Department of Design and Construction

THE CITY OF NEW YORK
DEPARTMENT OF DESIGN AND CONSTRUCTION
DIVISION OF INFRASTRUCTURE
30-30 THOMSON AVENUE
LONG ISLAND CITY, NY, 11101
TEL: 718.391.1000
WEB: www.nyc.gov/ddc

TO BE FILLED IN BY THE BIDDER:

BIDDER'S NAME:

_____

_____

BID SECURITY (CIRCLE ONE):
BID BOND / CERTIFIED CHECK

NUMBER OF ADDENDUMS RECEIVED AND ATTACHED TO BID:
____ ADDENDUMS

DDC CLIENT AGENCY:
NEW YORK CITY DEPARTMENT OF PARKS AND RECREATION
PREPARED BY:
AKRF / KSE JV
DATE PREPARED:
DECEMBER 16, 2020

VOLUME 1 OF 3
BID BOOKLET

FOR FURNISHING ALL LABOR AND MATERIALS NECESSARY AND REQUIRED FOR:

PROJECT ID: SANDRESM1

INSTALLATION OF EAST SIDE COASTAL RESILENCY FROM MONTGOMERY STREET TO EAST 15TH STREET

INCLUDING FLOOD PROTECTION SYSTEM, ROLLER AND SWING GATES, PARK RECONSTRUCTION, SEWER, PEDESTRIAN BRIDGES, PARK, BUILDINGS, GROUND IMPROVEMENT, STREET LIGHTING AND TRAFFIC WORK

TOGETHER WITH ALL WORK INCIDENTAL THERETO

BOROUGH OF MANHATTAN

CITY OF NEW YORK

HUD FUNDED

Department of Design and Construction

Jamie Torres-Springer
Commissioner

Rachel Laiserin
Chief Financial Officer
Finance and Procurement

Lorraine Holley
Deputy ACCO

Nicholas Mendoza
Agency Chief Contracting Officer

May 28, 2021

CERTIFIED MAIL - RETURN RECEIPT REQUEST
IPC RESILIENCY PARTNERS
1010 Northern Boulevard, Suite 200
Great Neck, NY 11021

RE: FMS ID: SANDRESM1
E-PIN: 85021B0024001
DDC PIN: 8502021RC0001C
INSTALLATION OF EAST SIDE COASTAL RESILENCY FROM MONTGOMERY STREET TO EAST 15TH STREET-BOROUGH OF MANHATTAN
NOTICE OF AWARD

Dear Contractor:

You are hereby awarded the above referenced contract based upon your bid in the amount of $1,272,221,100.00 submitted at the bid opening on February 08, 2021. Within ten (10) days of your receipt of this notice of award, you are required to take the actions set forth in Paragraphs (1) through (3) below. For your convenience, attached please find a copy of Schedule A of the General Conditions to the Contract, which sets forth the types and amounts of insurance coverage required for this contract.

(1) Execute two copies of the Agreement. Attached are the Signature Agreement pages which must be completed and returned to the agency. The Agreement must be signed by an officer of the corporation or a partner of the firm.

(2) Submit to the Contracts Unit two properly executed performance and payment bonds. If required for this contract, copies of performance and payment bonds are attached.

(3) Submit to the Contracts Unit the following insurance documentation: (a) original certificate of insurance for general liability in the amount required by Schedule A, and (b) original certificates of insurance or other proof of coverage for workers' compensation and disability benefits, as required by New York State Law. The insurance documentation specified in this paragraph is required for registration of the contract with the Comptroller's Office.

Department of Design and Construction

On or before the contract commencement date, you are required to submit all other certificates of insurance and/or policies in the types and amounts required by Schedule A. Such certificates of Insurance and/or policies must be submitted to the Agency Chief Contracting Office, Attention: Risk Manager, Fourth Floor at the above indicated department address.

Your attention is directed to the section of the Information for Bidders entitled "Failure to Execute Contract". As indicated in this section, in the event you fail to execute the contract and furnish the required bonds within the (10) days of your receipt of this notice of award, your bid security will be retained by the City and you will be liable for the difference between your bid price and the price for which the contract is subsequently awarded, less the amount of the bid security retained.

As of August 16, 2019, please be advised that Contract Site Safety Plans for DDC projects must be submitted through DDC's online Site Safety Plan (SSP) application (available via our Agency Portal – *DDC Anywhere*).

To create an account and begin your Site Safety Pan submission using SSP, click on the link below:

DDC Portal **https://ddcanywhere.nyc/Registration/Registration**

For questions regarding this web-based application, please contact DDC via email at: ddcservicedesk@ddc.nyc.gov.

Sincerely,

Lorraine Holley

Lorraine Holley

(NO TEXT ON THIS PAGE)

SPECIAL NOTICE TO BIDDERS

NEW BID SUBMISSION PROCEDURES DUE TO COVID-19

The bid submission and opening procedures for this contract will follow the procedures set forth below.

THE BIDDER MUST CAREFULLY READ THE DATES AND TIMES ON ATTACHMENT 1, AS THEY NOW DIFFER FROM PREVIOUS DDC PROJECTS.

Bid Submission Procedures

1. The representative delivering the bid must maintain required social distancing measures – keep at least 6 feet away from others, and a mask or face covering must be worn.
2. The representative delivering the bid must comply with the Covid daily health screening required to enter the DDC office building at 3030 Thomson Ave. The time required to complete this screening must be accounted for in order to submit the bid on time.

   As such, please allow sufficient time for these procedures when arriving to deliver the bid so that the bid may be submitted on time.

   The screening requirements are as follows:

   Any guest visiting DDC will be required to follow the same health and safety measures as DDC staff, which includes wearing a mask and completing the daily Health Screening.

   Upon your arrival to 3030 Thomson Ave, please complete the health screen at the kiosk located by the left hand side of the security desk upon your entry. You will need to provide your name, email address and answer a few questions. Once you complete the health screening, you will need to receive a Green Readiness Score to enter our offices. Should you receive a Red Readiness Score, you will not be allowed to enter our offices. These steps are in place to ensure all precautionary safety measures are followed while in the office, as the health and safety of staff and visitors is our number one priority.

   The health screening will follow the sample screening in the following link: https://www1.nyc.gov/assets/doh/downloads/pdf/imm/covid-19-symptom-screening-businesses.pdf

   The person dropping off the bid must be able to answer all four questions in the negative.

   If there are issues dropping off the bid, the bidder should email CSB_ProjectInquiries@ddc.nyc.gov for additional instructions.
3. All bids must be delivered by hand within the time shown on Attachment 1. No bids will be accepted by mail or parcel service (USPS, FedEx, UPS, DHL, etc.).

(revised 11/16/20)

4. Bid submissions must be in a single, sealed envelope and clearly labeled on the outside with the following:

    a. Project ID
    b. Project Name
    c. e-PIN no.
    d. Name of Contractor
    e. Contact person
    f. Email address
    g. Phone number

5. Bid submissions must not contain any staples or paper clips.
6. The ACCO staff will provide a time stamp sticker to be applied to the bid envelope.
7. Please use the link indicated on Attachment 1 to join the virtual bid opening.

NO FURTHER TEXT ON THIS PAGE

NOTICE TO BIDDERS 1

The Contractor is hereby notified that the City of New York has not finalized the property access arrangements within the following adjacent property limits:

1. Con Edison Building
2. East River Housing Corporation
3. Gouverneur Gardens Housing Corporation
4. New York City Housing Authority – Jacob Riis Houses

The City is proceeding to finalize all necessary property access arrangements including easement and access agreements. The Contractor must not commence any Work at these locations until directed by the Engineer. Upon direction, the Contractor must proceed with the components of the Project as directed and approved by the Engineer.

In the event that the necessary property access arrangements are not finalized for any reason, the City reserves the exclusive right to modify, alter and/or omit all or portions of the Work. No claim shall be made against the City for damages for delays or actions due to such alterations / modifications / omissions, as directed by the Engineer.

NOTICE TO BIDDERS 2

Pre-Bid Questions (PBQs)

Please be advised that PBQs should be submitted to the Agency Contact Person (CSB_projectinquiries@ddc.nyc.gov) by the date indicated in BID INFORMATION, page A-5 of this BID BOOKLET.

All PBQs must reference the Project ID. If a bidder has multiple PBQs for the same Project ID, the PBQs must be numbered sequentially, even if they are submitted separately.

NYC Contract Financing Loan Fund

Loans at a 3% annual interest rate to perform on New York City contracts

If your business is working as a prime or subcontractor on a project with a City agency or City-funded entity, you may be eligible for a Contract Financing Loan from a participating lender coordinated with the NYC Department of Small Business Services (SBS). Loan repayment terms align with the contract payment schedule.

Loans of up to $500,000 at an annual interest rate of 3% are available to eligible* businesses to perform on New York City contracts. Closing fees apply.

*To be eligible for a loan, you must:

- ✓ Have an operating business, AND
- ✓ Be applying for financing as a prime or sub-contractor to use toward a contract with a City agency or City-funded entity.
- ✓ Additional Eligibility requirements may also apply.

How it works:
Step 1: Fill out the Contract Financing inquiry form at nyc.gov/contractfinancing
Step 2: If Eligible, a participating lender will contact you within two business days.
Step 3: Begin the loan application process

For more information: **Call 311** or visit **nyc.gov/contractfinancing**

(NO FURTHER TEXT ON THIS PAGE)

NYC Bond Collateral Assistance Fund

If your business is bidding or planning to bid on a project as a prime or subcontractor with a City agency or the NYC Economic Development Corporation (NYCEDC) and the project requires surety bonding, you may be eligible* to receive **up to $500,000 in Collateral Assistance to enhance your surety bond application** from a participating bond service provider coordinated with the NYC Department of Small Business Services (SBS).

*To be eligible, you must:

- ✓ Have an operating construction business, AND
- ✓ Be bidding or planning to bid **as a prime or subcontractor** on a contract with a City agency or NYCEDC that requires bonding
- ✓ Additional Eligiblity requirements may apply.

How it works:
Step 1: Fill out the Bond Collateral Assistance Fund inquiry form at nyc.gov/bondfund
Step 2: If Eligible, the bond service provider will contact you within two business days
Step 3: Begin the bond application process

For more information: **Call 311** or visit **nyc.gov/bondfund**

(NO FURTHER TEXT ON THIS PAGE)

NOTICE TO BIDDERS 3

In order to expedite the processing of bid submissions, all bidders must submit a Microsoft Excel file with the Bid Schedule (B-Pages) data, as described below.

The Microsoft Excel file must be sent by email to CSB_projectinquiries@ddc.nyc.gov within 24 hours **AFTER THE BID OPENING.**

Required formatting:

1. File type: Microsoft Excel (.xlsx)
2. Columns:
    A. SEQ. NO.
    B. ITEM NUMBER
    C. UNIT PRICE
    D. EXTENDED AMOUNT
3. Rows: 1 per bid item. Row 1 must be a header row with the column names listed above.
4. Page numbers, headers or footers, and attempts to perfectly mimic the DDC Bid Schedule form are not necessary.

The Microsoft Excel file will be used to expedite the processing of bids and bid analysis.

All bidders who submit a bid, regardless of rank, must submit a Microsoft Excel Bid Schedule file.

The paper copy submitted on the Bid Submission date will govern in case of a discrepancy.

(NO FURTHER TEXT ON THIS PAGE)

NOTICE TO BIDDERS 4

The bidder's attention is drawn to Volume 3, S-Pages, Article B18 – Information from Previous Advertisement.

(NO FURTHER TEXT ON THIS PAGE)

NOTICE TO BIDDERS 5

DOT PERMIT STIPULATIONS

(a) For BIOSW1

• If a NYC DEP Right of Way Green Infrastructure practice is located in the roadway and/or sidewalk, permittee must contact NYC DEP 48 business hours before construction starts at: giutility@dep.nyc.gov or call 718-595-7599; for further instruction on how to proceed. Also, the Permittee must follow NYC DEPs Green infrastructure protection requirements at: https://www1.nyc.gov/site/dep/water/green-infrastructure.page.
Permittee is responsible for restoration, replacement, or reconstruction of damaged DEP Green Infrastructure assets impacted by the Permittee as directed by DEP.

(b) For PERMPV

• If NYC DEP Permeable Pavement is located in the roadway and/or sidewalk, permittee must contact NYC DEP 48 business hours before construction starts at: giutility@dep.nyc.gov or call 718-595-7599 for further instruction on how to proceed. Also, the permittee must follow NYC DEP Green infrastructure a protection requirement available at: https://www1.nyc.gov/site/dep/water/green-infrastructure.page.
Permittee is responsible for restoration, replacement or reconstruction of damaged DEP Green Infrastructure assets impacted by the Permittee as directed by DEP.

CITY OF NEW YORK
DEPARTMENT OF DESIGN AND CONSTRUCTION
DIVISION OF INFRASTRUCTURE

TABLE OF CONTENTS

SPECIAL NOTICE TO BIDDERS i
NOTICE TO BIDDERS 1 iii
NOTICE TO BIDDERS 2 iv
NOTICE TO BIDDERS 3 vi
NOTICE TO BIDDERS 4 vii
NOTICE TO BIDDERS 5 viii
TABLE OF CONTENTS ix
A. BID BOOKLET A-1
BID INFORMATION A-1
SPECIAL NOTICE TO BIDDERS A-3
BID INFORMATION (ATTACHMENT 1) A-5
SPECIAL EXPERIENCE REQUIREMENTS A-7
M/WBE PROGRAM: M/WBE UTILIZATION PLAN A-17
PRE-AWARD PROCESS A-25
PASSPort COMPLIANCE A-27
CONSTRUCTION EMPLOYMENT REPORT A-27
REQUIRED FORMS A-29
BID FORM A-31
AFFIRMATION A-36
BID BONDS A-37
QUALIFICATION FORM A-41
SCHEDULE B: M/WBE UTILIZATION PLAN A-45
PROJECT REFERENCE FORMS A-53
SAFETY QUESTIONNAIRE A-57
IRAN DIVESTMENT ACT COMPLIANCE RIDER A-61
B. BID SCHEDULE (B-PAGES) B-1
BID SCHEDULE B-3
C. DRAWINGS C-1
Contract Drawings C-1
Standard Drawings C-100

(NO TEXT ON THIS PAGE)

CITY OF NEW YORK
DEPARTMENT OF DESIGN AND CONSTRUCTION
DIVISION OF INFRASTRUCTURE

A. BID BOOKLET

BID INFORMATION

(NO TEXT ON THIS PAGE)

SPECIAL NOTICE TO BIDDERS

BID SUBMISSION REQUIREMENTS

THE FOLLOWING DOCUMENTS ARE TO BE COMPLETED AND SUBMITTED WITH THE BID:

(1) Bid Schedule (Page B-3)
(2) Bid Form, including Affirmation (Page A-31)
(3) Bid Security (if required, see Bid Information on Page A-5)
(4) Schedule B: M/WBE Utilization Plan (Page A-45, if participation goals have been established)

FAILURE TO SUBMIT THE ITEMS LISTED ABOVE WILL RESULT IN THE DISQUALIFICATION OF THE BID.

(5) Bidder's Certification of Compliance with Iran Divestment Act (Page A-61)
(6) Special Experience Requirements (Page A-7 to A-14, if applicable)
(7) Apprenticeship Program Requirements (Page A-47, if applicable)
(8) Safety Questionnaire (Page A-57)
(9) Construction Employment Report (Page A-27 if bid is $1,000,000 or more)
(10) Any addenda issued prior to the receipt of bids

FAILURE TO SUBMIT THE ITEMS LISTED ABOVE MAY RESULT IN THE DISQUALIFICATION OF THE BID.

NOTES:

(1) All of the above referred to blank forms to be completed and submitted with the bid are included in the BID BOOKLET, page numbers as noted above.

(2) If the bidder has any questions or requires additional information, please contact the Agency Contact Person noted on Attachment 1 (Page A-5 of this Bid Booklet).

(3) PASSPort Compliance: The Bidder is advised that Vendex Questionnaires and procedures have been replaced by the PASSPort system. Compliance with PASSPort is mandatory for contract Award. PASSPort details are set forth on Page A-27 of this Bid Booklet.

(4) SPECIAL EXPERIENCE REQUIREMENTS: The Bidder is advised that Special Experience Requirements may apply to this contract. Such requirements are set forth beginning on Page A-7 of this Bid Booklet.

(NO TEXT ON THIS PAGE)

BID INFORMATION (ATTACHMENT 1)

PROJECT ID: SANDRESM1
PIN: 8502021RC0001C

Description and Location of Work:

INSTALLATION OF EAST SIDE COASTAL RESILENCY FROM MONTGOMERY STREET TO EAST 15TH STREET
Together With All Work Incidental Thereto
BOROUGH OF MANHATTAN
CITY OF NEW YORK

Documents Available: Online at https://biddocuments.ddcanywhere.nyc/

Submission of Bids to: 30-30 Thomson Avenue
First Floor Bid Procurement Room
Long Island City, New York 11101
Between **8:30 AM and 11:00 AM** on **February 8, 2021**

Bid Opening: Live web video stream:
https://us02web.zoom.us/j/83497297968?pwd=UHFQbk9LM2RBUWduZWNmR0l2Zzh3Zz09
Time and Date: **11:30 AM** on **February 8, 2021**

Pre-Bid Conference: Yes: **X** No: ____
If Yes, Mandatory: __ Optional: **X**
Time and Date **10:00 AM** on **January 4, 2021**
Location: **via the conferencing application Zoom**
https://us02web.zoom.us/j/85876557246?pwd=Tkd2ODhoRTFmYnovYitlQU0rL0F3QT09

Bid Security: Bid Security is required in the amount set forth below; provided, however, bid security is not required if the TOTAL BID PRICE set forth on the Bid Form is less than $ 1,000,000.00.
(1) Bond in an amount not less than 10% of the TOTAL BID PRICE set forth on the Bid Form, OR
(2) Certified Check in an amount not less than 2% of the TOTAL BID PRICE set forth on the Bid Form.

Performance and Payment Security: Required for contracts in the amount of $1,000,000 or more. Securities shall be in amounts as follows:
(1) Performance Security: equal to 50% of the Contract Price
(2) Payment Security: equal to 100% of the Contract Price.

Agency Contact Person: Lorraine Holley
Phone: 718-391-2601 , Fax 718-391-2627
Email: CSB_projectinquiries@ddc.nyc.gov

Pre-Bid Questions: Pre-Bid Questions are due by **8:00 AM** on **January 19, 2021**



For questions about site accessibility, please contact our disability services facilitator at (718) 391-2815 or via email at accessibility@ddc.nyc.gov.

(NO TEXT ON THIS PAGE)

SPECIAL EXPERIENCE REQUIREMENTS

(A) SPECIAL EXPERIENCE REQUIREMENTS FOR THE BIDDER:

The Special Experience Requirements set forth below apply to the bidder. Compliance with such Special Experience Requirements will be determined solely by the City prior to an award of contract. Failure to comply with the Special Experience Requirements will result in rejection of the bid as non-responsive.

The requirements in this Section (A) apply to this contract where indicated by a blackened box (■).

■ The bidder must, within the past consecutive six (6) years have successfully completed at least (3) projects involving specialty work from the list below:

1.) Flood wall and flood gate construction, including:
   a.) Press-in sheet piling
   b.) Micropiling
   c.) Drilled shafts
   d.) Rock sockets
   e.) Jet grouting
2.) Combined sewer structure (regulator, manhole, tide gate) reconstruction
3.) Marine construction, including:
   a.) Pile supported pre-stressed concrete deck structure demolition and reconstruction
   b.) Cut-off wall installation
   c.) Outfall penetration installation
   d.) Cathodic protection of existing steel pipe piles
   e.) Marine Concrete and mass fill delivery
4.) Heavy movable mechanisms –Roller flood gates
5.) Prefabricated pedestrian bridge construction and installation
6.) Soil contamination remediation
7.) Ground improvement
8.) Archaeological investigation work
9.) Large-scale landscape construction, including:
   a.) Plantings
   b.) Horticultural soils
   c.) Green roofs
10.) Natural and synthetic turf sports field construction
11.) Specialty athletic surfacing, including:
   a.) Tennis courts
   b.) Running track
12.) Irrigation system installation
13.) Concrete flatwork, including exposed aggregate specialty work
14.) Stone masonry
15.) Architectural precast concrete
16.) Architectural metal work
17.) Playground construction
18.) Park building construction including all standard building trades

Such prior projects may have been performed as a prime contractor, subcontractor or sub-subcontractor.

■ The bidder must, within the last ten (10) consecutive years prior to the bid opening, have successfully completed in a timely fashion at least two (2) projects with a construction value greater than $400,000,000 for each individual project. The experience of Bidder's principal(s) may be used to fulfill the above experience requirements.

■ The bidder must have had at least One Billion ($1,000,000,000) in annual gross revenue for the prior fiscal year resulting from general construction work and specialty engineering work.

The Special Experience Requirements next to the blackened box below apply to the bidder. If the bidder intends to perform such work itself, it must demonstrate compliance with the Special Experience Requirements. If the bidder intends to subcontract this work, the proposed subcontractor or sub-subcontractor must demonstrate compliance with the Special Experience Requirements. The contractor, subcontractor or sub-subcontractor (hereinafter referred to as the "Entity") that will perform any specific area of work indicated by the blackened box below, may have performed the required prior project(s) as a prime contractor, subcontractor or sub-subcontractor. Once approved, no substitution will be permitted, unless the qualifications of the proposed replacement have been approved in writing in advance by the City.

☐ **Trunk Water Main Work:** The Entity that will perform the trunk water main work must, within the last seven (7) consecutive years prior to the bid opening, have successfully completed in a timely fashion at least one (1) project similar in scope and type to the required work.

☐ **Best Management Practice Work:** Best Management Practice ("BMP") Work is any item of work in the Bid Schedule that begins with the prefix "BMP". The Entity that will perform any BMP Work must, within the last five (5) consecutive years prior to the bid opening, have successfully completed in a timely fashion at least three (3) projects similar in scope and type to the required work.

For professional services in connection with BMP Work (i.e., monitoring and reporting services), the individual who will perform the required services must, within the last five (5) consecutive years prior to the bid opening, have successfully completed in a timely fashion at least three (3) projects similar in scope and type to the required work. Additional requirements are set forth below.

- ☐ The individual serving as the Restoration Specialist (Construction Monitor) must be a Registered Landscape Architect licensed by the state of New York, or must have equivalent professional experience.
- ☐ The individual serving as the Erosion and Sediment Control Licensed/Certified Professional must be a Certified Professional in Erosion and Sediment Control (CPESC), certified by CPESC, Inc.

☐ **Micro-Tunneling/Pipe Jacking Work:** The Entity that will perform the micro-tunneling/pipe jacking work must, within the last five (5) consecutive years prior to the bid opening, have successfully completed in a timely fashion at least two (2) projects similar in scope and type to the required work.

☐ **OTHER:** _____

_____

(B) <u>SPECIAL EXPERIENCE REQUIREMENTS FOR SPECIFIC AREAS OF WORK</u>:

The requirements in this Section (B) apply to this contract where indicated by a blackened box (■).

The Special Experience Requirements set forth below apply to the Entity that will perform the specific area of work. **<u>Compliance with such Special Experience Requirements will be determined solely by the City after an award of contract</u>. <u>Within two (2) weeks of award of contract, the contractor will be required to submit the qualifications of the Entity that will perform the specific area of work.</u>** If the bidder intends to perform such work itself, it must demonstrate compliance with the Special Experience Requirements. If the bidder intends to subcontract this work, the proposed subcontractor or sub-subcontractor must demonstrate compliance with the Special Experience Requirements. Once approved, no substitution will be

permitted, unless the qualifications of the proposed replacement have been approved in writing in advance by the City.

Special Experience Requirements apply to the Entity that will perform any specific area of work indicated by a blackened box. The Entity may have performed the required prior project(s) as a prime contractor, subcontractor or sub-subcontractor.

■ **Hazmat Work:** Hazmat Work is any item of work in the Bid Schedule that begins with the prefix 8.01. The Entity that will perform any Hazmat Work must, within the last three (3) consecutive years prior to the bid opening, have successfully completed in a timely fashion at least five (5) projects similar in scope and type to the required work.

■ **Pile and/or CFA Pile Work:** The Entity that will perform the Pile and/or CFA Pile Work must, within the last three (3) consecutive years prior to the bid opening, have successfully completed in a timely fashion at least two (2) projects similar in scope and type to the required work.

For professional services in connection with Pile Work (i.e., engineering and inspection services), the individual who will perform the required services must be a Professional Engineer licensed by the state of New York. Such individual must also comply with the above requirements for prior projects.

■ **Construction Report, Monitoring and Post-Construction Report, and Continuous Real-Time Monitoring For Vibrations and Movements and Post-Construction Report Work:** The Entity that will perform the Construction Report, Monitoring For Vibrations And Movements, and Post-Construction Report Work must, within the last three (3) consecutive years prior to the bid opening, have successfully completed in a timely fashion at least two (2) projects similar in scope and type to the required work.

For professional services in connection with Reporting and Monitoring Work (i.e., engineering and inspection services), the individual who will perform the required services must be a Professional Engineer licensed by the state of New York. Such individual must also comply with the above requirements for prior projects.

■ **OTHER (by specification section):**

1. GENERAL-Pages, Section ESCR 9.30: Qualified Inspector - Professional Engineer or a Landscape Architect licensed to practice in New York State, or a Soil and Water Conservation Society Certified Professional in Erosion and Sediment Control (CPESC) who is independent from the Contractor.
2. FLOODWALL-Pages, Section ESCR 13: Entity performing architectural concrete textured finishes: five (5) years' experience and three (3) projects of similar magnitude and complexity to the required work.
3. PARKS-Pages, Section PK-ESCR 099: Entity performing play equipment: The Entity to perform the installation work must have a minimum of three (3) years of experience working on installation of play equipment similar to the work specified in scope and complexity in accordance with ASTM F1487-Latest Rev. and CPSC guidelines.
4. PARKS-Pages, Section PK-ESCR 036: Fabricator Qualifications: A firm with a minimum of twenty-five (25) years documented experience in the production of decorative architectural precast concrete units similar to those indicated for this project and with a record of successful in-service performance. Fabricator to have minimum seven (7) years' experience with Rhino computer modeling, 3D CNC modeling and machining.
5. PARKS-Pages, Section PK-ESCR 036: Precast installer have no less than 5 years of documented experiences who has completed precast architectural concrete work similar in material, design, and extent to that indicated for this Project and whose work has resulted in construction with a record of successful in-service performance

6. PARKS-Pages, Section PK-ESCR 110: The entity performing the plant installation shall be experienced in plant installation comparable to that described herein and have at least ten (10) years of prior experience in plant installation.
7. PARKS-Pages, Section PK-ESCR 111: Synthetic turf installer: have successfully completed in a timely fashion at least five (5) projects similar in scope and type to the required work.
8. PARKS-Pages, Section PK-ESCR 468/469: The VMS Manufacturer must have a minimum of ten (10) years manufacturing LED DMS for ITS application, must be certified for the latest ISO 9001 standards and must have a minimum of 100 outdoor LED DMS. VMS installations currently in operation by similar Transportation agencies in the U.S.
9. PARKS-Pages, Section PK-ESCR 603: The enclosure manufacturer shall be a company specializing in the manufacturing of such enclosures with at least fifteen (15) years of successful field experience and be A.S.S.E. 1060 Seal Certified.
10. PARKS-Pages, Sections PK-ESCR 653, PK-ESCR 654: Solar Energy Electrical Power Generation System installer(s) must demonstrate that they have successfully installed at least four projects within the past five (5) years that, in aggregate, equal or exceed the size of the proposed project. References shall be provided for each of the referenced qualified projects.
11. PARKS-Pages, Section PK-ESCR 907: The fabricator must be experienced in the production and installation of stainless steel furnishings and/or site amenities for a minimum of five (5) years.
12. BRIDGES-Pages, SECTION 564.02010211: The hanger supplier must have a representative on site full time during all such operations. The representative shall have previous experience with strand-by-strand installation of hangers/stay cables of similar or larger size on at least two other projects within the previous five (5) years.
13. BRIDGES-Pages, SECTION 572.0002NN01: The metalizing contractor performing the work shall document previous experience in providing surface preparation for metalizing and metalizing application services in the shop and field, with a minimum history of three (3) successfully completed projects of similar complexity. The contractor shall be certified per the requirements of SSPC-QP 3.
14. BRIDGES-Pages, SECTION NYC-180002: The Manufacturer shall have successfully completed at least five (5) projects within the past 3 years of similar size, complexity, and utilizing similar systems
15. BRIDGES-Pages, SECTION ESCR 570: The contractor or subcontractor performing the anti-graffiti coating of this section must, within the last five (5) consecutive years prior to the bid opening have successfully completed in a timely fashion at least three (3) projects similar in scope, size and type to the required work. In addition, the contractor or subcontractor must be approved, or certified, or authorized by the manufacturer, and must be eligible to receive the manufacturer's warranty.
16. BUILDINGS-Pages SECTION 05 80 00: The entity performing the work of this section must, within the last five (5) consecutive years prior to the bid opening have successfully completed in a timely fashion at least three (3) projects similar in scope, size and type to the required work.
17. BUILDINGS-Pages SECTION 07 13 00: The entity performing the work of this section must, within the last five (5) consecutive years prior to the bid opening have successfully completed in a timely fashion at least three (3) projects similar in scope, size and type to the required work

18. BUILDINGS-Pages SECTION 07 27 10 Applicator Qualifications: A firm experienced in applying air vapor barrier materials similar in material, design, and extent to those indicated for this Project, whose work has resulted in applications with a record of successful in-service performance.
19. BUILDINGS-Pages SECTION 07 27 10 Membrane Manufacturer Qualifications: The fabricator/manufacturer shall must, for the past five (5) years, have been regularly engaged in the manufacture of material or equipment similar in type to that required for this Project.
20. BUILDINGS-Pages SECTION 07 55 56 A Qualified Installer: The entity performing the work of this section must, within the last five (5) consecutive years prior to the bid opening have successfully completed in a timely fashion at least three (3) projects similar in scope, size and type to the required work
21. BUILDINGS-Pages SECTION 07 55 66 Qualified Installer: The entity performing the work of this section must, within the last five (5) consecutive years prior to the bid opening have successfully completed in a timely fashion at least three (3) projects similar in scope, size and type to the required work
22. BUILDINGS-Pages SECTION 07 55 66: The fabricator/manufacturer shall must, for the past five (5) years, have been regularly engaged in the manufacture of material or equipment similar in type to that required for this Project
23. BUILDINGS-Pages Section 07 62 00 Qualified Installer: The entity performing the work of this section must, within the last five (5) consecutive years prior to the bid opening have successfully completed in a timely fashion at least three (3) projects similar in scope, size and type to the required work.
24. BUILDINGS-Pages SECTION 07 70 00: The fabricator/manufacturer shall must, for the past five (5) years, have been regularly engaged in the manufacture of material or equipment similar in type to that required for this Project.
25. BUILDINGS-Pages SECTION 07 70 00 Qualified Installer: The entity performing the work of this section must, within the last five (5) consecutive years prior to the bid opening have successfully completed in a timely fashion at least three (3) projects similar in scope, size and type to the required work.
26. BUILDINGS-Pages Section 07 92 00 Installer/Applicator: The sealant work shall be performed by a firm having five (5) years experience in the installation of specified materials on comparable projects. The firm shall have the approval of the sealant materials manufacturer
27. BUILDINGS-Pages Section 08 31 00 Qualified Installer: The entity performing the work of this section must, within the last five (5) consecutive years prior to the bid opening have successfully completed in a timely fashion at least three (3) projects similar in scope, size and type to the required work
28. BUILDINGS-Pages Section 08 31 00 B.Manufacturer Qualifications: The fabricator/manufacturer shall must, for the past five (5) years, have been regularly engaged in the manufacture of material or equipment similar in type to that required for this Project
29. BUILDINGS-Pages Section 08 33 00 Qualified Installer: The entity performing the work of this section must, within the last five (5) consecutive years prior to the bid opening have successfully completed in a timely fashion at least three (3) projects similar in scope, size and type to the required work.
30. BUILDINGS-Pages Section 08 33 00: The fabricator/manufacturer shall must, for the past five (5) years, have been regularly engaged in the manufacture of material or equipment similar in type to that required for this Project.

31. BUILDINGS-Pages SECTION 08 33 23: Qualified Installer: The entity performing the work of this section must, within the last five (5) consecutive years prior to the bid opening have successfully completed in a timely fashion at least three (3) projects similar in scope, size and type to the required work.
32. BUILDINGS-Pages SECTION 08 33 23: The fabricator/manufacturer shall must, for the past five (5) years, have been regularly engaged in the manufacture of material or equipment similar in type to that required for this Project
33. BUILDINGS-Pages SECTION 08 51 13: Qualified Installer: The entity performing the work of this section must, within the last five (5) consecutive years prior to the bid opening have successfully completed in a timely fashion at least three (3) projects similar in scope, size and type to the required work.
34. BUILDINGS-Pages SECTION 08 80 00: D. Low 'E' Coating Producer: The fabricator/manufacturer shall must, for the past five (5) years, have been regularly engaged in the manufacture of material or equipment similar in type to that required for this Project.
35. BUILDINGS-Pages SECTION 09 21 17 Installer Qualifications: The entity performing the work of this section must, within the last five (5) consecutive years prior to the bid opening have successfully completed in a timely fashion at least three (3) projects similar in scope, size and type to the required work.
36. BUILDINGS-Pages SECTION 09 67 00: Obtain primary fluid applied flooring materials including primers, resins, waterproofing membranes, hardening agents, finish or sealing coats from a single manufacturer with not less than five (5) years of successful experience in supplying principal materials for work of type and extent shown and described in this section
37. BUILDINGS-Pages SECTION 09 67 00 Installer: The entity performing the work of this section must, within the last five (5) consecutive years prior to the bid opening have successfully completed in a timely fashion at least three (3) projects similar in scope, size and type to the required work.
38. BUILDINGS-Pages SECTION 09 90 00 Applicator Qualifications: The entity performing the work of this section must, within the last five (5) consecutive years prior to the bid opening have successfully completed in a timely fashion at least three (3) projects similar in scope, size and type to the required work
39. BUILDINGS-Pages SECTION 10 14 00: The entity performing the work of this section must, within the last five (5) consecutive years prior to the bid opening have successfully completed in a timely fashion at least three (3) projects similar in scope, size and type to the required work.
40. BUILDINGS-Pages SECTION 10 14 00 Qualified Installer: The entity performing the work of this section must, within the last five (5) consecutive years prior to the bid opening have successfully completed in a timely fashion at least three (3) projects similar in scope, size and type to the required work
41. BUILDINGS-Pages Section 10 16 00 Qualified Installer: The entity performing the work of this section must, within the last five (5) consecutive years prior to the bid opening have successfully completed in a timely fashion at least three (3) projects similar in scope, size and type to the required work.
42. BUILDINGS-Pages Section 10 16 00: The manufacturer providing material or equipment specified in this section must, for the past five (5) years, have been regularly engaged in the manufacture of material or equipment similar in type to that required for this Project
43. BUILDINGS-Pages SECTION 10 28 13 Qualified Installer: The entity performing the work of this section must, within the last five (5) consecutive years prior to the bid

opening have successfully completed in a timely fashion at least three (3) projects similar in scope, size and type to the required work.

44. BUILDINGS-Pages SECTION 10 44 00 Qualified Installer: The entity performing the work of this section must, within the last five (5) consecutive years prior to the bid opening have successfully completed in a timely fashion at least three (3) projects similar in scope, size and type to the required work.
45. BUILDINGS-Pages SECTION 10 51 13 Qualified Installer: The entity performing the work of this section must, within the last five (5) consecutive years prior to the bid opening have successfully completed in a timely fashion at least three (3) projects similar in scope, size and type to the required work.
46. BUILDINGS-Pages SECTION 13 34 70 Qualified Applicator: The entity performing the anti-graffiti coating of this section must, within the last five (5) consecutive years prior to the bid opening have successfully completed in a timely fashion at least three (3) projects similar in scope, size and type to the required work
47. BUILDINGS-Pages SECTION 28 46 00: The manufacturer providing material or equipment specified in this section must, for the past five (5) years, have been regularly engaged in the manufacture of material or equipment similar in type to that required for this Project.
48. BUILDINGS-Pages SECTION 23 0593: Indoor Air Quality (IAQ) Testing: The testing and balancing agency shall provide proof of having at least 3 years testing experience, as well as having successfully completed at least three (3) projects of similar size and scope.
49. BUILDINGS-Pages SECTION 32 31 10 Qualified Installer: The entity performing the work of this section must, within the last five (5) consecutive years prior to the bid opening have successfully completed in a timely fashion at least three (3) projects similar in scope, size and type to the required work.
50. BUILDINGS-Pages SECTION 32 31 10: The manufacturer must, for the past five (5) years, have been regularly engaged in the manufacture of material or equipment similar in type to that required for this Project
51. PC-Pages SECTION ESCR 50.61 Equipment: The microtunnel boring machine (MTBM) must be a pressurized face, slurry machine manufactured by a company that specializes in the design and fabrication of this type of equipment and has at least ten (10) years of experience.
52. PC-Pages SECTION ESCR 50.61 Qualifications: The microtunneling/pipe-jacking Contractor or subcontractor performing the work required under this contract must be experienced in work of this nature and must have successfully completed a minimum of two (2) tunneling projects in the last five (5) years using pressurized face microtunneling/pipe-jacking equipment with a closed face tunnel shield and positive controlled face pressure. One of the successfully completed projects must have been in similar ground conditions (strata type and hydrostatic head), as to those anticipated on this contract. The Contractor must submit a description of such projects, which must include at a minimum, a listing of the locations, dates of projects, owners, pipe types and sizes, type of equipment utilized, ground conditions, drive lengths, maximum line and grade deviations and other information relevant to the issue of the successful completion of such projects.

    The microtunneling/pipe-jacking project superintendent must have at least five (5) years of recent previous experience in tunneling using the proposed MTBM equipment. Experience shall be in a minimum of five (5) previous tunneling projects of similar size, drive lengths and ground conditions with at least two (2) projects with a minimum size of 48-inch diameter. Tunneling operations shall be performed under the direction of

tunneling supervisor who shall be in responsible charge throughout the tunneling operation .

The microtunneling/pipe-jacking machine operator(s) must be experienced in tunneling with prior knowledge and ability to properly operate the MTBM systems being employed. All operators shall have minimum of five (5) years of experience performing tunneling of similar size, drive lengths and ground conditions with at least two (2) projects with a minimum 48-inch diameter.

Prior to the start of work the Contractor will be required to submit the name and resume of the microtunneling/pipe-jacking subcontractor for approval.

53. FLOODWALL Pages Section ESCR-2: The entity performing the jet grouting shall be experienced in jet grouting operations comparable to that described herein and have at least five (5) years of experience in jet grouting methods. Jet grouting experience shall include at least 5 projects of similar magnitude and complexity to that required for the program specified herein.

54. FLOODWALL Pages Section ESCR-2: The jet grouting field superintendents shall each have at least five (5) years of experience in jet grouting techniques similar to that required for the Work; including at least 2 projects, one of which within the past 5 years of similar magnitude and complexity to that required for the Work.

55. FLOODWALL Pages Section ESCR-5: Identify full-time stone column equipment operators who have been directly responsible for stone column installation for at least 5 projects in the last five (5) years. Provide a detailed resume of the equipment operator's experience and qualifications.

56. FLOODWALL Pages SECTION ESCR-13: The work of this section shall be performed by a concrete contractor who specializes in the type of finish work required for this project, with a minimum of five years documented successful experience and shall be performed by skilled workers thoroughly trained in the necessary trades to perform the work. Prior to commencing with the work, the contractor shall submit resumes, references, and photographs/locations of prior work examples of textured finish concrete surfaces for approval by the Engineer

57. FLOODWALL Pages Section ESCR-76.11: The Contractor shall submit to the Commissioner qualifications of the firm it proposes to provide the engineering services described in this section. The proposed firm must meet the following special experience requirements.

    (1) Such firm must, within the last three (3) consecutive years, have successfully provided engineering services similar to the services described in this section on a minimum of two (2) comparable projects.

    (2) Such firm must carry professional liability insurance as specified in Schedule "A". Compliance with such special experience requirements will be determined solely by the Commissioner. Once a firm is approved, no substitution will be permitted, unless the Commissioner has approved the qualifications of the proposed replacement in writing in advance. If the qualifications of the proposed firm are not acceptable, the Contractor shall submit the qualifications of another proposed firm within fifteen (15) days of notice to do so.

58. FLOODWALL Pages Section ESCR-76.21: The Contractor shall submit to the Commissioner qualifications of the firm it proposes to provide the engineering services described in this section. The proposed firm must meet the following special experience requirements:

    (1) Such firm must, within the last three (3) consecutive years, have successfully provided engineering services similar to the services described in this section on a minimum of two (2) comparable projects.

    (2) Such firm must carry professional liability insurance as specified in Schedule "A".

    Compliance with such special experience requirements will be determined solely by the Commissioner. Once a firm is approved, no substitution will be permitted, unless the Commissioner has approved the qualifications of the proposed replacement in writing in advance. If the qualifications of the proposed firm are not acceptable, the Contractor shall submit the qualifications of another proposed firm within fifteen (15) days of notice to do so.

    The firm approved for the preparation of the preconstruction report(s) in accordance with Section ESCR-76.11 - Construction Report, may also be submitted for approval to perform the monitoring and post- construction report work.

59. FLOODWALL Pages SECTION ESCR-551.993: The Contractor shall be fully experienced in all aspects of micropile design and construction, and shall furnish all necessary equipment, materials, skilled labor, and supervision to carry out the contract. The Contractor shall have successfully completed at least three projects in the previous five (5) years of similar scope and size. The Contractor shall have successfully installed a minimum of 100 micropiles in similar sites, of similar capacity to those required in the plans and specifications. The Contractor shall also provide resumes of key personnel who will be present on site (and will be materially involved) and who each have at least three (3) years of relevant experience. These personnel shall include as a minimum a superintendent and a driller. The Engineer may suspend the Work if the Contractor uses non-approved personnel. If work is suspended, the Contractor shall be fully liable for all resulting costs and no adjustment in contract time will result from the suspension.

    For professional services in connection with Pile Work (i.e., engineering and inspection services), the individual who will perform the required services must be a Professional Engineer licensed by the state of New York. Such individual must also comply with the above requirements for prior projects.

60. S-Pages, Article B1, Critical Path Method (CPM) Schedule: Project Scheduler: must have a minimum of five (5) years relevant experience in the use of Oracle P6 and a minimum of five (5) years relevant experience in construction, planning, scheduling, expediting and tracking the progress of the work for projects of a similar nature, size, and complexity.

61. S-Pages, Article B3, Special Conditions for Maritime, Waterfront, and Floating Plants: Marine Surveyors: Must be accredited by the National Association of Marine Surveyors (NAMS) or the Society of Accredited Marine Surveyors (SAMS) and have at least 5 years of experience in commercial marine plant and equipment.

62. PARKS-Pages: PK-ESCR 781,782,783,784: Fiber Technicians must have a minimum of five (5) years experience in the installation of fiber optic cables, including fusion splicing, terminating and testing of single mode outside plant fibers.

(C) **<u>SPECIFICATIONS</u>:** In the event of any conflict, omission or inconsistency between (1) the Specifications and/or Contract Drawings, and (2) the Special Experience Requirements in Section (B) of the Special Notice to Bidders, the special experience listed in the

Specifications and/or Contract Drawings shall be controlling. The Special Experience Requirements in Section (B) of this Special Notice to Bidders are only for the convenience of the bidders.

M/WBE PROGRAM: M/WBE UTILIZATION PLAN

M/WBE Program Requirements: The requirements for the M/WBE Program are set forth on the following pages of this Bid Booklet, in the section entitled "Notice to All Prospective Contractors."

Schedule B: M/WBE Utilization Plan: The M/WBE Utilization Plan for this Contract is set forth in this Bid Booklet starting on page A-37. The M/WBE Utilization Plan (Part I) indicates whether Participation Goals have been established for this Contract. If Participation Goals have been established for this Contract, the bidder must submit an M/WBE Utilization Plan (Part II) with its bid.

Waiver: The bidder may seek a full or partial pre-award waiver of the Participation Goals in accordance with the "Notice to All Prospective Contractors" (See Part A, Section 10). The bidder's request for a waiver must be submitted at least seven (7) calendar days prior to the bid date. Waiver requests submitted after the deadline will not be considered. The form for requesting a waiver of the Participation Goals is set forth in the M/WBE Utilization Plan (Part III).

Rejection of the Bid: The bidder must complete Schedule B: M/WBE Utilization Plan (Part II) set forth in this Bid Booklet starting on page A-39.

The bidder's submission of Schedule B must include both the Vendor Certification and Required Affirmations (see Section V of Part II). If the bidder does not provide a complete Schedule B submission at the time of bid, the Agency will deem the bid to be non-responsive, unless a full waiver of the Participation Goals is granted (Schedule B, Part III). In the event that the City determines that the bidder has submitted a Schedule B where the Vendor Certification and Required Affirmations are completed but other aspects of the Schedule B are not complete, or contain a copy or computation error that is at odds with the Vendor Certification and Required Affirmations, the bidder will be notified by the Agency and will be given four (4) calendar days from receipt of notification to cure the specified deficiencies and return a completed Schedule B to the Agency. Failure to do so will result in a determination that the Bid is non-responsive. Receipt of notification is defined as the date notice is emailed or faxed (if the bidder has provided an email address or fax number), or no later than five (5) calendar days from the date of mailing or upon delivery, if delivered.

Impact on LBE Requirements: If Participation Goals have been established for the participation of M/WBEs, the contractor is not required to comply with the Locally Based Enterprise Program ("LBE"). The LBE Program's requirements are set forth in Article 67 of the Contract.

NOTICE TO ALL PROSPECTIVE CONTRACTORS

PARTICIPATION BY MINORITY-OWNED AND WOMEN-OWNED BUSINESS ENTERPRISES IN CITY PROCUREMENT

ARTICLE I. M/WBE PROGRAM

Local Law No. 129 of 2005 added and Local Law 1 of 2013 amended Section 6-129 of the Administrative Code of the City of New York (hereinafter "Section 6-129"). Section 6-129 establishes the program for participation in City procurement ("M/WBE Program") by minority-owned business enterprises ("MBEs") and women-owned business enterprises ("WBEs"), certified in accordance with Section 1304 of the New York City Charter. As stated in Section 6-129, the intent of the program is to address the impact of discrimination on the City's procurement process, and to promote the public interest in avoiding fraud and favoritism in the procurement process, increasing competition for City business, and lowering contract costs. The contract provisions contained herein are pursuant to Section 6-129, and the rules of the Department of Small Business Services ("DSBS") promulgated thereunder.

If this Contract is subject to the M/WBE Program established by Section 6-129, the specific requirements of MBE and/or WBE participation for this Contract are set forth in Schedule B of the Contract (entitled the "M/WBE Utilization Plan"), and are detailed below. The Contractor must comply with all applicable MBE and WBE requirements for this Contract.

All provisions of Section 6-129 are hereby incorporated in the Contract by reference and all terms used herein that are not defined herein shall have the meanings given such terms in Section 6-129. Article I, Part A, below, sets forth provisions related to the participation goals for construction, standard and professional services contracts. Article I, Part B, below, sets forth miscellaneous provisions related to the M/WBE Program.

PART A

PARTICIPATION GOALS FOR CONSTRUCTION, STANDARD AND PROFESSIONAL SERVICES CONTRACTS OR TASK ORDERS

1. The **MBE and/or WBE Participation Goals** established for this Contract or Task Orders issued pursuant to this Contract, ("**Participation Goals**"), as applicable, are set forth on Schedule B, Part I to this Contract (see Page 1, line 1 Total Participation Goals) or will be set forth on Schedule B, Part I to Task Orders issued pursuant to this Contract, as applicable.

The **Participation Goals** represent a percentage of the total dollar value of the Contract or Task Order, as applicable, that may be achieved by awarding subcontracts to firms certified with New York City Department of Small Business Services as MBEs and/or WBEs, and/or by crediting the participation of prime contractors and/or qualified joint ventures as provided in Section 3 below, unless the goals have been waived or modified by Agency in accordance with Section 6-129 and Part A, Sections 10 and 11 below, respectively.

2. If **Participation Goals** have been established for this Contract or Task Orders issued pursuant to this Contract, Contractor agrees or shall agree as a material term of the Contract that Contractor shall be subject to the **Participation Goals**, unless the goals are waived or modified by Agency in accordance with Section 6-129 and Part A, Sections 10 and 11 below, respectively.

3. If **Participation Goals** have been established for this Contract or Task Order issued pursuant to this Contract, a Contractor that is an MBE and/or WBE shall be permitted to count its own participation toward fulfillment of the relevant **Participation Goal**, provided that in accordance with Section 6-129 the value of Contractor's participation shall be determined by subtracting from the total value of the Contract or Task Order, as applicable, any amounts that the Contractor pays to direct subcontractors (as defined in Section 6-129(c)(13)), and provided

further that a Contractor that is certified as both an MBE and a WBE may count its own participation either toward the goal for MBEs or the goal for WBEs, but not both.

A Contractor that is a qualified joint venture (as defined in Section 6-129(c)(30)) shall be permitted to count a percentage of its own participation toward fulfillment of the relevant **Participation Goal**. In accordance with Section 6-129, the value of Contractor's participation shall be determined by subtracting from the total value of the Contract or Task Order, as applicable, any amounts that Contractor pays to direct subcontractors, and then multiplying the remainder by the percentage to be applied to total profit to determine the amount to which an MBE or WBE is entitled pursuant to the joint venture agreement, provided that where a participant in a joint venture is certified as both an MBE and a WBE, such amount shall be counted either toward the goal for MBEs or the goal for WBEs, but not both.

4. A. If **Participation Goals** have been established for this Contract, a prospective contractor shall be required to submit with its bid or proposal, as applicable, a completed Schedule B, M/WBE Utilization Plan, Part II (see Pages 2-4) indicating: (a) whether the contractor is an MBE or WBE, or qualified joint venture; (b) the percentage of work it intends to award to direct subcontractors; and (c) in cases where the contractor intends to award direct subcontracts, a description of the type and dollar value of work designated for participation by MBEs and/or WBEs, and the time frames in which such work is scheduled to begin and end. In the event that this M/WBE Utilization Plan indicates that the bidder or proposer, as applicable, does not intend to meet the **Participation Goals**, the bid or proposal, as applicable, shall be deemed non-responsive, unless Agency has granted the bidder or proposer, as applicable, a pre- award waiver of the Participation Goals in accordance with Section 6-129 and Part A, Section 10 below.

B. (i) If this Contract is for a master services agreement or other requirements type contract that will result in the issuance of Task Orders that will be individually registered ("Master Services Agreement") and is subject to M/WBE **Participation Goals**, a prospective contractor shall be required to submit with its bid or proposal, as applicable, a completed Schedule B, M/WBE Participation Requirements for Master Services Agreements That Will Require Individually Registered Task Orders, Part II (page 2) indicating the prospective contractor's certification and required affirmations to make all reasonable good faith efforts to meet participation goals established on each individual Task Order issued pursuant to this Contract, or if a partial waiver is obtained or such goals are modified by the Agency, to meet the modified **Participation Goals** by soliciting and obtaining the participation of certified MBE and/or WBE firms. In the event that the Schedule B indicates that the bidder or proposer, as applicable, does not intend to meet the **Participation Goals** that may be established on Task Orders issued pursuant to this Contract, the bid or proposal, as applicable, shall be deemed nonresponsive.

(ii) **Participation Goals** on a Master Services Agreement will be established for individual Task Orders issued after the Master Services Agreement is awarded. If **Participation Goals** have been established on a Task Order, a contractor shall be required to submit a Schedule B – M/WBE Utilization Plan For Independently Registered Task Orders That Are Issued Pursuant to Master Services Agreements, Part II (see Pages 2-4) indicating: (a) whether the contractor is an MBE or WBE, or qualified joint venture; (b) the percentage of work it intends to award to direct subcontractors; and (c) in cases where the contractor intends to award direct subcontracts, a description of the type and dollar value of work designated for participation by MBEs and/or WBEs, and the time frames in which such work is scheduled to begin and end. The contractor must engage in good faith efforts to meet the **Participation Goals** as established for the Task Order unless Agency has granted the contractor a pre-award waiver of the Participation Goals in accordance with Section 6-129 and Part A, Section 10 below.

C. **THE BIDDER/PROPOSER MUST COMPLETE THE SCHEDULE B INCLUDED HEREIN (SCHEDULE B, PART II). A SCHEDULE B SUBMITTED BY THE BIDDER/PROPOSER WHICH DOES NOT INCLUDE THE VENDOR CERTIFICATION AND REQUIRED AFFIRMATIONS (SEE SECTION V OF PART II) WILL BE DEEMED TO BE NON-**

RESPONSIVE, UNLESS A FULL WAIVER OF THE PARTICIPATION GOALS IS GRANTED (SCHEDULE B, PART III). IN THE EVENT THAT THE CITY DETERMINES THAT THE BIDDER/PROPOSER HAS SUBMITTED A SCHEDULE B WHERE THE VENDOR CERTIFICATION AND REQUIRED AFFIRMATIONS ARE COMPLETED BUT OTHER ASPECTS OF THE SCHEDULE B ARE NOT COMPLETE, OR CONTAIN A COPY OR COMPUTATION ERROR THAT IS AT ODDS WITH THE VENDOR CERTIFICATION AND AFFIRMATIONS, THE BIDDER/PROPOSER WILL BE NOTIFIED BY THE AGENCY AND WILL BE GIVEN FOUR (4) CALENDAR DAYS FROM RECEIPT OF NOTIFICATION TO CURE THE SPECIFIED DEFICIENCIES AND RETURN A COMPLETED SCHEDULE B TO THE AGENCY. FAILURE TO DO SO WILL RESULT IN A DETERMINATION THAT THE BID/PROPOSAL IS NON-RESPONSIVE. RECEIPT OF NOTIFICATION IS DEFINED AS THE DATE NOTICE IS E-MAILED OR FAXED (IF THE BIDDER/PROPOSER HAS PROVIDED AN E-MAIL ADDRESS OR FAX NUMBER), OR NO LATER THAN FIVE (5) CALENDAR DAYS FROM THE DATE OF MAILING OR UPON DELIVERY, IF DELIVERED.

5. Where an **M/WBE** Utilization Plan has been submitted, the Contractor shall, within 30 days of issuance by Agency of a notice to proceed, submit a list of proposed persons or entities to which it intends to award subcontracts within the subsequent 12 months. In the case of multiyear contracts, such list shall also be submitted every year thereafter. The Agency may also require the Contractor to report periodically about the contracts awarded by its direct subcontractors to indirect subcontractors (as defined in Section 6-129(c)(22)). **PLEASE NOTE: If this Contract is a public works project subject to GML §101(5) (i.e., a contract valued at or below $3M for projects in New York City) or if the Contract is subject to a project labor agreement in accordance with Labor Law §222, and the bidder is required to identify at the time of bid submission its intended subcontractors for the Wicks trades (plumbing and gas fitting; steam heating, hot water heating, ventilating and air conditioning (HVAC); and electric wiring), the Contractor must identify all those to which it intends to award construction subcontracts for any portion of the Wicks trade work at the time of bid submission, regardless of what point in the life of the contract such subcontracts will occur. In identifying intended subcontractors in the bid submission, bidders may satisfy any Participation Goals established for this Contract by proposing one or more subcontractors that are MBEs and/or WBEs for any portion of the Wicks trade work**. In the event that the Contractor's selection of a subcontractor is disapproved, the Contractor shall have a reasonable time to propose alternate subcontractors.

6. MBE and WBE firms must be certified by DSBS in order for the Contractor to credit such firms' participation toward the attainment of the **Participation Goals**. Such certification must occur prior to the firms' commencement of work. A list of MBE and WBE firms may be obtained from the DSBS website at www.nyc.gov/buycertified, by emailing DSBS at buyer@sbs.nyc.gov, by calling (212) 513-6356, or by visiting or writing DSBS at 110 William St., New York, New York, 10038, 7th floor. Eligible firms that have not yet been certified may contact DSBS in order to seek certification by visiting www.nyc.gov/getcertified, emailing MWBE@sbs.nyc.gov, or calling the DSBS certification helpline at (212) 513-6311. A firm that is certified as both an MBE and a WBE may be counted either toward the goal for MBEs or the goal for WBEs, but not both. No credit shall be given for participation by a graduate MBE or graduate WBE, as defined in Section 6-129(c)(20).

7. Where an **M/WBE** Utilization Plan has been submitted, the Contractor shall, with each voucher for payment, and/or periodically as Agency may require, submit statements, certified under penalty of perjury, which shall include, but not be limited to,: the total amount the Contractor paid to its direct subcontractors, and, where applicable pursuant to Section 6-129(j), the total amount direct subcontractors paid to indirect subcontractors; the names, addresses and contact numbers of each MBE or WBE hired as a subcontractor by the Contractor, and, where applicable, hired by any of the Contractor's direct subcontractors; and the dates and amounts paid to each MBE or WBE. The Contractor shall also submit, along with its voucher for final payment: the total

amount it paid to subcontractors, and, where applicable pursuant to Section 6-129(j), the total amount its direct subcontractors paid directly to their indirect subcontractors; and a final list, certified under penalty of perjury, which shall include the name, address and contact information of each subcontractor that is an MBE or WBE, the work performed by, and the dates and amounts paid to each.

8. If payments made to, or work performed by, MBEs or WBEs are less than the amount specified in the Contractor's **M/WBE** Utilization Plan, Agency shall take appropriate action, in accordance with Section 6-129 and Article II below, unless the Contractor has obtained a modification of its **M/WBE** Utilization Plan in accordance with Section 6-129 and Part A, Section 11 below.

9. Where an **M/WBE** Utilization Plan has been submitted, and the Contractor requests a change order the value of which exceeds the greater of 10 percent of the Contract or Task Order, as applicable, or $500,000, Agency shall review the scope of work for the Contract or Task Order, as applicable, and the scale and types of work involved in the change order, and determine whether the **Participation Goals** should be modified.

10. Pre-award waiver of the **Participation Goals**. (a) A bidder or proposer, or contractor with respect to a Task Order, may seek a pre-award full or partial waiver of the **Participation Goals** in accordance with Section 6-129, which requests that Agency change one or more **Participation Goals** on the grounds that the **Participation Goals** are unreasonable in light of the availability of certified firms to perform the services required, or by demonstrating that it has legitimate business reasons for proposing a lower level of subcontracting in its M/WBE Utilization Plan.

(b) To apply for a full or partial waiver of the **Participation Goals**, a bidder, proposer, or contractor, as applicable, must complete Part III (Page 5) of Schedule B and submit such request no later than seven (7) calendar days prior to the date and time the bids, proposals, or Task Orders are due, in writing to the Agency by email at MWBEModification@ddc.nyc.gov. Bidders, proposers, or contractors, as applicable, who have submitted requests will receive an Agency response by no later than two (2) calendar days prior to the due date for bids, proposals, or Task Orders; provided, however, that if that date would fall on a weekend or holiday, an Agency response will be provided by close-of-business on the business day before such weekend or holiday date.

(c) If the Agency determines that the **Participation Goals** are unreasonable in light of the availability of certified firms to perform the services required, it shall revise the solicitation and extend the deadline for bids and proposals, or revise the Task Order, as applicable.

(d) Agency may grant a full or partial waiver of the **Participation Goals** to a bidder, proposer or contractor, as applicable, who demonstrates—before submission of the bid, proposal or Task Order, as applicable—that it has legitimate business reasons for proposing the level of subcontracting in its **M/WBE** Utilization Plan. In making its determination, Agency shall consider factors that shall include, but not be limited to, whether the bidder, proposer or contractor, as applicable, has the capacity and the bona fide intention to perform the Contract without any subcontracting, or to perform the Contract without awarding the amount of subcontracts represented by the **Participation Goals**. In making such determination, Agency may consider whether the **M/WBE** Utilization Plan is consistent with past subcontracting practices of the bidder, proposer or contractor, as applicable, whether the bidder, proposer or contractor, as applicable, has made efforts to form a joint venture with a certified firm, and whether the bidder, proposer, or contractor, as applicable, has made good faith efforts to identify other portions of the Contract that it intends to subcontract.

11. Modification of **M/WBE** Utilization Plan. (a) A Contractor may request a modification of its **M/WBE** Utilization Plan after award of this Contract. **PLEASE NOTE: If this Contract is a public works project subject to GML §101(5) (i.e., a contract valued at or below $3M for projects in New York City) or if the Contract is subject to a project labor agreement in accordance**

with Labor Law §222, and the bidder is required to identify at the time of bid submission its intended subcontractors for the Wicks trades (plumbing and gas fitting; steam heating, hot water heating, ventilating and air conditioning (HVAC); and electric wiring), the Contractor may request a Modification of its M/WBE Utilization Plan as part of its bid submission. The Agency may grant a request for Modification of a Contractor's **M/WBE** Utilization Plan if it determines that the Contractor has established, with appropriate documentary and other evidence, that it made reasonable, good faith efforts to meet the **Participation Goals.** In making such determination, Agency shall consider evidence of the following efforts, as applicable, along with any other relevant factors:

(i) The Contractor advertised opportunities to participate in the Contract, where appropriate, in general circulation media, trade and professional association publications and small business media, and publications of minority and women's business organizations;
(ii) The Contractor provided notice of specific opportunities to participate in the Contract, in a timely manner, to minority and women's business organizations;
(iii) The Contractor sent written notices, by certified mail or facsimile, in a timely manner, to advise MBEs or WBEs that their interest in the Contract was solicited;
(iv) The Contractor made efforts to identify portions of the work that could be substituted for portions originally designated for participation by MBEs and/or WBEs in the M/WBE Utilization Plan, and for which the Contractor claims an inability to retain MBEs or WBEs;
(v) The Contractor held meetings with MBEs and/or WBEs prior to the date their bids or proposals were due, for the purpose of explaining in detail the scope and requirements of the work for which their bids or proposals were solicited;
(vi) The Contractor made efforts to negotiate with MBEs and/or WBEs as relevant to perform specific subcontracts, or act as suppliers or service providers;
(vii) Timely written requests for assistance made by the Contractor to Agency's M/WBE liaison officer and to DSBS;
(viii) Description of how recommendations made by DSBS and Agency were acted upon and an explanation of why action upon such recommendations did not lead to the desired level of participation of MBEs and/or WBEs.

Agency's M/WBE officer shall provide written notice to the Contractor of the determination.

(b) The Agency may modify the **Participation Goals** when the scope of the work has been changed by the Agency in a manner that affects the scale and types of work that the Contractor indicated in its **M/WBE** Utilization Plan would be awarded to subcontractors.

12. If this Contract is for an indefinite quantity of construction, standard or professional services or is a requirements type contract and the Contractor has submitted an **M/WBE** Utilization Plan and has committed to subcontract work to MBEs and/or WBEs in order to meet the **Participation Goals**, the Contractor will not be deemed in violation of the M/WBE Program requirements for this Contract with regard to any work which was intended to be subcontracted to an MBE and/or WBE to the extent that the Agency has determined that such work is not needed.

13. If **Participation Goals** have been established for this Contract or a Task Order issued pursuant to this Contract, at least once annually during the term of the Contract or Task Order, as applicable, Agency shall review the Contractor's progress toward attainment of its M/WBE Utilization Plan, including but not limited to, by reviewing the percentage of work the Contractor has actually awarded to MBE and/or WBE subcontractors and the payments the Contractor made to such subcontractors.

14. If **Participation Goals** have been established for this Contract or a Task Order issued pursuant to this Contract, Agency shall evaluate and assess the Contractor's performance in meeting those goals, and such evaluation and assessment shall become part of the Contractor's overall contract performance evaluation.

PART B: MISCELLANEOUS

1. The Contractor shall take notice that, if this solicitation requires the establishment of an **M/WBE** Utilization Plan, the resulting contract may be audited by DSBS to determine compliance with Section 6-129. See §6-129(e)(10). Furthermore, such resulting contract may also be examined by the City's Comptroller to assess compliance with the **M/WBE** Utilization Plan.

2. Pursuant to DSBS rules, construction contracts that include a requirement for an **M/WBE** Utilization Plan shall not be subject to the law governing Locally Based Enterprises set forth in Section 6-108.1 of the Administrative Code of the City of New York.

3. DSBS is available to assist contractors and potential contractors in determining the availability of MBEs and/or WBEs to participate as subcontractors, and in identifying opportunities that are appropriate for participation by MBEs and/or WBEs in contracts.

4. Prospective contractors are encouraged to enter into qualified joint venture agreements with MBEs and/or WBEs as defined by Section 6-129(c)(30).

5. By submitting a bid or proposal the Contractor hereby acknowledges its understanding of the M/WBE Program requirements set forth herein and the pertinent provisions of Section 6-129, and any rules promulgated thereunder, and if awarded this Contract, the Contractor hereby agrees to comply with the M/WBE Program requirements of this Contract and pertinent provisions of Section 6-129, and any rules promulgated thereunder, all of which shall be deemed to be material terms of this Contract. The Contractor hereby agrees to make all reasonable, good faith efforts to solicit and obtain the participation of MBEs and/or WBEs to meet the required **Participation Goals**.

ARTICLE II. ENFORCEMENT

1. If Agency determines that a bidder or proposer, as applicable, has, in relation to this procurement, violated Section 6-129 or the DSBS rules promulgated pursuant to Section 6-129, Agency may disqualify such bidder or proposer, as applicable, from competing for this Contract and the Agency may revoke such bidder's or proposer's prequalification status, if applicable.

2. Whenever Agency believes that the Contractor or a subcontractor is not in compliance with Section 6-129 or the DSBS rules promulgated pursuant to Section 6-129, or any provision of this Contract that implements Section 6-129, including, but not limited to any **M/WBE** Utilization Plan, Agency shall send a written notice to the Contractor describing the alleged noncompliance and offering the Contractor an opportunity to be heard. Agency shall then conduct an investigation to determine whether such Contractor or subcontractor is in compliance.

3. In the event that the Contractor has been found to have violated Section 6-129, the DSBS rules promulgated pursuant to Section 6-129, or any provision of this Contract that implements Section 6-129, including, but not limited to, any **M/WBE** Utilization Plan, Agency may determine that one of the following actions should be taken:

(a) entering into an agreement with the Contractor allowing the Contractor to cure the violation;
(b) revoking the Contractor's pre-qualification to bid or make proposals for future contracts;
(c) making a finding that the Contractor is in default of the Contract;
(d) terminating the Contract;
(e) declaring the Contractor to be in breach of Contract;
(f) withholding payment or reimbursement;
(g) determining not to renew the Contract;
(h) assessing actual and consequential damages;
(i) assessing liquidated damages or reducing fees, provided that liquidated damages may be based on amounts representing costs of delays in carrying out the purposes of the M/WBE Program, or in meeting the purposes of the Contract, the costs of meeting utilization goals

through additional procurements, the administrative costs of investigation and enforcement, or other factors set forth in the Contract;

(j) exercising rights under the Contract to procure goods, services or construction from another contractor and charge the cost of such contract to the Contractor that has been found to be in noncompliance; or

(k) taking any other appropriate remedy.

4. If an **M/WBE** Utilization Plan has been submitted, and pursuant to this Article II, Section 3, the Contractor has been found to have failed to fulfill its **Participation Goals** contained in its **M/WBE** Utilization Plan or the **Participation Goals** as modified by Agency pursuant to Article I, Part A, Section 11, Agency may assess liquidated damages in the amount of ten percent (10%) of the difference between the dollar amount of work required to be awarded to MBE and/or WBE firms to meet the **Participation Goals** and the dollar amount the Contractor actually awarded and paid, and/or credited, to MBE and/or WBE firms. In view of the difficulty of accurately ascertaining the loss which the City will suffer by reason of Contractor's failure to meet the **Participation Goals**, the foregoing amount is hereby fixed and agreed as the liquidated damages that the City will suffer by reason of such failure, and not as a penalty. Agency may deduct and retain out of any monies which may become due under this Contract the amount of any such liquidated damages; and in case the amount which may become due under this Contract shall be less than the amount of liquidated damages suffered by the City, the Contractor shall be liable to pay the difference.

5. Whenever Agency has reason to believe that an MBE and/or WBE is not qualified for certification, or is participating in a contract in a manner that does not serve a commercially useful function (as defined in Section 6-129(c)(8)), or has violated any provision of Section 6- 129, Agency shall notify the Commissioner of DSBS who shall determine whether the certification of such business enterprise should be revoked.

6. Statements made in any instrument submitted to Agency pursuant to Section 6-129 shall be submitted under penalty of perjury and any false or misleading statement or omission shall be grounds for the application of any applicable criminal and/or civil penalties for perjury. The making of a false or fraudulent statement by an MBE and/or WBE in any instrument submitted pursuant to Section 6-129 shall, in addition, be grounds for revocation of its certification.

7. The Contractor's record in implementing its **M/WBE** Utilization Plan shall be a factor in the evaluation of its performance. Whenever Agency determines that a Contractor's compliance with an **M/WBE** Utilization Plan has been unsatisfactory, Agency shall, after consultation with the City Chief Procurement Officer, file an advice of caution form for inclusion in PASSPort as caution data.

PRE-AWARD PROCESS

The bidder is advised that as part of the pre-award review of its bid, the Agency will require the three lowest apparent responsive and responsible bidders to submit the information described in Sections (A) through (D) below. These bidders will be notified by DDC (by email, facsimile, or in writing), and the Agency's notice will specify the types of information that the bidder must submit to the Agency. The types of information the bidder may be required to submit are described below. Once notified, the bidder must submit such information to the Agency within five (5) business days following receipt of notification from DDC that it is among the low bidders. In the event the bidder fails to submit the required information within the specified time frame, the Agency may reject the bid as being non-responsive.

In the event the bidder fails to submit the required information within the specified time frame, the Agency may reject the bid as being nonresponsive.

****

(A) **Project Reference Form**: The bidder must complete and submit the Project Reference Form set forth starting on page A-53 of this Bid Booklet. The Project Reference Form consists of three (3) parts: (1) Contracts Completed by the Bidder, (2) Contracts Currently Under Construction by the Bidder, and (3) Pending Contracts Not Yet Started by the Bidder.

(B) **Copy of License**: The bidder must submit a copy of the license under which the bidder will be performing the work. Such license must clearly show the following: (1) Name of the Licensee, (2) License Number, and (3) Expiration date of the License. A copy of the license will be required from bidders for the following contracts: Plumbing Work, Electrical Work and Asbestos Abatement.

(C) **Financial Information**: The bidder must submit the financial information described below:

(1) Audited Financial Statements: Financial statements (Balance Sheet and Income Statement) of the entity submitting the bid, as audited by an independent auditor licensed to practice as a certified public accountant (CPA). Audited financial statements for the three (3) most recent fiscal years must be submitted. Each such financial statement must include the auditor's standard report.

If the bidder does not have audited financial statements, the bidder must submit an affidavit attesting to the fact that the bidder does not have such statements. In addition, the bidder must submit the following documentation covering the three (3) most recent fiscal years: signed federal tax returns, unaudited financial statements, and a "certified review letter" from a certified public accountant (CPA) verifying the unaudited financial statements.

Unless the most recent audited or unaudited financial statement was issued within ninety (90) days, the bidder must submit interim financial information that includes data on financial position and results of operation (income data) for the current fiscal year. Such information may be summarized on a monthly or quarterly basis or at other intervals.

(2) Schedule of Aged Accounts Receivable, including portion due within ninety (90) days.

(D) **Project Specific Information**: The bidder must submit the project specific information described below:

(1) Statement indicating the number of years of experience the bidder has had and in what type of construction.

(2) Resumes of all key personnel to be involved in the project, including the proposed project superintendent.

(3) List of significant pieces of equipment expected to be used for the contract, and whether such equipment is owned or leased.
(4) Description of work expected to be subcontracted, and to what firms, if known.
(5) List of key material suppliers.
(6) Preliminary bar chart time schedule
(7) The bidder's expected means of financing the project. This submission should be based on the assumption that the contractor is required to finance two times (2X) the average monthly billings for the project throughout the contract period.
(8) Any other issues the bidder sees as impacting the contractor's ability to complete the project according to the contract.

In addition to the information described in Sections (A) through (D) above, the bidder shall submit such additional information as the Commissioner may require, including without limitation, an explanation or justification for specific unit price items.

The bidder is further advised that it may be required to attend a pre-award meeting with DDC representatives. If such a meeting is convened, the bidder will be advised as to any additional material to be provided.

PASSPort COMPLIANCE

All vendors that intend to do business with the City of New York must complete a disclosure process in order to be considered for a contract. This disclosure process was formerly completed using Vendor Information Exchange System (VENDEX) paper-based forms. The City of New York has moved collection of vendor disclosure information online. In early August 2017, the New York City Mayor's Office of Contract Services (MOCS) launched the **Procurement and Sourcing Solutions Portal (PASSPort)**, a new online procurement system that replaced the paper-VENDEX process. In anticipation of awards, all bidders must create online accounts in the new PASSPort system, and file all disclosure information using PASSPort. **Paper submissions, including certifications of no changes to existing VENDEX packages, will not be accepted in lieu of complete online filings using PASSPort.**

All vendors that intend to do business with the City, but specifically those that fall into any of the following categories, are required to enroll:

- Have a pending award with a City Agency; or
- Hold a current contract with a City Agency and have either an expiring VENDEX or expiring Certificate of No Change.

The Department of Design and Construction (DDC) and MOCS hereby notifies all proposers that the PASSPort system is available, and that disclosure filing completion is required prior to any award through this competitive bid.

To enroll in PASSPort and to access the PASSPort website (including online training), please visit www.nyc.gov/passport. Contact MOCS at passport@mocs.nyc.gov for additional information and technical support.

CONSTRUCTION EMPLOYMENT REPORT

All bidders will be required to submit either a Construction Employment Report (CER) if the bid amount is $1,000,000 or greater.

The CER template form is available online at:
https://www1.nyc.gov/assets/sbs/downloads/pdf/businesses/DLS_Constru_Employ_Rpt.pdf

Instructions for completing the Construction Employment Report are available online at:
https://www1.nyc.gov/assets/sbs/downloads/pdf/businesses/DLS_Cons_Employ_Rpt_Inst.pdf

(NO TEXT ON THIS PAGE)

CITY OF NEW YORK
DEPARTMENT OF DESIGN AND CONSTRUCTION
DIVISION OF INFRASTRUCTURE

REQUIRED FORMS

(NO TEXT ON THIS PAGE)

BID FORM

THE CITY OF NEW YORK
DEPARTMENT OF DESIGN AND CONSTRUCTION
DIVISION OF INFRASTRUCTURE

BID FOR FURNISHING ALL LABOR AND MATERIAL NECESSARY AND REQUIRED FOR:

PROJECT ID: SANDRESM1

INSTALLATION OF EAST SIDE COASTAL RESILENCY FROM MONTGOMERY STREET TO EAST 15TH STREET

Together With All Work Incidental Thereto
BOROUGH OF MANHATTAN
CITY OF NEW YORK

Name of Bidder: IPC Resiliency Partners

Date of Bid Opening: February 8, 2021

Bidder is: (Check one, whichever applies) Individual ( ) Partnership (x) Corporation ( )

Place of Business of Bidder: 1010 Northern Boulevard, Suite 200, Great Neck, NY 11021

Bidder's Telephone Number: 646-813-6770 Fax Number: 718-357-4820

Bidder's E-Mail Address: rocken@mljcontracting.com

Residence of Bidder (If Individual): _____

If Bidder is a Partnership, fill in the following blanks:

Names of Partners	Residence of Partners
Iovino Affiliates JV (*)	1010 Northern Blvd, Suite 200 Great Neck NY 11021
Posillico Civil, Inc	1750 New Hwy, Farmingdale, NY 11735
CAC Industries Inc	54-08 Vernon Blvd, Long Island City, NY 11101

If Bidder is a Corporation, fill in the following blanks:

Organized under the laws of the State of _____

Name and Home Address of President: _____

Name and Home Address of Secretary: _____

Name and Home Address of Treasurer: _____

(*) -- Iovino Affiliates JV is a tri-venture of MLJ Contracting Corp., J-Track LLC, and Welkin Mechnical LLC

BID FORM

The above-named Bidder affirms and declares:

1. The said bidder is of lawful age and the only one interested in this bid; and no person, firm or corporation other than hereinbefore named has any interest in this bid, or in the Contract proposed to be taken.

2. By submission of this bid, each bidder and each person signing on behalf of any bidder certifies, and in the case of a joint bid each party thereto certifies as to its own organization, under penalty of perjury, that to the best of its knowledge and belief: (1) the prices in this bid have been arrived at independently without collusion, consultation, communication or agreement, for the purpose of restricting competition, as to any matter relating to such prices with any other bidder or with any competitor; (2) unless otherwise required by law, the prices quoted in this bid have not been knowingly disclosed by the bidder and will not knowingly be disclosed by the bidder prior to opening, directly or indirectly, to any other bidder or to any competitor; and (3) No attempt has been made or will be made by the bidder to induce any other person, partnership or corporation to submit or not to submit a bid for the purpose of restricting competition.

3. No councilman or other officer or employee or person whose salary is payable in whole or in part from the City Treasury is directly or indirectly interested in this bid, or in the supplies, materials, equipment, work or labor to which it relates, or in any of the profits thereof.

4. The bidder is not in arrears to the City of New York upon debt or contract or taxes, and is not a defaulter, as surety or otherwise, upon any obligation of the City of New York, and has not been declared not responsible, or disqualified, by any agency of the City of New York or State of New York, nor is there any proceeding pending relating to the responsibility or qualification of the bidder to receive public contracts except as set forth on the Affirmation included as page C-6 of this Bid Booklet.

The bidder hereby affirms that it has paid all applicable City income, excise and other taxes for all years it has conducted business activities in New York City.

5. The bidder, as an individual, or as a member, partner, director or officer of the bidder, if the same be a firm, partnership or corporation, executes this document expressly warranting and representing that should this bid be accepted by the City and the Contract awarded to the bidder, the bidder and the bidder's subcontractors engaged in the performance: (1) will comply with the provisions of Section 6-108 of the Administrative Code of the City of New York and the non-discrimination provisions of Section 220a of the New York State Labor Law, as more expressly and in detail set forth in the Agreement; (2) will comply with Section 6-109 of the Administrative Code of the City of New York in relation to minimum wages and other stipulations as more expressly and in detail set forth in the Agreement; (3) have complied with the provisions of the aforesaid laws since their respective effective dates, and (4) will post notices to be furnished by the City, setting forth the requirements of the aforesaid laws in prominent and conspicuous places in each and every plant, factory, building and structure where employees engaged in the performance of the Contract can readily view it, and will continue to keep such notices posted until the supplies, materials and equipment, or work labor and services required to be furnished or rendered by the Contractor have been finally accepted by the City. In the event of any breach or violation of the foregoing, the Contractor may be subject to damages, liquidated or otherwise, cancellation of the Contract and suspension as a bidder for a period of three years. (The words, "the bidder" where used herein shall mean the individual bidder, firm, partnership or corporation executing this bid).

6. Compliance Report

The bidder, as an individual, or as a member, partner, director, or officer of the bidder, if the same be a firm, partnership, or corporation, (1) represents that the bidder's attention has been

specifically drawn to Executive Order No. 50, dated, April 25, 1980, on Equal Employment Compliance of the contract, and (2) warrants that the bidder will comply with the provisions of Executive Order No. 50. The Employment Report must be submitted as part of the bid.

The bidder, as an individual, or as a member, partner, director, or officer of the bidder, if the same be a firm, partnership, or corporation, executes this document expressly warranting that the bidder will comply with: (1) the provision of the contract on providing records, Chapter 8.

7. By submission of this bid, the bidder certifies that it now has and will continue to have the financial capability to fully perform the work required for this contract. Any award of this contract will be made in reliance upon such certification. Upon request therefor, the bidder will submit written verification of such financial capability in a form that is acceptable to the department.

8. In accordance with Section 165 of the State Finance Law, the bidder agrees that tropical hardwoods, as defined in Section 165 of the State Finance Law, shall not be utilized in the performance of this Contract, except as the same are permitted by the foregoing provision of law.

9. The bidder has visited and examined the site of the work and has carefully examined the Contract in the form approved by the Corporation Counsel, and will execute the Contract and perform all its items, covenants and conditions, and will provide, furnish and deliver all the work, materials, supplies, tools and appliances for all labor and materials necessary or required for the hereinafter named work, all in strict conformity with the Contract, for the prices set forth in the Bid Schedule.

10. M/WBE UTILIZATION PLAN: By signing its bid, the bidder agrees to the Vendor Certification and Required Affirmations set forth below, unless a full waiver of the Participation Goals is granted. The Vendor Certification and Required Affirmations will be deemed to satisfy the requirement to complete Section V of Part II of Schedule B: M/WBE Utilization Plan.

Section V - Vendor Certification and Required Affirmations:

I hereby:

1) acknowledge my understanding of the M/WBE participation requirements as set forth in this Contract and the pertinent provisions of Section 6-129 of the Administrative Code of the City of New York and the rules promulgated thereunder;

2) affirm that the information supplied in support of the M/WBE Utilization Plan is true and correct;

3) agree, if awarded this Contract, to comply with the M/WBE participation requirements of this Contract, the pertinent provisions of Section 6-129, and the rules promulgated thereunder, all of which shall be deemed to be material terms of this Contract;

4) agree and affirm that it is a material term of this Contract that the Vendor will award the total dollar value of the M/WBE Participation Goals to certified MBEs and/or WBEs, unless a full waiver is obtained or such goals are modified by the Agency; and

5) agree and affirm, if awarded this Contract, to make all reasonable, good faith efforts to meet the M/WBE Participation Goals, or if a partial waiver is obtained or such goals are modified by the Agency, to meet the modified Participation Goals by soliciting and obtaining the participation of certified MBE and/or WBE firms.

BID FORM

PROJECT ID. SANDRESM1

TOTAL BID PRICE: In the space provided below, the Bidder shall indicate its Total Bid Price in figures. Such Total Bid Price is set forth on the final page of the Bid Schedule.

TOTAL BID PRICE:
(a/k/a BID PROPOSAL)

$ 1,272,221,100.00

J.H.

BIDDER'S SIGNATURE AND AFFIDAVIT

Bidder: IPC Resiliency Partners

By: _____
(Signature of Partner or corporate officer)

_____
Secretary of Corporate Bidder

Attest:
(Corporate Seal)

Affidavit on the following page should be subscribed and sworn to before a Notary Public

BID FORM (TO BE NOTARIZED)

AFFIDAVIT WHERE BIDDER IS AN INDIVIDUAL

STATE OF NEW YORK, COUNTY OF_____ ss:
_____being duly sworn says:
I am the person described in and who executed the foregoing bid, and the several matters therein stated are in all respects true.

_____
(Signature of the person who signed the Bid)

Subscribed and sworn to before me this
_____ day of_____, _____

_____
Notary Public

AFFIDAVIT WHERE BIDDER IS A PARTNERSHIP

STATE OF NEW YORK, COUNTY OF Queens ss:
Richard Ocken being duly sworn says:
I am a member of IPC Resiliency Partners the firm described in and which executed the foregoing bid. I subscribed the name of the firm thereto on behalf of the firm, and the several matters therein stated are in all respects true.

_____
(Signature of Partner who signed the Bid)

Subscribed and sworn to before me this
8th day of Feb., 2021

_____
Notary Public

JAMIE LOPRINZI
NOTARY PUBLIC, STATE OF NEW YORK
QUEENS COUNTY
LIC # 01LO6138413
COMM. EXP. 3/25/2022

AFFIDAVIT WHERE BIDDER IS A CORPORATION

STATE OF NEW YORK, COUNTY OF_____ ss:
_____being duly sworn says:
I am the _____of the above named corporation whose name is subscribed to and which executed the foregoing bid. I reside at
_____.
I have knowledge of the several matters therein stated, and they are in all respects true.

_____
(Signature of Corporate Officer who signed the Bid)

Subscribed and sworn to before me this
_____ day of_____, _____

_____
Notary Public

AFFIRMATION

PROJECT ID. SANDRESM1

The undersigned bidder affirms and declares that said bidder is not in arrears to the City of New York upon debt, contract or taxes and is not a defaulter, as surety or otherwise, upon obligation to the City of New York, and has not been declared not responsible, or disqualified, by any agency of the City of New York, nor is there any proceeding pending relating to the responsibility or qualification of the bidder to receive public contracts except:

None

(If none, the bidder shall insert the word "None" in the space provided above.)

Full Name of Bidder: IPC Resiliency Partners
Address: 1720 Whitestone Expwy., Suite 304
City Whitestone State NY Zip Code 11357

CHECK ONE BOX AND INCLUDE APPROPRIATE NUMBER:

/__/ A - Individual or Sole Proprietorship*
SOCIAL SECURITY NUMBER

/x_/ B - Partnership, Joint Venture or other unincorporated organization
EMPLOYER IDENTIFICATION NUMBER

86-1934841

/__/ C- Corporation
EMPLOYER IDENTIFICATION NUMBER

By: _____
Signature

Title: President (of MLJ-Officer in IPC)

If a corporation, place seal here

This affirmation must be signed by an officer or duly authorized representative.

*Under the Federal Privacy Act the furnishing of Social Security Numbers by bidders on City contracts is voluntary. Failure to provide a Social Security Number will not result in a bidder's disqualification. Social Security Numbers will be used to identify bidders, proposers or vendors to ensure their compliance with laws, to assist the City in enforcement of laws, as well as to provide the City a means of identifying of businesses which seek City contracts.

BID BONDS

BID BOND 1

FORM OF BID BOND

KNOW ALL MEN BY THESE PRESENTS. That we, IPC Resiliency Partners
1720 Whitestone Expressway, Suite 300, Whitestone, NY 11357

hereinafter referred to as the "Principal", and Liberty Mutual Insurance Company
175 Berkeley St., Boston, MA 02116

hereinafter referred to as the "Surety" are held and firmly bound to THE CITY OF NEW YORK, hereinafter referred to as the "CITY", or to its successors and assigns in the penal sum of

Ten Percent of Proposal Price

($ 10% of P.P.), Dollars lawful money of the United States, for the payment of which said sum of money well and truly to be made, we, and each of us, bind ourselves, our heirs, executors, administrators, successors and assigns, jointly and severally, firmly by these presents.

Whereas, the Principal is about to submit (or has submitted) to the City the accompanying proposal, hereby made a part hereof, to enter into a contract in writing for Project ID: SANDRESM1,

Installation of East Side Coastal Resiliency from Montgomery Street to East 15th Street, Including Flood Protection System, Roller and Swing Gates, Park Reconstruction, Sewer, Pedestrian Bridges, Park, Buildings, Ground Improvement, Street Lighting and Traffic Work Together With All Work Incidental Thereto, Borough of Manhattan, City of New York

NOW, THEREFORE, the conditions of this obligation are such that if the Principal shall not withdraw said Proposal without the consent of the City for a period of forty-five (45) days after the opening of bids and in the event of acceptance of the Principal's Proposal by the City, if the Principal shall:

(a) Within ten (10) days after notification by the City, execute in quadruplicate and deliver to the City all the executed counterparts of the Contract in the form set forth in the Contract Documents, in accordance with the proposal as accepted, and

(b) Furnish a performance bond and separate payment bond, as may be required by the City, for the faithful performance and proper fulfillment of such Contract, which bonds shall be satisfactory in all respects to the City and shall be executed by good and sufficient sureties, and

(c) In all respects perform the agreement created by the acceptance of said Proposal as provided in the Information for Bidders, bound herewith and made a part hereof, or if the City shall reject the aforesaid Proposal, then this obligation shall be null and void; otherwise to remain in full force and effect.

BID BOND 2

In the event that the Proposal of the Principal shall be accepted and the Contract be awarded to the Principal the Surety hereunder agrees subject only to the payment by the Principal of the premium therefore, if requested by the City, to write the aforementioned performance and payment bonds in the form set forth in the Contract Documents.

It is expressly understood and agreed that the liability of the Surety for any and all claims hereunder shall in no event exceed the penal amount of this obligation as herein stated.

There shall be no liability under this bond if, in the event of the acceptance of the Principal's Proposal by the City, either a performance bond or payment bond, or both, shall not be required by the City on or before the 30th day after the date on which the City signs the Contract.

The surety, for the value received, hereby stipulates and agrees that the obligations of the Surety and its bond shall in no way be impaired or affected by any postponements of the date upon which the City will receive or open bids, or by any extensions of the time within which the City may accept the Principal's Proposal, or by any waiver by the City of any of the requirements of the Information for Bidders, and the Surety hereby waives notice of any such postponements, extensions, or waivers.

IN WITNESS WHEREOF, the Principal and the Surety have hereunto set their hands and seals and such of them as are corporations have caused their corporate seals to be hereto affixed and these presents to be signed by their proper officers the 3rd day of February, 2021.

(Seal)

IPC Resiliency Partners (L.S.)

Principal

By: _____

(Seal)

Liberty Mutual Insurance Company

Surety

By: _____

Colette R. Chisholm, Attorney-In-Fact

BID BOND 3

ACKNOWLEDGMENT OF PRINCIPAL, IF A CORPORATION

State of _____ County of _____ ss:
On this _____ day of _____, _____, before me personally came _____ to me known, who, being by me duly sworn, did depose and say that he/she/they resides at

_____
that he/she/they is the _____ of

_____
the corporation described in and which executed the foregoing instrument; that he/she/they knows the seal of said corporation; that one of the seals affixed to said instrument is such seal; that it was so affixed by order of the directors of said corporation, and that he/she/they signed his name thereto by like order.

_____

Notary Public

ACKNOWLEDGMENT OF PRINCIPAL, IF A PARTNERSHIP

State of _____ County of _____ ss:
On this _____ day of _____, _____, before me personally appeared _____ to me known and known to me to be one of the members of the firm of _____described in and who executed the foregoing instrument, and he/she/they acknowledged to me that he/she/they executed the same as and for the act and deed of said firm.

_____

Notary Public

ACKNOWLEDGMENT OF PRINCIPAL, IF AN INDIVIDUAL

State of _____ County of _____ ss:
On this _____ day of _____, _____, before me personally appeared _____ to me known and known to me to be the person described in and who executed the foregoing instrument and acknowledged that he/she/they executed the same.

_____

Notary Public

AFFIX ACKNOWLEDGMENTS AND JUSTIFICATION OF SURETIES

ACKNOWLEDGEMENT OF PRINCIPAL
IF A TRI VENTURE

STATE OF NEW YORK }

COUNTY OF QUEENS }

On this 4th day of Feb. 20 21, personally appeared before me Richard Ocken member of the firm/Tri Venture of IPC Resiliency Partners to me known and known to me to be the individual described in and who executed the foregoing instrument and he/she acknowledged to me that he/she executed the same for an on behalf of said firm/Tri Venture.

Sworn before me this 4th day of Feb. 20 21

Jamie LoPrinzi
Notary Public

JAMIE LOPRINZI
NOTARY PUBLIC, STATE OF NEW YORK
QUEENS COUNTY
LIC # 01LO6138413
COMM. EXP. 3/25/2022

ACKNOWLEDGMENT OF SURETY COMPANY

STATE OF New York }

COUNTY OF Nassau }

On this February 3, 2021, before me personally came Colette R. Chisholm to me known, who, being by me duly sworn, did depose and say; that he/she resides in New York County, State of New York that he/she is the Attorney-In-Fact of the Liberty Mutual Insurance Company the corporation described in which executed the above instrument; that he/she knows the seal of said corporation; that the seal affixed to said instrument is such corporate seal; that is was so affixed by the Board of Directors of said corporation; and that he/she signed his/her name thereto by like order; and the affiant did further depose and say that the Superintendent of Insurance of the State of New York, has pursuant to Section 1111 of the Insurance Law of the State of New York, issued to Liberty Mutual Insurance Company (Surety) his/her certificate of qualification evidencing the qualification of said Company and its sufficiency under any law of the State of New York as surety and guarantor, and the propriety of accepting and approving is as such; and that such certificate has not been revoked.

Notary Public

NY acknowledgement

CRISTINA PAGAN
Notary Public-State of New York
No. 01PA6389428
Qualified in Suffolk County
Commission Expires 3/25/2023

This Power of Attorney limits the acts of those named herein, and they have no authority to bind the Company except in the manner and to the extent herein stated.

Liberty Mutual Insurance Company
The Ohio Casualty Insurance Company
West American Insurance Company

Certificate No: **8200782-969603**

POWER OF ATTORNEY

KNOWN ALL PERSONS BY THESE PRESENTS: That The Ohio Casualty Insurance Company is a corporation duly organized under the laws of the State of New Hampshire, that Liberty Mutual Insurance Company is a corporation duly organized under the laws of the State of Massachusetts, and West American Insurance Company is a corporation duly organized under the laws of the State of Indiana (herein collectively called the "Companies"), pursuant to and by authority herein set forth, does hereby name, constitute and appoint, Colette R. Chisholm; Dana Granice; Susan Lupski; Robert T. Pearson; Katherine Acosta; Thomas Bean; George O. Brewster; Desiree Cardlin; Lee Ferrucci; Peter F. Jones; Rita Losquadro; Gerard S. Macholz; Camille Maitland; Nelly Renchiwich; Vincent A. Walsh; Michelle Wannamaker

all of the city of Uniondale state of NY each individually if there be more than one named, its true and lawful attorney-in-fact to make, execute, seal, acknowledge and deliver, for and on its behalf as surety and as its act and deed, any and all undertakings, bonds, recognizances and other surety obligations, in pursuance of these presents and shall be as binding upon the Companies as if they have been duly signed by the president and attested by the secretary of the Companies in their own proper persons.

IN WITNESS WHEREOF, this Power of Attorney has been subscribed by an authorized officer or official of the Companies and the corporate seals of the Companies have been affixed thereto this 26th day of March, 2019.

Liberty Mutual Insurance Company
The Ohio Casualty Insurance Company
West American Insurance Company

By: _____
David M. Carey, Assistant Secretary

State of PENNSYLVANIA
County of MONTGOMERY ss

On this 26th day of March, 2019 before me personally appeared David M. Carey, who acknowledged himself to be the Assistant Secretary of Liberty Mutual Insurance Company, The Ohio Casualty Company, and West American Insurance Company, and that he, as such, being authorized so to do, execute the foregoing instrument for the purposes therein contained by signing on behalf of the corporations by himself as a duly authorized officer.

IN WITNESS WHEREOF, I have hereunto subscribed my name and affixed my notarial seal at King of Prussia, Pennsylvania, on the day and year first above written.

COMMONWEALTH OF PENNSYLVANIA
Notarial Seal
Teresa Pastella, Notary Public
Upper Merion Twp., Montgomery County
My Commission Expires March 28, 2021
Member, Pennsylvania Association of Notaries

By: _____
Teresa Pastella, Notary Public

This Power of Attorney is made and executed pursuant to and by authority of the following By-laws and Authorizations of The Ohio Casualty Insurance Company, Liberty Mutual Insurance Company, and West American Insurance Company which resolutions are now in full force and effect reading as follows:

ARTICLE IV – OFFICERS: Section 12. Power of Attorney.
Any officer or other official of the Corporation authorized for that purpose in writing by the Chairman or the President, and subject to such limitation as the Chairman or the President may prescribe, shall appoint such attorneys-in-fact, as may be necessary to act in behalf of the Corporation to make, execute, seal, acknowledge and deliver as surety any and all undertakings, bonds, recognizances and other surety obligations. Such attorneys-in-fact, subject to the limitations set forth in their respective powers of attorney, shall have full power to bind the Corporation by their signature and execution of any such instruments and to attach thereto the seal of the Corporation. When so executed, such instruments shall be as binding as if signed by the President and attested to by the Secretary. Any power or authority granted to any representative or attorney-in-fact under the provisions of this article may be revoked at any time by the Board, the Chairman, the President or by the officer or officers granting such power or authority.

ARTICLE XIII – Execution of Contracts: Section 5. Surety Bonds and Undertakings.
Any officer of the Company authorized for that purpose in writing by the chairman or the president, and subject to such limitations as the chairman or the president may prescribe, shall appoint such attorneys-in-fact, as may be necessary to act in behalf of the Company to make, execute, seal, acknowledge and deliver as surety any and all undertakings, bonds, recognizances and other surety obligations. Such attorneys-in-fact subject to the limitations set forth in their respective powers of attorney, shall have full power to bind the Company by their signature and execution of any such instruments and to attach thereto the seal of the Company. When so executed such instruments shall be as binding as if signed by the president and attested by the secretary.

Certificate of Designation – The President of the Company, acting pursuant to the Bylaws of the Company, authorizes David M. Carey, Assistant Secretary to appoint such attorneys-in-fact as may be necessary to act on behalf of the Company to make, execute, seal, acknowledge and deliver as surety any and all undertakings, bonds, recognizances and other surety obligations.

Authorization – By unanimous consent of the Company's Board of Directors, the Company consents that facsimile or mechanically reproduced signature of any assistant secretary of the Company, wherever appearing upon a certified copy of any power of attorney issued by the Company in connection with surety bonds, shall be valid and binding upon the Company with the same force and effect as though manually affixed.

I, Renee C. Llewellyn, the undersigned, Assistant Secretary, The Ohio Casualty Insurance Company, Liberty Mutual Insurance Company, and West American Insurance Company do hereby certify that the original power of attorney of which the foregoing is a full, true and correct copy of the Power of Attorney executed by said Companies, is in full force and effect and has not been revoked.

IN TESTIMONY WHEREOF, I have hereunto set my hand and affixed the seals of said Companies this 3rd day of February, 2021.

By: _____
Renee C. Llewellyn, Assistant Secretary

Not valid for mortgage, note, loan, letter of credit, currency rate, interest rate or residual value guarantees.

To confirm the validity of this Power of Attorney call 1-610-832-8240 between 9:00 am and 4:30 pm EST on any business day.

Liberty Mutual SURETY

LIBERTY MUTUAL INSURANCE COMPANY

FINANCIAL STATEMENT — DECEMBER 31, 2019

Assets	
Cash and Bank Deposits	$778,754,989
*Bonds — U.S Government	2,780,808,610
*Other Bonds	12,645,608,792
*Stocks	16,385,435,431
Real Estate	235,608,378
Agents' Balances or Uncollected Premiums	6,217,983,641
Accrued Interest and Rents	102,273,390
Other Admitted Assets	11,957,106,292
Total Admitted Assets	**$51,103,579,523**

Liabilities		
Unearned Premiums		$8,007,146,482
Reserve for Claims and Claims Expense		21,532,853,787
Funds Held Under Reinsurance Treaties		507,868,920
Reserve for Dividends to Policyholders		1,143,826
Additional Statutory Reserve		125,722,000
Reserve for Commissions, Taxes and Other Liabilities		4,117,460,075
Total		**$34,292,195,090**
Special Surplus Funds	$32,768,443	
Capital Stock	10,000,075	
Paid in Surplus	10,044,978,933	
Unassigned Surplus	6,723,636,983	
Surplus to Policyholders		**16,811,384,434**
Total Liabilities and Surplus		**$51,103,579,524**

LIBERTY MUTUAL INSURANCE COMPANY INCORPORATED 1912 MASSACHUSETTS

* Bonds are stated at amortized or investment value; Stocks at Association Market Values.
The foregoing financial information is taken from Liberty Mutual Insurance Company's financial statement filed with the state of Massachusetts Department of Insurance.

I, TIM MIKOLAJEWSKI, Assistant Secretary of Liberty Mutual Insurance Company, do hereby certify that the foregoing is a true, and correct statement of the Assets and Liabilities of said Corporation, as of December 31, 2019, to the best of my knowledge and belief.

IN WITNESS WHEREOF, I have hereunto set my hand and affixed the seal of said Corporation at Seattle, Washington, this 27th day of March, 2020.

T A Mikolajewski

Assistant Secretary

LIBERTY MUTUAL INSURANCE COMPANY INCORPORATED 1912 MASSACHUSETTS

(NO TEXT ON THIS PAGE)

QUALIFICATION FORM

List previous projects completed to meet the special experience requirements for this contract. Please photocopy this form for submission of all required projects.

Name of Contractor: _IPC Resiliency Partners - CAC Industries_____

Name of Project: _____Gateway Estates Phases A,B,C, E _____

Location of Project: _____Brooklyn, NY_____

Owner or Owner's representative (Architect or Engineer) who is familiar with the work performed:

Name: _____Eric Macfarlane, P.E._____

Title:_____Deputy Commissioner_____ Phone Number: _____917-560-8139_____

Brief description of the Project completed or the Project in progress: _____

_____Street/Sewer Construction including remediation of contaminated soils_____

Was the Project performed as a prime, a subcontractor or a sub-subcontractor:_____Prime__

Amount of Contract, Subcontract or Sub-subcontract: _____$60,000,000_____

Start Date and Completion Date: _____Completed 2003-2021_____

****

Name of Contractor: _____

Name of Project: _____

Location of Project: _____

Owner or Owner's representative (Architect or Engineer) who is familiar with the work performed:

Name: _____

Title:_____ Phone Number: _____

Brief description of the Project completed or the Project in progress: _____

_____ Was

the Project performed as a prime, a subcontractor or a sub-subcontractor:_____

Amount of Contract, Subcontract or Sub-subcontract: _____

Start Date and Completion Date: _____

QUALIFICATION FORM

List previous projects completed to meet the special experience requirements for this contract. Please photocopy this form for submission of all required projects.

Name of Contractor: _IPC Resiliency Partners - CAC Industries_____

Name of Project: _____Coney Island Phase 1 - CONIS-PH1 _____

Location of Project: _____Brooklyn, NY_____

Owner or Owner's representative (Architect or Engineer) who is familiar with the work performed:

Name: _____Eric Macfarlane, P.E._____

Title:_____Deputy Commissioner_____ Phone Number: _____917-560-8139_____

Brief description of the Project completed or the Project in progress: _____

_____Street/Sewer Construction including combined sewer structures, regulator, tide gates

Was the Project performed as a prime, a subcontractor or a sub-subcontractor:_____Prime__

Amount of Contract, Subcontract or Sub-subcontract: _____$27,000,000_____

Start Date and Completion Date: _____Completed 2018_____

****

Name of Contractor: _____

Name of Project: _____

Location of Project: _____

Owner or Owner's representative (Architect or Engineer) who is familiar with the work performed:

Name: _____

Title:_____ Phone Number: _____

Brief description of the Project completed or the Project in progress: _____

_____ Was

the Project performed as a prime, a subcontractor or a sub-subcontractor:_____

Amount of Contract, Subcontract or Sub-subcontract: _____

Start Date and Completion Date: _____

QUALIFICATION FORM

List previous projects completed to meet the special experience requirements for this contract. Please photocopy this form for submission of all required projects.

Name of Contractor: _IPC Resiliency Partners - CAC Industries_____

Name of Project: _____Reconstruction of Myrtle Avenue -- HWPLZOO_____

Location of Project: _____Brooklyn, NY_____

Owner or Owner's representative (Architect or Engineer) who is familiar with the work performed:

Name: _____Eric Macfarlane, P.E._____

Title:_____Deputy Commissioner_____ Phone Number: _____917-560-8139_____

Brief description of the Project completed or the Project in progress: _____

_____Street Reconstruction including concrete flatwork with exposed aggregate_____

Was the Project performed as a prime, a subcontractor or a sub-subcontractor:_____Prime__

Amount of Contract, Subcontract or Sub-subcontract: _____$11,000,000_____

Start Date and Completion Date: _____Completed 2018_____

****

Name of Contractor: _____

Name of Project: _____

Location of Project: _____

Owner or Owner's representative (Architect or Engineer) who is familiar with the work performed:

Name: _____

Title:_____ Phone Number: _____

Brief description of the Project completed or the Project in progress: _____

_____ Was

the Project performed as a prime, a subcontractor or a sub-subcontractor:_____

Amount of Contract, Subcontract or Sub-subcontract: _____

Start Date and Completion Date: _____

QUALIFICATION FORM

List previous projects completed to meet the special experience requirements for this contract. Please photocopy this form for submission of all required projects.

Name of Contractor: _IPC Resiliency Partners - Iovino Affiliates_____

Name of Project: _____East Side Access -- CM009/CM019 _____

Location of Project: _____New York, NY_____

Owner or Owner's representative (Architect or Engineer) who is familiar with the work performed:

Name: _____MIke Pujdak_____

Title: Const Mgr Phone Number: _____917-709-0654_____

Brief description of the Project completed or the Project in progress: _____

_____Tunnel Mining, Excavation of Caverns under Grand Central Terminal _____

Was the Project performed as a prime, a subcontractor or a sub-subcontractor:_____Prime__

Amount of Contract, Subcontract or Sub-subcontract: _____$1,200,000,000_____

Start Date and Completion Date: _____March, 2015_____

****

Name of Contractor: _____

Name of Project: _____

Location of Project: _____

Owner or Owner's representative (Architect or Engineer) who is familiar with the work performed:

Name: _____

Title:_____ Phone Number: _____

Brief description of the Project completed or the Project in progress: _____

_____ Was

the Project performed as a prime, a subcontractor or a sub-subcontractor:_____

Amount of Contract, Subcontract or Sub-subcontract: _____

Start Date and Completion Date: _____

QUALIFICATION FORM

List previous projects completed to meet the special experience requirements for this contract. Please photocopy this form for submission of all required projects.

Name of Contractor: _IPC Resiliency Partners - Iovino Affiliates_____

Name of Project: _____Canarsie Tube _____

Location of Project: _____New York, NY_____

Owner or Owner's representative (Architect or Engineer) who is familiar with the work performed:

Name: _____Jimmy Ho_____

Title:_____Project CEO_____ Phone Number: _____646-252-6581 _____

Brief description of the Project completed or the Project in progress: _____

_____Rehabilitation of the Tube, construction of new substation

Was the Project performed as a prime, a subcontractor or a sub-subcontractor:_____Prime__

Amount of Contract, Subcontract or Sub-subcontract: _____$500,000,000_____

Start Date and Completion Date: Completed November 2020_____

****

Name of Contractor: _____

Name of Project: _____

Location of Project: _____

Owner or Owner's representative (Architect or Engineer) who is familiar with the work performed:

Name: _____

Title:_____ Phone Number: _____

Brief description of the Project completed or the Project in progress: _____

_____ Was

the Project performed as a prime, a subcontractor or a sub-subcontractor:_____

Amount of Contract, Subcontract or Sub-subcontract: _____

Start Date and Completion Date: _____

QUALIFICATION FORM

List previous projects completed to meet the special experience requirements for this contract. Please photocopy this form for submission of all required projects.

Name of Contractor: _IPC Resiliency Partners - Iovino Affiliates_____

Name of Project: _____MED-609 - 4 Shafts to Tunnel #3 _____

Location of Project: _____New York, NY_____

Owner or Owner's representative (Architect or Engineer) who is familiar with the work performed:

Name: _____Eric MacFarlane_____

Title:_____Deputy Comm_____ Phone Number: _____917-560-6839 _____

Brief description of the Project completed or the Project in progress: _____

_____Trunk Water Main Connections to 4 Shafts, distribution WM, sewers, street work

Was the Project performed as a prime, a subcontractor or a sub-subcontractor:_____Prime__

Amount of Contract, Subcontract or Sub-subcontract: _____$500,000,000_____

Start Date and Completion Date: Original work comp 2018, additional scope

underway_____

****

Name of Contractor: _____

Name of Project: _____

Location of Project: _____

Owner or Owner's representative (Architect or Engineer) who is familiar with the work performed:

Name: _____

Title:_____ Phone Number: _____

Brief description of the Project completed or the Project in progress: _____

_____ Was

the Project performed as a prime, a subcontractor or a sub-subcontractor:_____

Amount of Contract, Subcontract or Sub-subcontract: _____

Start Date and Completion Date: _____

QUALIFICATION FORM

Name of Contractor: _____

Name of Project: _____

Location of Project: _____

Owner or Owner's representative (Architect or Engineer) who is familiar with the work performed:

Name: _____

Title:_____ Phone Number: _____

Brief description of the Project completed or the Project in progress: _____

_____

Was the Project performed as a prime, a subcontractor or a sub-subcontractor:_____

Amount of Contract, Subcontract or Sub-subcontract: _____

Start Date and Completion Date: _____

****

Name of Contractor: _____

Name of Project: _____

Location of Project: _____

Owner or Owner's representative (Architect or Engineer) who is familiar with the work performed:

Name: _____

Title:_____ Phone Number: _____

Brief description of the Project completed or the Project in progress: _____

_____

Was the Project performed as a prime, a subcontractor or a sub-subcontractor:_____

Amount of Contract, Subcontract or Sub-subcontract: _____

Start Date and Completion Date: _____

QUALIFICATION FORM

Name of Contractor: _____

Name of Project: _____

Location of Project: _____

Owner or Owner's representative (Architect or Engineer) who is familiar with the work performed:

Name: _____

Title:_____ Phone Number: _____

Brief description of the Project completed or the Project in progress: _____

_____

Was the Project performed as a prime, a subcontractor or a sub-subcontractor:_____

Amount of Contract, Subcontract or Sub-subcontract: _____

Start Date and Completion Date: _____

****

Name of Contractor: _____

Name of Project: _____

Location of Project: _____

Owner or Owner's representative (Architect or Engineer) who is familiar with the work performed:

Name: _____

Title:_____ Phone Number: _____

Brief description of the Project completed or the Project in progress: _____

_____

Was the Project performed as a prime, a subcontractor or a sub-subcontractor:_____

Amount of Contract, Subcontract or Sub-subcontract: _____

Start Date and Completion Date: _____

QUALIFICATION FORM

Name of Contractor: _____

Name of Project: _____

Location of Project: _____

Owner or Owner's representative (Architect or Engineer) who is familiar with the work performed:

Name: _____

Title:_____ Phone Number: _____

Brief description of the Project completed or the Project in progress: _____

_____

Was the Project performed as a prime, a subcontractor or a sub-subcontractor:_____

Amount of Contract, Subcontract or Sub-subcontract: _____

Start Date and Completion Date: _____

****

Name of Contractor: _____

Name of Project: _____

Location of Project: _____

Owner or Owner's representative (Architect or Engineer) who is familiar with the work performed:

Name: _____

Title:_____ Phone Number: _____

Brief description of the Project completed or the Project in progress: _____

_____

Was the Project performed as a prime, a subcontractor or a sub-subcontractor:_____

Amount of Contract, Subcontract or Sub-subcontract: _____

Start Date and Completion Date: _____

NYC Mayor's Office of Contract Services

SCHEDULE B – M/WBE Utilization Plan

Part 1: M/WBE Participation Goals

Contract Overview (To be completed by contracting agency)

APT E-Pin# 85021B0024 FMS Project ID# SANDRESM1

Project Title INSTALLATION OF EAST SIDE C Agency PIN# 8502021RC0001C

Contracting Agency Department of Design and C Bid/Proposal Response Date FEBRUARY 8TH, 2021

Agency Address 30-30 Thomson Ave. City Long Island City State NY ZIP 11101

Contact Person Janelle Husain Title MWBE Outreach & Compliance Analyst

Telephone (718) 391-1322 Email Husainja@ddc.nyc.gov

Project Description (attach additional pages if necessary)

INSTALLATION OF EAST SIDE COASTAL RESILENCY FROM MONTGOMERY STREET TO EAST 15TH STREET TOGETHER WITH ALL WORK INCIDENTAL THERETO INCLUDING FLOOD PROTECTION SYSTEM, BOULEVARD

Bidder or proposer ☐ is required OR ☒ is not required to specifically identify the contact information of all M/WBE firms they intend to use as a subcontractor on this contract, including the M/WBE vendor name, address and telephone number in the space provided below in Part 2 Section 4.

M/WBE Participation Goals for Services

Enter the percentage amount for each category or for an unspecified Goal.

Prime Contract Industry: _____

Category and Breakdown:

Unspecified 16.00 %

Black American _____ %

Hispanic American _____ %

Asian American _____ %

Women _____ %

Total Participation Goals 16.00 % *Line 1*

Part 2: M/WBE Participation Plan

(To be completed by the bidder/proposer unless granted a full waiver, which must be submitted with the bid/proposal in lieu of this form)

Section 1: Prime Contractor Contact Information

Tax ID# Will be applied for if low Bidder FMS Vendor ID# _____

Business Name JPC Resiliency Partners Contact Person Richard Ocken

Business Address 1720 Whitestone Expwy., Suite 304 City Whitestone State NY ZIP 11357

Telephone 646-813-6770 Email rocken@mljcontracting.com

Section 3: Contractor M/WBE Utilization Plan

Please review the Notice to Prospective Contractors for more information on how to obtain credit for M/WBE participation. Check applicable box. The Proposer or Bidder will fulfill the M/WBE Participation Goals:

☐ As an M/WBE Prime Contractor that will self-perform and/or subcontract to other M/WBE firms a portion of the contract the value of which is at least the amount located on Lines 2 or 3 in the panels in Section 2, as applicable. The value of any work subcontracted to non-M/WBE firms will not be credited towards fulfillment of M/WBE Participation Goals. Please check all that apply to Prime Contractor: ☐ MBE ☐ WBE

☐ As a Qualified Joint Venture with an M/WBE partner, in which the value of the M/WBE partner's participation and/or the value of any work subcontracted to other M/WBE firms is at least the amount located on Lines 2 or 3 in the panels in Section 2, as applicable. The value of any work subcontracted to non-M/WBE firms will not be credited towards fulfillment of M/WBE Participation Goals.

☑ As a non-M/WBE Prime Contractor that will enter into subcontracts with M/WBE firms the value of which is at least the amount located on Lines 2 or 3 in the panels in Section 2, as applicable.

Section 2: M/WBE Utilization Goal Calculation

Prime Contractor Adopting Agency Participation Goals

For Prime Contractors (including Qualified Joint Ventures and M/WBE firms) adopting Agency M/WBE Participation Goals.

Total Bid/Proposal Value $ 1,272,221,100.00

multiplied by x

Total Participation Goals 16 % *(Line 1 above)*

Calculated M/WBE Participation Amount $ 203,555,376.00 *Line 2*

OR

Prime Contractor With Partial Waiver Approval Adopting Revised Participation Goals

For Prime Contractors (including Qualified Joint Ventures and M/WBE firms) adopting Revised M/WBE Participation Goals.

Total Bid/Proposal Value $ _____

multiplied by x

Total Revised Participation Goals _____ %

Calculated M/WBE Participation Amount $ _____ *Line 3*

Tax ID# Will be applied for if low Bidder

APT E-Pln# 85021B0024

Section 4: General Contract Information

What is the expected percentage of the total contract dollar value that you expect to award in subcontracts for services, regardless of M/WBE status? 30 %

Enter a brief description of the type(s) and dollar value of subcontracts for all services you plan to subcontract if awarded this contract, along with the anticipated start and end dates for such subcontracts. For each item, indicate whether the work is designated for participation by an M/WBE. Where the contracting agency's solicitation has indicated a requirement that the bidder or proposer specifically identify the contact information of all M/WBEs they intend to use on this contract, vendors must also include the M/WBE vendor name, address and telephone number in the space provided below. Use additional sheets if necessary. Please see attached

Description of Work	Start Date (MM/YY)	End Date (MM/YY)	Planned $ Amount	Designated for M/WBE Y	Designated for M/WBE N	M/WBE Vendor Name	M/WBE Address	M/WBE Telephone
1.	/	/	$	☐	☐			( ) -
2.	/	/	$	☐	☐			( ) -
3.	/	/	$	☐	☐			( ) -
4.	/	/	$	☐	☐			( ) -
5.	/	/	$	☐	☐			( ) -
6.	/	/	$	☐	☐			( ) -
7.	/	/	$	☐	☐			( ) -
8.	/	/	$	☐	☐			( ) -
9.	/	/	$	☐	☐			( ) -
10.	/	/	$	☐	☐			( ) -

Section 5: Vendor Certification and Required Affirmations

I hereby:

1. *acknowledge my understanding of the M/WBE participation requirements as set forth herein and the pertinent provisions of Section 6-129 of the Administrative Code of the City of New York ("Section 6-129"), and the rules promulgated thereunder;*
2. *affirm that the information supplied in support of this M/WBE Utilization Plan is true and correct;*
3. *agree, if awarded this Contract, to comply with the M/WBE participation requirements of this Contract, the pertinent provisions of Section 6-129, and the rules promulgated thereunder, all of which shall be deemed to be material terms of this Contract;*
4. *agree and affirm that it is a material term of this Contract that the Vendor will award the total dollar value of the M/WBE Participation Goals to certified MBEs and/or WBEs, unless a full waiver is obtained or such Goals are modified by the Agency; and*
5. *agree and affirm, if awarded this Contract, to make all reasonable, good faith efforts to meet the M/WBE Participation Goals, or if a partial waiver is obtained or such Goals are modified by the Agency, to meet the modified Participation Goals by soliciting and obtaining the participation of certified MBE and/or WBE firms.*

Signature [signature] Date 2/8/2024

Print Name Richard Ocken Title President (of MLJ-Officer in IPC)

[signature]
2/11/2024

Schedule B

East Side Coastal Resiliency		
SANDRESM1		
IPC Resiliency Partners		
Trade	Value	M/WBE
Rebar F&I	$ 12,000,000	MBE
Electrical 2nd Tier	$ 3,500,000	MBE
Field Office Set-up	$ 750,000	WBE
Park Buildings	$ 11,000,000	WBE
Building/Bridge Demolition	$ 6,000,000	MBE
Flatwork	$ 13,000,000	MBE
Landscaping	$ 18,000,000	WBE
Paint	$ 75,000	MBE
Photos	$ 600,000	WBE
Parkwork	$ 6,000,000	WBE
Play Equipment	$ 350,000	WBE
Piles	$ 30,000,000	MBE
Pest Control	$ 475,000	MBE
Sawcut	$ 300,000	MBE
Signs, Fence Rail	$ 18,000,000	MBE
Stone	$ 5,500,000	WBE
Structural Steel, Flood Barriers	$ 35,000,000	M/WBE
Synthetic Turf	$ 4,000,000	WBE
Truck and Dispose	$ 25,000,000	MBE
Vibration Monitoring	$ 600,000	WBE
Waterproofing	$ 1,500,000	MBE
Roofing	$ 100,000	MBE
Testing	$ 6,000	MBE
Misc Spoil Handling	$ 3,000,000	MBE
Asbestos Carbon Fiber	$ 2,000,000	M/WBE
MPT	$ 2,000,000	M/WBE
Environmental Disp.	$ 3,000,000	M/WBE
Security	$ 1,200,000	MBE
Community Liasson	$ 600,000	WBE
Total	$ 203,556,000	
Contract Value	$ 1,272,221,100	
Goal	16%	
Goal $	$ 203,555,376	
Surplus/(Deficit)	$ 624	

Please see revised sheet (next)

2/11/2024

2/8/2024

Tax ID# Will be applied for if low bidder

APT E-Pin # 85021B0024

Section 4: General Contract Information

What is the expected percentage of the total contract dollar value that you expect to award in subcontracts for services, regardless of M/WBE status? 32 %

Enter a brief description of the type(s) and dollar value of subcontracts for all services you plan to subcontract if awarded this contract, along with the anticipated start and end dates for such subcontracts. For each item, indicate whether the work is designated for participation by an M/WBE. Where the contracting agency's solicitation has indicated a requirement that the bidder or proposer specifically identify the contract information of all M/WBEs they intend to use on this contract, vendors must also include the M/WBE vendor name, address and telephone number in the space provided below. Use additional sheets if necessary.

	Description of Work	Start Date (MM/YY)	End Date (MM/YY)	Planned $ Amount	Designated for M/WBE Y	Designated for M/WBE N	M/WBE Vendor Name	M/WBE Address	M/WBE Telephone
1.	REBAR FURNISH AND INSTALL	03/22	07/26	$ 12,000,000.00	☒	☐	Not Required per Part 1		( ) -
2.	ELECTRICAL 2ND TIER SUB	03/22	07/26	$ 3,500,000.00	☒	☐	Not Required per Part 1		( ) -
3.	FIELD OFFICE SET-UP	03/22	07/26	$ 750,000.00	☒	☐	Not Required per Part 1		( ) -
4.	BUILDINGS	03/22	07/26	$ 11,000,000.00	☒	☐	Not Required per Part 1		( ) -
5.	DEMO BUILDINGS	03/22	07/26	$ 5,000,000.00	☒	☐	Not Required per Part 1		( ) -
6.	DEMO BRIDGES	03/22	07/26	$ 1,000,000.00	☒	☐	Not Required per Part 1		( ) -
7.	FLATWORK	03/22	07/26	$ 13,000,000.00	☒	☐	Not Required per Part 1		( ) -
8.	LANDSCAPING	03/22	07/26	$ 18,000,000.00	☒	☐	Not Required per Part 1		( ) -
9.	PAINT	03/22	07/26	$ 75,000.00	☒	☐	Not Required per Part 1		( ) -
10.	PHOTO	03/22	07/26	$ 600,000.00	☒	☐	Not Required per Part 1		( ) -
11.	PARK M/WBE	03/22	07/26	$ 6,000,000.00	☒	☐	Not Required per Part 1		( ) -
12.	PLAY GROUND EQUIPMENT	03/22	07/26	$ 350,000.00	☒	☐	Not Required per Part 1		( ) -
13.	PILES	03/22	07/26	$ 30,000,000.00	☒	☐	Not Required per Part 1		( ) -
14.	RODENT CONTROL	03/22	07/26	$ 475,000.00	☒	☐	Not Required per Part 1		( ) -
15.	SAWCUT	03/22	07/26	$ 300,000.00	☒	☐	Not Required per Part 1		( ) -
16.	SIGN/FENCE/RAIL	03/22	07/26	$ 18,000,000.00	☒	☐	Not Required per Part 1		( ) -
17.	STONE	03/22	07/26	$ 5,500,000.00	☒	☐	Not Required per Part 1		( ) -
18.	STRUCTURAL STEEL	03/22	07/26	$ 35,000,000.00	☒	☐	Not Required per Part 1		( ) -
19.	SYNTHETIC TURF	03/22	07/26	$ 4,000,000.00	☒	☐	Not Required per Part 1		( ) -
20.	TRUCK & DISPOSE	03/22	07/26	$ 25,000,000.00	☒	☐	Not Required per Part 1		( ) -
21.	VIBRATION MONITORING	03/22	07/26	$ 600,000.00	☒	☐	Not Required per Part 1		( ) -
22.	WATERPROOFING	03/22	07/26	$ 1,500,000.00	☒	☐	Not Required per Part 1		( ) -
23.	ROOFING	03/22	07/26	$ 100,000.00	☒	☐	Not Required per Part 1		( ) -
24.	TESTING	03/22	07/26	$ 6,000.00	☒	☐	Not Required per Part 1		( ) -
25.	MISCELLANEOUS SPOIL HANDLING	03/22	07/26	$ 3,000,000.00	☒	☐	Not Required per Part 1		( ) -
26.	ASBESTOS ABATEMENT FOR CARBON FIBER WRAP	03/22	07/26	$ 2,000,000.00	☒	☐	Not Required per Part 1		( ) -
27.	MPT	03/22	07/26	$ 2,000,000.00	☒	☐	Not Required per Part 1		( ) -
28.	ENVIRONMENTAL TRUCK & DISPOSE	03/22	07/26	$ 3,000,000.00	☒	☐	Not Required per Part 1		( ) -
29.	SECURITY	03/22	07/26	$ 1,200,000.00	☒	☐	Not Required per Part 1		( ) -
30.	COMMUNITY LIASON	03/22	07/26	$ 600,000.00	☒	☐	Not Required per Part 1		( ) -
31.	MARINE	03/22	07/26	$ 43,000,000.00	☐	☒	Not Required per Part 1		( ) -
32.	CARBON FIBER WRAP FOR OIL STATICS PIPE	03/22	07/26	$ 37,000,000.00	☐	☒	Not Required per Part 1		( ) -
33.	RIGID INCLUSIONS	03/22	07/26	$ 29,000,000.00	☐	☒	Not Required per Part 1		( ) -
34.	PARK	03/22	07/26	$ 10,000,000.00	☐	☒	Not Required per Part 1		( ) -
35.	PARK UTILITIES	03/22	07/26	$ 13,500,000.00	☐	☒	Not Required per Part 1		( ) -
36.	ELECTRICAL	03/22	07/26	$ 8,000,000.00	☐	☒	Not Required per Part 1		( ) -
37.	SOIL MIX	03/22	07/26	$ 9,500,000.00	☐	☒	Not Required per Part 1		( ) -
38.	WICK DRAINS	03/22	07/26	$ 9,500,000.00	☐	☒	Not Required per Part 1		( ) -
39.	SOE TUNNEL PITS	03/22	07/26	$ 8,500,000.00	☐	☒	Not Required per Part 1		( ) -
40.	PLUMBING	03/22	07/26	$ 6,000,000.00	☐	☒	Not Required per Part 1		( ) -

41.	42" TUNNEL	03/22	07/26	$	4,500,000.00	☐	☒	Not Required per Part 1	( ) -
42.	IRRIGATION SYSTEM	03/22	07/26	$	1,500,000.00	☐	☒	Not Required per Part 1	( ) -
43.	HVAC	03/22	07/26	$	1,000,000.00	☐	☒	Not Required per Part 1	( ) -
44.	SS PANELS	03/22	07/26	$	1,000,000.00	☐	☒	Not Required per Part 1	( ) -
45.	MOVABLE BARRIER	03/22	07/26	$	1,000,000.00	☐	☒	Not Required per Part 1	( ) -
46.	CATHODIC PROTECTION & TESTING	03/22	07/26	$	1,000,000.00	☐	☒	Not Required per Part 1	( ) -
47.	SAFETY SURFACES	03/22	07/26	$	1,000,000.00	☐	☒	Not Required per Part 1	( ) -
48.	ENGINEERING	03/22	07/26	$	1,000,000.00	☐	☒	Not Required per Part 1	( ) -
49.	WATERFRONT FACILITY	03/22	07/26	$	1,000,000.00	☐	☒	Not Required per Part 1	( ) -
50.	CONCRETE REPAIR	03/22	07/26	$	800,000.00	☐	☒	Not Required per Part 1	( ) -
51.	INSPECTION BOAT	03/22	07/26	$	600,000.00	☐	☒	Not Required per Part 1	( ) -
52.	MARINE BARGE	03/22	07/26	$	500,000.00	☐	☒	Not Required per Part 1	( ) -
53.	DEWATERING	03/22	07/26	$	500,000.00	☐	☒	Not Required per Part 1	( ) -
54.	SEALING	03/22	07/26	$	400,000.00	☐	☒	Not Required per Part 1	( ) -
55.	AIR/NOISE MONITORING	03/22	07/26	$	400,000.00	☐	☒	Not Required per Part 1	( ) -
56.	WATER TREATMENT	03/22	07/26	$	400,000.00	☐	☒	Not Required per Part 1	( ) -
57.	CPM	03/22	07/26	$	300,000.00	☐	☒	Not Required per Part 1	( ) -
58.	MARINE FACILITY	03/22	07/26	$	200,000.00	☐	☒	Not Required per Part 1	( ) -
59.	FITNESS EQUIPMENT	03/22	07/26	$	200,000.00	☐	☒	Not Required per Part 1	( ) -
60.	SIP FORMS	03/22	07/26	$	100,000.00	☐	☒	Not Required per Part 1	( ) -
61.	MISCELLANEOUS METALS	03/22	07/26	$	100,000.00	☐	☒	Not Required per Part 1	( ) -
62.	SHOTCRETE	03/22	07/26	$	75,000.00	☐	☒	Not Required per Part 1	( ) -
63.	HYDROSEEDING	03/22	07/26	$	50,000.00	☐	☒	Not Required per Part 1	( ) -
64.	TRAFFIC STRIPES	03/22	07/26	$	50,000.00	☐	☒	Not Required per Part 1	( ) -
65.	CLEAR & GRUBBING	03/22	07/26	$	50,000.00	☐	☒	Not Required per Part 1	( ) -
66.	PAVEMENT MARKINGS	03/22	07/26	$	50,000.00	☐	☒	Not Required per Part 1	( ) -
67.	VAC TRUCK	03/22	07/26	$	50,000.00	☐	☒	Not Required per Part 1	( ) -
68.	OH DOOR	03/22	07/26	$	25,000.00	☐	☒	Not Required per Part 1	( ) -
69.	FIRE PROTECTION	03/22	07/26	$	25,000.00	☐	☒	Not Required per Part 1	( ) -
70.	CONCRETE MONITORING	03/22	07/26	$	25,000.00	☐	☒	Not Required per Part 1	( ) -
71.	SUBTOTAL M/WBE SUBCONTRACTORS			$	203,556,000.00				
72.	SUBTOTAL OTHER SUBCONTRACTORS			$	191,900,000.00				
73.	TOTAL SUBCONTRACTORS			$	395,456,000.00				

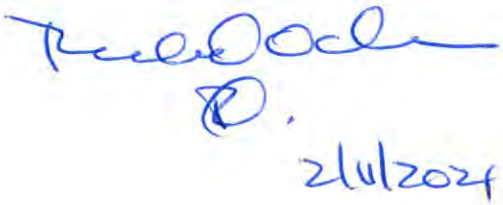

NYC Mayor's Office of Contract Services

SCHEDULE B – Part 3

Request for Waiver of M/WBE Participation Requirement

Contract Overview

Tax ID#_____ FMS Vendor ID#_____

Business Name_____ Contact Name_____

Email_____ Telephone_____

Contracting Agency_____

APT E-Pin#_____ Bid/Proposal Due Date_____

M/WBE Participation Goals for Services

Defined by AGENCY in bid/ solicitation documents
Percent of the total contract value to be subcontracted to M/WBE vendors for services and/or credited to an M/WBE Qualified Joint Venture.

Unspecified _____%
Black American _____%
Hispanic American _____%
Asian American _____%
Women _____%
Total Participation Goals _____%

Proposed by VENDOR seeking waiver
Percent of the total contract value anticipated in good faith by the bidder/ proposer to be subcontracted to M/WBE businesses for services. Or if M/WBE Qualified Joint Venture, percent of total contract value anticipated to be credited to M/WBE vendor(s).

Unspecified _____%
Black American _____%
Hispanic American _____%
Asian American _____%
Women _____%
Total Participation Goals _____%

Basis for Waiver Request: Check appropriate box & explain in detail below (attach additional pages if needed)

☐ Vendor does not subcontract services, and has the capacity and good faith intention to perform all such work itself with its own employees.

☐ Vendor subcontracts some of this type of work but at a lower % than bid/solicitation describes, and has the capacity and good faith intention to do so on this contract. Identify your subcontracting plan in the vendor certification section below.

☐ Vendor has other legitimate business reasons for proposing the M/WBE Participation Goal requested here. Explain under separate cover.

Vendor Contract History

Using the attached Excel template, list all contracts (for City and Non-City work) performed within the last 3 years and provide the requested information for each contract.

From the list of all contracts, provide reference information below for the 5 most relevant contracts in size, scale and scope (performed for New York City or any other entity) to the bid or proposal for which you are submitting this waiver request. Provide the requested information for each subcontract awarded during the life of the listed reference contract.

Please make sure to highlight the 5 reference contracts provided below among the comprehensive list of all your contract awards within the attached Excel template.

Reference 1

Agency/Organization_____ Contract #_____

Reference Contact_____ Telephone_____ Email_____

Contract Start Date _____ Contract End Date_____ Total Contract Value $_____

Prime Contract description

Did the vendor perform as a Prime Contractor or as a Subcontractor? ☒ Prime Contractor ☒ Subcontractor

Was the Prime Contract subject to any Goals? ☐ City M/WBE Goals ☐ State Goals ☐ Federal Goals ☐ No Applicable Goals

Did the Prime Contractor meet Goal requirements? ☐ Yes ☐ No ☐ N/A

If the Prime Contractor did not meet Goal requirements or contract is still ongoing, please explain

If you performed as the Prime Contractor, please provide a description and value of all work subcontracted to other vendors.

_____ $_____
_____ $_____
_____ $_____
_____ $_____
_____ $_____
_____ $_____
_____ $_____
_____ $_____

Percentage of total contract value subcontracted to other vendors _____%

If you performed as the Subcontractor, please provide a description and value of work areas you self-performed.

_____ $_____

Reference 2

Agency/Organization_____ Contract #_____

Reference Contact_____ Telephone_____ Email_____

Contract Start Date _____ Contract End Date_____ Total Contract Value $_____

Prime Contract description

Did the vendor perform as a Prime Contractor or as a Subcontractor? ☐ Prime Contractor ☐ Subcontractor

Was the Prime Contract subject to any Goals? ☐ City M/WBE Goals ☐ State Goals ☐ Federal Goals ☐ No Applicable Goals

Did the Prime Contractor meet Goal requirements? ☐ Yes ☐ No ☐ N/A

If the Prime Contractor did not meet Goal requirements or contract is still ongoing, please explain

If you performed as the Prime Contractor, please provide a description and value of all work subcontracted to other vendors.

_____ $_____

_____ $_____

_____ $_____

_____ $_____

_____ $_____

_____ $_____

_____ $_____

_____ $_____

_____ $_____

Percentage of total contract value subcontracted to other vendors _____%

If you performed as the Subcontractor, please provide a description and value of work areas you self-performed.

_____ $_____

Reference 3

Agency/Organization_____ Contract #_____

Reference Contact_____ Telephone_____ Email_____

Contract Start Date _____ Contract End Date_____ Total Contract Value $_____

Prime Contract description

Did the vendor perform as a Prime Contractor or as a Subcontractor? ☐ Prime Contractor ☐ Subcontractor

Was the Prime Contract subject to any Goals? ☐ City M/WBE Goals ☐ State Goals ☐ Federal Goals ☐ No Applicable Goals

Did the Prime Contractor meet Goal requirements? ☐ Yes ☐ No ☐ N/A

If the Prime Contractor did not meet Goal requirements or contract is still ongoing, please explain

If you performed as the Prime Contractor, please provide a description and value of all work subcontracted to other vendors.

_____ $_____

_____ $_____

_____ $_____

_____ $_____

_____ $_____

_____ $_____

_____ $_____

_____ $_____

_____ $_____

Percentage of total contract value subcontracted to other vendors _____%

If you performed as the Subcontractor, please provide a description and value of work areas you self-performed.

_____ $_____

Reference 4

Agency/Organization_____ Contract #_____

Reference Contact_____ Telephone_____ Email_____

Contract Start Date_____ Contract End Date_____ Total Contract Value $_____

Prime Contract description

Did the vendor perform as a Prime Contractor or as a Subcontractor? ☐ Prime Contractor ☐ Subcontractor

Was the Prime Contract subject to any Goals? ☐ City M/WBE Goals ☐ State Goals ☐ Federal Goals ☐ No Applicable Goals

Did the Prime Contractor meet Goal requirements? ☐ Yes ☐ No ☐ N/A

If the Prime Contractor did not meet Goal requirements or contract is still ongoing, please explain

If you performed as the Prime Contractor, please provide a description and value of all work subcontracted to other vendors.

_____ $_____

_____ $_____

_____ $_____

_____ $_____

_____ $_____

_____ $_____

Percentage of total contract value subcontracted to other vendors _____%

If you performed as the Subcontractor, please provide a description and value of work areas you self-performed.

_____ $_____

Reference 5

Agency/Organization_____ Contract #_____

Reference Contact_____ Telephone_____ Email_____

Contract Start Date_____ Contract End Date_____ Total Contract Value $_____

Prime Contract description

Did the vendor perform as a Prime Contractor or as a Subcontractor? ☐ Prime Contractor ☐ Subcontractor

Was the Prime Contract subject to any Goals? ☐ City M/WBE Goals ☐ State Goals ☐ Federal Goals ☐ No Applicable Goals

Did the Prime Contractor meet Goal requirements? ☐ Yes ☐ No ☐ N/A

If the Prime Contractor did not meet Goal requirements or contract is still ongoing, please explain

If you performed as the Prime Contractor, please provide a description and value of all work subcontracted to other vendors.

_____ $_____

_____ $_____

_____ $_____

_____ $_____

_____ $_____

_____ $_____

Percentage of total contract value subcontracted to other vendors _____%

If you performed as the Subcontractor, please provide a description and value of work areas you self-performed.

_____ $_____

Vendor Certification

Identify/list all the work areas you intend on subcontracting on the current anticipated contract for which you are submitting this waiver request.

I hereby affirm that the information supplied in support of this waiver request is true and correct, and that this request is made in good faith. I further affirm that the work that I did not list as work that will be subcontracted on this contract for which I am submitting this waiver request is work that I have performed on past contracts and will not subcontract if awarded this contract.

Signature_____ Date_____

Print Name_____ Title_____

Approvals (for Agency completion only)

ACCO Signature_____ Date_____

CCPO Signature_____ Date_____

Waiver Determination

☐ Full Waiver Approved

☐ Waiver Denied

☐ Partial Waiver Approved

Revised Participation Goal _____%

APPRENTICESHIP PROGRAM REQUIREMENTS

Bidders are advised that the Apprenticeship Program Requirements set forth below apply to each contract for which a "X" is indicated before the word "Yes". Compliance with these requirements will be determined solely by the City.

__X__ YES _____ NO

(1) Apprenticeship Program Requirements

Notice to Bidders: Please be advised that, pursuant to the authority granted to the City under Labor Law Section 816-b, the Department of Design and Construction hereby requires that the contractor awarded a contract as a result of this Invitation for Bids, and any of its subcontractors with subcontracts worth two million dollars or over, have, prior to entering into such contract or subcontract, apprenticeship agreements appropriate for the type and scope of work to be performed that have been registered with, and approved by, the New York State Commissioner of Labor. In addition, the contractor and its subcontractors will be required to show that such apprenticeship program/s have successfully passed the two year Probation period following the initial registration date of such program/s with the New York State Department of Labor.

The failure to prove, upon request, that these requirements have been met shall result in the contract not being awarded to the contractor or the subcontract not being approved.

Please be further advised that, pursuant to Labor Law Section 220, the allowable ratio of apprentices to journeypersons in any craft classification shall not be greater than the ratio permitted to the contractor as to its workforce on any job under the registered apprenticeship program.

(2) Apprenticeship Program Questionnaire

The bidder must submit a completed and signed Apprenticeship Program Questionnaire. The Questionnaire is set forth on the following pages of the Bid Booklet.

APPRENTICESHIP PROGRAM QUESTIONNAIRE ("APQ")

Bidder Name: IPC Resiliency Partners

Project ID Number SANDRESM1

The Bidder MUST complete, sign and submit this Apprenticeship Program Questionnaire with its bid.

1. Does the bidder have any Apprenticeship Program agreement(s) appropriate for the type and scope of work to be performed? (Note: Participation may be by either direct sponsorship or through collective bargaining agreement(s).)

   __x__YES _____NO

2. Has/have the bidder's Apprenticeship Program agreement(s) been registered with, and approved by the New York State Commissioner of Labor ("NYSDOL Commissioner")?

   __x__YES _____NO

3. Has/have the bidder's Apprenticeship Program successfully passed the two-year Probation period following its initial registration with the New York State Department of Labor ("NYSDOL")?

   __x__YES _____NO

If the answers to Questions 1, 2, and 3 are "Yes". The bidder shall, in the space below (and/or attached herewith where applicable), provide the contact information for such Apprenticeship Program(s) as well as information demonstrating that such Apprenticeship Program(s) have passed the two-year Probation period following its initial registration with the NYSDOL. (The bidder may attach additional pages if necessary).

- **Where the bidder directly sponsors any such apprenticeship Program(s),** the bidder shall provide the following:
  - The trade classification(s) covered by such program(s), and the date(s) such program(s) was/were approved by the NYSDOL Commissioner; and/or
  - A copy of a letter(s) from the NYSDOL, on NYSDOL's letterhead, executed by an official thereof, which verifies/verify the trade classification(s) covered by such program(s), and the date(s) such program(s) was/were approved by the NYSDOL Commissioner and the Active status of such program(s).

- **Where the bidder participates in any such Apprenticeship Program(s) through its membership in an employer organization(s) that directly sponsors such program(s) or where the employer association(s) participates in such program(s) through collective bargaining,** the bidder shall provide the following:
  - The contact information for the employer organization(s), and the apprenticeable trade(s) covered pursuant to the bidder's affiliation therewith, and the date such program(s) was/were approved by the NYSDOL Commissioner; or
  - A letter(s) from such employer organization(s), on letterhead of such organization(s), executed by an officer, delegate or official thereof, which verifies/verify the trade classification(s) covered by such program(s) was/were approved by the NYSDOL Commissioner, and that the bidder is both a member in good standing of the identified employer organization and is subject to the provisions of the Apprenticeship Program agreement(s) sponsored thereby.

APPRENTICESHIP PROGRAM QUESTIONNAIRE ("APQ")

- **Where the bidder participates in any such Apprenticeship Programs through collective bargaining agreements,** the bidder shall provide the following:
    - The contact information for such collective bargaining entity(ies) and the apprenticeable trade(s) covered pursuant to the bidder's affiliation therewith;
    - A letter(s) from such collective bargaining entity(ies), on letterhead of such entity(ies), executed by an officer, delegate or official thereof, which verifies/verify the bidder's status as a signatory/participant in good standing to such collective bargaining entity(ies) Apprenticeship Program Agreements.

Will Participate in the Local Unions Apprentice Programs

Bidder: IPC Resiliency Partners

By: _____ Title: President (of MLJ- Officer in IPC)
(Signature of Partner or Corporate Officer)

Date: Feb. 8, 2021

PROJECT REFERENCE FORMS

A. PROJECT REFERENCES – CONTRACTS COMPLETED BY THE BIDDER

List all contracts substantially completed within the last four (4) years, up to a maximum of 10 projects, in descending order of date of substantial completion.

Project & Location	Contract Type	Contract Amount ($000)	Date Completed	Owner Reference & Tel. No.	Architect/Engineer Reference & Tel. No. (if different from owner)
Installation of Elevators at Chambers Street Station Manhattan, NY	Station/ Elevators	$28,837,436	10/2020	MTA C&D Anthony J. Febrizio (516) 581-9463	MTA NYCT Eniola Adedeji (929) 463-9066
Replacement of One Hydraulic Elevator at Grand Central Station Manhattan, NY	Elevator Replacement	$5,000,000	4/2020	MTA NYCT Vikram Tadla (646) 529-8811	Naik Consulting Group Mike Cresci (917) 642-4635

B. PROJECT REFERENCES – CONTRACTS CURRENTLY UNDER CONSTRUCTION BY THE BIDDER

List all contracts currently under construction similar to the contract being awarded.

Project & Location	Contract Type	Contract Amount ($000)	Date Completed	Owner Reference & Tel. No.	Architect/Engineer Reference & Tel. No. (if different from owner)
Station Reconstruction and ADA Accessibility at Times Square and Grand Central Stations 42nd Street Shuttle Line (IRT) Manhattan, NY	Station Rehabuiliation	$140,000,000	03/22 (anticipated)	MTA NYCT Vikram Tadla (646) 529-8811	AECOM Joseph Zafonte, CCM/PM (617) 694-3043
Brooklyn Bridge Rehabilitation of Approach Arches, Towers, and Miscellaneous Rehabilitation Brooklyn, NY and Manhattan, NY	Bridge Rehabilitation	$238,300,000	12/23 (anticipated)	NYCDOT Daniel Hom, EIC (646) 235-7697	GPI William Ferdinendsen (929) 472-6203
Bronx River Greenway: Starlight Park Phase II, Stage 2 Bronx, NY	Pedestrian Bridge and Site Work	$29,715,000	12/21 (anticipated)	NYCDDC Eric Sattler, EIC (718) 391-1966	Jacobs Engineering Lambert Monah, PE (718) 391-2469
Restoration Associated with Sandy Recovery Program Coney Island Sites Brooklyn, NY	Sandy Recovery	$186,800,000	07/23 (anticipated)	NYCHA Syuin Chet Tee 929-249-7395	Jacobs Engineering Donald Trammell (678) 787-1987

C. PROJECT REFERENCES – PENDING CONTRACTS NOT YET STARTED BY THE BIDDER

List all contracts awarded to or won by the bidder but not yet started.

Project & Location	Contract Type	Contract Amount ($000)	Date Completed	Owner Reference & Tel. No.	Architect/Engineer Reference & Tel. No. (if different from owner)
George R. Vierno Center State of Good Repair Rikers Island, NY	Rehabilitation of Jail Facility	$87,000,000	N/A	NYC DOC Lilliaana Alvarez-Cano (718) 546-0686	N/A

PROJECT REFERENCE FORMS

A. PROJECT REFERENCES – CONTRACTS COMPLETED BY THE BIDDER

List all contracts substantially completed within the last four (4) years, up to a maximum of 10 projects, in descending order of date of substantial completion.

Project & Location	Contract Type	Contract Amount ($000)	Date Completed	Owner Reference & Tel. No.	Architect/Engineer Reference & Tel. No. (if different from owner)

B. PROJECT REFERENCES – CONTRACTS CURRENTLY UNDER CONSTRUCTION BY THE BIDDER - J-Track LLC

List all contracts currently under construction similar to the contract being awarded.

Project & Location	Contract Type	[illegible]	Date Completed	Owner Reference & Tel. No.	Architect/Engineer Reference & Tel. No. (if different from owner)
[illegible]	[illegible]	[illegible]	[illegible]		[illegible]
[illegible]	[illegible]	[illegible]	[illegible]		[illegible]
[illegible]	[illegible]	[illegible]	[illegible]	[illegible]	
[illegible]	[illegible]	[illegible]	[illegible]		
[illegible]	[illegible]	[illegible]	[illegible]	[illegible]	
[illegible]	[illegible]	[illegible]	[illegible]		[illegible]
[illegible]	[illegible]	[illegible]	[illegible]		

C. PROJECT REFERENCES – PENDING CONTRACTS NOT YET STARTED BY THE BIDDER - J-Track LLC

List all contracts awarded to or won by the bidder but not yet started.

Project & Location	Contract Type	[illegible]	[illegible]	Owner Reference & Tel. No.	Architect/Engineer Reference & Tel. No. (if different from owner)
[illegible]	[illegible]	[illegible]	[illegible]		[illegible]
[illegible]	[illegible]	[illegible]	[illegible]		[illegible]

PROJECT REFERENCE FORMS

A. PROJECT REFERENCES – CONTRACTS COMPLETED BY THE BIDDER -- WELKIN Mechanical

List all contracts substantially completed within the last four (4) years, up to a maximum of 10 projects, in descending order of date of substantial completion.

Project & Location	Contract Type	Contract Amount ($000)	Date Completed	Owner Reference & Tel. No.	Architect/Engineer Reference & Tel. No. (if different from owner)
NYCParks CNYG Pool Piping	Plumbing Prime	1,225,055	1/10/21	Andrew Aideyan (Parks) 718-760-6602	
PANYNJ Lincoln Tunnel - F.O. System	Fuel Oil Tanks/Pipe	2,952,000	3/17/20	Mike Murray PANYNJ 973-418-1259	
NYCT ESI Pkg. 4 5 Stations	Plumbing/ HVAC (Sub)	922,000	7/1/20	Elias Sadiq - Judlau/OHL 718-544-2320	
NYCT ESI Pkg. 8 3 Stations	Plumbing/ HVAC (Sub)	609,000	3/12/19	Jay Dier - Citnalta 631-563-1110	
NYCT - Myrtle Ave	Plumbing/ HVAC (Sub)	3,763,000	12/28/18	James Allegre-Schiavone 201-867-5070	
NYCT - Clark St. Tube Rehab	Plumbing/ HVAC (Sub)	4,900,000	11/15/20	chris Dawson TC Electric 917-732-6326	
NYCT - Flushing Main St	Plumbing/ HVAC (Sub)	605,000	3/6/19	George Sideraklis - Forte 917-577-0374	
TBTA QMT-40 Queens Midtown Tunnel	Fire Protection & Plumbing (Sub)	7,800,000	11/26/19	Elias Sadiq - Judlau/OHL 718-544-2320	

B. PROJECT REFERENCES – CONTRACTS CURRENTLY UNDER CONSTRUCTION BY THE BIDDER Welkin Mechanical

List all contracts currently under construction similar to the contract being awarded.

Project & Location	Contract Type	Contract Amount ($000)	Date Completed	Owner Reference & Tel. No.	Architect/Engineer Reference & Tel. No. (if different from owner)
NYCHA GR1904063 Coney Island Houses	Boilers/HVAC Plumbing (Sub)	$ 22,500,000		Rich Ocken MLJ 917-807-4293	
NYCDEP OH-92-Owls Head	Dechlor. Facility	$ 26,699,000		James Lavria (DEP) 718-595-6216	
NYCT - Rutgers Tube Rehab	Pumps/Pipe HVAC (sub)	$ 4,743,000		Dave Summa J-Track 646-813-6552	
NYCT - Main St Flushing - Escalators	Plumbing/ HVAC (Sub)	$ 562,500		Dave Summa J Track 646-813-6552	
NYCT - 207 St Yard Sandy Repairs	Plumbing (Sub)	$ 3,650,000		Alto Dogan CAC Ind 718-729-3600	
NYCDEP Bowery Bay WWTP - Screw Conveyors BB-237	Process Equipt	$ 3,600,000		MD Hossain (DEP) 718-595-5073	
NYC Parks - Calvert Vaux Comfort Sta-Bklyn	New Building	$ 7,870,000		Lorenzo Calabrese (Parks) 718-760-6866	
NYCDEP - REG-30 Tide Gates - Bklyn	Sewer Constr	$ 2,489,000		MD Hossain (DEP) 718-595-5073	

C. PROJECT REFERENCES – PENDING CONTRACTS NOT YET STARTED BY THE BIDDER - Welkin Mechanical

List all contracts awarded to or won by the bidder but not yet started.

Project & Location	Contract Type	Contract Amount ($000)	Date Completed	Owner Reference & Tel. No.	Architect/Engineer Reference & Tel. No. (if different from owner)
DDC/DSNY - Sanitation Garage 1,3 - Staten Is	Plumbing/ HVAC (Sub)	$ 21,599,355		Mike Vetri - Prismatic 973-822-1133 ext. 254	
DDC George Vierno Center - Rikers Is	HVAC (Sub)	$ 10,900,000		Rich Ocken MLJ 917-807-4293	
Port Washington WWTP - HVAC	HVAC (prime)	$ 452,000		Giovanna DiFiore 516-883-5900	
NYCDEP NR-44 NorthRiver WWTP	HVAC (Sub)	$ 190,000		Tom Chapman-Welsbach 917-745-7781	
NYCT - 1 Times Sq NY.	HVAC (Sub)	$ 97,000		Rich Ocken MLJ 917-807-4293	

PROJECT REFERENCE FORMS

A. PROJECT REFERENCES – CONTRACTS COMPLETED BY THE BIDDER

List all contracts substantially completed within the last four (4) years, up to a maximum of 10 projects, in descending order of date of substantial completion.

Project & Location	Contract Type	Contract Amount ($000)	Date Completed	Owner Reference & Tel. No.	Architect/Engineer Reference & Tel. No. (if different from owner)
Garvies Point Redevelopment Glen Cove, NY	Private/ Construction	$35,797,500	12/2020	RXR Glen Isle Partners Frank Haftel (516) 399-2301	PW Grosser Derek Ersback (516) 852-6750
Alexander Hamilton High Bridge Interchange Bronx, NY	Public	$138,780,000	02/2020	NYDOT Michael McCotter (646) 210-7120	STV Engineering Tom Mellett (212) 777-4400
PSE&G Plainfield Plainfield, NJ	Utilities	$19,968,486.00	11/2019	PSE&G Lou Hahn (908) 412-7255	PS&S Janos Szeman (732) 245-7164
Rockefeller University Excavation and Foundation (E&F) New York City, NY	Private/ Construction	$25,950,000	06/2017	Rockefeller University George Chandler (212) 327-8000	Thornton Tomasetti Sherry Yin (917) 661-7800
Con Edison - 11th Street Storm Hardening Queens, NY	Public	$5,975,000	03/2017	Con Edison Evan Carter (212) 461-2014	RCM Technologies Basem Yowakim basem.yowakim@rcmt.com
Jacob Javits - Transformer Building New York City, NY	Private/ Construction	$4,530,000.00	02/2017	Tishman Construction Corp of NY Glen Johnson (212) 244-1926	Langan Engineering Alan Poeppel (201) 618-0013

B. PROJECT REFERENCES – CONTRACTS CURRENTLY UNDER CONSTRUCTION BY THE BIDDER

List all contracts currently under construction similar to the contract being awarded.

Project & Location	Contract Type	Contract Amount ($000)	Date Completed	Owner Reference & Tel. No.	Architect/Engineer Reference & Tel. No. (if different from owner)
PVSC Substation M & Headworks Reconstruction Passaic Valley, NJ	Public	$102,919,150	12/2025 (anticipated)	Passaic Valley Sewerage Commission Greg Tramontozzi (973) 344-1800	Greenly and Hansen Kate Jakubowski (215)553-7901
(DB) Van Wyck Exp. Capacity & Access Imp.	Public	$342,205,557	12/2023 (anticipated)	NYS DOT Luis Aristy (646) 208-3017	Dewberry Engineers John Boule (646) 760-0273
Avalon at Harbor Isle Nassau County, NY	Private	$7,928,160	07/2021 (anticipated)	AvalonBay Communities Scott Frattenburg o - (516) 501-6020 c - (917) 229-2925	Cameron Engineering & Associates, LLP Walter Sieber (516) 827-4900
Southern Border Wall Job - RGV09 Rio Grande Valley, TX	Public	$258,085,400	04/2022 (anticipated)	USACE Amelia K. Bryant (817) 886-1045	CEC Engineering Consultants Steven M. Myers (480) 560-9979
Southern Border Wall Job- PGV08 Rio Grande Valley, TX	Public	$257,808,800	04/2022 (anticipated)	USACE Amelia K. Bryant (817) 886-1045	CEC Engineering Consultants Steven M. Myers (480) 560-9979
National Grid Fulton NAPL Barrier Wall Brooklyn, NY	Private	$24,312,301	02/2021 (anticipated)	National Grid Patrick Van Rossem (516) 545-2578	GZA Engingeers Matthew Page (401) 439-1070
Con Edison of NY, Inc. - Substation SPCC Upgrade New York , NY	Public	$76,350,305	12/2021 (anticipated)	Con Edison Cliff DiRisi (917) 769-1932	Langan Engineering Alan Poeppel (201) 618-0013
Cherry Lane & South Tyson Tiebacks Long Island, NY	Public	$7,368,702	06/2021 (anticipated)	Long Island Rail Road Joseph Tenaglia (917) 417-3708	Stantec Kenneth Rozansky (732) 547-3806
Bergen Point Outfall Suffolk County, NY	Public	$187,780,000	06/2021 (anticipated)	SCDPW Janice McGovern (631) 852-4188	CDM Smith Keith Kelly (516) 712-4297
Atlantic Yards Brooklyn, NY	Private	$274,227,937	02/2021 (anticipated)	Greenland Forest City Partner Michael Gagliardi (718) 465-5000	Parson Brinckerhoff Sean O-Gorman (212) 465-5000

C. PROJECT REFERENCES – PENDING CONTRACTS NOT YET STARTED BY THE BIDDER

List all contracts awarded to or won by the bidder but not yet started.

Project & Location	Contract Type	Contract Amount ($000)	Date Completed	Owner Reference & Tel. No.	Architect/Engineer Reference & Tel. No. (if different from owner)
Bay Park RSP Nassau County, NY	Public	$15,574,857	N/A	NCDPW Vincent Falkowski (516) 573-8800	Hazen & Sawyer Robert Pedenzin (917) 887-3462
East Side Coastal Resiliency from East 15th Street to East 25th Street Manhattan, NY	Public	$16,000,000	N/A	Perfetto (GC) James Maniscalco (347) 768-0283	N/A
HSS River Building Manhattan, NY	Private	$9,019,000	N/A	AECOM Tishman (CM) Alan Paul, PE (212) 708-6880	N/A
Resurfacing of Various County Roads - Phase 66 Nassau County, NY	Public	$4,600,000	N/A	Nassau County Rich Iadevaio (516) 571-9660	N/A
Tilcon - Port Jeff Bulkhead Suffolk County, NY	Private	$2,123,530	N/A	Tilcon Michael Kotlarz (973) 214-7447	N/A

C.A.C. INDUSTRIES, INC.
COMPLETED CONTRACTS

Print Date: 2/11/2021

Line	Project	Contract No.	Location	Contract	Contract Amnt.	Award Date	Completed	Owner	Tel. No.	Arch/Eng	Tel. No.
1	Storm Sewers in Springfield Blvd.	SE-687-A	Queens	G.C.	$ 1,575,000.00		Nov-98	D.D.C.	718-391-1903	John Pusz, P.E.	718-391-1903
2	Combined Sewers in 62nd Street	SEK-002258	Brooklyn	G.C.	$ 533,413.75		Aug-98	D.D.C.	718-780-8115	Lambert Monah, P.E.	718-780-8115
3	Storm & Sanitary Sewers in 169th Street	SEQ-200292	Queens	G.C.	$ 491,756.68		Dec-98	D.D.C.	718-391-1968	Donald Granger, P.E.	718-391-1968
4	Sanitary Sewers in 117th Rd	SEQ-002420	Queens	G.C.	$ 391,456.71		Dec-98	D.D.C.	718-391-1968	Donald Granger, P.E.	718-391-1968
5	Storm & Sanitary Sewers, Watermains & Appurtenances in 229th Street	SEQ-200295	Queens	G.C.	$ 2,722,332.51		Dec-99	D.D.C.	718-391-2273	Tom Wynne, P.E.	718-391-2273
6	Storm & Sanitary Sewers, Watermains & Appurtenances in Heberton Ave	SER-20065	Staten Island	Sub	$ 550,000.00		Sep-97	D.D.C.	718-390-5327	Medhat Hanna, P.E.	718-390-5327
7	Baisley Blvd. Including Sewers, Watermains & Street Lighting	HWQ-994	Queens	Sub	$ 1,000,000.00		Nov-97	D.D.C.	718-391-1954	Anna Pluta-Migoya, P.E.	718-391-1954
8	Storm Sewers in 58th Avenue	SEQ-200289	Queens	G.C.	$ 243,742.00		Sep-98	D.D.C.	718-391-1966	Eric Sattler, P.E.	718-391-1966
9	Sewers in 85th Avenue	SEQ-002482		G.C.	$ 672,424.89		Apr-00	D.D.C.	718-391-2273	Tom Wynne, P.E.	718-391-2273
10	Storm & Sanitary Sewers in 220th Street & Jamaica Avenue	SEQ-002478	Queens	G.C.	$ 3,104,402.31		Nov-00	D.D.C.	718-391-2273	Tom Wynne, P.E.	718-391-2273
11	Sewers in 125th Avenue	SEQ002474		G.C.	$ 2,491,158.96		Dec-00	D.D.C.	718-391-2273	Tom Wynne, P.E.	718-391-2273
12	Sutphin Blvd Area	HWQ-600C2	Queens	G.C.	$ 9,352,053.99		Oct-01	D.D.C.	718-391-1968	Donald Granger, P.E.	718-391-1968
13	Collapsed Storm, Sanitary or Combined Sewers in various locations	SEQ-00201A	Queens	G.C.	$ 3,571,618.77		Aug-01	D.D.C.	718-595-4201	Dan Lefkowitz	718-595-4201
14	Sanitary & Storm Sewers in 219th Street	SEQ-002510	Queens	G.C.	$ 5,256,628.65		May-02	D.D.C.	718-391-2273	Tom Wynne, P.E.	718-391-2273
15	Storm Sewers in Baisley Blvd	SE-745 B	Queens	G.C.	$ 5,022,345.51		May-02	D.D.C.	718-391-1968	Donald Granger, P.E.	718-391-1968
16	Sanitary Sewers in Murdock Avenue	SEQ-002514	Queens	G.C.	$ 1,409,727.96		Aug-02	D.D.C.	718-391-2273	Tom Wynne, P.E.	718-391-2273
17	Storm Sewers in Beach Channel Drive	SEQ-200358	Queens	G.C.	$ 927,658.80		Aug-02	D.D.C.	718-391-2273	Tom Wynne, P.E.	718-391-2273
18	Combined Sewers in East 89th Street	SEK-002320	Brooklyn	G.C.	$ 177,903.00		Dec-02	D.D.C.	718-391-2273	Tom Wynne, P.E.	718-391-2273
19	Storm Sewers in Beach 139th Street	SE-426C	Queens	G.C.	$ 6,545,625.39		Jun-03	D.D.C.	718-391-2273	Tom Wynne, P.E.	718-391-2273
20	Sanitary Sewers in Smith Street	SEQ-002532	Queens	G.C.	$ 4,905,099.18		Jul-03	D.D.C.	718-391-2273	Tom Wynne, P.E.	718-391-2273
21	Greenwich Street	HWMWTCA1A	Manhattan	G.C.	$ 2,145,384.00		Dec-03	D.D.C.	718-391-2273	Tom Wynne, P.E.	718-391-2273
22	89th Road	HWQ-631A	Queens	G.C.	$ 5,422,676.58	5/2/2002	Jan-04	D.D.C.	718-391-2273	Tom Wynne, P.E.	718-391-2273
23	Storm Sewers in Beach 53rd Street	SEQ-200381-R	Queens	G.C.	$ 280,615.43		Mar-04	D.D.C.	718-391-2273	Tom Wynne, P.E.	718-391-2273
24	Water Main Installation for New Building Constr & Improvement to the City's Water Main Distribution System	QED-980	Queens, Bronx	G.C.	$ 1,021,005.00		May-04	D.D.C.	718-391-2273	Tom Wynne, P.E.	718-391-2273
25	Sanitary Sewers in Daniels Street	SEQ-002488	Queens	G.C.	$ 1,215,916.60		May-04	D.D.C.	718-391-2273	Tom Wynne, P.E.	718-391-2273
26	Sanitary & Storm Sewers in 43rd Avenue	SEQ-002569	Queens	G.C.	$ 911,936.43		Jul-04	D.D.C.	718-391-2273	Tom Wynne, P.E.	718-391-2273
27	Somerville Area	HWQ-631A	Queens	G.C.	$ 15,245,464.68	5/2/2002	Mar-05	D.D.C.	718-391-2273	Tom Wynne, P.E.	718-391-2273
28	Sanitary and Storm Sewers in Collier Avenue	SEQ-002413-R	Queens	G.C.	$ 1,850,940.00		Apr-05	D.D.C.	718-391-1968	Donald Granger, P.E.	718-391-1968
29	Sanitary Sewers in 122nd Avenue	SEQ-002567	Queens	G.C.	$ 4,666,115.25		Sep-05	D.D.C.	718-391-1968	Donald Granger, P.E.	718-391-1968
30	Edgemere Urban Renewal Area Phase I	HD-153B	Queens	G.C.	$ 6,436,325.09		Sep-05	D.D.C.	718-391-1968	Donald Granger, P.E.	718-391-1968
31	Reconstruction of Reads Lane	HWQ230G-R	Brooklyn	G.C.	$ 6,537,998.25		Sep-05	D.D.C.	718-391-1968	Donald Granger, P.E.	718-391-1968
32	Collapsed or Defective Sanitary, Storm and Combined Vitrified Clay pipe Sewers	SEX00201P	Bronx	G.C.	$ 3,438,710.96		May-06	D.E.P.	718-595-4200	Dan Lefkowitz	718-595-4200
33	Collapsed or Defective Sanitary, Storm & Combined Vitrified Clay pipe Sewers	SEQ0201B2	Queens	G.C.	$ 4,689,808.39		May-06	D.E.P.	718-595-4200	Dan Lefkowitz	718-595-4200
34	Sanitary & Storm Sewers & Installation of Water Mains in 167th Street	SEQ-002574	Queens	G.C.	$ 4,965,952.50		Jun-07	D.D.C.	718-391-1968	Donald Granger, P.E.	718-391-1968
35	Collapsed or Otherwise Defective Sanitary, Storm & Vitrified Clay Pipe Sewers	SEQ0201B3	Queens	G.C.	$ 4,143,865.40		Apr-07	D.E.P.	718-595-4200	Dan Lefkowitz	718-595-4200
36	Collapsed, Defective Sanitary, Storm and Combined Vitrified Clay Pipe Sewers	SEX00201Q	Bronx	G.C.	$ 3,204,358.27		Apr-07	D.E.P.	718-595-4200	Dan Lefkowitz	718-595-4200
37	Combined Sewer in Seymour Ave	SEX002251	Bronx	G.C.	$ 3,545,973.00	12/21/2015	Sep-07	D.D.C.	718-391-2273	Tom Wynne, P.E.	718-391-2273
38	Sanitary Sewers in Hoda Place	SER-002235-R	Staten Island	G.C.	$ 1,639,099.89		Aug-07	D.D.C.	718-391-2273	Tom Wynne, P.E.	718-391-2273
39	Edgemere Urban Renewal Area Phase II	HD-153B1	Queens	G.C.	$ 17,221,197.24		Sep-07	D.D.C.	718-391-1968	Donald Granger, P.E.	718-391-1968
40	Installation of Water Mains & Reconstruction of Combined Sewers in Richmond Road	RED-354	Staten Island	G.C.	$ 20,315,957.76	2/28/2003	Dec-07	D.D.C.	718-391-2273	Tom Wynne, P.E.	718-391-2273
41	Gateway Estates Area Phase 1A	HD-161	Brooklyn	G.C.	$ 17,445,456.27	5/12/2004	Mar-08	D.D.C.	718-391-2273	Tom Wynne, P.E.	718-391-2273
42	Reconstruction of Gateway Estates Area Phase 1A	HD-161	Brooklyn	G.C.	$ 11,378,826.00	5/12/2004	Nov-08	D.D.C.	718-391-2273	Tom Wynne, P.E.	718-391-2273
43	Collapsed or Defective Cement Pipe & Combined Sewers in Various Locations	SE-166-B4	Brooklyn	G.C.	$ 4,178,068.70	1/29/2008	Mar-09	D.E.P.	718-595-4200	Dan Lefkowitz	718-595-4200

Line	Project	Contract No.	Location	Contract	Contract Amnt.	Award Date	Completed	Owner	Tel. No.	Arch/Eng	Tel. No.
44	Collapsed or Defective Cement Pipe & Combined Sewers in Various Locations	SE-166-B5	Brooklyn	G.C.	$ 4,174,464.15	2/23/2009	Mar-10	D.E.P.	718-595-4200	Dan Lefkowitz	718-595-4200
45	Reconstruction of 99th, 104th and 110th Avenues , Queens	HWQ1161	Queens	G.C.	$ 59,545,262.70		Dec-10	D.D.C.	718-391-1968	Donald Granger, P.E.	718-391-1968
46	Rehabilitation of Step Streets at West 176th and West 230th Streets	HWXS211V2	Bronx	G.C.	$ 3,488,663.36	3/10/2008	Dec-10	D.D.C.	(718) 365-2106	Joe Cassidy, P.E.	718-365-2106
47	Reconstruction of Harrison Street, etc. Manhattan	HWMWTCA7A	Manhattan	G.C.	$ 13,358,600.51	5/4/2009	Nov-10	D.D.C.	212-442-7990	Ashwinkumar Patel, P.E.	212-442-7990
48	Collapsed or Defective Cement Pipe & Combined Sewers in Various Locations	SE-166-B6	Brooklyn	G.C.	$ 3,965,926.77	3/23/2010	May-11	D.E.P.	718-595-4200	Dan Lefkowitz	718-595-4200
49	Highline Reconstruction (Section 2)	16230008	Queens	G.C.	$ 36,714,323.00		Jul-11	E.D.C.	212-3123743	Len Greco, P.E.	212-3123743
50	Sanitary & Storm and Appurtenances in 89th Ave	SEQ002658	Queens	G.C.	$ 1,898,354.25	5/13/2010	Dec-11	D.D.C.	718-391-1968	Donald Granger, P.E.	718-391-1968
51	Storm and Combined Sewers in Fairfax Avenue between Waterbury Ave & Fairmount Avenue	SEX20039	Bronx	G.C.	$ 2,245,311.00	4/27/2010	Dec-11	D.D.C.	718-365-2106	Joe Cassidy, P.E.	718-365-2106
52	Storm Sewer & Outfall in B. 42nd St b/w B. Channel Drive & the U.S. Bulkhead Line	SEQ200533	Queens	G.C.	$ 5,277,781.60	6/9/2009	Jun-12	D.D.C.	718-391-1968	Donald Granger, P.E.	718-391-1968
53	Combined Sewers and Appurtenances in 26th Avenue between 154th Street & 157th Street	SEQ002587	Queens	G.C.	$ 1,496,484.00	2/17/2011	Jun-12	D.D.C.	718-391-1968	Donald Granger, P.E.	718-391-1968
54	East Fordham Rd from Southern Blvd to the Ramps of the Bronx River Parkway	HWXP134	Bronx	G.C.	$ 11,421,586.26	7/13/2010	Dec-13	D.D.C.	917-939-6966	Lambert Monah, P.E.	917-939-6966
55	Reconstruction of Bronx & Pelham Pkwy East Bound & Pelham Pkwy South	HWX710	Bronx	G.C.	$ 36,165,168.80	5/12/2010	Arp-14	D.D.C.	917-939-6966	Lambert Monah	917-939-6966
56	Collapsed or Otherwise Defective Sanitary, Storm Sewers	SEX00201W	Bronx	G.C.	$ 4,554,306.44	6/28/2012	Arp-14	D.D.C.	917-939-6966	Lambert Monah	917-939-6966
57	McDonald's USA, LLC - 91-18 Beach Cahnnel Drive New sidewaks, Parking lot pavemen	PO 968093	Queens	G.C.	$ 75,896.00	9/25/2014	Dec.9, 2014	McDonald's USA	732-623-8528	Julie Andrews	732-623-8528
58	West End Avenue Pipe Enhancement	PO 4277008	Manhattan	G.C.	$ 925,390.00	1/22/2014	5/25/2014	Con Edison	212-460-2768	Jill Kerschensteiner	212-460-2768
59	World Trade Center - WTC Street, Utilities & Related Infrastructure - Phase I	WTC-342.287	Manhattan	G.C.	$ 9,057,261.78		14-Sep	Port Authority	212-435-5151	Trevor Wright	212-435-5151
60	Con Edison 55 Palmer Avenue Vault Construction on Piles	PO 4443377	Bronxville	G.C.	$ 365,364.00	12/12/2014	1/15/15	Con Edison	914-789-6098	Patrick McTague	914-789-6098
61	Regulator Station (GR-115)	PO 4516377	Manhattan	G.C.	$ 840,000.00	4/21/2015	1/15/15	Con Edison	212-460-6265	David Blaut	212-460-6265
62	Gas Regulator GR-78 at 147th Street	PO GR-78	Bronx	G.C.	$ 1,365,364.98	6/10/2015	1/15/15	Con Edison	212-460-6265	David Blaut	212-460-6265
63	28th Street Cable Yard Paving	PO 45527777	Manhattan	G.C.	$ 234,000.00	5/8/2015	1/15/15	Con Edison	212-460-6265	David Blaut	212-460-6265

C.A.C. INDUSTRIES, INC.
COMPLETED CONTRACTS
(CLOSE OUT PHASE)

Print Date: 2/11/2021

Project	Contract No.	Location	Contract	Contract Amnt.	Subcontracted	Uncompleted	Complete	Owner	Tel. No.	Arch/Eng.	Tel. No.		Year
Steam Structures and Improvements	PO 4331350	Manhattan	G.C.	$ 7,809,856.00	$ 390,492.80	$ -	Work Done	Con Edison	212-460-6265	David Blant	212-460-6265		14
Manhattan Dead Gas Main and Service Installation and Gas Trenching	4323066	Manhattan	G.C.	$ 25,638,400.00	$ 1,281,920.00	$ -	Work Done	Con Edison	212-460-6265	David Blaut	212-460-6265		14
Wadsworth Terrace from 190th St to Fairview Avenue	HWMP2017	Manhattan	G.C.	$ 2,321,534.16	$ 464,306.83	$ -	Work Done	DDC	212-442-1890	Shahram Jaromi	212-442-1890		14
Con Ed Manhattan Turnkey Gas Pilot for Cuts and Caps	PO 4368386	Manhattan	G.C.	$ 2,769,000.00	$ 138,450.00	$ -	Work Done	Con Edison	212-460-6265	David Blaut	212-460-6265		14
Pipe Enhancement Harlem River Drive II		Manhattan	G.C.	$ 8,287,168.00	$ -	$ -	Work Done	Con Edison	212-894-9397	Adama Ottera	64567723985		16
Sidewalks , Pedestrian Ramps	HWP14MLM	Manhattan	G.C.	$ 4,723,241.00	$ 472,324.10	$ -	Work Done	DDC	212-442-1890	Shahram Jaromi	212-442-1890		16
World Trade Center - WTC Street, Utilities & Related Infrastructure - Phase I	WTC-342.287	Manhattan	G.C.	$ 9,057,261.78	$ 98,000.00	$ -	Work Done	Port Authority	212-435-5151	Trevor Wright	212-435-5151		10
Installation of Trunk Mains & Appurtenances in Hudson Street	MED-596	Manhattan	G.C.	$ 59,494,197.13	$ 462,000.00	$ -	Work Done	DDC	212-442-7283	Srini Keshava	212-442-7283		10
Select Bus Service at Nostarnd Avenue & Rogers Avenue	HWK1130A	Brooklyn	G.C.	$ 14,945,698.98	$ 422,000.00	$ -	Work Done	DDC	718-391-2273	Tom Wynne, P.E.	718-391-2273		12
Gateway Estates Area, Phase C	HD-161C	Brooklyn	G.C.	$ 12,787,621.65	$ 369,000.00	$ -	Work Done	DDC	718-391-2273	Tom Wynne, P.E.	718-391-2273		12
Storm & Sanitary Sewers & Trunk Mains, Hart Place & Coney Island Creek	CONISPH01	Brooklyn	G.C.	$ 27,721,963.89	$ 876,000.00	$ -	Work Done	DDC	718-391-2273	Tom Wynne, P.E.	718-391-2273		12
Myrtle Avenue from Hall Street to Emerson Place	HWPLZ001K	Brooklyn	G.C.	$ 5,861,333.79	$ 351,680.00	$ -	Work Done	DDC	718-391-1937	Robert Yueh,P.E.	718-391-1937		13
Church Ave Sidewalk and Neckdowns	HWKP2027	Brooklyn	G.C.	$ 7,870,012.83	$ 1,967,503.21	$ -	Work Done	DDC	718-391-1937	Robert Yueh,P.E.	718-391-1937		15
Installation of Trunk Water Main in Beach 94th Street	QED-983	Queens	G.C.	$ 24,372,688.50	$ 2,151,257.05	$ -	Work Done	DDC	718-391-1968	Donald Granger, P.E.	718-391-1968		10
Horrace Mann School	Subcontract	Bronx	Sub	$ 525,000.00	$ -	$ -	Work Done	Private	Private	Private	Private		18
Sanitary & Storm Sewers and Appurtenances in Beach 29th Street	SE-817	Queens	G.C.	$ 37,911,609.00	$ 4,104,482.00	$ -	Work Done	D.D.C.	718-391-1968	Donald Granger, P.E.	718-391-1968		11
Sanitary & Storm Sewers and Appurtenances in Chandler Street	SE-795	Queens	G.C.	$ 22,584,369.29	$ 1,512,005.00	$ -	Work Done	DDC	718-391-1968	Donald Granger, P.E.	718-391-1968		11
Watermain Replacement at Various Locations 108th to 129th Streets	QED1003	Qneens	G.C.	$ 9,123,131.61	$ 1,824,626.32	$ -	Work Done	DDC	718-391-1958	Pat Larkin	718-391-1958		14
Services of Backhoe Loader with Operating Engineer Region 3	BHOE-14-3Q	Queens	G.C.	$ 3,545,226.00	$ -	$ -	Work Done	DEP	718-595-5262	Rick Nelson	718-595-5262		14
Storm and Sanitary Sewers - 73rd Avenue btw 73rd St and 260th St	SEQ200538	Queens	G.C.	$ 9,321,850.08	$ 1,398,277.51	$ -	Work Done	DEP	718-595-5262	Pat Larkin	718-391-1958		15
Roadway Improvements in Shore Road from 36th Ave to West Drive	HWQ985	Queens	G.C.	$ 7,474,069.38	$ 1,494,813.88	$ -	Work Done	DDC	917-939-6966	Lambert Monah	917-939-6966		14
Queens Centers for Progress	XXXX	Queens	G.C.	$ 1,620,000.00	$ 162,000.00	$ -	Work Done	UCP of Queens	516-378-2064	Neil Strandberg	516-378-2064		14
New Combined Sewers in Calamus Avenue and 69th Street in Woodside, Queens	SE 814	Queens	G.C.	$ 24,472,947.98	$ 4,894,589.60	$ -	Work Done	DDC	718-391-1968	Donald Granger, P.E.	718-391-1968		13
Rockaway Beach Blvd Watermain Work	10-094-02	Queens	Sub	$ 720,000.00	$ -	$ -	Work Done	EDC	sandrich@grace	Steve Andrich	sandrich@graceind		15
Collapsed Sewers (ESVP)	SEQ201BN8	Queens	G.C.	$ 8,661,116.07	$ 866,111.61	$ -	Work Done	DDC	718-780-8115	Donald Granger, P.E.	718-780-8115		16
Thursby Avenue, Ph II	HWQ631B1	Queens	G.C.	$ 41,544,348.39	$ 35,000.00	$ -	Work Done	DDC	718-391-1968	Donald Granger, P.E.	718-391-1968		8
Rehabilitation of College Point Blvd & Reconstruction of 32nd Ave	HWQ1675	Queens	G.C.	$ 12,454,452.00	$ 218,000.00	$ -	Work Done	DDC	718-391-1968	Donald Granger, P.E.	718-391-1968		10
Edenwald Houses North - On Site Stormwater Management Practices	GXHP 24-03	Queens	G.C.	$ 3,580,934.00	$ 1,253,326.90	$ -	Work Done	DEP	718-595-3950	Walid Harrouch	718-595-3950		14
Safe Routes to Transit, Phase IV White Plains Rd at Allerton Ave	HWSRT2009	Bronx	G.C.	$ 1,831,140.09	$ 366,228.02	$ -	Work Done	DDC	917-939-6966	Lambert Monah	917-939-6966		14
Combined and Storm Sewers in Commerce Ave	SEX20043	Bronx	G.C.	$ 4,190,156.46	$ 194,000.00	$ -	Work Done	DDC	917-939-6966	Lambert Monah	917-939-6966		12
Collapsed Sewers Various Locations - Bronx	SEX00201Z	Bronx	G.C.	$ 3,782,309.58	$ 310,000.00	$ -	Work Done	DEP	718-595-5262	M. Snllivan -DEP	718-595-6853		15
Rehab Interceptor Sewer	SEX002257	Bronx	SUB	$ 1,821,168.00	$ 182,116.80	$ -	Work Done	DDC	201-784-1034	EnTech	201-784-1034		15

C.A.C. INDUSTRIES, INC.
COMPLETED CONTRACTS
(CLOSE OUT PHASE)

Print Date: 2/11/2021

Con Ed Bronx Turnkey Gas Pilot for Cut and Caps	PO 4367127	Bronx	G.C.	$ 7,182,000.00	$ -	$ -	Work Done	Con Edison	212-460-6265	David Blaut	212-460-6265	14
Collapsed Sewers	SEX0201ZA	Bronx	G.C.	$ 5,817,635	$ 581,763	$ -	Work Done	DEP	718-595-5620	Michael Sullivan	718-595-5620	16
Bailey Place Retaining Wall, etc.	RWX003	Bronx	G.C.	$ 5,155,388.10	$ 750,000.00	$ -	Work Done	DDC	917-939-6966	Lambert Monah	917-939-6966	10
Replacement of Existing Water Siphons between Brooklyn and Staten Island	GE 343	Brooklyn / SI	Sub	$ 37,400,000.00	$ 1,870,000.00	$ -	Punch List	NYCEDC	(347) 291-8460	Thomas Bowers	(347) 291-8460	11
Edenwald Houses South - On Site Stormwater Management Practices	GXHP 24-04	Queens	G.C.	$ 3,735,666.00	$ 1,307,483.10	$ -	Work Done	DEP	718-595-3950	Walid Harrouch	718-595-3950	15
Test Pits and Holes at Various Locations	C-39011	All Boroughs	G.C.	$ 4,564,530.00	$ 912,906.00	$ -	Work Done	MTA	646-252-6259	Mohammed Hoque	646-252-4854	14
Distribution Water Main Extension and Replacement	GE356	All Boroughs	G.C.	$ 5,871,591.90	$ 1,174,318.38	$ 50,000.00	Possible CO Work	DDC	718-391-1958	Pat Larkin	718-391-1958	15
Hudson Rail Yards - W 33rd St	HWM1683	Manhattan	Sub	$ 17,060,500	$ 3,000,000	$ -	Work Done	Related Co.	800-829-6531	Tectonic	800-829-6531	15
Bronx Repair IV - Collapsed Sewers	SEX0201ZB	Bronx	G.C.	$ 7,781,784.57	$ 1,167,267.69	$ -	Work Done	DEP	718-595-5620	Michael Sullivan	718-595-5620	18
Safe Routes to Schools	HWSCSCH3MM	Queens	G.C.	$ 3,671,964	$ 367,196	$ -	Work Done	DDC	718-391-1937	Robert Yueh,P.E.	718-391-1937	14
Route 9A Bikeway Security	D263820	Manhattan	G.C.	$ 6,074,055	$ 1,275,552	$ -	8/30/19	NYSDOT	718-482-4722	Pankaj Patel	718-482-4722	18
Stanton Court - Sheepshead Bay	Subcontract	Brooklyn	Sub	$ 8,650,000	$ 2,162,500	$ -	1/31/20	RBBC	romskig@gmail	Gerald Romski	romskig@gmail	18
SUNY Old Westbury Emergency Field Hospital	tbd	tbd	tbd	$ 9,652,313.00	tbd	$ -	Work Done	ACOE	tbd	tbd	tbd	20
Storm & Sanitary Sewers- New Haven Blvd	SEQ200524	Queens	G.C.	$ 16,421,869	$ 1,705,908	$ -	Work Done	DDC	718-391-1958	Pat Larkin	718-391-1958	15
Combined Sewers in 74th St (Penelope)	SEQ002693	Queens	G.C.	$ 22,131,638	$ 4,426,328	$ 5,000	Possible Punch List	DDC	718-391-1958	Pat Larkin	718-391-1958	14
Willets Point Test Pits	170197620	Queens	G.C.	$ 589,500	$ 75,000	$ -	Work Done	Related	914-584-9612	Langan	212-479-5443	20
India Street Sewer	Subagreement	Brooklyn	Sub	$ 347,959	$ 20,000.00	$ -	Work Done	Siteworks	646-864-3897	Langan	646-864-3897	20
Harold Structures	Subagreement	Queens	Sub	$ 360,000	$ 20,000.00	$ 1,000	Possible Punch List	Skanska USA	917-731-5876	GEC		20
WaterMain	BEDA002	Brooklyn	G.C.	$ 18,821,967	$ 1,882,197	$ 1,000	Possible Punch List	DDC	718-391-1937	Robert Yueh,P.E.	718-391-1937	16
Warren and John Streets	HWMWTCA7F	Manhattan	G.C.	$ 23,366,399	$ 3,754,633	$ 5,000	11/30/20	DDC	212-442-1890	Shahram Jaromi	212-442-1890	16
Worth Street Paving	HWMWTCA7E	Manhattan	Sub	$ 600,000	$ -	$ 1,000	TBD	DDC	914-777-0194	Ian Petrillo-MFM	914-777-0194	
Pedestrain Safety - Multi-Sites	HWPEDSF3A	CityWide	G.C.	$ 6,331,389	$ 1,528,780	$ 5,000	11/30/20	DDC	212-313-3558	John Delucia	212-313-3558	16

C.A.C. INDUSTRIES, INC.
ACTIVE CONTRACTS

Print Date: 2/11/2021

	Project	Contract No.	Location	Contract	Contract Amnt.	Subcontracted	Uncompleted	Complete	Owner	Tel. No.	Arch/Eng.	Tel. No.
						as of latest Wed Reports						
1	Ped Ramps at MTA Facilities	HWP15XMTA	Manhattan	G.C.	$ 7,431,926	$ 872,683	$ 175,000	11/7/21	DDC	212-442-1890	Shahram Jaromi	212-442-1890
2	Gateway E	HD161E	Brooklyn	G.C.	$ 24,221,583	$ 6,055,396	$ 4,000,000	11/23/21	DDC	718-391-1937	Robert Yueh,P.E.	718-391-1937
3	Water Meters at JFK II	NYCDEP-JFK-12	Queens	G.C.	$ 8,586,000	$ 1,087,184	$ 5,893,771	12/31/21	DEP	718-595-4217	Ovi Pena	646-413-2564
4	Watermains 33rd Ave - 72 Inch Trunk WM	QED-991	Queens	G.C.	$ 62,521,672	$ 15,630,418	$ 18,000,000	6/26/21	DDC	718-391-2469	Lambert Monah	718-391-2469
5	Storm and Combined Sewers in 229th St.	SE823	Queens	G.C.	$ 72,721,954	$ 18,180,489	$ 30,000,000	7/28/21	DDC	718-391-2045	Adwait Das	718-391-2045
6	Pelham Parkway Phase II	HWPLZ011K	Bronx	G.C.	$ 115,271,100	$ 23,054,220	$ 29,000,000	3/31/23	DDC	718-391-2469	Lambert Monah	718-391-2469
7	Rehabilitation of Grand Concourse Bridge over Metro North Railroad Hudson Line	HBX1190	Bronx	G.C.	$ 44,951,400	$ 15,732,990	$ 42,900,000	1/15/23	NYCDOT	718-704-8787	Dhiaa	718-704-8787
8	Bronx Repair V	SEX02012C	Bronx	G.C.	$ 13,127,901	$ 3,281,975	$ 6,700,000	6/15/22	NYCDEP	718-595-4555	Daniel Martine	718-595-4555
9	NYCT 207th St. Yard Sewer Relocation	C-34869	Manhattan	G.C.	$ 95,400,000	$ 33,390,000	$ 88,000,000	2/27/24	NYCT	646-252-4066	Richard DeCurtis	646-252-4066
	Gas Related Contracts											
1	Bronx/Queens Gas Major Projects	PO 4885539	Bx/Queens	G.C.	$ 23,000,000.00	$ 1,150,000.00	$ 4,000,000.00	5/1/2022	David Blaut	212-460-6265	17-604	
2	Bronx Gas Mains and Services	PO 4887798	Bronx	G.C.	$ 85,000,000.00	$ 4,250,000.00	$ 45,000,000.00	6/30/2023	David Blaut	212-460-6265	17-430	
3	Manhattan Gas Turnkey 2020	20-103	Manhattan	G.C.	$ 123,000,000.00	$ 6,150,000.00	$ 120,000,000.00	09/09/23	Con Edison	212-894-9397	Cherno Cham	212-894-9397
4	Gas Subcontract with Arben Group - Bridges over Midlane Avenue	Subcontract	Westchester	G.C.	$ 380,516.40	$ -	$ 90,000	3/30/22	Arben			
5	Gas Horizontal Directions Drilling	BPA5494282	Westchester	G.C.	$ 4,900,000.00	$ 2,450,000.00	$ 4,500,000.00	04/15/23	Con Edison	212-460-6265		
6	Corroded Sleeve Contract	TBD	Various	G.C.	$ 28,000,000.00	$ -	$ 28,000,000.00	05/01/24	Con Edison		Final scope under review by ConEd	

C.A.C. INDUSTRIES, INC.

PENDING CONTRACTS NOT YET STARTED BY THE BIDDER

Print Date: 2/11/2021

Line	Project	Contract No.	Location	Contract	Contract Amnt.	Subcontracted	Uncompleted	Complete Date	Owner	Tel. No.	Arch/Eng.	Tel. No.
1	Trunk Watermain - 48" - East New York Avenue	BED776	Brooklyn	G.C.	$ 77,221,635	TBD	$ -	TBD	NYCDDC	TBD	TBD	TBD

(NO TEXT ON THIS PAGE)

SAFETY QUESTIONNAIRE

The Bidder must include, with its bid, all information requested on this Safety Questionnaire. Failure to provide a completed and signed Safety Questionnaire at the time of bid opening may result in disqualification of the bid as non-responsive. This Safety Questionnaire will be reviewed as per Section V of the Safety Requirements for Construction Contracts, found in Volume 2 of the Contract.

1. Bidder Information:

Company Name: MLJ Contracting Corp

DDC Project Number: SANDRESM1

Company Size: ☐ Ten (10) employees or less

☒ Greater than ten (10) employees

Company has previously worked for DDC: ☒ YES ☐ NO

2. Type(s) of Construction Work:

Identify the types of work that the Bidder has performed in the last three years, and the types of work that are part of this Contract.

TYPE OF WORK	LAST 3 YEARS	THIS PROJECT
General Building Construction	☐	☐
Residential Building Construction	☐	☐
Nonresidential Building Construction	☐	☐
Heavy Construction, except building	☒	☒
Highway and Street Construction	☒	☒
Heavy Construction, except highways	☒	☒
Plumbing, Heating, HVAC	☐	☐
Painting and Paper Hanging	☐	☐
Electrical Work	☐	☐
Masonry, Stonework and Plastering	☐	☐
Carpentry and Floor Work	☐	☐
Roofing, Siding, and Sheet Metal	☐	☐
Concrete Work	☒	☒
Specialty Trade Contracting	☐	☐
Asbestos Abatement		
Other (specify) _____	☐	☐

3. Experience Modification Rate:

The Experience Modification Rate (EMR) is a rating generated by the National Council of Compensation Insurance (NCCI). This rating is used to determine the contractor's premium for worker's compensation insurance. The Bidder / Contractor may obtain its EMR by contacting its insurance broker or the NCCI. If the Bidder cannot obtain its EMR, it must submit a written explanation as to why.

The Bidder must indicate its Intrastate and Interstate EMR for the past three years. [Note: For contractors with less than three years of experience, the EMR will be considered to be 1.00].

YEAR	INTRASTATE RATE	INTERSTATE RATE
2021	.75	N/A
2020	.91	N/A
2019	1.00	N/A

2. 2018 1.00 N/A

If the Intrastate and/or Interstate EMR for any of the past three years is greater than 1.00, the Bidder / Contractor must attach, to this questionnaire, a written explanation for the rating and identify what corrective action was taken to correct the situation resulting in that rating.

4. OSHA Information:

☐ YES ☒ NO Contractor has received a willful violation issued by OSHA or a New York City Department of Buildings (NYCDOB) construction-related violation within the last three years.

☐ YES ☒ NO Contractor has had an incident requiring OSHA notification within 8 hours (all work-related fatalities) or an incident requiring OSHA notification within 24 hours (work-related in-patient hospitalization, amputation and all loss of an eye).

The OSHA Form 300 "Log of Work-Related Injuries and Illnesses" and OSHA Form 300A "Summary of Work-Related Injuries and Illnesses" must be submitted for the last three years for Contractors with more than ten employees.

The Bidder / Contractor must indicate the total number of hours worked by its employees, as reflected in payroll records for the past three (3) years.

The Bidder / Contractor must submit the Incident Rate for Lost Time Injuries (the Incident Rate) for the past three (3) years. The Incident Rate is calculated in accordance with the formula set forth below. For each given year, the total number of incidents is the total number of non-fatal injuries and illnesses reported on the OSHA Form 300 and OSHA Form 300A. The 200,000 hours represents the equivalent of 100 employees working forty hours a week, fifty (50) weeks per year.

Incident Rate = $\frac{\text{Total Number of Incidents X 200,000}}{\text{Total Number of Hours Worked by Employees}}$

YEAR	TOTAL NUMBERS OF HOURS WORKED BY EMPLOYEES	INCIDENT RATE
2020	225,250	4.4
2019	66,540	3.0
2018	8,231	0

If the Bidder's / Contractor's Incident Rate for any of the past three years is one point higher than the Incident Rate for the type of construction it performs (listed below), the Bidder / Contractor must attach, to this questionnaire, a written explanation for the relatively high rate.

General Building Construction	8.5
Residential Building Construction	7.0
Nonresidential Building Construction	10.2
Heavy Construction, except building	8.7
Highway and Street Construction	9.7
Heavy Construction, except highways	8.3
Plumbing, Heating, HVAC	11.3
Painting and Paper Hanging	6.9
Electrical Work	9.5
Masonry, Stonework and Plastering	10.5
Carpentry and Floor Work	12.2
Roofing, Siding, and Sheet Metal	10.3
Concrete Work	8.6
Specialty Trade Contracting	8.6

5. Safety Performance on Previous DDC Project(s)

☐ YES ☒ NO Fatality or an incident requiring OSHA notification within 24 hours (work-related in-patient hospitalization, amputation and all loss of an eye) on DDC Project(s) within the last three (3) years.

DDC Project Number(s): _____, _____, _____

The Bidder hereby affirms that all the information provided in this Safety Questionnaire and all additional pages and/or attachments, if applicable, consist of accurate representations.

Date: Feb. 8, 2021 By: _____
(Signature of Bidder: Owner, Partner, Corporate Officer)

Title: President

SAFETY QUESTIONNAIRE

The Bidder must include, with its bid, all information requested on this Safety Questionnaire. Failure to provide a completed and signed Safety Questionnaire at the time of bid opening may result in disqualification of the bid as non-responsive. This Safety Questionnaire will be reviewed as per Section V of the Safety Requirements for Construction Contracts, found in Volume 2 of the Contract.

1. Bidder Information:

Company Name: J-Track LLC

DDC Project Number: SANDRESM1

Company Size: ☐ Ten (10) employees or less

☒ Greater than ten (10) employees

Company has previously worked for DDC: ☒ YES ☐ NO

2. Type(s) of Construction Work:

Identify the types of work that the Bidder has performed in the last three years, and the types of work that are part of this Contract.

TYPE OF WORK	LAST 3 YEARS	THIS PROJECT
General Building Construction	☒	☒
Residential Building Construction	☐	☐
Nonresidential Building Construction	☐	☐
Heavy Construction, except building	☒	☒
Highway and Street Construction	☐	☐
Heavy Construction, except highways	☒	☒
Plumbing, Heating, HVAC	☐	☐
Painting and Paper Hanging	☐	☐
Electrical Work	☐	☐
Masonry, Stonework and Plastering	☐	☐
Carpentry and Floor Work	☐	☐
Roofing, Siding, and Sheet Metal	☐	☐
Concrete Work	☒	☒
Specialty Trade Contracting	☐	☐
Asbestos Abatement		
Other (specify) _____	☐	☐

3. Experience Modification Rate:

The Experience Modification Rate (EMR) is a rating generated by the National Council of Compensation Insurance (NCCI). This rating is used to determine the contractor's premium for worker's compensation insurance. The Bidder / Contractor may obtain its EMR by contacting its insurance broker or the NCCI. If the Bidder cannot obtain its EMR, it must submit a written explanation as to why.

The Bidder must indicate its Intrastate and Interstate EMR for the past three years. [Note: For contractors with less than three years of experience, the EMR will be considered to be 1.00].

YEAR	INTRASTATE RATE	INTERSTATE RATE
2021-2022	N/A	0.99
2020-2021	N/A	0.85
2019-2020	N/A	0.79
2018-2019 RATE	N/A	0.90
2017-2018 RATE	N/A	0.84

If the Intrastate and/or Interstate EMR for any of the past three years is greater than 1.00, the Bidder / Contractor must attach, to this questionnaire, a written explanation for the rating and identify what corrective action was taken to correct the situation resulting in that rating.

4. OSHA Information:

☐ YES ☒ NO Contractor has received a willful violation issued by OSHA or a New York City Department of Buildings (NYCDOB) construction-related violation within the last three years.

☐ YES ☒ NO Contractor has had an incident requiring OSHA notification within 8 hours (all work-related fatalities) or an incident requiring OSHA notification within 24 hours (work-related in-patient hospitalization, amputation and all loss of an eye).

The OSHA Form 300 "Log of Work-Related Injuries and Illnesses" and OSHA Form 300A "Summary of Work-Related Injuries and Illnesses" must be submitted for the last three years for Contractors with more than ten employees.

The Bidder / Contractor must indicate the total number of hours worked by its employees, as reflected in payroll records for the past three (3) years.

The Bidder / Contractor must submit the Incident Rate for Lost Time Injuries (the Incident Rate) for the past three (3) years. The Incident Rate is calculated in accordance with the formula set forth below. For each given year, the total number of incidents is the total number of non-fatal injuries and illnesses reported on the OSHA Form 300 and OSHA Form 300A. The 200,000 hours represents the equivalent of 100 employees working forty hours a week, fifty (50) weeks per year.

$$\text{Incident Rate} = \frac{\text{Total Number of Incidents X 200,000}}{\text{Total Number of Hours Worked by Employees}}$$

YEAR	TOTAL NUMBERS OF HOURS WORKED BY EMPLOYEES	INCIDENT RATE
2020	247,670	3.23
2019	204,974	0.98
2018	272,325	4.4

If the Bidder's / Contractor's Incident Rate for any of the past three years is one point higher than the Incident Rate for the type of construction it performs (listed below), the Bidder / Contractor must attach, to this questionnaire, a written explanation for the relatively high rate.

General Building Construction	8.5
Residential Building Construction	7.0
Nonresidential Building Construction	10.2
Heavy Construction, except building	8.7
Highway and Street Construction	9.7
Heavy Construction, except highways	8.3
Plumbing, Heating, HVAC	11.3
Painting and Paper Hanging	6.9
Electrical Work	9.5
Masonry, Stonework and Plastering	10.5
Carpentry and Floor Work	12.2
Roofing, Siding, and Sheet Metal	10.3
Concrete Work	8.6
Specialty Trade Contracting	8.6

5. Safety Performance on Previous DDC Project(s)

☐ YES ☒ NO Fatality or an incident requiring OSHA notification within 24 hours (work-related in-patient hospitalization, amputation and all loss of an eye) on DDC Project(s) within the last three (3) years.

DDC Project Number(s): _____, _____, _____

The Bidder hereby affirms that all the information provided in this Safety Questionnaire and all additional pages and/or attachments, if applicable, consist of accurate representations.

Date: 3/11/2021 By: _____
(Signature of Bidder: Owner, Partner, Corporate Officer)

Title: President

SAFETY QUESTIONNAIRE

The Bidder must include, with its bid, all information requested on this Safety Questionnaire. Failure to provide a completed and signed Safety Questionnaire at the time of bid opening may result in disqualification of the bid as non-responsive. This Safety Questionnaire will be reviewed as per Section V of the Safety Requirements for Construction Contracts, found in Volume 2 of the Contract.

1. Bidder Information:

Company Name: Welkin Mechanical LLC

DDC Project Number: SANDRESM1

Company Size: ☐ Ten (10) employees or less

☑ Greater than ten (10) employees

Company has previously worked for DDC: ☐ YES ☐ NO

2. Type(s) of Construction Work:

Identify the types of work that the Bidder has performed in the last three years, and the types of work that are part of this Contract.

TYPE OF WORK	LAST 3 YEARS	THIS PROJECT
General Building Construction	☑	☒
Residential Building Construction	☐	☐
Nonresidential Building Construction	☑	☒
Heavy Construction, except building	☑	☒
Highway and Street Construction	☐	☐
Heavy Construction, except highways	☑	☒
Plumbing, Heating, HVAC	☑	☒
Painting and Paper Hanging	☐	☐
Electrical Work	☐	☐
Masonry, Stonework and Plastering	☐	☐
Carpentry and Floor Work	☐	☐
Roofing, Siding, and Sheet Metal	☐	☐
Concrete Work	☐	☐
Specialty Trade Contracting	☐	☐
Asbestos Abatement		
Other (specify) _____	☐	☐

3. Experience Modification Rate:

The Experience Modification Rate (EMR) is a rating generated by the National Council of Compensation Insurance (NCCI). This rating is used to determine the contractor's premium for worker's compensation insurance. The Bidder / Contractor may obtain its EMR by contacting its insurance broker or the NCCI. If the Bidder cannot obtain its EMR, it must submit a written explanation as to why.

The Bidder must indicate its Intrastate and Interstate EMR for the past three years. [Note: For contractors with less than three years of experience, the EMR will be considered to be 1.00].

YEAR	INTRASTATE RATE	INTERSTATE RATE
2020 - 2021	N/A	0.85
2019 - 2020	N/A	0.79
2018 - 2019 2017-2018	N/A N/A	1.01 0.84 SA

If the Intrastate and/or Interstate EMR for any of the past three years is greater than 1.00, the Bidder / Contractor must attach, to this questionnaire, a written explanation for the rating and identify what corrective action was taken to correct the situation resulting in that rating.

4. OSHA Information:

☐ YES ☑ NO Contractor has received a willful violation issued by OSHA or a New York City Department of Buildings (NYCDOB) construction-related violation within the last three years.

☑ YES ~~☑ NO~~ RAJS Contractor has had an incident requiring OSHA notification within 8 hours (all work-related fatalities) or an incident requiring OSHA notification within 24 hours (work-related in-patient hospitalization, amputation and all loss of an eye).

The OSHA Form 300 "Log of Work-Related Injuries and Illnesses" and OSHA Form 300A "Summary of Work-Related Injuries and Illnesses" must be submitted for the last three years for Contractors with more than ten employees.

The Bidder / Contractor must indicate the total number of hours worked by its employees, as reflected in payroll records for the past three (3) years.

The Bidder / Contractor must submit the Incident Rate for Lost Time Injuries (the Incident Rate) for the past three (3) years. The Incident Rate is calculated in accordance with the formula set forth below. For each given year, the total number of incidents is the total number of non-fatal injuries and illnesses reported on the OSHA Form 300 and OSHA Form 300A. The 200,000 hours represents the equivalent of 100 employees working forty hours a week, fifty (50) weeks per year.

Incident Rate = $\frac{\text{Total Number of Incidents X 200,000}}{\text{Total Number of Hours Worked by Employees}}$

YEAR	TOTAL NUMBERS OF HOURS WORKED BY EMPLOYEES	INCIDENT RATE
2020	180,442	2.2
2019	171,441	~~1.16~~ 0 RAJS
2018	142,164	~~1.4~~ 0 RAJS

If the Bidder's / Contractor's Incident Rate for any of the past three years is one point higher than the Incident Rate for the type of construction it performs (listed below), the Bidder / Contractor must attach, to this questionnaire, a written explanation for the relatively high rate.

General Building Construction	8.5
Residential Building Construction	7.0
Nonresidential Building Construction	10.2
Heavy Construction, except building	8.7
Highway and Street Construction	9.7
Heavy Construction, except highways	8.3
Plumbing, Heating, HVAC	11.3
Painting and Paper Hanging	6.9
Electrical Work	9.5
Masonry, Stonework and Plastering	10.5
Carpentry and Floor Work	12.2
Roofing, Siding, and Sheet Metal	10.3
Concrete Work	8.6
Specialty Trade Contracting	8.6

5. Safety Performance on Previous DDC Project(s)

☐ YES ☑ NO Fatality or an incident requiring OSHA notification within 24 hours (work-related in-patient hospitalization, amputation and all loss of an eye) on DDC Project(s) within the last three (3) years.

DDC Project Number(s): _____, _____, _____

The Bidder hereby affirms that all the information provided in this Safety Questionnaire and all additional pages and/or attachments, if applicable, consist of accurate representations.

Date: 3/8/2021 By: _____

(Signature of Bidder: Owner, Partner, Corporate Officer)

Title: President

SAFETY QUESTIONNAIRE

The Bidder must include, with its bid, all information requested on this Safety Questionnaire. Failure to provide a completed and signed Safety Questionnaire at the time of bid opening may result in disqualification of the bid as non-responsive. This Safety Questionnaire will be reviewed as per Section V of the Safety Requirements for Construction Contracts, found in Volume 2 of the Contract.

1. Bidder Information:

Company Name: Posillico Civil, Inc.

DDC Project Number: SANDRESM1

Company Size: ☐ Ten (10) employees or less

☑ Greater than ten (10) employees

Company has previously worked for DDC: ☒ YES ☐ NO

2. Type(s) of Construction Work:

Identify the types of work that the Bidder has performed in the last three years, and the types of work that are part of this Contract.

TYPE OF WORK	LAST 3 YEARS	THIS PROJECT
General Building Construction	☐	☐
Residential Building Construction	☐	☐
Nonresidential Building Construction	☐	☐
Heavy Construction, except building	☒	x
Highway and Street Construction	☒	x
Heavy Construction, except highways	☒	x
Plumbing, Heating, HVAC	☒	x
Painting and Paper Hanging	☐	☐
Electrical Work	☐	☐
Masonry, Stonework and Plastering	☐	☐
Carpentry and Floor Work	☐	☐
Roofing, Siding, and Sheet Metal	☐	☐
Concrete Work	☒	x
Specialty Trade Contracting	☐	☐
Asbestos Abatement		
Other (specify) _____	☐	☐

3. Experience Modification Rate:

The Experience Modification Rate (EMR) is a rating generated by the National Council of Compensation Insurance (NCCI). This rating is used to determine the contractor's premium for worker's compensation insurance. The Bidder / Contractor may obtain its EMR by contacting its insurance broker or the NCCI. If the Bidder cannot obtain its EMR, it must submit a written explanation as to why.

The Bidder must indicate its Intrastate and Interstate EMR for the past three years. [Note: For contractors with less than three years of experience, the EMR will be considered to be 1.00].

YEAR	INTRASTATE RATE	INTERSTATE RATE
04/20-04/21	0.67	
04/19-04/20	0.64	
04/18-04/19	0.62	
04/17-04/18	0.67	

D.P.S. 4-21-21

If the Intrastate and/or Interstate EMR for any of the past three years is greater than 1.00, the Bidder / Contractor must attach, to this questionnaire, a written explanation for the rating and identify what corrective action was taken to correct the situation resulting in that rating.

4. OSHA Information:

☐ YES ☒ NO Contractor has received a willful violation issued by OSHA or a New York City Department of Buildings (NYCDOB) construction-related violation within the last three years.

☒ YES ☐ NO Contractor has had an incident requiring OSHA notification within 8 hours (all work-related fatalities) or an incident requiring OSHA notification within 24 hours (work-related in-patient hospitalization, amputation and all loss of an eye).

The OSHA Form 300 "Log of Work-Related Injuries and Illnesses" and OSHA Form 300A "Summary of Work-Related Injuries and Illnesses" must be submitted for the last three years for Contractors with more than ten employees.

The Bidder / Contractor must indicate the total number of hours worked by its employees, as reflected in payroll records for the past three (3) years.

The Bidder / Contractor must submit the Incident Rate for Lost Time Injuries (the Incident Rate) for the past three (3) years. The Incident Rate is calculated in accordance with the formula set forth below. For each given year, the total number of incidents is the total number of non-fatal injuries and illnesses reported on the OSHA Form 300 and OSHA Form 300A. The 200,000 hours represents the equivalent of 100 employees working forty hours a week, fifty (50) weeks per year.

$$\text{Incident Rate} = \frac{\text{Total Number of Incidents X 200,000}}{\text{Total Number of Hours Worked by Employees}}$$

YEAR	TOTAL NUMBERS OF HOURS WORKED BY EMPLOYEES	INCIDENT RATE
2020	1,133,866	1.41
2019	1,416,719	1.55
2018	1,138,910	2.28

If the Bidder's / Contractor's Incident Rate for any of the past three years is one point higher than the Incident Rate for the type of construction it performs (listed below), the Bidder / Contractor must attach, to this questionnaire, a written explanation for the relatively high rate.

General Building Construction	8.5
Residential Building Construction	7.0
Nonresidential Building Construction	10.2
Heavy Construction, except building	8.7
Highway and Street Construction	9.7
Heavy Construction, except highways	8.3
Plumbing, Heating, HVAC	11.3
Painting and Paper Hanging	6.9
Electrical Work	9.5
Masonry, Stonework and Plastering	10.5
Carpentry and Floor Work	12.2
Roofing, Siding, and Sheet Metal	10.3
Concrete Work	8.6
Specialty Trade Contracting	8.6

5. Safety Performance on Previous DDC Project(s)

☐ YES ☒ NO Fatality or an incident requiring OSHA notification within 24 hours (work-related in-patient hospitalization, amputation and all loss of an eye) on DDC Project(s) within the last three (3) years.

DDC Project Number(s): _____, _____, _____

The Bidder hereby affirms that all the information provided in this Safety Questionnaire and all additional pages and/or attachments, if applicable, consist of accurate representations.

Date: 2/2/2021 By: Frank Franzini
(Signature of Bidder: Owner, Partner, Corporate Officer)

Title: Frank Franzini, VP Risk Management

SAFETY QUESTIONNAIRE

The Bidder must include, with its bid, all information requested on this Safety Questionnaire. Failure to provide a completed and signed Safety Questionnaire at the time of bid opening may result in disqualification of the bid as non-responsive. This Safety Questionnaire will be reviewed as per Section V of the Safety Requirements for Construction Contracts, found in Volume 2 of the Contract.

1. Bidder Information:

Company Name: CAC Industries Inc

DDC Project Number: SANDRESM1

Company Size: ☐ Ten (10) employees or less

☑ Greater than ten (10) employees

Company has previously worked for DDC: ☑ YES ☐ NO

2. Type(s) of Construction Work:

Identify the types of work that the Bidder has performed in the last three years, and the types of work that are part of this Contract.

TYPE OF WORK	LAST 3 YEARS	THIS PROJECT
General Building Construction	☐	☐
Residential Building Construction	☐	☐
Nonresidential Building Construction	☐	☐
Heavy Construction, except building	☐	☐
Highway and Street Construction	☑	☑
Heavy Construction, except highways	☐	☐
Plumbing, Heating, HVAC	☐	☐
Painting and Paper Hanging	☐	☐
Electrical Work	☐	☐
Masonry, Stonework and Plastering	☐	☐
Carpentry and Floor Work	☐	☐
Roofing, Siding, and Sheet Metal	☐	☐
Concrete Work	☐	☐
Specialty Trade Contracting	☐	☐
Asbestos Abatement		
Other (specify) _____	☐	☐

3. Experience Modification Rate:

The Experience Modification Rate (EMR) is a rating generated by the National Council of Compensation Insurance (NCCI). This rating is used to determine the contractor's premium for worker's compensation insurance. The Bidder / Contractor may obtain its EMR by contacting its insurance broker or the NCCI. If the Bidder cannot obtain its EMR, it must submit a written explanation as to why.

The Bidder must indicate its Intrastate and Interstate EMR for the past three years. [Note: For contractors with less than three years of experience, the EMR will be considered to be 1.00].

YEAR	INTRASTATE RATE	INTERSTATE RATE
2020	.92	N/A
2019	.85	↓
2018	.82	

If the Intrastate and/or Interstate EMR for any of the past three years is greater than 1.00, the Bidder / Contractor must attach, to this questionnaire, a written explanation for the rating and identify what corrective action was taken to correct the situation resulting in that rating.

4. OSHA Information:

☐ YES ☑ NO Contractor has received a willful violation issued by OSHA or a New York City Department of Buildings (NYCDOB) construction-related violation within the last three years.

☐ YES ☑ NO Contractor has had an incident requiring OSHA notification within 8 hours (all work-related fatalities) or an incident requiring OSHA notification within 24 hours (work-related in-patient hospitalization, amputation and all loss of an eye).

The OSHA Form 300 "Log of Work-Related Injuries and Illnesses" and OSHA Form 300A "Summary of Work-Related Injuries and Illnesses" must be submitted for the last three years for Contractors with more than ten employees.

The Bidder / Contractor must indicate the total number of hours worked by its employees, as reflected in payroll records for the past three (3) years.

The Bidder / Contractor must submit the Incident Rate for Lost Time Injuries (the Incident Rate) for the past three (3) years. The Incident Rate is calculated in accordance with the formula set forth below. For each given year, the total number of incidents is the total number of non-fatal injuries and illnesses reported on the OSHA Form 300 and OSHA Form 300A. The 200,000 hours represents the equivalent of 100 employees working forty hours a week, fifty (50) weeks per year.

Incident Rate = $\frac{\text{Total Number of Incidents X 200,000}}{\text{Total Number of Hours Worked by Employees}}$

YEAR	TOTAL NUMBERS OF HOURS WORKED BY EMPLOYEES	INCIDENT RATE
2020	759,621	0.52
2019	796,912	0.50
2018	793,504	1.51

If the Bidder's / Contractor's Incident Rate for any of the past three years is one point higher than the Incident Rate for the type of construction it performs (listed below), the Bidder / Contractor must attach, to this questionnaire, a written explanation for the relatively high rate.

General Building Construction	8.5
Residential Building Construction	7.0
Nonresidential Building Construction	10.2
Heavy Construction, except building	8.7
Highway and Street Construction	9.7
Heavy Construction, except highways	8.3
Plumbing, Heating, HVAC	11.3
Painting and Paper Hanging	6.9
Electrical Work	9.5
Masonry, Stonework and Plastering	10.5
Carpentry and Floor Work	12.2
Roofing, Siding, and Sheet Metal	10.3
Concrete Work	8.6
Specialty Trade Contracting	8.6

5. Safety Performance on Previous DDC Project(s)

☐ YES ☑ NO Fatality or an incident requiring OSHA notification within 24 hours (work-related in-patient hospitalization, amputation and all loss of an eye) on DDC Project(s) within the last three (3) years.

DDC Project Number(s): _____, _____, _____

The Bidder hereby affirms that all the information provided in this Safety Questionnaire and all additional pages and/or attachments, if applicable, consist of accurate representations.

Date: 2/2/2021

By: _____
(Signature of Bidder: Owner, Partner, Corporate Officer)

Title: _____

(NO TEXT ON THIS PAGE)

IRAN DIVESTMENT ACT COMPLIANCE RIDER

FOR NEW YORK CITY CONTRACTORS

The Iran Divestment Act of 2012, effective as of April 12, 2012, is codified at State Finance Law ("SFL") §165-a and General Municipal Law ("GML") §103-g. The Iran Divestment Act, with certain exceptions, prohibits municipalities, including the City, from entering into contracts with persons engaged in investment activities in the energy sector of Iran. Pursuant to the terms set forth in SFL §165-a and GML §103-g, a person engages in investment activities in the energy sector of Iran if:

(a) The person provides goods or services of twenty million dollars or more in the energy sector of Iran, including a person that provides oil or liquefied natural gas tankers, or products used to construct or maintain pipelines used to transport oil or liquefied natural gas, for the energy sector of Iran; or

(b) The person is a financial institution that extends twenty million dollars or more in credit to another person, for forty-five days or more, if that person will use the credit to provide goods or services in the energy sector in Iran and is identified on a list created pursuant to paragraph (b) of subdivision three of Section 165-a of the State Finance Law and maintained by the Commissioner of the Office of General Services.

A bid or proposal shall not be considered for award nor shall any award be made where the bidder or proposer fails to submit a signed and verified bidder's certification.

Each bidder or proposer must certify that it is not on the list of entities engaged in investment activities in Iran created pursuant to paragraph (b) of subdivision 3 of Section 165-a of the State Finance Law. In any case where the bidder or proposer cannot certify that they are not on such list, the bidder or proposer shall so state and shall furnish with the bid or proposal a signed statement which sets forth in detail the reasons why such statement cannot be made. The City of New York may award a bid to a bidder who cannot make the certification on a case by case basis if:

(1) The investment activities in Iran were made before the effective date of this section (i.e., April 12, 2012), the investment activities in Iran have not been expanded or renewed after the effective date of this section and the person has adopted, publicized and is implementing a formal plan to cease the investment activities in Iran and to refrain from engaging in any new investments in Iran: or

(2) The City makes a determination that the goods or services are necessary for the City to perform its functions and that, absent such an exemption, the City would be unable to obtain the goods or services for which the contract is offered. Such determination shall be made in writing and shall be a public document.

BIDDER'S CERTIFICATION OF COMPLIANCE WITH IRAN DIVESTMENT ACT

Pursuant to General Municipal Law Section 103-g, which generally prohibits the City from entering into contracts with persons engaged in investment activities in the energy sector of Iran, the bidder/proposer submits the following certification:

[*Please Check One*]

BIDDER'S CERTIFICATION

☑ By submission of this bid or proposal, each bidder/proposer and each person signing on behalf of any bidder/proposer certifies, and in the case of a joint bid each party thereto certifies as to its own organization, under penalty of perjury, that to the best of its knowledge and belief, that each bidder/proposer is not on the list created pursuant to paragraph (b) of subdivision 3 of Section 165-a of the State Finance Law.

☐ I am unable to certify that my name and the name of the bidder/proposer does not appear on the list created pursuant to paragraph (b) of subdivision 3 of Section 165-a of the State Finance Law. I have attached a signed statement setting forth in detail why I cannot so certify.

SIGNATURE

Michael A Capasso

PRINTED NAME

President

TITLE

Sworn to before me this 2nd day of Feb 2021

Notary Public

Dated: 2/2/21

B. BID SCHEDULE (B-PAGES)

The following pages contain the Bid Schedule. Items listed in the Bid Schedule shall comply with the requirements of the corresponding sections of the specifications detailed in the table below. All references to the Standard Specifications, Details, Standards and Drawings shall be to the version in effect at the time of bid.

NOTES:

- "XXX" in the table below signifies any possible combination of characters and spaces.
- The table below may contain item formats which are not included in the Bid Schedule. ***Please refer to the Bid Schedule to determine which specifications apply.***

Item Number Format	Applicable Specifications
4.XXX 6.XXX 7.XXX 8.XXX *(Except 8.01 XXX; see below)* 9.XXX HW-XXX	NYC Department of Transportation ("DOT") Standard Highway Specifications, as amended in the R-Pages, located in Volume 3 of 3 herein; ***AND*** NYC DOT Standard Details of Construction; ***OR,*** ***if the item is not contained within the Standard Specifications***, then see the applicable New Sections in the I-Pages, located in Volume 3 of 3 herein.
1.XXX 50.XXX through 55.XXX 60.XXX through 66.XXX 70.XXX through 79.XXX *(Except 79.11XXX; see below)* DSS XXX DSW XXX	NYC Department of Environmental Protection ("DEP") Standard Sewer and Water Main Specifications, as amended in the R-Pages and SW-Pages, located in Volume 3 of 3 herein; ***AND*** NYC DEP Specifications for Trunk Main Work; ***AND*** NYC DEP Sewer Design Standards; ***AND*** NYC DEP Water Main Standard Drawings; ***OR,*** ***if the item is not contained within the Standard Specifications,*** then see the Amendments to the Standard Sewer and Water Main Specifications in the SW-Pages, located in Volume 3 of 3 herein.
GI-XXX PM-XXX ROW XXX	New Sections in the I-Pages, located in Volume 3 of 3 herein ***AND*** NYC DEP Standards for Green Infrastructure.
UTL-XXX	Gas Cost Sharing Standard Specifications in the EP7-Pages, located in Volume 3 of 3 herein.

Item Number Format	Applicable Specifications
83X.XXX MX.XXX MP XXX NYC-XXX NYCT-XXX NYPD-XXX P XXX PK-XXX	New Sections in the I-Pages, located in Volume 3 of 3 herein.
BMP-XXX	Specifications for Construction of Best Management Practice (BMP) and Mitigation Area in the BMP-Pages, located in Volume 3 of 3 herein.
E XXX ME XXX	Specifications for the Specialty Electrical Works in the EL-Pages, located in Volume 3 of 3 herein.
SL-XXX	NYC DOT Division of Street Lighting Specifications ***AND*** NYC Division of Street Lighting Standard Drawings.
T-XXX	NYC DOT Specifications for Traffic Signals and Intelligent Transportation Systems ***AND*** NYC DOT Traffic Signal Standard Drawings.
JB XXX	Joint Bid Specifications in the JB-Pages, located in Volume 3 of 3 herein.
8.01 XXX	Specifications for Handling, Transportation and Disposal of Nonhazardous and Potentially Hazardous Contaminated Materials in the HAZ-Pages, located in Volume 3 of 3 herein.
67.XXX	Specifications for Abatement of Coal Tar Wrap Asbestos Containing Materials in the ASB-Pages, located in Volume 3 of 3 herein.
79.11XXX	Specifications for Abatement of Transit Authority Duct Insulation Asbestos Containing Materials in the ASB-Pages, located in Volume 3 of 3 herein.

BID SCHEDULE

NOTE: (1) The Agency may reject a bid if it contains unbalanced bid prices. An unbalanced bid is considered to be one containing lump sum or unit items which do not reflect reasonable actual costs plus a reasonable proportionate share of the Bidder's anticipated profit, overhead costs, and other indirect costs, anticipated for the performance of the items in question.

(2) The following bid prices on Unit Price Contracts are to be paid for the actual quantities of the item numbers in the completed work or structure, and they cover the cost of all work, labor, material, tools, plant and appliances of every description necessary to complete the entire work, as specified, and the removal of all debris, temporary work and appliances.

(3) PLEASE BE SURE A LEGIBLE BID IS ENTERED, IN INK, FOR EACH ITEM.
Alterations must be initialed in ink by the bidder.

(4) The Extended Amount entered in Column 6 shall be the product of the Estimated Quantity in Column 3 times the Unit Price Bid in Column 5.

(5) Prospective bidders must examine the Bid Schedule carefully and, before bidding, must advise the Commissioner, in writing, if any pages are missing, and must request that such missing pages be furnished them. The pages of this Bid Schedule are numbered consecutively, as follows:
B - 3 [REVISION # 1] Through B - 150 [REVISION # 1]

PLEASE BE SURE A LEGIBLE BID IS ENTERED FOR EACH ITEM.
THE BIDDER SHALL INSERT THE TOTAL BID PRICE IN
THE BID FORM IN THIS BID BOOKLET.

BID SCHEDULE FORM

COL. 1 SEQ. NO	COL. 2 ITEM NUMBER and DESCRIPTION	COL. 3 ENGINEER'S ESTIMATE OF QUANTITY	COL. 4 UNIT	COL. 5 UNIT PRICE (IN FIGURES) DOLLARS	CTS	COL. 6 EXTENDED AMOUNT (IN FIGURES) DOLLARS	CTS
0001	202.120001 REMOVING EXISTING SUPERSTRUCTURES	1.00	L.S.	5,000,000	0	$ 5,000,000	0
0002	202.120002 REMOVING EXISTING SUPERSTRUCTURES	1.00	L.S.	5,000,000	0	$ 5,000,000	0
0003	202.120003 REMOVING EXISTING SUPERSTRUCTURES	1.00	L.S.	10,000,000	0	$ 10,000,000	0
0004	202.19 REMOVAL OF SUBSTRUCTURES	1,395.00	C.Y.	250	0	$ 348,750	0
0005	203.03 EMBANKMENT IN PLACE	140.00	C.Y.	200	0	$ 28,000	0
0006	203.03950017 EXPANDED POLYSTYRENE FILL	50,278.00	C.F.	2	0	$ 100,556	0
0007	203.07 SELECT GRANULAR FILL	510.00	C.Y.	250	0	$ 127,500	0
0008	203.12030017 PREFABRICATED VERTICAL DRAINS	1,482,525.00	L.F.	10	0	$ 14,825,250	0

BID SCHEDULE FORM

COL. 1 SEQ. NO	COL. 2 ITEM NUMBER and DESCRIPTION	COL. 3 ENGINEER'S ESTIMATE OF QUANTITY	COL. 4 UNIT	COL. 5 UNIT PRICE (IN FIGURES) DOLLARS	CTS	COL. 6 EXTENDED AMOUNT (IN FIGURES) DOLLARS	CTS
0009	203.12230017 FURNISHING EQUIPMENT FOR INSTALLING PREFABRICATED VERTICAL DRAINS	1.00	L.S.	2,500,000	0	$ 2,500,000	0
0010	203.12430017 PREPARING SURFACE FOR PREFABRICATED VERTICAL DRAINS	437,475.00	S.F.	1	50	$ 656,212	50
0011	203.20 SELECT GRANULAR SUBGRADE	90.00	C.Y.	400	0	$ 36,000	0
0012	203.21 SELECT STRUCTURAL FILL	7,790.00	C.Y.	75	0	$ 584,250	0
0013	203.25 SAND BACKFILL	130.00	C.Y.	400	0	$ 52,000	0
0014	203.90000017 GRANULAR DRAINAGE BLANKET	24,305.00	C.Y.	120	0	$ 2,916,600	0
0015	203.99010039 DEEP SOIL MIXING	40,500.00	C.Y.	500	0	$ 20,250,000	0
0016	204.01 CONTROLLED LOW STRENGTH MATERIAL	845.00	C.Y.	300	0	$ 253,500	0

BID SCHEDULE FORM

COL. 1 SEQ. NO	COL. 2 ITEM NUMBER and DESCRIPTION	COL. 3 ENGINEER'S ESTIMATE OF QUANTITY	COL. 4 UNIT	COL. 5 UNIT PRICE (IN FIGURES) DOLLARS	CTS	COL. 6 EXTENDED AMOUNT (IN FIGURES) DOLLARS	CTS
0017	206.01 STRUCTURE EXCAVATION	10,565.00	C.Y.	150	0	$ 1,584,750	0
0018	207.22 GEOTEXTILE DRAINAGE	1,040.00	S.Y.	1	0	$ 1,040	0
0019	207.25 GEOMEMBRANE	2,720.00	S.Y.	25	0	$ 68,000	0
0020	207.26 PREFABRICATED COMPOSITE STRUCTURAL DRAIN	2,100.00	S.Y.	1	0	$ 2,100	0
0021	304.11 SUBBASE COURSE, TYPE 1	50.00	C.Y.	300	0	$ 15,000	0
0022	4.01 RAG ASPHALT MACADAM PAVEMENT, 6" THICK	11,816.00	S.Y.	100	0	$ 1,181,600	0
0023	4.02 AB-R ASPHALTIC CONCRETE WEARING COURSE, 1-1/2" THICK	1,918.00	S.Y.	25	0	$ 47,950	0
0024	4.02 AG ASPHALTIC CONCRETE WEARING COURSE, 3" THICK	12,441.00	S.Y.	25	0	$ 311,025	0

BID SCHEDULE FORM

COL. 1 SEQ. NO	COL. 2 ITEM NUMBER and DESCRIPTION	COL. 3 ENGINEER'S ESTIMATE OF QUANTITY	COL. 4 UNIT	COL. 5 UNIT PRICE (IN FIGURES) DOLLARS	CTS	COL. 6 EXTENDED AMOUNT (IN FIGURES) DOLLARS	CTS
0025	4.02 CA BINDER MIXTURE	143.00	TONS	275	0	$ 39,325	0
0026	4.02 CB ASPHALTIC CONCRETE MIXTURE	1,189.00	TONS	175	0	$ 208,075	0
0027	4.04 AC CONCRETE BASE FOR PAVEMENT, 6" THICK, CLASS B-32	37.00	C.Y.	350	0	$ 12,950	0
0028	4.04 H CONCRETE BASE FOR PAVEMENT, VARIABLE THICKNESS FOR TRENCH RESTORATION, (HIGH-EARLY STRENGTH)	16.00	C.Y.	375	0	$ 6,000	0
0029	4.04 HC CONCRETE BASE FOR PAVEMENT, 8" THICK (HIGH-EARLY STRENGTH)	1,017.00	C.Y.	250	0	$ 254,250	0
0030	4.04 HD CONCRETE BASE FOR PAVEMENT, 9" THICK (HIGH-EARLY STRENGTH)	1,324.00	C.Y.	275	0	$ 364,100	0
0031	4.05 BX HIGH-EARLY STRENGTH REINFORCED CONCRETE PAVEMENT (FULL WIDTH PAVEMENT)	105.00	C.Y.	500	0	$ 52,500	0
0032	4.06 CONCRETE IN STRUCTURES, CLASS A-40	75.00	C.Y.	1,500	0	$ 112,500	0

BID SCHEDULE FORM

COL. 1 SEQ. NO	COL. 2 ITEM NUMBER and DESCRIPTION	COL. 3 ENGINEER'S ESTIMATE OF QUANTITY	COL. 4 UNIT	COL. 5 UNIT PRICE (IN FIGURES) DOLLARS	CTS	COL. 6 EXTENDED AMOUNT (IN FIGURES) DOLLARS	CTS
0033	4.07 BA RESET GRANITE CURB	145.00	L.F.	125	0	$ 18,125	0
0034	4.08 AA CONCRETE CURB (18" DEEP)	175.00	L.F.	115	0	$ 20,125	0
0035	4.09 AD STRAIGHT STEEL FACED CONCRETE CURB (18" DEEP)	2,289.00	L.F.	95	0	$ 217,455	0
0036	4.09 AE STRAIGHT STEEL FACED CONCRETE CURB (21" DEEP)	1,095.00	L.F.	100	0	$ 109,500	0
0037	4.09 BD DEPRESSED STEEL FACED CONCRETE CURB (18" DEEP)	122.00	L.F.	100	0	$ 12,200	0
0038	4.09 BE DEPRESSED STEEL FACED CONCRETE CURB (21" DEEP)	180.00	L.F.	100	0	$ 18,000	0
0039	4.09 CD CORNER STEEL FACED CONCRETE CURB (18" DEEP)	207.00	L.F.	175	0	$ 36,225	0
0040	4.09 CE CORNER STEEL FACED CONCRETE CURB (21" DEEP)	193.00	L.F.	175	0	$ 33,775	0

BID SCHEDULE FORM

COL. 1 SEQ. NO	COL. 2 ITEM NUMBER and DESCRIPTION	COL. 3 ENGINEER'S ESTIMATE OF QUANTITY	COL. 4 UNIT	COL. 5 UNIT PRICE (IN FIGURES) DOLLARS	CTS	COL. 6 EXTENDED AMOUNT (IN FIGURES) DOLLARS	CTS
0041	4.13 AAS 4" CONCRETE SIDEWALK (UNPIGMENTED)	59,689.00	S.F.	14	0	$ 835,646	0
0042	4.13 BAS 7" CONCRETE SIDEWALK (UNPIGMENTED)	4,825.00	S.F.	17	0	$ 82,025	0
0043	4.13 BR 7" REINFORCED CONCRETE SIDEWALK (UNPIGMENTED)	21,218.00	S.F.	19	0	$ 403,142	0
0044	4.13 DE EMBEDDED PREFORMED DETECTABLE WARNING UNITS	221.00	S.F.	60	0	$ 13,260	0
0045	4.14 E EPOXY COATED STEEL REINFORCEMENT BARS	200.00	LBS.	2	0	$ 400	0
0046	4.15 TOPSOIL	148.00	C.Y.	125	0	$ 18,500	0
0047	4.19 SODDING	175.00	S.Y.	25	0	$ 4,375	0
0048	50.11CS030056 3'-0"W X 5'-6"H SINGLE BARREL FLAT TOP REINFORCED CONCRETE COMBINED SEWER	212.00	L.F.	5,000	0	$ 1,060,000	0

BID SCHEDULE FORM

COL. 1 SEQ. NO	COL. 2 ITEM NUMBER and DESCRIPTION	COL. 3 ENGINEER'S ESTIMATE OF QUANTITY	COL. 4 UNIT	COL. 5 UNIT PRICE (IN FIGURES) DOLLARS	CTS	COL. 6 EXTENDED AMOUNT (IN FIGURES) DOLLARS	CTS
0049	50.11CS040040 4'-0"W X 4'-0"H SINGLE BARREL FLAT TOP REINFORCED CONCRETE COMBINED SEWER	144.00	L.F.	5,200	0	$ 748,800	0
0050	50.11CS050040 5'-0"W X 4'-0"H SINGLE BARREL FLAT TOP REINFORCED CONCRETE COMBINED SEWER	297.00	L.F.	8,300	0	$ 2,465,100	0
0051	50.11CS076060 7'-6"W X 6'-0"H SINGLE BARREL FLAT TOP REINFORCED CONCRETE COMBINED SEWER	330.00	L.F.	10,000	0	$ 3,300,000	0
0052	50.11CS080040 8'-0"W X 4'-0"H SINGLE BARREL FLAT TOP REINFORCED CONCRETE COMBINED SEWER	224.00	L.F.	8,200	0	$ 1,836,800	0
0053	50.11CS080046 8'-0"W X 4'-6"H SINGLE BARREL FLAT TOP REINFORCED CONCRETE COMBINED SEWER	126.00	L.F.	13,300	0	$ 1,675,800	0
0054	50.11CS080050 8'-0"W X 5'-0"H SINGLE BARREL FLAT TOP REINFORCED CONCRETE COMBINED SEWER	199.00	L.F.	10,000	0	$ 1,990,000	0
0055	50.11CS090046 9'-0"W X 4'-6"H SINGLE BARREL FLAT TOP REINFORCED CONCRETE COMBINED SEWER	86.00	L.F.	8,000	0	$ 688,000	0
0056	50.11CS106050 10'-6"W X 5'-0"H SINGLE BARREL FLAT TOP REINFORCED CONCRETE COMBINED SEWER	155.00	L.F.	11,800	0	$ 1,829,000	0

BID SCHEDULE FORM

COL. 1 SEQ. NO	COL. 2 ITEM NUMBER and DESCRIPTION	COL. 3 ENGINEER'S ESTIMATE OF QUANTITY	COL. 4 UNIT	COL. 5 UNIT PRICE (IN FIGURES) DOLLARS	CTS	COL. 6 EXTENDED AMOUNT (IN FIGURES) DOLLARS	CTS
0057	50.11CS110050 11'-0"W X 5'-0"H SINGLE BARREL FLAT TOP REINFORCED CONCRETE COMBINED SEWER	347.00	L.F.	9,300	0	$ 3,227,100	0
0058	50.11CS120046 12'-0"W X 4'-6"H SINGLE BARREL FLAT TOP REINFORCED CONCRETE COMBINED SEWER	816.00	L.F.	11,500	0	$ 9,384,000	0
0059	50.21C4C012D 12" R.C.P. CLASS IV COMBINED SEWER, ON CONCRETE CRADLE	288.00	L.F.	2,800	0	$ 806,400	0
0060	50.21C4C024D 24" R.C.P. CLASS IV COMBINED SEWER, ON CONCRETE CRADLE	520.00	L.F.	2,600	0	$ 1,352,000	0
0061	50.21C4C030D 30" R.C.P. CLASS IV COMBINED SEWER, ON CONCRETE CRADLE	1,003.00	L.F.	3,000	0	$ 3,009,000	0
0062	50.21C4C036D 36" R.C.P. CLASS IV COMBINED SEWER, ON CONCRETE CRADLE	1,186.00	L.F.	4,500	0	$ 5,337,000	0
0063	50.21C4C042D 42" R.C.P. CLASS IV COMBINED SEWER, ON CONCRETE CRADLE	743.00	L.F.	4,800	0	$ 3,566,400	0
0064	50.21C4C048D 48" R.C.P. CLASS IV COMBINED SEWER, ON CONCRETE CRADLE	461.00	L.F.	6,000	0	$ 2,766,000	0

BID SCHEDULE FORM

COL. 1 SEQ. NO	COL. 2 ITEM NUMBER and DESCRIPTION	COL. 3 ENGINEER'S ESTIMATE OF QUANTITY	COL. 4 UNIT	COL. 5 UNIT PRICE (IN FIGURES) DOLLARS	CTS	COL. 6 EXTENDED AMOUNT (IN FIGURES) DOLLARS	CTS
0065	50.21C4C054D 54" R.C.P. CLASS IV COMBINED SEWER, ON CONCRETE CRADLE	422.00	L.F.	4,200	0	$ 1,772,400	0
0066	50.21C4C060D 60" R.C.P. CLASS IV COMBINED SEWER, ON CONCRETE CRADLE	137.00	L.F.	8,500	0	$ 1,164,500	0
0067	50.21C5C036D 36" R.C.P. CLASS V COMBINED SEWER, ON CONCRETE CRADLE	216.00	L.F.	1,500	0	$ 324,000	0
0068	50.41C6C36 36" D.I.P. CLASS 56 COMBINED SEWER, ON CONCRETE CRADLE	54.00	L.F.	1,500	0	$ 81,000	0
0069	50.41C6C42 42" D.I.P. CLASS 56 COMBINED SEWER, ON CONCRETE CRADLE	501.00	L.F.	10,000	0	$ 5,010,000	0
0070	50.41C6E42 42" D.I.P. CLASS 56 COMBINED SEWER, ENCASED IN CONCRETE	242.00	L.F.	1,500	0	$ 363,000	0
0071	50.41M6C18 18" D.I.P. CLASS 56 STORM SEWER, ON CONCRETE CRADLE	264.00	L.F.	500	0	$ 132,000	0
0072	50.41M6C24 24" D.I.P. CLASS 56 STORM SEWER, ON CONCRETE CRADLE	308.00	L.F.	500	0	$ 154,000	0

BID SCHEDULE FORM

COL. 1 SEQ. NO	COL. 2 ITEM NUMBER and DESCRIPTION	COL. 3 ENGINEER'S ESTIMATE OF QUANTITY	COL. 4 UNIT	COL. 5 UNIT PRICE (IN FIGURES) DOLLARS	CTS	COL. 6 EXTENDED AMOUNT (IN FIGURES) DOLLARS	CTS
0073	51.11C001 CHAMBER NO. 1	1.00	EACH	350,000	0	$ 350,000	0
0074	51.11C010A CHAMBER NO. 10A	1.00	EACH	75,000	0	$ 75,000	0
0075	51.11C010B CHAMBER NO. 10B	1.00	EACH	90,000	0	$ 90,000	0
0076	51.11CM25 REGULATOR CHAMBER NO. M-25	1.00	EACH	750,000	0	$ 750,000	0
0077	51.11CM26 REGULATOR CHAMBER NO. M-26	1.00	EACH	1,200,000	0	$ 1,200,000	0
0078	51.11CM28 REGULATOR CHAMBER NO. M-28	1.00	EACH	600,000	0	$ 600,000	0
0079	51.11CM29 REGULATOR CHAMBER NO. M-29	1.00	EACH	1,200,000	0	$ 1,200,000	0
0080	51.11CM30 REGULATOR CHAMBER NO. M-30	1.00	EACH	1,200,000	0	$ 1,200,000	0

BID SCHEDULE FORM

COL. 1 SEQ. NO	COL. 2 ITEM NUMBER and DESCRIPTION	COL. 3 ENGINEER'S ESTIMATE OF QUANTITY	COL. 4 UNIT	COL. 5 UNIT PRICE (IN FIGURES) DOLLARS	CTS	COL. 6 EXTENDED AMOUNT (IN FIGURES) DOLLARS	CTS
0081	51.11CM31 REGULATOR CHAMBER NO. M-31	1.00	EACH	600,000	0	$ 600,000	0
0082	51.11CM32 REGULATOR CHAMBER NO. M-32	1.00	EACH	1,200,000	0	$ 1,200,000	0
0083	51.11CM33 REGULATOR CHAMBER NO. M-33	1.00	EACH	900,000	0	$ 900,000	0
0084	51.11CM34 REGULATOR CHAMBER NO. M-34	1.00	EACH	1,200,000	0	$ 1,200,000	0
0085	51.11CM35 REGULATOR CHAMBER NO. M-35	1.00	EACH	1,500,000	0	$ 1,500,000	0
0086	51.11P006 STANDARD 6'-0" DIAMETER PRECAST MANHOLE	12.00	EACH	40,000	0	$ 480,000	0
0087	51.11P008 STANDARD 8'-0" DIAMETER PRECAST MANHOLE	5.00	EACH	75,000	0	$ 375,000	0
0088	51.11V000 DIVERSION CHAMBER	14.00	EACH	160,000	0	$ 2,240,000	0

BID SCHEDULE FORM

COL. 1 SEQ. NO	COL. 2 ITEM NUMBER and DESCRIPTION	COL. 3 ENGINEER'S ESTIMATE OF QUANTITY	COL. 4 UNIT	COL. 5 UNIT PRICE (IN FIGURES) DOLLARS	CTS	COL. 6 EXTENDED AMOUNT (IN FIGURES) DOLLARS	CTS
0089	51.21C000000C CLEANOUT MANHOLE	13.00	EACH	25,000	0	$ 325,000	0
0090	51.21LB14000V SPECIAL MANHOLE B-14 ON EXISTING AND NEW SEWER	1.00	EACH	25,000	0	$ 25,000	0
0091	51.21S0A2024R STANDARD MANHOLE TYPE A-2 ON 24" R.C.P. SEWER	2.00	EACH	25,000	0	$ 50,000	0
0092	51.21S0B2030R STANDARD MANHOLE TYPE B-2 ON 30" R.C.P. SEWER	1.00	EACH	25,000	0	$ 25,000	0
0093	51.21S0C1036D STANDARD MANHOLE TYPE C-1 ON 36" D.I.P. SEWER	2.00	EACH	14,000	0	$ 28,000	0
0094	51.21S0C1042D STANDARD MANHOLE TYPE C-1 ON 42" D.I.P. SEWER	2.00	EACH	15,000	0	$ 30,000	0
0095	51.21S0C2036R STANDARD MANHOLE TYPE C-2 ON 36" R.C.P. SEWER	1.00	EACH	35,000	0	$ 35,000	0
0096	51.21S0C2048C STANDARD MANHOLE TYPE C-2 ON 48" WIDE F.T.R.C. SEWER	1.00	EACH	35,000	0	$ 35,000	0

BID SCHEDULE FORM

COL. 1 SEQ. NO	COL. 2 ITEM NUMBER and DESCRIPTION	COL. 3 ENGINEER'S ESTIMATE OF QUANTITY	COL. 4 UNIT	COL. 5 UNIT PRICE (IN FIGURES) DOLLARS	CTS	COL. 6 EXTENDED AMOUNT (IN FIGURES) DOLLARS	CTS
0097	51.21S0C2060C STANDARD MANHOLE TYPE C-2 ON 60" WIDE F.T.R.C. SEWER	1.00	EACH	35,000	0	$ 35,000	0
0098	51.21S0D2084C STANDARD MANHOLE TYPE D-2 ON 84" WIDE F.T.R.C. SEWER	1.00	EACH	35,000	0	$ 35,000	0
0099	51.21S0D2096C STANDARD MANHOLE TYPE D-2 ON 96" WIDE F.T.R.C. SEWER	3.00	EACH	25,000	0	$ 75,000	0
0100	51.21S0E2120C STANDARD MANHOLE TYPE E-2 ON 120" WIDE F.T.R.C. SEWER	1.00	EACH	20,000	0	$ 20,000	0
0101	51.21S0E2132C STANDARD MANHOLE TYPE E-2 ON 132" WIDE F.T.R.C. SEWER	1.00	EACH	20,000	0	$ 20,000	0
0102	51.21S0E2144C STANDARD MANHOLE TYPE E-2 ON 144" WIDE F.T.R.C. SEWER	4.00	EACH	30,000	0	$ 120,000	0
0103	51.22RM RECONSTRUCTION OF EXISTING MANHOLE ON EXISTING SEWER	18.00	EACH	5,000	0	$ 90,000	0
0104	51.31D00200V SPECIAL DEEP DROP-PIPE MANHOLE NO. 2	8.00	EACH	120,000	0	$ 960,000	0

BID SCHEDULE FORM

COL. 1 SEQ. NO	COL. 2 ITEM NUMBER and DESCRIPTION	COL. 3 ENGINEER'S ESTIMATE OF QUANTITY	COL. 4 UNIT	COL. 5 UNIT PRICE (IN FIGURES) DOLLARS	CTS	COL. 6 EXTENDED AMOUNT (IN FIGURES) DOLLARS	CTS
0105	51.31S00242R STANDARD DROP-PIPE MANHOLE TYPE II ON 42" R.C.P. SEWER	2.00	EACH	80,000	0	$ 160,000	0
0106	51.31S00254R STANDARD DROP-PIPE MANHOLE TYPE II ON 54" R.C.P. SEWER	3.00	EACH	100,000	0	$ 300,000	0
0107	51.41P000 SPECIAL CATCH BASIN	1.00	EACH	15,000	0	$ 15,000	0
0108	51.41S001 STANDARD CATCH BASIN, TYPE 1	7.00	EACH	15,000	0	$ 105,000	0
0109	51.41S002 STANDARD CATCH BASIN, TYPE 2	4.00	EACH	15,000	0	$ 60,000	0
0110	51.61 NCM 020 OUTFALL STRUCTURE NO. 020	1.00	L.S.	250,000	0	$ 250,000	0
0111	51.61 NCM 028 OUTFALL STRUCTURE NO. 028	1.00	L.S.	250,000	0	$ 250,000	0
0112	51.61 NCM 053 OUTFALL STRUCTURE NO. 053	1.00	L.S.	300,000	0	$ 300,000	0

BID SCHEDULE FORM

COL. 1 SEQ. NO	COL. 2 ITEM NUMBER and DESCRIPTION	COL. 3 ENGINEER'S ESTIMATE OF QUANTITY	COL. 4 UNIT	COL. 5 UNIT PRICE (IN FIGURES) DOLLARS	CTS	COL. 6 EXTENDED AMOUNT (IN FIGURES) DOLLARS	CTS
0113	51.61 NCM 054 OUTFALL STRUCTURE NO. 054	1.00	L.S.	300,000	0	$ 300,000	0
0114	51.61 NCM 055 OUTFALL STRUCTURE NO. 055	1.00	L.S.	150,000	0	$ 150,000	0
0115	51.61 NCM 056 OUTFALL STRUCTURE NO. 056	1.00	L.S.	250,000	0	$ 250,000	0
0116	51.61 NCM 057 OUTFALL STRUCTURE NO. 057	1.00	L.S.	250,000	0	$ 250,000	0
0117	51.61 NCM 058 OUTFALL STRUCTURE NO. 058	1.00	L.S.	250,000	0	$ 250,000	0
0118	51.61 NCM 059 OUTFALL STRUCTURE NO. 059	1.00	L.S.	250,000	0	$ 250,000	0
0119	51.61 NCM 060 OUTFALL STRUCTURE NO. 060	1.00	L.S.	200,000	0	$ 200,000	0
0120	51.71B00002 MODIFICATION OF EXISTING TYPE 2 CATCH BASIN	2.00	EACH	7,500	0	$ 15,000	0

BID SCHEDULE FORM

COL. 1 SEQ. NO	COL. 2 ITEM NUMBER and DESCRIPTION	COL. 3 ENGINEER'S ESTIMATE OF QUANTITY	COL. 4 UNIT	COL. 5 UNIT PRICE (IN FIGURES) DOLLARS	CTS	COL. 6 EXTENDED AMOUNT (IN FIGURES) DOLLARS	CTS
0121	51.71D00002 MODIFICATION OF EXISTING DROP-PIPE MANHOLE NO. 2	1.00	EACH	250,000	0	$ 250,000	0
0122	52.11D12 12" DUCTILE IRON PIPE BASIN CONNECTION	467.00	L.F.	750	0	$ 350,250	0
0123	520.50000004 SAWING CONCRETE	500.00	L.F.	10	0	$ 5,000	0
0124	54.11SC SEWER CLEANING	50.00	L.F.	25	0	$ 1,250	0
0125	54.31SR SHOTCRETE FOR REPAIR WORK	130.00	C.F.	650	0	$ 84,500	0
0126	55.11AB ABANDONING BASINS AND INLETS	2.00	EACH	2,000	0	$ 4,000	0
0127	551.012053 STEEL H-PILES (HP 12X53)	4,060.00	FOOT	75	0	$ 304,500	0
0128	551.012084 STEEL H-PILES (HP 12X84)	34,520.00	FOOT	90	0	$ 3,106,800	0

BID SCHEDULE FORM

COL. 1 SEQ. NO	COL. 2 ITEM NUMBER and DESCRIPTION	COL. 3 ENGINEER'S ESTIMATE OF QUANTITY	COL. 4 UNIT	COL. 5 UNIT PRICE (IN FIGURES) DOLLARS	CTS	COL. 6 EXTENDED AMOUNT (IN FIGURES) DOLLARS	CTS
0129	551.014073 STEEL H-PILES (HP 14X73)	560.00	L.F.	100	0	$ 56,000	0
0130	551.03950017 PREDRILLING HOLES FOR PILES	7,100.00	L.F.	250	0	$ 1,775,000	0
0131	551.12 SPLICES FOR STEEL H-PILES	430.00	EACH	500	0	$ 215,000	0
0132	551.13 FURNISHING EQUIPMENT FOR DRIVING PILES	1.00	L.S.	22,500,000	0	$ 22,500,000	0
0133	551.14 DYNAMIC PILE TESTING	18.00	EACH	7,500	0	$ 135,000	0
0134	551.40200017 FURNISHING EQUIPMENT FOR INSTALLING MICROPILES	1.00	L.S.	7,500,000	0	$ 7,500,000	0
0135	551.50220017 STATIC PILE LOAD TEST	3.00	EACH	60,000	0	$ 180,000	0
0136	551.92000008 REMOVAL OF PILES	40.00	EACH	2,000	0	$ 80,000	0

BID SCHEDULE FORM

COL. 1 SEQ. NO	COL. 2 ITEM NUMBER and DESCRIPTION	COL. 3 ENGINEER'S ESTIMATE OF QUANTITY	COL. 4 UNIT	COL. 5 UNIT PRICE (IN FIGURES) DOLLARS	CTS	COL. 6 EXTENDED AMOUNT (IN FIGURES) DOLLARS	CTS
0137	551.99301239 MICROPILES (DESIGN PROVIDED)	37,600.00	L.F.	250	0	$ 9,400,000	0
0138	551.99450017 PERMANENT CASING FOR MICROPILES	30,600.00	L.F.	125	0	$ 3,825,000	0
0139	552.13 TEMPORARY STEEL SHEETING	20,970.00	S.F.	5	0	$ 104,850	0
0140	554.43 FILL TYPE RETAINING WALL (GREATER THAN 18FT. - 24FT.)	2,680.00	S.F.	20	0	$ 53,600	0
0141	555.02000001 CONCRETE FOR STRUCTURES CLASS MP (MASS PLACEMENT)	210.00	C.Y.	600	0	$ 126,000	0
0142	555.08 FOOTING CONCRETE, CLASS HP	3,202.00	C.Y.	600	0	$ 1,921,200	0
0143	555.09 CONCRETE FOR STRUCTURES, CLASS HP	3,265.00	C.Y.	1,200	0	$ 3,918,000	0
0144	556.0102 EPOXY- COATED STEEL FABRIC REINFORCEMENT	90.00	S.Y.	100	0	$ 9,000	0

BID SCHEDULE FORM

COL. 1 SEQ. NO	COL. 2 ITEM NUMBER and DESCRIPTION	COL. 3 ENGINEER'S ESTIMATE OF QUANTITY	COL. 4 UNIT	COL. 5 UNIT PRICE (IN FIGURES) DOLLARS	CTS	COL. 6 EXTENDED AMOUNT (IN FIGURES) DOLLARS	CTS
0145	556.0202 EPOXY- COATED BAR REINFORCEMENT FOR STRUCTURES	985,283.00	LBS.	2	0	$ 1,970,566	0
0146	556.03 STUD SHEAR CONNECTORS FOR BRIDGES	3,816.00	EACH	20	0	$ 76,320	0
0147	557.0109 SUPERSTRUCTURE SLAB WITH INTEGRAL WEARING SURFACE - BOTTOM FORMWORK REQUIRED - TYPE 9 FRICTION	2,580.00	S.Y.	450	0	$ 1,161,000	0
0148	557.2001 STRUCTURAL APPROACH SLAB WITH INTEGRAL WEARING SURFACE - TYPE 1 FRICTION	411.00	S.Y.	120	0	$ 49,320	0
0149	557.29 WINTER SURFACE TREATMENT - SUPERSTRUCTURE SLABS AND STRUCTURAL APPROACH SLABS	1,114.00	S.Y.	50	0	$ 55,700	0
0150	559.16960118 PROTECTIVE SEALING OF STRUCTURAL CONCRETE	154,098.00	S.F.	3	0	$ 462,294	0
0151	559.18960118 PROTECTIVE SEALING OF STRUCTURAL CONCRETE ON NEW BRIDGE DECKS AND BRIDGE DECK OVERLAYS	23,120.00	S.F.	1	0	$ 23,120	0
0152	559.90010011 Anti-graffiti Protection Coating	1,750.00	S.Y.	45	0	$ 78,750	0

BID SCHEDULE FORM

COL. 1 SEQ. NO	COL. 2 ITEM NUMBER and DESCRIPTION	COL. 3 ENGINEER'S ESTIMATE OF QUANTITY	COL. 4 UNIT	COL. 5 UNIT PRICE (IN FIGURES) DOLLARS	CTS	COL. 6 EXTENDED AMOUNT (IN FIGURES) DOLLARS	CTS
0153	560.10040010 REMOVAL OF STONE MANSORY	4,330.00	S.F.	25	0	$ 108,250	0
0154	563.0101 PRESTRESSED CONCRETE I-BEAM UNIT (AASHTO TYPE I GIRDER)	552.00	L.F.	700	0	$ 386,400	0
0155	563.0105 PRESTRESSED CONCRETE I-BEAM UNIT (AASHTO TYPE 5 GIRDER)	19,772.00	L.F.	1,100	0	$ 21,749,200	0
0156	563.03 PRESTRESSED HOLLOW SLAB UNITS	1,745.00	S.F.	400	0	$ 698,000	0
0157	564.02010211 BRIDGE HANGER ASSEMBLIES	1.00	L.S.	7,750,000	0	$ 7,750,000	0
0158	564.0501 STRUCTURAL STEEL (TYPE 1)	1.00	L.S.	7,750,000	0	$ 7,750,000	0
0159	564.0502 STRUCTURAL STEEL (TYPE 2)	1.00	L.S.	25,000,000	0	$ 25,000,000	0
0160	565.14200008 NON-GUIDED POLYTETRAFLUORETHYLENE (PTFE) SLIDING BEARING	1,209.00	EACH	1,500	0	$ 1,813,500	0

BID SCHEDULE FORM

COL. 1 SEQ. NO	COL. 2 ITEM NUMBER and DESCRIPTION	COL. 3 ENGINEER'S ESTIMATE OF QUANTITY	COL. 4 UNIT	COL. 5 UNIT PRICE (IN FIGURES) DOLLARS	CTS	COL. 6 EXTENDED AMOUNT (IN FIGURES) DOLLARS	CTS
0161	565.1522 TYPE M.R. EXPANSION BEARINGS (226 to 450 KIPS)	4.00	EACH	10,000	0	$ 40,000	0
0162	565.1523 TYPE M.R. EXPANSION BEARING (451 TO 675 k)	2.00	EACH	10,000	0	$ 20,000	0
0163	565.1722 TYPE M.R. FIXED BEARINGS (226 to 450 KIPS)	4.00	EACH	10,000	0	$ 40,000	0
0164	565.1723 TYPE M.R. FIXED BEARING (451 TO 675 k)	2.00	EACH	10,000	0	$ 20,000	0
0165	565.1821 TYPE E.P. BEARINGS (ALL LOAD RANGES)	761.00	EACH	300	0	$ 228,300	0
0166	565.1921 TYPE E.L. BEARING (0 TO 55 K)	36.00	EACH	500	0	$ 18,000	0
0167	565.1922 TYPE E.L. BEARING (56 TO 111 KIPS)	242.00	EACH	500	0	$ 121,000	0
0168	565.1923 TYPE E.L. BEARING (112 TO 168 KIPS)	736.00	EACH	500	0	$ 368,000	0

BID SCHEDULE FORM

COL. 1 SEQ. NO	COL. 2 ITEM NUMBER and DESCRIPTION	COL. 3 ENGINEER'S ESTIMATE OF QUANTITY	COL. 4 UNIT	COL. 5 UNIT PRICE (IN FIGURES) DOLLARS	CTS	COL. 6 EXTENDED AMOUNT (IN FIGURES) DOLLARS	CTS
0169	565.1924 TYPE E.L. BEARING (169 TO 225 KIPS)	318.00	EACH	500	0	$ 159,000	0
0170	565.1925 TYPE E.L. BEARING (OVER 225 KIPS)	10.00	EACH	500	0	$ 5,000	0
0171	567.60 ARMORLESS BRIDGE JOINT SYSTEM	244.00	FOOT	150	0	$ 36,600	0
0172	568.12010010 METAL HANDRAIL	1,077.00	L.F.	1,000	0	$ 1,077,000	0
0173	569.03 VERTICAL FACED CONCRETE PARAPET	3,902.00	FOOT	350	0	$ 1,365,700	0
0174	580.01 REMOVAL OF STRUCTURAL CONCRETE	190.00	C.Y.	700	0	$ 133,000	0
0175	582.06 REMOVAL OF STRUCTURAL CONCRETE- REPLACEMENT WITH CLASS D CONCRETE	6,187.00	S.F.	120	0	$ 742,440	0
0176	582.07 REMOVAL OF STRUCTURAL CONCRETE - REPLACEMENT WITH VERTICAL AND OVERHEAD PATCHING MATERIAL	1,420.00	S.F.	160	0	$ 227,200	0

BID SCHEDULE FORM

COL. 1 SEQ. NO	COL. 2 ITEM NUMBER and DESCRIPTION	COL. 3 ENGINEER'S ESTIMATE OF QUANTITY	COL. 4 UNIT	COL. 5 UNIT PRICE (IN FIGURES) DOLLARS	CTS	COL. 6 EXTENDED AMOUNT (IN FIGURES) DOLLARS	CTS
0177	586.0201 DRILLING AND GROUTING BOLTS OR REINFORCEMENT BARS	3,025.00	EACH	350	0	$ 1,058,750	0
0178	595.50000018 SHEET-APPLIED WATERPROOFING MEMBRANE	178,872.00	S.F.	5	0	$ 894,360	0
0179	6.01 AC CLEARING AND GRUBBING	2,825.00	S.Y.	25	0	$ 70,625	0
0180	6.02 AAN UNCLASSIFIED EXCAVATION	38,723.30	C.Y.	25	0	$ 968,082	50
0181	6.02 ABS HAND EXCAVATION AROUND STRUCTURES AND UTILITIES	1,438.00	C.Y.	400	0	$ 575,200	0
0182	6.03 AA STRIPPING PAVEMENT SURFACE (ASPHALTIC CONCRETE)	3,734.00	S.Y.	25	0	$ 93,350	0
0183	6.03 AA (S) STRIPPING PAVEMENT SURFACE (ASPHALTIC CONCRETE) (SHARED PATHWAY)	1,214.00	S.Y.	25	0	$ 30,350	0
0184	6.03 DD STRIPPING PAVEMENT SURFACE (COBBLESTONE) (DELIVERING BLOCK TO YARD)	678.00	S.Y.	50	0	$ 33,900	0

BID SCHEDULE FORM

COL. 1 SEQ. NO	COL. 2 ITEM NUMBER and DESCRIPTION	COL. 3 ENGINEER'S ESTIMATE OF QUANTITY	COL. 4 UNIT	COL. 5 UNIT PRICE (IN FIGURES) DOLLARS	CTS	COL. 6 EXTENDED AMOUNT (IN FIGURES) DOLLARS	CTS
0185	6.06 BA GRANITE BLOCK SIDEWALK (SAND JOINTS) (SALVAGED BLOCK)	155.00	S.Y.	125	0	$ 19,375	0
0186	6.18 X PICKET FENCE REMOVED	3,730.00	L.F.	10	0	$ 37,300	0
0187	6.20 BROKEN STONE BALLAST	300.00	C.Y.	150	0	$ 45,000	0
0188	6.22 F ADDITIONAL HARDWARE	4,350.00	LBS.	2	50	$ 10,875	0
0189	6.23 AB REMOVE EXISTING FIRE ALARM POST	6.00	EACH	1,000	0	$ 6,000	0
0190	6.23 BA FURNISH AND INSTALL FIRE ALARM POST AND SUBBASE IN ACCORDANCE WITH F.D. STD. DWG. #141	50.00	EACH	1,600	0	$ 80,000	0
0191	6.23 BD FURNISH AND INSTALL 4-PAIR FIRE ALARM CABLE	500.00	L.F.	5	0	$ 2,500	0
0192	6.23 BES FURNISH AND INSTALL FIRE DEPARTMENT SLOTTED MANHOLE TYPE "A" WITH FRAME AND COVER IN ACCORDANCE WITH F.D. STD. DWG. #140, #144S & #144E	2.00	EACH	8,500	0	$ 17,000	0

BID SCHEDULE FORM

COL. 1 SEQ. NO	COL. 2 ITEM NUMBER and DESCRIPTION	COL. 3 ENGINEER'S ESTIMATE OF QUANTITY	COL. 4 UNIT	COL. 5 UNIT PRICE (IN FIGURES)		COL. 6 EXTENDED AMOUNT (IN FIGURES)	
				DOLLARS	CTS	DOLLARS	CTS
0193	6.23 BFF FURNISH AND INSTALL FIRE DEPARTMENT 16 WIRE TERMINAL BOX AND TERMINATE FIRE ALARM CABLES	2.00	EACH	1,200	0	$ 2,400	0
0194	6.23 BGSE FURNISH AND INSTALL 4" P.V.C. CONDUIT, SCHEDULE 40, U.L. 651 (WITH PAVEMENT EXCAVATION)	220.00	L.F.	25	0	$ 5,500	0
0195	6.23 BHE FURNISH AND INSTALL 4" 90-DEGREE P.V.C. WIDE BEND, SCHEDULE 40, U.L. 651 (WITH PAVEMENT EXCAVATION) IN ACCORDANCE WITH F.D. STD. DWG. #141 OR #145AA	2.00	EACH	300	0	$ 600	0
0196	6.23 BP FURNISH AND INSTALL FIRE ALARM PEDESTAL BUMPERS (2 REQUIRED PER SET) IN ACCORDANCE WITH F.D. STD. DWG. #168	1.00	SETS	150	0	$ 150	0
0197	6.23 RM REMOVE EXISTING F.D.N.Y. MANHOLE	2.00	EACH	4,500	0	$ 9,000	0
0198	6.25 RS TEMPORARY SIGNS	100.00	S.F.	50	0	$ 5,000	0
0199	6.27 R REMOVAL AND DISPOSAL OF CONCRETE BARRIERS	787.00	L.F.	25	0	$ 19,675	0
0200	6.28 AA LIGHTED TIMBER BARRICADES	1,400.00	L.F.	12	0	$ 16,800	0

BID SCHEDULE FORM

COL. 1 SEQ. NO	COL. 2 ITEM NUMBER and DESCRIPTION	COL. 3 ENGINEER'S ESTIMATE OF QUANTITY	COL. 4 UNIT	COL. 5 UNIT PRICE (IN FIGURES) DOLLARS	CTS	COL. 6 EXTENDED AMOUNT (IN FIGURES) DOLLARS	CTS
0201	6.30 AA BEAM TYPE GUIDE RAIL	150.00	L.F.	75	0	$ 11,250	0
0202	6.30 AR REMOVE EXISTING GUIDE RAIL	100.00	L.F.	10	0	$ 1,000	0
0203	6.31 WS PRECAST CONCRETE WHEEL STOPS	40.00	EACH	500	0	$ 20,000	0
0204	6.34 AD CHAIN LINK FENCE, 8'-0" HIGH	1,788.00	L.F.	175	0	$ 312,900	0
0205	6.34 AMF STEEL PICKET FENCE WITH WELDED WIRE MESH	2,780.00	L.F.	800	0	$ 2,224,000	0
0206	6.34 BD CHAIN LINK FENCE GATE FOR 8'-0" HIGH FENCE	5.00	L.F.	2,200	0	$ 11,000	0
0207	6.34 X REMOVE AND DISPOSE OF EXISTING CHAIN LINK FENCE	1,183.00	L.F.	10	0	$ 11,830	0
0208	6.36 DR STRUCTURAL REPAIR AND ADJUSTMENT OF UTILITY STRUCTURES	8.00	C.Y.	1,500	0	$ 12,000	0

BID SCHEDULE FORM

COL. 1 SEQ. NO	COL. 2 ITEM NUMBER and DESCRIPTION	COL. 3 ENGINEER'S ESTIMATE OF QUANTITY	COL. 4 UNIT	COL. 5 UNIT PRICE (IN FIGURES) DOLLARS	CTS	COL. 6 EXTENDED AMOUNT (IN FIGURES) DOLLARS	CTS
0209	6.40 CR ENGINEER'S FIELD OFFICE (COASTAL RESILIENCY)	70.50	MONTH	200,000	0	$ 14,100,000	0
0210	6.41 LINE AND GRADE SURVEYS	1.00	L.S.	30,000,000	0	$ 30,000,000	0
0211	6.43 D DIGITAL PHOTOGRAPHS	63,000.00	SETS	10	0	$ 630,000	0
0212	6.44 THERMOPLASTIC REFLECTORIZED PAVEMENT MARKINGS (4" WIDE)	31,112.00	L.F.	1	0	$ 31,112	0
0213	6.50 CLEANING OF DRAINAGE STRUCTURES	5.00	EACH	750	0	$ 3,750	0
0214	6.53 REMOVE EXISTING LANE MARKINGS (4" WIDE)	31,317.00	L.F.	1	0	$ 31,317	0
0215	6.55 SAWCUTTING EXISTING PAVEMENT	15,085.00	L.F.	5	0	$ 75,425	0
0216	6.59 C CONCRETE BARRIER, HALF SECTION	245.00	L.F.	200	0	$ 49,000	0

BID SCHEDULE FORM

COL. 1 SEQ. NO	COL. 2 ITEM NUMBER and DESCRIPTION	COL. 3 ENGINEER'S ESTIMATE OF QUANTITY	COL. 4 UNIT	COL. 5 UNIT PRICE (IN FIGURES) DOLLARS	CTS	COL. 6 EXTENDED AMOUNT (IN FIGURES) DOLLARS	CTS
0217	6.67 SUBBASE COURSE, SELECT GRANULAR MATERIAL	1,186.00	C.Y.	250	0	$ 296,500	0
0218	6.68 PLASTIC FILTER FABRIC	1,000.00	S.Y.	10	0	$ 10,000	0
0219	6.70 MAINTENANCE AND PROTECTION OF TRAFFIC	1.00	L.S.	50,000,000	0	$ 50,000,000	0
0220	6.75 GRINDING EXISTING ASPHALTIC CONCRETE WEARING COURSE	184.00	C.Y.	175	0	$ 32,200	0
0221	6.82 A REMOVING EXISTING TRAFFIC AND STREET NAME SIGNS	130.00	S.F.	75	0	$ 9,750	0
0222	6.82 B REMOVING EXISTING TRAFFIC AND STREET NAME SIGN POSTS	278.00	L.F.	35	0	$ 9,730	0
0223	6.83 AA FURNISHING NEW NON-REFLECTORIZED TRAFFIC SIGNS	28.00	S.F.	50	0	$ 1,400	0
0224	6.83 AB FURNISHING NEW TRAFFIC SIGN POSTS	313.00	L.F.	15	0	$ 4,695	0

BID SCHEDULE FORM

COL. 1 SEQ. NO	COL. 2 ITEM NUMBER and DESCRIPTION	COL. 3 ENGINEER'S ESTIMATE OF QUANTITY	COL. 4 UNIT	COL. 5 UNIT PRICE (IN FIGURES) DOLLARS	CTS	COL. 6 EXTENDED AMOUNT (IN FIGURES) DOLLARS	CTS
0225	6.83 AR FURNISHING NEW REFLECTORIZED TRAFFIC SIGNS	162.00	S.F.	50	0	$ 8,100	0
0226	6.83 BA INSTALLING TRAFFIC SIGNS	114.00	S.F.	60	0	$ 6,840	0
0227	6.83 BB INSTALLING TRAFFIC SIGN POSTS	313.00	L.F.	100	0	$ 31,300	0
0228	6.85 A TRAFFIC ENFORCEMENT AGENTS PRICE BID SHALL BE FOR THE FIXED SUM OF $ 976,084.00	1.00	F.S.	976,084	0	$ 976,084	0
0229	6.86 AA FURNISHING NEW STREET NAME SIGNS	11.00	S.F.	100	0	$ 1,100	0
0230	6.86 AB FURNISHING NEW STREET NAME SIGN POSTS	50.00	L.F.	100	0	$ 5,000	0
0231	6.86 BA INSTALLING STREET NAME SIGNS	11.00	S.F.	100	0	$ 1,100	0
0232	6.86 BB INSTALLING STREET NAME SIGN POSTS	50.00	L.F.	100	0	$ 5,000	0

BID SCHEDULE FORM

COL. 1 SEQ. NO	COL. 2 ITEM NUMBER and DESCRIPTION	COL. 3 ENGINEER'S ESTIMATE OF QUANTITY	COL. 4 UNIT	COL. 5 UNIT PRICE (IN FIGURES) DOLLARS	CTS	COL. 6 EXTENDED AMOUNT (IN FIGURES) DOLLARS	CTS
0233	6.87 PLASTIC BARRELS	500.00	EACH	50	0	$ 25,000	0
0234	6.91 REFLECTIVE CRACKING MEMBRANE (18" WIDE)	8,598.00	L.F.	4	0	$ 34,392	0
0235	6.99 AUDIO AND VIDEO DOCUMENTATION SURVEY	1.00	L.S.	5,000	0	$ 5,000	0
0236	60.11R606 FURNISHING AND DELIVERING 6-INCH DUCTILE IRON RESTRAINED JOINT PIPE (CLASS 56)	96.00	L.F.	65	0	$ 6,240	0
0237	60.11R612 FURNISHING AND DELIVERING 12-INCH DUCTILE IRON RESTRAINED JOINT PIPE (CLASS 56)	1,085.00	L.F.	150	0	$ 162,750	0
0238	60.12D06 LAYING 6-INCH DUCTILE IRON PIPE AND FITTINGS	130.00	L.F.	425	0	$ 55,250	0
0239	60.12D12 LAYING 12-INCH DUCTILE IRON PIPE AND FITTINGS	1,845.00	L.F.	400	0	$ 738,000	0
0240	60.13M0A24 FURNISHING AND DELIVERING DUCTILE IRON MECHANICAL JOINT 24 -INCH DIAMETER AND SMALLER FITTINGS, INCLUDING WEDGE TYPE RETAINER GLANDS	2.70	TONS	15,000	0	$ 40,500	0

BID SCHEDULE FORM

COL. 1 SEQ. NO	COL. 2 ITEM NUMBER and DESCRIPTION	COL. 3 ENGINEER'S ESTIMATE OF QUANTITY	COL. 4 UNIT	COL. 5 UNIT PRICE (IN FIGURES) DOLLARS	CTS	COL. 6 EXTENDED AMOUNT (IN FIGURES) DOLLARS	CTS
0241	60.13M5B FURNISHING AND DELIVERING 12- INCH MECHANICAL JOINT BENDS (CLASS 55)	0.30	TONS	15,000	0	$ 4,500	0
0242	60.13M5C FURNISHING AND DELIVERING 12- INCH MECHANICAL JOINT CAPS (CLASS 55)	0.10	TONS	15,000	0	$ 1,500	0
0243	60.13M5T FURNISHING AND DELIVERING 12- INCH MECHANICAL JOINT TEES (CLASS 55)	0.80	TONS	15,000	0	$ 12,000	0
0244	60.21SP5T48 FURNISHING, DELIVERING AND LAYING 48-INCH STRAIGHT STEEL PIPE, 5/8-INCH WALL THICKNESS	50.00	L.F.	15,000	0	$ 750,000	0
0245	605.0901 UNDERDRAIN FILLER, TYPE 1	210.00	C.Y.	200	0	$ 42,000	0
0246	605.1503 PERFORATED CORRUGATED POLYETHYLENE UNDERDRAIN TUBING, 8 INCH DIAMETER	60.00	L.F.	200	0	$ 12,000	0
0247	605.1504 PERFORATED CORRUGATED POLYETHYLENE UNDERDRAIN TUBING, 10 INCH DIAMETER	1,420.00	L.F.	200	0	$ 284,000	0
0248	606.2801 HPBO (MOD) CORRUGATED BEAM MEDIAN BARRIER	216.00	L.F.	100	0	$ 21,600	0

BID SCHEDULE FORM

COL. 1 SEQ. NO	COL. 2 ITEM NUMBER and DESCRIPTION	COL. 3 ENGINEER'S ESTIMATE OF QUANTITY	COL. 4 UNIT	COL. 5 UNIT PRICE (IN FIGURES) DOLLARS	CTS	COL. 6 EXTENDED AMOUNT (IN FIGURES) DOLLARS	CTS
0249	606.3041 SINGLE-SLOPE CONCRETE MEDIAN BARRIER (OPTIONAL)	147.00	L.F.	300	0	$ 44,100	0
0250	606.30420308 SINGLE-SLOPE TRAFFIC BARRIER WALL	14.00	L.F.	400	0	$ 5,600	0
0251	606.3051 SINGLE-SLOPE CONCRETE MEDIAN BARRIER - WIDE (OPTIONAL)	1,146.00	L.F.	175	0	$ 200,550	0
0252	606.3061 SINGLE-SLOPE CONCRETE HALF SECTION BARRIER (OPTIONAL)	539.00	L.F.	225	0	$ 121,275	0
0253	606.31010005 CONCRETE BARRIER - SPECIAL SECTION TYPE 1	1.00	EACH	20,000	0	$ 20,000	0
0254	606.31020005 CONCRETE BARRIER - SPECIAL SECTION TYPE 2	2.00	EACH	15,000	0	$ 30,000	0
0255	606.31030005 CONCRETE BARRIER - SPECIAL SECTION TYPE 3	2.00	EACH	17,000	0	$ 34,000	0
0256	606.31040005 CONCRETE BARRIER - SPECIAL SECTION TYPE 4	2.00	EACH	20,000	0	$ 40,000	0

BID SCHEDULE FORM

COL. 1 SEQ. NO	COL. 2 ITEM NUMBER and DESCRIPTION	COL. 3 ENGINEER'S ESTIMATE OF QUANTITY	COL. 4 UNIT	COL. 5 UNIT PRICE (IN FIGURES) DOLLARS	CTS	COL. 6 EXTENDED AMOUNT (IN FIGURES) DOLLARS	CTS
0257	606.31050005 CONCRETE BARRIER - SPECIAL SECTION TYPE 5	2.00	EACH	20,000	0	$ 40,000	0
0258	606.7201 REMOVE AND DISPOSE HPBO (MOD) CORRUGATED BEAM MEDIAN BARRIER	1,171.00	L.F.	125	0	$ 146,375	0
0259	606.75 REMOVE AND DISPOSE CONCRETE MEDIAN BARRIER	395.00	L.F.	175	0	$ 69,125	0
0260	606.751 REMOVE AND DISPOSE CONCRETE BARRIER - HALF SECTION	837.00	L.F.	100	0	$ 83,700	0
0261	606.8906 TRANSITION (TYPE 2) - HPBO (MOD) CORRUGATED BEAM TO SINGLE-SLOPE CONCRETE MEDIAN BARRIER	1.00	EACH	13,000	0	$ 13,000	0
0262	606.9003 TRANSITION (TYPE 5) - HALF-SECTION TO FULL-SECTION SINGLE- SLOPE CONCRETE BARRIER	2.00	EACH	4,000	0	$ 8,000	0
0263	607.91120001 STEEL RAILING AND HANDRAIL	1,990.00	L.F.	550	0	$ 1,094,500	0
0264	608.0101 CONCRETE SIDEWALKS AND DRIVEWAYS	30.00	C.Y.	850	0	$ 25,500	0

BID SCHEDULE FORM

COL. 1 SEQ. NO	COL. 2 ITEM NUMBER and DESCRIPTION	COL. 3 ENGINEER'S ESTIMATE OF QUANTITY	COL. 4 UNIT	COL. 5 UNIT PRICE (IN FIGURES) DOLLARS	CTS	COL. 6 EXTENDED AMOUNT (IN FIGURES) DOLLARS	CTS
0265	61.11DMM06 FURNISHING AND DELIVERING 6-INCH MECHANICAL JOINT DUCTILE IRON GATE VALVE COMPLETE WITH WEDGE TYPE RETAINER GLANDS	3.00	EACH	1,600	0	$ 4,800	0
0266	61.11DMM12 FURNISHING AND DELIVERING 12-INCH MECHANICAL JOINT DUCTILE IRON GATE VALVE COMPLETE WITH WEDGE TYPE RETAINER GLANDS	11.00	EACH	5,000	0	$ 55,000	0
0267	61.12DMM06 SETTING 6-INCH MECHANICAL JOINT DUCTILE IRON GATE VALVE COMPLETE WITH WEDGE TYPE RETAINER GLANDS	3.00	EACH	375	0	$ 1,125	0
0268	61.12DMM12 SETTING 12-INCH MECHANICAL JOINT DUCTILE IRON GATE VALVE COMPLETE WITH WEDGE TYPE RETAINER GLANDS	12.00	EACH	375	0	$ 4,500	0
0269	618.79ABCN15 SECURITY BOLLARD	6.00	EACH	11,000	0	$ 66,000	0
0270	619.70040011 PROTECTIVE SAFETY SHIELDING OVER HIGHWAY	24,080.00	S.F.	1	0	$ 24,080	0
0271	62.11SD FURNISHING AND DELIVERING HYDRANTS	2.00	EACH	4,700	0	$ 9,400	0
0272	62.12SG SETTING HYDRANTS COMPLETE WITH WEDGE TYPE RETAINER GLANDS	4.00	EACH	4,000	0	$ 16,000	0

BID SCHEDULE FORM

COL. 1 SEQ. NO	COL. 2 ITEM NUMBER and DESCRIPTION	COL. 3 ENGINEER'S ESTIMATE OF QUANTITY	COL. 4 UNIT	COL. 5 UNIT PRICE (IN FIGURES) DOLLARS	CTS	COL. 6 EXTENDED AMOUNT (IN FIGURES) DOLLARS	CTS
0273	62.13RH REMOVING HYDRANTS	4.00	EACH	600	0	$ 2,400	0
0274	62.14FS FURNISHING, DELIVERING AND INSTALLING HYDRANT FENDERS	8.00	EACH	600	0	$ 4,800	0
0275	623.12 CRUSHED STONE (IN- PLACE MEASURE)	445.00	C.Y.	400	0	$ 178,000	0
0276	63.11VC FURNISHING AND DELIVERING VARIOUS CASTINGS	3.00	TONS	2,300	0	$ 6,900	0
0277	644.11 ANCHOR BOLTS	5,470.00	LBS.	5	0	$ 27,350	0
0278	644.20 DRILLED SHAFT FOR OVERHEAD SIGN STRUCTURES	264.00	C.Y.	3,700	0	$ 976,800	0
0279	644.421220 TRUSSED ARM CANTILEVER SIGN STRUCTURE (12YD ARM, 20SY AREA)	1.00	EACH	100,000	0	$ 100,000	0
0280	644.421420 Trussed arm cantilever sign structure (14yd arm, 20sy area)	1.00	EACH	100,000	0	$ 100,000	0

BID SCHEDULE FORM

COL. 1 SEQ. NO	COL. 2 ITEM NUMBER and DESCRIPTION	COL. 3 ENGINEER'S ESTIMATE OF QUANTITY	COL. 4 UNIT	COL. 5 UNIT PRICE (IN FIGURES) DOLLARS	CTS	COL. 6 EXTENDED AMOUNT (IN FIGURES) DOLLARS	CTS
0281	644.432560 SINGLE SPAN SIGN STRUCTURE (25YD MAX. SPAN, 60SY MAX. SIGN AREA)	1.00	EACH	200,000	0	$ 200,000	0
0282	644.434090 SINGLE SPAN SIGN STRUCTURE (40YD MAX. SPAN, 90YD MAX. SIGN AREA)	1.00	EACH	300,000	0	$ 300,000	0
0283	644.435090 SINGLE SPAN SIGN STRUCTURE (50YD MAX. SPAN, 90YD MAX. SIGN AREA)	1.00	EACH	375,000	0	$ 375,000	0
0284	645.62 OVERHEAD SIGN PANELS WITH HIGH-VISIBILITY SHEETING	1,306.00	S.F.	100	0	$ 130,600	0
0285	646.24 REFERENCE MARKER PANEL RELOCATION	6.00	EACH	400	0	$ 2,400	0
0286	647.21 REMOVAL OF SINGLE SPAN OVERHEAD SIGN PANEL(S), STRUCTURE, AND FOUNDATIONS	1.00	EACH	50,000	0	$ 50,000	0
0287	647.25 REMOVE AND DISPOSE OF BRIDGE-MOUNTED SIGN PANEL, SIGN PANEL ASSEMBLY	6.00	EACH	10,000	0	$ 60,000	0
0288	647.31 RELOCATE SIGN PANEL WITH ASSEMBLY SIZE I (UNDER 30SF)	9.00	EACH	500	0	$ 4,500	0

BID SCHEDULE FORM

COL. 1 SEQ. NO	COL. 2 ITEM NUMBER and DESCRIPTION	COL. 3 ENGINEER'S ESTIMATE OF QUANTITY	COL. 4 UNIT	COL. 5 UNIT PRICE (IN FIGURES) DOLLARS	CTS	COL. 6 EXTENDED AMOUNT (IN FIGURES) DOLLARS	CTS
0289	**65.11BR** FURNISHING, DELIVERING AND INSTALLING BANDS, RODS, WASHERS, ETC., COMPLETE, FOR RESTRAINING JOINTS	7,549.00	LBS.	1	50	$ 11,323	50
0290	**65.21PS** FURNISHING AND PLACING POLYETHYLENE SLEEVE	440.00	L.F.	1	50	$ 660	0
0291	**65.31FF** FURNISHING, DELIVERING AND PLACING FILTER FABRIC **Unit price bid shall not be less than: $ 0.10**	26,570.00	S.F.	1	50	$ 39,855	0
0292	**65.41PS06** FURNISHING, DELIVERING AND INSTALLING 6-INCH PIPE-TO-WALL PENETRATION SEAL, INCLUDING STEEL SLEEVE AND ANCHOR/WATER STOP PLATE	2.00	EACH	450	0	$ 900	0
0293	**65.41PS08** FURNISHING, DELIVERING AND INSTALLING 8-INCH PIPE-TO-WALL PENETRATION SEAL, INCLUDING STEEL SLEEVE AND ANCHOR/WATER STOP PLATE	3.00	EACH	600	0	$ 1,800	0
0294	**65.41PS12** FURNISHING, DELIVERING AND INSTALLING 12-INCH PIPE-TO-WALL PENETRATION SEAL, INCLUDING STEEL SLEEVE AND ANCHOR/WATER STOP PLATE	1.00	EACH	750	0	$ 750	0
0295	**65.41PS20** FURNISHING, DELIVERING AND INSTALLING 20-INCH PIPE-TO-WALL PENETRATION SEAL, INCLUDING STEEL SLEEVE AND ANCHOR/WATER STOP PLATE	1.00	EACH	1,200	0	$ 1,200	0

BID SCHEDULE FORM

COL. 1 SEQ. NO	COL. 2 ITEM NUMBER and DESCRIPTION	COL. 3 ENGINEER'S ESTIMATE OF QUANTITY	COL. 4 UNIT	COL. 5 UNIT PRICE (IN FIGURES) DOLLARS	CTS	COL. 6 EXTENDED AMOUNT (IN FIGURES) DOLLARS	CTS
0296	65.41PS24 FURNISHING, DELIVERING AND INSTALLING 24-INCH PIPE-TO-WALL PENETRATION SEAL, INCLUDING STEEL SLEEVE AND ANCHOR/WATER STOP PLATE	3.00	EACH	1,500	0	$ 4,500	0
0297	65.41PS36 FURNISHING, DELIVERING AND INSTALLING 36-INCH PIPE-TO-WALL PENETRATION SEAL, INCLUDING STEEL SLEEVE AND ANCHOR/WATER STOP PLATE	1.00	EACH	1,800	0	$ 1,800	0
0298	65.51PC FURNISHING AND PLACING CAST-IN-PLACE CONCRETE CLASS 40 AND PRECAST CONCRETE CLASS 50	2.30	C.Y.	3,700	0	$ 8,510	0
0299	65.61SS FURNISHING, DELIVERING AND PLACING STRUCTURAL, REINFORCING AND MISCELLANEOUS STEEL	435.30	LBS.	20	0	$ 8,706	0
0300	65.71SG FURNISHING, DELIVERING AND PLACING SCREENED GRAVEL OR SCREENED BROKEN STONE BEDDING	942.00	C.Y.	80	0	$ 75,360	0
0301	656.01 MISCELLANEOUS METALS	2,400.00	LBS.	30	0	$ 72,000	0
0302	670.0145 FOUNDATION FOR LIGHT STANDARDS, 45 FEET LONG	16.00	EACH	5,000	0	$ 80,000	0

BID SCHEDULE FORM

COL. 1 SEQ. NO	COL. 2 ITEM NUMBER and DESCRIPTION	COL. 3 ENGINEER'S ESTIMATE OF QUANTITY	COL. 4 UNIT	COL. 5 UNIT PRICE (IN FIGURES) DOLLARS	CTS	COL. 6 EXTENDED AMOUNT (IN FIGURES) DOLLARS	CTS
0303	698.05 FUEL PRICE ADJUSTMENT PRICE BID SHALL BE FOR THE FIXED SUM OF $ 100,000.00	1.00	F.S.	100,000	0	$ 100,000	0
0304	698.06 STEEL/IRON PRICE ADJUSTMENT PRICE BID SHALL BE FOR THE FIXED SUM OF $ 1,000,000.00	1.00	F.S.	1,000,000	0	$ 1,000,000	0
0305	7.07 A REMOVING EXISTING STEEL BOLLARDS	13.00	EACH	1,500	0	$ 19,500	0
0306	7.07 B FURNISHING AND INSTALLING NEW STEEL BOLLARDS	7.00	EACH	1,500	0	$ 10,500	0
0307	7.12 A PROCTOR ANALYSIS	120.00	EACH	100	0	$ 12,000	0
0308	7.12 B IN-PLACE SOIL DENSITY TEST	120.00	EACH	200	0	$ 24,000	0
0309	7.13 B MAINTENANCE OF SITE Unit price bid shall not be less than: $ 22,320.00	64.50	MONTH	22,320	0	$ 1,439,640	0

BID SCHEDULE FORM

COL. 1 SEQ. NO	COL. 2 ITEM NUMBER and DESCRIPTION	COL. 3 ENGINEER'S ESTIMATE OF QUANTITY	COL. 4 UNIT	COL. 5 UNIT PRICE (IN FIGURES) DOLLARS	CTS	COL. 6 EXTENDED AMOUNT (IN FIGURES) DOLLARS	CTS
0310	7.16 D TEST PITS	1,600.00	C.Y.	300	0	$ 480,000	0
0311	7.30 B REMOVAL OF TRACK	60.00	L.F.	300	0	$ 18,000	0
0312	7.31 A DEMOLITION OF ROADWAY VAULTS	130.00	C.Y.	300	0	$ 39,000	0
0313	7.31 B DEMOLITION OF TROLLEY TRACK TRUSS BLOCKS	30.00	C.Y.	400	0	$ 12,000	0
0314	7.36 PEDESTRIAN STEEL BARRICADES	1,000.00	L.F.	5	0	$ 5,000	0
0315	7.88 AA RODENT INFESTATION SURVEY AND MONITORING **Unit price bid shall not be less than: $ 167,405.00**	1.00	L.S.	167,405	0	$ 167,405	0
0316	7.88 AB RODENT BAIT STATIONS **Unit price bid shall not be less than: $ 84.00**	400.00	EACH	84	0	$ 33,600	0

BID SCHEDULE FORM

COL. 1 SEQ. NO	COL. 2 ITEM NUMBER and DESCRIPTION	COL. 3 ENGINEER'S ESTIMATE OF QUANTITY	COL. 4 UNIT	COL. 5 UNIT PRICE (IN FIGURES) DOLLARS	CTS	COL. 6 EXTENDED AMOUNT (IN FIGURES) DOLLARS	CTS
0317	7.88 AC BAITING OF RODENT BAIT STATIONS Unit price bid shall not be less than: $ 11.00	36,000.00	EACH	11	0	$ 396,000	0
0318	7.88 AD WATERBUG BAIT APPLICATIONS Unit price bid shall not be less than: $ 84.00	40.00	BLOCK	84	0	$ 3,360	0
0319	70.11SH STRUCTURAL STEEL H PILES Unit price bid shall not be less than: $ 112.50	244,350.00	V.F.	175	0	$ 42,761,250	0
0320	70.13MN MINI-PILES (GROUTED)	38,620.00	V.F.	310	0	$ 11,972,200	0
0321	70.13MT MINI-PILES, LOAD TEST	14.00	EACH	25,000	0	$ 350,000	0
0322	70.81CB CLEAN BACKFILL Unit price bid shall not be less than: $ 16.75	17,635.50	C.Y.	16	75	$ 295,394	63

BID SCHEDULE FORM

COL. 1 SEQ. NO	COL. 2 ITEM NUMBER and DESCRIPTION	COL. 3 ENGINEER'S ESTIMATE OF QUANTITY	COL. 4 UNIT	COL. 5 UNIT PRICE (IN FIGURES) DOLLARS	CTS	COL. 6 EXTENDED AMOUNT (IN FIGURES) DOLLARS	CTS
0323	70.91SW12 FURNISHING AND PLACING SHEETING AND BRACING IN TRENCH FOR WATER MAIN PIPE 12-INCH IN DIAMETER AND LESS	6,550.00	S.F.	5	0	$ 32,750	0
0324	72.11HF HYDRAULIC FILL FOR ABANDONED SEWERS AND WATER MAINS	2,093.00	C.Y.	200	0	$ 418,600	0
0325	73.21AC ADDITIONAL CONCRETE	3,350.00	C.Y.	50	0	$ 167,500	0
0326	73.41AG ADDITIONAL SELECT GRANULAR BACKFILL	4,270.00	C.Y.	100	0	$ 427,000	0
0327	73.51AS ADDITIONAL STEEL REINFORCING BARS **Unit price bid shall not be less than: $ 1.00**	396,545.00	LBS.	1	0	$ 396,545	0
0328	8.02 A SPECIAL CARE EXCAVATION AND RESTORATION FOR SIDEWALK WORK	1,075.00	S.F.	5	0	$ 5,375	0
0329	8.02 B SPECIAL CARE EXCAVATION AND RESTORATION FOR CURB WORK	2,130.00	L.F.	20	0	$ 42,600	0
0330	8.52 FP STEEL FOUNDATION PLATE	250.00	LBS.	20	0	$ 5,000	0

BID SCHEDULE FORM

COL. 1 SEQ. NO	COL. 2 ITEM NUMBER and DESCRIPTION	COL. 3 ENGINEER'S ESTIMATE OF QUANTITY	COL. 4 UNIT	COL. 5 UNIT PRICE (IN FIGURES) DOLLARS	CTS	COL. 6 EXTENDED AMOUNT (IN FIGURES) DOLLARS	CTS
0331	8.52 PT-C PAVING TRAY (NEIGHBOURHOOD TOTEM)	5.00	EACH	3,500	0	$ 17,500	0
0332	8.52 WSF-C WAYFINDING SIGN FOOTING TYPE C	2.00	EACH	15,000	0	$ 30,000	0
0333	9.06 HW ALLOWANCE FOR DECORATIVE MESH FABRIC PRICE BID SHALL BE FOR THE FIXED SUM OF $ 500,000.00	1.00	F.S.	500,000	0	$ 500,000	0
0334	9.99 FLASHING ARROW BOARD	4.00	EACH	10,000	0	$ 40,000	0
0335	ESCR 6.01 AB CLEARING AND GRUBBING	47.30	ACRE	400,000	0	$ 18,920,000	0
0336	ESCR 9.30 STORM WATER POLLUTION PREVENTION	1.00	L.S.	25,000	0	$ 25,000	0
0337	ESCR-10 AIR QUALITY MONITORING	60.00	MONTH	5,000	0	$ 300,000	0
0338	ESCR-11 NOISE MONITORING	60.00	MONTH	500	0	$ 30,000	0

BID SCHEDULE FORM

COL. 1 SEQ. NO	COL. 2 ITEM NUMBER and DESCRIPTION	COL. 3 ENGINEER'S ESTIMATE OF QUANTITY	COL. 4 UNIT	COL. 5 UNIT PRICE (IN FIGURES) DOLLARS	CTS	COL. 6 EXTENDED AMOUNT (IN FIGURES) DOLLARS	CTS
0339	ESCR-13.BRDG ARCHITECTURAL CONCRETE TEXTURED FINISHES (PEDESTRIAN BRIDGES)	21,430.00	S.F.	25	0	$ 535,750	0
0340	ESCR-13.FLWL ARCHITECTURAL CONCRETE TEXTURED FINISHES (FLOOD WALLS)	38,310.00	S.F.	25	0	$ 957,750	0
0341	ESCR-19 CON EDISON FLOODWALL UTILITY CROSSINGS PRICE BID SHALL BE FOR THE FIXED SUM OF $ 644,840.00	1.00	F.S.	644,840	0	$ 644,840	0
0342	ESCR-2 TP JET GROUT TEST PROGRAM	1.00	L.S.	1,500,000	0	$ 1,500,000	0
0343	ESCR-2.A JET GROUTING FOR UTILITY CROSSING SEEPAGE BARRIER - ANGLED	371.00	C.Y.	3,000	0	$ 1,113,000	0
0344	ESCR-2.AO ANGLED JET GROUTING FOR UTILITY CROSSINGS FOR FLOODWALLS AND FLOODWALL FOUNDATIONS WITH OBSTRUCTIONS (SEWER UTILITY CROSSINGS ONLY)	19.00	C.Y.	4,000	0	$ 76,000	0
0345	ESCR-2.FD JET GROUTING FOR GATE AND FLOODWALL FOUNDATION	9,377.00	C.Y.	2,000	0	$ 18,754,000	0

BID SCHEDULE FORM

COL. 1 SEQ. NO	COL. 2 ITEM NUMBER and DESCRIPTION	COL. 3 ENGINEER'S ESTIMATE OF QUANTITY	COL. 4 UNIT	COL. 5 UNIT PRICE (IN FIGURES) DOLLARS	CTS	COL. 6 EXTENDED AMOUNT (IN FIGURES) DOLLARS	CTS
0346	ESCR-2.FDO VERTICAL JET GROUTING FOR UTILITY CROSSINGS FOR FLOODWALLS AND FLOODWALL FOUNDATIONS WITH OBSTRUCTIONS	478.00	C.Y.	3,300	0	$ 1,577,400	0
0347	ESCR-2.GC JET GROUTING FOR GATE CROSSING SEEPAGE BARRIER	821.00	C.Y.	3,000	0	$ 2,463,000	0
0348	ESCR-2.GCO JET GROUTING FOR FLOOD GATE FOUNDATIONS AND SEEPAGE BARRIER WITH OBSTRUCTIONS	42.00	C.Y.	4,000	0	$ 168,000	0
0349	ESCR-203.12 PVD OBSTRUCTION CLEARANCE FOR PREFABRICATED VERTICAL DRAIN INSTALLATION (PRE-DRILLING)	40,000.00	L.F.	30	0	$ 1,200,000	0
0350	ESCR-203.99 DSM OBSTRUCTION CLEARANCE FOR DEEP SOIL MIX COLUMN INSTALLATION (PRE-DRILLING)	10,000.00	L.F.	400	0	$ 4,000,000	0
0351	ESCR-3 DECK DRAIN FOR ESPLANADE	294.00	EACH	1,500	0	$ 441,000	0
0352	ESCR-30 CON EDISON VAULT MODIFICATION ALLOWANCE PRICE BID SHALL BE FOR THE FIXED SUM OF $ 16,795.00	1.00	F.S.	16,795	0	$ 16,795	0

BID SCHEDULE FORM

COL. 1 SEQ. NO	COL. 2 ITEM NUMBER and DESCRIPTION	COL. 3 ENGINEER'S ESTIMATE OF QUANTITY	COL. 4 UNIT	COL. 5 UNIT PRICE (IN FIGURES) DOLLARS	CTS	COL. 6 EXTENDED AMOUNT (IN FIGURES) DOLLARS	CTS
0353	ESCR-4 MOVABLE TL4 STAINLESS STEEL JERSEY BARRIERS	150.00	L.F.	2,000	0	$ 300,000	0
0354	ESCR-4.06 HP ES CONCRETE FOR ESPLANADE	15,365.00	C.Y.	2,500	0	$ 38,412,500	0
0355	ESCR-4.06 HP FL CONCRETE FOR FLOODWALL AND GATES	3,990.00	C.Y.	1,300	0	$ 5,187,000	0
0356	ESCR-4.06 PF CONCRETE PARK FEATURES	7,013.00	C.Y.	2,000	0	$ 14,026,000	0
0357	ESCR-4.06 UC CONCRETE FOR UTILITY CROSSINGS AND GATE SEEPAGE WALL CLOSURE POURS	238.00	C.Y.	1,500	0	$ 357,000	0
0358	ESCR-4.11 AS EARTH EXCAVATION FOR STRUCTURES	4,442.00	C.Y.	125	0	$ 555,250	0
0359	ESCR-4.11 CA FILL, PLACE MEASUREMENT	686,813.00	C.Y.	10	0	$ 6,868,130	0
0360	ESCR-4.11 CC SELECT GRANULAR FILL, PLACE MEASUREMENT	40.00	C.Y.	200	0	$ 8,000	0

BID SCHEDULE FORM

COL. 1 SEQ. NO	COL. 2 ITEM NUMBER and DESCRIPTION	COL. 3 ENGINEER'S ESTIMATE OF QUANTITY	COL. 4 UNIT	COL. 5 UNIT PRICE (IN FIGURES) DOLLARS	CTS	COL. 6 EXTENDED AMOUNT (IN FIGURES) DOLLARS	CTS
0361	ESCR-4.11 CW CRUSHED STONE FILL FOR L-WALL DRAINAGE, PLACE MEASUREMENT	225.00	C.Y.	200	0	$ 45,000	0
0362	ESCR-4.11 LW LIGHTWEIGHT FILL, PLACE MEASUREMENT	88,980.00	C.Y.	150	0	$ 13,347,000	0
0363	ESCR-4.11 M MONITORING OF SETTLEMENT AT FINISHED SUBGRADE FOR 3 MONTHS IN EAST RIVER PARK	1.00	L.S.	500,000	0	$ 500,000	0
0364	ESCR-4.11 RM EXCAVATION OF FILL ON AND BEHIND THE ESPLANADE	50,232.00	C.Y.	125	0	$ 6,279,000	0
0365	ESCR-4.11 RR EXCAVATION OF RIP RAP AND MISCELLANEOUS FILL	2,697.00	C.Y.	350	0	$ 943,950	0
0366	ESCR-4.14 EPOXY-COATING STEEL REINFORCEMENT	5,904,398.00	LBS.	2	0	$ 11,808,796	0
0367	ESCR-4.25 HAZ HAZARDOUS INVESTIGATION DERIVED WASTE	165.00	DRUMS	350	0	$ 57,750	0
0368	ESCR-4.25 IDW INVESTIGATION DERIVED WASTE (NON-HAZARDOUS)	165.00	DRUMS	130	0	$ 21,450	0

BID SCHEDULE FORM

COL. 1 SEQ. NO	COL. 2 ITEM NUMBER and DESCRIPTION	COL. 3 ENGINEER'S ESTIMATE OF QUANTITY	COL. 4 UNIT	COL. 5 UNIT PRICE (IN FIGURES) DOLLARS	CTS	COL. 6 EXTENDED AMOUNT (IN FIGURES) DOLLARS	CTS
0369	ESCR-4.25 MGP MGP-CONTAMINATED INVESTIGATION DERIVED WASTE (NON- HAZARDOUS)	83.00	DRUMS	530	0	$ 43,990	0
0370	ESCR-4.25 PFT60 ADD/DEDUCT PRICE FOR ADDITIONAL/REDUCED RECOVERY WELL FOOT (BEYOND/LESS THAN THE BASE RECOVERY WELL UNDER ESCR 4.25 RW60)	420.00	FOOT	300	0	$ 126,000	0
0371	ESCR-4.25 RW60 RECOVERY WELL INSTALLED TO 60 FEET BELOW GRADE	14.00	EACH	12,000	0	$ 168,000	0
0372	ESCR-5 STONE COLUMNS FOR GROUND IMPROVEMENT	35,075.00	C.Y.	600	0	$ 21,045,000	0
0373	ESCR-5.1 RIGID INCLUSIONS FOR GROUND IMPROVEMENT	26,050.00	C.Y.	1,000	0	$ 26,050,000	0
0374	ESCR-5.1.TP RIGID INCLUSIONS TEST PROGRAM (LOAD TESTS AND PIT TESTS)	1.00	L.S.	1,500,000	0	$ 1,500,000	0
0375	ESCR-5.1-LTP LOAD TRANSFER PLATFORM (WORKING PAD), REACHES G TO J	7,850.00	C.Y.	75	0	$ 588,750	0
0376	ESCR-5.1-OB OBSTRUCTION CLEARANCE (PRE-DRILLING)	1,475.00	L.F.	1,000	0	$ 1,475,000	0

BID SCHEDULE FORM

COL. 1 SEQ. NO	COL. 2 ITEM NUMBER and DESCRIPTION	COL. 3 ENGINEER'S ESTIMATE OF QUANTITY	COL. 4 UNIT	COL. 5 UNIT PRICE (IN FIGURES) DOLLARS	CTS	COL. 6 EXTENDED AMOUNT (IN FIGURES) DOLLARS	CTS
0377	ESCR-5.TP STONE COLUMNS TEST PROGRAM	1.00	L.S.	1,000,000	0	$ 1,000,000	0
0378	ESCR-50.61C42D66 42" D.I.P. CLASS 56 COMBINED SEWER IN JACKED 66" STEEL SLEEVE	119.00	L.F.	200,000	0	$ 23,800,000	0
0379	ESCR-50.A.1 FURNISH AND INSTALL FABRICATED STEEL FLOODGATE	1.00	L.S.	1,750,000	0	$ 1,750,000	0
0380	ESCR-50.A.2 FURNISH AND INSTALL FABRICATED STEEL FLOODGATE	1.00	L.S.	1,250,000	0	$ 1,250,000	0
0381	ESCR-50.K.1 FURNISH AND INSTALL FABRICATED STEEL FLOODGATE	1.00	L.S.	1,250,000	0	$ 1,250,000	0
0382	ESCR-50.K.2 FURNISH AND INSTALL FABRICATED STEEL FLOODGATE	1.00	L.S.	1,250,000	0	$ 1,250,000	0
0383	ESCR-50.K.5 FURNISH AND INSTALL FABRICATED STEEL FLOODGATE	1.00	L.S.	1,750,000	0	$ 1,750,000	0
0384	ESCR-50.K.6 FURNISH AND INSTALL FABRICATED STEEL FLOODGATE	1.00	L.S.	1,000,000	0	$ 1,000,000	0

BID SCHEDULE FORM

COL. 1 SEQ. NO	COL. 2 ITEM NUMBER and DESCRIPTION	COL. 3 ENGINEER'S ESTIMATE OF QUANTITY	COL. 4 UNIT	COL. 5 UNIT PRICE (IN FIGURES)		COL. 6 EXTENDED AMOUNT (IN FIGURES)	
				DOLLARS	CTS	DOLLARS	CTS
0385	ESCR-551.24.05 DT 24 IN. DIAMETER X 0.5 IN. WALL THICKNESS STEEL PIPE PILE - DYNAMIC PILE LOAD TESTING	2.00	PER TEST	10,000	0	$ 20,000	0
0386	ESCR-551.24.05 LT 24 IN. DIAMETER X 0.5 IN. WALL THICKNESS STEEL PIPE PILE - LATERAL PILE LOAD TESTING	3.00	PER TEST	80,000	0	$ 240,000	0
0387	ESCR-551.24.05 ST 24 IN. DIAMETER X 0.5 IN. WALL THICKNESS STEEL PIPE PILE - STATIC COMPRESSION TESTING	3.00	PER TEST	20,000	0	$ 60,000	0
0388	ESCR-551.24.05.C COATED 24 IN. DIAMETER X 0.5 IN. WALL THICKNESS STEEL PIPE PILE	3,326.00	L.F.	350	0	$ 1,164,100	0
0389	ESCR-551.24.05.CJG COATED 24 IN. DIAMETER X 0.5 IN. WALL THICKNESS STEEL PIPE PILE PLACED IN THE JET GROUT COLUMN	1,155.00	L.F.	400	0	$ 462,000	0
0390	ESCR-551.24.05.CT COATED 24 IN. DIAMETER X 0.5 IN. WALL THICKNESS STEEL PIPE PILE INSTALLED IN TIMBER CRIBBING	1,470.00	L.F.	340	0	$ 499,800	0
0391	ESCR-551.24.75 DT 4 IN. DIAMETER X 0.75 IN. WALL THICKNESS STEEL PIPE PILE - DYNAMIC PILE LOAD TESTING	5.00	PER TEST	20,000	0	$ 100,000	0
0392	ESCR-551.24.75.C COATED 24 IN. DIAMETER X 0.75 IN. WALL THICKNESS STEEL PIPE PILE	5,472.00	L.F.	550	0	$ 3,009,600	0

BID SCHEDULE FORM

COL. 1 SEQ. NO	COL. 2 ITEM NUMBER and DESCRIPTION	COL. 3 ENGINEER'S ESTIMATE OF QUANTITY	COL. 4 UNIT	COL. 5 UNIT PRICE (IN FIGURES) DOLLARS	CTS	COL. 6 EXTENDED AMOUNT (IN FIGURES) DOLLARS	CTS
0393	ESCR-551.30.01 DT 30 IN. DIAMETER X 1.0 IN. WALL THICKNESS STEEL PIPE PILE - DYNAMIC PILE LOAD TESTING	3.00	PER TEST	15,000	0	$ 45,000	0
0394	ESCR-551.30.01 RS ROCK SOCKET FOR 30 IN. DIAMETER X 1.0 IN. WALL THICKNESS STEEL PIPE PILE	27.00	EACH	75,000	0	$ 2,025,000	0
0395	ESCR-551.30.01.C COATED 30 IN. DIAMETER X 1.0 IN. WALL THICKNESS STEEL PIPE PILE PLACED IN THE JET GROUT COLUMN	4,865.00	L.F.	750	0	$ 3,648,750	0
0396	ESCR-551.30.01.CJG COATED 30 IN. DIAMETER X 1.0 IN. WALL THICKNESS STEEL PIPE PILE PLACED IN THE JET GROUT COLUMN	440.00	L.F.	750	0	$ 330,000	0
0397	ESCR-551.30.1 LT 30 IN. DIAMETER X 1.0 IN. WALL THICKNESS STEEL PIPE PILE - LATERAL PILE LOAD TESTING	1.00	PER TEST	80,000	0	$ 80,000	0
0398	ESCR-551.30.1 ST STATIC COMPRESSION TESTING	3.00	PER TEST	175,000	0	$ 525,000	0
0399	ESCR-551.36.05 DT 36 IN. DIAMETER X 0.5 IN. WALL THICKNESS STEEL PIPE PILE - DYNAMIC PILE LOAD TESTING	5.00	PER TEST	10,000	0	$ 50,000	0
0400	ESCR-551.36.05 RS ROCK SOCKET FOR 36 IN. DIAMETER X 0.5 IN. WALL THICKNESS STEEL PIPE PILE	43.00	EACH	50,000	0	$ 2,150,000	0

BID SCHEDULE FORM

COL. 1 SEQ. NO	COL. 2 ITEM NUMBER and DESCRIPTION	COL. 3 ENGINEER'S ESTIMATE OF QUANTITY	COL. 4 UNIT	COL. 5 UNIT PRICE (IN FIGURES) DOLLARS	CTS	COL. 6 EXTENDED AMOUNT (IN FIGURES) DOLLARS	CTS
0401	ESCR-551.36.05.C COATED 36 IN. DIAMETER X 0.5 IN. WALL THICKNESS STEEL PIPE PILE	15,378.00	L.F.	1,100	0	$ 16,915,800	0
0402	ESCR-551.36.05.CD COATED 36 IN. DIAMETER X 0.5 IN. WALL THICKNESS STEEL PIPE PILE INSTALLED IN PREDRILLED LOCATIONS	10,864.00	L.F.	1,100	0	$ 11,950,400	0
0403	ESCR-551.36.05.CS COATED 36 IN. DIAMETER X 0.5 IN. WALL THICKNESS STEEL PIPE PILE WITH INTERLOCK SEALANT INSTALLED	1,704.00	L.F.	900	0	$ 1,533,600	0
0404	ESCR-551.36.05.CSD COATED 36 IN. DIAMETER X 0.5 IN. WALL THICKNESS STEEL PIPE PILE WITH INTERLOCK SEALANT INSTALLED IN PREDRILLED LOCATIONS	1,704.00	L.F.	900	0	$ 1,533,600	0
0405	ESCR-551.42.05 DT 42 IN. DIAMETER X 0.5 IN. WALL THICKNESS STEEL PIPE PILE - DYNAMIC PILE LOAD TESTING	26.00	PER TEST	10,000	0	$ 260,000	0
0406	ESCR-551.42.06 42 IN. DIAMETER X 0.625 IN. WALL THICKNESS STEEL PIPE PILE	1,533.00	L.F.	800	0	$ 1,226,400	0
0407	ESCR-551.42.06 D 42 IN. DIAMETER X 0.625 IN. WALL THICKNESS STEEL PIPE PILE INSTALLED IN PREDRILLED LOCATION	1,022.00	L.F.	800	0	$ 817,600	0
0408	ESCR-551.993.9625 9.625 IN. O.D. X 0.54 IN. WALL THICKNESS MICROPILE	10,448.00	L.F.	400	0	$ 4,179,200	0

BID SCHEDULE FORM

BID SCHEDULE FORM

COL. 1 SEQ. NO	COL. 2 ITEM NUMBER and DESCRIPTION	COL. 3 ENGINEER'S ESTIMATE OF QUANTITY	COL. 4 UNIT	COL. 5 UNIT PRICE (IN FIGURES) DOLLARS	CTS	COL. 6 EXTENDED AMOUNT (IN FIGURES) DOLLARS	CTS
0409	ESCR-551.993.9625C PILE LOAD TESTING FOR 9.625 IN. O.D. X 0.54 IN. WALL THICKNESS MICROPILE - STATIC COMPRESSION TEST	3.00	PER TEST	50,000	0	$ 150,000	0
0410	ESCR-551.993.9625T PILE LOAD TESTING FOR 9.625 IN. O.D. X 0.54 IN. WALL THICKNESS MICROPILE - STATIC TENSION TEST	1.00	PER TEST	50,000	0	$ 50,000	0
0411	ESCR-552.11 19C COATED NZ19 OR EQUAL STEEL SHEET PILE WALL INSTALLED USING NON-PRESS-IN METHODS	1,213.00	S.F.	85	0	$ 103,105	0
0412	ESCR-552.11 20 BARE AZ-20-700N OR EOUAL STEEL SHEET PILE INSTALLED USING NON-PRESS-IN METHODS	54,681.00	S.F.	70	0	$ 3,827,670	0
0413	ESCR-552.11 20 C COATED AZ-20-700N OR EQUAL STEEL SHEET PILE INSTALLED USING NON-PRESS-IN METHODS	194,862.00	S.F.	100	0	$ 19,486,200	0
0414	ESCR-552.11 20CB COATED AZ-20-700N OR EQUAL STEEL SHEET PILE INSTALLED IN CONCRETE BULKHEAD USING NON-PRESS-IN METHOD	1,630.00	S.F.	75	0	$ 122,250	0
0415	ESCR-552.11 20CT COATED AZ-20-700N OR EQUAL STEEL SHEET PILE INSTALLED IN TIMBER CRIBBING USING NON-PRESS-IN METHOD	18,234.00	S.F.	150	0	$ 2,735,100	0

BID SCHEDULE FORM

COL. 1 SEQ. NO	COL. 2 ITEM NUMBER and DESCRIPTION	COL. 3 ENGINEER'S ESTIMATE OF QUANTITY	COL. 4 UNIT	COL. 5 UNIT PRICE (IN FIGURES) DOLLARS	CTS	COL. 6 EXTENDED AMOUNT (IN FIGURES) DOLLARS	CTS
0416	ESCR-552.11 3.0TR 3.0 IN. DIAMETER HOT-DIP GALVANIZED TIE ROD AND ALL APPURTENANCES	47,550.00	L.F.	80	0	$ 3,804,000	0
0417	ESCR-552.11 4219C COATED PAZ42/NZ19 OR EOUAL COMBI-WALL INSTALLED	133,053.00	S.F.	200	0	$ 26,610,600	0
0418	ESCR-552.11 4219CD COATED PAZ42/NZ19 OR EQUAL COMBI-WALL INSTALLED IN PREDRILLED LOCATIONS	37,137.00	S.F.	210	0	$ 7,798,770	0
0419	ESCR-552.11 4219CI COATED PAZ42/NZ19 OR EQUAL COMBI-WALL WITH INTERLOCK SEALANT INSTALLED	72,881.00	S.F.	210	0	$ 15,305,010	0
0420	ESCR-552.11 46CIP COATED AZ-46-700N OR EQUAL STEEL SHEET PILE WITH INTERLOCK SEALANT INSTALLED USING THE PRESS-IN METHOD	10,459.00	S.F.	200	0	$ 2,091,800	0
0421	ESCR-552.11 46CP COATED AZ-46-700N OR EQUAL STEEL SHEET PILE INSTALLED USING THE PRESS-IN METHOD	76,173.00	S.F.	200	0	$ 15,234,600	0
0422	ESCR-552.11 46CPL COATED AZ-46-700N OR EQUAL STEEL SHEET PILE INSTALLED USING THE PRESS-IN METHOD UNDER LOW HEADROOM	15,810.00	S.F.	450	0	$ 7,114,500	0

BID SCHEDULE FORM

COL. 1 SEQ. NO	COL. 2 ITEM NUMBER and DESCRIPTION	COL. 3 ENGINEER'S ESTIMATE OF QUANTITY	COL. 4 UNIT	COL. 5 UNIT PRICE (IN FIGURES) DOLLARS	CTS	COL. 6 EXTENDED AMOUNT (IN FIGURES) DOLLARS	CTS
0423	ESCR-552.11 46CT COATED AZ-46-700N OR EQUAL STEEL SHEET PILE INSTALLED IN TIMBER CRIBBING USING NON-PRESS-IN METHODS	9,765.00	S.F.	200	0	$ 1,953,000	0
0424	ESCR-557.44 PRECAST CONCRETE SLAB UNIT	61.00	S.Y.	3,200	0	$ 195,200	0
0425	ESCR-564 STRUCTURAL STEEL (UNCOATED)	291,813.00	LBS.	5	0	$ 1,459,065	0
0426	ESCR-564.CT STRUCTURAL STEEL (COATED)	283,509.00	LBS.	5	0	$ 1,417,545	0
0427	ESCR-564.G STRUCTURAL STEEL (GALVANIZED)	11,528.00	LBS.	5	0	$ 57,640	0
0428	ESCR-567.LG LONGITUDINAL EXPANSION JOINT BETWEEN THE ESPLANADE AND CUT-OFF WALL	4,988.00	L.F.	320	0	$ 1,596,160	0
0429	ESCR-567.PC TRANSVERSE EXPANSION JOINT AT PILE CAPS BETWEEN THE ESPLANADE SPANS	2,297.00	L.F.	170	0	$ 390,490	0
0430	ESCR-570 CONCRETE DETERRENT FURNITURE	15.00	EACH	12,000	0	$ 180,000	0

BID SCHEDULE FORM

COL. 1 SEQ. NO	COL. 2 ITEM NUMBER and DESCRIPTION	COL. 3 ENGINEER'S ESTIMATE OF QUANTITY	COL. 4 UNIT	COL. 5 UNIT PRICE (IN FIGURES) DOLLARS	CTS	COL. 6 EXTENDED AMOUNT (IN FIGURES) DOLLARS	CTS
0431	ESCR-6.20 RIP RAP ROCK	1,164.00	C.Y.	400	0	$ 465,600	0
0432	ESCR-6.27 A DEMOLITION EXISTING ESPLANADE TYPE A	960.00	L.F.	2,750	0	$ 2,640,000	0
0433	ESCR-6.27 AE DEMOLITION OF STRUCTURE - AMPHITHEATRER ELECTRICAL SHED	1.00	L.S.	250,000	0	$ 250,000	0
0434	ESCR-6.27 C DEMOLITION EXISTING ESPLANADE TYPE C-1 AND C-2	2,310.00	L.F.	2,000	0	$ 4,620,000	0
0435	ESCR-6.27 CB DEMOLITION OF THE EXISTING CONCRETE BARRIER	248.00	L.F.	30	0	$ 7,440	0
0436	ESCR-6.27 CB.E DEMOLITION OF THE EXISTING EMBEDDED CONCRETE BARRIER	1,430.00	L.F.	40	0	$ 57,200	0
0437	ESCR-6.27 CU DEMOLITION OF THE EXISTING CONCRETE CURB	2,910.00	L.F.	20	0	$ 58,200	0
0438	ESCR-6.27 D DEMOLITION EXISTING ESPLANADE TYPE D	1,510.00	L.F.	2,750	0	$ 4,152,500	0

BID SCHEDULE FORM

COL. 1 SEQ. NO	COL. 2 ITEM NUMBER and DESCRIPTION	COL. 3 ENGINEER'S ESTIMATE OF QUANTITY	COL. 4 UNIT	COL. 5 UNIT PRICE (IN FIGURES) DOLLARS	CTS	COL. 6 EXTENDED AMOUNT (IN FIGURES) DOLLARS	CTS
0439	ESCR-6.27 EXNE DEMOLITION OF THE EXISTING NORTH EMBAYMENT (REMOVAL LIMITS AS SHOWN ON THE CONTRACT DRAWINGS)	300.00	L.F.	5,000	0	$ 1,500,000	0
0440	ESCR-6.27 EXSE DEMOLITION OF THE EXISTING SOUTH EMBAYMENT (REMOVAL LIMITS AS SHOWN ON THE CONTRACT DRAWINGS)	228.00	L.F.	3,750	0	$ 855,000	0
0441	ESCR-6.27 F DEMOLITION EXISTING ESPLANADE TYPE F	22.00	L.F.	13,000	0	$ 286,000	0
0442	ESCR-6.27 FBI DEMOLITION OF STRUCTURE - FIRE BOATHOUSE IRRIGATION PUMP SHED	1.00	L.S.	500,000	0	$ 500,000	0
0443	ESCR-6.27 G DEMOLITION EXISTING ESPLANADE TYPE G	5.00	L.F.	40,000	0	$ 200,000	0
0444	ESCR-6.27 PRNE DEMOLITION OF THE EXISTING ESPLANADE STRUCTURE FOR THE PROPOSED NORTH EMBAYMENT (REMOVAL LIMITS AS SHOWN ON THE CONTRACT DRAWINGS)	370.00	L.F.	7,500	0	$ 2,775,000	0
0445	ESCR-6.27 PRSE DEMOLITION OF THE EXISTING ESPLANADE STRUCTURE FOR THE PROPOSED SOUTH EMBAYMENT (REMOVAL LIMITS AS SHOWN ON THE CONTRACT DRAWINGS)	345.00	L.F.	7,500	0	$ 2,587,500	0
0446	ESCR-6.27 S DEMOLITION OF STRUCTURES	190.00	C.Y.	400	0	$ 76,000	0

BID SCHEDULE FORM

COL. 1 SEQ. NO	COL. 2 ITEM NUMBER and DESCRIPTION	COL. 3 ENGINEER'S ESTIMATE OF QUANTITY	COL. 4 UNIT	COL. 5 UNIT PRICE (IN FIGURES) DOLLARS	CTS	COL. 6 EXTENDED AMOUNT (IN FIGURES) DOLLARS	CTS
0447	ESCR-6.27 SABSE DEMOLITION OF STRUCTURE - AMPHITHEATRE BANDSHELL AND SEATING AREA	1.00	L.S.	1,000,000	0	$ 1,000,000	0
0448	ESCR-6.27 SB "REMOVAL OF THE WILLIAMSBURG BRIDGE SECURITY BOLLARDS (removal limits as shown on the Contract Drawings)"	207.00	EACH	375	0	$ 77,625	0
0449	ESCR-6.27 SCS DEMOLITION OF STRUCTURE - COMFORT STATION	1.00	L.S.	1,000,000	0	$ 1,000,000	0
0450	ESCR-6.27 SFE DEMOLITION OF STRUCTURE - SPORTS FIELD ELECTRICAL SHED	1.00	L.S.	100,000	0	$ 100,000	0
0451	ESCR-6.27 SGH DEMOLITION OF STRUCTURE - EAST RIVER HOUSING GUARD HOUSE	1.00	L.S.	250,000	0	$ 250,000	0
0452	ESCR-6.27 STE DEMOLITION OF STRUCTURE - TENNIS BUILDING	1.00	L.S.	500,000	0	$ 500,000	0
0453	ESCR-6.27 STR DEMOLITION OF STRUCTURE - TRACK BUILDING	1.00	L.S.	500,000	0	$ 500,000	0
0454	ESCR-6.27 TC DEMOLITION OF EXISTING ROCK FILLED TIMBER CRIBBING ON GRAVITY WALL	3,889.00	C.Y.	1,000	0	$ 3,889,000	0

BID SCHEDULE FORM

COL. 1 SEQ. NO	COL. 2 ITEM NUMBER and DESCRIPTION	COL. 3 ENGINEER'S ESTIMATE OF QUANTITY	COL. 4 UNIT	COL. 5 UNIT PRICE (IN FIGURES) DOLLARS	CTS	COL. 6 EXTENDED AMOUNT (IN FIGURES) DOLLARS	CTS
0455	ESCR-6.27 TP REMOVAL OF EXISTING TIMBER PILE	3,021.00	EACH	500	0	$ 1,510,500	0
0456	ESCR-6.27 U REMOVAL OF MISCELLANEOUS UTILITY	1.00	EACH	50,000	0	$ 50,000	0
0457	ESCR-6.68 PLASTIC FILTER FABRIC FOR REVETMENT	3,022.00	S.Y.	15	0	$ 45,330	0
0458	ESCR-60.29 INSTALLATION OF ANODE	1,771.00	EACH	3,400	0	$ 6,021,400	0
0459	ESCR-61CW CONCRETE SECURITY WALL	167.00	C.Y.	1,500	0	$ 250,500	0
0460	ESCR-61F FIXED BOLLARD	168.00	EACH	2,200	0	$ 369,600	0
0461	ESCR-61R RETRACTABLE BOLLARD	9.00	EACH	5,000	0	$ 45,000	0
0462	ESCR-7.13 WF1 MARITIME LOAD-OUT FACILITY	24.00	MONTH	5,000	0	$ 120,000	0

BID SCHEDULE FORM

COL. 1 SEQ. NO	COL. 2 ITEM NUMBER and DESCRIPTION	COL. 3 ENGINEER'S ESTIMATE OF QUANTITY	COL. 4 UNIT	COL. 5 UNIT PRICE (IN FIGURES) DOLLARS	CTS	COL. 6 EXTENDED AMOUNT (IN FIGURES) DOLLARS	CTS
0463	ESCR-7.13 WF2 INSPECTION BOAT	30.00	MONTH	30,000	0	$ 900,000	0
0464	ESCR-7.13 WF3 TUG BOAT	24.00	MONTH	500,000	0	$ 12,000,000	0
0465	ESCR-7.13 WF4 WATERFRONT OPERATIONS FACILITY	40.00	MONTH	125,000	0	$ 5,000,000	0
0466	ESCR-7.18 CONTROLLED LOW STRENGTH MATERIAL	620.00	C.Y.	350	0	$ 217,000	0
0467	ESCR-76.11CR-A CONSTRUCTION REPORT FOR REACH A	1.00	L.S.	5,000	0	$ 5,000	0
0468	ESCR-76.11CR-B CONSTRUCTION REPORT FOR REACH B	1.00	L.S.	5,000	0	$ 5,000	0
0469	ESCR-76.11CR-C CONSTRUCTION REPORT FOR REACH C	1.00	L.S.	5,000	0	$ 5,000	0
0470	ESCR-76.11CR-D CONSTRUCTION REPORT FOR REACH D	1.00	L.S.	5,000	0	$ 5,000	0

BID SCHEDULE FORM

COL. 1 SEQ. NO	COL. 2 ITEM NUMBER and DESCRIPTION	COL. 3 ENGINEER'S ESTIMATE OF QUANTITY	COL. 4 UNIT	COL. 5 UNIT PRICE (IN FIGURES) DOLLARS	CTS	COL. 6 EXTENDED AMOUNT (IN FIGURES) DOLLARS	CTS
0471	ESCR-76.11CR-E CONSTRUCTION REPORT FOR REACH E	1.00	L.S.	5,000	0	$ 5,000	0
0472	ESCR-76.11CR-E.WB CONSTRUCTION REPORT FOR THE WILLIAMSBURG BRIDGE FOOTINGS IN REACH E	1.00	L.S.	5,000	0	$ 5,000	0
0473	ESCR-76.11CR-F CONSTRUCTION REPORT FOR REACH F	1.00	L.S.	5,000	0	$ 5,000	0
0474	ESCR-76.11CR-G CONSTRUCTION REPORT FOR REACH G	1.00	L.S.	5,000	0	$ 5,000	0
0475	ESCR-76.11CR-H CONSTRUCTION REPORT FOR REACH H	1.00	L.S.	5,000	0	$ 5,000	0
0476	ESCR-76.11CR-I CONSTRUCTION REPORT FOR REACH I	1.00	L.S.	5,000	0	$ 5,000	0
0477	ESCR-76.11CR-J CONSTRUCTION REPORT FOR REACH J	1.00	L.S.	5,000	0	$ 5,000	0
0478	ESCR-76.11CR-K CONSTRUCTION REPORT FOR REACH K	1.00	L.S.	5,000	0	$ 5,000	0

BID SCHEDULE FORM

COL. 1 SEQ. NO	COL. 2 ITEM NUMBER and DESCRIPTION	COL. 3 ENGINEER'S ESTIMATE OF QUANTITY	COL. 4 UNIT	COL. 5 UNIT PRICE (IN FIGURES) DOLLARS	CTS	COL. 6 EXTENDED AMOUNT (IN FIGURES) DOLLARS	CTS
0479	ESCR-76.11CR-K.CT CONSTRUCTION REPORT FOR THE CON ED B-CONVEYOR TUNNEL IN REACH K	1.00	L.S.	5,000	0	$ 5,000	0
0480	ESCR-76.11CR-K.MT CONSTRUCTION REPORT FOR THE MTA L-TRAIN TUNNEL IN REACH K	1.00	L.S.	5,000	0	$ 5,000	0
0481	ESCR-76.21MR-A MONITORING AND POST-CONSTRUCTION REPORT FOR REACH A	1.00	L.S.	5,000	0	$ 5,000	0
0482	ESCR-76.21MR-B MONITORING AND POST-CONSTRUCTION REPORT FOR REACH B	1.00	L.S.	5,000	0	$ 5,000	0
0483	ESCR-76.21MR-C MONITORING AND POST-CONSTRUCTION REPORT FOR REACH C	1.00	L.S.	5,000	0	$ 5,000	0
0484	ESCR-76.21MR-D MONITORING AND POST-CONSTRUCTION REPORT FOR REACH D	1.00	L.S.	5,000	0	$ 5,000	0
0485	ESCR-76.21MR-E MONITORING AND POST-CONSTRUCTION REPORT FOR REACH E	1.00	L.S.	5,000	0	$ 5,000	0

BID SCHEDULE FORM

COL. 1 SEQ. NO	COL. 2 ITEM NUMBER and DESCRIPTION	COL. 3 ENGINEER'S ESTIMATE OF QUANTITY	COL. 4 UNIT	COL. 5 UNIT PRICE (IN FIGURES) DOLLARS	CTS	COL. 6 EXTENDED AMOUNT (IN FIGURES) DOLLARS	CTS
0486	ESCR-76.21MR-E.WB MONITORING AND POST-CONSTRUCTION REPORT FOR THE WILLIAMSBURG BRIDGE FOOTINGS IN REACH E	1.00	L.S.	5,000	0	$ 5,000	0
0487	ESCR-76.21MR-F MONITORING AND POST-CONSTRUCTION REPORT FOR REACH F	1.00	L.S.	5,000	0	$ 5,000	0
0488	ESCR-76.21MR-G MONITORING AND POST-CONSTRUCTION REPORT FOR REACH G	1.00	L.S.	5,000	0	$ 5,000	0
0489	ESCR-76.21MR-H MONITORING AND POST-CONSTRUCTION REPORT FOR REACH H	1.00	L.S.	5,000	0	$ 5,000	0
0490	ESCR-76.21MR-I MONITORING AND POST-CONSTRUCTION REPORT FOR REACH I	1.00	L.S.	5,000	0	$ 5,000	0
0491	ESCR-76.21MR-J MONITORING AND POST-CONSTRUCTION REPORT FOR REACH J	1.00	L.S.	5,000	0	$ 5,000	0
0492	ESCR-76.21MR-K MONITORING AND POST-CONSTRUCTION REPORT FOR REACH K	1.00	L.S.	5,000	0	$ 5,000	0
0493	ESCR-76.21MR-K.CT MONITORING AND POST-CONSTRUCTION REPORT FOR THE CON ED B-CONVEYOR TUNNEL IN REACH K	1.00	L.S.	5,000	0	$ 5,000	0

BID SCHEDULE FORM

COL. 1 SEQ. NO	COL. 2 ITEM NUMBER and DESCRIPTION	COL. 3 ENGINEER'S ESTIMATE OF QUANTITY	COL. 4 UNIT	COL. 5 UNIT PRICE (IN FIGURES) DOLLARS	CTS	COL. 6 EXTENDED AMOUNT (IN FIGURES) DOLLARS	CTS
0494	ESCR-76.21MR-K.MT MONITORING AND POST-CONSTRUCTION REPORT FOR THE MTA L- TRAIN TUNNEL IN REACH K	1.00	L.S.	5,000	0	$ 5,000	0
0495	ESCR-77 ECO ARMOR BLOCK	185.00	EACH	3,200	0	$ 592,000	0
0496	ESCR-77-1 ECO TIDAL POOL ARMOR	31.00	EACH	5,000	0	$ 155,000	0
0497	ESCR-77-2 ECO SEA PILLAR	30.00	EACH	25,000	0	$ 750,000	0
0498	ESCR-8.01 C1 HANDLING, TRANSPORTING, AND DISPOSAL OF NON-HAZARDOUS CONTAMINATED SOIL	2,000.00	TONS	90	0	$ 180,000	0
0499	ESCR-8.01 C1MGP HANDLING, TRANSPORTING, AND DISPOSAL OF NON-HAZARDOUS MGP CONTAMINATED SOIL	2,000.00	TONS	110	0	$ 220,000	0
0500	ESCR-8.01 C2 SAMPLING AND TESTING OF CONTAMINATED/POTENTIALLY HAZARDOUS SOIL FOR DISPOSAL PURPOSES	200.00	SETS	200	0	$ 40,000	0

BID SCHEDULE FORM

COL. 1 SEQ. NO	COL. 2 ITEM NUMBER and DESCRIPTION	COL. 3 ENGINEER'S ESTIMATE OF QUANTITY	COL. 4 UNIT	COL. 5 UNIT PRICE (IN FIGURES) DOLLARS	CTS	COL. 6 EXTENDED AMOUNT (IN FIGURES) DOLLARS	CTS
0501	ESCR-8.01 H HANDLING, TRANSPORTING, AND DISPOSAL OF HAZARDOUS SOIL	2,000.00	TONS	250	0	$ 500,000	0
0502	ESCR-8.01 S HEALTH AND SAFETY	1.00	L.S.	150,000	0	$ 150,000	0
0503	ESCR-8.01 W1 REMOVAL, TREATMENT, AND DISCHARGE/DISPOSAL OF CONTAMINATED WATER	367.00	DAY	3,850	0	$ 1,412,950	0
0504	ESCR-8.01 W2-1 NYCDEP - SAMPLING AND TESTING OF CONTAMINATED WATER	100.00	SETS	50	0	$ 5,000	0
0505	ESCR-8.07 TEMPORARY PEDESTRIAN BRIDGE	1.00	L.S.	10,000,000	0	$ 10,000,000	0
0506	ESCR-901-SSVS SSVS WORK-COMFORT STATION	1.00	EACH	150,000	0	$ 150,000	0
0507	ESCR-902-SSVS SSVS WORK-M&O 2	1.00	EACH	100,000	0	$ 100,000	0
0508	ESCR-903-SSVS SSVS WORK-M&O 3	1.00	EACH	100,000	0	$ 100,000	0

BID SCHEDULE FORM

COL. 1 SEQ. NO	COL. 2 ITEM NUMBER and DESCRIPTION	COL. 3 ENGINEER'S ESTIMATE OF QUANTITY	COL. 4 UNIT	COL. 5 UNIT PRICE (IN FIGURES) DOLLARS	CTS	COL. 6 EXTENDED AMOUNT (IN FIGURES) DOLLARS	CTS
0509	ESCR-904-SSVS SSVS WORK-TENNIS BLDG	1.00	EACH	250,000	0	$ 250,000	0
0510	ESCR-905-SSVS SSVS WORK-TRACK BLDG	1.00	EACH	750,000	0	$ 750,000	0
0511	ESCR-9230 FURNISHING, DELIVERING AND INSTALLING CON-ED PIPE-TO-WALL PENETRATION SEAL, INCLUDING SLEEVE AND ANCHOR/WATER STOP PLATE	54.00	EACH	5,000	0	$ 270,000	0
0512	ESCR-HW-901 TEMPORARY MEASURES REQUIRED BY PHASING	1.00	L.S.	4,500,000	0	$ 4,500,000	0
0513	HW-900 ALLOWANCE FOR MAXIMUM INCENTIVE FOR EARLY COMPLETION PRICE BID SHALL BE FOR THE FIXED SUM OF $ 4,500,000.00	1.00	F.S.	4,500,000	0	$ 4,500,000	0
0514	HW-900H ALLOWANCE FOR CITY WORK ACCELERATION PRICE BID SHALL BE FOR THE FIXED SUM OF $ 10,500,000.00	1.00	F.S.	10,500,000	0	$ 10,500,000	0

BID SCHEDULE FORM

COL. 1 SEQ. NO	COL. 2 ITEM NUMBER and DESCRIPTION	COL. 3 ENGINEER'S ESTIMATE OF QUANTITY	COL. 4 UNIT	COL. 5 UNIT PRICE (IN FIGURES) DOLLARS	CTS	COL. 6 EXTENDED AMOUNT (IN FIGURES) DOLLARS	CTS
0515	HW-908 ALLOWANCE FOR EXTRA WORK DUE TO ARCHAEOLOGICAL DISCOVERIES PRICE BID SHALL BE FOR THE FIXED SUM OF $ 1,000,000.00	1.00	F.S.	1,000,000	0	$ 1,000,000	0
0516	HW-914 ALLOWANCE FOR WAYFINDING TOTEMS PRICE BID SHALL BE FOR THE FIXED SUM OF $ 111,600.00	1.00	F.S.	111,600	0	$ 111,600	0
0517	JB 100.1 (CABV) UTILITIES CROSSING TRENCH FOR CATCH BASIN CHUTE CONNECTION AND/OR TEST PIT (TYPE .1) Unit price bid shall not be less than: $ 525.00	1.00	EACH	1,000	0	$ 1,000	0
0518	JB 100.1(CE) UTILITIES CROSSING TRENCH FOR CATCH BASIN CHUTE CONNECTION AND/OR TEST PIT (TYPE .1) Unit price bid shall not be less than: $ 355.00	10.00	EACH	850	0	$ 8,500	0
0519	JB 100.1(ECS) UTILITIES CROSSING TRENCH FOR CATCH BASIN CHUTE CONNECTION AND/OR TEST PIT (TYPE .1) Unit price bid shall not be less than: $ 595.00	1.00	EACH	850	0	$ 850	0
0520	JB 100.2(CE) UTILITIES CROSSING TRENCH FOR CATCH BASIN CHUTE CONNECTION AND/OR TEST PIT (TYPE .2) Unit price bid shall not be less than: $ 666.00	5.00	EACH	1,100	0	$ 5,500	0

BID SCHEDULE FORM

COL. 1 SEQ. NO	COL. 2 ITEM NUMBER and DESCRIPTION	COL. 3 ENGINEER'S ESTIMATE OF QUANTITY	COL. 4 UNIT	COL. 5 UNIT PRICE (IN FIGURES)		COL. 6 EXTENDED AMOUNT (IN FIGURES)	
				DOLLARS	CTS	DOLLARS	CTS
0521	JB 100.3(CE) UTILITIES CROSSING TRENCH FOR CATCH BASIN CHUTE CONNECTION AND/OR TEST PIT (TYPE .3) **Unit price bid shall not be less than: $ 987.00**	3.00	EACH	1,800	0	$ 5,400	0
0522	JB 1006V(CE) 6" VERTICAL OR ROLLED WATER MAIN OFFSET **Unit price bid shall not be less than: $ 3,638.00**	4.00	EACH	7,800	0	$ 31,200	0
0523	JB 1008V(CE) 8" VERTICAL OR ROLLED WATER MAIN OFFSET **Unit price bid shall not be less than: $ 4,799.00**	2.00	EACH	11,700	0	$ 23,400	0
0524	JB 101.1(CE) UTILITIES CROSSING TRENCH FOR SEWERS OVER 12" TO 24" DIAMETER (TYPE .1) **Unit price bid shall not be less than: $ 3,021.00**	3.00	EACH	3,500	0	$ 10,500	0
0525	JB 101.2(CE) UTILITIES CROSSING TRENCH FOR SEWERS OVER 12" TO 24" DIAMETER (TYPE .2) **Unit price bid shall not be less than: $ 3,778.00**	2.00	EACH	4,800	0	$ 9,600	0
0526	JB 101.3(CE) UTILITIES CROSSING TRENCH FOR SEWERS OVER 12" TO 24" DIAMETER (TYPE .3) **Unit price bid shall not be less than: $ 4,974.00**	8.00	EACH	7,150	0	$ 57,200	0

BID SCHEDULE FORM

COL. 1 SEQ. NO	COL. 2 ITEM NUMBER and DESCRIPTION	COL. 3 ENGINEER'S ESTIMATE OF QUANTITY	COL. 4 UNIT	COL. 5 UNIT PRICE (IN FIGURES) DOLLARS	CTS	COL. 6 EXTENDED AMOUNT (IN FIGURES) DOLLARS	CTS
0527	JB 1012V(CE) 12" VERITCAL OR ROLLED WATER MAIN OFFSET Unit price bid shall not be less than: $ 7,296.00	3.00	EACH	15,800	0	$ 47,400	0
0528	JB 102.1(CE) UTILITIES CROSSING TRENCH FOR SEWERS OVER 24" TO 36" DIAMETER (TYPE .1) Unit price bid shall not be less than: $ 3,120.00	1.00	EACH	3,500	0	$ 3,500	0
0529	JB 102.2(CE) UTILITIES CROSSING TRENCH FOR SEWERS OVER 24" TO 36" DIAMETER (TYPE .2) Unit price bid shall not be less than: $ 3,802.00	3.00	EACH	4,800	0	$ 14,400	0
0530	JB 103.1 (CABV) UTILITIES CROSSING TRENCH FOR SEWERS OVER 36" TO 48" DIAMETER (TYPE .1) Unit price bid shall not be less than: $ 3,000.00	1.00	EACH	3,500	0	$ 3,500	0
0531	JB 103.1(CE) UTILITIES CROSSING TRENCH FOR SEWERS OVER 36" TO 48" DIAMETER (TYPE .1) Unit price bid shall not be less than: $ 3,439.00	3.00	EACH	4,000	0	$ 12,000	0
0532	JB 103.2(CE) UTILITIES CROSSING TRENCH FOR SEWERS OVER 36" TO 48" DIAMETER (TYPE .2) Unit price bid shall not be less than: $ 4,226.00	10.00	EACH	5,700	0	$ 57,000	0

BID SCHEDULE FORM

COL. 1 SEQ. NO	COL. 2 ITEM NUMBER and DESCRIPTION	COL. 3 ENGINEER'S ESTIMATE OF QUANTITY	COL. 4 UNIT	COL. 5 UNIT PRICE (IN FIGURES) DOLLARS	CTS	COL. 6 EXTENDED AMOUNT (IN FIGURES) DOLLARS	CTS
0533	JB 103.3(CE) UTILITIES CROSSING TRENCH FOR SEWERS OVER 36" TO 48" DIAMETER (TYPE .3) **Unit price bid shall not be less than: $ 5,305.00**	6.00	EACH	9,600	0	$ 57,600	0
0534	JB 105.2(CE) UTILITIES CROSSING TRENCH FOR SEWERS OVER 54" TO 60" DIAMETER (TYPE .2) **Unit price bid shall not be less than: $ 4,990.00**	1.00	EACH	7,150	0	$ 7,150	0
0535	JB 105.3(CE) UTILITIES CROSSING TRENCH FOR SEWERS OVER 54" TO 60" DIAMETER (TYPE .3) **Unit price bid shall not be less than: $ 6,213.00**	2.00	EACH	9,600	0	$ 19,200	0
0536	JB 106.2(CE) UTILITIES CROSSING TRENCH FOR SEWERS OVER 60" TO 72" DIAMETER (TYPE .2) **Unit price bid shall not be less than: $ 5,297.00**	1.00	EACH	7,150	0	$ 7,150	0
0537	JB 106.3(CE) UTILITIES CROSSING TRENCH FOR SEWERS OVER 60" TO 72" DIAMETER (TYPE .3) **Unit price bid shall not be less than: $ 6,564.00**	2.00	EACH	9,600	0	$ 19,200	0
0538	JB 108.1(CE) UTILITIES CROSSING TRENCH FOR WATER MAIN UP TO AND INCLUDING 12" DIAMETER (TYPE .1) **Unit price bid shall not be less than: $ 485.00**	7.00	EACH	1,170	0	$ 8,190	0

BID SCHEDULE FORM

COL. 1 SEQ. NO	COL. 2 ITEM NUMBER and DESCRIPTION	COL. 3 ENGINEER'S ESTIMATE OF QUANTITY	COL. 4 UNIT	COL. 5 UNIT PRICE (IN FIGURES) DOLLARS	CTS	COL. 6 EXTENDED AMOUNT (IN FIGURES) DOLLARS	CTS
0539	JB 108.2(CE) UTILITIES CROSSING TRENCH FOR WATER MAIN UP TO AND INCLUDING 12" DIAMETER (TYPE .2) Unit price bid shall not be less than: $ 1,523.00	8.00	EACH	1,550	0	$ 12,400	0
0540	JB 108.3(CE) UTILITIES CROSSING TRENCH FOR WATER MAIN UP TO AND INCLUDING 12" DIAMETER (TYPE .3) Unit price bid shall not be less than: $ 2,476.00	13.00	EACH	2,500	0	$ 32,500	0
0541	JB 117B.1(CE) UTILITIES CROSSING SHEET PILES FOR FLOOD WALL/GATE (TYPE .1) Unit price bid shall not be less than: $ 4,771.00	3.00	EACH	40,000	0	$ 120,000	0
0542	JB 117B.2(CE) UTILITIES CROSSING SHEET PILES FOR FLOOD WALL/GATE (TYPE .2) Unit price bid shall not be less than: $ 5,764.00	12.00	EACH	40,000	0	$ 480,000	0
0543	JB 117B.3(CE) UTILITIES CROSSING SHEET PILES FOR FLOOD WALL/GATE (TYPE .3) Unit price bid shall not be less than: $ 7,019.00	1.00	EACH	40,000	0	$ 40,000	0
0544	JB 117B.4(CE) UTILITIES CROSSING SHEET PILES FOR FLOOD WALL/GATE (TYPE .4) Unit price bid shall not be less than: $ 8,260.00	3.00	EACH	40,000	0	$ 120,000	0

BID SCHEDULE FORM

COL. 1 SEQ. NO	COL. 2 ITEM NUMBER and DESCRIPTION	COL. 3 ENGINEER'S ESTIMATE OF QUANTITY	COL. 4 UNIT	COL. 5 UNIT PRICE (IN FIGURES) DOLLARS	CTS	COL. 6 EXTENDED AMOUNT (IN FIGURES) DOLLARS	CTS
0545	JB 117B.5(CE) UTILITIES CROSSING SHEET PILES FOR FLOOD WALL/GATE (TYPE .5) Unit price bid shall not be less than: $ 9,350.00	1.00	EACH	40,000	0	$ 40,000	0
0546	JB 117C.1(CE) UTILITIES CROSSING STEEL PIPE PILES FOR FLOOD WALL/GATE (TYPE .1) Unit price bid shall not be less than: $ 5,191.00	13.00	EACH	40,000	0	$ 520,000	0
0547	JB 117C.2(CE) UTILITIES CROSSING STEEL PIPE PILES FOR FLOOD WALL/GATE (TYPE .2) Unit price bid shall not be less than: $ 6,171.00	8.00	EACH	40,000	0	$ 320,000	0
0548	JB 117C.3(CE) UTILITIES CROSSING STEEL PIPE PILES FOR FLOOD WALL/GATE (TYPE .3) Unit price bid shall not be less than: $ 7,161.00	1.00	EACH	40,000	0	$ 40,000	0
0549	JB 117C.4(CE) UTILITIES CROSSING STEEL PIPE PILES FOR FLOOD WALL/GATE (TYPE .4) Unit price bid shall not be less than: $ 9,360.00	1.00	EACH	40,000	0	$ 40,000	0

BID SCHEDULE FORM

COL. 1 SEQ. NO	COL. 2 ITEM NUMBER and DESCRIPTION	COL. 3 ENGINEER'S ESTIMATE OF QUANTITY	COL. 4 UNIT	COL. 5 UNIT PRICE (IN FIGURES) DOLLARS	CTS	COL. 6 EXTENDED AMOUNT (IN FIGURES) DOLLARS	CTS
0550	JB 118B.1(CE) UTILITIES CROSSING THROUGH FLOOD WALL/GATES ON SHEET PILES (TYPE.1) Unit price bid shall not be less than: $ 6,202.00	1.00	EACH	40,000	0	$ 40,000	0
0551	JB 118B.2(CE) UTILITIES CROSSING THROUGH FLOOD WALL/GATES ON SHEET PILES (TYPE.2) Unit price bid shall not be less than: $ 7,493.00	1.00	EACH	40,000	0	$ 40,000	0
0552	JB 118B.3(CE) UTILITIES CROSSING THROUGH FLOOD WALL/GATES ON SHEET PILES (TYPE.3) Unit price bid shall not be less than: $ 9,125.00	1.00	EACH	40,000	0	$ 40,000	0
0553	JB 118B.4(CE) UTILITIES CROSSING THROUGH FLOOD WALL/GATE ON SHEET PILES (TYPE .4) Unit price bid shall not be less than: $ 10,325.00	1.00	EACH	40,000	0	$ 40,000	0
0554	JB 118B.5(CE) UTILITIES CROSSING THROUGH FLOOD WALL/GATE ON SHEET PILES (TYPE .5) Unit price bid shall not be less than: $ 11,575.00	1.00	EACH	40,000	0	$ 40,000	0

BID SCHEDULE FORM

COL. 1 SEQ. NO	COL. 2 ITEM NUMBER and DESCRIPTION	COL. 3 ENGINEER'S ESTIMATE OF QUANTITY	COL. 4 UNIT	COL. 5 UNIT PRICE (IN FIGURES) DOLLARS	CTS	COL. 6 EXTENDED AMOUNT (IN FIGURES) DOLLARS	CTS
0555	JB 118C.1(CE) UTILITIES CROSSING THROUGH FLOOD WALL/GATE ON STEEL PIPE PILES (TYPE .1) Unit price bid shall not be less than: $ 6,652.00	1.00	EACH	40,000	0	$ 40,000	0
0556	JB 118C.2(CE) UTILITIES CROSSING THROUGH FLOOD WALL/GATE ON STEEL PIPE PILES (TYPE .2) Unit price bid shall not be less than: $ 7,632.00	3.00	EACH	40,000	0	$ 120,000	0
0557	JB 118C.3(CE) UTILITIES CROSSING THROUGH FLOOD WALL/GATE ON STEEL PIPE PILES (TYPE .3) Unit price bid shall not be less than: $ 9,225.00	1.00	EACH	40,000	0	$ 40,000	0
0558	JB 118C.4(CE) UTILITIES CROSSING THROUGH FLOOD WALL/GATE ON STEEL PIPE PILES (TYPE .4) Unit price bid shall not be less than: $ 10,818.00	1.00	EACH	40,000	0	$ 40,000	0
0559	JB 122(CE) INCREMENTAL COST FOR MGP CONTAMINENT HANDLING & DISPOSAL Unit price bid shall not be less than: $ 150.00	1,090.00	C.Y.	150	0	$ 163,500	0

BID SCHEDULE FORM

COL. 1 SEQ. NO	COL. 2 ITEM NUMBER and DESCRIPTION	COL. 3 ENGINEER'S ESTIMATE OF QUANTITY	COL. 4 UNIT	COL. 5 UNIT PRICE (IN FIGURES) DOLLARS	CTS	COL. 6 EXTENDED AMOUNT (IN FIGURES) DOLLARS	CTS
0560	JB 123(CE) INSTALLATION OF A COMPOSITE CARBON FIBER SYSTEM ENCAPSULATION OF UNDERGROUND TRANSMISSION FEEDERS AND RETURN LINES Unit price bid shall not be less than: $ 24,000.00	2,000.00	L.F.	24,000	0	$ 48,000,000	0
0561	JB 200(CE) EXTRA DEPTH EXCAVATION OF CATCH BASIN CHUTE CONNECTION PIPES Unit price bid shall not be less than: $ 119.25	110.00	L.F.	150	0	$ 16,500	0
0562	JB 225(CE) INSTALLATION AND REMOVAL OF CATCH BASINS WITH UTILITY INTERFERENCES Unit price bid shall not be less than: $ 5,100.00	4.00	EACH	7,100	0	$ 28,400	0
0563	JB 226(CE) INSTALLATION OF CATCH BASINS WITH UTILITY INTERFERENCES Unit price bid shall not be less than: $ 3,693.00	3.00	EACH	4,700	0	$ 14,100	0
0564	JB 300(CE) SPECIAL CARE EXCAVATION AND BACKFILLING Unit price bid shall not be less than: $ 231.00	670.00	C.Y.	280	0	$ 187,600	0

BID SCHEDULE FORM

COL. 1 SEQ. NO	COL. 2 ITEM NUMBER and DESCRIPTION	COL. 3 ENGINEER'S ESTIMATE OF QUANTITY	COL. 4 UNIT	COL. 5 UNIT PRICE (IN FIGURES) DOLLARS	CTS	COL. 6 EXTENDED AMOUNT (IN FIGURES) DOLLARS	CTS
0565	JB 301(CE) SPECIAL CARE EXCAVATION AND BACKFILLING FOR OIL-O-STATIC PIPE Unit price bid shall not be less than: $ 285.00	3,273.00	C.Y.	470	0	$ 1,538,310	0
0566	JB 302(CE) FIELD COATING OF OIL-O-STATIC FEEDER PIPES Unit price bid shall not be less than: $ 35.00	7,373.00	L.F.	56	0	$ 412,888	0
0567	JB 303(CE) FURNISH, DELIVER AND INSTALL TYPE 3/8 CLEAN SAND BACKFILL Unit price bid shall not be less than: $ 38.25	7,833.00	C.Y.	240	0	$ 1,879,920	0
0568	JB 330E.1(CE) SUPPORT AND PROTECTION OF ELECTRIC AND GAS FACILITIES DURING EXCAVATION OF CITY TRENCH WHEN FACILITIES LIE WITHIN TRENCH LIMITS (TYPE .1) Unit price bid shall not be less than: $ 24.75	950.00	L.F.	68	0	$ 64,600	0
0569	JB 330E.2(CE) SUPPORT AND PROTECTION OF ELECTRIC AND GAS FACILITIES DURING EXCAVATION OF CITY TRENCH WHEN FACILITIES LIE WITHIN TRENCH LIMITS (TYPE .2) Unit price bid shall not be less than: $ 30.00	3,535.00	L.F.	82	0	$ 289,870	0

BID SCHEDULE FORM

COL. 1 SEQ. NO	COL. 2 ITEM NUMBER and DESCRIPTION	COL. 3 ENGINEER'S ESTIMATE OF QUANTITY	COL. 4 UNIT	COL. 5 UNIT PRICE (IN FIGURES) DOLLARS	CTS	COL. 6 EXTENDED AMOUNT (IN FIGURES) DOLLARS	CTS
0570	JB 330E.3(CE) SUPPORT AND PROTECTION OF ELECTRIC AND GAS FACILITIES DURING EXCAVATION OF CITY TRENCH WHEN FACILITIES LIE WITHIN TRENCH LIMITS (TYPE .3) Unit price bid shall not be less than: $ 34.50	1,500.00	L.F.	125	0	$ 187,500	0
0571	JB 330E.4(CE) SUPPORT AND PROTECTION OF ELECTRIC AND GAS FACILITIES DURING EXCAVATION OF CITY TRENCH WHEN FACILITIES LIE WITHIN TRENCH LIMITS (TYPE .4) Unit price bid shall not be less than: $ 48.00	125.00	L.F.	187	0	$ 23,375	0
0572	JB 400(CE) TEST PITS FOR UTILITY FACILITIES Unit price bid shall not be less than: $ 198.00	330.00	C.Y.	270	0	$ 89,100	0
0573	JB 400(ECS) TEST PITS FOR UTILITY FACILITIES Unit price bid shall not be less than: $ 218.00	10.00	C.Y.	300	0	$ 3,000	0
0574	JB 400A(CE) SURVEYED AND DRAFTED TEST PITS FOR UTILITY FACILITIES Unit price bid shall not be less than: $ 240.00	420.00	C.Y.	410	0	$ 172,200	0

BID SCHEDULE FORM

COL. 1 SEQ. NO	COL. 2 ITEM NUMBER and DESCRIPTION	COL. 3 ENGINEER'S ESTIMATE OF QUANTITY	COL. 4 UNIT	COL. 5 UNIT PRICE (IN FIGURES)		COL. 6 EXTENDED AMOUNT (IN FIGURES)	
				DOLLARS	CTS	DOLLARS	CTS
0575	JB 401(CABV) TRENCH EXCAVATION FOR ADJUSTMENT OF UTILITY FACILITIES Unit price bid shall not be less than: $ 180.00	156.10	C.Y.	290	0	$ 45,269	0
0576	JB 401(CE) TRENCH EXCAVATION FOR ADJUSTMENT OF UTILITY FACILITIES Unit price bid shall not be less than: $ 238.00	9,447.00	C.Y.	320	0	$ 3,023,040	0
0577	JB 401(ECS) TRENCH EXCAVATION FOR ADJUSTMENT OF UTILITY FACILITIES Unit price bid shall not be less than: $ 228.00	67.00	C.Y.	230	0	$ 15,410	0
0578	JB 402.1(CE) EXISTING CONCRETE ENCASED CONDUITS PLACED IN FINAL POSITION WITHOUT CONCRETE ENCASEMENT Unit price bid shall not be less than: $ 70.50	800.00	L.F.	90	0	$ 72,000	0
0579	JB 402.1A(CE) EXISTING CONCRETE ENCASED CONDUITS PLACED IN FINAL POSITION WITH CONCRETE ENCASEMENT Unit price bid shall not be less than: $ 75.00	1,600.00	L.F.	92	0	$ 147,200	0
0580	JB 402.2(CE) EXISTING NON-CONCRETE ENCASED CONDUITS PLACED IN FINAL POSITION WITHOUT CONCRETE ENCASEMENT Unit price bid shall not be less than: $ 44.25	1,880.00	L.F.	52	0	$ 97,760	0

BID SCHEDULE FORM

COL. 1 SEQ. NO	COL. 2 ITEM NUMBER and DESCRIPTION	COL. 3 ENGINEER'S ESTIMATE OF QUANTITY	COL. 4 UNIT	COL. 5 UNIT PRICE (IN FIGURES) DOLLARS	CTS	COL. 6 EXTENDED AMOUNT (IN FIGURES) DOLLARS	CTS
0581	JB 402.2A(CE) EXISTING NON-CONCRETE ENCASED CONDUITS PLACED IN FINAL POSITION WITH CONCRETE ENCASEMENT **Unit price bid shall not be less than: $ 48.75**	9,194.00	L.F.	60	0	$ 551,640	0
0582	JB 402B.1A(CE) EXISTING TRANSMISSION FACILITY UP TO 6" DIAM, ADJUSTED 0" UP TO AND INCLUDING 6" IN ANY DIRECTION, TO FINAL POSITION **Unit price bid shall not be less than: $ 60.00**	9,115.00	L.F.	73	0	$ 665,395	0
0583	JB 402B.1B(CE) EXISTING TRANSMISSION FACILITY 6" TO 12" DIAM, ADJUSTED 0" UP TO AND INCLUDING 6" IN ANY DIRECTION, TO FINAL POSITION **Unit price bid shall not be less than: $ 65.00**	8,518.00	L.F.	80	0	$ 681,440	0
0584	JB 402B.2A(CE) EXISTING TRANSMISSION FACILITY UP TO 6" DIAM, ADJUSTED GREATER THAN 6" UP TO AND INCLUDING 9" IN ANY DIRECTION, TO FINAL POSITION **Unit price bid shall not be less than: $ 70.00**	8,661.00	L.F.	85	0	$ 736,185	0
0585	JB 402B.2B(CE) EXISTING TRANSMISSION FACILITY 6" TO 12" DIAM, ADJUSTED GREATER THAN 6" UP TO AND INCLUDING 9" IN ANY DIRECTION, TO FINAL POSITION **Unit price bid shall not be less than: $ 75.00**	13,733.00	L.F.	91	0	$ 1,249,703	0

BID SCHEDULE FORM

COL. 1 SEQ. NO	COL. 2 ITEM NUMBER and DESCRIPTION	COL. 3 ENGINEER'S ESTIMATE OF QUANTITY	COL. 4 UNIT	COL. 5 UNIT PRICE (IN FIGURES)		COL. 6 EXTENDED AMOUNT (IN FIGURES)	
				DOLLARS	CTS	DOLLARS	CTS
0586	JB 402B.3A(CE) EXISTING TRANSMISSION FACILITY UP TO 6" DIAM, ADJUSTED GREATERTHAN 9" UP TO AND INCLUDING 12" IN ANY DIRECTION, TO FINAL POSITION **Unit price bid shall not be less than: $ 80.00**	5,031.00	L.F.	96	0	$ 482,976	0
0587	JB 402B.3B(CE) EXISTING TRANSMISSION FACILITY 6" TO 12" DIAM, ADJUSTED GREATER THAN 9" UP TO AND INCLUDING 12" IN ANY DIRECTION, TO FINAL POSITION **Unit price bid shall not be less than: $ 85.00**	8,717.00	L.F.	103	0	$ 897,851	0
0588	JB 402T.1A (CABV) EXISTING CONCRETE ENCASED TELECOMMUNICATION CONDUITS PLACED IN FINAL POSITION WITH CONCRETE ENCASEMENT **Unit price bid shall not be less than: $ 28.00**	220.00	L.F.	47	0	$ 10,340	0
0589	JB 402T.1A(ECS) EXISTING CONCRETE ENCASED TELECOMMUNICATION CONDUITS PLACED IN FINAL POSITION WITH CONCRETE ENCASEMENT **Unit price bid shall not be less than: $ 57.63**	80.00	L.F.	64	0	$ 5,120	0
0590	JB 402T.2A(ECS) EXISTING NON-CONCRETE ENCASED TELECOMMUNICATION CONDUITS PLACED IN FINAL POSITION WITH CONCRETE ENCASEMENT **Unit price bid shall not be less than: $ 46.00**	40.00	L.F.	74	0	$ 2,960	0

BID SCHEDULE FORM

COL. 1 SEQ. NO	COL. 2 ITEM NUMBER and DESCRIPTION	COL. 3 ENGINEER'S ESTIMATE OF QUANTITY	COL. 4 UNIT	COL. 5 UNIT PRICE (IN FIGURES) DOLLARS	CTS	COL. 6 EXTENDED AMOUNT (IN FIGURES) DOLLARS	CTS
0591	JB 402T.R2A(ECS) EXISTING NON - CONCRETE ENCASED STEEL/IRON CONDUITS PLACED IN FINAL POSITION WITH CONCRETE ENCASEMENT **Unit price bid shall not be less than: $ 37.54**	40.00	L.F.	120	0	$ 4,800	0
0592	JB 402T.V1A(ECS) EXISTING VACANT CONCRETE ENCASED TELECOMMUNICATION CONDUITS PLACED IN FINAL POSITION WITH CONCRETE ENCASEMENT **Unit price bid shall not be less than: $ 53.00**	40.00	L.F.	105	0	$ 4,200	0
0593	JB 402T.V2A (ECS) EXISTING VACANT NON-CONCRETE ENCASED CONDUITS PLACED IN FINAL POSITION WITH CONCRETE ENCASEMENT **Unit price bid shall not be less than: $ 44.00**	40.00	L.F.	103	0	$ 4,120	0
0594	JB 403(CE) PLACING STEEL PROTECTION PLATES FOR UTILITY FACILITIES **Unit price bid shall not be less than: $ 2.25**	4,000.00	S.F.	2	60	$ 10,400	0
0595	JB 404(CE) PIER & PLATE METHOD OF PROTECTION FOR DUCTILE IRON WATER MAINS AND OTHER SHALLOW FACILITIES **Unit price bid shall not be less than: $ 339.00**	100.00	S.F.	420	0	$ 42,000	0

BID SCHEDULE FORM

COL. 1 SEQ. NO	COL. 2 ITEM NUMBER and DESCRIPTION	COL. 3 ENGINEER'S ESTIMATE OF QUANTITY	COL. 4 UNIT	COL. 5 UNIT PRICE (IN FIGURES) DOLLARS	CTS	COL. 6 EXTENDED AMOUNT (IN FIGURES) DOLLARS	CTS
0596	JB 404A(CE) PERMANENT SUPPORT REQUIREMENTS OF CRITICAL UTILITY FACILITIES IN AREAS OF SIGNIFICANT SETTLEMENT PRICE BID SHALL BE FOR THE FIXED SUM OF $ 500,000.00	1.00	F.S.	500,000	0	$ 500,000	0
0597	JB 405.1(CE) TRENCH EXCAVATION FOR INSTALLATION OF UTILITY FACILITIES WITH TOTAL DEPTHS LESS THAN FIVE FEET Unit price bid shall not be less than: $ 203.00	1,396.00	C.Y.	260	0	$ 362,960	0
0598	JB 405.2(CE) TRENCH EXCAVATION FOR INSTALLATION OF UTILITY FACILITIES WITH TOTAL DEPTHS EQUAL TO OR GREATER THAN FIVE FEET, REQUIRING SHEETING Unit price bid shall not be less than: $ 294.00	1,050.00	C.Y.	380	0	$ 399,000	0
0599	JB 405A(CE) TRENCH EXCAVATION FOR CARBON FIBER WRAPPING EXISTING UTILITY FACILITIES Unit price bid shall not be less than: $ 250.00	9,334.00	C.Y.	460	0	$ 4,293,640	0
0600	JB 406(CE) EXCAVATION FOR UTILITY STRUCTURE Unit price bid shall not be less than: $ 230.00	906.00	C.Y.	315	0	$ 285,390	0

BID SCHEDULE FORM

COL. 1 SEQ. NO	COL. 2 ITEM NUMBER and DESCRIPTION	COL. 3 ENGINEER'S ESTIMATE OF QUANTITY	COL. 4 UNIT	COL. 5 UNIT PRICE (IN FIGURES) DOLLARS	CTS	COL. 6 EXTENDED AMOUNT (IN FIGURES) DOLLARS	CTS
0601	JB 410.1(CE) MASS TRENCH EXCAVATION FOR UTILITY FACILITIES UP TO AND INCLUDING 20% (TYPE .1) Unit price bid shall not be less than: $ 280.00	940.00	C.Y.	345	0	$ 324,300	0
0602	JB 410.2(CE) MASS TRENCH EXCAVATION FOR UTILITY FACILITIES OVER 20% AND UP TO AND INCLUDING 40% (TYPE .2) Unit price bid shall not be less than: $ 254.00	1,720.00	C.Y.	345	0	$ 593,400	0
0603	JB 450.1(CE) CONSTRUCTION FIELD SUPPORT - SURVEY CREW (TYPE .1) Unit price bid shall not be less than: $ 274.00	428.00	CREW/HR	300	0	$ 128,400	0
0604	JB 450.2(CE) CONSTRUCTION FIELD SUPPORT - SMALL SIZE CREW (TYPE .2) Unit price bid shall not be less than: $ 270.00	2,410.00	CREW/HR	300	0	$ 723,000	0
0605	JB 450.3(CE) CONSTRUCTION FIELD SUPPORT - MEDIUM SIZE CREW (TYPE .3) Unit price bid shall not be less than: $ 770.00	3,710.00	CREW/HR	800	0	$ 2,968,000	0
0606	JB 450.5 (ECS) CONSTRUCTION FIELD SUPPORT - PIPE RIPPING (TYPE 5) Unit price bid shall not be less than: $ 607.76	16.00	CREW/HR	650	0	$ 10,400	0

BID SCHEDULE FORM

COL. 1 SEQ. NO	COL. 2 ITEM NUMBER and DESCRIPTION	COL. 3 ENGINEER'S ESTIMATE OF QUANTITY	COL. 4 UNIT	COL. 5 UNIT PRICE (IN FIGURES) DOLLARS	CTS	COL. 6 EXTENDED AMOUNT (IN FIGURES) DOLLARS	CTS
0607	JB 500(CE) REMOVAL OF ABANDONED UTILITY CONDUITS (NON-CONCRETE ENCASED) Unit price bid shall not be less than: $ 3.00	10,458.00	L.F.	4	50	$ 47,061	0
0608	JB 500(ECS) REMOVAL OF ABANDONED UTILITY CONDUITS (NON-CONCRETE ENCASED) Unit price bid shall not be less than: $ 4.00	50.00	L.F.	18	0	$ 900	0
0609	JB 501(CE) REMOVAL OF ABANDONED MASONRY FOR UTILITY FACILITIES Unit price bid shall not be less than: $ 297.00	85.00	C.Y.	420	0	$ 35,700	0
0610	JB 501(ECS) REMOVAL OF ABANDONED MASONRY FOR UTILITY FACILITIES Unit price bid shall not be less than: $ 231.00	5.00	C.Y.	430	0	$ 2,150	0
0611	JB 603E.1(CE) INSTALL UTILITY CONDUITS PLACED IN FINAL POSITION WITHOUT CONCRETE ENCASEMENT Unit price bid shall not be less than: $ 4.50	5,100.00	L.F.	11	0	$ 56,100	0
0612	JB 603E.2(CE) INSTALL UTILITY CONDUITS PLACED IN FINAL POSITION WITH CONCRETE ENCASEMENT Unit price bid shall not be less than: $ 7.50	8,300.00	L.F.	13	0	$ 107,900	0

BID SCHEDULE FORM

COL. 1 SEQ. NO	COL. 2 ITEM NUMBER and DESCRIPTION	COL. 3 ENGINEER'S ESTIMATE OF QUANTITY	COL. 4 UNIT	COL. 5 UNIT PRICE (IN FIGURES) DOLLARS	CTS	COL. 6 EXTENDED AMOUNT (IN FIGURES) DOLLARS	CTS
0613	JB 610.12(CE) 12" DIAMETER STEEL GAS PIPE Unit price bid shall not be less than: $ 66.00	407.00	L.F.	320	0	$ 130,240	0
0614	JB 610.24(CE) 24" DIAMETER STEEL GAS PIPE Unit price bid shall not be less than: $ 118.50	176.00	L.F.	1,020	0	$ 179,520	0
0615	JB 610.3(CE) 3" DIAMETER STEEL GAS PIPE Unit price bid shall not be less than: $ 11.25	528.00	L.F.	215	0	$ 113,520	0
0616	JB 610.8(CE) 8" DIAMETER STEEL GAS PIPE Unit price bid shall not be less than: $ 35.25	743.00	L.F.	270	0	$ 200,610	0
0617	JB 611.12(CE) 12" DIAMETER STEEL GAS PIPE FITTING Unit price bid shall not be less than: $ 1,234.50	8.00	EACH	7,000	0	$ 56,000	0
0618	JB 611.24(CE) 24" DIAMETER STEEL GAS PIPE FITTING Unit price bid shall not be less than: $ 2,667.00	7.00	EACH	18,900	0	$ 132,300	0

BID SCHEDULE FORM

COL. 1 SEQ. NO	COL. 2 ITEM NUMBER and DESCRIPTION	COL. 3 ENGINEER'S ESTIMATE OF QUANTITY	COL. 4 UNIT	COL. 5 UNIT PRICE (IN FIGURES)		COL. 6 EXTENDED AMOUNT (IN FIGURES)	
				DOLLARS	CTS	DOLLARS	CTS
0619	JB 611.3(CE) 3" DIAMETER STEEL GAS PIPE FITTING Unit price bid shall not be less than: $ 309.75	23.00	EACH	1,620	0	$ 37,260	0
0620	JB 611.8(CE) 8" DIAMETER STEEL GAS PIPE FITTING Unit price bid shall not be less than: $ 825.75	21.00	EACH	4,500	0	$ 94,500	0
0621	JB 615.12(CE) INSTALLATION OF PLASTIC GAS PIPE - 12" DIAMETER Unit price bid shall not be less than: $ 36.00	187.00	L.F.	390	0	$ 72,930	0
0622	JB 615.3(CE) INSTALLATION OF PLASTIC GAS PIPE - 3" DIAMETER Unit price bid shall not be less than: $ 12.00	116.00	L.F.	130	0	$ 15,080	0
0623	JB 615.8(CE) INSTALLATION OF PLASTIC GAS PIPE - 8" DIAMETER Unit price bid shall not be less than: $ 23.00	286.00	L.F.	200	0	$ 57,200	0
0624	JB 616.12(CE) INSTALLATION OF PLASTIC GAS PIPE FITTING - 12" DIAMETER Unit price bid shall not be less than: $ 638.00	12.00	EACH	650	0	$ 7,800	0

BID SCHEDULE FORM

COL. 1 SEQ. NO	COL. 2 ITEM NUMBER and DESCRIPTION	COL. 3 ENGINEER'S ESTIMATE OF QUANTITY	COL. 4 UNIT	COL. 5 UNIT PRICE (IN FIGURES) DOLLARS	CTS	COL. 6 EXTENDED AMOUNT (IN FIGURES) DOLLARS	CTS
0625	JB 616.3(CE) INSTALLATION OF PLASTIC GAS PIPE FITTING - 3" DIAMETER Unit price bid shall not be less than: $ 132.00	7.00	EACH	230	0	$ 1,610	0
0626	JB 616.8(CE) INSTALLATION OF PLASTIC GAS PIPE FITTING - 8" DIAMETER Unit price bid shall not be less than: $ 328.00	6.00	EACH	390	0	$ 2,340	0
0627	JB 620.12(CE) INSTALL 24" DIAMETER STEAM PIPE Unit price bid shall not be less than: $ 346.50	418.00	L.F.	1,950	0	$ 815,100	0
0628	JB 621.12(CE) INSTALL 24" DIAMETER STEAM PIPE FITTING Unit price bid shall not be less than: $ 3,360.00	20.00	EACH	23,000	0	$ 460,000	0
0629	JB 622.36(CE) FURNISHING, DELIVERING AND INSTALLING 36-INCH STRAIGHT STEEL STEAM CASING PIPE Unit price bid shall not be less than: $ 386.00	80.00	L.F.	2,800	0	$ 224,000	0
0630	JB 622.48(CE) FURNISHING, DELIVERING AND INSTALLING 48-INCH STRAIGHT STEEL STEAM CASING PIPE Unit price bid shall not be less than: $ 426.00	80.00	L.F.	3,900	0	$ 312,000	0

BID SCHEDULE FORM

COL. 1 SEQ. NO	COL. 2 ITEM NUMBER and DESCRIPTION	COL. 3 ENGINEER'S ESTIMATE OF QUANTITY	COL. 4 UNIT	COL. 5 UNIT PRICE (IN FIGURES)		COL. 6 EXTENDED AMOUNT (IN FIGURES)	
				DOLLARS	CTS	DOLLARS	CTS
0631	JB 625D(CE) STEAM VALVE ASSEMBLY Unit price bid shall not be less than: $ 2,625.00	1.00	EACH	14,900	0	$ 14,900	0
0632	JB 625E(CE) INSTALLATION OF STEAM ANCHOR Unit price bid shall not be less than: $ 4,000.00	4.00	EACH	35,000	0	$ 140,000	0
0633	JB 625F(CE) INSTALLATION OF STEAM MANHOLE Unit price bid shall not be less than: $ 40,000.00	1.00	EACH	196,000	0	$ 196,000	0
0634	JB 636 EA(CE) ADJUSTMENT OF UTILITY HARDWARE (UNDER 7" WIDTH) Unit price bid shall not be less than: $ 265.50	10.00	EACH	410	0	$ 4,100	0
0635	JB 636 EB(CE) ADJUSTMENT OF UTILITY HARDWARE (7" TO UNDER 14" WIDTH) Unit price bid shall not be less than: $ 302.00	8.00	EACH	410	0	$ 3,280	0
0636	JB 636 EC(CE) ADJUSTMENT OF UTILITY HARDWARE (14" TO UNDER 30" WIDTH) Unit price bid shall not be less than: $ 769.00	6.00	EACH	880	0	$ 5,280	0

BID SCHEDULE FORM

COL. 1 SEQ. NO	COL. 2 ITEM NUMBER and DESCRIPTION	COL. 3 ENGINEER'S ESTIMATE OF QUANTITY	COL. 4 UNIT	COL. 5 UNIT PRICE (IN FIGURES) DOLLARS	CTS	COL. 6 EXTENDED AMOUNT (IN FIGURES) DOLLARS	CTS
0637	JB 636 ED(CE) ADJUSTMENT OF UTILITY HARDWARE (30" TO UNDER 34" WIDTH) Unit price bid shall not be less than: $ 774.00	27.00	EACH	890	0	$ 24,030	0
0638	JB 636 EE (CABV) ADJUSTMENT OF UTILITY HARDWARE (34" TO UNDER 41" WIDTH) Unit price bid shall not be less than: $ 490.00	2.00	EACH	880	0	$ 1,760	0
0639	JB 636 EE RD(ECS) ADJUSTMENT OF UTILITY HARDWARE (34" TO UNDER 41" WIDTH) Unit price bid shall not be less than: $ 490.00	2.00	EACH	880	0	$ 1,760	0
0640	JB 636 EE(CE) ADJUSTMENT OF UTILITY HARDWARE (34" TO UNDER 41" WIDTH) Unit price bid shall not be less than: $ 893.00	10.00	EACH	950	0	$ 9,500	0
0641	JB 636 EG(CE) ADJUSTMENT OF UTILITY HARDWARE (41" TO UNDER 75" WIDTH) Unit price bid shall not be less than: $ 1,021.00	10.00	EACH	1,200	0	$ 12,000	0
0642	JB 636 EH(CE) ADJUSTMENT OF UTILITY HARDWARE (75" TO UNDER 125" WIDTH) Unit price bid shall not be less than: $ 1,165.00	9.00	EACH	1,500	0	$ 13,500	0

BID SCHEDULE FORM

COL. 1 SEQ. NO	COL. 2 ITEM NUMBER and DESCRIPTION	COL. 3 ENGINEER'S ESTIMATE OF QUANTITY	COL. 4 UNIT	COL. 5 UNIT PRICE (IN FIGURES)		COL. 6 EXTENDED AMOUNT (IN FIGURES)	
				DOLLARS	CTS	DOLLARS	CTS
0643	JB 636 EI(CE) ADJUSTMENT OF UTILITY HARDWARE (125" TO UNDER 170" WIDTH) **Unit price bid shall not be less than: $ 1,285.00**	9.00	EACH	1,500	0	$ 13,500	0
0644	JB 636 MD(CE) MODIFICATION OF WORK METHODS TO ACCOMMODATE UTILITY HARDWARE (30" TO UNDER 34" WIDTH) **Unit price bid shall not be less than: $ 84.75**	10.00	EACH	225	0	$ 2,250	0
0645	JB 636 ME(CE) MODIFICATION OF WORK METHODS TO ACCOMMODATE UTILITY HARDWARE (34" TO UNDER 41" WIDTH) **Unit price bid shall not be less than: $ 90.00**	10.00	EACH	225	0	$ 2,250	0
0646	JB 636 MG(CE) MODIFICATION OF WORK METHODS TO ACCOMMODATE UTILITY HARDWARE (41" TO UNDER 75" WIDTH) **Unit price bid shall not be less than: $ 96.75**	10.00	EACH	225	0	$ 2,250	0
0647	JB 636 R(CE) REPAIR TO UTILITY STRUCTURES **Unit price bid shall not be less than: $ 208.00**	180.00	C.Y.	475	0	$ 85,500	0
0648	JB 636 SA(CE) CONCRETE COLLAR AROUND STEAM CASTINGS **Unit price bid shall not be less than: $ 12.75**	500.00	S.F.	40	0	$ 20,000	0

BID SCHEDULE FORM

COL. 1 SEQ. NO	COL. 2 ITEM NUMBER and DESCRIPTION	COL. 3 ENGINEER'S ESTIMATE OF QUANTITY	COL. 4 UNIT	COL. 5 UNIT PRICE (IN FIGURES) DOLLARS	CTS	COL. 6 EXTENDED AMOUNT (IN FIGURES) DOLLARS	CTS
0649	JB 638 N(CE) INSTALLATION OF FIELD CONSTRUCTED UTILITY STRUCTURE **Unit price bid shall not be less than: $ 978.00**	305.00	C.Y.	1,020	0	$ 311,100	0
0650	JB 638 R(CE) BREAK OUT AND REMOVE UTILITY STRUCTURE **Unit price bid shall not be less than: $ 780.00**	670.00	C.Y.	1,000	0	$ 670,000	0
0651	JB 700(CE) SPECIAL MODIFICATION OF WORK METHODS TO ACCOMMODATE/PROTECT UNDERGROUND FACILITIES WITH LIMITED COVER **Unit price bid shall not be less than: $ 46.50**	180.00	C.Y.	230	0	$ 41,400	0
0652	JB 700(ECS) SPECIAL MODIFICATION OF WORK METHODS TO ACCOMMODATE/PROTECT UNDERGROUND FACILITIES WITH LIMITED COVER **Unit price bid shall not be less than: $ 95.00**	30.00	C.Y.	230	0	$ 6,900	0
0653	JB 710.1(CE) REMOVAL OF ABANDONED UTILITY STEEL/CAST IRON/ PLASTIC PIPES, UP TO AND INCLUDING 12" DIAMETER PIPE **Unit price bid shall not be less than: $ 12.75**	1,675.00	L.F.	19	0	$ 31,825	0

BID SCHEDULE FORM

COL. 1 SEQ. NO	COL. 2 ITEM NUMBER and DESCRIPTION	COL. 3 ENGINEER'S ESTIMATE OF QUANTITY	COL. 4 UNIT	COL. 5 UNIT PRICE (IN FIGURES) DOLLARS	CTS	COL. 6 EXTENDED AMOUNT (IN FIGURES) DOLLARS	CTS
0654	JB 710.3 (CE) REMOVAL OF ABANDONED UILITY STEEL/CAST IRON PIPE, STRUCTURE OPENINGS Unit price bid shall not be less than: $ 38.25	200.00	L.F.	58	0	$ 11,600	0
0655	JB 711(CE) USE SHEETING LINE AS FORM Unit price bid shall not be less than: $ 4.50	3,293.00	L.F.	6	0	$ 19,758	0
0656	JB 800(CE) MODIFICATION OF TROLLEY STRUCTURE REMOVAL WHEN CROSSING UTILITY FACILITIES Unit price bid shall not be less than: $ 158.00	150.00	L.F.	200	0	$ 30,000	0
0657	JB 801(CE) MODIFICATION OF TROLLEY STRUCTURE REMOVAL PARALLEL TO UTILITY FACILITIES Unit price bid shall not be less than: $ 147.00	300.00	L.F.	160	0	$ 48,000	0
0658	JB 803.1(CE) LINE CUT BY PNEUMATIC TOOLS IN LIEU OF SAW CUT ASSOCIATED WITH RDWY REMOVAL (LINE CUT ASPHALT ROADWAY) Unit price bid shall not be less than: $ 8.00	300.00	L.F.	10	0	$ 3,000	0

BID SCHEDULE FORM

COL. 1 SEQ. NO	COL. 2 ITEM NUMBER and DESCRIPTION	COL. 3 ENGINEER'S ESTIMATE OF QUANTITY	COL. 4 UNIT	COL. 5 UNIT PRICE (IN FIGURES) DOLLARS	CTS	COL. 6 EXTENDED AMOUNT (IN FIGURES) DOLLARS	CTS
0659	JB 803.2(CE) LINE CUT BY PNEUMATIC TOOLS IN LIEU OF SAW CUT ASSOCIATED WITH ROADWAY REMOVAL OPERATIONS (LINE CUT ANY COMBINATION OF ASPHALT AND CONCRETE ROADWAY) **Unit price bid shall not be less than: $ 9.00**	5,400.00	L.F.	10	0	$ 54,000	0
0660	JB 803.3 (CE) LINE CUT ANY COMBINATION OF ASPHALT, CONCRETE, AND BELGIUM BLOCK **Unit price bid shall not be less than: $ 11.00**	800.00	L.F.	12	0	$ 9,600	0
0661	JB 850(CE) PLACING RUBBER SHEETS FOR UTILITY FACILITIES **Unit price bid shall not be less than: $ 3.00**	2,750.00	S.F.	3	90	$ 10,725	0
0662	JB 900 (CABV) EXTRA UTILITY WORK COSTS ALLOWANCE **PRICE BID SHALL BE FOR THE FIXED SUM OF $ 5,814.72**	1.00	F.S.	5,814	72	$ 5,814	72
0663	JB 900(CE) EXTRA UTILITY WORK COSTS ALLOWANCE **PRICE BID SHALL BE FOR THE FIXED SUM OF $ 16,690,000.00**	1.00	F.S.	16,690,000	0	$ 16,690,000	0

BID SCHEDULE FORM

COL. 1 SEQ. NO	COL. 2 ITEM NUMBER and DESCRIPTION	COL. 3 ENGINEER'S ESTIMATE OF QUANTITY	COL. 4 UNIT	COL. 5 UNIT PRICE (IN FIGURES) DOLLARS	CTS	COL. 6 EXTENDED AMOUNT (IN FIGURES) DOLLARS	CTS
0664	JB 900(ECS) EXTRA UTILITY WORK COSTS ALLOWANCE PRICE BID SHALL BE FOR THE FIXED SUM OF $ 20,000.00	1.00	F.S.	20,000	0	$ 20,000	0
0665	NYC-180002 METAL ARCHITECTURAL MESH	1.00	L.S.	2,000,000	0	$ 2,000,000	0
0666	PK-10 BROKEN STONE, LOOSE MEASURE	2,059.00	C.Y.	140	0	$ 288,260	0
0667	PK-197 FOUNDATION MATERIAL FOR CONCRETE (TRUCK MEASURED)	246.00	C.Y.	170	0	$ 41,820	0
0668	PK-227B ADA GRANITE BLOCK ON SAND- ACCESSIBLE	2,257.00	S.F.	80	0	$ 180,560	0
0669	PK-305 CHAIN LINK FENCE 8'-0" HT.	1,767.00	L.F.	170	0	$ 300,390	0
0670	PK-308 CHAIN LINK FENCE 12'-0" HT., 2" MESH	1,071.00	L.F.	190	0	$ 203,490	0
0671	PK-316 SINGLE GATE FOR CHAIN LINK FENCE 8' HT. & OVER	17.00	EACH	8,600	0	$ 146,200	0

BID SCHEDULE FORM

COL. 1 SEQ. NO	COL. 2 ITEM NUMBER and DESCRIPTION	COL. 3 ENGINEER'S ESTIMATE OF QUANTITY	COL. 4 UNIT	COL. 5 UNIT PRICE (IN FIGURES) DOLLARS	CTS	COL. 6 EXTENDED AMOUNT (IN FIGURES) DOLLARS	CTS
0672	PK-319 DOUBLE GATE FOR CHAIN LINK FENCE 8' HT.	1.00	EACH	16,000	0	$ 16,000	0
0673	PK-320 DOUBLE GATE FOR CHAIN LINK FENCE 10' HT. & OVER	6.00	EACH	20,000	0	$ 120,000	0
0674	PK-667 TEMPORARY SHEETING	289,500.00	S.F.	1	0	$ 289,500	0
0675	PK-668 PARKS LEAF MANHOLE COVER & FRAME	35.00	EACH	1,700	0	$ 59,500	0
0676	PK-669 PARKS LEAF CATCH BASIN COVER & FRAME	25.00	EACH	1,700	0	$ 42,500	0
0677	PK-685 DUCTILE IRON SEWER PIPE - 12" DIA.	25.00	L.F.	550	0	$ 13,750	0
0678	PK-687 DUCTILE IRON SEWER PIPE - 8" DIA.	789.00	L.F.	750	0	$ 591,750	0
0679	PK-687A DUCTILE IRON SEWER PIPE 4" DIA	75.00	L.F.	675	0	$ 50,625	0

BID SCHEDULE FORM

COL. 1 SEQ. NO	COL. 2 ITEM NUMBER and DESCRIPTION	COL. 3 ENGINEER'S ESTIMATE OF QUANTITY	COL. 4 UNIT	COL. 5 UNIT PRICE (IN FIGURES) DOLLARS	CTS	COL. 6 EXTENDED AMOUNT (IN FIGURES) DOLLARS	CTS
0680	PK-687B DUCTILE IRON SEWER PIPE 6" DIA	135.00	L.F.	650	0	$ 87,750	0
0681	PK-77 POLYETHYLENE CORRUGATED PIPE (18")	8,091.00	L.F.	225	0	$ 1,820,475	0
0682	PK-78 POLYETHYLENE CORRUGATED PIPE (24")	1,475.00	L.F.	550	0	$ 811,250	0
0683	PK-900 HYDRODYNAMIC SEPARATOR	13.00	EACH	32,000	0	$ 416,000	0
0684	PK-ESCR 028 A 5" CONCRETE SIDEWALK WITH SPECIAL SCORING AND EXPOSED AGGREGATE SURFACE TREATMENT (SAW CUT TYPE JOINTS)	154,901.00	S.F.	22	0	$ 3,407,822	0
0685	PK-ESCR 028 B 6" CONCRETE SIDEWALK WITH SPECIAL SCORING AND EXPOSED AGGREGATE SURFACE TREATMENT (SAW CUT TYPE JOINTS)	122,949.00	S.F.	27	0	$ 3,319,623	0
0686	PK-ESCR 031 GALVANIZED ESPLANADE SEA RAIL	6,110.00	L.F.	900	0	$ 5,499,000	0
0687	PK-ESCR 032 STEEL SLAT DOUBLE SWING GATE, 8'-0" HT., 35'-0" W.	2.00	EACH	21,000	0	$ 42,000	0

BID SCHEDULE FORM

COL. 1 SEQ. NO	COL. 2 ITEM NUMBER and DESCRIPTION	COL. 3 ENGINEER'S ESTIMATE OF QUANTITY	COL. 4 UNIT	COL. 5 UNIT PRICE (IN FIGURES) DOLLARS	CTS	COL. 6 EXTENDED AMOUNT (IN FIGURES) DOLLARS	CTS
0688	PK-ESCR 032 A STEEL BLEACHER TYPE 1	8.00	EACH	13,000	0	$ 104,000	0
0689	PK-ESCR 032 B STEEL BLEACHER TYPE 2	8.00	EACH	22,000	0	$ 176,000	0
0690	PK-ESCR 035 B STONE TYPE 2	233.00	TON	2,500	0	$ 582,500	0
0691	PK-ESCR 035 C STONE TYPE 3	2,844.00	TON	1,000	0	$ 2,844,000	0
0692	PK-ESCR 035 D BOULDER TYPE 4	99.00	TON	800	0	$ 79,200	0
0693	PK-ESCR 035 E STONE VENEER TYPE 5A	352.00	S.F.	175	0	$ 61,600	0
0694	PK-ESCR 035 F STONE VENEER TYPE 5B	37.00	S.F.	175	0	$ 6,475	0
0695	PK-ESCR 035 G STONE VENEER TYPE 5C	172.00	S.F.	175	0	$ 30,100	0

BID SCHEDULE FORM

COL. 1 SEQ. NO	COL. 2 ITEM NUMBER and DESCRIPTION	COL. 3 ENGINEER'S ESTIMATE OF QUANTITY	COL. 4 UNIT	COL. 5 UNIT PRICE (IN FIGURES) DOLLARS	CTS	COL. 6 EXTENDED AMOUNT (IN FIGURES) DOLLARS	CTS
0696	PK-ESCR 035 H STONE VENEER TYPE 5D	14.00	S.F.	175	0	$ 2,450	0
0697	PK-ESCR 036 A ESPLANADE PRE-CAST CONCRETE SEATWALL MODULE 1	113.00	EACH	2,000	0	$ 226,000	0
0698	PK-ESCR 036 B ESPLANADE PRE-CAST CONCRETE SEATWALL MODULE 2	385.00	EACH	2,200	0	$ 847,000	0
0699	PK-ESCR 036 C ESPLANADE PRE-CAST CONCRETE SEATWALL MODULE 3	40.00	EACH	2,100	0	$ 84,000	0
0700	PK-ESCR 036 D ESPLANADE PRE-CAST CONCRETE SEATWALL MODULE 4	146.00	EACH	2,000	0	$ 292,000	0
0701	PK-ESCR 036 E ESPLANADE PRE-CAST CONCRETE SEATWALL MODULE 5	96.00	EACH	1,800	0	$ 172,800	0
0702	PK-ESCR 036 F ESPLANADE PRE-CAST CONCRETE SEATWALL MODULE 6	36.00	EACH	1,700	0	$ 61,200	0
0703	PK-ESCR 036 G ESPLANADE PRE-CAST CONCRETE SEATWALL MODULE 9	27.00	EACH	1,800	0	$ 48,600	0

BID SCHEDULE FORM

COL. 1 SEQ. NO	COL. 2 ITEM NUMBER and DESCRIPTION	COL. 3 ENGINEER'S ESTIMATE OF QUANTITY	COL. 4 UNIT	COL. 5 UNIT PRICE (IN FIGURES) DOLLARS	CTS	COL. 6 EXTENDED AMOUNT (IN FIGURES) DOLLARS	CTS
0704	PK-ESCR 036 H ESPLANADE PRE-CAST CONCRETE SEATWALL MODULE 10	42.00	EACH	1,700	0	$ 71,400	0
0705	PK-ESCR 036 I ESPLANADE PRE-CAST CONCRETE SEATWALL MODULE 7	24.00	EACH	1,700	0	$ 40,800	0
0706	PK-ESCR 036 J ESPLANADE PRE-CAST CONCRETE MODULE 8	6.00	EACH	2,800	0	$ 16,800	0
0707	PK-ESCR 039 BENCH, 1939 WF RPL SLATS, 4' LENGTH	36.00	L.F.	500	0	$ 18,000	0
0708	PK-ESCR 044 PNEUMATIC EXCAVATION AROUND TREES	55.00	C.Y.	225	0	$ 12,375	0
0709	PK-ESCR 045 A CIRCULAR TABLES AND CHAIRS TYPE 1	12.00	EACH	3,700	0	$ 44,400	0
0710	PK-ESCR 045 B CIRCULAR TABLE AND CHAIRS TYPE 1, ACCESSIBLE	8.00	EACH	3,700	0	$ 29,600	0
0711	PK-ESCR 045 C CIRCULAR TABLES AND CHAIRS TYPE 1, WITH UMBRELLA HOLE	18.00	EACH	11,000	0	$ 198,000	0

BID SCHEDULE FORM

COL. 1 SEQ. NO	COL. 2 ITEM NUMBER and DESCRIPTION	COL. 3 ENGINEER'S ESTIMATE OF QUANTITY	COL. 4 UNIT	COL. 5 UNIT PRICE (IN FIGURES) DOLLARS	CTS	COL. 6 EXTENDED AMOUNT (IN FIGURES) DOLLARS	CTS
0712	PK-ESCR 045 D CIRCULAR TABLES AND CHAIRS TYPE 1, ACCESSIBLE, WITH UMBRELLA HOLE	11.00	EACH	9,000	0	$ 99,000	0
0713	PK-ESCR 046 A STEEL UMBRELLA SURFACE MOUNT	78.00	EACH	5,300	0	$ 413,400	0
0714	PK-ESCR 046 B STEEL UMBRELLA SLEEVE AND BRACKET	14.00	EACH	5,300	0	$ 74,200	0
0715	PK-ESCR 046 C STEEL UMBRELLA SURFACE TABLE MOUNT	36.00	EACH	5,300	0	$ 190,800	0
0716	PK-ESCR 046 D BIGBELLY BIN	67.00	EACH	6,900	0	$ 462,300	0
0717	PK-ESCR 049 M+O PRE-FABRICATED BUILDING	1.00	L.S.	2,000,000	0	$ 2,000,000	0
0718	PK-ESCR 051 M+O FUEL STORAGE CABINET	12.00	EACH	1,600	0	$ 19,200	0
0719	PK-ESCR 070 CHAIN LINK FENCE 16'-0" HT.	2,496.00	L.F.	250	0	$ 624,000	0

BID SCHEDULE FORM

COL. 1 SEQ. NO	COL. 2 ITEM NUMBER and DESCRIPTION	COL. 3 ENGINEER'S ESTIMATE OF QUANTITY	COL. 4 UNIT	COL. 5 UNIT PRICE (IN FIGURES) DOLLARS	CTS	COL. 6 EXTENDED AMOUNT (IN FIGURES) DOLLARS	CTS
0720	PK-ESCR 071 SINGLE GATE FOR CHAIN LINK FENCE 4' HT.	4.00	EACH	6,500	0	$ 26,000	0
0721	PK-ESCR 0712 TREE REMOVAL (6" - 12" DBH)	114.00	EACH	1,100	0	$ 125,400	0
0722	PK-ESCR 0712S STUMP REMOVAL 6" TO 12" DIAMETER	18.00	EACH	550	0	$ 9,900	0
0723	PK-ESCR 073 DOUBLE GATE FOR CHAIN LINK FENCE 4' HT.	2.00	EACH	12,000	0	$ 24,000	0
0724	PK-ESCR 081 CLAY STORAGE BOX	3.00	EACH	11,000	0	$ 33,000	0
0725	PK-ESCR 093 C SAFETY SURFACE 10' FALL HEIGHT, OTHER COLOR	13,966.00	S.F.	55	0	$ 768,130	0
0726	PK-ESCR 097 PLAY EQUIPMENT - 10TH ST.	1.00	L.S.	200,000	0	$ 200,000	0
0727	PK-ESCR 103 SIGNAGE AND WAYFINDING (BIKEWAY)	10.00	EACH	1,600	0	$ 16,000	0

BID SCHEDULE FORM

COL. 1 SEQ. NO	COL. 2 ITEM NUMBER and DESCRIPTION	COL. 3 ENGINEER'S ESTIMATE OF QUANTITY	COL. 4 UNIT	COL. 5 UNIT PRICE (IN FIGURES) DOLLARS	CTS	COL. 6 EXTENDED AMOUNT (IN FIGURES) DOLLARS	CTS
0728	PK-ESCR 105 THERMOPLASTIC EXTRUDED LINE 4" WIDTH	17,582.00	L.F.	1	25	$ 21,977	50
0729	PK-ESCR 106 THERMOPLASTIC HFPRM LINES, SYMBOLS	241.00	EACH	225	0	$ 54,225	0
0730	PK-ESCR 109 SOD NEW LAWN	323,252.00	S.F.	1	25	$ 404,065	0
0731	PK-ESCR 110 C10-12 CONIFER TREE PLANTING 10-12 FT. HEIGHT	136.00	EACH	700	0	$ 95,200	0
0732	PK-ESCR 110 C12-14 CONIFER TREE PLANTING 12-14 FT. HEIGHT	115.00	EACH	1,200	0	$ 138,000	0
0733	PK-ESCR 110 C14-16 CONIFER TREE PLANTING 14-16 FT. HEIGHT	61.00	EACH	1,000	0	$ 61,000	0
0734	PK-ESCR 110 C8-10 CONIFER TREE PLANTING 8-10 FT. HEIGHT	87.00	EACH	750	0	$ 65,250	0
0735	PK-ESCR 110 D18-24 SHRUB 18-24 IN. HEIGHT	1,687.00	EACH	90	0	$ 151,830	0

NEW YORK CITY DEPARTMENT OF DESIGN AND CONSTRUCTION
DIVISION OF INFRASTRUCTURE - BUREAU OF DESIGN

PROJECT ID: SANDRESM1
CONTRACT PIN: 8502021RC0001C
REBID: N/A

BID SCHEDULE FORM

COL. 1 SEQ. NO	COL. 2 ITEM NUMBER and DESCRIPTION	COL. 3 ENGINEER'S ESTIMATE OF QUANTITY	COL. 4 UNIT	COL. 5 UNIT PRICE (IN FIGURES) DOLLARS	CTS	COL. 6 EXTENDED AMOUNT (IN FIGURES) DOLLARS	CTS
0736	PK-ESCR 110 D24-30 SHRUB 24-30 IN. HEIGHT	287.00	EACH	100	0	$ 28,700	0
0737	PK-ESCR 110 D2G SHRUB 2 GALLON	3,237.00	EACH	35	0	$ 113,295	0
0738	PK-ESCR 110 D30-36 SHRUB 30-36 IN. HEIGHT	687.00	EACH	125	0	$ 85,875	0
0739	PK-ESCR 110 D3G SHRUB 3 GALLON	2,620.00	EACH	70	0	$ 183,400	0
0740	PK-ESCR 110 D5G SHRUB 5 GALLON	12,166.00	EACH	85	0	$ 1,034,110	0
0741	PK-ESCR 110 D7G SHRUB 7 GALLON	589.00	EACH	135	0	$ 79,515	0
0742	PK-ESCR 110 FB BULB	10,327.00	EACH	1	75	$ 18,072	25
0743	PK-ESCR 110 M10-12 MULTI-STEM TREE PLANTING 10-12 FT. HEIGHT	43.00	EACH	1,000	0	$ 43,000	0

BID SCHEDULE FORM

COL. 1 SEQ. NO	COL. 2 ITEM NUMBER and DESCRIPTION	COL. 3 ENGINEER'S ESTIMATE OF QUANTITY	COL. 4 UNIT	COL. 5 UNIT PRICE (IN FIGURES) DOLLARS	CTS	COL. 6 EXTENDED AMOUNT (IN FIGURES) DOLLARS	CTS
0744	PK-ESCR 110 M12-14 MULTI-STEM TREE PLANTING 12-14 FT. HEIGHT	43.00	EACH	1,300	0	$ 55,900	0
0745	PK-ESCR 110 M14-16 MULTI-STEM TREE PLANTING 14-16 FT. HEIGHT	43.00	EACH	2,000	0	$ 86,000	0
0746	PK-ESCR 110 M8-10 MULTI-STEM TREE PLANTING 8-10 FT. HEIGHT	63.00	EACH	900	0	$ 56,700	0
0747	PK-ESCR 110 OG1G ORNAMENTAL GRASS 1 GALLON	19,674.00	EACH	25	0	$ 491,850	0
0748	PK-ESCR 110 OG1QT ORNAMENTAL GRASS 1 QUART	14,501.00	EACH	11	0	$ 159,511	0
0749	PK-ESCR 110 PG1G PERENNIAL/GROUNDCOVER 1 GALLON	17,782.00	EACH	23	0	$ 408,986	0
0750	PK-ESCR 110 T10G TREE PLANTING 10 GALLON CONTAINER	57.00	EACH	125	0	$ 7,125	0
0751	PK-ESCR 110 T20-25 TREE PLANTING 2.0"-2.5" CALIPER	10.00	EACH	600	0	$ 6,000	0

BID SCHEDULE FORM

COL. 1 SEQ. NO	COL. 2 ITEM NUMBER and DESCRIPTION	COL. 3 ENGINEER'S ESTIMATE OF QUANTITY	COL. 4 UNIT	COL. 5 UNIT PRICE (IN FIGURES) DOLLARS	CTS	COL. 6 EXTENDED AMOUNT (IN FIGURES) DOLLARS	CTS
0752	PK-ESCR 110 T20G TREE PLANTING 20 GALLON CONTAINER	3.00	EACH	225	0	$ 675	0
0753	PK-ESCR 110 T25-30 TREE PLANTING 2.5"-3.0" CALIPER	355.00	EACH	750	0	$ 266,250	0
0754	PK-ESCR 110 T30-35 TREE PLANTING 3.0"-3.5" CALIPER	901.00	EACH	1,050	0	$ 946,050	0
0755	PK-ESCR 110 T5G TREE PLANTING 5 GALLON CONTAINER	69.00	EACH	100	0	$ 6,900	0
0756	PK-ESCR 110 T6-8 TREE PLANTING 6-8 FT. HEIGHT	4.00	EACH	175	0	$ 700	0
0757	PK-ESCR 111 SYNTHETIC TURF-INFILL TYPE ON STONE BASE	258,827.00	S.F.	14	0	$ 3,623,578	0
0758	PK-ESCR 1318 TREE REMOVAL (12" - 18" DBH)	185.00	EACH	2,100	0	$ 388,500	0
0759	PK-ESCR 132 COLOR SEAL COAT SYSTEM	10,361.00	S.Y.	53	0	$ 549,133	0

BID SCHEDULE FORM

COL. 1 SEQ. NO	COL. 2 ITEM NUMBER and DESCRIPTION	COL. 3 ENGINEER'S ESTIMATE OF QUANTITY	COL. 4 UNIT	COL. 5 UNIT PRICE (IN FIGURES) DOLLARS	CTS	COL. 6 EXTENDED AMOUNT (IN FIGURES) DOLLARS	CTS
0760	PK-ESCR 132 B PAINT LINES - 2" WIDTH - COLOR SEAL COAT AREA	7,655.00	L.F.	1	25	$ 9,568	75
0761	PK-ESCR 137 LONG JUMP, LANDING AND PIT	1.00	L.S.	40,000	0	$ 40,000	0
0762	PK-ESCR 148 GEOTEXTILES-DRAINAGE	419.00	S.Y.	5	50	$ 2,304	50
0763	PK-ESCR 149 GEOTEXTILES-SEPARATION	5,783.00	S.Y.	5	50	$ 31,806	50
0764	PK-ESCR 152 BENCH, 1964 WORLD'S FAIR W/ RPL SLATS W/ ARMS, 4' LENGTH	284.00	L.F.	400	0	$ 113,600	0
0765	PK-ESCR 155 BENCH, TYPE "C" (SPORTS) W/ RPL SLATS - BACKLESS	294.00	L.F.	750	0	$ 220,500	0
0766	PK-ESCR 156 BICYCLE RACK "HOOP"	59.00	EACH	2,700	0	$ 159,300	0
0767	PK-ESCR 158 PICNIC TABLE - FIXED	4.00	EACH	7,500	0	$ 30,000	0

BID SCHEDULE FORM

COL. 1 SEQ. NO	COL. 2 ITEM NUMBER and DESCRIPTION	COL. 3 ENGINEER'S ESTIMATE OF QUANTITY	COL. 4 UNIT	COL. 5 UNIT PRICE (IN FIGURES) DOLLARS	CTS	COL. 6 EXTENDED AMOUNT (IN FIGURES) DOLLARS	CTS
0768	PK-ESCR 164 CHAIN LINK FENCE 12'-0" HT., 1 3/4" MESH (TENNIS)	1,846.00	L.F.	200	0	$ 369,200	0
0769	PK-ESCR 167 CHAIN LINK FENCE 4'-0" HT.	1,408.00	L.F.	130	0	$ 183,040	0
0770	PK-ESCR 170 STEEL FENCE 4'-0" HIGH	2,115.00	L.F.	550	0	$ 1,163,250	0
0771	PK-ESCR 170B 2'-6" HIGH STEEL FENCE	121.00	L.F.	550	0	$ 66,550	0
0772	PK-ESCR 171 SINGLE GATE FOR STEEL FENCE 4'-0" HIGH	2.00	EACH	2,600	0	$ 5,200	0
0773	PK-ESCR 178 BASEBALL ACCESSORIES SET	3.00	SETS	1,100	0	$ 3,300	0
0774	PK-ESCR 180 BASKETBALL BACKSTOP SINGLE POST (PC BACKBOARD)	8.00	EACH	5,300	0	$ 42,400	0
0775	PK-ESCR 181 HOODED BASEBALL BACKSTOP	7.00	EACH	100,000	0	$ 700,000	0

BID SCHEDULE FORM

COL. 1 SEQ. NO	COL. 2 ITEM NUMBER and DESCRIPTION	COL. 3 ENGINEER'S ESTIMATE OF QUANTITY	COL. 4 UNIT	COL. 5 UNIT PRICE (IN FIGURES) DOLLARS	CTS	COL. 6 EXTENDED AMOUNT (IN FIGURES) DOLLARS	CTS
0776	PK-ESCR 182 PREPARE SKINNED AREA	2,816.00	S.Y.	160	0	$ 450,560	0
0777	PK-ESCR 183 A SOCCER GOALS - PORTABLE	3.00	SETS	13,000	0	$ 39,000	0
0778	PK-ESCR 183 B SOCCER GOAL JUNIOR SIZE, PORTABLE	1.00	SETS	13,000	0	$ 13,000	0
0779	PK-ESCR 184 TENNIS COURT ACCESSORIES SET	12.00	EACH	11,000	0	$ 132,000	0
0780	PK-ESCR 185 PAINT LINES 4" SYNTHETIC TURF	4,935.00	L.F.	2	50	$ 12,337	50
0781	PK-ESCR 188 PERFORATED POLYETHYLENE CORRUGATED PIPE (12")	2,250.00	L.F.	125	0	$ 281,250	0
0782	PK-ESCR 188 A POLYETHYLENE CORRUGATED PIPE (6")	30.00	L.F.	200	0	$ 6,000	0
0783	PK-ESCR 188P POLYETHYLENE CORRUGATED PIPE (12")	1,432.00	L.F.	200	0	$ 286,400	0

BID SCHEDULE FORM

COL. 1 SEQ. NO	COL. 2 ITEM NUMBER and DESCRIPTION	COL. 3 ENGINEER'S ESTIMATE OF QUANTITY	COL. 4 UNIT	COL. 5 UNIT PRICE (IN FIGURES) DOLLARS	CTS	COL. 6 EXTENDED AMOUNT (IN FIGURES) DOLLARS	CTS
0784	PK-ESCR 189 B PERFORATED POLYETHYLINE CORRUGATED PIPE (6")	6,662.00	L.F.	200	0	$ 1,332,400	0
0785	PK-ESCR 1924 TREE REMOVAL (18" - 24" DBH)	175.00	EACH	3,100	0	$ 542,500	0
0786	PK-ESCR 200 STEEL SLAT ROLLING GATE, 8'-0" HT., 25'-0" W.	2.00	EACH	11,000	0	$ 22,000	0
0787	PK-ESCR 210 PAINT LINES 4 INCH LAWN & CLAY AREAS	650.00	L.F.	2	50	$ 1,625	0
0788	PK-ESCR 215 1964 WORLDS FAIR BAR STOOL	32.00	EACH	2,200	0	$ 70,400	0
0789	PK-ESCR 215A 1964 WORLDS FAIR CHAIR	18.00	EACH	1,600	0	$ 28,800	0
0790	PK-ESCR 218 HOT COAL BIN	8.00	EACH	5,300	0	$ 42,400	0
0791	PK-ESCR 221 STAINLESS STEEL HAND RAIL	241.00	L.F.	600	0	$ 144,600	0

BID SCHEDULE FORM

COL. 1 SEQ. NO	COL. 2 ITEM NUMBER and DESCRIPTION	COL. 3 ENGINEER'S ESTIMATE OF QUANTITY	COL. 4 UNIT	COL. 5 UNIT PRICE (IN FIGURES) DOLLARS	CTS	COL. 6 EXTENDED AMOUNT (IN FIGURES) DOLLARS	CTS
0792	PK-ESCR 2530 TREE REMOVAL (24" - 30" DBH)	81.00	EACH	4,100	0	$ 332,100	0
0793	PK-ESCR 3136 TREE REMOVAL (30" - 36" DBH)	31.00	EACH	4,600	0	$ 142,600	0
0794	PK-ESCR 3742 TREE REMOVAL (36"-42" DBH)	5.00	EACH	5,100	0	$ 25,500	0
0795	PK-ESCR 400 RECONSTRUCT DRAINAGE STRUCTURE	1.00	EACH	11,000	0	$ 11,000	0
0796	PK-ESCR 402 CATCH BASIN COVER & FRAME WITH BALLAST SCREEN	21.00	EACH	6,900	0	$ 144,900	0
0797	PK-ESCR 403 DUCTILE IRON PIPE SEWER - 18" DIA	1,728.00	L.F.	750	0	$ 1,296,000	0
0798	PK-ESCR 404 DUCTILE IRON PIPE SEWER - 24" DIA	21.00	L.F.	1,200	0	$ 25,200	0
0799	PK-ESCR 405 PRECAST CONCRETE DRYWELL	6.00	EACH	6,100	0	$ 36,600	0

BID SCHEDULE FORM

COL. 1 SEQ. NO	COL. 2 ITEM NUMBER and DESCRIPTION	COL. 3 ENGINEER'S ESTIMATE OF QUANTITY	COL. 4 UNIT	COL. 5 UNIT PRICE (IN FIGURES) DOLLARS	CTS	COL. 6 EXTENDED AMOUNT (IN FIGURES) DOLLARS	CTS
0800	PK-ESCR 450 IP PTZ HDTV DOME CAMERA AND MOUNTING ASSEMBLY	3.00	EACH	6,900	0	$ 20,700	0
0801	PK-ESCR 451 VEHICLE TRANSMIT TAG READER OSS-1 JACKSON AV	1.00	L.S.	12,000	0	$ 12,000	0
0802	PK-ESCR 452 VEHICLE TRANSMIT TAG ANTENNA OSS-1 JACKSON AV	1.00	L.S.	32,000	0	$ 32,000	0
0803	PK-ESCR 453 VEHICLE TRANSMIT TAG READER OSS-8N FDR NORTH	1.00	L.S.	12,000	0	$ 12,000	0
0804	PK-ESCR 454 VEHICLE TRANSMIT TAG ANTENNA OSS-8N FDR NORTH	1.00	L.S.	16,000	0	$ 16,000	0
0805	PK-ESCR 455 VEHICLE TRANSMIT TAG READER OSS-8S FDR SOUTH	1.00	L.S.	12,000	0	$ 12,000	0
0806	PK-ESCR 456 VEHICLE TRANSMIT TAG ANTENNA OSS-8S FDR SOUTH	1.00	L.S.	16,000	0	$ 16,000	0
0807	PK-ESCR 461 NEMA 3R ITS SIGNAL CABINETS, TYPE P44	1.00	EACH	12,000	0	$ 12,000	0

BID SCHEDULE FORM

COL. 1 SEQ. NO	COL. 2 ITEM NUMBER and DESCRIPTION	COL. 3 ENGINEER'S ESTIMATE OF QUANTITY	COL. 4 UNIT	COL. 5 UNIT PRICE (IN FIGURES) DOLLARS	CTS	COL. 6 EXTENDED AMOUNT (IN FIGURES) DOLLARS	CTS
0808	PK-ESCR 462 NEMA 3R ITS SIGNAL CABINETS, TYPE 344	4.00	EACH	23,000	0	$ 92,000	0
0809	PK-ESCR 464 NEMA 3R ITS SIGNAL CABINETS, TYPE ATSC-8	1.00	EACH	32,000	0	$ 32,000	0
0810	PK-ESCR 465 RADAR BASED TRAFFIC MEASURING SENSOR (RTMS)	1.00	EACH	9,900	0	$ 9,900	0
0811	PK-ESCR 466 ITS CAT 6 OUTDOOR ETHERNET CABLE-GEL FILLED	2,250.00	L.F.	3	0	$ 6,750	0
0812	PK-ESCR 467 ITS REMOVALS	1.00	L.S.	8,900	0	$ 8,900	0
0813	PK-ESCR 468 LED FULL COLOR VARIABLE MESSAGE SIGN (VMS) - OSS-1	1.00	EACH	100,000	0	$ 100,000	0
0814	PK-ESCR 469 LED FULL COLOR VARIABLE MESSAGE SIGN (VMS) - OSS-8S	1.00	EACH	65,000	0	$ 65,000	0
0815	PK-ESCR 501 TENNIS BUILDING	1.00	L.S.	5,222,271	75	$ 5,222,271	75

BID SCHEDULE FORM

COL. 1 SEQ. NO	COL. 2 ITEM NUMBER and DESCRIPTION	COL. 3 ENGINEER'S ESTIMATE OF QUANTITY	COL. 4 UNIT	COL. 5 UNIT PRICE (IN FIGURES) DOLLARS	CTS	COL. 6 EXTENDED AMOUNT (IN FIGURES) DOLLARS	CTS
0816	PK-ESCR 502 TRACK BUILDING	1.00	L.S.	15,000,000	0	$ 15,000,000	0
0817	PK-ESCR 503 10TH STREET COMFORT STATION	1.00	L.S.	4,000,000	0	$ 4,000,000	0
0818	PK-ESCR 50A M+O CANOPY STRUCTURE, AREA 1	1.00	L.S.	1,500,000	0	$ 1,500,000	0
0819	PK-ESCR 50B M+O CANOPY STRUCTURE, AREA 2	1.00	L.S.	2,100,000	0	$ 2,100,000	0
0820	PK-ESCR 600 SAND BASE FOR UTILITY LINE	2,442.00	C.Y.	85	0	$ 207,570	0
0821	PK-ESCR 601 WET CONNECTION - 6" DIA.	32.00	EACH	9,500	0	$ 304,000	0
0822	PK-ESCR 602 WET CONNECTION - 8" DIA.	1.00	EACH	750	0	$ 750	0
0823	PK-ESCR 603 RPZ & WATER METER W/REMOTE AND HEATED ENCLOSURE	3.00	EACH	53,000	0	$ 159,000	0

BID SCHEDULE FORM

COL. 1 SEQ. NO	COL. 2 ITEM NUMBER and DESCRIPTION	COL. 3 ENGINEER'S ESTIMATE OF QUANTITY	COL. 4 UNIT	COL. 5 UNIT PRICE (IN FIGURES) DOLLARS	CTS	COL. 6 EXTENDED AMOUNT (IN FIGURES) DOLLARS	CTS
0824	PK-ESCR 605 4" DIA. DUCTILE IRON CEMENT WATER PIPE LINE	60.00	L.F.	350	0	$ 21,000	0
0825	PK-ESCR 606 6" DIA. DUCTILE IRON CEMENT WATER PIPE LINE	700.00	L.F.	350	0	$ 245,000	0
0826	PK-ESCR 607 8" DIA. DUCTILE IRON CEMENT WATER PIPE LINE	240.00	L.F.	375	0	$ 90,000	0
0827	PK-ESCR 608 10" DIA. DUCTILE IRON CEMENT WATER PIPE LINE	7,200.00	L.F.	375	0	$ 2,700,000	0
0828	PK-ESCR 609 WET CONNECTION - 4" DIA.	1.00	EACH	10,000	0	$ 10,000	0
0829	PK-ESCR 610 GATE VALVE - MECHANICAL JOINTS - 4" DIA.	1.00	EACH	4,000	0	$ 4,000	0
0830	PK-ESCR 611 GATE VALVE - MECHANICAL JOINTS - 6" DIA.	1.00	EACH	4,200	0	$ 4,200	0
0831	PK-ESCR 612 GATE VALVE - MECHANICAL JOINTS - 8" DIA.	3.00	EACH	5,100	0	$ 15,300	0

BID SCHEDULE FORM

COL. 1 SEQ. NO	COL. 2 ITEM NUMBER and DESCRIPTION	COL. 3 ENGINEER'S ESTIMATE OF QUANTITY	COL. 4 UNIT	COL. 5 UNIT PRICE (IN FIGURES) DOLLARS	CTS	COL. 6 EXTENDED AMOUNT (IN FIGURES) DOLLARS	CTS
0832	PK-ESCR 613 GATE VALVE - MECHANICAL JOINTS - 10" DIA.	2.00	EACH	6,000	0	$ 12,000	0
0833	PK-ESCR 614 QUICK COUPLING VALVE AND VACUUM BREAKER WITH CHAMBER	100.00	EACH	2,500	0	$ 250,000	0
0834	PK-ESCR 615 FIRE HYDRANT WITH FENDERS	31.00	EACH	11,000	0	$ 341,000	0
0835	PK-ESCR 616 DECORATIVE STEEL SPRAY FIXTURES DELANCY STREET	1.00	L.S.	85,000	0	$ 85,000	0
0836	PK-ESCR 617 DECORATIVE STEEL SPRAY FIXTURES HOUSTON STREET	1.00	L.S.	120,000	0	$ 120,000	0
0837	PK-ESCR 618 DECORATIVE STEEL SPRAY FIXTURES 10TH STREET	1.00	L.S.	85,000	0	$ 85,000	0
0838	PK-ESCR 619 SPORT STEEL SPRAY FIXTURE	11.00	EACH	40,000	0	$ 440,000	0
0839	PK-ESCR 621 WATER TAP 2" DIA.	3.00	EACH	27,000	0	$ 81,000	0

BID SCHEDULE FORM

COL. 1 SEQ. NO	COL. 2 ITEM NUMBER and DESCRIPTION	COL. 3 ENGINEER'S ESTIMATE OF QUANTITY	COL. 4 UNIT	COL. 5 UNIT PRICE (IN FIGURES) DOLLARS	CTS	COL. 6 EXTENDED AMOUNT (IN FIGURES) DOLLARS	CTS
0840	PK-ESCR 623 CURB AND PROPERTY LINE VALVES - 2" DIA.	1.00	SETS	1,500	0	$ 1,500	0
0841	PK-ESCR 626 PLUG VALVE - 1" DIA.	23.00	EACH	600	0	$ 13,800	0
0842	PK-ESCR 628 PLUG VALVE 1-1/2" DIA.	140.00	EACH	600	0	$ 84,000	0
0843	PK-ESCR 629 PLUG VALVE - 2" DIA.	5.00	EACH	600	0	$ 3,000	0
0844	PK-ESCR 630 TYPE "K" COPPER TUBING - 1" DIA.	1,480.00	L.F.	75	0	$ 111,000	0
0845	PK-ESCR 631 TYPE "K" COPPER TUBING 1-1/4" DIA.	260.00	L.F.	75	0	$ 19,500	0
0846	PK-ESCR 632 TYPE "K" COPPER TUBING 1-1/2" DIA.	7,190.00	L.F.	75	0	$ 539,250	0
0847	PK-ESCR 633 TYPE "K" COPPER TUBING - 2" DIA.	16,350.00	L.F.	75	0	$ 1,226,250	0

BID SCHEDULE FORM

COL. 1 SEQ. NO	COL. 2 ITEM NUMBER and DESCRIPTION	COL. 3 ENGINEER'S ESTIMATE OF QUANTITY	COL. 4 UNIT	COL. 5 UNIT PRICE (IN FIGURES) DOLLARS	CTS	COL. 6 EXTENDED AMOUNT (IN FIGURES) DOLLARS	CTS
0848	PK-ESCR 634 CAST IRON VALVE BOX, 5 1/4" DIA.	158.00	EACH	225	0	$ 35,550	0
0849	PK-ESCR 637 BOTTLE FILLER W/ HI-LO DRINKING FOUNTAIN BASINS	21.00	EACH	17,000	0	$ 357,000	0
0850	PK-ESCR 638 TYPE "K" COPPER TUBING - 3" DIA.	2,680.00	L.F.	90	0	$ 241,200	0
0851	PK-ESCR 641 IN-GROUND IRRIGATION SYSTEM-AUTOMATIC	199,480.00	S.Y.	11	0	$ 2,194,280	0
0852	PK-ESCR 642 3" GAS LINE TO FIREBOAT HOUSE	740.00	L.F.	500	0	$ 370,000	0
0853	PK-ESCR 643 4" GAS MAIN TO TRACK AND FIELD	100.00	L.F.	275	0	$ 27,500	0
0854	PK-ESCR 644 SERVICE CAST IRON SOIL PIPE - 4" DIA.	190.00	L.F.	125	0	$ 23,750	0
0855	PK-ESCR 645 1" DIA. HOT DIPPED/HEAVY GAUGE GALVANIZED RIGID STEEL CONDUIT	550.00	L.F.	35	0	$ 19,250	0

BID SCHEDULE FORM

COL. 1 SEQ. NO	COL. 2 ITEM NUMBER and DESCRIPTION	COL. 3 ENGINEER'S ESTIMATE OF QUANTITY	COL. 4 UNIT	COL. 5 UNIT PRICE (IN FIGURES) DOLLARS	CTS	COL. 6 EXTENDED AMOUNT (IN FIGURES) DOLLARS	CTS
0856	PK-ESCR 646 MISCELLANEOUS IRON AND STEEL	36,300.00	LBS.	2	50	$ 90,750	0
0857	PK-ESCR 650 TEMPORARY POWER FIREBOAT HOUSE	18.00	MONTH	14,000	0	$ 252,000	0
0858	PK-ESCR 651 ELECTRIC VEHICLE (EV) SINGLE CHARGING STATION	2.00	EACH	11,000	0	$ 22,000	0
0859	PK-ESCR 652 ELECTRIC VEHICLE (EV) DUAL CHARGING STATION	5.00	EACH	15,000	0	$ 75,000	0
0860	PK-ESCR 653 PHOTOVOLTAIC SYSTEM - SOUTHERN M&O CANOPY	1.00	EACH	70,000	0	$ 70,000	0
0861	PK-ESCR 654 PHOTOVOLTAIC SYSTEM - NORTHERN M&O CANOPY	1.00	EACH	110,000	0	$ 110,000	0
0862	PK-ESCR 655 ELECTRIC SERVICE AND DISTRIBUTION WORK AT CENTRAL M & O FACILITY	1.00	L.S.	75,000	0	$ 75,000	0
0863	PK-ESCR 656 ELECTRIC SERVICE AND DISTRIBUTION WORK AT NORTHERN M & O FACILITY	1.00	L.S.	65,000	0	$ 65,000	0

BID SCHEDULE FORM

COL. 1 SEQ. NO	COL. 2 ITEM NUMBER and DESCRIPTION	COL. 3 ENGINEER'S ESTIMATE OF QUANTITY	COL. 4 UNIT	COL. 5 UNIT PRICE (IN FIGURES) DOLLARS	CTS	COL. 6 EXTENDED AMOUNT (IN FIGURES) DOLLARS	CTS
0864	PK-ESCR 657 ELECTRIC SERVICE AND DISTRIBUTION WORK AT AMPITHEATER AREA AND FLOODLIGHTING	1.00	L.S.	85,000	0	$ 85,000	0
0865	PK-ESCR 658 ELECTRIC SERVICE AND DISTRIBUTION WORK AT GRAND STREET FERRY	1.00	L.S.	35,000	0	$ 35,000	0
0866	PK-ESCR 660 SPORTS FIELD FLOOD LIGHTING - FIELDS 1 & 2	1.00	L.S.	450,000	0	$ 450,000	0
0867	PK-ESCR 661 SPORTS FIELD FLOOD LIGHTING - FIELD 6	1.00	L.S.	350,000	0	$ 350,000	0
0868	PK-ESCR 662 LED SOLAR LIGHT	99.00	EACH	8,100	0	$ 801,900	0
0869	PK-ESCR 663 LED 120 VOLT LIGHT SIMILAR TO SOLAR LIGHT	7.00	EACH	8,100	0	$ 56,700	0
0870	PK-ESCR 664 ELECTRIC SERVICE AND DISTRIBUTION WORK AT EAST 10TH STREET BRIDGE STORAGE	1.00	L.S.	15,000	0	$ 15,000	0
0871	PK-ESCR 665 INSTALL FDNY SOLAR FIRE ALARM CALL BOX FURNISHED BY FDNY	48.00	EACH	500	0	$ 24,000	0

BID SCHEDULE FORM

COL. 1 SEQ. NO	COL. 2 ITEM NUMBER and DESCRIPTION	COL. 3 ENGINEER'S ESTIMATE OF QUANTITY	COL. 4 UNIT	COL. 5 UNIT PRICE (IN FIGURES)		COL. 6 EXTENDED AMOUNT (IN FIGURES)	
				DOLLARS	CTS	DOLLARS	CTS
0872	PK-ESCR 666 #10 AWG COPPER, 600V WIRE	3,650.00	L.F.	2	0	$ 7,300	0
0873	PK-ESCR 667 #8 AWG COPPER, 600V WIRE	330.00	L.F.	3	0	$ 990	0
0874	PK-ESCR 668 #4 AWG COPPER, 600V WIRE	12,410.00	L.F.	5	0	$ 62,050	0
0875	PK-ESCR 669 2" DIA. HIGH DENSITY POLYETHYLENE (HDPE) SCHEDULE 80 CONDUIT	42,500.00	L.F.	50	0	$ 2,125,000	0
0876	PK-ESCR 670 3/4" DIA. HOT DIPPED/HEAVY GAUGE GALVANIZED RIGID STEEL CONDUIT	510.00	L.F.	25	0	$ 12,750	0
0877	PK-ESCR 671 1-1/2" DIA. HOT DIPPED/HEAVY GAUGE GALVANIZED RIGID STEEL CONDUIT	2,050.00	L.F.	40	0	$ 82,000	0
0878	PK-ESCR 672 2" DIA. HOT DIPPED/HEAVY GAUGE GALVANIZED RIGID STEEL CONDUIT	2,600.00	L.F.	40	0	$ 104,000	0
0879	PK-ESCR 673 3" DIA. HOT DIPPED/HEAVY GAUGE GALVANIZED RIGID STEEL CONDUIT	8,780.00	L.F.	70	0	$ 614,600	0

BID SCHEDULE FORM

COL. 1 SEQ. NO	COL. 2 ITEM NUMBER and DESCRIPTION	COL. 3 ENGINEER'S ESTIMATE OF QUANTITY	COL. 4 UNIT	COL. 5 UNIT PRICE (IN FIGURES) DOLLARS	CTS	COL. 6 EXTENDED AMOUNT (IN FIGURES) DOLLARS	CTS
0880	PK-ESCR 674 4" DIA. HOT DIPPED/HEAVY GAUGE GALVANIZED RIGID STEEL CONDUIT	3,360.00	L.F.	110	0	$ 369,600	0
0881	PK-ESCR 675 TELEPHONE CONDUIT - 4" DIA.	5,070.00	L.F.	110	0	$ 557,700	0
0882	PK-ESCR 676 PULLBOXES WITH FRAME AND COVER 24"L X 18" W X 26" D, TYPE 2418 (2-R)	22.00	EACH	4,200	0	$ 92,400	0
0883	PK-ESCR 678 PULLBOXES WITH FRAME AND COVER 48"L X 24" W X 26" D, TYPE 4824 (6-R)	40.00	EACH	6,100	0	$ 244,000	0
0884	PK-ESCR 679 ELECTRICAL MANHOLE	5.00	EACH	7,500	0	$ 37,500	0
0885	PK-ESCR 680 #12 AWG COPPER, 600V WIRE	1,900.00	L.F.	2	0	$ 3,800	0
0886	PK-ESCR 681 #6 AWG COPPER, 600V WIRE	20,250.00	L.F.	4	0	$ 81,000	0
0887	PK-ESCR 682 #2 AWG COPPER, 600V WIRE	12,130.00	L.F.	6	0	$ 72,780	0

BID SCHEDULE FORM

COL. 1 SEQ. NO	COL. 2 ITEM NUMBER and DESCRIPTION	COL. 3 ENGINEER'S ESTIMATE OF QUANTITY	COL. 4 UNIT	COL. 5 UNIT PRICE (IN FIGURES) DOLLARS	CTS	COL. 6 EXTENDED AMOUNT (IN FIGURES) DOLLARS	CTS
0888	PK-ESCR 683 #1/0 AWG COPPER, 600V WIRE	6,280.00	L.F.	8	0	$ 50,240	0
0889	PK-ESCR 684 #4/0 AWG COPPER, 600V WIRE	5,500.00	L.F.	13	0	$ 71,500	0
0890	PK-ESCR 685 500 KCMIL COPPER, 600V WIRE	11,880.00	L.F.	22	0	$ 261,360	0
0891	PK-ESCR 686 #2/0 AWG COPPER, 600V WIRE	37,960.00	L.F.	10	0	$ 379,600	0
0892	PK-ESCR 688 STAINLESS STEEL ENCLOSURE FOR GAS METER	1.00	EACH	5,600	0	$ 5,600	0
0893	PK-ESCR 690 CONDUIT INTERIOR SEALING FITTING	146.00	EACH	600	0	$ 87,600	0
0894	PK-ESCR 691 BRICK MASONRY/PRECAST CONCRETE FOR DRAINAGE STRUCTURE	1,570.00	C.Y.	500	0	$ 785,000	0
0895	PK-ESCR 692 ELECTRIC SERVICE AND PANEL WORK AT EAST RIVER HOUSES PARKING LOT	1.00	L.S.	10,000	0	$ 10,000	0

BID SCHEDULE FORM

COL. 1 SEQ. NO	COL. 2 ITEM NUMBER and DESCRIPTION	COL. 3 ENGINEER'S ESTIMATE OF QUANTITY	COL. 4 UNIT	COL. 5 UNIT PRICE (IN FIGURES) DOLLARS	CTS	COL. 6 EXTENDED AMOUNT (IN FIGURES) DOLLARS	CTS
0896	PK-ESCR 693 DOUBLE CHECK VALVE - 2" DIA.	1.00	EACH	600	0	$ 600	0
0897	PK-ESCR 701 C SAFETY SURFACE 8' FALL HEIGHT, OTHER COLOR	4,933.00	S.F.	75	0	$ 369,975	0
0898	PK-ESCR 703 A ADULT FITNESS EQUIPMENT	1.00	L.S.	120,000	0	$ 120,000	0
0899	PK-ESCR 703 B ADULT FITNESS EQUIPMENT, CHALLENGE COURSE	1.00	L.S.	90,000	0	$ 90,000	0
0900	PK-ESCR 705 SWING - 7'-0" WITH INCLUSIVE SEAT AND TOT BUCKET SEAT - TYPE 1	1.00	L.S.	11,000	0	$ 11,000	0
0901	PK-ESCR 706 PLAY SWING - 10'-0" HIGH WITH FLAT SEAT	1.00	L.S.	12,000	0	$ 12,000	0
0902	PK-ESCR 714 PIPE RAIL FENCE TYPE B 3 RAIL	285.00	L.F.	500	0	$ 142,500	0

BID SCHEDULE FORM

COL. 1 SEQ. NO	COL. 2 ITEM NUMBER and DESCRIPTION	COL. 3 ENGINEER'S ESTIMATE OF QUANTITY	COL. 4 UNIT	COL. 5 UNIT PRICE (IN FIGURES) DOLLARS	CTS	COL. 6 EXTENDED AMOUNT (IN FIGURES) DOLLARS	CTS
0903	PK-ESCR 715 SC ALLOWANCE FOR SECURITY CAMERA SYSTEM WORK AT EAST RIVER HOUSING PARKING LOT PRICE BID SHALL BE FOR THE FIXED SUM OF $ 16,740.00	1.00	F.S.	16,740	0	$ 16,740	0
0904	PK-ESCR 715A CHAIN LINK FENCE SLIDING GATE AT EAST RIVER HOUSING	1.00	EACH	22,000	0	$ 22,000	0
0905	PK-ESCR 715B CHAIN LINK FENCE SLIDING GATE AT MONTGOMERY STREET	1.00	EACH	16,000	0	$ 16,000	0
0906	PK-ESCR 717 SHREDDED BARK MULCH	3,790.00	C.Y.	50	0	$ 189,500	0
0907	PK-ESCR 718 PICNIC TABLE - FIXED, ACCESSIBLE, WITH UMBRELLA HOLE	11.00	EACH	8,000	0	$ 88,000	0
0908	PK-ESCR 719 PICNIC TABLE - FIXED, ACCESSIBLE	1.00	EACH	10,000	0	$ 10,000	0
0909	PK-ESCR 721 BENCH, 1964 WORLD'S FAIR W/ RPL SLATS, BACKLESS, 8' LENGTH	280.00	L.F.	275	0	$ 77,000	0
0910	PK-ESCR 722 BENCH, 1964 WORLD'S FAIR W/ RPL SLATS W/ ARMS, 8' LENGTH	2,152.00	L.F.	275	0	$ 591,800	0

BID SCHEDULE FORM

COL. 1 SEQ. NO	COL. 2 ITEM NUMBER and DESCRIPTION	COL. 3 ENGINEER'S ESTIMATE OF QUANTITY	COL. 4 UNIT	COL. 5 UNIT PRICE (IN FIGURES) DOLLARS	CTS	COL. 6 EXTENDED AMOUNT (IN FIGURES) DOLLARS	CTS
0911	PK-ESCR 727 A PERMEABLE CONCRETE PAVER AND STONE BASE	1,249.00	S.Y.	175	0	$ 218,575	0
0912	PK-ESCR 727 B SUBBASE MATERIAL FOR PERMEABLE PAVEMENT	24.00	C.Y.	325	0	$ 7,800	0
0913	PK-ESCR 730 STEEL FLAGPOLE	1.00	EACH	32,000	0	$ 32,000	0
0914	PK-ESCR 737 STEEL PIPE BOLLARD	46.00	EACH	5,300	0	$ 243,800	0
0915	PK-ESCR 742 RESILIENT SPORTS SURFACE - 13MM	39,474.00	S.F.	13	0	$ 513,162	0
0916	PK-ESCR 743 TRACK PERIMETER DRAIN	1,200.00	L.F.	16	0	$ 19,200	0
0917	PK-ESCR 744 A BBQ - 2 GRILL TYPE	4.00	EACH	11,000	0	$ 44,000	0
0918	PK-ESCR 744 B BBQ - 3 GRILL TYPE	8.00	EACH	11,000	0	$ 88,000	0

BID SCHEDULE FORM

COL. 1 SEQ. NO	COL. 2 ITEM NUMBER and DESCRIPTION	COL. 3 ENGINEER'S ESTIMATE OF QUANTITY	COL. 4 UNIT	COL. 5 UNIT PRICE (IN FIGURES) DOLLARS	CTS	COL. 6 EXTENDED AMOUNT (IN FIGURES) DOLLARS	CTS
0919	PK-ESCR 747 A FULL DEPTH ASPHALT PAVEMENT	5,377.00	S.Y.	70	0	$ 376,390	0
0920	PK-ESCR 747 B ASPHALT PAVEMENT FOR TENNIS COURTS	12,683.00	S.Y.	75	0	$ 951,225	0
0921	PK-ESCR 748 FOUNDATION MATERIAL FOR CONCRETE (TRUCK MEASURE)	2,077.00	C.Y.	110	0	$ 228,470	0
0922	PK-ESCR 749 FOUNDATION MATERIAL FOR ASPHALT (TRUCK MEASURE)	4,875.00	C.Y.	110	0	$ 536,250	0
0923	PK-ESCR 751 C STEEL PICNIC TABLE, WITH UMBRELLA HOLE	26.00	EACH	8,500	0	$ 221,000	0
0924	PK-ESCR 751 D STEEL PICNIC TABLE, ACCESSIBLE, WITH UMBRELLA HOLE	13.00	EACH	8,500	0	$ 110,500	0
0925	PK-ESCR 753 TOPSOIL FOR PLANTING PITS & BEDS	3,956.00	C.Y.	100	0	$ 395,600	0
0926	PK-ESCR 764 A TEMPORARY WOODEN TREE GUARD	790.00	EACH	800	0	$ 632,000	0

BID SCHEDULE FORM

COL. 1 SEQ. NO	COL. 2 ITEM NUMBER and DESCRIPTION	COL. 3 ENGINEER'S ESTIMATE OF QUANTITY	COL. 4 UNIT	COL. 5 UNIT PRICE (IN FIGURES) DOLLARS	CTS	COL. 6 EXTENDED AMOUNT (IN FIGURES) DOLLARS	CTS
0927	PK-ESCR 764 B TEMPORARY WOODEN TREE GUARD FOR GROVES	2,270.00	L.F.	75	0	$ 170,250	0
0928	PK-ESCR 781 ITS SINGLE MODE, FIBER OPTIC CABLE, 12 STRAND	250.00	L.F.	3	0	$ 750	0
0929	PK-ESCR 782 ITS SINGLE MODE, FIBER OPTIC CABLE, 48 STRAND	250.00	L.F.	4	0	$ 1,000	0
0930	PK-ESCR 783 ITS SINGLE MODE, FIBER OPTIC CABLE, 48 STRAND, REDUCED OD, HIGH FLEXIBLE TYPE	700.00	L.F.	5	0	$ 3,500	0
0931	PK-ESCR 784 ITS SINGLE MODE, FIBER OPTIC CABLE, 216 STRAND	5,000.00	L.F.	6	0	$ 30,000	0
0932	PK-ESCR 785 ITS SINGLE MODE, FIBER OPTIC CABLE, 48 STRAND, SELF- SUPPORTING, AERIAL DROP TYPE	1,000.00	L.F.	5	0	$ 5,000	0
0933	PK-ESCR 786 ITS FIBER OPTIC INNERDUCT, 1 CHANNEL, 1.0 INCH	9,500.00	L.F.	14	0	$ 133,000	0
0934	PK-ESCR 787 ADJUST TOP OF UTILITY STRUCTURE TO GRADE	8.00	EACH	1,200	0	$ 9,600	0

BID SCHEDULE FORM

COL. 1 SEQ. NO	COL. 2 ITEM NUMBER and DESCRIPTION	COL. 3 ENGINEER'S ESTIMATE OF QUANTITY	COL. 4 UNIT	COL. 5 UNIT PRICE (IN FIGURES) DOLLARS	CTS	COL. 6 EXTENDED AMOUNT (IN FIGURES) DOLLARS	CTS
0935	PK-ESCR 788 Allowance for Utility Company Fees PRICE BID SHALL BE FOR THE FIXED SUM OF $ 167,405.00	1.00	F.S.	167,405	0	$ 167,405	0
0936	PK-ESCR 802 A STEEL FENCE W/ CLIMBING PROTECTION 6'-0" HT.	995.00	L.F.	950	0	$ 945,250	0
0937	PK-ESCR 804 1964 WORLDS FAIR CHAISE LOUNGE CHAIR	68.00	EACH	3,000	0	$ 204,000	0
0938	PK-ESCR 805A RPL BAR TOP TABLE - LOW HEIGHT	140.00	S.F.	325	0	$ 45,500	0
0939	PK-ESCR 805B RPL BAR TOP TABLE - HIGH HEIGHT	224.00	S.F.	325	0	$ 72,800	0
0940	PK-ESCR 806 PICNIC TABLE, FIXED, WITH UMBRELLA HOLE	17.00	EACH	8,000	0	$ 136,000	0
0941	PK-ESCR 809 SOD NEW LAWN, SPORTS FIELDS	145,188.00	S.F.	1	30	$ 188,744	40
0942	PK-ESCR 811 A CONCRETE PAVERS TYPE 1	12,858.00	S.Y.	300	0	$ 3,857,400	0

BID SCHEDULE FORM

COL. 1 SEQ. NO	COL. 2 ITEM NUMBER and DESCRIPTION	COL. 3 ENGINEER'S ESTIMATE OF QUANTITY	COL. 4 UNIT	COL. 5 UNIT PRICE (IN FIGURES) DOLLARS	CTS	COL. 6 EXTENDED AMOUNT (IN FIGURES) DOLLARS	CTS
0943	PK-ESCR 811 B CONCRETE PAVERS TYPE 2	6,429.00	S.Y.	300	0	$ 1,928,700	0
0944	PK-ESCR 811 C CONCRETE PAVERS TYPE 3	6,429.00	S.Y.	300	0	$ 1,928,700	0
0945	PK-ESCR 824A RPL TABLE SEAT	1,536.00	S.F.	16	0	$ 24,576	0
0946	PK-ESCR 905 STEEL SLAT DOUBLE SWING GATE, 8'-0" HT., 15'-0" W.	2.00	EACH	4,600	0	$ 9,200	0
0947	PK-ESCR 906 A AMPHITHEATER PRE-CAST CONCRETE SEATWALL MODULE A	125.00	L.F.	550	0	$ 68,750	0
0948	PK-ESCR 906 B AMPHITHEATER PRE-CAST CONCRETE SEATWALL MODULE B	135.00	L.F.	850	0	$ 114,750	0
0949	PK-ESCR 906 C AMPHITHEATER PRE-CAST CONCRETE SEATWALL MODULE C	82.00	L.F.	875	0	$ 71,750	0
0950	PK-ESCR 906 D AMPHITHEATER PRE-CAST CONCRETE SEATWALL MODULE D	84.00	L.F.	475	0	$ 39,900	0

BID SCHEDULE FORM

COL. 1 SEQ. NO	COL. 2 ITEM NUMBER and DESCRIPTION	COL. 3 ENGINEER'S ESTIMATE OF QUANTITY	COL. 4 UNIT	COL. 5 UNIT PRICE (IN FIGURES) DOLLARS	CTS	COL. 6 EXTENDED AMOUNT (IN FIGURES) DOLLARS	CTS
0951	PK-ESCR 906 E AMPHITHEATER PRE-CAST CONCRETE SEATWALL MODULE E	2.00	L.F.	2,000	0	$ 4,000	0
0952	PK-ESCR 907 FISH CLEANING TABLE	1.00	EACH	30,000	0	$ 30,000	0
0953	PK-ESCR 912 NATURE EXPLORATION FABRICATION	1.00	L.S.	32,000	0	$ 32,000	0
0954	PK-ESCR 913 A NATURE PLAY - LOG SCRAMBLE	1.00	L.S.	3,600	0	$ 3,600	0
0955	PK-ESCR 913 B TREE ROUND BORDER	1.00	L.S.	26,000	0	$ 26,000	0
0956	PK-ESCR 913 C TREE ROUND MAZE	1.00	L.S.	26,000	0	$ 26,000	0
0957	PK-ESCR 913 D TREE ROUND SEAT	1.00	L.S.	11,000	0	$ 11,000	0
0958	PK-ESCR 916 TREE SELECTION, STORAGE, PREPARATION	60.00	EACH	160,000	0	$ 9,600,000	0

BID SCHEDULE FORM

COL. 1 SEQ. NO	COL. 2 ITEM NUMBER and DESCRIPTION	COL. 3 ENGINEER'S ESTIMATE OF QUANTITY	COL. 4 UNIT	COL. 5 UNIT PRICE (IN FIGURES) DOLLARS	CTS	COL. 6 EXTENDED AMOUNT (IN FIGURES) DOLLARS	CTS
0959	PK-ESCR 927 A CIRCULAR TABLES AND CHAIRS TYPE 2	2.00	EACH	4,500	0	$ 9,000	0
0960	PK-ESCR 927 B CIRCULAR TABLES AND CHAIRS TYPE 2, ACCESSIBLE	1.00	EACH	4,500	0	$ 4,500	0
0961	PK-ESCR 927 C CIRCULAR TABLES AND CHAIRS TYPE 2, WITH UMBRELLA HOLE	5.00	EACH	11,000	0	$ 55,000	0
0962	PK-ESCR 927 D CIRCULAR TABLES AND CHAIRS TYPE 2, ACCESSIBLE, WITH UMBRELLA HOLE	2.00	EACH	11,000	0	$ 22,000	0
0963	PK-ESCR 929 REMOVE, SALVAGE, STORE AND REINSTALL - GOUVERNEUR GARDENS	1.00	L.S.	550,000	0	$ 550,000	0
0964	PK-ESCR 930 REMOVE, SALVAGE, STORE AND REINSTALL - EAST RIVER PARK	1.00	L.S.	550,000	0	$ 550,000	0
0965	PK-ESCR 937 A HORTICULTURAL DRAINAGE LAYER	4,101.00	C.Y.	225	0	$ 922,725	0
0966	PK-ESCR 937 B HORTICULTURAL SUBSOIL	56,842.00	C.Y.	125	0	$ 7,105,250	0

BID SCHEDULE FORM

COL. 1 SEQ. NO	COL. 2 ITEM NUMBER and DESCRIPTION	COL. 3 ENGINEER'S ESTIMATE OF QUANTITY	COL. 4 UNIT	COL. 5 UNIT PRICE (IN FIGURES) DOLLARS	CTS	COL. 6 EXTENDED AMOUNT (IN FIGURES) DOLLARS	CTS
0967	PK-ESCR 937 C PLANTING SOIL FOR BEDS & PITS	41,525.00	C.Y.	125	0	$ 5,190,625	0
0968	PK-ESCR 937 CS CHINKING STONE	3,156.00	C.Y.	125	0	$ 394,500	0
0969	PK-ESCR 937 D PLANTING SOIL FOR SEEDED & SODDED LAWN AREAS	9,463.00	C.Y.	40	0	$ 378,520	0
0970	PK-ESCR 941 GALVANIZED STEEL CHAIN LINK FENCE - 4'-0" HT.	140.00	L.F.	135	0	$ 18,900	0
0971	PK-ESCR 943 B FIXED BOLLARD TYPE 2	26.00	EACH	5,500	0	$ 143,000	0
0972	PK-ESCR 943 C SECURITY GATE	4.00	EACH	20,000	0	$ 80,000	0
0973	PK-ESCR 943 D REMOVABLE BOLLARD	6.00	EACH	5,300	0	$ 31,800	0
0974	PK-ESCR 943 E FIXED BOLLARD TYPE 3	1.00	EACH	5,300	0	$ 5,300	0

BID SCHEDULE FORM

COL. 1 SEQ. NO	COL. 2 ITEM NUMBER and DESCRIPTION	COL. 3 ENGINEER'S ESTIMATE OF QUANTITY	COL. 4 UNIT	COL. 5 UNIT PRICE (IN FIGURES) DOLLARS	CTS	COL. 6 EXTENDED AMOUNT (IN FIGURES) DOLLARS	CTS
0975	PK-ESCR 944 COMPOST	42.00	C.Y.	175	0	$ 7,350	0
0976	PK-ESCR 945 BIOCHAR	1,642.00	C.Y.	450	0	$ 738,900	0
0977	PK-ESCR 946 GEOCOMPOSITE DRAINAGE BOARD	179,664.00	S.F.	1	50	$ 269,496	0
0978	PK-ESCR 947 STEEL SLAT PRIVACY FENCE M&O	947.00	L.F.	175	0	$ 165,725	0
0979	PK-ESCR 949 SITE PROTECTION - GOUVERNEUR GARDENS	1.00	L.S.	54,000	0	$ 54,000	0
0980	PK-ESCR 950 SITE PROTECTION - EAST RIVER PARK	1.00	L.S.	2,000,000	0	$ 2,000,000	0
0981	PK-ESCR 950 D SITE PROTECTION - CORLEARS HOOK PARK	1.00	L.S.	225,000	0	$ 225,000	0
0982	PK-ESCR 951 A COMPOST TEA - SHRUBS & PERENNIALS	9.70	ACRE	900	0	$ 8,730	0

BID SCHEDULE FORM

COL. 1 SEQ. NO	COL. 2 ITEM NUMBER and DESCRIPTION	COL. 3 ENGINEER'S ESTIMATE OF QUANTITY	COL. 4 UNIT	COL. 5 UNIT PRICE (IN FIGURES) DOLLARS	CTS	COL. 6 EXTENDED AMOUNT (IN FIGURES) DOLLARS	CTS
0983	PK-ESCR 951 B COMPOST TEA - PLANTING BED AND PIT AREA	12.40	ACRE	900	0	$ 11,160	0
0984	PK-ESCR 953 SURVEY TRACK LINES	1.00	L.S.	31,000	0	$ 31,000	0
0985	PK-ESCR 954 POLE VAULT PIT AND COVER	1.00	L.S.	41,000	0	$ 41,000	0
0986	PK-ESCR 961 BIKEWAY SYMBOLS ETCHED INTO CONCRETE	8.00	EACH	400	0	$ 3,200	0
0987	PK-ESCR 966 POROUS GRASS PAVERS	1,395.00	S.F.	26	0	$ 36,270	0
0988	PK-ESCR 967 UNDERDRAINAGE FOR NATURAL TURF FIELD	9,600.00	L.F.	16	0	$ 153,600	0
0989	PK-ESCR 968 A REMOVE-SALVAGE TREE 12-18 CLASS 2 - NYC DELIVERY	127.00	EACH	325	0	$ 41,275	0
0990	PK-ESCR 968 B REMOVE-SALVAGE TREE 18-24 CLASS 3 - NYC DELIVERY	127.00	EACH	750	0	$ 95,250	0

BID SCHEDULE FORM

COL. 1 SEQ. NO	COL. 2 ITEM NUMBER and DESCRIPTION	COL. 3 ENGINEER'S ESTIMATE OF QUANTITY	COL. 4 UNIT	COL. 5 UNIT PRICE (IN FIGURES) DOLLARS	CTS	COL. 6 EXTENDED AMOUNT (IN FIGURES) DOLLARS	CTS
0991	PK-ESCR 968 C REMOVE-SALVAGE TREE 24-30 CLASS 4 - NYC DELIVERY	127.00	EACH	1,100	0	$ 139,700	0
0992	PK-ESCR 968 D REMOVE-SALVAGE TREE 30+ CLASS 3 - NYC DELIVERY	126.00	EACH	1,400	0	$ 176,400	0
0993	SL-20.01.02 FURNISH AND INSTALL FOUNDATION FOR TYPE "WF" LAMPPOST, AS PER DRAWING E-5124	173.00	EACH	5,400	0	$ 934,200	0
0994	SL-20.02.02 FURNISH AND INSTALL STANDARD TYPE ANCHOR BOLT FOUNDATION, AS PER DRAWING E-3788	15.00	EACH	750	0	$ 11,250	0
0995	SL-20.02.10 FURNISH AND INSTALL STANDARD TYPE ANCHOR BOLT FOUNDATION AS PER DWG J-5253 FOR INSTALLING TYPE "BC", "M", LYRE AND "5TH AVENUE" ,"GCPW", LAMPPOST.	25.00	EACH	750	0	$ 18,750	0
0996	SL-20.07.02 ROTOR FOUNDATION. FURNISH AND INSTALL RIGID CONDUIT BEND, SIZE AS ORDERED.	1.00	EACH	875	0	$ 875	0
0997	SL-20.08.01 REMOVE STANDARD TYPE ANCHOR BOLT CONCRETE FOUNDATION	25.00	EACH	1,100	0	$ 27,500	0
0998	SL-21.01.09 FURNISH AND INSTALL "WF" LAMPPOST WITHOUT TRANSFORMET BASE.	14.00	EACH	2,500	0	$ 35,000	0

BID SCHEDULE FORM

COL. 1 SEQ. NO	COL. 2 ITEM NUMBER and DESCRIPTION	COL. 3 ENGINEER'S ESTIMATE OF QUANTITY	COL. 4 UNIT	COL. 5 UNIT PRICE (IN FIGURES) DOLLARS	CTS	COL. 6 EXTENDED AMOUNT (IN FIGURES) DOLLARS	CTS
0999	SL-21.03.02 FURNISH AND INSTALL TYPE 2S, 4S, 6S, 8S OR 12S LAMPPOST WITH TRANSFORMER BASE	15.00	EACH	2,500	0	$ 37,500	0
1000	SL-21.03.24A FURNISH AND INSTALL TYPE 14' (HIGH) STEEL DAVIT LAMPPOST (SINGLE ARM) AS PER STANDARD DWG J-5308.	15.00	EACH	2,500	0	$ 37,500	0
1001	SL-21.04.14 FURNISH AND INSTALL TYPE "M" LAMPPOST WITH P.E.C. RECEPTACLE, AS PER DRAWING H-5260.	25.00	EACH	10,000	0	$ 250,000	0
1002	SL-21.04.55 FURNISH AND INSTALL TYPE "FLUSHING MEADOWS PARK" LAMPPOST AS PER STD. DWG. H-5305.	159.00	EACH	2,100	0	$ 333,900	0
1003	SL-21.09.05 REMOVE STANDARD FABRICATED STEEL, SPUN ALUMINUM NO. 10, ETC. WITH ARM(S), LUMINAIRE(S), CONTROL(S) WITH ALL ATTACHMENTS, IF ANY.	25.00	EACH	600	0	$ 15,000	0
1004	SL-21.09.06 REMOVE ORNAMENTAL LAMPPOST (TYPE "BC", "M", "F", "5TH AVENUE", "LYRE" GRAND CENTRAL) ON FOUNDATION, WITH ALL ATTACHMENTS, IF ANY. REMOVE PORTION OF FOUNDATION.	25.00	EACH	800	0	$ 20,000	0
1005	SL-22.01.02 FURNISH AND INSTALL TYPE 2085 100 WATT HIGH PRESSURE SODIUM LUMINAIRE WITH 55 VOLT LAMP.	14.00	EACH	1,100	0	$ 15,400	0

BID SCHEDULE FORM

COL. 1 SEQ. NO	COL. 2 ITEM NUMBER and DESCRIPTION	COL. 3 ENGINEER'S ESTIMATE OF QUANTITY	COL. 4 UNIT	COL. 5 UNIT PRICE (IN FIGURES) DOLLARS	CTS	COL. 6 EXTENDED AMOUNT (IN FIGURES) DOLLARS	CTS
1006	SL-22.06.19 FURNISH AND INSTALL MAXIMUM 150 WATT LED TYPE "TEAR DROP" LUMINAIRE	25.00	EACH	1,400	0	$ 35,000	0
1007	SL-22.08.01 INSTALL FLOODLIGHT. LAMP FURNISHED BY CONTRACTOR.	6.00	EACH	250	0	$ 1,500	0
1008	SL-22.15.05 FURNISH AND INSTALL 70 WATT MAX LED "FLUSHING MEADOW PARK" TYPE LUMINAIRE AS PER SPECIFICATION 474	159.00	EACH	1,500	0	$ 238,500	0
1009	SL-22.16.05 FURNISH AND INSTALL ROADWAY TYPE LED FIXTURE AS PER SPECIFICATION 466 WITH PEC RECEPTACLE AND PEC	22.00	EACH	450	0	$ 9,900	0
1010	SL-22.17.03 FURNISH LED FLOODLIGHT	6.00	EACH	1,250	0	$ 7,500	0
1011	SL-24.02.02 FURNISH AND INSTALL FABRICATED STEEL 8 Ft. ARM ON LAMPPOST OR "M-2" TRAFFIC POLE SHAFT EXTENSION.	32.00	EACH	650	0	$ 20,800	0
1012	SL-24.02.09 FURNISH AND INSTALL TROUGH FOR THREE FLOODLIGHTS OR THREE PHOTOELECTRIC CONTROLS, AS PER DRAWING J-5229	7.00	EACH	550	0	$ 3,850	0
1013	SL-26.01.02 REMOVE A PLUG-IN CONTROL, OR SHORTING BRIDGE. INSTALL A PLUG-IN SOLID STATE PHOTOELECTRIC CONTROL	49.00	EACH	125	0	$ 6,125	0

BID SCHEDULE FORM

COL. 1 SEQ. NO	COL. 2 ITEM NUMBER and DESCRIPTION	COL. 3 ENGINEER'S ESTIMATE OF QUANTITY	COL. 4 UNIT	COL. 5 UNIT PRICE (IN FIGURES) DOLLARS	CTS	COL. 6 EXTENDED AMOUNT (IN FIGURES) DOLLARS	CTS
1014	SL-27.01.01 FURNISH AND INSTALL ALUMINUM TAG ON A LAMPPOST, AS PER DRAWING D-2861	323.00	EACH	85	0	$ 27,455	0
1015	SL-28.01.02 FURNISH AND INSTALL COPPER WELD GROUND ROD AND CLAMP IN DIRT AREA, BURIED BOX, SIDEWALK OR ROADWAY BOX, AS PER DRAWING H-5019.	51.00	EACH	350	0	$ 17,850	0
1016	SL-29.01.03 FURNISH, INSTALL, MAINTAIN AND REMOVE EQUIPMENT FOR TEMPORARY LIGHTING, AS PER DRAWING J-5226	75.00	EACH	2,500	0	$ 187,500	0
1017	SL-32.01.03 FURNISH AND INSTALL AN IN-LINE FUSED CONNECTOR KIT.	211.00	EACH	45	0	$ 9,495	0
1018	SL-33.01.02 FURNISH AND INSTALL NO. 6 AWG XLP COPPER CABLE OR EQUAL IN CONDUIT	25,090.00	L.F.	3	50	$ 87,815	0
1019	SL-33.01.03 FURNISH AND INSTALL NO. 2 AWG XLP COPPER CABLE OR EQUAL IN CONDUIT	90,350.00	L.F.	6	0	$ 542,100	0
1020	SL-33.01.04 FURNISH AND INSTALL NO. 2/0 AWG XLP COPPER CABLE OR EQUAL IN CONDUIT	80.00	L.F.	9	50	$ 760	0
1021	SL-33.03.01 FURNISH AND INSTALL #6 BARE COPPER CONDUCTOR IN CONDUIT OR OVERHEAD.	32,620.00	L.F.	3	50	$ 114,170	0

BID SCHEDULE FORM

COL. 1 SEQ. NO	COL. 2 ITEM NUMBER and DESCRIPTION	COL. 3 ENGINEER'S ESTIMATE OF QUANTITY	COL. 4 UNIT	COL. 5 UNIT PRICE (IN FIGURES) DOLLARS	CTS	COL. 6 EXTENDED AMOUNT (IN FIGURES) DOLLARS	CTS
1022	SL-33.03.02 FURNISH AND INSTALL #2 BARE COPPER CONDUCTOR IN CONDIT OR OVERHEAD.	20,700.00	L.F.	6	0	$ 124,200	0
1023	SL-35.01.03 FURNISH AND INSTALL 1-1/2" HOT DIPPED GALVANIZED STEEL CONDUIT IN PAVED AREA.	1,600.00	L.F.	41	0	$ 65,600	0
1024	SL-35.01.04 FURNISH AND INSTALL 2" HOT DIPPED GALVANIZED STEEL CONDUIT IN PAVED AREA	300.00	L.F.	46	0	$ 13,800	0
1025	SL-35.01.05 FURNISH AND INSTALL 3" HOT DIPPED GALVANIZED STEEL CONDUIT IN PAVED AREA.	2,300.00	L.F.	85	0	$ 195,500	0
1026	SL-35.03.03 FURNISH AND INSTALL 1-1/2" HOT DIPPED GALVANIZED STEEL CONDUIT IN UNPAVED AREA	200.00	L.F.	37	0	$ 7,400	0
1027	SL-35.03.04 FURNISH AND INSTALL 2" HOT DIPPED GALVANIZED STEEL CONDUIT IN UNPAVED AREA	2,620.00	L.F.	39	0	$ 102,180	0
1028	SL-35.03.04A FURNISH AND INSTALL 2" HDPE SCHEDULE 80 CONDUIT IN UNPAVED AREA	1,600.00	L.F.	21	0	$ 33,600	0
1029	SL-35.03.05 FURNISH AND INSTALL 3" HOT DIPPED GALVANIZED STEEL CONDUIT IN UNPAVED AREA.	1,560.00	L.F.	37	0	$ 57,720	0

BID SCHEDULE FORM

COL. 1 SEQ. NO	COL. 2 ITEM NUMBER and DESCRIPTION	COL. 3 ENGINEER'S ESTIMATE OF QUANTITY	COL. 4 UNIT	COL. 5 UNIT PRICE (IN FIGURES) DOLLARS	CTS	COL. 6 EXTENDED AMOUNT (IN FIGURES) DOLLARS	CTS
1030	SL-35.09.03 FURNISH AND INSTALL 1-1/2" HOT DIPPED GALVANIZED STEEL CONDUIT ON STRUCTURE.	280.00	L.F.	65	0	$ 18,200	0
1031	SL-35.09.04 FURNISH AND INSTALL 2" HOT DIPPED GALVANIZED STEEL CONDUIT ON STRUCTURE	1,960.00	L.F.	80	0	$ 156,800	0
1032	SL-35.11.01 REMOVE CONDUIT(S) WITH OR WITHOUT CONDUCTORS AND ASSOCIATED EQUIPMENT ON STRUCTORE OR BUILDING.	3,250.00	L.F.	5	0	$ 16,250	0
1033	SL-37.04.04 FURNISH AND INSTALL A CAST IRON BOX UP TO 5184 CUBIC INCHES MAXIMUM MOUNTED ON STRUCTURE.	18.00	EACH	4,100	0	$ 73,800	0
1034	SL-37.05.09 FURNISH AND INSTALL TYPE 2418 ROADWAY CONCRETE BOX WITH CAST IRON FRAME AND COVER WITH TAMPER PROOF BOLTS AS PER DWG J-3179B.	195.00	EACH	2,400	0	$ 468,000	0
1035	SL-37.05.11 FURNISH AND INSTALL TYPE 3624 ROADWAY CONCRETE BOX WITH CAST IRON FRAME AND COVER WITH TAMPER PROOF BOLTS AS PER DWG J-3179B.	1.00	EACH	3,600	0	$ 3,600	0
1036	SL-37.05.12 FURNISH AND INSTALL TYPE 4824 ROADWAY CONCRETE BOX WITH CAST IRON FRAME AND COVER WITH TAMPER PROOF BOLTS AS PER DWG J-3179B.	31.00	EACH	4,300	0	$ 133,300	0

BID SCHEDULE FORM

COL. 1 SEQ. NO	COL. 2 ITEM NUMBER and DESCRIPTION	COL. 3 ENGINEER'S ESTIMATE OF QUANTITY	COL. 4 UNIT	COL. 5 UNIT PRICE (IN FIGURES) DOLLARS	CTS	COL. 6 EXTENDED AMOUNT (IN FIGURES) DOLLARS	CTS
1037	SL-38.03.02 FURNISH AND INSTALL FLUSH MOUNTED OR PEDESTAL MOUNTED SIX (6) RELAY CONTROL CABINET AS PER DWGS H-3441, H-5078, H- 5222A.	3.00	EACH	16,000	0	$ 48,000	0
1038	T-1.20 REMOVE TYPE "M" SERIES FOUNDATION	1.00	EACH	1,500	0	$ 1,500	0
1039	T-1.3 INSTALL TYPE "M2-5S" FOUNDATION	1.00	EACH	750	0	$ 750	0
1040	T-2.24 REMOVE TYPE "M" SERIES POST	1.00	EACH	1,200	0	$ 1,200	0
1041	T-2.27 REMOVE ANY OTHER TYPE POST	2.00	EACH	800	0	$ 1,600	0
1042	T-2.4 INSTALL TYPE "M-2" POST	1.00	EACH	1,700	0	$ 1,700	0
1043	T-20160 FURNISH 20 FOOT SIGNAL MAST ARM POLE ASSEMBLY TYPE "M-2"	1.00	EACH	4,200	0	$ 4,200	0
1044	T-20184 a) FURNISH 5' EXTENSION ARM ASSEMBLY WITH FITTINGS	4.00	EACH	500	0	$ 2,000	0

BID SCHEDULE FORM

COL. 1 SEQ. NO	COL. 2 ITEM NUMBER and DESCRIPTION	COL. 3 ENGINEER'S ESTIMATE OF QUANTITY	COL. 4 UNIT	COL. 5 UNIT PRICE (IN FIGURES) DOLLARS	CTS	COL. 6 EXTENDED AMOUNT (IN FIGURES) DOLLARS	CTS
1045	T-20220 c) FURNISH 1-1/4" ANCHOR BOLT ASSEMBLIES FOR M-2 (EACH) (4 REQUIRED PER POST)	4.00	EACH	75	0	$ 300	0
1046	T-3.1 INSTALL "ONE-WAY" SIGNAL UNIT ON MAST ARM OR TOP OF TRAFFIC POST	2.00	EACH	450	0	$ 900	0
1047	T-3.18 REMOVE SIGNAL HEAD FROM ANY TYPE POST	2.00	EACH	425	0	$ 850	0
1048	T-3.2 INSTALL "ONE-WAY" SIGNAL UNIT ON THE SHAFT OF ANY POST	1.00	EACH	425	0	$ 425	0
1049	T-3.21 REMOVE PEDESTRIAN SIGNAL OR SIGN UNIT OR OTHER ILLUMINATED SIGNS FROM ANY POST	6.00	EACH	425	0	$ 2,550	0
1050	T-3.6 INSTALL PEDESTRIAN SIGNAL ON ANY TYPE POST	3.00	EACH	425	0	$ 1,275	0
1051	T-30013L FURNISH ADJUSTABLE 3 SECTION 1-WAY, DIE CAST ALUMINUM TRAFFIC SIGNALS 8" - W/LED LENS	3.00	EACH	425	0	$ 1,275	0
1052	T-31200 e) "VB" ASSEMBLY *ASSEMBLY IS EQUAL TO ONE PAIR	1.00	EACH	75	0	$ 75	0

BID SCHEDULE FORM

COL. 1 SEQ. NO	COL. 2 ITEM NUMBER and DESCRIPTION	COL. 3 ENGINEER'S ESTIMATE OF QUANTITY	COL. 4 UNIT	COL. 5 UNIT PRICE (IN FIGURES) DOLLARS	CTS	COL. 6 EXTENDED AMOUNT (IN FIGURES) DOLLARS	CTS
1053	T-31205 FURNISH MAST ARM SIGNAL MOUNTING ASSEMBLY - a) "1MS"	2.00	EACH	75	0	$ 150	0
1054	T-31210 h) "HUB" ASSEMBLY *ASSEMBLY IS EQUAL TO ONE PAIR	2.00	EACH	45	0	$ 90	0
1055	T-31215 b) "2MS"	1.00	EACH	250	0	$ 250	0
1056	T-31351 g) "VB-2P" ASSEMBLY *ASSEMBLY IS EQUAL TO ONE PAIR	1.00	EACH	250	0	$ 250	0
1057	T-33001-L FURNISH POLYCARBONATE PEDESTRIAN SIGNAL (16 X 16) W/LED COUNT LENS (SPECIFICATION A-L)	2.00	EACH	425	0	$ 850	0
1058	T-4.22 INSTALL ANY TYPE OF ADVANCED SOLID STATE TRAFFIC SIGNAL CONTROLLER AND CABINET ON METAL POLE	1.00	EACH	2,500	0	$ 2,500	0
1059	T-4.8 REMOVE ONE CONTROL BOX AND CONTROLLER FROM ANY POST OR SUPPORT	1.00	EACH	2,000	0	$ 2,000	0
1060	T-5.4 FURNISH AND INSTALL 3" RIGID UNDERGROUND CONDUIT IN UNPAVED ROADWAY	40.00	L.F.	100	0	$ 4,000	0

BID SCHEDULE FORM

COL. 1 SEQ. NO	COL. 2 ITEM NUMBER and DESCRIPTION	COL. 3 ENGINEER'S ESTIMATE OF QUANTITY	COL. 4 UNIT	COL. 5 UNIT PRICE (IN FIGURES) DOLLARS	CTS	COL. 6 EXTENDED AMOUNT (IN FIGURES) DOLLARS	CTS
1061	T-5.49 FURNISH AND INSTALL ADDITIONAL 2" HDPE CONDUIT	40.00	L.F.	25	0	$ 1,000	0
1062	T-5.50 FURNISH AND INSTALL 2" HDPE UNDERGROUND CONDUIT IN PAVED ROADWAY	90.00	L.F.	75	0	$ 6,750	0
1063	T-5.54 PERMANENT RESTORATION OF PAVED ROADWAY	130.00	L.F.	150	0	$ 19,500	0
1064	T-6.1 INSTALL CABLE (INCLUDES OVERHEAD)	300.00	L.F.	5	0	$ 1,500	0
1065	T-6.10 REMOVE CABLE (INCLUDES OVERHEAD)	500.00	L.F.	5	0	$ 2,500	0
1066	T-6.2 INSTALL MULTIPLE CABLE (INCLUDES OVERHEAD)	500.00	L.F.	7	0	$ 3,500	0
1067	T-60000B FURNISH 2 c # 10B (BREAKDOWN = 2#10 WITH 3RD WIRE FOR GROUNDING).	400.00	L.F.	2	0	$ 800	0
1068	T-60040 c) 7 CONDUCTOR, 14 A.W.G.	300.00	L.F.	2	0	$ 600	0

BID SCHEDULE FORM

COL. 1 SEQ. NO	COL. 2 ITEM NUMBER and DESCRIPTION	COL. 3 ENGINEER'S ESTIMATE OF QUANTITY	COL. 4 UNIT	COL. 5 UNIT PRICE (IN FIGURES) DOLLARS	CTS	COL. 6 EXTENDED AMOUNT (IN FIGURES) DOLLARS	CTS
1069	T-60190 e) 13 CONDUCTOR, 14 A.W.G.	500.00	L.F.	2	0	$ 1,000	0
1070	T-8.8 INSTALL CONCRETE PYLON	2.00	EACH	1,300	0	$ 2,600	0
1071	T-8.9 REMOVE CONCRETE PYLON	2.00	EACH	800	0	$ 1,600	0
1072	T-81000 FURNISH CONCRETE PYLON	2.00	EACH	750	0	$ 1,500	0
1073	UTL-6.01.3 (CE) GAS MAIN CROSSING SEWER 36" THRU 42" IN DIAMETER (S6.01) **Unit price bid shall not be less than: $ 2,040.00**	2.00	EACH	2,500	0	$ 5,000	0
1074	UTL-6.02 (CE) EXTRA EXCAVATION FOR THE INSTALLATION OF CATCH BASIN SEWER DRAIN PIPES WITH GAS INTERFERENCES (S6.02) **Unit price bid shall not be less than: $ 715.00**	2.00	EACH	800	0	$ 1,600	0
1075	UTL-6.03 (CE) REMOVAL OF ABANDONED GAS FACILITIES. ALL SIZES. (S6.03) **Unit price bid shall not be less than: $ 15.00**	870.00	L.F.	25	0	$ 21,750	0

BID SCHEDULE FORM

COL. 1 SEQ. NO	COL. 2 ITEM NUMBER and DESCRIPTION	COL. 3 ENGINEER'S ESTIMATE OF QUANTITY	COL. 4 UNIT	COL. 5 UNIT PRICE (IN FIGURES)		COL. 6 EXTENDED AMOUNT (IN FIGURES)	
				DOLLARS	CTS	DOLLARS	CTS
1076	UTL-6.03.1A (CE) REMOVAL OF ABANDONED GAS FACILITIES WITH POSSIBLE COAL TAR WRAP. ALL SIZES. (FOR CON EDISON WORK ONLY) (S6.03) Unit price bid shall not be less than: $ 25.00	150.00	L.F.	25	0	$ 3,750	0
1077	UTL-6.04 (CE) ADJUST HARDWARE TO GRADE USING SPACER RINGS/ADAPTORS. (STREET REPAVING.) (S6.04) Unit price bid shall not be less than: $ 35.00	10.00	EACH	75	0	$ 750	0
1078	UTL-6.05 (CE) ADJUST HARDWARE TO GRADE BY RESETTING. (ROAD RECONSTRUCTION.) (S6.05) Unit price bid shall not be less than: $ 65.00	10.00	EACH	150	0	$ 1,500	0
1079	UTL-6.06 (CE) SPECIAL CARE EXCAVATION AND BACKFILLING (S6.06) Unit price bid shall not be less than: $ 180.00	230.00	C.Y.	180	0	$ 41,400	0
1080	UTL-6.07 (CE) TEST PITS FOR GAS FACILITIES (S6.07) Unit price bid shall not be less than: $ 100.00	100.00	C.Y.	250	0	$ 25,000	0
1081	UTL-6.08A (CE) PIER AND/OR PLATE METHOD OF PROTECTION FOR DUCTILE IRON WATER MAIN WITH LESS THAN 24" COVER (S6.08A) Unit price bid shall not be less than: $ 5,800.00	1.00	EACH	17,000	0	$ 17,000	0

BID SCHEDULE FORM

COL. 1 SEQ. NO	COL. 2 ITEM NUMBER and DESCRIPTION	COL. 3 ENGINEER'S ESTIMATE OF QUANTITY	COL. 4 UNIT	COL. 5 UNIT PRICE (IN FIGURES) DOLLARS	CTS	COL. 6 EXTENDED AMOUNT (IN FIGURES) DOLLARS	CTS
1082	UTL-6.09A (CE) TRENCH EXCAVATION AND BACKFILL FOR GAS MAINS AND SERVICES. GAS INSTALLED BY OTHERS (FOR CON EDISON WORK ONLY). (S6.09) Unit price bid shall not be less than: $ 190.00	776.00	C.Y.	350	0	$ 271,600	0
1083	UTL-GCS-2WS (CE) GAS INTERFERENCES AND ACCOMMODATIONS PRICE BID SHALL BE FOR THE FIXED SUM OF $ 100,000.00	1.00	F.S.	100,000	0	$ 100,000	0

SUB-TOTAL: $ 1,178,221,100.00

1084	6.39 B MOBILIZATION BID PRICE OF MOBILIZATION SHALL NOT EXCEED 8% OF THE ABOVE SUB-TOTAL PRICE.	1.00	L.S.	94,000,000	0	$ 94,000,000	0

TOTAL BID PRICE: $ 1,272,221,100.00

PLEASE BE SURE A LEGIBLE BID IS ENTERED FOR EACH ITEM.
THE BIDDER SHALL INSERT THE TOTAL BID PRICE IN
THE BID FORM IN THIS BID BOOKLET.

C. DRAWINGS

Contract Drawings

DWG NO.	SHEET TITLE
G001	TITLE SHEET
G002	KEY MAP SHEET 1 OF 2
G003	KEY MAP SHEET 2 OF 2
G004	TABLE OF CONTENTS SHEET 1 OF 15
G005	TABLE OF CONTENTS SHEET 2 OF 15
G006	TABLE OF CONTENTS SHEET 3 OF 15
G007	TABLE OF CONTENTS SHEET 4 OF 15
G008	TABLE OF CONTENTS SHEET 5 OF 15
G009	TABLE OF CONTENTS SHEET 6 OF 15
G010	TABLE OF CONTENTS SHEET 7 OF 15
G011	TABLE OF CONTENTS SHEET 8 OF 15
G012	TABLE OF CONTENTS SHEET 9 OF 15
G013	TABLE OF CONTENTS SHEET 10 OF 15
G014	TABLE OF CONTENTS SHEET 11 OF 15
G015	TABLE OF CONTENTS SHEET 12 OF 15
G016	TABLE OF CONTENTS SHEET 13 OF 15
G017	TABLE OF CONTENTS SHEET 14 OF 15
G018	TABLE OF CONTENTS SHEET 15 OF 15
G019	LEGENDS AND ABBREVIATIONS SHEET 1 OF 2
G020	LEGENDS AND ABBREVIATIONS SHEET 2 OF 2
G021	GENERAL NOTES SHEET 1 OF 3
G022	GENERAL NOTES SHEET 2 OF 3
G023	GENERAL NOTES SHEET 3 OF 3
G024	RECORD OF BORINGS SCHEDULE
G025	RECORD OF BORINGS LOCATION PLAN REACH A & REACH B
G026	RECORD OF BORINGS LOCATION PLAN REACH C & REACH D
G027	RECORD OF BORINGS LOCATION PLAN REACH E & REACH F
G028	RECORD OF BORINGS LOCATION PLAN REACH G & REACH H
G029	RECORD OF BORINGS LOCATION PLAN REACH I, REACH J & REACH K
ESC100	EROSION AND SEDIMENT CONTROL - KEY MAP
ESC101	EROSION AND SEDIMENT CONTROL - GENERAL NOTES

DWG NO.	SHEET TITLE
ESC102	EROSION AND SEDIMENT CONTROL PLANS - REACH A AND REACH B - PHASE 1A AND 1B
ESC103	EROSION AND SEDIMENT CONTROL PLANS - REACH A AND REACH B - PHASE 1C AND 1D
ESC104	EROSION AND SEDIMENT CONTROL PLANS - REACH C, REACH D, REACH E1 - PHASE 1A
ESC105	EROSION AND SEDIMENT CONTROL PLANS - REACH C, REACH D, REACH E1 - PHASE 1B
ESC106	EROSION AND SEDIMENT CONTROL PLANS - REACH C, REACH D, REACH E1 - PHASE 1C
ESC107	EROSION AND SEDIMENT CONTROL PLANS - REACH C, REACH D, REACH E1 - PHASE 1D
ESC108	EROSION AND SEDIMENT CONTROL PLANS - REACH C AND REACH D - PHASE 2A AND 2B
ESC109	EROSION AND SEDIMENT CONTROL PLANS - REACH C AND REACH D - PHASE 2C AND 2D
ESC110	EROSION AND SEDIMENT CONTROL PLANS - REACH E2, REACH F, REACH G - PHASE 2A
ESC111	EROSION AND SEDIMENT CONTROL PLANS - REACH E2, REACH F, REACH G - PHASE 2B
ESC112	EROSION AND SEDIMENT CONTROL PLANS - REACH E2, REACH F, REACH G - PHASE 2C
ESC113	EROSION AND SEDIMENT CONTROL PLANS - REACH E2, REACH F, REACH G - PHASE 2D
ESC114	EROSION AND SEDIMENT CONTROL PLANS - REACH G, REACH H, REACH I - PHASE 1A
ESC115	EROSION AND SEDIMENT CONTROL PLANS - REACH G, REACH H, REACH I - PHASE 1B
ESC116	EROSION AND SEDIMENT CONTROL PLANS - REACH G, REACH H, REACH I - PHASE 1C
ESC117	EROSION AND SEDIMENT CONTROL PLANS - REACH G, REACH H, REACH I - PHASE 1D
ESC118	EROSION AND SEDIMENT CONTROL PLANS - REACH I AND REACH J - PHASE 2A AND 2B
ESC119	EROSION AND SEDIMENT CONTROL PLANS - REACH I AND REACH J - PHASE 2C AND 2D
ESC120	EROSION AND SEDIMENT CONTROL PLANS - REACH K - PHASE 2A
ESC121	EROSION AND SEDIMENT CONTROL PLANS - REACH K - PHASE 2B
ESC122	EROSION AND SEDIMENT CONTROL PLANS - CORLEARS HOOK PARK - PHASE 1A AND 1B

DWG NO.	SHEET TITLE
ESC123	EROSION AND SEDIMENT CONTROL PLANS - CORLEARS HOOK PARK - PHASE 1C
ESC124	EROSION AND SEDIMENT CONTROL PLANS - EAST 10TH STREET - PHASE 2A AND 2B
ESC141	EROSION AND SEDIMENT CONTROL DETAILS SHEET 1 OF 3
ESC142	EROSION AND SEDIMENT CONTROL DETAILS SHEET 2 OF 3
ESC143	EROSION AND SEDIMENT CONTROL DETAILS SHEET 3 OF 3
ESC144	SHEET INTENTIONALLY LEFT BLANK
ESC145	SHEET INTENTIONALLY LEFT BLANK
ESC146	SHEET INTENTIONALLY LEFT BLANK
ESC147	SHEET INTENTIONALLY LEFT BLANK
ESC148	SHEET INTENTIONALLY LEFT BLANK
ESC149	SHEET INTENTIONALLY LEFT BLANK
ESC150	SHEET INTENTIONALLY LEFT BLANK
ESC151	SHEET INTENTIONALLY LEFT BLANK
ESC152	SHEET INTENTIONALLY LEFT BLANK
ESC153	SHEET INTENTIONALLY LEFT BLANK
ESC154	SHEET INTENTIONALLY LEFT BLANK
ESC155	SHEET INTENTIONALLY LEFT BLANK
SM000	EARTHWORK SETTLEMENT TABLE OF CONTENTS
SM302	EARTHWORK SETTLEMENT MITIGATION PLAN REACH C
SM303	EARTHWORK SETTLEMENT MITIGATION PLAN REACH D
SM304	EARTHWORK SETTLEMENT MITIGATION PLAN REACH E
SM305	EARTHWORK SETTLEMENT MITIGATION PLAN REACH F
SM306	EARTHWORK SETTLEMENT MITIGATION PLAN REACH G
SM307	EARTHWORK SETTLEMENT MITIGATION PLAN REACH H
SM308	EARTHWORK SETTLEMENT MITIGATION PLAN REACH I
SM309	EARTHWORK SETTLEMENT MITIGATION PLAN REACH J
SM310	EARTHWORK SETTLEMENT MITIGATION DETAILS SECTIONS
SM311	PRE-LOAD GRADING PLAN REACH E
SM312	PRE-LOAD GRADING PLAN REACH F
SM313	PRE-LOAD GRADING PLAN REACH G
SM314	PRE-LOAD GRADING PLAN REACH H
SM315	PRE-LOAD SECTIONS REACH E
SM316	PRE-LOAD SECTIONS REACH F
SM317	PRE-LOAD SECTIONS REACH G

DWG NO.	SHEET TITLE
SM318	PRE-LOAD SECTIONS REACH H
SM350	PILE SUPPORTED FILL FOUNDATION PLAN SHEET 1 OF 8
SM351	PILE SUPPORTED FILL FOUNDATION PLAN SHEET 2 OF 8
SM352	PILE SUPPORTED FILL FOUNDATION PLAN SHEET 3 OF 8
SM353	PILE SUPPORTED FILL FOUNDATION PLAN SHEET 4 OF 8
SM354	PILE SUPPORTED FILL FOUNDATION PLAN SHEET 5 OF 8
SM355	PILE SUPPORTED FILL FOUNDATION PLAN SHEET 6 OF 8
SM356	PILE SUPPORTED FILL FOUNDATION PLAN SHEET 7 OF 8
SM357	PILE SUPPORTED FILL FOUNDATION PLAN SHEET 8 OF 8
SM358	PILE SUPPORTED FILL SECTIONS SHEET 1 OF 3
SM359	PILE SUPPORTED FILL SECTIONS SHEET 2 OF 3
SM360	PILE SUPPORTED FILL SECTIONS SHEET 3 OF 3
SM361	PILE SUPPORTED FILL STRUCTURAL DETAILS SHEET 1 OF 4
SM362	PILE SUPPORTED FILL STRUCTURAL DETAILS SHEET 2 OF 4
SM363	PILE SUPPORTED FILL STRUCTURAL DETAILS SHEET 3 OF 4
SM364	PILE SUPPORTED FILL STRUCTURAL DETAILS SHEET 4 OF 4
BC000	CORLEARS HOOK BRIDGE TABLE OF CONTENTS
BC001	CORLEARS HOOK BRIDGE GENERAL NOTES SHEET 1 OF 2
BC002	CORLEARS HOOK BRIDGE GENERAL NOTES SHEET 2 OF 2
BC003	CORLEARS HOOK BRIDGE ARCHITECTUAL GENERAL NOTES
BC004	CORLEARS HOOK BRIDGE LOCATION PLAN
BC100	CORLEARS HOOK BRIDGE EXISTING GENERAL PLAN AND ELEVATION
BC101	CORLEARS HOOK BRIDGE DEMOLITION PLAN AND SECTION 1 OF 2
BC101A	CORLEARS HOOK BRIDGE DEMOLITION PLAN AND SECTION 2 OF 2
BC102	CORLEARS HOOK BRIDGE SITE DEMOLITION - GENERAL NOTES
BC103	CORLEARS HOOK BRIDGE SITE DEMOLITION PLAN
BC104	CORLEARS HOOK BRIDGE TREE REMOVALS AND PROTECTION PLAN
BC105	CORLEARS HOOK BRIDGE PARK DRAINAGE & SANITARY DEMOLITION PLAN
BC106	CORLEARS HOOK BRIDGE GENERAL PLAN AND ELEVATION
BC107	CORLEARS HOOK BRIDGE TYPICAL SECTIONS
BC108	CORLEARS HOOK BRIDGE RECORD OF BORINGS SHEET 1 OF 2
BC109	CORLEARS HOOK BRIDGE RECORD OF BORINGS SHEET 2 OF 2
BC110	CORLEARS HOOK BRIDGE EXCAVATION SUPPORT AND PROTECTION SYSTEM PLAN

DWG NO.	SHEET TITLE
BC111	CORLEARS HOOK BRIDGE EXCAVATION SUPPORT AND PROTECTION SYSTEM SECTIONS
BC112	CORLEARS HOOK BRIDGE FOUNDATION PLAN
BC113	CORLEARS HOOK BRIDGE WEST ABUTMENT PLAN AND ELEVATION FOR WINGWALL STRUCTURE
BC114	CORLEARS HOOK BRIDGE EAST ABUTMENT PLAN AND ELEVATION FOR WINGWALL STRUCTURE
BC115	CORLEARS HOOK BRIDGE WEST ABUTMENT AND WINGWALLS PILE LAYOUT
BC116	CORLEARS HOOK BRIDGE EAST ABUTMENT AND WINGWALLS PILE LAYOUT
BC117	CORLEARS HOOK BRIDGE REINFORCEMENT PLANS FOR WEST ABUTMENT, FOOTING, BACKWALL AND WINGWALLS
BC118	CORLEARS HOOK BRIDGE REINFORCEMENT PLANS FOR EAST ABUTMENT, FOOTING, BACKWALL AND WINGWALLS
BC119	CORLEARS HOOK BRIDGE EAST & WEST ABUTMENT AND WINGWALL SECTIONS
BC119A	RETAINING WALL FOUNDATION ELEVATION AT CORLEARS HOOK PARK
BC120	CORLEARS HOOK BRIDGE DECK REINFORCEMENT PLAN
BC121	CORLEARS HOOK BRIDGE EAST PARAPET TRANSITION
BC122	CORLEARS HOOK BRIDGE MISCELLANEOUS CONCRETE DETAILS
BC123	CORLEARS HOOK BRIDGE STEEL PILE TABLE AND DETAILS 1 OF 2
BC124	CORLEARS HOOK BRIDGE STEEL PILE TABLE AND DETAILS 2 OF 2
BC125	CORLEARS HOOK BRIDGE BEARINGS
BC126	CORLEARS HOOK BRIDGE DECK FRAMING AND ARCH BRACING PLAN
BC127	CORLEARS HOOK BRIDGE ELEVATION
BC128	CORLEARS HOOK BRIDGE FRAMING DETAILS 1 OF 2
BC129	CORLEARS HOOK BRIDGE FRAMING DETAILS 2 OF 2
BC130	CORLEARS HOOK BRIDGE ARCH RIB BRACING DETAILS
BC131	CORLEARS HOOK BRIDGE MISCELLANEOUS STEEL DETAILS 1 OF 2
BC132	CORLEARS HOOK BRIDGE MISCELLANEOUS STEEL DETAILS 2 OF 2
BC133	CORLEARS HOOK BRIDGE REINFORCEMENT SPLICING DETAILS 1 OF 3
BC134	CORLEARS HOOK BRIDGE REINFORCEMENT SPLICING DETAILS 2 OF 3
BC135	CORLEARS HOOK BRIDGE REINFORCEMENT SPLICING DETAILS 3 OF 3
BC136	CORLEARS HOOK BRIDGE ARCH HANGER DETAILS 1 OF 2
BC137	CORLEARS HOOK BRIDGE ARCH HANGER DETAILS 2 OF 2
BC138	CORLEARS HOOK BRIDGE STRESS (MOMENT AND SHEAR) TABLES

DWG NO.	SHEET TITLE
BC139	CORLEARS HOOK BRIDGE DECK PLAN
BC140	CORLEARS HOOK BRIDGE DECK SECTIONS
BC141	CORLEARS HOOK BRIDGE LONGITUDINAL SECTION
BC142	CORLEARS HOOK BRIDGE JOINT DETAILS
BC143	CORLEARS HOOK BRIDGE MISCELLANEOUS DETAILS
BC144	CORLEARS HOOK BRIDGE ARCH GEOMETRY
BC145	CORLEARS HOOK BRIDGE BIKE AND HAND RAIL DETAIL 1 OF 2
BC145A	CORLEARS HOOK BRIDGE BIKE AND HAND RAIL DETAIL 2 OF 2
BC145B	DELANCEY BRIDGE RAILING DETAILS
BC145C	EAST 10TH STREET BRIDGE RAILING DETAILS
BC145D	CORLEARS HOOK BRIDGE RAILING DETAILS
BC146	CORLEARS HOOK BRIDGE FENCE AND CONNECTION DETAIL
BC147	CORLEARS HOOK BRIDGE TGL & PROFILE
BC148	CORLEARS HOOK BRIDGE CAMBER/DEFLECTION TABLE
BC149	CORLEARS HOOK BRIDGE APPROACH SLAB DETAILS
BC150	CORLEARS HOOK BRIDGE LIGHT POLE BASE ANCHORING DETAIL
BC151	CORLEARS HOOK BRIDGE PLAN
BC152	CORLEARS HOOK BRIDGE NORTH & SOUTH ELEVATIONS
BC153	CORLEARS HOOK BRIDGE LONGITUDINAL SECTION
BC154	CORLEARS HOOK BRIDGE CROSS SECTIONS
BC155	CORLEARS HOOK BRIDGE ARCHITECTUAL CONCRETE FINISH & UNROLLED ELEVATIONS
BC156	CORLEARS HOOK BRIDGE BRIDGE DESIGN OVERVIEW
BC157	CORLEARS HOOK BRIDGE - BRIDGE RAIL DETAILS
BC158	CORLEARS HOOK BRIDGE - RAIL TRANSITION DETAILS
BC159	CORLEARS HOOK BRIDGE - RAMP RAIL DETAILS
BC160	CORLEARS HOOK BRIDGE - DETAILS
BC161	CORLEARS HOOK BRIDGE - CONCRETE DETERRENT FURNITURE
BC162	CORLEARS HOOK BRIDGE ARCHITECTUAL CONCRETE FINISH PATTERN MODULE TYPES
BC163	CORLEARS HOOK BRIDGE ARCHITECTUAL CONCRETE FINISH PATTERN PROFILE TYPES
BC164	CORLEARS HOOK BRIDGE ARCHITECTUAL CONCRETE FINISH PATTERN DETAILS
BC164A	CORLEARS HOOK BRIDGE ARCHITECTUAL CONCRETE FINISH PATTERN PATTERN ABUTMENT

DWG NO.	SHEET TITLE
BC164B	CORLEARS HOOK BRIDGE ARCHITECTUAL CONCRETE PATTERN PATTERN DETAILS
BC165	CORLEARS HOOK BRIDGE SITE GRADING PLAN
BC166	CORLEARS HOOK BRIDGE SITE LAYOUT PLAN
BC166A	CORLEARS HOOK BRIDGE SITE LAYOUT ENLARGEMENT REACH BC-1
BC166B	CORLEARS HOOK BRIDGE SITE LAYOUT ENLARGEMENT REACH BC-2
BC166C	CORLEARS HOOK BRIDGE SITE LAYOUT ENLARGEMENT REACH BC-3
BC166D	CORLEARS HOOK BRIDGE SITE LAYOUT ENLARGEMENT REACH BC-4
BC166E	CORLEARS HOOK BRIDGE SITE LAYOUT ENLARGEMENT REACH BC-5
BC167	CORLEARS HOOK BRIDGE PARK DRAINAGE & SANITARY SCHEDULES
BC168	CORLEARS HOOK BRIDGE PARK DRAINAGE & SANITARY PLAN
BC169	CORLEARS HOOK BRIDGE PARK DRAINAGE & SANITARY PROFILE
BC170	CORLEARS HOOK BRIDGE PARK DRAINAGE & SANITARY DETAILS
BC171	CORLEARS HOOK BRIDGE MATERIALS PLAN
BC172	CORLEARS HOOK BRIDGE FURNISHING PLAN
BC173	CORLEARS HOOK BRIDGE CURB, WALL, AND FENCE PLAN
BC174	CORLEARS HOOK BRIDGE PAVEMENT MARKING PLAN
BC175	CORLEARS HOOK BRIDGE PLANTING SCHEDULE
BC176	CORLEARS HOOK BRIDGE SOILS PLAN
BC177	CORLEARS HOOK BRIDGE SOIL PROFILES
BC177B	CORLEARS HOOK BRIDGE SOIL AND PLANTING DETAILS
BC177C	CORLEARS HOOK BRIDGE SOIL AND PLANTING DETAILS
BC178	CORLEARS HOOK BRIDGE PLANTING PLAN
BC178A	CORLEARS HOOK BRIDGE PLANTING ENLARGEMENT REACH BC-1
BC178B	CORLEARS HOOK BRIDGE PLANTING ENLARGEMENT REACH BC-2
BC178C	CORLEARS HOOK BRIDGE PLANTING ENLARGEMENT REACH BC-3
BC178D	CORLEARS HOOK BRIDGE PLANTING ENLARGEMENT REACH BC-4
BC178E	CORLEARS HOOK BRIDGE PLANTING ENLARGEMENT REACH BC-5
BC178F	CORLEARS HOOK BRIDGE TREE LAYOUT PLAN
BC178G	CORLEARS HOOK BRIDGE TREE LAYOUT SCHEDULE
BC179	CORLEARS HOOK BRIDGE TREE MITIGATION SCHEDULE SHEET 1 OF 3
BC180	CORLEARS HOOK BRIDGE TREE MITIGATION SCHEDULE SHEET 2 OF 3
BC181	CORLEARS HOOK BRIDGE TREE MITIGATION SCHEDULE SHEET 3 OF 3

DWG NO.	SHEET TITLE
BC182	CORLEARS HOOK BRIDGE DETAIL NOTES
BC183	CORLEARS HOOK BRIDGE STONE
BC184	CORLEARS HOOK BRIDGE STAIRS
BC185	CORLEARS HOOK BRIDGE STAIRS, RAILINGS AND FURNISHING DETAILS
BC186	CORLEARS HOOK BRIDGE FURNISHING AND AMENITIES
BC186B	CORLEARS HOOK BRIDGE BRIDGE PAVING DETAILS
BC187	CORLEARS HOOK BRIDGE SOIL AND PLANTING DETAILS
BC188	CORLEARS HOOK BRIDGE LEFT BLANK
BC189	CORLEARS HOOK BRIDGE SITE ELECTRICAL GENERAL NOTES, LEGEND AND ABBREVIATIONS
BC190	CORLEARS HOOK BRIDGE LIGHTING PLAN
BD000	DELANCEY STREET BRIDGE TABLE OF CONTENTS
BD001	DELANCEY STREET BRIDGE GENERAL NOTES SHEET 1 OF 2
BD002	DELANCEY STREET BRIDGE GENERAL NOTES SHEET2 OF 2
BD003	DELANCEY STREET BRIDGE ARCHITECTUAL GENERAL NOTES
BD004	DELANCEY STREET BRIDGE LOCATION PLAN
BD100	DELANCEY STREET BRIDGE EXISTING PLAN AND ELEVATION
BD101	DELANCEY STREET BRIDGE DEMOLITION PLAN AND SECTIONS
BD102	DELANCEY STREET BRIDGE TREE REMOVALS AND PROTECTION PLAN
BD102A	DELANCEY STREET BRIDGE TREE MITIGATION SCHEDULE SHEET 1 OF 3
BD102B	DELANCEY STREET BRIDGE TREE MITIGATION SCHEDULE SHEET 2 OF 3
BD102C	DELANCEY STREET BRIDGE TREE MITIGATION SCHEDULE SHEET 3 OF 3
BD103	DELANCEY STREET BRIDGE ELECTRICAL DEMOLITION PLAN
BD104	DELANCEY STREET BRIDGE GENERAL PLAN AND ELEVATION
BD105	DELANCEY STREET BRIDGE TYPICAL SECTIONS
BD106	DELANCEY STREET BRIDGE BORING PLAN
BD107	DELANCEY STREET BRIDGE BORING LOGS SHEET 1 OF 3
BD108	DELANCEY STREET BRIDGE BORING LOGS SHEET 2 OF 3
BD109	DELANCEY STREET BRIDGE BORING LOGS SHEET 3 OF 3
BD110	DELANCEY STREET EXCAVATION SUPPORT AND PROTECTION SYSTEM PLAN
BD111	DELANCEY STREET EXCAVATION SUPPORT AND PROTECTION SYSTEM SECTIONS

DWG NO.	SHEET TITLE
BD112	DELANCEY STREET BRIDGE LEFT BLANK
BD113	DELANCEY STREET BRIDGE FOUNDATION PLAN
BD114	DELANCEY STREET BRIDGE GRADING PLAN 1 OF 2
BD115	DELANCEY STREET BRIDGE GRADING PLAN 2 OF 2
BD116	DELANCEY STREET BRIDGE WEST ABUTMENT PLAN AND ELEVATION
BD117	DELANCEY STREET BRIDGE WEST ABUTMENT DETAILS 1 OF 2
BD118	DELANCEY STREET BRIDGE WEST ABUTMENT DETAILS 2 OF 2
BD119	DELANCEY STREET BRIDGE WEST RAMP PILE PLAN
BD120	DELANCEY STREET BRIDGE WEST RAMP ELEVATIONS
BD121	DELANCEY STREET BRIDGE WEST RAMP FOOTING REINFORCEMENT PLAN
BD122	DELANCEY STREET BRIDGE WEST RAMP WALL AND DECK SECTION REINFORCEMENT
BD123	DELANCEY STREET BRIDGE WEST RAMP WALL REINFORCEMENT PLAN
BD124	DELANCEY STREET BRIDGE PIER 1 PLAN AND ELEVATION
BD125	DELANCEY STREET BRIDGE PIER 1 FOOTING PILE AND REINFORCEMENT PLAN
BD126	DELANCEY STREET BRIDGE PIER 1 REINFORCEMENT DETAILS
BD127	DELANCEY STREET BRIDGE PIER 2 PLAN AND ELEVATION
BD128	DELANCEY STREET BRIDGE PIER 2 FOOTING PILE AND REINFORCEMENT PLAN
BD129	DELANCEY STREET BRIDGE PIER 2 REINFORCEMENT DETAILS
BD130	DELANCEY STREET BRIDGE EAST ABUTMENT PLAN AND ELEVATION
BD131	DELANCEY STREET BRIDGE EAST ABUTMENT REINFORCEMENT DETAILS
BD132	DELANCEY STREET BRIDGE EAST ABUTMENT WINGWALL DETAILS
BD133	DELANCEY STREET BRIDGE EAST RAMP FOOTING PILE AND REINFORCEMENT PLAN
BD134	DELANCEY STREET BRIDGE EAST RAMP WALL ELEVATIONS AND REINFORCEMENT
BD135	DELANCEY STREET BRIDGE EAST RAMP REINFORCEMENT DETAILS
BD136	DELANCEY STREET BRIDGE WEST RAMP DECK REINFORCEMENT PLAN
BD137	DELANCEY STREET BRIDGE SPANS 1, 2 AND EAST RAMP DECK REINFORCEMENT PLAN
BD138	DELANCEY STREET BRIDGE SPAN AND RAMP - PARAPET DETAILS
BD139	DELANCEY STREET BRIDGE SPAN 1 AND SPAN 2 E.L. BEARINGS

DWG NO.	SHEET TITLE
BD140	DELANCEY STREET BRIDGE MISCELLANEOUS CONCRETE DETAILS
BD141	DELANCEY STREET BRIDGE STEEL PILE DETAILS
BD142	DELANCEY STREET BRIDGE MICROPILE NOTES
BD143	DELANCEY STREET BRIDGE MICROPILE DETAILS
BD144	DELANCEY STREET BRIDGE PILE TABLE
BD145	DELANCEY STREET BRIDGE SUBSTRUCTURE MISCELLANEOUS DETAILS
BD146	DELANCEY STREET BRIDGE BOLLARD DETAILS
BD147	DELANCEY STREET BRIDGE REMOVABLE BOLLARD DETAILS AND PART LIST
BD148	DELANCEY STREET BRIDGE WEST RAMP WALL A REINFORCEMENT DETAILS
BD149	DELANCEY STREET BRIDGE WEST RAMP WALL B REINFORCEMENT DETAILS
BD150	DELANCEY STREET BRIDGE WEST RAMP WALL REINFORCEMENT DETAILS
BD151	DELANCEY STREET BRIDGE LEFT BLANK
BD152	DELANCEY STREET BRIDGE ARCH M.R. BEARINGS
BD153	DELANCEY STREET BRIDGE SPAN 3 FRAMING PLAN
BD154	DELANCEY STREET BRIDGE ARCH ELEVATION
BD155	DELANCEY STREET BRIDGE TYPICAL BRIDGE SECTIONS
BD156	DELANCEY STREET BRIDGE FRAMING DETAILS
BD157	DELANCEY STREET BRIDGE ARCH RIB BRACE DETAILS
BD158	DELANCEY STREET BRIDGE MISCELLANEOUS STEEL DETAILS
BD159	DELANCEY STREET BRIDGE SPLICE DETAILS 1 OF 2
BD160	DELANCEY STREET BRIDGE SPLICE DETAILS 2 OF 2
BD161	DELANCEY STREET BRIDGE ARCH HANGER DETAILS
BD162	DELANCEY STREET BRIDGE ACCESS HOLE DETAILS
BD163	DELANCEY STREET BRIDGE STRESS TABLES
BD164	DELANCEY STREET BRIDGE SPAN 3 DECK PLAN
BD165	DELANCEY STREET BRIDGE SPAN 3 DECK SECTIONS
BD166	DELANCEY STREET BRIDGE CAMBER TABLE
BD167	DELANCEY STREET BRIDGE ARCH RIB GEOMETRY
BD168	DELANCEY STREET BRIDGE STAIRCASE PLAN AND ELEVATION
BD169	DELANCEY STREET BRIDGE STAIRCASE REINFORCEMENT DETAILS 1 OF 2

DWG NO.	SHEET TITLE
BD170	DELANCEY STREET BRIDGE STAIRCASE REINFORCEMENT DETAILS 2 OF 2
BD171	DELANCEY STREET BRIDGE JOINT DETAILS
BD172	DELANCEY STREET BRIDGE TYPICAL CONCRETE DETAILS
BD173	DELANCEY STREET BRIDGE LEFT BLANK
BD174	DELANCEY STREET BRIDGE LEFT BLANK
BD175	DELANCEY STREET BRIDGE LEFT BLANK
BD176	DELANCEY STREET BRIDGE PROFILE
BD177	DELANCEY STREET BRIDGE LEFT BLANK
BD178	DELANCEY STREET BRIDGE LEFT BLANK
BD179	DELANCEY STREET BRIDGE LEFT BLANK
BD180	DELANCEY STREET BRIDGE LEFT BLANK
BD181	DELANCEY STREET BRIDGE PLAN
BD182	DELANCEY STREET BRIDGE RAMP PLAN (UPPER LEVEL)
BD183	DELANCEY STREET BRIDGE RAMP PLAN (GROUND LEVEL)
BD184	DELANCEY STREET BRIDGE NORTH & SOUTH ELEVATIONS
BD185	DELANCEY STREET BRIDGE RAMP NORTH ELEVATION
BD186	DELANCEY STREET BRIDGE RAMP SOUTH ELEVATION
BD187	DELANCEY STREET BRIDGE BRIDGE LONGITUDINAL SECTION
BD188	DELANCEY STREET BRIDGE CROSS SECTIONS
BD189	DELANCEY STREET BRIDGE ARCHITECTUAL CONCRETE FINISH & UNROLLED ELEVATIONS
BD190	DELANCEY STREET BRIDGE ARCHITECTUAL CONCRETE FINISH & UNROLLED ELEVATIONS
BD191	DELANCEY STREET BRIDGE ENLARGED STAIR PLAN & SECTION
BD192	DELANCEY STREET BRIDGE BRIDGE DESIGN OVERVIEW
BD193	DELANCEY STREET BRIDGE - BRIDGE RAIL DETAILS
BD194	DELANCEY STREET BRIDGE - RAIL TRANSITION DETAILS
BD195	DELANCEY STREET BRIDGE - RAMP RAIL DETAILS
BD196	DELANCEY STREET BRIDGE - RAMP RAIL DETAILS
BD197	DELANCEY STREET BRIDGE STAIR HANDRAIL DETAILS
BD198	DELANCEY STREET BRIDGE ARCHITECTUAL CONCRETE FINISH PATTERN MODULE TYPES
BD199	DELANCEY STREET BRIDGE ARCHITECTUAL CONCRETE FINISH PATTERN PROFILE TYPES
BD200	DELANCEY STREET BRIDGE ARCHITECTUAL CONCRETE FINISH PATTERN DETAILS

DWG NO.	SHEET TITLE
BD201	DELANCEY STREET BRIDGE ARCHITECTUAL CONCRETE PATTERN PATTERN ABUTMENT
BD201A	DELANCEY STREET BRIDGE ARCHITECTUAL CONCRETE PATTERN DETAILS
BD202	DELANCEY STREET BRIDGE HIGHWAY CONSTRUCTION TYPICAL SECTIONS
BD203	DELANCEY STREET BRIDGE HIGHWAY CONSTRUCTION LAYOUT PLAN
BD204	DELANCEY STREET BRIDGE HIGHWAY CONSTRUCTION GRADING PLAN
BD205	DELANCEY STREET BRIDGE HIGHWAY CONSTRUCTION PROFILE
BD206	DELANCEY STREET BRIDGE UTILITY PLAN & PROFILE
BD207	DELANCEY STREET BRIDGE PAVEMENT MARKING PLAN
BD208	DELANCEY STREET BRIDGE HIGHWAY CONSTRUCTION DETAILS
BD209	DELANCEY STREET BRIDGE HIGHWAY CONSTRUCTION DETAILS
BD210	DELANCEY STREET BRIDGE HIGHWAY CONSTRUCTION DETAILS
BD211	DELANCEY STREET BRIDGE HIGHWAY CONSTRUCTION DETAILS
BD212	DELANCEY STREET BRIDGE HIGHWAY CONSTRUCTION DETAILS
BD213	DELANCEY STREET BRIDGE SITE ELECTRICAL GENERAL NOTES, LEGEND AND ABBREVIATIONS
BD214	DELANCEY STREET BRIDGE LIGHTING PLAN
BD215	DELANCEY STREET BRIDGE STREET LIGHTING PLAN
BT000	EAST 10TH STREET BRIDGE TABLE OF CONTENTS
BT001	EAST 10TH STREET BRIDGE GENERAL NOTES SHEET 1 OF 2
BT002	EAST 10TH STREET BRIDGE GENERAL NOTES SHEET 1 OF 2
BT003	EAST 10TH STREET BRIDGE ARCHITECTUAL GENERAL NOTES
BT004	EAST 10TH STREET BRIDGE LOCATION PLAN
BT100	EAST 10TH STREET BRIDGE EXISTING PLAN AND ELEVATION
BT101	EAST 10TH STREET BRIDGE DEMOLITION PLAN AND SECTIONS
BT102	EAST 10TH STREET BRIDGE TREE REMOVALS AND PROTECTION PLAN
BT103A	EAST 10TH STREET BRIDGE ELECTRICAL DEMOLITION PLAN
BT103	EAST 10TH STREET EXISTING ELECTRICAL WIRING DIAGRAM
BT104	EAST 10TH STREET BRIDGE GENERAL PLAN AND ELEVATION
BT105	EAST 10TH STREET BRIDGE TYPICAL SECTIONS
BT106	EAST 10TH STREET BRIDGE BORING PLAN
BT107	EAST 10TH STREET BRIDGE BORING LOGS SHEET 1 OF 3
BT108	EAST 10TH STREET BRIDGE BORING LOGS SHEET 2 OF 3
BT109	EAST 10TH STREET BRIDGE BORING LOGS SHEET 3 OF 3

DWG NO.	SHEET TITLE
BT110	EAST 10TH STREET BRIDGE EXCAVATION SUPPORT AND PROTECTION SYSTEM PLAN
BT111	EAST 10TH STREET BRIDGE EXCAVATION SUPPORT AND PROTECTION SYSTEM SECTIONS
BT112	EAST 10TH STREET BRIDGE FOUNDATION PLAN
BT113	EAST 10TH STREET GRADING PLAN 1 OF 2
BT114	EAST 10TH STREET GRADING PLAN 2 OF 2
BT115	EAST 10TH STREET BRIDGE WEST ABUTMENT PLAN AND ELEVATION
BT116	EAST 10TH STREET BRIDGE WEST ABUTMENT FOOTING PILE AND REINFORCEMENT PLAN
BT117	EAST 10TH STREET BRIDGE WEST ABUTMENT WINGWALL DETAILS
BT118	EAST 10TH STREET BRIDGE WEST RAMP FOOTING PILE PLAN
BT119	EAST 10TH STREET BRIDGE WEST RAMP WALL ELEVATIONS SHEET 1 OF 2
BT120	EAST 10TH STREET BRIDGE WEST RAMP WALL ELEVATIONS SHEET 2 OF 2
BT121	EAST 10TH STREET BRIDGE WEST RAMP FOOTING REINFORCEMENT PLAN
BT122	EAST 10TH STREET BRIDGE WEST RAMP WALL SECTION REINFORCEMENT
BT123	EAST 10TH STREET BRIDGE WEST RAMP WALL REINFORCEMENT PLAN
BT124	EAST 10TH STREET BRIDGE EAST ABUTMENT PLAN AND ELEVATION
BT125	EAST 10TH STREET BRIDGE EAST ABUTMENT FOOTING PILE AND REINFORCEMENT PLAN
BT126	EAST 10TH STREET BRIDGE EAST ABUTMENT EAST RAMP WALL REINFORCEMENT DETAILS
BT127	EAST 10TH STREET BRIDGE EAST ABUTMENT WINGWALL AND EAST RAMP WALL DETAILS
BT128	EAST 10TH STREET BRIDGE WEST RAMP DECK REINFORCEMENT PLAN 1 OF 2
BT129	EAST 10TH STREET BRIDGE WEST RAMP DECK REINFORCEMENT PLAN 2 OF 2
BT130	EAST 10TH STREET BRIDGE EAST RAMP FOOTING, WALL AND DECK REINFORCEMENT PLAN
BT131	EAST 10TH STREET BRIDGE WEST RAMP PARAPET TRANSITION DETAIL
BT132	EAST 10TH STREET BRIDGE MISCELLANEOUS CONCRETE DETAILS
BT133	EAST 10TH STREET BRIDGE STEEL PILE DETAILS

DWG NO.	SHEET TITLE
BT134	EAST 10TH STREET BRIDGE PILE TABLE
BT135	EAST 10TH STREET BRIDGE SUBSTRUCTURE MISCELLANEOUS DETAILS
BT136	EAST 10TH STREET BRIDGE BOLLARD DETAILS
BT137	EAST 10TH STREET BRIDGE REMOVABLE BOLLARD DETAILS AND PART LIST
BT138	EAST 10TH STREET BRIDGE WEST RAMP WALL REINFORCEMENT DETAILS 1 OF 2
BT139	EAST 10TH STREET BRIDGE WEST RAMP WALL REINFORCEMENT DETAILS 2 OF 2
BT140	EAST 10TH STREET BRIDGE LEFT BLANK
BT141	EAST 10TH STREET BRIDGE ARCH M.R. BEARINGS
BT142	EAST 10TH STREET BRIDGE SPAN 1 FRAMING PLAN
BT143	EAST 10TH STREET BRIDGE ARCH ELEVATION
BT144	EAST 10TH STREET BRIDGE TYPICAL BRIDGE SECTIONS
BT145	EAST 10TH STREET BRIDGE FRAMING DETAILS
BT146	EAST 10TH STREET BRIDGE ARCH RIB BRACE DETAILS
BT147	EAST 10TH STREET BRIDGE MISCELLANEOUS STEEL DETAILS
BT148	EAST 10TH STREET BRIDGE SPLICE DETAILS 1 OF 2
BT149	EAST 10TH STREET BRIDGE SPLICE DETAILS 2 OF 2
BT150	EAST 10TH STREET BRIDGE ARCH HANGER DETAILS
BT151	EAST 10TH STREET BRIDGE ACCESS HOLE DETAILS
BT152	EAST 10TH STREET BRIDGE STRESS TABLES
BT153	EAST 10TH STREET BRIDGE SPAN 1 DECK PLAN
BT154	EAST 10TH STREET BRIDGE SPAN 1 DECK SECTIONS
BT155	EAST 10TH STREET BRIDGE CAMBER TABLES
BT156	EAST 10TH STREET BRIDGE ARCH RIB GEOMETRY
BT157	EAST 10TH STREET BRIDGE STAIRCASE PLAN AND ELEVATION
BT158	EAST 10TH STREET BRIDGE STAIRCASE REINFORCEMENT DETAILS 1 OF 2
BT159	EAST 10TH STREET BRIDGE STAIRCASE REINFORCEMENT DETAILS 2 OF 2
BT160	EAST 10TH STREET BRIDGE JOINT DETAILS
BT161	EAST 10TH STREET BRIDGE TYPICAL CONCRETE DETAILS 1 OF 2
BT162	EAST 10TH STREET BRIDGE TYPICAL CONCRETE DETAILS 2 OF 2
BT163	EAST 10TH STREET BRIDGE LEFT BLANK
BT164	EAST 10TH STREET BRIDGE TRENCH DRAIN DETAILS

DWG NO.	SHEET TITLE
BT165	EAST 10TH STREET BRIDGE PROFILE
BT166	EAST 10TH STREET BRIDGE LEFT BLANK
BT167	EAST 10TH STREET BRIDGE LEFT BLANK
BT168	EAST 10TH STREET BRIDGE LEFT BLANK
BT169	EAST 10TH STREET BRIDGE LEFT BLANK
BT170	EAST 10TH STREET BRIDGE PLAN
BT171	EAST 10TH STREET BRIDGE RAMP PLAN
BT172	EAST 10TH STREET BRIDGE NORTH & SOUTH ELEVATIONS
BT173	EAST 10TH STREET BRIDGE RAMP NORTH & SOUTH ELEVATIONS
BT174	EAST 10TH STREET BRIDGE BRIDGE LONGITUDINAL SECTION
BT175	EAST 10TH STREET BRIDGE CROSS SECTIONS
BT176	EAST 10TH STREET BRIDGE ARCHITECTUAL CONCRETE & UNROLLED ELEVATIONS
BT177	EAST 10TH STREET BRIDGE ARCHITECTUAL CONCRETE & ABUTMENT ELEVATIONS
BT178	EAST 10TH STREET BRIDGE ENLARGED STAIR PLAN
BT179	EAST 10TH STREET BRIDGE ENLARGED STAIR SECTION
BT180	EAST 10TH STREET BRIDGE BRIDGE DESIGN OVERVIEW
BT181	EAST 10TH STREET BRIDGE - BRIDGE RAIL DETAILS
BT182	EAST 10TH STREET BRIDGE - RAIL TRANSITION DETAILS
BT183	EAST 10TH STREET BRIDGE - RAMP RAIL DETAILS
BT184	EAST 10TH STREET BRIDGE - RAMP RAIL DETAILS
BT185	EAST 10TH STREET BRIDGE STAIR HANDRAIL DETAILS
BT186	EAST 10TH STREET BRIDGE DOOR DETAILS
BT187	EAST 10TH STREET BRIDGE ARCHITECTUAL CONCRETE FINISH PATTERN MODULE TYPES
BT188	EAST 10TH STREET BRIDGE ARCHITECTUAL CONCRETE FINISH PATTERN PROFILE TYPES
BT189	EAST 10TH STREET BRIDGE ARCHITECTUAL CONCRETE PATTERN PATTERN DETAILS
BT190	EAST 10TH STREET BRIDGE ARCHITECTUAL CONCRETE PATTERN PATTERN ABUTMENT
BT190A	EAST 10TH STREET BRIDGE ARCHITECTUAL CONCRETE PATTERN PATTERN DETAILS
BT191	EAST 10TH STREET BRIDGE HIGHWAY CONSTRUCTION TYPICAL SECTIONS
BT192	EAST 10TH STREET BRIDGE HIGHWAY CONSTRUCTION LAYOUT PLAN

DWG NO.	SHEET TITLE
BT193	EAST 10TH STREET BRIDGE HIGHWAY CONSTRUCTION GRADING PLAN
BT194	EAST 10TH STREET BRIDGE HIGHWAY CONSTRUCTION PROFILE
BT195	EAST 10TH STREET BRIDGE UTILITY PLAN & PROFILE
BT196	EAST 10TH STREET BRIDGE UTILITY PLAN & PROFILE TYPICAL SECTION
BT197	EAST 10TH STREET BRIDGE PAVEMENT MARKING PLAN
BT198	EAST 10TH STREET BRIDGE HIGHWAY CONSTRUCTION DETAILS
BT199	EAST 10TH STREET BRIDGE HIGHWAY CONSTRUCTION DETAILS
BT200	EAST 10TH STREET BRIDGE HIGHWAY CONSTRUCTION DETAILS
BT201	EAST 10TH STREET BRIDGE HIGHWAY CONSTRUCTION DETAILS
BT202	EAST 10TH STREET BRIDGE HIGHWAY CONSTRUCTION DETAILS
BT203	EAST 10TH STREET BRIDGE CHAMBER 10A PLAN & SECTION
BT204	EAST 10TH STREET BRIDGE CHAMBER 10B PLAN & SECTION
BT205	EAST 10TH STREET BRIDGE MISCELLANEOUS CHAMBER DETAILS
BT206	EAST 10TH STREET BRIDGE STREET LIGHTING PLAN
BT207	EAST 10TH STREET BRIDGE SOILS PLAN
BT208	EAST 10TH STREET BRIDGE PLANTING PLAN
BT209	EAST 10TH STREET BRIDGE ENLARGEMENTS
BT210	EAST 10TH STREET BRIDGE DETAILS
BT210A	EAST 10TH STREET BRIDGE TREE MITIGATION SCHEDULE SHEET 1 OF 2
BT210B	EAST 10TH STREET BRIDGE TREE MITIGATION SCHEDULE SHEET 2 OF 2
BT211	EAST 10TH STREET BRIDGE SITE ELECTRICAL GENERAL NOTES, LEGEND AND ABBREVIATIONS
BT212	EAST 10TH STREET BRIDGE LIGHTING PLAN
BT213	EAST 10TH STREET BRIDGE STORAGE ROOM LIGHTING PLAN
PCC001	CIVIL GENERAL NOTES
PCC306	PARALLEL CONVEYANCE BRANCH INTERCEPTOR REPLACEMENT CIVIL PLAN & PROFILE EAST 10TH STREET
PCC350	PARALLEL CONVEYANCE EAST 10TH STREET PARTIAL PLAN
PCC351	PARALLEL CONVEYANCE EAST 10TH STREET SECTIONS AND DETAILS
S001	STRUCTURAL GENERAL NOTES SHEET 1 OF 2
S002	STRUCTURAL GENERAL NOTES SHEET 2 OF 2

DWG NO.	SHEET TITLE
PCS420	PARALLEL CONVEYANCE - STRUCTURAL MODIFIED EXISTING INTERCEPTOR SEWER MANHOLE NO. 2 M-33, M-34, M-3 DROP STRUCTURE - DEMOLITION PLANS AND SECTIONS
PCS421	PARALLEL CONVEYANCE - STRUCTURAL MODIFIED EXISTING INTERCEPTOR SEWER MANHOLE NO. 2 M-33, M-34, M-35 DROP STRUCTURE - PLANS SHEET 1 OF 2
PCS422	PARALLEL CONVEYANCE - STRUCTURAL MODIFIED EXISTING INTERCEPTOR SEWER MANHOLE NO. 2 M-33, M-34, M-35 DROP STRUCTURE - PLANS SHEET 2 OF 2
PCS620	PARALLEL CONVEYANCE - STRUCTURAL MODIFIED EXISTING INTERCEPTOR SEWER MANHOLE NO. 2 M-33, M-34, M-35 DROP STRUCTURE - SECTIONS
PCS720	PARALLEL CONVEYANCE - STRUCTURAL MODIFIED EXISTING INTERCEPTOR SEWER MANHOLE NO. 2 M-33, M-34, M-35 DROP STRUCTURE - DETAILS
PCS423	PARALLEL CONVEYANCE - STRUCTURAL CHAMBER NO. 1 - PLANS
PCS623	PARALLEL CONVEYANCE - STRUCTURAL CHAMBER NO. 1 - SECTIONS
S700	STRUCTURAL DETAILS SHEET 1 OF 3
S701	STRUCTURAL DETAILS SHEET 2 OF 3
S702	STRUCTURAL DETAILS SHEET 3 OF 3
PCS304	LAUNCHING AND RECEIVING PITS PLAN VIEW
PCS304A	LAUNCHING AND RECEIVING PITS NOTES PAGE
PCS304B	LAUNCHING AND RECEIVING PITS DETAILS PAGE
PCS304C	LAUNCHING PIT CONSTRUCTION SEQUENCE SHEET 1 OF 2
PCS304D	LAUNCHING PIT CONSTRUCTION SEQUENCE SHEET 2 OF 2
PCS304E	RECEIVING PIT CONSTRUCTION SEQUENCE SHEET 1 OF 2
PCS304F	RECEIVING PIT CONSTRUCTION SEQUENCE SHEET 2 OF 2
PCH306	PARALLEL CONVEYANCE HIGHWAY CONSTRUCTION
PCH307	PARALLEL CONVEYANCE HIGHWAY CONSTRUCTION
PCH308	PARALLEL CONVEYANCE HIGHWAY CONSTRUCTION
PCH309	PARALLEL CONVEYANCE HIGHWAY CONSTRUCTION
PCH310	PARALLEL CONVEYANCE HIGHWAY CONSTRUCTION
BH000	HOUSTON STREET BRIDGE TABLE OF CONTENTS
BH001	HOUSTON STREET BRIDGE GENERAL NOTES
BH100	HOUSTON STREET BRIDGE EXISTING PLAN AND ELEVATION
BH101	HOUSTON STREET BRIDGE GENERAL PLAN AND ELEVATION
BH102	HOUSTON STREET BRIDGE TYPICAL SECTIONS SHEET 1 OF 2
BH103	HOUSTON STREET BRIDGE TYPICAL SECTIONS SHEET 2 OF 2

DWG NO.	SHEET TITLE
BH104	HOUSTON STREET BRIDGE BORING PLAN
BH105	HOUSTON STREET BRIDGE BORING LOGS SHEET 1 OF 4
BH106	HOUSTON STREET BRIDGE BORING LOGS SHEET 2 OF 4
BH107	HOUSTON STREET BRIDGE BORING LOGS SHEET 3 OF 4
BH108	HOUSTON STREET BRIDGE BORING LOGS SHEET 4 OF 4
BH109	HOUSTON STREET BRIDGE EXCAVATION SUPPORT AND PROTECTION SYSTEM PLAN
BH110	HOUSTON STREET BRIDGE EXCAVATION SUPPORT AND PROTECTION SYSTEM SECTIONS
BH111	HOUSTON STREET BRIDGE FOUNDATION PLAN
BH112	HOUSTON STREET BRIDGE RETAINING WALL ELEVATION AND FOOTING PLAN SHEET 1 OF 5
BH113	HOUSTON STREET BRIDGE RETAINING WALL ELEVATION AND FOOTING PLAN SHEET 2 OF 5
BH114	HOUSTON STREET BRIDGE RETAINING WALL ELEVATION AND FOOTING PLAN SHEET 3 OF 5
BH115	HOUSTON STREET BRIDGE RETAINING WALL ELEVATION AND FOOTING PLAN SHEET 4 OF 5
BH116	HOUSTON STREET BRIDGE RETAINING WALL ELEVATION AND FOOTING PLAN SHEET 5 OF 5
BH117	HOUSTON STREET BRIDGE RETAINING WALL REINFORCEMENT SECTIONS
BH118	HOUSTON STREET BRIDGE RETAINING WALL REINFORCEMENT DETAILS SHEET 1 OF 4
BH119	HOUSTON STREET BRIDGE RETAINING WALL REINFORCEMENT DETAILS SHEET 2 OF 4
BH120	HOUSTON STREET BRIDGE RETAINING WALL REINFORCEMENT DETAILS SHEET 3 OF 4
BH121	HOUSTON STREET BRIDGE RETAINING WALL REINFORCEMENT DETAILS SHEET 4 OF 4
BH122	HOUSTON STREET BRIDGE RETAINING WALL H-PILE DETAILS
BH123	HOUSTON STREET BRIDGE RETAINING WALL MICROPILE NOTES
BH124	HOUSTON STREET BRIDGE RETAINING WALL MICROPILE DETAILS
BH125	HOUSTON STREET BRIDGE RETAINING WALL TABLE 1 OF 3
BH126	HOUSTON STREET BRIDGE RETAINING WALL TABLE 2 OF 3
BH127	HOUSTON STREET BRIDGE RETAINING WALL TABLE 3 OF 3
BH128	HOUSTON STREET BRIDGE PROFILE 1 OF 2
BH129	HOUSTON STREET BRIDGE PROFILE 2 OF 2

DWG NO.	SHEET TITLE
BH130	HOUSTON STREET BRIDGE CONCRETE REPAIR AND MISCELLANOUS DETAILS
BH131	HOUSTON STREET BRIDGE ALIGNMENT DATA 1 OF 2
BH132	HOUSTON STREET BRIDGE ALIGNMENT DATA 2 OF 2
BH133	HOUSTON STREET BRIDGE LEFT BLANK
BH134	HOUSTON STREET BRIDGE LEFT BLANK
BH135	HOUSTON STREET BRIDGE LEFT BLANK
F000	FLOOD PROTECTION TABLE OF CONTENTS
F000A	FLOOD PROTECTION TABLE OF CONTENTS
F001	FLOOD PROTECTION GENERAL NOTES
F002	FLOOD PROTECTION GENERAL NOTES
F003	FLOOD PROTECTION GENERAL NOTES
F004	FLOOD PROTECTION ALIGNMENT STATIONING SHEET 1 OF 3
F005	FLOOD PROTECTION ALIGNMENT STATIONING SHEET 2 OF 3
F006	FLOOD PROTECTION ALIGNMENT STATIONING SHEET 3 OF 3
F010	MTA GENERAL NOTES
F011	MTA GENERAL NOTES
F015	MTA WILLIAMSBURG BRIDGE WATERFRONT - LOCATION PLAN
F016	MTA WILLIAMSBURG BRIDGE WATERFRONT - DEMOLITION PLAN
F017	MTA WILLIAMSBURG BRIDGE WATERFRONT - CONSTRUCTION PLAN
F018	MTA WILLIAMSBURG BRIDGE WATERFRONT - DEMOLITION SECTION
F019	MTA WILLIAMSBURG BRIDGE WATERFRONT - PROPOSED SECTION
F020	MTA CANARSIE TUBES CROSSING - LOCATION PLAN
F021	MTA CANARSIE TUBES CROSSING - PARTIAL PLAN
F022	MTA CANARSIE TUBES CROSSING - ELEVATION
F023	MTA CANARSIE TUBES CROSSING - SECTIONS
F024	MTA CANARSIE TUBES CROSSING - RECOMMENDED CONSTRUCTION MEANS AND METHODS
F100	FLOOD PROTECTION DEMOLITION PLAN SEGMENT 1 - REACH A STA. 9+07 - 16+91
F101	FLOOD PROTECTION DEMOLITION PLAN SEGMENT 1 - REACH B STA. 16+91 - 23+82
F102	FLOOD PROTECTION DEMOLITION PLAN SEGMENT 1 - REACH C STA. 23+82 - 30+44
F103	FLOOD PROTECTION DEMOLITION PLAN SEGMENT 1 - REACH D STA. 30+44 - 39+99

DWG NO.	SHEET TITLE
F104	FLOOD PROTECTION DEMOLITION PLAN SEGMENT 1 - REACH E STA. 39+99 - 49+94
F105	FLOOD PROTECTION DEMOLITION PLAN SEGMENT 2 - REACH F STA. 49+94 - 58+67
F106	FLOOD PROTECTION DEMOLITION PLAN SEGMENT 2 - REACH G STA. 58+67 - 69+33
F107	FLOOD PROTECTION DEMOLITION PLAN SEGMENT 2 - REACH H STA. 69+33 - 77+58
F108	FLOOD PROTECTION DEMOLITION PLAN SEGMENT 3 - REACH I STA. 77+58 - 86+64
F109	FLOOD PROTECTION DEMOLITION PLAN SEGMENT 3 - REACH J STA. 86+64 - 96+28
F110	FLOOD PROTECTION DEMOLITION PLAN SEGMENT 3 - REACH K STA. 96+28 - 102+34
F120	FLOOD PROTECTION DEMOLITION TYPICAL SECTION 1 OF 4
F121	FLOOD PROTECTION DEMOLITION TYPICAL SECTION 2 OF 4
F122	FLOOD PROTECTION DEMOLITION TYPICAL SECTION 3 OF 4
F123	FLOOD PROTECTION DEMOLITION TYPICAL SECTION 4 OF 4
F124	TROLLEY TRACK DEMOLITION SHEET 1 OF 4
F125	TROLLEY TRACK DEMOLITION SHEET 2 OF 4
F126	TROLLEY TRACK DEMOLITION SHEET 3 OF 4
F127	TROLLEY TRACK DEMOLITION SHEET 4 OF 4
F300	FLOODWALL STRUCTURAL PLAN SEGMENT 1 - REACH A STA. 9+07 - 16+91
F301	FLOODWALL STRUCTURAL PLAN SEGMENT 1 - REACH B STA. 16+91 - 23+82
F302	FLOODWALL STRUCTURAL PLAN SEGMENT 1 - REACH C STA. 23+82 - 30+44
F303	FLOODWALL STRUCTURAL PLAN SEGMENT 1 - REACH D STA. 30+44 - 39+99
F304	FLOODWALL STRUCTURAL PLAN SEGMENT 1 - REACH E STA. 39+99 - 49+94
F305	FLOODWALL STRUCTURAL PLAN SEGMENT 2 - REACH F STA. 49+94 - 58+67
F306	FLOODWALL STRUCTURAL PLAN SEGMENT 2 - REACH G STA. 58+67 - 69+33
F307	FLOODWALL STRUCTURAL PLAN SEGMENT 2 - REACH H STA. 69+33 - 77+58

DWG NO.	SHEET TITLE
F308	FLOODWALL STRUCTURAL PLAN SEGMENT 3 - REACH I STA. 77+58 - 86+64
F309	FLOODWALL STRUCTURAL PLAN SEGMENT 3 - REACH J STA. 86+64 - 96+28
F310	FLOODWALL STRUCTURAL PLAN SEGMENT 3 - REACH K STA. 96+28 - 102+34
F400	FLOOD PROTECTION PROFILE SEGMENT 1 - REACH A STA. 9+07 - 16+91
F401	FLOOD PROTECTION PROFILE SEGMENT 1 - REACH B STA. 16+91 - 23+82
F402	FLOOD PROTECTION PROFILE SEGMENT 1 - REACH C STA. 23+82 - 30+44
F403	FLOOD PROTECTION PROFILE SEGMENT 1 - REACH D STA. 30+44 - 39+99
F404	FLOOD PROTECTION PROFILE SEGMENT 1 - REACH E STA. 39+99 - 49+94
F405	FLOOD PROTECTION PROFILE SEGMENT 2 - REACH F STA. 49+94 - 58+67
F406	FLOOD PROTECTION PROFILE SEGMENT 2 - REACH G STA. 58+67 - 69+33
F407	FLOOD PROTECTION PROFILE SEGMENT 2 - REACH H STA. 69+33 - 77+58
F408	FLOOD PROTECTION PROFILE SEGMENT 3 - REACH I STA. 77+58 - 86+64
F409	FLOOD PROTECTION PROFILE SEGMENT 3 - REACH J STA. 86+64 - 96+28
F410	FLOOD PROTECTION PROFILE SEGMENT 3 - REACH K STA. 96+28 - 102+34
F600	FLOOD PROTECTION CROSS SECTIONS REACH A
F601	FLOOD PROTECTION CROSS SECTIONS REACH B
F602	FLOOD PROTECTION CROSS SECTIONS REACH C
F603	FLOOD PROTECTION CROSS SECTIONS REACH D
F610	FLOOD PROTECTION CROSS SECTIONS REACH J-K
F700	UTILITY CROSSINGS TYPE A
F701	UTILITY CROSSINGS TYPE B
F702	UTILITY CROSSINGS TYPE C
F703	UTILITY CROSSINGS TYPE D
F704	UTILITY CROSSINGS TYPE E
F705	UTILITY CROSSINGS TYPE F

DWG NO.	SHEET TITLE
F706	UTILITY CROSSINGS TYPE G
F707	UTILITY CROSSINGS TYPE H
F710	UTILITY CROSSING SCHEDULE SHEET 1 OF 2
F711	UTILITY CROSSING SCHEDULE SHEET 2 OF 2
F715	CON EDISON TIE IN DETAILS
F850	TRANSITION 1 REACH B - OVERALL PLAN
F851	TRANSITION 1 REACH B - SECTIONS PLAN SHEET 1 OF 2
F852	TRANSITION 1 REACH B - SECTIONS PLAN SHEET 2 OF 2
F855	TRANSITION 2 REACH B - OVERALL PLAN
F856	TRANSITION 2 REACH B - SECTIONS PLAN SHEET 1 OF 2
F857	TRANSITION 2 REACH B - SECTIONS PLAN SHEET 2 OF 2
F880	CONVEYOR B TUNNEL CROSSING - PLAN, SECTIONS AND DETAILS
F881	CONVEYOR B TUNNEL CROSSING - PLAN, SECTIONS AND DETAILS
F882	CONVEYOR B TUNNEL CROSSING - PLAN, SECTIONS AND DETAILS
F885	CONVEYOR B TUNNEL CROSSING - PLAN, SECTIONS AND DETAILS
F886	CANARSIE TUNNEL CROSSING - PLAN, SECTIONS AND DETAILS
F887	CANARSIE TUNNEL CROSSING - PLAN, SECTIONS AND DETAILS
B-F-001	RECORD OF BORINGS - FLOOD PROTECTION BORINGS - SHEET 1 OF 21
B-F-002	RECORD OF BORINGS - FLOOD PROTECTION BORINGS - SHEET 2 OF 21
B-F-003	RECORD OF BORINGS - FLOOD PROTECTION BORINGS - SHEET 3 OF 21
B-F-004	RECORD OF BORINGS - FLOOD PROTECTION BORINGS - SHEET 4 OF 21
B-F-005	RECORD OF BORINGS - FLOOD PROTECTION BORINGS - SHEET 5 OF 21
B-F-006	RECORD OF BORINGS - FLOOD PROTECTION BORINGS - SHEET 6 OF 21
B-F-007	RECORD OF BORINGS - FLOOD PROTECTION BORINGS - SHEET 7 OF 21
B-F-008	RECORD OF BORINGS - FLOOD PROTECTION BORINGS - SHEET 8 OF 21
B-F-009	RECORD OF BORINGS - FLOOD PROTECTION BORINGS - SHEET 9 OF 21
B-F-010	RECORD OF BORINGS - FLOOD PROTECTION BORINGS - SHEET 10 OF 21

DWG NO.	SHEET TITLE
B-F-011	RECORD OF BORINGS - FLOOD PROTECTION BORINGS - SHEET 11 OF 21
B-F-012	RECORD OF BORINGS - FLOOD PROTECTION BORINGS - SHEET 12 OF 21
B-F-013	RECORD OF BORINGS - FLOOD PROTECTION BORINGS - SHEET 13 OF 21
B-F-014	RECORD OF BORINGS - FLOOD PROTECTION BORINGS - SHEET 14 OF 21
B-F-015	RECORD OF BORINGS - FLOOD PROTECTION BORINGS - SHEET 15 OF 21
B-F-016	RECORD OF BORINGS - FLOOD PROTECTION BORINGS - SHEET 16 OF 21
B-F-017	RECORD OF BORINGS - FLOOD PROTECTION BORINGS - SHEET 17 OF 21
B-F-018	RECORD OF BORINGS - FLOOD PROTECTION BORINGS - SHEET 18 OF 21
B-F-019	RECORD OF BORINGS - FLOOD PROTECTION BORINGS - SHEET 19 OF 21
B-F-020	RECORD OF BORINGS - FLOOD PROTECTION BORINGS - SHEET 20 OF 21
B-F-021	RECORD OF BORINGS - FLOOD PROTECTION BORINGS - SHEET 21 OF 21
FW001	FORM-LINED WALLS PA1 KEY PLAN AND GENERAL NOTES
FW100	FORM-LINED WALLS MODULE TYPES
FW101	FORM-LINED WALLS GENERAL FINISH DETAILS SHEET 1 OF 3
FW102	FORM-LINED WALLS GENERAL FINISH DETAILS SHEET 2 OF 3
FW103	FORM-LINED WALLS GENERAL FINISH DETAILS SHEET 3 OF 3
FW104	FORM-LINED WALLS TYPICAL LAYOUT PLAN AND ELEVATION
FW105	FORM-LINED WALLS WALL TYPES
FW106	FORM-LINED HIGHWAY FENCE DETAILS
FW300	FORM-LINED WALLS FINISH LAYOUT SEGMENT 1 - REACH A STA. 9+07 - 16+91
FW301	FORM-LINED WALLS FINISH LAYOUT SEGMENT 1 - REACH B STA. 16+91 - 23+82
FW302	FORM-LINED WALLS FINISH LAYOUT SEGMENT 1 - REACH C STA. 23+82 - 30+44
FW305	FORM-LINED WALLS FINISH LAYOUT SEGMENT 2 - REACH F STA. 49+94 - 58+67

DWG NO.	SHEET TITLE
FW306	FORM-LINED WALLS FINISH LAYOUT SEGMENT 2 - REACH G STA. 58+67 - 69+33
FW308	FORM-LINED WALLS FINISH LAYOUT SEGMENT 3 - REACHES I & J
FW310	FORM-LINED WALLS FINISH LAYOUT SEGMENT 3 - REACH K STA. 96+28 - 102+34
FW350	FORM-LINED WALLS ENLARGEMENTS MONTGOMERY STREET SHEET 1 OF 2
FW351	FORM-LINED WALLS ENLARGEMENTS MONTGOMERY STREET SHEET 2 OF 2
FW352	FORM-LINED WALLS ENLARGEMENTS S. FDR EDGE RETAINING WALL TRANSITION
FW353	FORM-LINED WALLS ENLARGEMENTS S. HOUSTON STREET WALL TRANSITION
FW354	FORM-LINED WALLS ENLARGEMENTS N. HOUSTON STREET WALL TRANSITION
FW355	FORM-LINED WALLS ENLARGEMENTS N. FDR EDGE RETAINING WALL TRANSITION
FW356	FORM-LINED WALLS ENLARGEMENTS FDR GATE CROSSING RETAINING WALL
WS001	WATERFRONT STRUCTURES GENERAL NOTES 1 OF 2
WS002	WATERFRONT STRUCTURES GENERAL NOTES 2 OF 2
WS003	WATERFRONT STRUCTURES CUT-OFF WALL RECOMMENDED CONSTRUCTION SEQUENCE 1 OF 3
WS004	WATERFRONT STRUCTURES CUT-OFF WALL RECOMMENDED CONSTRUCTION SEQUENCE 2 OF 3
WS005	WATERFRONT STRUCTURES CUT-OFF WALL RECOMMENDED CONSTRUCTION SEQUENCE 3 OF 3
WS100	WATERFRONT DEMOLITION PLAN SEGMENT 1 - REACH C STA. 23+82 - 30+44
WS101	WATERFRONT DEMOLITION PLAN SEGMENT 1 - REACH D STA. 30+44 - 39+99
WS102	WATERFRONT DEMOLITION PLAN SEGMENT 1 - REACH E STA. 39+99 - 49+94
WS103	WATERFRONT DEMOLITION PLAN SEGMENT 2 - REACH F STA. 49+94 - 58+67
WS104	WATERFRONT DEMOLITION PLAN SEGMENT 2 - REACH G STA. 58+67 - 69+33
WS105	WATERFRONT DEMOLITION PLAN SEGMENT 2 - REACH H STA. 69+33 - 77+58

DWG NO.	SHEET TITLE
WS106	WATERFRONT DEMOLITION PLAN SEGMENT 3 - REACH I STA. 77+58 - 86+64
WS107	WATERFRONT DEMOLITION PLAN SEGMENT 3 - REACH J STA. 86+64 - 96+28
WS110	CUT-OFF WALL DEMOLITION PLANS SEGMENT 1 - STA 9+72 - 12+80
WS111	CUT-OFF WALL DEMOLITION PLANS SEGMENT 1 - STA. 12+80 - 15+60
WS112	CUT-OFF WALL DEMOLITION PLANS SEGMENT 1 - STA. 15+60 - 18+50
WS113	CUT-OFF WALL DEMOLITION PLANS SEGMENT 1 - STA. 18+50 - 21+50
WS114	CUT-OFF WALL DEMOLITION PLANS SEGMENT 1 - STA. 21+50 - 24+60
WS115	CUT-OFF WALL DEMOLITION PLANS SEGMENT 1 - STA. 24+60 - 27+90
WS116	CUT-OFF WALL DEMOLITION PLANS SEGMENT 1 - STA. 27+90 - 31+10
WS117	CUT-OFF WALL DEMOLITION PLANS SEGMENT 2 - STA. 31+10 - 34+10
WS118	CUT-OFF WALL DEMOLITION PLANS SEGMENT 2 - STA. 34+10 - 37+00
WS119	CUT-OFF WALL DEMOLITION PLANS SEGMENT 2 - STA. 37+00 - 39+80
WS120	CUT-OFF WALL DEMOLITION PLANS SEGMENT 2 - STA. 39+80 - 42+50
WS121	CUT-OFF WALL DEMOLITION PLANS SEGMENT 2 - STA. 42+50 - 45+30
WS122	CUT-OFF WALL DEMOLITION PLANS SEGMENT 2 - STA. 45+30 - 48+00
WS123	CUT-OFF WALL DEMOLITION PLANS SEGMENT 2 - STA. 48+00 - 50+90
WS124	CUT-OFF WALL DEMOLITION PLANS SEGMENT 2 - STA. 50+90 - 53+90
WS125	CUT-OFF WALL DEMOLITION PLANS SEGMENT 2 - STA. 53+90 - 56+70
WS126	CUT-OFF WALL DEMOLITION PLANS SEGMENT 2 - STA. 56+70 + 59+50
WS127	CUT-OFF WALL DEMOLITION PLANS SEGMENT 3 - STA. 59+50 - 62+30
WS128	CUT-OFF WALL DEMOLITION PLANS SEGMENT 3 - STA. 62+30 - 65+20
WS129	CUT-OFF WALL DEMOLITION PLANS SEGMENT 3 - STA. 65+20 - 68+30
WS130	CUT-OFF WALL DEMOLITION PLANS SEGMENT 3 - STA. 68+30 - 71+70
WS131	CUT-OFF WALL DEMOLITION PLANS SHEET 1 OF 5
WS132	CUT-OFF WALL DEMOLITION PLANS SHEET 2 OF 5
WS133	CUT-OFF WALL DEMOLITION PLANS SHEET 3 OF 5
WS134	CUT-OFF WALL DEMOLITION PLANS SHEET 4 OF 5
WS135	CUT-OFF WALL DEMOLITION PLANS SHEET 5 OF 5
WS136	WATERFRONT ESPLANADE DEMOLITION PLANS SHEET 1 OF 4
WS137	WATERFRONT ESPLANADE DEMOLITION PLANS SHEET 2 OF 4
WS138	WATERFRONT ESPLANADE DEMOLITION PLANS SHEET 3 OF 4
WS139	WATERFRONT ESPLANADE DEMOLITION PLANS SHEET 4 OF 4
WS140	WATERFRONT DEMOLITION SECTION SHEET 1 OF 10
WS141	WATERFRONT DEMOLITION SECTION SHEET 2 OF 10

DWG NO.	SHEET TITLE
WS142	WATERFRONT DEMOLITION SECTION SHEET 3 OF 10
WS143	WATERFRONT DEMOLITION SECTION SHEET 4 OF 10
WS144	WATERFRONT DEMOLITION SECTION SHEET 5 OF 10
WS145	WATERFRONT DEMOLITION SECTION SHEET 6 OF 10
WS146	WATERFRONT DEMOLITION SECTION SHEET 7 OF 10
WS147	WATERFRONT DEMOLITION SECTION SHEET 8 OF 10
WS148	WATERFRONT DEMOLITION SECTION SHEET 9 OF 10
WS149	WATERFRONT DEMOLITION SECTION SHEET 10 OF 10
WS160	WATERFRONT DEMOLITION DETAILS SHEET 1 OF 5
WS161	WATERFRONT DEMOLITION DETAILS SHEET 2 OF 5
WS162	WATERFRONT DEMOLITION DETAILS SHEET 3 OF 5
WS163	WATERFRONT DEMOLITION DETAILS SHEET 4 OF 5
WS164	WATERFRONT DEMOLITION DETAILS SHEET 5 OF 5
WS165	WATERFRONT ESPLANADE DEMOLITION DETAILS SHEET 1 OF 3
WS166	WATERFRONT ESPLANADE DEMOLITION DETAILS SHEET 2 OF 3
WS167	WATERFRONT ESPLANADE DEMOLITION DETAILS SHEET 3 OF 3
WS300	WATERFRONT GENERAL PLAN SEGMENT 1 - REACH C STA. 23+82 - 30+44
WS301	WATERFRONT GENERAL PLAN SEGMENT 1 - REACH D STA. 30+44 - 39+99
WS302	WATERFRONT GENERAL PLAN SEGMENT 1 - REACH E STA. 39+99 - 49+94
WS303	WATERFRONT GENERAL PLAN SEGMENT 2 - REACH F STA. 49+94 - 58+67
WS304	WATERFRONT GENERAL PLAN SEGMENT 2 - REACH G STA. 58+67 - 69+33
WS305	WATERFRONT GENERAL PLAN SEGMENT 2 - REACH H STA. 69+33 - 77+58
WS306	WATERFRONT GENERAL PLAN SEGMENT 3 - REACH I STA. 77+58 - 86+64
WS307	WATERFRONT GENERAL PLAN SEGMENT 3 - REACH J STA. 86+64 - 96+28
WS310	WATERFRONT GROUND IMPROVEMENT PLAN SEGMENT 1 - REACH C STA. 23+82 - 30+44
WS311	WATERFRONT GROUND IMPROVEMENT PLAN SEGMENT 1 - REACH D STA. 30+44 - 39+99
WS312	WATERFRONT GROUND IMPROVEMENT PLAN SEGMENT 1 - REACH E STA. 39+99 - 49+94

DWG NO.	SHEET TITLE
WS312	WATERFRONT GROUND IMPROVEMENT PLAN SEGMENT 2 - REACH F STA. 49+94 - 58+67
WS314	WATERFRONT GROUND IMPROVEMENT PLAN SEGMENT 2 - REACH G STA. 58+67 - 69+33
WS315	WATERFRONT GROUND IMPROVEMENT PLAN SEGMENT 2 - REACH H STA. 69+33 - 77+58
WS316	WATERFRONT GROUND IMPROVEMENT PLAN SEGMENT 3 - REACH I STA. 77+58 - 86+64
WS317	WATERFRONT GROUND IMPROVEMENT PLAN SEGMENT 3 - REACH J STA. 86+64 - 96+28
WS320	WATERFRONT GROUND IMPROVEMENT DETAILED PLAN SHEET 1 OF 10
WS321	WATERFRONT GROUND IMPROVEMENT DETAILED PLAN SHEET 2 OF 10
WS322	WATERFRONT GROUND IMPROVEMENT DETAILED PLAN SHEET 3 OF 10
WS323	WATERFRONT GROUND IMPROVEMENT DETAILED PLAN SHEET 4 OF 10
WS324	WATERFRONT GROUND IMPROVEMENT DETAILED PLAN SHEET 5 OF 10
WS325	WATERFRONT GROUND IMPROVEMENT DETAILED PLAN SHEET 6 OF 10
WS326	WATERFRONT GROUND IMPROVEMENT DETAILED PLAN SHEET 7 OF 10
WS327	WATERFRONT GROUND IMPROVEMENT DETAILED PLAN SHEET 8 OF 10
WS328	WATERFRONT GROUND IMPROVEMENT DETAILED PLAN SHEET 9 OF 10
WS329	WATERFRONT GROUND IMPROVEMENT DETAILED PLAN SHEET 10 OF 10
WS329A	WATERFRONT LIGHTING FOUNDATION PLAN SEGMENT 1 - REACH C STA. 23+82 - 30+44
WS329B	WATERFRONT LIGHTING FOUNDATION PLAN SEGMENT 1 - REACH D STA. 30+44 - 39+99
WS329C	WATERFRONT LIGHTING FOUNDATION PLAN SEGMENT 1 - REACH E STA. 39+99 - 49+94
WS329D	WATERFRONT LIGHTING FOUNDATION PLAN SEGMENT 2 - REACH F STA. 49+94 - 58+67
WS329E	WATERFRONT LIGHTING FOUNDATION PLAN SEGMENT 2 - REACH G STA. 58+67 - 69+33

DWG NO.	SHEET TITLE
WS329F	WATERFRONT LIGHTING FOUNDATION PLAN SEGMENT 2 - REACH H STA. 69+33 - 77+58
WS329G	WATERFRONT LIGHTING FOUNDATION PLAN SEGMENT 3 - REACH I STA. 77+58 - 86+64
WS329H	WATERFRONT LIGHTING FOUNDATION PLAN SEGMENT 3 - REACH J STA. 86+64 - 96+28
WS330	CUT-OFF WALL PLANS SEGMENT 1 - STA 9+72 TO 11+40
WS331	CUT-OFF WALL PLANS SEGMENT 1 - STA11+40 TO 12+80
WS332	CUT-OFF WALL PLANS SEGMENT 1 - STA 12+80 TO 14+40
WS333	CUT-OFF WALL PLANS SEGMENT 1 - STA 14+40 TO 15+60
WS334	CUT-OFF WALL PLANS SEGMENT 1 - STA 15+60 TO 17+20
WS335	CUT-OFF WALL PLANS SEGMENT 1 - STA 17+20 TO 18+50
WS336	CUT-OFF WALL PLANS SEGMENT 1 - STA 18+50 TO 19+90
WS337	CUT-OFF WALL PLANS SEGMENT 1 - STA 19+90 TO 21+50
WS338	CUT-OFF WALL PLANS SEGMENT 1 - STA 21+50 TO 23+00
WS339	CUT-OFF WALL PLANS SEGMENT 1 - STA 23+00 TO 24+60
WS340	CUT-OFF WALL PLANS SEGMENT 1 - STA 24+60 TO 26+20
WS341	CUT-OFF WALL PLANS SEGMENT 1 - STA 26+20 TO 27+90
WS342	CUT-OFF WALL PLANS SEGMENT 1 - STA 27+90 TO 29+60
WS343	CUT-OFF WALL PLANS SEGMENT 2 - STA 29+60 TO 31+10
WS344	CUT-OFF WALL PLANS SEGMENT 2 - STA 31+10 TO 32+40
WS345	CUT-OFF WALL PLANS SEGMENT 2 - STA 32+40 TO 34+10
WS346	CUT-OFF WALL PLANS SEGMENT 2 - STA 34+10 TO 35+50
WS347	CUT-OFF WALL PLANS SEGMENT 2 - STA 35+50 TO 37+00
WS348	CUT-OFF WALL PLANS SEGMENT 2 - STA 37+00 TO 38+40
WS349	CUT-OFF WALL PLANS SEGMENT 2 - STA 38+40 TO 39+80
WS350	CUT-OFF WALL PLANS SEGMENT 2 - STA 39+80 TO 41+00
WS351	CUT-OFF WALL PLANS SEGMENT 2 - STA 41+00 TO 42+50
WS352	CUT-OFF WALL PLANS SEGMENT 2 - STA 42+50 TO 43+90
WS353	CUT-OFF WALL PLANS SEGMENT 2 - STA 43+90 TO 45+30
WS354	CUT-OFF WALL PLANS SEGMENT 2 - STA 45+30 TO 46+70
WS355	CUT-OFF WALL PLANS SEGMENT 2 - STA 46+70 TO 48+00
WS356	CUT-OFF WALL PLANS SEGMENT 2 - STA 48+00 TO 49+20
WS357	CUT-OFF WALL PLANS SEGMENT 2 - STA 49+20 TO 50+90
WS358	CUT-OFF WALL PLANS SEGMENT 2 - STA 50+90 TO 52+40
WS359	CUT-OFF WALL PLANS SEGMENT 2 - STA 52+40 TO 53+90

DWG NO.	SHEET TITLE
WS360	CUT-OFF WALL PLANS SEGMENT 2 - STA 53+90 TO 55+30
WS361	CUT-OFF WALL PLANS SEGMENT 2 - STA 55+30 TO 56+70
WS362	CUT-OFF WALL PLANS SEGMENT 2 - STA 56+70 TO 58+20
WS363	CUT-OFF WALL PLANS SEGMENT 3 - STA 58+20 TO 59+50
WS364	CUT-OFF WALL PLANS SEGMENT 3 - STA 59+50 TO 60+90
WS365	CUT-OFF WALL PLANS SEGMENT 3 - STA 60+90 TO 62+30
WS366	CUT-OFF WALL PLANS SEGMENT 3 - STA 62+30 TO 63+70
WS367	CUT-OFF WALL PLANS SEGMENT 3 - STA 63+70 TO 65+20
WS368	CUT-OFF WALL PLANS SEGMENT 3 - STA 65+20 TO 66+70
WS369	CUT-OFF WALL PLANS SEGMENT 3 - STA 66+70 TO 68+30
WS370	CUT-OFF WALL PLANS SEGMENT 3 - STA 68+30 TO 69+90
WS371	CUT-OFF WALL PLANS SEGMENT 3 - STA 69+90 TO 71+70
WS400	CUT-OFF WALL PROFILES SEGMENT 1 - STA 9+72 TO 11+40
WS401	CUT-OFF WALL PROFILES SEGMENT 1 - STA11+40 TO 12+80
WS402	CUT-OFF WALL PROFILES SEGMENT 1 - STA 12+80 TO 14+40
WS403	CUT-OFF WALL PROFILES SEGMENT 1 - STA 14+40 TO 15+60
WS404	CUT-OFF WALL PROFILES SEGMENT 1 - STA 15+60 TO 17+20
WS405	CUT-OFF WALL PROFILES SEGMENT 1 - STA 17+20 TO 18+50
WS406	CUT-OFF WALL PROFILES SEGMENT 1 - STA 18+50 TO 19+90
WS407	CUT-OFF WALL PROFILES SEGMENT 1 - STA 19+90 TO 21+50
WS408	CUT-OFF WALL PROFILES SEGMENT 1 - STA 21+50 TO 23+00
WS409	CUT-OFF WALL PROFILES SEGMENT 1 - STA 23+00 TO 24+60
WS410	CUT-OFF WALL PROFILES SEGMENT 1 - STA 24+60 TO 26+20
WS411	CUT-OFF WALL PROFILES SEGMENT 1 - STA 26+20 TO 27+90
WS412	CUT-OFF WALL PROFILES SEGMENT 1 - STA 27+90 TO 29+60
WS413	CUT-OFF WALL PROFILES SEGMENT 2 - STA 29+60 TO 31+10
WS414	CUT-OFF WALL PROFILES SEGMENT 2 - STA 31+10 TO 32+40
WS415	CUT-OFF WALL PROFILES SEGMENT 2 - STA 32+40 TO 34+10
WS416	CUT-OFF WALL PROFILES SEGMENT 2 - STA 34+10 TO 35+50
WS417	CUT-OFF WALL PROFILES SEGMENT 2 - STA 35+50 TO 37+00
WS418	CUT-OFF WALL PROFILES SEGMENT 2 - STA 37+00 TO 38+40
WS419	CUT-OFF WALL PROFILES SEGMENT 2 - STA 38+40 TO 39+80
WS420	CUT-OFF WALL PROFILES SEGMENT 2 - STA 39+80 TO 41+00
WS421	CUT-OFF WALL PROFILES SEGMENT 2 - STA 41+00 TO 42+50
WS422	CUT-OFF WALL PROFILES SEGMENT 2 - STA 42+50 TO 43+90
WS423	CUT-OFF WALL PROFILES SEGMENT 2 - STA 43+90 TO 45+30

DWG NO.	SHEET TITLE
WS424	CUT-OFF WALL PROFILES SEGMENT 2 - STA 45+30 TO 46+70
WS425	CUT-OFF WALL PROFILES SEGMENT 2 - STA 46+70 TO 48+00
WS426	CUT-OFF WALL PROFILES SEGMENT 2 - STA 48+00 TO 49+20
WS427	CUT-OFF WALL PROFILES SEGMENT 2 - STA 49+20 TO 50+90
WS428	CUT-OFF WALL PROFILES SEGMENT 2 - STA 50+90 TO 52+40
WS429	CUT-OFF WALL PROFILES SEGMENT 2 - STA 52+40 TO 53+90
WS430	CUT-OFF WALL PROFILES SEGMENT 2 - STA 53+90 TO 55+30
WS431	CUT-OFF WALL PROFILES SEGMENT 2 - STA 55+30 TO 56+70
WS432	CUT-OFF WALL PROFILES SEGMENT 2 - STA 56+70 TO 58+20
WS433	CUT-OFF WALL PROFILES SEGMENT 3 - STA 58+20 TO 59+50
WS434	CUT-OFF WALL PROFILES SEGMENT 3 - STA 59+50 TO 60+90
WS435	CUT-OFF WALL PROFILES SEGMENT 3 - STA 60+90 TO 62+30
WS436	CUT-OFF WALL PROFILES SEGMENT 3 - STA 62+30 TO 63+70
WS437	CUT-OFF WALL PROFILES SEGMENT 3 - STA 63+70 TO 65+20
WS438	CUT-OFF WALL PROFILES SEGMENT 3 - STA 65+20 TO 66+70
WS439	CUT-OFF WALL PROFILES SEGMENT 3 - STA 66+70 TO 68+30
WS440	CUT-OFF WALL PROFILES SEGMENT 3 - STA 68+30 TO 69+90
WS441	CUT-OFF WALL PROFILES SEGMENT 3 - STA 69+90 TO 71+70
WS450	WATERFRONT ESPLANADE ELEVATION SHEET 1 OF 12
WS451	WATERFRONT ESPLANADE ELEVATION SHEET 2 OF 12
WS452	WATERFRONT ESPLANADE ELEVATION SHEET 3 OF 12
WS453	WATERFRONT ESPLANADE ELEVATION SHEET 4 OF 12
WS454	WATERFRONT ESPLANADE ELEVATION SHEET 5 OF 12
WS455	WATERFRONT ESPLANADE ELEVATION SHEET 6 OF 12
WS456	WATERFRONT ESPLANADE ELEVATION SHEET 7 OF 12
WS457	WATERFRONT ESPLANADE ELEVATION SHEET 8 OF 12
WS458	WATERFRONT ESPLANADE ELEVATION SHEET 9 OF 12
WS459	WATERFRONT ESPLANADE ELEVATION SHEET 10 OF 12
WS460	WATERFRONT ESPLANADE ELEVATION SHEET 11 OF 12
WS461	WATERFRONT ESPLANADE ELEVATION SHEET 12 OF 12
WS500	WATERFRONT ESPLANADE PROPOSED PILE DETAILS SHEET 1 OF 2
WS501	WATERFRONT ESPLANADE PROPOSED PILE DETAILS SHEET 2 OF 2
WS510	WATERFRONT ESPLANADE PIER DATA TABLES
WS511	WATERFRONT ESPLANADE PROPOSED PILE CAP DETAILS SHEET 1 OF 2

DWG NO.	SHEET TITLE
WS512	WATERFRONT ESPLANADE PROPOSED PILE CAP DETAILS SHEET 2 OF 2
WS513	WATERFRONT ESPLANADE MISCELLANEOUS PILE CAP DETAILS SHEET 1 OF 2
WS514	WATERFRONT ESPLANADE MISCELLANEOUS PILE CAP DETAILS SHEET 2 OF 2
WS520	WATERFRONT ESPLANADE FRAMING PLAN SHEET 1 OF 8
WS521	WATERFRONT ESPLANADE FRAMING PLAN SHEET 2 OF 8
WS522	WATERFRONT ESPLANADE FRAMING PLAN SHEET 3 OF 8
WS523	WATERFRONT ESPLANADE FRAMING PLAN SHEET 4 OF 8
WS524	WATERFRONT ESPLANADE FRAMING PLAN SHEET 5 OF 8
WS525	WATERFRONT ESPLANADE FRAMING PLAN SHEET 6 OF 8
WS526	WATERFRONT ESPLANADE FRAMING PLAN SHEET 7 OF 8
WS527	WATERFRONT ESPLANADE FRAMING PLAN SHEET 8 OF 8
WS530	WATERFRONT ESPLANADE DECK TYPICAL REINFORCEMENT PLAN SHEET 1 OF 10
WS531	WATERFRONT ESPLANADE DECK TYPICAL REINFORCEMENT PLAN SHEET 2 OF 10
WS532	WATERFRONT ESPLANADE DECK TYPICAL REINFORCEMENT PLAN SHEET 3 OF 10
WS533	WATERFRONT ESPLANADE DECK TYPICAL REINFORCEMENT PLAN SHEET 4 OF 10
WS534	WATERFRONT ESPLANADE DECK TYPICAL REINFORCEMENT PLAN SHEET 5 OF 10
WS535	WATERFRONT ESPLANADE DECK TYPICAL REINFORCEMENT PLAN SHEET 6 OF 10
WS536	WATERFRONT ESPLANADE DECK TYPICAL REINFORCEMENT PLAN SHEET 7 OF 10
WS537	WATERFRONT ESPLANADE DECK TYPICAL REINFORCEMENT PLAN SHEET 8 OF 10
WS538	WATERFRONT ESPLANADE DECK TYPICAL REINFORCEMENT PLAN SHEET 9 OF 10
WS539	WATERFRONT ESPLANADE DECK TYPICAL REINFORCEMENT PLAN SHEET 10 OF 10
WS539A	WATERFRONT ESPLANADE DRAINAGE PLAN SHEET 1 OF 8
WS539B	WATERFRONT ESPLANADE DRAINAGE PLAN SHEET 2 OF 8
WS539C	WATERFRONT ESPLANADE DRAINAGE PLAN SHEET 3 OF 8
WS539D	WATERFRONT ESPLANADE DRAINAGE PLAN SHEET 4 OF 8
WS539E	WATERFRONT ESPLANADE DRAINAGE PLAN SHEET 5 OF 8

DWG NO.	SHEET TITLE
WS539F	WATERFRONT ESPLANADE DRAINAGE PLAN SHEET 6 OF 8
WS539G	WATERFRONT ESPLANADE DRAINAGE PLAN SHEET 7 OF 8
WS539H	WATERFRONT ESPLANADE DRAINAGE PLAN SHEET 8 OF 8
WS600	WATERFRONT STRUCTURES CROSS SECTIONS SHEET 1 OF 30
WS601	WATERFRONT STRUCTURES CROSS SECTIONS SHEET 2 OF 30
WS602	WATERFRONT STRUCTURES CROSS SECTIONS SHEET 3 OF 30
WS603	WATERFRONT STRUCTURES CROSS SECTIONS SHEET 4 OF 30
WS604	WATERFRONT STRUCTURES CROSS SECTIONS SHEET 5 OF 30
WS605	WATERFRONT STRUCTURES CROSS SECTIONS SHEET 6 OF 30
WS606	WATERFRONT STRUCTURES CROSS SECTIONS SHEET 7 OF 30
WS606A	WATERFRONT STRUCTURES CROSS SECTIONS SHEET 7A OF 30
WS607	WATERFRONT STRUCTURES CROSS SECTIONS SHEET 8 OF 30
WS607A	WATERFRONT STRUCTURES CROSS SECTIONS SHEET 8A OF 30
WS608	WATERFRONT STRUCTURES CROSS SECTIONS SHEET 9 OF 30
WS608A	WATERFRONT STRUCTURES CROSS SECTIONS SHEET 9A OF 30
WS609	WATERFRONT STRUCTURES CROSS SECTIONS SHEET 10 OF 30
WS610	WATERFRONT STRUCTURES CROSS SECTIONS SHEET 11 OF 30
WS611	WATERFRONT STRUCTURES CROSS SECTIONS SHEET 12 OF 30
WS612	WATERFRONT STRUCTURES CROSS SECTIONS SHEET 13 OF 30
WS613	WATERFRONT STRUCTURES CROSS SECTIONS SHEET 14 OF 30
WS614	WATERFRONT STRUCTURES CROSS SECTIONS SHEET 15 OF 30
WS615	WATERFRONT STRUCTURES CROSS SECTIONS SHEET 16 OF 30
WS616	WATERFRONT STRUCTURES CROSS SECTIONS SHEET 17 OF 30
WS617	WATERFRONT STRUCTURES CROSS SECTIONS SHEET 18 OF 30
WS618	WATERFRONT STRUCTURES CROSS SECTIONS SHEET 19 OF 30
WS619	WATERFRONT STRUCTURES CROSS SECTIONS SHEET 20 OF 30
WS619A	WATERFRONT STRUCTURES CROSS SECTIONS SHEET 20A OF 30
WS620	WATERFRONT STRUCTURES CROSS SECTIONS SHEET 21 OF 30
WS621	WATERFRONT STRUCTURES CROSS SECTIONS SHEET 22 OF 30
WS622	WATERFRONT STRUCTURES CROSS SECTIONS SHEET 23 OF 30
WS623	WATERFRONT STRUCTURES CROSS SECTIONS SHEET 24 OF 30
WS624	WATERFRONT STRUCTURES CROSS SECTIONS SHEET 25 OF 30
WS625	WATERFRONT STRUCTURES CROSS SECTIONS SHEET 26 OF 30
WS626	WATERFRONT STRUCTURES CROSS SECTIONS SHEET 27 OF 30
WS627	WATERFRONT STRUCTURES CROSS SECTIONS SHEET 28 OF 30
WS628	WATERFRONT STRUCTURES CROSS SECTIONS SHEET 29 OF 30

DWG NO.	SHEET TITLE
WS629	WATERFRONT STRUCTURES CROSS SECTIONS SHEET 30 OF 30
WS630	CUT-OFF WALL DETAILED CROSS SECTIONS SHEET 1 OF 10
WS631	CUT-OFF WALL DETAILED CROSS SECTIONS SHEET 2 OF 10
WS632	CUT-OFF WALL DETAILED CROSS SECTIONS SHEET 3 OF 10
WS633	CUT-OFF WALL DETAILED CROSS SECTIONS SHEET 4 OF 10
WS634	CUT-OFF WALL DETAILED CROSS SECTIONS SHEET 5 OF 10
WS635	CUT-OFF WALL DETAILED CROSS SECTIONS SHEET 6 OF 10
WS636	CUT-OFF WALL DETAILED CROSS SECTIONS SHEET 7 OF 10
WS637	CUT-OFF WALL DETAILED CROSS SECTIONS SHEET 8 OF 10
WS638	CUT-OFF WALL DETAILED CROSS SECTIONS SHEET 9 OF 10
WS639	CUT-OFF WALL DETAILED CROSS SECTIONS SHEET 10 OF 10
WS660	WATERFRONT ESPLANADE TYPICAL SECTIONS SHEET 1 OF 8
WS661	WATERFRONT ESPLANADE TYPICAL SECTIONS SHEET 2 OF 8
WS662	WATERFRONT ESPLANADE TYPICAL SECTIONS SHEET 3 OF 8
WS663	WATERFRONT ESPLANADE TYPICAL SECTIONS SHEET 4 OF 8
WS664	WATERFRONT ESPLANADE TYPICAL SECTIONS SHEET 5 OF 8
WS665	WATERFRONT ESPLANADE TYPICAL SECTIONS SHEET 6 OF 8
WS666	WATERFRONT ESPLANADE TYPICAL SECTIONS SHEET 7 OF 8
WS667	WATERFRONT ESPLANADE TYPICAL SECTIONS SHEET 8 OF 8
WS680	WATERFRONT ESPLANADE DECK TYPICAL SECTIONS SHEET 1 OF 4
WS681	WATERFRONT ESPLANADE DECK TYPICAL SECTIONS SHEET 2 OF 4
WS682	WATERFRONT ESPLANADE DECK TYPICAL SECTIONS SHEET 3 OF 4
WS683	WATERFRONT ESPLANADE DECK TYPICAL SECTIONS SHEET 4 OF 4
WS690	WATERFRONT ESPLANADE DECK MISCELLANEOUS DETAILS SHEET 1 OF 2
WS691	WATERFRONT ESPLANADE DECK MISCELLANEOUS DETAILS SHEET 2 OF 2
WS691A	WATERFRONT ESPLANADE DRAINAGE DETAILS
WS700	WATERFRONT ESPLANADE PRESTRESSED CONCRETE BEAM DETAILS SHEET 1 OF 14
WS701	WATERFRONT ESPLANADE PRESTRESSED CONCRETE BEAM DETAILS SHEET 2 OF 14
WS702	WATERFRONT ESPLANADE PRESTRESSED CONCRETE BEAM DETAILS SHEET 3 OF 14
WS703	WATERFRONT ESPLANADE PRESTRESSED CONCRETE BEAM DETAILS SHEET 4 OF 14

DWG NO.	SHEET TITLE
WS704	WATERFRONT ESPLANADE PRESTRESSED CONCRETE BEAM DETAILS SHEET 5 OF 14
WS705	WATERFRONT ESPLANADE PRESTRESSED CONCRETE BEAM DETAILS SHEET 6 OF 14
WS706	WATERFRONT ESPLANADE PRESTRESSED CONCRETE BEAM DETAILS SHEET 7 OF 14
WS707	WATERFRONT ESPLANADE PRESTRESSED CONCRETE BEAM DETAILS SHEET 8 OF 14
WS708	WATERFRONT ESPLANADE PRESTRESSED CONCRETE BEAM DETAILS SHEET 9 OF 14
WS709	WATERFRONT ESPLANADE PRESTRESSED CONCRETE BEAM DETAILS SHEET 10 OF 14
WS710	WATERFRONT ESPLANADE PRESTRESSED CONCRETE BEAM DETAILS SHEET 11 OF 14
WS711	WATERFRONT ESPLANADE PRESTRESSED CONCRETE BEAM DETAILS SHEET 12 OF 14
WS712	WATERFRONT ESPLANADE PRESTRESSED CONCRETE BEAM DETAILS SHEET 13 OF 14
WS713	WATERFRONT ESPLANADE PRESTRESSED CONCRETE BEAM DETAILS SHEET 14 OF 14
WS714	WATERFRONT ESPLANADE PRESTRESSED HOLLOW SLAB UNIT DETAILS SHEET 1 OF 4
WS715	WATERFRONT ESPLANADE PRESTRESSED HOLLOW SLAB UNIT DETAILS SHEET 2 OF 4
WS716	WATERFRONT ESPLANADE PRESTRESSED HOLLOW SLAB UNIT DETAILS SHEET 3 OF 4
WS717	WATERFRONT ESPLANADE PRESTRESSED HOLLOW SLAB UNIT DETAILS SHEET 4 OF 4
WS718	WATERFRONT ESPLANADE PIER 164 DETAILS
WS720	WATERFRONT ESPLANADE SLAB UNIT DETAILS SHEET 1 OF 2
WS721	WATERFRONT ESPLANADE SLAB UNIT DETAILS SHEET 2 OF 2
WS722	WATERFRONT ESPLANADE TRANSVERSE RETAINING WALL DETAILS SHEET 1 OF 2
WS723	WATERFRONT ESPLANADE TRANSVERSE RETAINING WALL DETAILS SHEET 2 OF 2
WS730	WATERFRONT ESPLANADE EXPANSION JOINT DETAILS SHEET 1 OF 2
WS731	WATERFRONT ESPLANADE EXPANSION JOINT DETAILS SHEET 2 OF 2
WS740	WATERFRONT ESPLANADE ELASTOMERIC BEARING SHEET 1 OF 3
WS741	WATERFRONT ESPLANADE ELASTOMERIC BEARING SHEET 2 OF 3

DWG NO.	SHEET TITLE
WS742	WATERFRONT ESPLANADE ELASTOMERIC BEARING SHEET 3 OF 3
WS750	CUT-OFF WALL REINFORCEMENT DETAILS SHEET 1 OF 17
WS751	CUT-OFF WALL REINFORCEMENT DETAILS SHEET 2 OF 17
WS752	CUT-OFF WALL REINFORCEMENT DETAILS SHEET 3 OF 17
WS753	CUT-OFF WALL REINFORCEMENT DETAILS SHEET 4 OF 17
WS754	CUT-OFF WALL REINFORCEMENT DETAILS SHEET 5 OF 17
WS755	CUT-OFF WALL REINFORCEMENT DETAILS SHEET 6 OF 17
WS756	CUT-OFF WALL REINFORCEMENT DETAILS SHEET 7 OF 17
WS757	CUT-OFF WALL REINFORCEMENT DETAILS SHEET 8 OF 17
WS758	CUT-OFF WALL REINFORCEMENT DETAILS SHEET 9 OF 17
WS759	CUT-OFF WALL REINFORCEMENT DETAILS SHEET 10 OF 17
WS759A	CUT-OFF WALL REINFORCEMENT DETAILS SHEET 10A OF 17
WS759B	CUT-OFF WALL REINFORCEMENT DETAILS SHEET 10B OF 17
WS760	CUT-OFF WALL REINFORCEMENT DETAILS SHEET 11 OF 17
WS761	CUT-OFF WALL REINFORCEMENT DETAILS SHEET 12 OF 17
WS761A	CUT-OFF WALL REINFORCEMENT DETAILS SHEET 12A OF 17
WS762	CUT-OFF WALL REINFORCEMENT DETAILS SHEET 13 OF 17
WS763	CUT-OFF WALL REINFORCEMENT DETAILS SHEET 14 OF 17
WS764	CUT-OFF WALL REINFORCEMENT DETAILS SHEET 15 OF 17
WS765	CUT-OFF WALL REINFORCEMENT DETAILS SHEET 16 OF 17
WS765A	CUT-OFF WALL REINFORCEMENT DETAILS SHEET 16A OF 17
WS765B	CUT-OFF WALL REINFORCEMENT DETAILS SHEET 16B OF 17
WS765C	CUT-OFF WALL REINFORCEMENT DETAILS SHEET 16C OF 17
WS766	CUT-OFF WALL REINFORCEMENT DETAILS SHEET 17 OF 17
WS766A	CUT-OFF WALL REINFORCEMENT DETAILS SHEET 17A OF 17
WS770	CUT-OFF WALL SEWER CROSSING DETAILS SHEET 1 OF 10
WS770A	CUT-OFF WALL SEWER CROSSING DETAILS SHEET 1A OF 10
WS771	CUT-OFF WALL SEWER CROSSING DETAILS SHEET 2 OF 10
WS771A	CUT-OFF WALL SEWER CROSSING DETAILS SHEET 2A OF 10
WS772	CUT-OFF WALL SEWER CROSSING DETAILS SHEET 3 OF 10
WS772A	CUT-OFF WALL SEWER CROSSING DETAILS SHEET 3A OF 10
WS773	CUT-OFF WALL SEWER CROSSING DETAILS SHEET 4 OF 10
WS773A	CUT-OFF WALL SEWER CROSSING DETAILS SHEET 4A OF 10
WS774	CUT-OFF WALL SEWER CROSSING DETAILS SHEET 5 OF 10
WS774A	CUT-OFF WALL SEWER CROSSING DETAILS SHEET 5A OF 10
WS775	CUT-OFF WALL SEWER CROSSING DETAILS SHEET 6 OF 10

DWG NO.	SHEET TITLE
WS775A	CUT-OFF WALL SEWER CROSSING DETAILS SHEET 6A OF 10
WS776	CUT-OFF WALL SEWER CROSSING DETAILS SHEET 7 OF 10
WS776A	CUT-OFF WALL SEWER CROSSING DETAILS SHEET 7A OF 10
WS777	CUT-OFF WALL SEWER CROSSING DETAILS SHEET 8 OF 10
WS777A	CUT-OFF WALL SEWER CROSSING DETAILS SHEET 8A OF 10
WS778	CUT-OFF WALL SEWER CROSSING DETAILS SHEET 9 OF 10
WS778A	CUT-OFF WALL SEWER CROSSING DETAILS SHEET 9A OF 10
WS779	CUT-OFF WALL SEWER CROSSING DETAILS SHEET 10 OF 10
WS779A	CUT-OFF WALL SEWER CROSSING DETAILS SHEET 10A OF 10
WS780	CUT-OFF WALL SEWER CROSSING SCHEDULE
WS790	WATERFRONT ESPLANADE LONGITUDINAL WALL PROFILE SHEET 1 OF 5
WS791	WATERFRONT ESPLANADE LONGITUDINAL WALL PROFILE SHEET 2 OF 5
WS792	WATERFRONT ESPLANADE LONGITUDINAL WALL PROFILE SHEET 3 OF 5
WS793	WATERFRONT ESPLANADE LONGITUDINAL WALL PROFILE SHEET 4 OF 5
WS794	WATERFRONT ESPLANADE LONGITUDINAL WALL PROFILE SHEET 5 OF 5
WS800	SOUTH EMBAYMENT DETAILED PLAN
WS801	NORTH EMBAYMENT DETAILED PLAN
WS802	EMBAYMENT TYPICAL DETAILS SHEET 1 OF 3
WS803	EMBAYMENT TYPICAL DETAILS SHEET 2 OF 3
WS804	EMBAYMENT TYPICAL DETAILS SHEET 3 OF 3
WS810	SOUTH EMBAYMENT PILE-SUPPORTED PLATFORM DETAILS SHEET 1 OF 4
WS811	SOUTH EMBAYMENT PILE-SUPPORTED PLATFORM DETAILS SHEET 2 OF 4
WS812	SOUTH EMBAYMENT PILE-SUPPORTED PLATFORM DETAILS SHEET 3 OF 4
WS813	SOUTH EMBAYMENT PILE-SUPPORTED PLATFORM DETAILS SHEET 4 OF 4
WS814	NORTH EMBAYMENT PILE-SUPPORTED PLATFORM DETAILS SHEET 1 OF 4
WS815	NORTH EMBAYMENT PILE-SUPPORTED PLATFORM DETAILS SHEET 2 OF 4

DWG NO.	SHEET TITLE
WS816	NORTH EMBAYMENT PILE-SUPPORTED PLATFORM DETAILS SHEET 3 OF 4
WS817	NORTH EMBAYMENT PILE-SUPPORTED PLATFORM DETAILS SHEET 4 OF 4
WS818	PILE-SUPPORTED PLATFORM TYPICAL DETAILS
WS850	CUT-OFF WALL L WALL PLATFORM 1 PILE PLAN
WS851	CUT-OFF WALL L WALL PLATFORM 1 REINFORCEMENT
WS852	CUT-OFF WALL L WALL PLATFORM 1 DETAILS 1 OF 2
WS853	CUT-OFF WALL L WALL PLATFORM 1 DETAILS 2 OF 2
WS860	CUT-OFF WALL L WALL PLATFORM 2 PILE PLAN
WS861	CUT-OFF WALL L WALL PLATFORM 2 REINFORCEMENT
WS862	CUT-OFF WALL L WALL PLATFORM 2 DEATAILS 1 OF 3
WS863	CUT-OFF WALL L WALL PLATFORM 2 DETAILS 2 OF 3
WS864	CUT-OFF WALL L WALL PLATFORM 2 DETAILS 3 OF 3
WS870	CUT-OFF WALL L WALL PLATFORM 3 PILE PLAN
WS871	CUT-OFF WALL L WALL PLATFORM 3 REINFORCEMENT
WS871A	CUT-OFF WALL L WALL PLATFORM 3 REINFORCEMENT (SHEET 1A OF 1)
WS872	CUT-OFF WALL L WALL PLATFORM 3 DETAILS 1 OF 3
WS873	CUT-OFF WALL L WALL PLATFORM 3 DETAILS 2 OF 3
WS874	CUT-OFF WALL L WALL PLATFORM 3 DETAILS 3 OF 3
WS874A	CUT-OFF WALL L WALL PLATFORM 3 DETAILS 3A OF 3
WS874B	CUT-OFF WALL L WALL PLATFORM 3 DETAILS 3B OF 3
WS880	CUT-OFF WALL L WALL PLATFORM 4 PILE PLAN
WS881	CUT-OFF WALL L WALL PLATFORM 4 REINFORCEMENT
WS882	CUT-OFF WALL L WALL PLATFORM 4 DETAILS 1 OF 4
WS883	CUT-OFF WALL L WALL PLATFORM 4 DETAILS 2 OF 4
WS884	CUT-OFF WALL L WALL PLATFORM 4 DETAILS 3 OF 4
WS885	CUT-OFF WALL L WALL PLATFORM 4 DETAILS 4 OF 4
WS885A	CUT-OFF WALL L WALL PLATFORM 5 PILE PLAN
WS885B	CUT-OFF WALL L WALL PLATFORM 5 REINFORCEMENT
WS885C	CUT-OFF WALL L WALL PLATFORM 5 DETAILS 1 OF 2
WS885D	CUT-OFF WALL L WALL PLATFORM 5 DETAILS 2 OF 2
WS900	ESPLANADE CATHODIC PROTECTION SYSTEM PARTIAL PLANS
WS901	ESPLANADE CATHODIC PROTECTION SYSTEM DETAILS SECTIONS
WS902	ESPLANADE CATHODIC PROTECTION SYSTEM DETAILS SECTIONS

DWG NO.	SHEET TITLE
WS903	ESPLANADE CATHODIC PROTECTION SCHEDULE
WS903A	WATERFRONT ESPLANADE LIGHTING FOUNDATION DETAILS SHEET 1 OF 20
WS903B	WATERFRONT ESPLANADE LIGHTING FOUNDATION DETAILS SHEET 2 OF 20
WS903C	WATERFRONT ESPLANADE LIGHTING FOUNDATION DETAILS SHEET 3 OF 20
WS903D	WATERFRONT ESPLANADE LIGHTING FOUNDATION DETAILS SHEET 4 OF 20
WS903E	WATERFRONT ESPLANADE LIGHTING FOUNDATION DETAILS SHEET 5 OF 20
WS903F	WATERFRONT ESPLANADE LIGHTING FOUNDATION DETAILS SHEET 6 OF 20
WS903G	WATERFRONT ESPLANADE LIGHTING FOUNDATION DETAILS SHEET 7 OF 20
WS903H	WATERFRONT ESPLANADE LIGHTING FOUNDATION DETAILS SHEET 8 OF 20
WS903I	WATERFRONT ESPLANADE LIGHTING FOUNDATION DETAILS SHEET 9 OF 20
WS903J	WATERFRONT ESPLANADE LIGHTING FOUNDATION DETAILS SHEET 10 OF 20
WS903K	WATERFRONT ESPLANADE LIGHTING FOUNDATION DETAILS SHEET 11 OF 20
WS903L	WATERFRONT ESPLANADE LIGHTING FOUNDATION DETAILS SHEET 12 OF 20
WS903M	WATERFRONT ESPLANADE LIGHTING FOUNDATION DETAILS SHEET 13 OF 20
WS903N	WATERFRONT ESPLANADE LIGHTING FOUNDATION DETAILS SHEET 14 OF 20
WS903O	WATERFRONT ESPLANADE LIGHTING FOUNDATION DETAILS SHEET 15 OF 20
WS903P	WATERFRONT ESPLANADE LIGHTING FOUNDATION DETAILS SHEET 16 OF 20
WS903Q	WATERFRONT ESPLANADE LIGHTING FOUNDATION DETAILS SHEET 17 OF 20
WS903R	WATERFRONT ESPLANADE LIGHTING FOUNDATION DETAILS SHEET 18 OF 20
WS903S	WATERFRONT ESPLANADE LIGHTING FOUNDATION DETAILS SHEET 19 OF 20

DWG NO.	SHEET TITLE
WS903T	WATERFRONT ESPLANADE LIGHTING FOUNDATION DETAILS SHEET 20 OF 20
B-WS-001	RECORD OF BORINGS - WATERFRONT STRUCTURE BORINGS - SHEET 1 OF 15
B-WS-002	RECORD OF BORINGS - WATERFRONT STRUCTURE BORINGS - SHEET 2 OF 15
B-WS-003	RECORD OF BORINGS - WATERFRONT STRUCTURE BORINGS - SHEET 3 OF 15
B-WS-004	RECORD OF BORINGS - WATERFRONT STRUCTURE BORINGS - SHEET 4 OF 15
B-WS-005	RECORD OF BORINGS - WATERFRONT STRUCTURE BORINGS - SHEET 5 OF 15
B-WS-006	RECORD OF BORINGS - WATERFRONT STRUCTURE BORINGS - SHEET 6 OF 15
B-WS-007	RECORD OF BORINGS - WATERFRONT STRUCTURE BORINGS - SHEET 7 OF 15
B-WS-008	RECORD OF BORINGS - WATERFRONT STRUCTURE BORINGS - SHEET 8 OF 15
B-WS-009	RECORD OF BORINGS - WATERFRONT STRUCTURE BORINGS - SHEET 9 OF 15
B-WS-010	RECORD OF BORINGS - WATERFRONT STRUCTURE BORINGS - SHEET 10 OF 15
B-WS-011	RECORD OF BORINGS - WATERFRONT STRUCTURE BORINGS - SHEET 11 OF 15
B-WS-012	RECORD OF BORINGS - WATERFRONT STRUCTURE BORINGS - SHEET 12 OF 15
B-WS-013	RECORD OF BORINGS - WATERFRONT STRUCTURE BORINGS - SHEET 13 OF 15
B-WS-014	RECORD OF BORINGS - WATERFRONT STRUCTURE BORINGS - SHEET 14 OF 15
B-WS-015	RECORD OF BORINGS - WATERFRONT STRUCTURE BORINGS - SHEET 15 OF 15
FM300	MONOLITH PLAN SEGMENT 1 - REACH A STA. 9+07 - 16+91 SHEET 1 OF 2
FM301	MONOLITH PLAN SEGMENT 1 - REACH A STA. 9+07 - 16+91 SHEET 2 OF 2
FM302	MONOLITH PLAN SEGMENT 1 - REACH B STA. 16+91 - 23+82 SHEET 1 OF 2
FM303	MONOLITH PLAN SEGMENT 1 - REACH B STA. 16+91 - 23+82 SHEET 2 OF 2

DWG NO.	SHEET TITLE
FM304	MONOLITH PLAN SEGMENT 1 - REACH C STA. 23+82 - 30+44
FM305	MONOLITH PLAN SEGMENT 3 - REACH J STA. 86+64 - 96+28
FM306	MONOLITH PLAN SEGMENT 3 - REACH K STA. 96+28 - 102+34 SHEET 1 OF 2
FM307	MONOLITH PLAN SEGMENT 3 - REACH K STA. 96+28 - 102+34 SHEET 2 OF 2
FM700	CONCRETE I-WALL CAP REINFORCING
FM701	I-WALL MONOLITH SECTIONS AND DETAILS - SHEET 1 OF 12
FM702	I-WALL MONOLITH SECTIONS AND DETAILS - SHEET 2 OF 12
FM703	I-WALL MONOLITH SECTIONS AND DETAILS - SHEET 3 OF 12
FM704	I-WALL MONOLITH SECTIONS AND DETAILS - SHEET 4 OF 12
FM705	I-WALL MONOLITH SECTIONS AND DETAILS - SHEET 5 OF 12
FM706	I-WALL MONOLITH SECTIONS AND DETAILS - SHEET 6 OF 12
FM707	I-WALL MONOLITH SECTIONS AND DETAILS - SHEET 7 OF 12
FM708	I-WALL MONOLITH SECTIONS AND DETAILS - SHEET 8 OF 12
FM709	I-WALL MONOLITH SECTIONS AND DETAILS - SHEET 9 OF 12
FM710	I-WALL MONOLITH SECTIONS AND DETAILS - SHEET 10 OF 12
FM711	I-WALL MONOLITH SECTIONS AND DETAILS - SHEET 11 OF 12
FM712	I-WALL MONOLITH SECTIONS AND DETAILS - SHEET 12 OF 12
FM713	I-WALL MONOLITH - SHEET PILE BEND DETAILS
FM714	I-WALL MONOLITH - MISCELLANEOUS DETAILS 1 OF 4
FM715	I-WALL MONOLITH - MISCELLANEOUS DETAILS 2 OF 4
FM716	I-WALL MONOLITH - MISCELLANEOUS DETAILS 3 OF 4
FM717	I-WALL MONOLITH - MISCELLANEOUS DETAILS 4 OF 4
FG000	FLOOD GATES TABLE OF CONTENTS
FG001	CLOSURE STRUCTURES SCHEDULE AND GENERAL NOTES
FG100	CLOSURE FOUNDATION MONTGOMERY ST ROLLER GATE GENERAL PLAN
FG101	CLOSURE FOUNDATION MONTGOMERY ST ROLLER GATE GATE MONOLITH LAYOUT PLAN
FG102	CLOSURE FOUNDATION MONTGOMERY ST ROLLER GATE ELEVATION
FG103	CLOSURE STRUCTURES MONTGOMERY ST ROLLER GATE SECTIONS AND DETAILS
FG104	CLOSURE FOUNDATION MONTGOMERY ST ROLLER GATE GATE MONOLITH LAYOUT AND PLAN
FG107	CLOSURE FOUNDATION MONTGOMERY ST ROLLER GATE GATE MONOLITH PILE SCHEDULE

DWG NO.	SHEET TITLE
FG108	CLOSURE STRUCTURES MONTGOMERY ST ROLLER GATE MONOLITH ELEVATION
FG109	CLOSURE STRUCTURES MONTGOMERY ST ROLLER GATE MONOLITH SECTIONS
FG110	CLOSURE STRUCTURES MONTGOMERY ST ROLLER GATE MONOLITH SECTIONS
FG110A	CLOSURE STRUCTURES MONTGOMERY ST ROLLER GATE MONOLITH SECTIONS
FG122	MONTGOMERY STREET ROLLER GATE - GATE FABRICATION CLOSE ELEVATION
FG123	MONTGOMERY STREET ROLLER GATE - GATE FABRICATION OPEN ELEVATION
FG124	MONTGOMERY STREET ROLLER GATE - GATE FABRICATION TRACK PLAN
FG125	MONTGOMERY STREET ROLLER GATE - GATE FABRICATION SECTIONS
FG130	MONTGOMERY ST AND SOUTH ST RECONSTRUCTION PLAN
FG131	MONTGOMERY ST AND SOUTH ST RECONSTRUCTION PROFILES SHEET 1 OF 2
FG132	MONTGOMERY ST AND SOUTH ST RECONSTRUCTION PROFILES SHEET 2 OF 2
FG133	MONTGOMERY ST AND SOUTH ST ROADWAY RECONSTRUCTION DETAILS
FG134	MONTGOMERY ST PARKING LOT RECONSTRUCTION PLAN
FG135	MONTGOMERY ST PARKING LOT PROFILE, EAST SIDE
FG136	MONTGOMERY ST PARKING LOT PROFILE, WEST SIDE
FG137	MONTGOMERY ST PARKING LOT SECTION AND DETAILS
FG138	MONTGOMERY ST PARKING LOT PROPOSED STRIPING AND FENCING PLAN
FG139	MONTGOMERY ST PARKING LOT STRIPING PLAN
FG150	CLOSURE STRUCTURES PIER 42 SWING GATE GENERAL
FG151	CLOSURE STRUCTURES PIER 42 SWING GATE BARRIER PLAN DETAILS
FG155	CLOSURE STRUCTURES PIER 42 SWING GATE SECTIONS
FG156	CLOSURE STRUCTURES PIER 42 SWING GATE MONOLITH PILE LAYOUT AND SECTIONS
FG157	CLOSURE STRUCTURES PIER 42 SWING GATE MONOLITH AND COLUMN SECTIONS SHEET 1 OF 2

DWG NO.	SHEET TITLE
FG158	CLOSURE STRUCTURES PIER 42 SWING GATE MONOLITH AND COLUMN SECTIONS SHEET 2 OF 2
FG158A	CLOSURE STRUCTURES PIER 42 SWING GATE MONOLITH AND COLUMN SECTIONS SHEET 2A OF 2
FG160	PIER 42 SWING GATE - GATE FABRICATION CLOSE ELEVATION
FG161	PIER 42 SWING GATE - GATE FABRICATION OPEN ELEVATION
FG162	PIER 42 SWING GATE - GATE FABRICATION SECTIONS
FG163	PIER 42 SWING GATE - GATE FABRICATION SECTION AND DETAILS
FG170	PIER 42 FDR DRIVE RAMP/ ROADWAY AND SIDEWALK RECONSTRUCTION PLAN
FG171	PIER 42 FDR DRIVE RAMP/ REGRADING PROFILES SHEET 1 OF 2
FG172	PIER 42 FDR DRIVE RAMP/ REGRADING PROFILES SHEET 2 OF 2
FG173	PIER 42 FDR DRIVE RAMP/ ROADWAY RECONSTRUCTION DETAILS
FG200	CLOSURE FOUNDATION FDR DRIVE SWING GATES GENERAL PLAN
FG201	CLOSURE STRUCTURES FDR DRIVE SWING GATES PLAN SHEET 1 OF 2
FG202	CLOSURE STRUCTURES FDR DRIVE SWING GATES PLAN SHEET 2 OF 2
FG203	CLOSURE STRUCTURES FDR DRIVE SWING GATES MEDIAN PARTIAL PLAN SHEET 1 OF 2
FG204	CLOSURE STRUCTURES FDR DRIVE SWING GATES MEDIAN PARTIAL PLAN SHEET 2 OF 2
FG206	CLOSURE FOUNDATION FDR DRIVE SWING GATES SECTIONS AND DETAILS
FG207	CLOSURE STRUCTURES FDR DRIVE SWING GATES MONOLITH PILE LAYOUT AND SECTIONS
FG208	CLOSURE STRUCTURES FDR DRIVE SWING GATES SECTIONS AND DETAILS SHEET 1 OF 4
FG209	CLOSURE STRUCTURES FDR DRIVE SWING GATES SECTIONS AND DETAILS SHEET 2 OF 4
FG210	CLOSURE STRUCTURES FDR DRIVE SWING GATES SECTIONS AND DETAILS SHEET 3 OF 4
FG211	CLOSURE STRUCTURES FDR DRIVE SWING GATES SECTIONS AND DETAILS SHEET 4 OF 4
FG211A	CLOSURE STRUCTURES FDR DRIVE SWING GATES SECTIONS AND DETAILS SHEET 4A OF 4
FG230	FDR DRIVE SWING GATE SOUTH BOUND - GATE FABRICATION CLOSED ELEVATION

DWG NO.	SHEET TITLE
FG231	FDR DRIVE SWING GATE SOUTH BOUND - GATE FABRICATION OPEN ELEVATION
FG232	FDR DRIVE SWING GATE SOUTH BOUND - GATE FABRICATION SECTIONS
FG233	FDR DRIVE SWING GATE SOUTH BOUND - GATE FABRICATION SECTION AND DETAILS
FG234	FDR DRIVE SWING GATE NORTH BOUND - GATE FABRICATION CLOSED ELEVATION
FG235	FDR DRIVE SWING GATE NORTH BOUND - GATE FABRICATION OPEN ELEVATION
FG236	FDR DRIVE SWING GATE NORTH BOUND - GATE FABRICATION SECTIONS
FG240	FDR DRIVE SWING GATE ROADWAY RECONSTRUCTION PLAN
FG241	FDR DRIVE SWING GATE SOUTHBOUND REGRADING PROFILES
FG242	FDR DRIVE SWING GATE NORTHBOUND REGRADING PROFILE SHEET 1 OF 3
FG243	FDR DRIVE SWING GATE NORTHBOUND REGRADING PROFILE SHEET 2 OF 3
FG244	FDR DRIVE SWING GATE NORTHBOUND REGRADING PROFILE SHEET 3 OF 3
FG245	FDR DRIVE CROSSING/ ROADWAY RECONSTRUCTION DETAILS SHEET 1 OF 2
FG246	FDR DRIVE CROSSING/ ROADWAY RECONSTRUCTION DETAILS SHEET 2 OF 2
FG260	PEDESTRIAN SWING GATES - GATE FABRICATION CLOSED ELEVATION
FG261	PEDESTRIAN SWING GATES - GATE FABRICATION OPEN ELEVATION
FG262	PEDESTRIAN SWING GATES - GATE FABRICATION SECTIONS
FG270	CLOSURE STRUCTURES 14TH STREET CROSSING GENERAL PLAN
FG271	CLOSURE STRUCTURES 14TH STREET CROSSING ELEVATION AND SECTIONS
FG272	CLOSURE STRUCTURES 14TH STREET CROSSING GATE PILE LAYOUT AND MONOLITH PLAN
FG273	CLOSURE STRUCTURES 14TH STREET ROLLER GATE MONOLITH & COLUMN DETAILS SHEET 1 OF 3
FG274	CLOSURE STRUCTURES 14TH STREET ROLLER GATE MONOLITH & COLUMN DETAILS SHEET 2 OF 3
FG275	CLOSURE STRUCTURES 14TH STREET ROLLER GATE MONOLITH & COLUMN DETAILS SHEET 3 OF 3
FG275A	CLOSURE STRUCTURES 14TH STREET ROLLER GATE MONOLITH & COLUMN DETAILS SHEET 3A OF 3

DWG NO.	SHEET TITLE
FG282	14TH STREET CROSSING ROLLER GATE - GATE FABRICATION CLOSE ELEVATION
FG283	14TH STREET CROSSING ROLLER GATE - GATE FABRICATION OPEN ELEVATION
FG284	14TH STREET CROSSING ROLLER GATE - GATE FABRICATION TRACK PLAN
FG285	14TH STREET CROSSING ROLLER GATE - GATE FABRICATION SECTIONS
FG290	14TH STREET CROSSING/ ROADWAY REGRADING PLAN
FG291	14TH STREET CROSSING/ ROADWAY REGRADING PROFILES SHEET 1 OF 2
FG292	14TH STREET CROSSING/ ROADWAY REGRADING PROFILES SHEET 2 OF 2
FG293	14TH STREET CROSSING/ ROADWAY RECONSTRUCTION DETAILS
FG700	FLOOD GATES - STANDARD DETAILS - SHEET 1 OF 21
FG700A	FLOOD GATES - STANDARD DETAILS - SHEET 1A OF 21
FG700B	FLOOD GATES - STANDARD DETAILS - SHEET 1B OF 21
FG700C	FLOOD GATES - STANDARD DETAILS - SHEET 1C OF 21
FG700D	FLOOD GATES - STANDARD DETAILS - SHEET 1D OF 21
FG700E	FLOOD GATES - STANDARD DETAILS - SHEET 1E OF 21
FG700F	FLOOD GATES - STANDARD DETAILS - SHEET 1F OF 21
FG701	FLOOD GATES - STANDARD DETAILS - SHEET 2 OF 21
FG702	FLOOD GATES - STANDARD DETAILS - SHEET 3 OF 21
FG703	FLOOD GATES - STANDARD DETAILS - SHEET 4 OF 21
FG704	FLOOD GATES - STANDARD DETAILS - SHEET 5 OF 21
FG705	FLOOD GATES - STANDARD DETAILS - SHEET 6 OF 21
FG706	FLOOD GATES - STANDARD DETAILS - SHEET 7 OF 21
FG707	FLOOD GATES - STANDARD DETAILS - SHEET 8 OF 21
FG708	FLOOD GATES - STANDARD DETAILS - SHEET 9 OF 21
FG709	FLOOD GATES - STANDARD DETAILS - SHEET 10 OF 21
FG710	FLOOD GATES - STANDARD DETAILS - SHEET 11 OF 21
FG711	FLOOD GATES - STANDARD DETAILS - SHEET 12 OF 21
FG712	FLOOD GATES - STANDARD DETAILS - SHEET 13 OF 21
FG713	FLOOD GATES - STANDARD DETAILS - SHEET 14 OF 21
FG714	FLOOD GATES - STANDARD DETAILS - SHEET 15 OF 21
FG715	FLOOD GATES - STANDARD DETAILS - SHEET 16 OF 21
FG716	FLOOD GATES - STANDARD DETAILS - SHEET 17 OF 21

DWG NO.	SHEET TITLE
FG717	FLOOD GATES - STANDARD DETAILS - SHEET 18 OF 21
FG718	FLOOD GATES - STANDARD DETAILS - SHEET 19 OF 21
FG719	FLOOD GATES - STANDARD DETAILS - SHEET 20 OF 21
FG720	FLOOD GATES - STANDARD DETAILS - SHEET 21 OF 21
FG721	FLOOD GATES - PEDESTRIAN GATE LATCHING DETAILS - SHEET 1 OF 2
FG722	FLOOD GATES - PEDESTRIAN GATE LATCHING DETAILS - SHEET 2 OF 2
FGA100	FLOOD GATE FINISH SCHEDULE AND ELEVATION DETAIL
FGA101	FLOOD GATE FINISH DETAILS
FGA102	FLOOD GATE FINISH ELEVATIONS GATE 01 - GATE 06
DS000	DEP SEWERS TABLE OF CONTENTS
DS001	DEP SEWERS GENERAL NOTES
DS100	DEP SEWER DEMOLITION PLAN SEGMENT 1 - REACH A STA. 9+07 - 16+91
DS101	DEP SEWER DEMOLITION PLAN SEGMENT 1 - REACH B STA. 16+91 - 23+82
DS102	DEP SEWER DEMOLITION PLAN SEGMENT 1 - REACH C STA. 23+82 - 30+44
DS103	DEP SEWER DEMOLITION PLAN SEGMENT 1 - REACH D STA. 30+44 - 39+99
DS104	DEP SEWER DEMOLITION PLAN SEGMENT 1 - REACH E STA. 39+99 - 49+94
DS105	DEP SEWER DEMOLITION PLAN SEGMENT 2 - REACH F STA. 49+94 - 58+67
DS106	DEP SEWER DEMOLITION PLAN SEGMENT 2 - REACH G STA. 58+67 - 69+33
DS107	DEP SEWER DEMOLITION PLAN SEGMENT 2 - REACH H STA. 69+33 - 77+58
DS108	DEP SEWER DEMOLITION PLAN SEGMENT 3 - REACH I STA. 77+58 - 86+64
DS109	DEP SEWER DEMOLITION PLAN SEGMENT 3 - REACH J STA. 86+64 - 96+28
DS110	DEP SEWER DEMOLITION PLAN SEGMENT 3 - REACH K STA. 96+28 - 102+34
DS300	DEP SEWER PLAN SEGMENT 1 - REACH A STA. 9+07 - 16+91
DS301	DEP SEWER PLAN SEGMENT 1 - REACH B STA. 16+91 - 23+82
DS302	DEP SEWER PLAN SEGMENT 1 - REACH C STA. 23+82 - 30+44
DS303	DEP SEWER PLAN SEGMENT 1 - REACH D STA. 30+44 - 39+99

DWG NO.	SHEET TITLE
DS304	DEP SEWER PLAN SEGMENT 1 - REACH E STA. 39+99 - 49+94
DS305	DEP SEWER PLAN SEGMENT 2 - REACH F STA. 49+94 - 58+67
DS306	DEP SEWER PLAN SEGMENT 2 - REACH G STA. 58+67 - 69+33
DS307	DEP SEWER PLAN SEGMENT 2 - REACH H STA. 69+33 - 77+58
DS308	DEP SEWER PLAN SEGMENT 3 - REACH I STA. 77+58 - 86+64
DS309	DEP SEWER PLAN SEGMENT 3 - REACH J STA. 86+64 - 96+28
DS310	DEP SEWER PLAN SEGMENT 3 - REACH K STA. 96+28 - 102+34
DS400	DEP SEWER PLAN AND PROFILE - MH-A18 THROUGH MH-B01 SHEET 1 OF 4
DS401	DEP SEWER PLAN AND PROFILE - MH-A18 THROUGH MH-B01 SHEET 2 OF 4
DS402	DEP SEWER PLAN AND PROFILE - MH-A18 THROUGH MH-B01 SHEET 3 OF 4
DS403	DEP SEWER PLAN AND PROFILE - MH-A18 THROUGH MH-B01 SHEET 4 OF 4
DS404	DEP SEWER PLAN AND PROFILE - MH-C5 TO NCM-70
DS405	DEP SEWER PLAN AND PROFILE - MH-D01 TO JC-D02
DS406	DEP SEWER PLAN AND PROFILE - MH-D02 TO NCM-059
DS407	DEP SEWER PLAN AND PROFILE - MH-E01 TO JC-D01
DS408	DEP SEWER PLAN AND PROFILE - MH-E05 TO NCM-028
DS409	DEP SEWER PLAN AND PROFILE - MH-F01 TO NCM-058
DS410	DEP SEWER PLAN AND PROFILE - MH-F05 TO NCM-057
DS411	DEP SEWER PLAN AND PROFILE - MH-G01 TO NCM-020
DS412	DEP SEWER PLAN AND PROFILE - MH-G03 TO NCM-056
DS413	DEP SEWER PLAN AND PROFILE - MH-H01 TO NCM-055
DS414	DEP SEWER PLAN AND PROFILE - MH-H07 TO NCM-054
DS415	DEP SEWER PLAN AND PROFILE - MH-I04 TO NCM-053
DS416	DEP SEWER PLAN AND PROFILE - M-25 TO M-24
DS417	DEP SEWER PLAN AND PROFILE - M-26 TO MH-E04
DS418	DEP SEWER PLAN AND PROFILE - MH-E03 TO MH-E04
DS419	DEP SEWER PLAN AND PROFILE - MH-E04 TO MH-F04
DS420	DEP SEWER PLAN AND PROFILE - MH-F04 TO M-32
DS421	DEP SEWER PLAN AND PROFILE - M-33 TO MH-I03
DS422	DEP SEWER PLAN AND PROFILE - MH-BI-01 TO MH-I03
DS423	DEP SEWER PLAN AND PROFILE - MH-I03 TO M-35
DS424	DEP SEWER PLAN AND PROFILE BRANCH INTERCEPTOR CROSS SECTIONS

DWG NO.	SHEET TITLE
DS425	DEP SEWER CROSS SECTIONS (SHEET 1 OF 4)
DS426	DEP SEWER CROSS SECTIONS (SHEET 2 OF 4)
DS427	DEP SEWER CROSS SECTIONS (SHEET 3 OF 4)
DS428	DEP SEWER CROSS SECTIONS (SHEET 4 OF 4)
DS500	DIVERSION AND TIDE GATE M-25 PLAN & SECTION SHEET 1 OF 3
DS501	DIVERSION AND TIDE GATE M-25 PLAN & SECTION SHEET 2 OF 3
DS502	DIVERSION AND TIDE GATE M-25 PLAN & SECTION SHEET 3 OF 3
DS503	REGULATOR M-26 PLAN & SECTION SHEET 1 OF 4
DS504	REGULATOR M-26 PLAN & SECTION SHEET 2 OF 4
DS505	REGULATOR M-26 PLAN & SECTION SHEET 3 OF 4
DS506	REGULATOR M-26 PLAN & SECTION SHEET 4 OF 4
DS507	TIDEGATE M-28 PLAN & SECTION SHEET 1 OF 2
DS508	TIDEGATE M-28 PLAN & SECTION SHEET 2 OF 2
DS509	REGULATOR M-29 PLAN & SECTION SHEET 1 OF 4
DS510	REGULATOR M-29 PLAN & SECTION SHEET 2 OF 4
DS511	REGULATOR M-29 PLAN & SECTION SHEET 3 OF 4
DS512	REGULATOR M-29 PLAN & SECTION SHEET 4 OF 4
DS513	REGULATOR M-30 PLAN & SECTION SHEET 1 OF 4
DS514	REGULATOR M-30 PLAN & SECTION SHEET 2 OF 4
DS515	REGULATOR M-30 PLAN & SECTION SHEET 3 OF 4
DS516	REGULATOR M-30 PLAN & SECTION SHEET 4 OF 4
DS517	TIDEGATE M-31 PLAN & SECTION SHEET 1 OF 2
DS518	TIDEGATE M-31 PLAN & SECTION SHEET 2 OF 2
DS519	REGULATOR M-32 PLAN & SECTION SHEET 1 OF 4
DS520	REGULATOR M-32 PLAN & SECTION SHEET 2 OF 4
DS521	REGULATOR M-32 PLAN & SECTION SHEET 3 OF 4
DS522	REGULATOR M-32 PLAN & SECTION SHEET 4 OF 4
DS523	REGULATOR M-33 PLAN & SECTION SHEET 1 OF 4
DS524	REGULATOR M-33 PLAN & SECTION SHEET 2 OF 4
DS525	REGULATOR M-33 PLAN & SECTION SHEET 3 OF 4
DS526	REGULATOR M-33 PLAN & SECTION SHEET 4 OF 4
DS527	REGULATOR M-34 PLAN & SECTION SHEET 1 OF 4
DS528	REGULATOR M-34 PLAN & SECTION SHEET 2 OF 4
DS529	REGULATOR M-34 PLAN & SECTION SHEET 3 OF 4
DS530	REGULATOR M-34 PLAN & SECTION SHEET 4 OF 4
DS531	REGULATOR M-35 PLAN & SECTION SHEET 1 OF 4

DWG NO.	SHEET TITLE
DS532	REGULATOR M-35 PLAN & SECTION SHEET 2 OF 4
DS533	REGULATOR M-35 PLAN & SECTION SHEET 3 OF 4
DS534	REGULATOR M-35 PLAN & SECTION SHEET 4 OF 4
DS535	JUNCTION CHAMBER JC-D01 DETAILS SHEET 1 OF 2
DS536	JUNCTION CHAMBER JC-D01 DETAILS SHEET 2 OF 2
DS537	JUNCTION CHAMBER JC-G01 DETAILS SHEET 1 OF 2
DS538	JUNCTION CHAMBER JC-G01 DETAILS SHEET 2 OF 2
DS550	PONTOON GATE DETAILS
DS551	SLUICE GATE DETAILS
DS552	MISCELLANEOUS CASTING DETAILS
DS553	MISCELLANEOUS SEWER DETAILS
DS600	OUTFALL NCM-060 - PLAN AND ELEVATION
DS601	OUTFALL NCM-059 - PLAN AND ELEVATION
DS602	OUTFALL NCM-028 - PLAN AND ELEVATION
DS603	OUTFALL NCM-058 - PLAN AND ELEVATION
DS604	OUTFALL NCM-057 - PLAN AND ELEVATION
DS605	OUTFALL NCM-020 - PLAN AND ELEVATION
DS606	OUTFALL NCM-056 - PLAN AND ELEVATION
DS607	OUTFALL NCM-055 - PLAN AND ELEVATION
DS608	OUTFALL NCM-054 - PLAN AND ELEVATION
DS609	OUTFALL NCM-053 - PLAN AND ELEVATION
DS700	EXISTING MANHOLE DETAILS
DS701	MANHOLE FLOODPROOFING DETAILS SHEET 1 OF 2
DS702	MANHOLE FLOODPROOFING DETAILS SHEET 2 OF 2
DS703	MANHOLE SCHEDULE SHEET 1 OF 2
DS704	MANHOLE SCHEDULE SHEET 2 OF 2
DS705	GENERAL DETAILS
DS706	PROPOSED MANHOLE DETAILS - TYPE R (MODIFIED C-2/D-2)
DS707	PROPOSED MANHOLE DETAILS - TYPE R (MODIFIED C-2)
DS708	PROPOSED MANHOLE DETAILS - TYPE R (MODIFIED TYPE II)
DS710	PROPOSED MANHOLE CONNECTION DETAIL MH-C03
DS711	PROPOSED MANHOLE CONNECTION DETAIL MH-D01
DS712	PROPOSED MANHOLE CONNECTION DETAIL MH-D02
DS713	PROPOSED MANHOLE CONNECTION DETAIL MH-E01
DS714	PROPOSED MANHOLE CONNECTION DETAIL MH-E05
DS715	PROPOSED MANHOLE CONNECTION DETAIL MH-F01

DWG NO.	SHEET TITLE
DS716	PROPOSED MANHOLE CONNECTION DETAIL MH-F05
DS717	PROPOSED MANHOLE CONNECTION DETAIL MH-G01
DS718	PROPOSED MANHOLE CONNECTION DETAIL MH-G03
DS719	PROPOSED MANHOLE CONNECTION DETAIL MH-H01
DS720	PROPOSED MANHOLE CONNECTION DETAIL MH-H07
DS721	PROPOSED MANHOLE CONNECTION DETAIL MH-I05
DS800	5'-0"X4'-0" COMBINED SEWER FOUNDATION PLAN
DS801	42" COMBINED SEWER FOUNDATION PLAN
DS802	3'-0"x5'-7" & 12'-0"x4'-0" COMBINED SEWER FOUNDATION PLAN
DS803	5'-7"x5'-7" COMBINED SEWER FOUNDATION PLAN
DS804	8'-0"x4'-0" COMBINED SEWER FOUNDATION PLAN
DS805	8'-0"x4'-7" COMBINED SEWER FOUNDATION PLAN
DS806	8'-0"x5'-0" COMBINED SEWER FOUNDATION PLAN
DS807	12'-0"x4'-7" & 3'-0"x5'-7" COMBINED SEWER FOUNDATION PLAN
DS808	7'-0"x6'-0" COMBINED SEWER FOUNDATION PLAN
DS809	54" COMBINED SEWER FOUNDATION PLAN
DS810	11'-0"x5'-0" COMBINED SEWER FOUNDATION PLAN
DS811	10'-0"x5'-0" COMBINED SEWER FOUNDATION PLAN
DS812	12" BRANCH INTERCEPTOR FOUNDATION PLAN
DS813	30" BRANCH INTERCEPTOR FOUNDATION PLAN SHEET 1 OF 2
DS814	30" BRANCH INTERCEPTOR FOUNDATION PLAN SHEET 2 OF 2
DS815	60" BRANCH INTERCEPTOR FOUNDATION PLAN
DS816	48" BRANCH INTERCEPTOR FOUNDATION PLAN
DS817	36" BRANCH INTERCEPTOR FOUNDATION PLAN
DS818	42" BRANCH INTERCEPTOR FOUNDATION PLAN SHEET 1 OF 2
DS819	42" BRANCH INTERCEPTOR FOUNDATION PLAN SHEET 2 OF 2
DS820	24" BRANCH INTERCEPTOR FOUNDATION PLAN
DS821	42" BRANCH INTERCEPTOR FOUNDATION PLAN
DS822	30" BRANCH INTERCEPTOR FOUNDATION PLAN
DS823	36" BRANCH INTERCEPTOR FOUNDATION PLAN
DS830	PILE BENT DETAILS SHEET 1 OF 3
DS831	PILE BENT DETAILS SHEET 2 OF 3
DS832	PILE BENT DETAILS SHEET 3 OF 3
B-DS-001	RECORD OF BORINGS (2017) - REACH D - SHEET 1 OF 2
B-DS-002	RECORD OF BORINGS (2017) - REACH D - SHEET 2 OF 2
B-DS-003	RECORD OF BORINGS (2017) - REACH E - SHEET 1 OF 2

DWG NO.	SHEET TITLE
B-DS-004	RECORD OF BORINGS (2017) - REACH E - SHEET 2 OF 2
B-DS-005	RECORD OF BORINGS (2017) - REACH F - SHEET 1 OF 2
B-DS-006	RECORD OF BORINGS (2017) - REACH F - SHEET 2 OF 2
B-DS-007	RECORD OF BORINGS (2017) - REACH G - SHEET 1 OF 2
B-DS-008	RECORD OF BORINGS (2017) - REACH G - SHEET 2 OF 2
B-DS-009	RECORD OF BORINGS (2017) - REACH H - SHEET 1 OF 2
B-DS-010	RECORD OF BORINGS (2017) - REACH H - SHEET 2 OF 2
B-DS-011	RECORD OF BORINGS (2019) - REACH C SHEET 1 OF 2
B-DS-012	RECORD OF BORINGS (2019) - REACH C SHEET 2 OF 2
B-DS-013	RECORD OF BORINGS (2019) - REACH D SHEET 1 OF 4
B-DS-014	RECORD OF BORINGS (2019) - REACH D SHEET 2 OF 4
B-DS-015	RECORD OF BORINGS (2019) - REACH D SHEET 3 OF 4
B-DS-016	RECORD OF BORINGS (2019) - REACH D SHEET 4 OF 4
B-DS-017	RECORD OF BORINGS (2019) - REACH E SHEET 1 OF 5
B-DS-018	RECORD OF BORINGS (2019) - REACH E SHEET 2 OF 5
B-DS-019	RECORD OF BORINGS (2019) - REACH E SHEET 3 OF 5
B-DS-020	RECORD OF BORINGS (2019) - REACH E SHEET 4 OF 5
B-DS-021	RECORD OF BORINGS (2019) - REACH E SHEET 5 OF 5
B-DS-022	RECORD OF BORINGS (2019) - REACH F SHEET 1 OF 5
B-DS-023	RECORD OF BORINGS (2019) - REACH F SHEET 2 OF 5
B-DS-024	RECORD OF BORINGS (2019) - REACH F SHEET 3 OF 5
B-DS-025	RECORD OF BORINGS (2019) - REACH F SHEET 4 OF 5
B-DS-026	RECORD OF BORINGS (2019) - REACH F SHEET 5 OF 5
B-DS-027	RECORD OF BORINGS (2019) - REACH G SHEET 1 OF 6
B-DS-028	RECORD OF BORINGS (2019) - REACH G SHEET 2 OF 6
B-DS-029	RECORD OF BORINGS (2019) - REACH G SHEET 3 OF 6
B-DS-030	RECORD OF BORINGS (2019) - REACH G SHEET 4 OF 6
B-DS-031	RECORD OF BORINGS (2019) - REACH G SHEET 5 OF 6
B-DS-032	RECORD OF BORINGS (2019) - REACH G SHEET 6 OF 6
B-DS-033	RECORD OF BORINGS (2019) - REACH H SHEET 1 OF 4
B-DS-034	RECORD OF BORINGS (2019) - REACH H SHEET 2 OF 4
B-DS-035	RECORD OF BORINGS (2019) - REACH H SHEET 3 OF 4
B-DS-036	RECORD OF BORINGS (2019) - REACH H SHEET 4 OF 4
B-DS-037	RECORD OF BORINGS (2019) - REACH I SHEET 1 OF 5
B-DS-038	RECORD OF BORINGS (2019) - REACH I SHEET 2 OF 5
B-DS-039	RECORD OF BORINGS (2019) - REACH I SHEET 3 OF 5

DWG NO.	SHEET TITLE
B-DS-040	RECORD OF BORINGS (2019) - REACH I SHEET 4 OF 5
B-DS-041	RECORD OF BORINGS (2019) - REACH I SHEET 5 OF 5
CU300	CIVIL UTILITY PLAN SEGMENT 1 - REACH A STA. 9+07 - 16+91
CU301	CIVIL UTILITY PLAN SEGMENT 1 - REACH B STA. 16+91 - 23+82
CU302	CIVIL UTILITY PLAN SEGMENT 1 - REACH C STA. 23+82 - 30+44
CU309	CIVIL UTILITY PLAN SEGMENT 3 - REACH J STA. 86+64 - 96+28
CU310	CIVIL UTILITY PLAN SEGMENT 4 - REACH K STA. 96+28 - 102+34
DM-100.00	AMPHITHEATER DEMOLITION COVER SHEET & GENERAL NOTES
DM-101.00	AMPHITHEATER DEMOLITION EXISITING CONDITIONS PLAN SURVEY
DM-102.00	AMPHITHEATER DEMOLITION DEMOLITION PLAN
DM-103.00	AMPHITHEATER DEMOLITION BLANK
DM-104.00	AMPHITHEATER DEMOLITION BLANK
DM-300.00	TENNIS HOUSE DEMOLITION COVER SHEET & GENERAL NOTES
DM-301.00	TENNIS HOUSE DEMOLITION EXISITING CONDITIONS PLAN SURVEY
DM-302.00	TENNIS HOUSE DEMOLITION DEMOLITION PLAN
DM-303.00	TENNIS HOUSE DEMOLITION BLANK
DM-304.00	TENNIS HOUSE DEMOLITION BLANK
DM-305.00	TENNIS HOUSE DEMOLITION BLANK
DM-306.00	TENNIS HOUSE DEMOLITION BLANK
DM-400.00	TRACK HOUSE DEMOLITION COVER SHEET & GENERAL NOTES
DM-401.00	TRACK HOUSE DEMOLITION EXISITING CONDITIONS PLAN SURVEY
DM-402.00	TRACK HOUSE DEMOLITION DEMOLITION PLAN
DM-403.00	TRACK HOUSE DEMOLITION BLANK
DM-404.00	TRACK HOUSE DEMOLITION BLANK
DM-405.00	TRACK HOUSE DEMOLITION BLANK
DM-700.00	COMFORT STATION DEMOLITION COVER SHEET & GENERAL NOTES
DM-701.00	COMFORT STATION DEMOLITION EXISITING CONDITIONS PLAN SURVEY
DM-702.00	COMFORT STATION DEMOLITION DEMOLITION PLAN
DM-703.00	COMFORT STATION DEMOLITION BLANK
DM-704.00	COMFORT STATION DEMOLITION BLANK
PD000	PARK DEMOLITION TABLE OF CONTENTS
PDT100	PARK DEMOLITION - TREE REMOVALS & PROTECTION PLAN SEGMENT 1 - REACH A STA. 9+07 - 16+91
PDT101	PARK DEMOLITION - TREE REMOVALS & PROTECTION PLAN SEGMENT 1 - REACH B STA. 16+91 - 23+82

DWG NO.	SHEET TITLE
PDT102	PARK DEMOLITION - TREE REMOVALS & PROTECTION PLAN SEGMENT 1 - REACH C STA. 23+82 - 30+44
PDT103	PARK DEMOLITION - TREE REMOVALS & PROTECTION PLAN SEGMENT 1 - REACH D STA. 30+44 - 39+99
PDT104	PARK DEMOLITION - TREE REMOVALS & PROTECTION PLAN SEGMENT 1 - REACH E STA. 39+99 - 49+94
PDT105	PARK DEMOLITION - TREE REMOVALS & PROTECTION PLAN SEGMENT 2 - REACH F STA. 49+94 - 58+64
PDT106	PARK DEMOLITION - TREE REMOVALS & PROTECTION PLAN SEGMENT 2 - REACH G STA. 58+64 - 69+33
PDT107	PARK DEMOLITION - TREE REMOVALS & PROTECTION PLAN SEGMENT 2 - REACH H STA. 69+33 - 77+58
PDT108	PARK DEMOLITION - TREE REMOVALS & PROTECTION PLAN SEGMENT 3 - REACH I STA. 77+58 - 86+64
PDT109	PARK DEMOLITION - TREE REMOVALS & PROTECTION PLAN SEGMENT 3 - REACH J STA. 86+64 - 96+28
PDT110	PARK DEMOLITION - TREE REMOVALS & PROTECTION PLAN SEGMENT 3 - REACH K STA. 96+28 - 97+50
PDS001	PARK DEMOLITION - SITE PLAN GENERAL NOTES
PDS100	PARK DEMOLITION - SITE PLAN SEGMENT 1 - REACH A STA. 9+07 - 16+91
PDS101	PARK DEMOLITION - SITE PLAN SEGMENT 1 - REACH B STA. 16+91 - 23+82
PDS102	PARK DEMOLITION - SITE PLAN SEGMENT 1 - REACH C STA. 23+82 - 30+44
PDS103	PARK DEMOLITION - SITE PLAN SEGMENT 1 - REACH D STA. 30+44 - 39+99
PDS104	PARK DEMOLITION - SITE PLAN SEGMENT 1 - REACH E STA. 39+99 - 49+94
PDS105	PARK DEMOLITION - SITE PLAN SEGMENT 2 - REACH F STA. 49+94 - 58+64
PDS106	PARK DEMOLITION - SITE PLAN SEGMENT 2 - REACH G STA. 58+64 - 69+33
PDS107	PARK DEMOLITION - SITE PLAN SEGMENT 2 - REACH H STA. 69+33 - 77+58
PDS108	PARK DEMOLITION - SITE PLAN SEGMENT 3 - REACH I STA. 77+58 - 86+64
PDS109	PARK DEMOLITION - SITE PLAN SEGMENT 3 - REACH J STA. 86+64 - 96+28

DWG NO.	SHEET TITLE
PDS110	PARK DEMOLITION - SITE PLAN SEGMENT 3 - REACH K STA. 96+28 - 97+50
PDS120	PARK DEMOLITION - SITE PLAN ENLARGEMENT - GOUVERNEUR GARDENS
PDD102	PARK DEMOLITION - DRAINAGE & SANITARY PLAN SEGMENT 1 - REACH C STA. 23+82 - 30+44
PDD103	PARK DEMOLITION - DRAINAGE & SANITARY PLAN SEGMENT 1 - REACH D STA. 30+44 - 39+99
PDD104	PARK DEMOLITION - DRAINAGE & SANITARY PLAN SEGMENT 1 - REACH E STA. 39+99 - 49+94
PDD105	PARK DEMOLITION - DRAINAGE & SANITARY PLAN SEGMENT 2 - REACH F STA. 49+94 - 58+67
PDD106	PARK DEMOLITION - DRAINAGE & SANITARY PLAN SEGMENT 2 - REACH G STA. 58+67 - 69+33
PDD107	PARK DEMOLITION - DRAINAGE & SANITARY PLAN SEGMENT 2 - REACH H STA. 69+33 - 77+58
PDD108	PARK DEMOLITION - DRAINAGE & SANITARY PLAN SEGMENT 3 - REACH I STA. 77+58 - 86+64
PDD109	PARK DEMOLITION - DRAINAGE & SANITARY PLAN SEGMENT 3 - REACH J STA. 86+64 - 96+28
PDE001	EAST RIVER PARK EXISTING SITE ELECTRICAL SERVICE PLAN
PDE100	PARK DEMOLITION - ELECTRICAL PLAN SEGMENT 1 - REACH A STA. 9+07 - 16+91
PDE101	PARK DEMOLITION - ELECTRICAL PLAN SEGMENT 1 - REACH B STA. 16+91 - 23+82
PDE102	PARK DEMOLITION - ELECTRICAL PLAN SEGMENT 1 - REACH C STA. 23+82 - 30+44
PDE103	PARK DEMOLITION - ELECTRICAL PLAN SEGMENT 1 - REACH D STA. 30+44 - 39+96
PDE104	PARK DEMOLITION - ELECTRICAL PLAN SEGMENT 1 - REACH E STA. 39+96 - 49+91
PDE105	PARK DEMOLITION - ELECTRICAL PLAN SEGMENT 2 - REACH F STA. 49+91 - 58+94
PDE106	PARK DEMOLITION - ELECTRICAL PLAN SEGMENT 2 - REACH G STA. 58+94 - 69+33
PDE107	PARK DEMOLITION - ELECTRICAL PLAN SEGMENT 2 - REACH H STA. 69+33 - 77+86
PDE108	PARK DEMOLITION - ELECTRICAL PLAN SEGMENT 3 - REACH I STA. 77+86 - 86+97

DWG NO.	SHEET TITLE
PDE109	PARK DEMOLITION - ELECTRICAL PLAN SEGMENT 3 - REACH J STA. 86+97 - 91+88
PDE120	EXISTING ELECTRICAL VAULT DEMOLITION PLANS AT AMPHITHEATER AND FIELD 1 &2
PDE130	EXISTING DMS NO. 1 AT JACKSON STREET PLAN
PDE131	EXISTING DMS NO. 1 AT JACKSON STREET ELEVATION
PDE140	EXISTING DMS NO. 2 AT 10TH STREET BRIDGE PLAN
PDE141	EAST 10TH STREET BRIDGE DMS NO. 2 AND DOT ITS EQUIPMENT DEMOLITION
PDP001	EAST RIVER PARK EXISTING SITE GAS SERVICE PLAN
PDP002	EAST RIVER PARK EXISTING SITE WATER SERVICE PLAN
PDP100	PARK DEMOLITION - PLUMBING PLAN SEGMENT 1 - REACH A STA. 9+07 - 16+91
PDP101	PARK DEMOLITION - PLUMBING PLAN SEGMENT 1 - REACH B STA. 16+91 - 23+82
PDP102	PARK DEMOLITION - PLUMBING PLAN SEGMENT 1 - REACH C STA. 23+82 - 30+44
PDP103	PARK DEMOLITION - PLUMBING PLAN SEGMENT 1 - REACH D STA. 30+44 - 39+96
PDP104	PARK DEMOLITION - PLUMBING PLAN SEGMENT 1 - REACH E STA. 39+96 - 49+91
PDP105	PARK DEMOLITION - PLUMBING PLAN SEGMENT 2 - REACH F STA. 49+91 - 58+94
PDP106	PARK DEMOLITION - PLUMBING PLAN SEGMENT 2 - REACH G STA. 58+94 - 69+33
PDP107	PARK DEMOLITION - PLUMBING PLAN SEGMENT 2 - REACH H STA. 69+33 - 77+86
PDP108	PARK DEMOLITION - PLUMBING PLAN SEGMENT 3 - REACH I STA. 77+86 - 86+97
PDP109	PARK DEMOLITION - PLUMBING PLAN SEGMENT 3 - REACH J STA. 86+97 - 91+88
PDPI100	PARK DEMOLITION - IRRIGATION PLAN SEGMENT 1 - REACH A STA. 9+07 - 16+91
PDPI101	PARK DEMOLITION - IRRIGATION PLAN SEGMENT 1 - REACH B STA. 16+91 - 23+82
PDPI102	PARK DEMOLITION - IRRIGATION PLAN SEGMENT 1 - REACH C STA. 23+82 - 30+44
PDPI103	PARK DEMOLITION - IRRIGATION PLAN SEGMENT 1 - REACH D STA. 30+44 - 39+96

DWG NO.	SHEET TITLE
PDPI104	PARK DEMOLITION - IRRIGATION PLAN SEGMENT 1 - REACH E STA. 39+96 - 49+91
PDPI105	PARK DEMOLITION - IRRIGATION PLAN SEGMENT 2 - REACH F STA. 49+91 - 58+94
PDPI106	PARK DEMOLITION - IRRIGATION PLAN SEGMENT 2 - REACH G STA. 58+94 - 69+33
PDPI107	PARK DEMOLITION - IRRIGATION PLAN SEGMENT 2 - REACH H STA. 69+33 - 77+86
PDPI108	PARK DEMOLITION - IRRIGATION PLAN SEGMENT 3 - REACH I STA. 77+86 - 86+97
PDPI109	PARK DEMOLITION - IRRIGATION PLAN SEGMENT 3 - REACH J STA. 86+97 - 91+88
LG300	SITE GRADING PLAN SEGMENT 1 - REACH A STA. 9+07 - 16+91
LG301	SITE GRADING PLAN SEGMENT 1 - REACH B STA. 16+91 - 23+82
LG302	SITE GRADING PLAN SEGMENT 1 - REACH C STA. 23+82 - 30+44
LG303	SITE GRADING PLAN SEGMENT 1 - REACH D STA. 30+44 - 39+99
LG304	SITE GRADING PLAN SEGMENT 1 - REACH E STA. 39+99 - 49+94
LG305	SITE GRADING PLAN SEGMENT 2 - REACH F STA. 49+94 - 58+67
LG306	SITE GRADING PLAN SEGMENT 2 - REACH G STA. 58+67 - 69+33
LG307	SITE GRADING PLAN SEGMENT 2 - REACH H STA. 69+33 - 77+58
LG308	SITE GRADING PLAN SEGMENT 3 - REACH I STA. 77+58 - 86+64
LG309	SITE GRADING PLAN SEGMENT 3 - REACH J STA. 86+64 - 96+28
LG310	SITE GRADING PLAN SEGMENT 3 - REACH K STA. 96+28 - 102+34
LG320	SITE GRADING PLAN ENLARGEMENT - GOUVERNEUR GARDENS
LG321	SITE GRADING PLAN ENLARGEMENT
LG322	SITE GRADING PLAN ENLARGEMENT
LG323	SITE GRADING PLAN ENLARGEMENT
LG324	SITE GRADING PLAN ENLARGEMENT
PUD001	PARK UTILITIES - DRAINAGE & SANITARY PIPE SCHEDULE SHEET 1 OF 2
PUD002	PARK UTILITIES - DRAINAGE & SANITARY PIPE SCHEDULE SHEET 2 OF 2
PUD003	PARK UTILITIES - DRAINAGE & SANITARY STRUCTURE SCHEDULE SHEET 1 OF 2
PUD004	PARK UTILITIES - DRAINAGE & SANITARY STRUCTURE SCHEDULE SHEET 2 OF 2
PUD300	PARK UTILITIES - DRAINAGE & SANITARY PLAN SEGMENT 1 - REACH A STA. 9+07 - 16+91

DWG NO.	SHEET TITLE
PUD301	PARK UTILITIES - DRAINAGE & SANITARY PLAN SEGMENT 1 - REACH B STA. 16+91 - 23+82
PUD302	PARK UTILITIES - DRAINAGE & SANITARY PLAN SEGMENT 1 - REACH C STA. 23+82 - 30+44
PUD303	PARK UTILITIES - DRAINAGE & SANITARY PLAN SEGMENT 1 - REACH D STA. 30+44 - 39+99
PUD304	PARK UTILITIES - DRAINAGE & SANITARY PLAN SEGMENT 1 - REACH E STA. 39+99 - 49+94
PUD305	PARK UTILITIES - DRAINAGE & SANITARY PLAN SEGMENT 2 - REACH F STA. 49+94 - 58+67
PUD306	PARK UTILITIES - DRAINAGE & SANITARY PLAN SEGMENT 2 - REACH G STA. 58+67 - 69+33
PUD307	PARK UTILITIES - DRAINAGE & SANITARY PLAN SEGMENT 2 - REACH H STA. 69+33 - 77+58
PUD308	PARK UTILITIES - DRAINAGE & SANITARY PLAN SEGMENT 3 - REACH I STA. 77+58 - 86+64
PUD309	PARK UTILITIES - DRAINAGE & SANITARY PLAN SEGMENT 3 - REACH J STA. 86+64 - 96+28
PUD400	PARK UTILITIES - DRAINAGE & SANITARY PROFILE P100 SERIES
PUD401	PARK UTILITIES - DRAINAGE & SANITARY PROFILE P200 SERIES
PUD402	PARK UTILITIES - DRAINAGE & SANITARY PROFILE P300 & P3000 SERIES SHEET 1 OF 2
PUD403	PARK UTILITIES - DRAINAGE & SANITARY PROFILE P300 & P3000 SERIES SHEET 2 OF 2
PUD404	PARK UTILITIES - DRAINAGE & SANITARY PROFILE P400 SERIES
PUD405	PARK UTILITIES - DRAINAGE & SANITARY PROFILE P4000 & P40 SERIES SHEET 1 OF 2
PUD406	PARK UTILITIES - DRAINAGE & SANITARY PROFILE P4000 & P40 SERIES SHEET 2 OF 2
PUD407	PARK UTILITIES - DRAINAGE & SANITARY PROFILE P5000 SERIES
PUD408	PARK UTILITIES - DRAINAGE & SANITARY PROFILE P600 SERIES
PUD409	PARK UTILITIES - DRAINAGE & SANITARY PROFILE P6000 SERIES SHEET 1 OF 2
PUD410	PARK UTILITIES - DRAINAGE & SANITARY PROFILE P6000 SERIES SHEET 2 OF 2
PUD411	PARK UTILITIES - DRAINAGE & SANITARY PROFILE P7000 SERIES
PUD412	PARK UTILITIES - DRAINAGE & SANITARY PROFILE P900 SERIES
PUD413	PARK UTILITIES - DRAINAGE & SANITARY PROFILE P1000 SERIES
PUD414	PARK UTILITIES - DRAINAGE & SANITARY PROFILE P10000 SERIES

DWG NO.	SHEET TITLE
PUD415	PARK UTILITIES - DRAINAGE & SANITARY PROFILE P1100 SERIES
PUD416	PARK UTILITIES - DRAINAGE & SANITARY PROFILE P11000 SERIES
PUD417	PARK UTILITIES - DRAINAGE & SANITARY PROFILE P12000 & 12100 SERIES
PUD418	PARK UTILITIES - DRAINAGE & SANITARY PROFILE P1300 SERIES
PUD700	PARK UTILITIES - DRAINAGE & SANITARY DETAILS
PUD701	PARK UTILITIES - DRAINAGE & SANITARY DETAILS
PUD702	PARK UTILITIES - DRAINAGE & SANITARY DETAILS
PUD703	PARK UTILITIES - DRAINAGE & SANITARY DETAILS
PUD704	PARK UTILITIES - DRAINAGE & SANITARY DETAILS
PUD705	PARK UTILITIES - DRAINAGE & SANITARY DETAILS
PUD706	PARK UTILITIES - DRAINAGE & SANITARY DETAILS
PUD707	PARK UTILITIES - DRAINAGE & SANITARY DETAILS
L000	SITE LAYOUT, LANDSCAPING & PARK UTILITIES TABLE OF CONTENTS
L001	SITE LAYOUT, LANDSCAPING & PARK UTILITIES TABLE OF CONTENTS
L002	SITE LAYOUT, LANDSCAPING & PARK UTILITIES TABLE OF CONTENTS
L003	SITE LAYOUT, LANDSCAPING & PARK UTILITIES TABLE OF CONTENTS
L004	SITE LAYOUT, LANDSCAPING & PARK UTILITIES TABLE OF CONTENTS
L005	SITE LAYOUT, LANDSCAPING & PARK UTILITIES TABLE OF CONTENTS
LL001	SITE LAYOUT SCHEDULE
LL002	SITE LAYOUT SCHEDULE
LL003	SITE LAYOUT SCHEDULE
LL004	SITE LAYOUT SCHEDULE
LL005	SITE LAYOUT SCHEDULE
LL006	SITE LAYOUT SCHEDULE
LL007	SITE LAYOUT SCHEDULE
LL008	SITE LAYOUT SCHEDULE
LL009	SITE LAYOUT SCHEDULE
LL010	SITE LAYOUT SCHEDULE
LL011	SITE LAYOUT SCHEDULE
LL012	SITE LAYOUT SCHEDULE
LL013	SITE LAYOUT SCHEDULE
LL014	SITE LAYOUT SCHEDULE
LL015	SITE LAYOUT SCHEDULE
LL016	SITE LAYOUT SCHEDULE
LL017	SITE LAYOUT SCHEDULE

DWG NO.	SHEET TITLE
LL018	SITE LAYOUT SCHEDULE
LL019	SITE LAYOUT SCHEDULE
LL020	SITE LAYOUT SCHEDULE
LL021	SITE LAYOUT SCHEDULE
LL022	SITE LAYOUT SCHEDULE
LL023	SITE LAYOUT SCHEDULE
LL024	SITE LAYOUT SCHEDULE
LL025	SITE LAYOUT SCHEDULE
LL026	SITE LAYOUT SCHEDULE
LL027	SITE LAYOUT SCHEDULE
LL028	SITE LAYOUT SCHEDULE
LL029	SITE LAYOUT SCHEDULE
LL030	SITE LAYOUT SCHEDULE
LL300	SITE LAYOUT PLAN SEGMENT 1 - REACH A STA. 9+07 - 16+91
LL301	SITE LAYOUT PLAN SEGMENT 1 - REACH B STA. 16+91 - 23+82
LL302	SITE LAYOUT PLAN SEGMENT 1 - REACH C STA. 23+82 - 30+44
LL303	SITE LAYOUT PLAN SEGMENT 1 - REACH D STA. 30+44 - 39+99
LL304	SITE LAYOUT PLAN SEGMENT 1 - REACH E STA. 39+99 - 49+94
LL305	SITE LAYOUT PLAN SEGMENT 2 - REACH F STA. 49+94 - 58+67
LL306	SITE LAYOUT PLAN SEGMENT 2 - REACH G STA. 58+67 - 69+33
LL307	SITE LAYOUT PLAN SEGMENT 2 - REACH H STA. 69+33 - 77+58
LL308	SITE LAYOUT PLAN SEGMENT 3 - REACH I STA. 77+58 - 86+64
LL309	SITE LAYOUT PLAN SEGMENT 3 - REACH J STA. 86+64 - 96+28
LL310	SITE LAYOUT PLAN SEGMENT 3 - REACH K STA. 96+28 - 102+34
LL320	SITE LAYOUT PLAN ENLARGEMENT - GOUVERNEUR GARDENS
LLP001	SITE LAYOUT - SHARED USE PATH GEOMETRIC PLAN CURVE & TANGENT DATA TABLE
LLP200	SITE LAYOUT - SHARED USE PATH TYPICAL SECTIONS
LLP201	SITE LAYOUT - SHARED USE PATH TYPICAL SECTIONS
LLP300	SITE LAYOUT - SHARED USE PATH PLAN SEGMENT 1 - REACH A STA. 9+07 - 16+91
LLP301	SITE LAYOUT - SHARED USE PATH PLAN SEGMENT 1 - REACH B STA. 16+91 - 23+82
LLP302	SITE LAYOUT - SHARED USE PATH PLAN SEGMENT 1 - REACH C STA. 23+82 - 30+44
LLP303	SITE LAYOUT - SHARED USE PATH PLAN SEGMENT 1 - REACH D STA. 30+44 - 39+99

DWG NO.	SHEET TITLE
LLP304	SITE LAYOUT - SHARED USE PATH PLAN SEGMENT 1 - REACH E STA. 39+99 - 49+94
LLP305	SITE LAYOUT - SHARED USE PATH PLAN SEGMENT 2 - REACH F STA. 49+94 - 58+67
LLP306	SITE LAYOUT - SHARED USE PATH PLAN SEGMENT 2 - REACH G STA. 58+67 - 69+33
LLP307	SITE LAYOUT - SHARED USE PATH PLAN SEGMENT 2 - REACH H STA. 69+33 - 77+58
LLP308	SITE LAYOUT - SHARED USE PATH PLAN SEGMENT 3 - REACH I STA. 77+58 - 86+64
LLP309	SITE LAYOUT - SHARED USE PATH PLAN SEGMENT 3 - REACH J STA. 86+64 - 96+28
LLP400	SITE LAYOUT - SHARED USE PATH PROFILE EAST RIVER PARK WEST EDGE
LLP401	SITE LAYOUT - SHARED USE PATH PROFILE EAST RIVER PARK EAST EDGE
LLP402	SITE LAYOUT - SHARED USE PATH PROFILE EAST RIVER PARK WEST EDGE
LLP403	SITE LAYOUT - SHARED USE PATH PROFILE EAST RIVER PARK EAST EDGE
LLP404	SITE LAYOUT - SHARED USE PATH PROFILE EAST RIVER PARK WEST EDGE
LLP405	SITE LAYOUT - SHARED USE PATH PROFILE EAST RIVER PARK EAST EDGE
LLP406	SITE LAYOUT - SHARED USE PATH PROFILE EAST RIVER PARK WEST EDGE
LLP407	SITE LAYOUT - SHARED USE PATH PROFILE EAST RIVER PARK EAST EDGE
LLP408	SITE LAYOUT - SHARED USE PATH PROFILE EAST RIVER PARK WEST EDGE
LLP409	SITE LAYOUT - SHARED USE PATH PROFILE EAST RIVER PARK EAST EDGE
LLP410	SITE LAYOUT - SHARED USE PATH PROFILE EAST RIVER PARK WEST EDGE
LLP411	SITE LAYOUT - SHARED USE PATH PROFILE EAST RIVER PARK EAST EDGE
LLP412	SITE LAYOUT - SHARED USE PATH PROFILE EAST RIVER PARK WEST EDGE
LLP413	SITE LAYOUT - SHARED USE PATH PROFILE EAST RIVER PARK EAST EDGE

DWG NO.	SHEET TITLE
LLP414	SITE LAYOUT - SHARED USE PATH PROFILE CORLEARS HOOK BRIDGE UNDERPASS CENTERLINE
LLP415	SITE LAYOUT - SHARED USE PATH PROFILE CORLEARS HOOK BRIDGE UNDERPASS WEST EDGE
LLP416	SITE LAYOUT - SHARED USE PATH PROFILE EAST 10TH STREET BRIDGE UNDERPASS WEST EDGE
LLP417	SITE LAYOUT - SHARED USE PATH PROFILE EAST 10TH STREET BRIDGE UNDERPASS EAST EDGE
LL500	SITE LAYOUT ENLARGEMENTS KEY PLAN
LL501	SITE LAYOUT ENLARGEMENT REACH A-1
LL502	SITE LAYOUT ENLARGEMENT REACH A-2
LL503	SITE LAYOUT ENLARGEMENT REACH B-1
LL504	SITE LAYOUT ENLARGEMENT REACH B-2
LL505	SITE LAYOUT ENLARGEMENT REACH C-1
LL506	SITE LAYOUT ENLARGEMENT REACH C-2
LL507	SITE LAYOUT ENLARGEMENT REACH C-3
LL508	SITE LAYOUT ENLARGEMENT REACH C-4
LL509	SITE LAYOUT ENLARGEMENT REACH C-5
LL510	SITE LAYOUT ENLARGEMENT REACH D-1
LL511	SITE LAYOUT ENLARGEMENT REACH D-2
LL512	SITE LAYOUT ENLARGEMENT REACH D-3
LL513	SITE LAYOUT ENLARGEMENT REACH D-4
LL514	SITE LAYOUT ENLARGEMENT REACH D-5
LL515	SITE LAYOUT ENLARGEMENT REACH D-7
LL516	SITE LAYOUT ENLARGEMENT REACH D-7
LL517	SITE LAYOUT ENLARGEMENT REACH D-8
LL518	SITE LAYOUT ENLARGEMENT REACH E-1
LL519	SITE LAYOUT ENLARGEMENT REACH E-2
LL520	SITE LAYOUT ENLARGEMENT REACH E-3
LL521	SITE LAYOUT ENLARGEMENT REACH E-4
LL522	SITE LAYOUT ENLARGEMENT REACH E-5
LL523	SITE LAYOUT ENLARGEMENT REACH E-7
LL524	SITE LAYOUT ENLARGEMENT REACH E-7
LL525	SITE LAYOUT ENLARGEMENT REACH E-8
LL526	SITE LAYOUT ENLARGEMENT REACH F-1
LL527	SITE LAYOUT ENLARGEMENT REACH F-2

DWG NO.	SHEET TITLE
LL528	SITE LAYOUT ENLARGEMENT REACH F-3
LL529	SITE LAYOUT ENLARGEMENT REACH F-4
LL530	SITE LAYOUT ENLARGEMENT REACH F-5
LL531	SITE LAYOUT ENLARGEMENT REACH F-7
LL532	SITE LAYOUT ENLARGEMENT REACH G-1
LL533	SITE LAYOUT ENLARGEMENT REACH G-2
LL534	SITE LAYOUT ENLARGEMENT REACH G-3
LL535	SITE LAYOUT ENLARGEMENT REACH G-4
LL536	SITE LAYOUT ENLARGEMENT REACH G-5
LL537	SITE LAYOUT ENLARGEMENT REACH G-7
LL538	SITE LAYOUT ENLARGEMENT REACH G-7
LL539	SITE LAYOUT ENLARGEMENT REACH G-8
LL540	SITE LAYOUT ENLARGEMENT REACH H-1
LL541	SITE LAYOUT ENLARGEMENT REACH H-2
LL542	SITE LAYOUT ENLARGEMENT REACH H-3
LL543	SITE LAYOUT ENLARGEMENT REACH H-4
LL544	SITE LAYOUT ENLARGEMENT REACH H-5
LL545	SITE LAYOUT ENLARGEMENT REACH H-7
LL546	SITE LAYOUT ENLARGEMENT REACH H-7
LL547	SITE LAYOUT ENLARGEMENT REACH H-8
LL548	SITE LAYOUT ENLARGEMENT REACH H-9
LL549	SITE LAYOUT ENLARGEMENT REACH I-1
LL550	SITE LAYOUT ENLARGEMENT REACH I-2
LL551	SITE LAYOUT ENLARGEMENT REACH I-3
LL552	SITE LAYOUT ENLARGEMENT REACH I-4
LL553	SITE LAYOUT ENLARGEMENT REACH I-5
LL554	SITE LAYOUT ENLARGEMENT REACH I-7
LL555	SITE LAYOUT ENLARGEMENT REACH I-7
LL556	SITE LAYOUT ENLARGEMENT REACH J-1
LL557	SITE LAYOUT ENLARGEMENT REACH J-2
LL558	SITE LAYOUT ENLARGEMENT REACH J-3
LL559	SITE LAYOUT ENLARGEMENT REACH J-4
LL560	SITE LAYOUT ENLARGEMENT REACH K-1
LM300	MATERIALS PLAN SEGMENT 1 - REACH A STA. 9+07 - 16+91
LM301	MATERIALS PLAN SEGMENT 1 - REACH B STA. 16+91 - 23+82
LM302	MATERIALS PLAN SEGMENT 1 - REACH C STA. 23+82 - 30+44

DWG NO.	SHEET TITLE
LM303	MATERIALS PLAN SEGMENT 1 - REACH D STA. 30+44 - 39+99
LM304	MATERIALS PLAN SEGMENT 1 - REACH E STA. 39+99 - 49+94
LM305	MATERIALS PLAN SEGMENT 2 - REACH F STA. 49+94 - 58+67
LM306	MATERIALS PLAN SEGMENT 2 - REACH G STA. 58+67 - 69+33
LM307	MATERIALS PLAN SEGMENT 2 - REACH H STA. 69+33 - 77+58
LM308	MATERIALS PLAN SEGMENT 3 - REACH I STA. 77+58 - 86+64
LM309	MATERIALS PLAN SEGMENT 3 - REACH J STA. 86+64 - 96+28
LM310	MATERIALS PLAN SEGMENT 3 - REACH K STA. 96+28 - 102+34
LM320	MATERIALS PLAN ENLARGEMENT - GOUVERNEUR GARDENS
LM330	PATH CONCRETE JOINTING PLAN
LM331	PATH CONCRETE JOINTING PLAN
LM332	PATH CONCRETE JOINTING PLAN
LM333	PATH CONCRETE JOINTING PLAN
LM334	PATH CONCRETE JOINTING PLAN
LM335	PATH CONCRETE JOINTING PLAN
LM336	PATH CONCRETE JOINTING PLAN
LM337	PATH CONCRETE JOINTING PLAN
LM338	PATH CONCRETE JOINTING PLAN
LM339	PATH CONCRETE JOINTING PLAN
LM340	PATH CONCRETE JOINTING PLAN
LM341	PATH CONCRETE JOINTING PLAN
LM342	PATH CONCRETE JOINTING PLAN
LM343	PATH CONCRETE JOINTING PLAN
LM344	PATH CONCRETE JOINTING PLAN
LM520	CURB, WALL, AND FENCE PLAN
LM521	CURB, WALL, AND FENCE PLAN
LM522	CURB, WALL, AND FENCE PLAN
LM523	CURB, WALL, AND FENCE PLAN
LM524	CURB, WALL, AND FENCE PLAN
LM525	CURB, WALL, AND FENCE PLAN
LM526	CURB, WALL, AND FENCE PLAN
LM527	CURB, WALL, AND FENCE PLAN
LM528	CURB, WALL, AND FENCE PLAN
LM529	CURB, WALL, AND FENCE PLAN
LM530	CURB, WALL, AND FENCE PLAN
LM531	CURB, WALL, AND FENCE PLAN

DWG NO.	SHEET TITLE
LM532	CURB, WALL, AND FENCE PLAN
LM533	CURB, WALL, AND FENCE PLAN
LM534	CURB, WALL, AND FENCE PLAN
LF001	FURNISHINGS PLAN SCHEDULE
LF002	FURNISHINGS PLAN SCHEDULE
LF003	FURNISHINGS PLAN SCHEDULE
LF300	FURNISHINGS PLAN SEGMENT 1 - REACH A STA. 9+07 - 16+91
LF301	FURNISHINGS PLAN SEGMENT 1 - REACH B STA. 16+91 - 23+82
LF302	FURNISHINGS PLAN SEGMENT 1 - REACH C STA. 23+82 - 30+44
LF303	FURNISHINGS PLAN SEGMENT 1 - REACH D STA. 30+44 - 39+99
LF304	FURNISHINGS PLAN SEGMENT 1 - REACH E STA. 39+99 - 49+94
LF305	FURNISHINGS PLAN SEGMENT 2 - REACH F STA. 49+94 - 58+67
LF306	FURNISHINGS PLAN SEGMENT 2 - REACH G STA. 58+67 - 69+33
LF307	FURNISHINGS PLAN SEGMENT 2 - REACH H STA. 69+33 - 77+58
LF308	FURNISHINGS PLAN SEGMENT 3 - REACH I STA. 77+58 - 86+64
LF309	FURNISHINGS PLAN SEGMENT 3 - REACH J STA. 86+64 - 96+28
LF310	FURNISHINGS PLAN SEGMENT 3 - REACH K STA. 96+28 - 102+34
LF320	FURNISHINGS PLAN ENLARGEMENT - GOUVERNEUR GARDENS
LSL300	SOILS PLAN SEGMENT 1 - REACH A STA. 9+07 - 16+91
LSL301	SOILS PLAN SEGMENT 1 - REACH B STA. 16+91 - 23+82
LSL302	SOILS PLAN SEGMENT 1 - REACH C STA. 23+82 - 30+44
LSL303	SOILS PLAN SEGMENT 1 - REACH D STA. 30+44 - 39+99
LSL304	SOILS PLAN SEGMENT 1 - REACH E STA. 39+99 - 49+94
LSL305	SOILS PLAN SEGMENT 2 - REACH F STA. 49+94 - 58+67
LSL306	SOILS PLAN SEGMENT 2 - REACH G STA. 58+67 - 69+33
LSL307	SOILS PLAN SEGMENT 2 - REACH H STA. 69+33 - 77+58
LSL308	SOILS PLAN SEGMENT 3 - REACH I STA. 77+58 - 86+64
LSL309	SOILS PLAN SEGMENT 3 - REACH J STA. 86+64 - 96+28
LSL310	SOILS PLAN SEGMENT 3 - REACH K STA. 96+28 - 102+34
LSL320	SOILS PLAN ENLARGEMENT - GOUVERNEUR GARDENS
LSL700	SOIL PROFILES
LSL701	SOIL PROFILES AND TREE DETAILS
LSL702	SOIL AND PLANTING DETAILS
LSL703	SOIL AND PLANTING DETAILS
LSL704	SOIL AND PLANTING DETAILS
LP001	PLANTING SCHEDULE

DWG NO.	SHEET TITLE
LP002	PLANTING SCHEDULE
LP003	PLANTING SCHEDULE
LP004	PLANTING SCHEDULE
LP005	PLANTING SCHEDULE
LP006	PLANTING SCHEDULE
LP007	PLANTING SCHEDULE
LP008	PLANTING SCHEDULE
LP009	PLANTING SCHEDULE
LP010	PLANTING SCHEDULE
LP011	PLANTING SCHEDULE
LP012	PLANTING SCHEDULE
LP013	PLANTING SCHEDULE
LP014	PLANTING SCHEDULE
LP015	PLANTING SCHEDULE
LP300	PLANTING PLAN SEGMENT 1 - REACH A STA. 9+07 - 16+91
LP301	PLANTING PLAN SEGMENT 1 - REACH B STA. 16+91 - 23+82
LP302	PLANTING PLAN SEGMENT 1 - REACH C STA. 23+82 - 30+44
LP303	PLANTING PLAN SEGMENT 1 - REACH D STA. 30+44 - 39+99
LP304	PLANTING PLAN SEGMENT 1 - REACH E STA. 39+99 - 49+94
LP305	PLANTING PLAN SEGMENT 2 - REACH F STA. 49+94 - 58+67
LP306	PLANTING PLAN SEGMENT 2 - REACH G STA. 58+67 - 69+33
LP307	PLANTING PLAN SEGMENT 2 - REACH H STA. 69+33 - 77+58
LP308	PLANTING PLAN SEGMENT 3 - REACH I STA. 77+58 - 86+64
LP309	PLANTING PLAN SEGMENT 3 - REACH J STA. 86+64 - 96+28
LP310	PLANTING PLAN SEGMENT 3 - REACH K STA. 96+28 - 102+34
LP320	PLANTING PLAN ENLARGEMENT - GOUVERNEUR GARDENS
LP500	PLANTING ENLARGEMENTS KEY PLAN
LP501	PLANTING ENLARGEMENT REACH A-1
LP502	PLANTING ENLARGEMENT REACH A-2
LP503	PLANTING ENLARGEMENT REACH B-1
LP504	PLANTING ENLARGEMENT REACH B-2
LP505	PLANTING ENLARGEMENT REACH C-1
LP506	PLANTING ENLARGEMENT REACH C-2
LP507	PLANTING ENLARGEMENT REACH C-3
LP508	PLANTING ENLARGEMENT REACH C-4
LP509	PLANTING ENLARGEMENT REACH C-5

DWG NO.	SHEET TITLE
LP510	PLANTING ENLARGEMENT REACH D-1
LP511	PLANTING ENLARGEMENT REACH D-2
LP512	PLANTING ENLARGEMENT REACH D-3
LP513	PLANTING ENLARGEMENT REACH D-4
LP514	PLANTING ENLARGEMENT REACH D-5
LP515	PLANTING ENLARGEMENT REACH D-7
LP516	PLANTING ENLARGEMENT REACH D-7
LP517	PLANTING ENLARGEMENT REACH D-8
LP518	PLANTING ENLARGEMENT REACH E-1
LP519	PLANTING ENLARGEMENT REACH E-2
LP520	PLANTING ENLARGEMENT REACH E-3
LP521	PLANTING ENLARGEMENT REACH E-4
LP522	PLANTING ENLARGEMENT REACH E-5
LP523	PLANTING ENLARGEMENT REACH E-7
LP524	PLANTING ENLARGEMENT REACH E-7
LP525	PLANTING ENLARGEMENT REACH E-8
LP526	PLANTING ENLARGEMENT REACH F-1
LP527	PLANTING ENLARGEMENT REACH F-2
LP528	PLANTING ENLARGEMENT REACH F-3
LP529	PLANTING ENLARGEMENT REACH F-4
LP530	PLANTING ENLARGEMENT REACH F-5
LP531	PLANTING ENLARGEMENT REACH F-7
LP532	PLANTING ENLARGEMENT REACH G-1
LP533	PLANTING ENLARGEMENT REACH G-2
LP534	PLANTING ENLARGEMENT REACH G-3
LP535	PLANTING ENLARGEMENT REACH G-4
LP536	PLANTING ENLARGEMENT REACH G-5
LP537	PLANTING ENLARGEMENT REACH G-7
LP538	PLANTING ENLARGEMENT REACH G-7
LP539	PLANTING ENLARGEMENT REACH G-8
LP540	PLANTING ENLARGEMENT REACH H-1
LP541	PLANTING ENLARGEMENT REACH H-2
LP542	PLANTING ENLARGEMENT REACH H-3
LP543	PLANTING ENLARGEMENT REACH H-4
LP544	PLANTING ENLARGEMENT REACH H-5
LP545	PLANTING ENLARGEMENT REACH H-7

DWG NO.	SHEET TITLE
LP546	PLANTING ENLARGEMENT REACH H-7
LP547	PLANTING ENLARGEMENT REACH H-8
LP548	PLANTING ENLARGEMENT REACH H-9
LP549	PLANTING ENLARGEMENT REACH I-1
LP550	PLANTING ENLARGEMENT REACH I-2
LP551	PLANTING ENLARGEMENT REACH I-3
LP552	PLANTING ENLARGEMENT REACH I-4
LP553	PLANTING ENLARGEMENT REACH I-5
LP554	PLANTING ENLARGEMENT REACH I-7
LP555	PLANTING ENLARGEMENT REACH I-7
LP556	PLANTING ENLARGEMENT REACH J-1
LP557	PLANTING ENLARGEMENT REACH J-2
LP558	PLANTING ENLARGEMENT REACH J-3
LP559	PLANTING ENLARGEMENT REACH J-4
LP560	PLANTING ENLARGEMENT REACH K-1
LPL001	TREE PLANTING LAYOUT SCHEDULE
LPL002	TREE PLANTING LAYOUT SCHEDULE
LPL003	TREE PLANTING LAYOUT SCHEDULE
LPL004	TREE PLANTING LAYOUT SCHEDULE
LPL005	TREE PLANTING LAYOUT SCHEDULE
LPL006	TREE PLANTING LAYOUT SCHEDULE
LPL007	TREE PLANTING LAYOUT SCHEDULE
LPL008	TREE PLANTING LAYOUT SCHEDULE
LPL009	TREE PLANTING LAYOUT SCHEDULE
LPL010	TREE PLANTING LAYOUT SCHEDULE
LPL300	TREE PLANTING LAYOUT PLAN
LPL301	TREE PLANTING LAYOUT PLAN
LPL302	TREE PLANTING LAYOUT PLAN
LPL303	TREE PLANTING LAYOUT PLAN
LPL304	TREE PLANTING LAYOUT PLAN
LPL305	TREE PLANTING LAYOUT PLAN
LPL306	TREE PLANTING LAYOUT PLAN
LPL307	TREE PLANTING LAYOUT PLAN
LPL308	TREE PLANTING LAYOUT PLAN
LPL309	TREE PLANTING LAYOUT PLAN
LPL310	TREE PLANTING LAYOUT PLAN

DWG NO.	SHEET TITLE
LT001	TREE MITIGATION SCHEDULE SHEET 1 OF 13
LT002	TREE MITIGATION SCHEDULE SHEET 2 OF 13
LT003	TREE MITIGATION SCHEDULE SHEET 3 OF 13
LT004	TREE MITIGATION SCHEDULE SHEET 4 OF 13
LT005	TREE MITIGATION SCHEDULE SHEET 5 OF 13
LT006	TREE MITIGATION SCHEDULE SHEET 6 OF 13
LT007	TREE MITIGATION SCHEDULE SHEET 7 OF 13
LT008	TREE MITIGATION SCHEDULE SHEET 8 OF 13
LT009	TREE MITIGATION SCHEDULE SHEET 9 OF 13
LT010	TREE MITIGATION SCHEDULE SHEET 10 OF 13
LT011	TREE MITIGATION SCHEDULE SHEET 11 OF 13
LT012	TREE MITIGATION SCHEDULE SHEET 12 OF 13
LT013	TREE MITIGATION SCHEDULE SHEET 13 OF 13
LS600	LANDSCAPE SECTIONS REACH A
LS601	LANDSCAPE SECTIONS REACH B
LS602	LANDSCAPE SECTIONS REACH C
LS603	LANDSCAPE SECTIONS REACH D
LS604A	LANDSCAPE SECTIONS REACH E SHEET 1 OF 2
LS604B	LANDSCAPE SECTIONS REACH E SHEET 2 OF 2
LS605	LANDSCAPE SECTIONS REACH F
LS606	LANDSCAPE SECTIONS REACH G
LS607	LANDSCAPE SECTIONS REACH H
LS608A	LANDSCAPE SECTIONS REACH I SHEET 1 OF 2
LS608B	LANDSCAPE SECTIONS REACH I SHEET 2 OF 2
LS609	LANDSCAPE SECTIONS REACH J
LD001	DETAIL NOTES
LD700	PAVING ENLARGEMENT - AMPHITHEATER
LD701	PAVING ENLARGEMENT - FITNESS
LD702	PAVING ENLARGEMENT - FITNESS
LD703	PAVING ENLARGEMENT - 10TH STREET PLAYGROUND
LD704	PAVING ENLARGEMENT - 10TH STREET PLAYGROUND
LD705	PAVING ENLARGEMENT - 10TH STREET PLAYGROUND
LD706	PAVING ENLARGEMENT - 10TH STREET PLAYGROUND
LD707	PAVING ENLARGEMENT - ESPLANADE
LD707B	PAVING ENLARGEMENT - ESPLANADE
LD708	PAVING ENLARGEMENT - ESPLANADE

DWG NO.	SHEET TITLE
LD708B	PAVING ENLARGEMENT - ESPLANADE
LD709	PAVING ENLARGEMENT - ESPLANADE
LD709B	PAVING ENLARGEMENT - ESPLANADE
LD710	PAVING ENLARGEMENT - ESPLANADE
LD710B	PAVING ENLARGEMENT - ESPLANADE
LD711	PAVING ENLARGEMENT - ESPLANADE
LD711B	PAVING ENLARGEMENT - ESPLANADE
LD712	PAVING ENLARGEMENT - ESPLANADE
LD712B	PAVING ENLARGEMENT - ESPLANADE
LD713	PAVING ENLARGEMENT - ESPLANADE
LD713B	PAVING ENLARGEMENT - ESPLANADE
LD714	PAVING ENLARGEMENT - ESPLANADE
LD714B	PAVING ENLARGEMENT - ESPLANADE
LD715	PAVING ENLARGEMENT - ESPLANADE
LD715B	PAVING ENLARGEMENT - ESPLANADE
LD716	PAVING ENLARGEMENT - ESPLANADE
LD716B	PAVING ENLARGEMENT - ESPLANADE
LD717	PAVING ENLARGEMENT - ESPLANADE
LD717B	PAVING ENLARGEMENT - ESPLANADE
LD718	PAVING ENLARGEMENT - ESPLANADE
LD718B	PAVING ENLARGEMENT - ESPLANADE
LD719	PAVING ENLARGEMENT - ESPLANADE
LD719B	PAVING ENLARGEMENT - ESPLANADE
LD720	PAVING ENLARGEMENT - ESPLANADE
LD720B	PAVING ENLARGEMENT - ESPLANADE
LD721	PAVING ENLARGEMENT - ESPLANADE
LD721B	PAVING ENLARGEMENT - ESPLANADE
LD722	PAVING ENLARGEMENT - ESPLANADE
LD722B	PAVING ENLARGEMENT - ESPLANADE
LD723	PAVING ENLARGEMENT - ESPLANADE
LD723B	PAVING ENLARGEMENT - ESPLANADE
LD724	PAVING ENLARGEMENT - ESPLANADE
LD724B	PAVING ENLARGEMENT - ESPLANADE
LD725	PAVING ENLARGEMENT - ESPLANADE
LD725B	PAVING ENLARGEMENT - ESPLANADE
LD726	PAVING ENLARGEMENT - ESPLANADE

DWG NO.	SHEET TITLE
LD726B	PAVING ENLARGEMENT - ESPLANADE
LD727	PAVING DETAILS
LD728	PAVING DETAILS
LD729	PAVING DETAILS
LD732	PAVING LAYOUT DETAILS
LD733	PAVING LAYOUT DETAILS
LD750	ATHLETIC ENLARGEMENT - DELANCEY BASKETBALL
LD751	ATHLETIC ENLARGEMENT - TENNIS COURTS SOUTH
LD752	ATHLETIC ENLARGEMENT - TENNIS COURTS NORTH
LD753	ATHLETIC ENLARGEMENT - 10TH STREET BASKETBALL
LD754	ATHLETIC ENLARGEMENT - FIELDS 1 AND 2
LD754B	SUBDRAINAGE PLAN - FIELDS 1 AND 2
LD755	ATHLETIC ENLARGEMENT - MULTIUSE AND FIELDS 3 AND 4
LD755B	SUBDRAINAGE PLAN - MULTIUSE AND FIELDS 3 AND 4
LD756	ATHLETIC ENLARGEMENT - FIELDS 5 AND 6
LD756B	SUBDRAINAGE PLAN - FIELDS 5 AND 6
LD757	ATHLETIC ENLARGEMENT - TRACK AND FIELD
LD757B	SUBDRAINAGE PLAN - TRACK AND FIELD
LD758	ATHLETIC ENLARGEMENT - FIELD 7
LD758B	SUBDRAINAGE PLAN - FIELD 7
LD760	UNDERDRAIN DETAILS
LD770	STONE ENLARGEMENT - MONTGOMERY ENTRY AND CORLEARS HOOK BRIDGE
LD771	STONE ENLARGEMENT - DELANCEY ST AND NATURE EXPLORATION
LD772	STONE ENLARGEMENT - WILLIAMSBURG BRIDGE AND HOUSTON ST
LD773	STONE ENLARGEMENT - 10TH ST BRIDGE
LD774	STONE ENLARGEMENT - 10TH ST PLAYGROUND
LD776	STONE - SECTIONS
LD777	STONE - SECTIONS
LD778	STONE - DETAILS
LD779	STONE - DETAILS
LD779A	STONE - SCHEDULE
LD790	BLANK
LD791	BLANK
LD792	BLANK
LD793	BLANK

DWG NO.	SHEET TITLE
LD794	BLANK
LD800	PRECAST - AMPHITHEATER SEATWALLS
LD801	PRECAST - AMPHITHEATER EMBAYMENT
LD802	PRECAST - FIELDS 1 AND 2 STEP DOWN
LD803	PRECAST - TENNIS STEP DOWN
LD804	PRECAST - TENNIS STEP DOWN
LD805	PRECAST - HOUSTON EMBAYMENT
LD806	PRECAST - HOUSTON EMBAYMENT
LD807	PRECAST - TRACK STEP DOWN
LD808	PRECAST - TRACK STEP DOWN
LD809	PRECAST MODULE DETAILS
LD810	PRECAST MODULE DETAILS
LD811	PRECAST MODULE DETAILS
LD820	WALL AND FENCE ELEVATIONS - BASEBALL
LD821	WALL AND FENCE ELEVATIONS - BASEBALL
LD822	WALL AND FENCE ELEVATIONS - MAINTENANCE
LD823	WALL AND FENCE ELEVATIONS - TENNIS
LD824	WALL AND FENCE ELEVATIONS - TENNIS
LD825	WALL AND FENCE ELEVATIONS - PLAYGROUND
LD825A	WALL AND FENCE ELEVATIONS - PLAYGROUND
LD825B	WALL AND FENCE ELEVATIONS - PLAYGROUND AND BASKETBALL
LD826	CURB AND WALL DETAILS
LD827	CURB AND WALL DETAILS
LD828	CAST-IN-PLACE CONCRETE WALLS - AMPHITHEATER AND FIRE BOAT HOUSE
LD829	CAST-IN-PLACE CONCRETE WALLS - FIRE BOAT HOUSE
LD830	FENCE DETAILS
LD830A	FENCE DETAILS
LD835	STAIRS - AMPHITHEATER
LD836	STAIRS - FIRE BOAT HOUSE
LD837	STAIRS - 6TH ST AND 10TH ST PLAYGROUND
LD838	STAIRS AND RAILINGS DETAILS
LD839	SEA RAIL DETAILS
LD839A	SEA RAIL DETAILS
LD839B	SEA RAIL DETAILS
LD839C	SEA RAIL DETAILS

DWG NO.	SHEET TITLE
LD840	FURNISHINGS AND AMENITIES - PICNIC TABLES
LD841	FURNISHINGS AND AMENITIES - BLEACHERS AND BBQ GRILLS
LD842	FURNISHINGS AND AMENITIES - TABLES AND CHAIRS TYPE 1
LD843	FURNISHINGS AND AMENITIES - TABLES AND CHAIRS TYPE 2
LD844	FURNISHINGS AND AMENITIES - UMBRELLAS
LD845	FURNISHINGS AND AMENITIES - SEATING
LD846	FURNISHINGS AND AMENITIES - BAR TOP TABLES
LD847	FURNISHINGS AND AMENITIES - STEEL PICNIC TABLES
LD848	FURNISHINGS AND AMENITIES - RECEPTACLES
LD848A	FURNISHINGS AND AMENITIES
LD850	PLAYGROUND ENLARGEMENT - 10TH ST
LD851	PLAY EQUIPMENT - 10TH ST
LD852	PLAY EQUIPMENT - 10TH ST
LD853	PLAY EQUIPMENT - 10TH ST
LD853A	PLAY EQUIPMENT - 10TH ST
LD853B	PLAY EQUIPMENT - 10TH ST
LD860	FITNESS ENLARGEMENT - ADULT AND SENIOR
LD861	FITNESS EQUIPMENT - ADULT AND SENIOR
LD862	FITNESS ENLARGEMENT - CHALLENGE COURSE
LD863	FITNESS EQUIPMENT - CHALLENGE COURSE
LD870	WATER PLAY - DELANCEY ST
LD871	WATER PLAY - HOUSTON ST
LD872	WATER PLAY - 10TH ST
LD873	WATER PLAY DETAILS
LD880	NATURE EXPLORATION DETAILS
LD881	NATURE EXPLORATION DETAILS
LD890	PARKS SECURITY DETAILS
LD891	PARKS SECURITY DETAILS
LD892	BLANK
LD893	BLANK
LD894	BLANK
LD900	GENERAL NOTES
LD900A	RETAINING WALLS LOCATION PLAN
LD901	RETAINING WALL FOUNDATION PLAN AT REACH C - FDR EDGE
LD902	RETAINING WALL FOUNDATION PLAN AT REACH I/J - FDR EDGE
LD903	RETAINING WALL FOUNDATION PLAN AT REACH J/K - FDR EDGE

DWG NO.	SHEET TITLE
LD904	RETAINING WALL FOUNDATION ELEVATIONS AT REACH C & J/K - FDR EDGE
LD905	RETAINING WALL FOUNDATION ELEVATIONS AT REACH I/J - FDR EDGE
LD906	RETAINING WALL FOUNDATION ELEVATIONS AT REACH D - MAINTENANCE YARD 2
LD907	RETAINING WALL FOUNDATION ELEVATIONS AT REACH H/I - MAINTENANCE YARD 3 EAST
LD908	RETAINING WALL FOUNDATION ELEVATIONS AT REACH H/I - MAINTENANCE YARD 3 WEST
LD909	RETAINING WALLS FOUNDATION ELEVATIONS AT REACH J - PLAYGROUND AND BASKETBALL
LD910	RETAINING WALL TYPICAL SECTIONS 1 OF 3
LD911	RETAINING WALL TYPICAL SECTIONS 2 OF 3
LD911A	RETAINING WALL TYPICAL SECTIONS 3 OF 3
LD911B	RETAINING WALL AT BASKETBALL B WITH CON-ED SECTION 1 OF 2
LD911C	RETAINING WALL AT BASKETBALL B WITH CON-ED SECTION 2 OF 2
LD912	RETAINING WALL AT FDR REACH C & I/J WITH SEWER SECTIONS
LD913	BACKSTOPS FOUNDATION ELEVATION AT REACH F & G - BASEBALL
LD914	BACKSTOPS FOUNDATION ELEVATION AT REACH G & I - BASEBALL
LD915	PRECAST - AMPHITHEATER SEATWALLS
LD916	PRECAST - AMPHITHEATER EMBAYMENT STEPDOWN
LD917	MODULES DETAILS
LD918	PRECAST - FIELDS 1 AND 2 STEPDOWN
LD919	PRECAST - TENNIS STEP DOWN 1 OF 4
LD920	PRECAST - TENNIS STEP DOWN 2 OF 4
LD921	PRECAST - HOUSTON EMBAYMENT 1 OF 3
LD922	PRECAST - HOUSTON EMBAYMENT 2 OF 3
LD923	PRECAST - HOUSTON EMBAYMENT 3 OF 3
LD924	PRECAST - TRACK STEP DOWN 1 OF 3
LD925	PRECAST - TRACK STEP DOWN 2 OF 3
LD926	PRECAST - TRACK STEP DOWN 3 OF 3
LD927	LIGHT TOWER FOUNDATION AT FIELDS 1, 2, 5 & 6
LD928	MISCELLANEOUS PARK FOUNDATION DETAILS 1 OF 3
LD929	MISCELLANEOUS PARK FOUNDATION DETAILS 2 OF 3
LD929A	MISCELLANEOUS PARK FOUNDATION DETAILS 3 OF 3
LD930	FENCE FOUNDATION DETAILS
LD931	CIP CONCRETE STAIRS - AMPHITHEATER

DWG NO.	SHEET TITLE
LD932	CIP CONCRETE STAIRS - FIRE BOAT HOUSE
LD933	CIP CONCRETE STAIRS - 6TH STREET & 10TH STREET PLAYGROUND
LD934	CIP CONCRETE STAIRS - CORLEARS HOOK PARK
LD935	STONES FOUNDATION 1 OF 3
LD936	STONES FOUNDATION 2 OF 3
LD937	STONES FOUNDATION 1 OF 3
LD938	FOUNDATION DETAILS 1 OF 2
LD939	FOUNDATION DETAILS 2 OF 2
PUE001	SITE ELECTRICAL GENERAL NOTES, LEGEND AND ABBREVIATIONS
PUE002	EAST RIVER PARK PROPOSED SITE ELECTRICAL SERVICE PLAN
PUE300	PARK UTILITIES - ELECTRICAL PLAN SEGMENT 1 - REACH A STA. 9+07 - 16+91
PUE301	PARK UTILITIES - ELECTRICAL PLAN SEGMENT 1 - REACH B STA. 16+91 - 23+82
PUE302	PARK UTILITIES - ELECTRICAL PLAN SEGMENT 1 - REACH C STA. 23+82 - 30+44
PUE303	PARK UTILITIES - ELECTRICAL PLAN SEGMENT 1 - REACH D STA. 30+44 - 39+96
PUE304	PARK UTILITIES - ELECTRICAL PLAN SEGMENT 1 - REACH E STA. 39+96 - 49+91
PUE305	PARK UTILITIES - ELECTRICAL PLAN SEGMENT 2 - REACH F STA. 49+91 - 58+94
PUE306	PARK UTILITIES - ELECTRICAL PLAN SEGMENT 2 - REACH G STA. 58+94 - 69+33
PUE307	PARK UTILITIES - ELECTRICAL PLAN SEGMENT 2 - REACH H STA. 69+33 - 77+86
PUE308	PARK UTILITIES - ELECTRICAL PLAN SEGMENT 3 - REACH I STA. 77+86 - 86+97
PUE309	PARK UTILITIES - ELECTRICAL PLAN SEGMENT 3 - REACH J STA. 86+97 - 91+88
PUE330	TEMPORARY DOT ITS FOC PLAN FOR OSS NO. 1
PUE331	PROPOSED DOT ITS FOC PLAN FOR OSS NO. 1
PUE332	PROPOSED OSS NO. 1/DMS NO. 1 AT JACKSON STREET PLAN
PUE333	PROPOSED OSS NO. 1/DMS NO. 1 AT JACKSON STREET ELEVATION
PUE334	OSS NO. 1/DMS NO. 1 DOT ITS RISER DIAGRAM
PUE335	OSS NO. 1/DMS NO. 1 DOT ITS CABINET DETAILS
PUE340	PROPOSED DOT ITS FOC PLAN FOR OSS NO. 82/DMS NO. 2
PUE341	PROPOSED OSS 8S/DMS NO. 2 PLAN

DWG NO.	SHEET TITLE
PUE342	PROPOSED OSS 8S/DMS NO. 2 ELEVATION
PUE343	OSS 8S/DMS NO. 2 DOT ITS RISER DIAGRAM
PUE344	OSS 8S/DMS NO. 2 DOT ITS CABINET DETAILS
PUE410	M&O AREA 1 ELECTRICAL SITE PLAN SEGMENT 1 - REACH B
PUE411	M&O AREA 1 CANOPY LIGHTING PLAN
PUE412	M&O AREA 1 CANOPY PV PANEL ROOF LAYOUT PLAN & DETAIL
PUE413	M&O AREA 1 CANOPY PV PANEL GROUNDING PLAN
PUE414	M&O AREA 1 CANOPY PV WIRING DIAGRAM AND PANEL SCHEDULE
PUE415	M&O CANOPY TYPICAL ELECTRICAL DETAILS
PUE420	M&O AREA 2 ELECTRICAL SITE PLAN SEGMENT 1 - REACH D
PUE421	M&O AREA 2 CANOPY LIGHTING PLAN
PUE422	M&O AREA 2 CANOPY PV PANEL ROOF LAYOUT PLAN & DETAIL
PUE423	M&O AREA 2 CANOPY PV PANEL ROOF GROUNDING PLAN
PUE424	M&O AREA 2 CANOPY PV WIRING DIAGRAM AND PANEL SCHEDULE
PUE425	M&O AREA 2 ELECTRICAL DETAILS
PUE430	M&O AREA 3 ELECTRICAL SITE PLAN
PUE431	M&O AREA 3 ELECTRICAL DETAILS
PUEW300	PARK UTILITIES - WALKWAY LIGHTING PLAN SEGMENT 1 - REACH A STA. 9+07 - 16+91
PUEW301	PARK UTILITIES - WALKWAY LIGHTING PLAN SEGMENT 1 - REACH B STA. 16+91 - 23+82
PUEW302	PARK UTILITIES - WALKWAY LIGHTING PLAN SEGMENT 1 - REACH C STA. 23+82 - 30+44
PUEW303	PARK UTILITIES - WALKWAY LIGHTING PLAN SEGMENT 1 - REACH D STA. 30+44 - 39+96
PUEW304	PARK UTILITIES - WALKWAY LIGHTING PLAN SEGMENT 1 - REACH E STA. 39+96 - 49+91
PUEW305	PARK UTILITIES - WALKWAY LIGHTING PLAN SEGMENT 2 - REACH F STA. 49+91 - 58+94
PUEW306	PARK UTILITIES - WALKWAY LIGHTING PLAN SEGMENT 2 - REACH G STA. 58+94 - 69+33
PUEW307	PARK UTILITIES - WALKWAY LIGHTING PLAN SEGMENT 2 - REACH H STA. 69+33 - 77+86
PUEW308	PARK UTILITIES - WALKWAY LIGHTING PLAN SEGMENT 3 - REACH I STA. 77+86 - 86+97
PUEW309	PARK UTILITIES - WALKWAY LIGHTING PLAN SEGMENT 3 - REACH J STA. 86+97 - 91+88

DWG NO.	SHEET TITLE
PUE701	EXISTING LIGHTING SYSTEM ONE-LINE DIAGRAM & ELECTRICAL CABINET SYSTEM
PUE702	GRAND STREET FERRY SERVICE ONE-LINE DIAGRAM
PUE703	AMPHITHEATER ONE-LINE DIAGRAM & ELECTRICAL CABINET DETAIL
PUE704	EVENT POWER CABINET DETAILS AT AMPHITHEATER
PUE705	M&O AREAS 2 & 3 ELECTRICAL ONE-LINE DIAGRAMS
PUE706	EAST 10TH STREET NYC DOT ITS FIBER ROUTING PLAN
PUE707	LEFT BLANK
PUE708	LEFT BLANK
PUE709	LEFT BLANK
PUE710	LEFT BLANK
PUE711	LEFT BLANK
PUE720	SPORTS FIELD 1 & 2 FLOODLIGHT POLE DETAILS AND SCHEDULES
PUE721	SPORTS FIELD 6 FLOODLIGHT POLE DETAILS AND SCHEDULES
PUE722	FLOODLIGHT AND POLE CROSSARM DETAILS
PUE723	POLE CROSSARM DETAILS
PUE724	WALKWAY LIGHTPOLE DETAILS
PUE725	SOLAR PV LIGHTING DETAILS
PUE726	CORLEARS HOOK BRIDGE LIGHTPOLE DETAILS
PUE727	ROADWALL PULLBOX DETAILS
PUE728	ELECTRICAL DETAILS NO. 1
PUE729	CABLE SEAL DETAILS
PUE730	DMS NO. 1 DETAILS
PUE731	DMS NO. 2 DETAILS
SL300	STREET LIGHTING PLAN SEGMENT 1 - REACH A STA. 9+07 - 16+91
SL301	STREET LIGHTING PLAN SEGMENT 1 - REACH B STA. 16+91 - 23+82
SL302	STREET LIGHTING PLAN SEGMENT 1 - REACH C STA. 23+82 - 30+44
SL303	STREET LIGHTING PLAN SEGMENT 1 - REACH D STA. 30+44 - 39+99
SL304	STREET LIGHTING PLAN SEGMENT 1 - REACH E STA. 39+99 - 49+94
SL305	STREET LIGHTING PLAN SEGMENT 2 - REACH F STA. 49+94 - 58+67
SL306	STREET LIGHTING PLAN SEGMENT 2 - REACH G STA. 58+67 - 69+33
SL307	STREET LIGHTING PLAN SEGMENT 2 - REACH H STA. 69+33 - 77+58
SL308	STREET LIGHTING PLAN SEGMENT 3 - REACH I STA. 77+58 - 86+64
SL309	STREET LIGHTING PLAN SEGMENT 3 - REACH J STA. 86+64 - 96+28
SL310	STREET LIGHTING PLAN SEGMENT 4 - REACH K STA. 96+28 - 102+34
SL700	STREET LIGHTING PLAN DETAILS

DWG NO.	SHEET TITLE
SL701	STREET LIGHTING PLAN DETAILS
SL702	STREET LIGHTING PLAN DETAILS
TS300	TRAFFIC SIGNAL PLAN MONTGOMERY STREET & SOUTH STREET
TS700	TRAFFIC SIGNAL PLAN DETAIL
TS701	TRAFFIC SIGNAL PLAN DETAIL
TS702	TRAFFIC SIGNAL PLAN DETAIL
PUP001	PLUMBING GENERAL NOTES, LEGEND AND ABBREVIATIONS
PUP002	EAST RIVER PARK PROPOSED SITE GAS SERVICE PLAN
PUP003	EAST RIVER PARK PROPOSED SITE WATER SERVICE PLAN
PUP004	EAST RIVER PARK WATER SUPPLY SERVICE MAIN DIAGRAMS
PUP300	PARK UTILITIES - PLUMBING PLAN SEGMENT 1 - REACH A STA. 9+07 - 16+91
PUP301	PARK UTILITIES - PLUMBING PLAN SEGMENT 1 - REACH B STA. 16+91 - 23+82
PUP302	PARK UTILITIES - PLUMBING PLAN SEGMENT 1 - REACH C STA. 23+82 - 30+44
PUP303	PARK UTILITIES - PLUMBING PLAN SEGMENT 1 - REACH D STA. 30+44 - 39+96
PUP304	PARK UTILITIES - PLUMBING PLAN SEGMENT 1 - REACH E STA. 39+96 - 49+91
PUP305	PARK UTILITIES - PLUMBING PLAN SEGMENT 2 - REACH F STA. 49+91 - 58+94
PUP306	PARK UTILITIES - PLUMBING PLAN SEGMENT 2 - REACH G STA. 58+94 - 69+33
PUP307	PARK UTILITIES - PLUMBING PLAN SEGMENT 2 - REACH H STA. 69+33 - 77+86
PUP308	PARK UTILITIES - PLUMBING PLAN SEGMENT 3 - REACH I STA. 77+86 - 86+97
PUP309	PARK UTILITIES - PLUMBING PLAN SEGMENT 3 - REACH J STA. 86+97 - 91+88
PUP320	DELANCEY STREET WATER PLAY FEATURES
PUP321	HOUSTON STREET WATER PLAY FEATURES
PUP322	EAST 10TH STREET WATER PLAY FEATURES
PUP700	8" RPZ AND 8" WATER METER DETAIL NO. 1 AND SECTION
PUP701	8" RPZ AND 8" WATER METER PLA AND SECTION
PUP702	PLUMBING DETAILS NO. 1
PUP703	PLUMBING DETAILS NO. 2
PUP704	RPZ DETAILS NO. 1

DWG NO.	SHEET TITLE
PUP705	RPZ DETAILS NO. 2
PUP706	DELANCEY STREET WATER PLAY MANIFOLD EQUIPMENT CABINET
PUPI300	PARK UTILITIES - SITE IRRIGATION PLAN SEGMENT 1 - REACH A STA. 9+07 - 16+91
PUPI301	PARK UTILITIES - SITE IRRIGATION PLAN SEGMENT 1 - REACH B STA. 16+91 - 23+82
PUPI302	PARK UTILITIES - SITE IRRIGATION PLAN SEGMENT 1 - REACH C STA. 23+82 - 30+44
PUPI303	PARK UTILITIES - SITE IRRIGATION PLAN SEGMENT 1 - REACH D STA. 30+44 - 39+99
PUPI304	PARK UTILITIES - SITE IRRIGATION PLAN SEGMENT 1 - REACH E STA. 39+99 - 49+94
PUPI305	PARK UTILITIES - SITE IRRIGATION PLAN SEGMENT 2 - REACH F STA. 49+94 - 58+64
PUPI306	PARK UTILITIES - SITE IRRIGATION PLAN SEGMENT 2 - REACH G STA. 58+64 - 69+33
PUPI307	PARK UTILITIES - SITE IRRIGATION PLAN SEGMENT 2 - REACH H STA. 69+33 - 77+58
PUPI308	PARK UTILITIES - SITE IRRIGATION PLAN SEGMENT 3 - REACH I STA. 77+58 - 86+64
PUPI309	PARK UTILITIES - SITE IRRIGATION PLAN SEGMENT 3 - REACH J STA. 86+64 - 96+28
LLP500	PAVEMENT MARKING PLAN SEGMENT 1 - REACH A STA. 9+07 - 16+91
LLP501	PAVEMENT MARKING PLAN SEGMENT 1 - REACH B STA. 16+91 - 23+82
LLP502	PAVEMENT MARKING PLAN SEGMENT 1 - REACH C STA. 23+82 - 30+44
LLP503	PAVEMENT MARKING PLAN SEGMENT 1 - REACH D STA. 30+44 - 39+99
LLP504	PAVEMENT MARKING PLAN SEGMENT 1 - REACH E STA. 39+99 - 49+94
LLP505	PAVEMENT MARKING PLAN SEGMENT 2 - REACH F STA. 49+94 - 58+67
LLP506	PAVEMENT MARKING PLAN SEGMENT 2 - REACH G STA. 58+67 - 69+33
LLP507	PAVEMENT MARKING PLAN SEGMENT 2 - REACH H STA. 69+33 - 77+58
LLP508	PAVEMENT MARKING PLAN SEGMENT 3 - REACH I STA. 77+58 - 86+64
LLP509	PAVEMENT MARKING PLAN SEGMENT 3 - REACH J STA. 86+64 - 96+28
PUPI502	PARK UTILITIES - TREE IRRIGATION PLAN SEGMENT 1 - REACH C STA. 23+82 - 30+44
PUPI503	PARK UTILITIES - TREE IRRIGATION PLAN SEGMENT 1 - REACH D STA. 30+44 - 39+99
PUPI504	PARK UTILITIES - TREE IRRIGATION PLAN SEGMENT 1 - REACH E STA. 39+99 - 49+94

DWG NO.	SHEET TITLE
PUPI505	PARK UTILITIES - TREE IRRIGATION PLAN SEGMENT 2 - REACH F STA. 49+94 - 58+64
PUPI506	PARK UTILITIES - TREE IRRIGATION PLAN SEGMENT 2 - REACH G STA. 58+64 - 69+33
PUPI507	PARK UTILITIES - TREE IRRIGATION PLAN SEGMENT 2 - REACH H STA. 69+33 - 77+58
PUPI508	PARK UTILITIES - TREE IRRIGATION PLAN SEGMENT 3 - REACH I STA. 77+58 - 86+64
PUPI509	PARK UTILITIES - TREE IRRIGATION PLAN SEGMENT 3 - REACH J STA. 86+64 - 96+28
PUPI701	IRRIGATION DETAILS NO. 1
PUPI702	IRRIGATION DETAILS NO. 2
SB100	WILLIAMSBURG BRIDGE SECURITY BOLLARDS - DEMOLITION PLAN
SB101	WILLIAMSBURG BRIDGE SECURITY BOLLARDS - DEMOLITION DETAILS
SB300	WILLIAMSBURG BRIDGE SECURITY BOLLARDS - GENERAL PLAN
SB301	WILLIAMSBURG BRIDGE SECURITY BOLLARDS - FOUNDATION PLAN
SB302	WILLIAMSBURG BRIDGE SECURITY BOLLARDS - FOUNDATION PART PLAN AND SCHEDULES
SB303	WILLIAMSBURG BRIDGE SECURITY BOLLARDS - WALL AND BOLLARD PLAN
SB304	WILLIAMSBURG BRIDGE SECURITY BOLLARDS - PART PLAN AND BOLLARD SCHEDULE
SB700	WILLIAMSBURG BRIDGE SECURITY BOLLARDS - DETAILS SHEET 1 OF 2
SB700A	WILLIAMSBURG BRIDGE SECURITY BOLLARDS - DETAILS SHEET 1A OF 2
SB701	WILLIAMSBURG BRIDGE SECURITY BOLLARDS - DETAILS SHEET 2 OF 2
T-100.00	COVER SHEET M&O AREA 1
G-100.00	M&O AREA 1 GENERAL NOTES
G-101.00	M&O AREA 1 SYMBOLS, ABBREVIATIONS
G-102.00	M&O AREA 1 MATERIAL INDEX & ASSEMBLY SCHEDULE
G-103.00	M&O AREA 1 ACCESSIBILITY DIAGRAMS AND TYPICAL MOUNTING HEIGHTS
G-104.00	M&O AREA 1 SITE KEY PLAN
A-100.00	M&O AREA 1 CANOPY SITE PLAN
A-101.00	M&O AREA 1 CANOPY SITE PLAN - FENCE
A-110.00	M&O AREA 1 CANOPY CANOPY PLANS

DWG NO.	SHEET TITLE
A-120.00	M&O AREA 1 CANOPY EXTERIOR ELEVATIONS
A-130.00	M&O AREA 1 CANOPY SECTIONS
A-150.00	M&O AREA 1 CANOPY DETAILS
A-151.00	M&O AREA 1 CANOPY DETAILS
A-152.00	M&O AREA 1 CANOPY FENCE DETAILS
A-153.00	M&O AREA 1 CANOPY FENCE DETAILS
A-154.00	M&O AREA 1 CANOPY FENCE DETAILS
A-170.00	M&O AREA 1 CANOPY CLADDING SCHEDULE
E-100.00	M&O AREA 1 ELECTRICAL SITE PLAN SEGMENT 1 - REACH B
E-101.00	M&O AREA 1 CANOPY LIGHTING PLAN
E-102.00	M&O AREA 1 CANOPY PV PANEL ROOF LAYOUT PLAN & DETAIL
E-103.00	M&O AREA 1 CANOPY PV PANEL GROUNDING PLAN
E-104.00	M&O AREA 1 CANOPY PV WIRING DIAGRAM AND PANEL SCHEDULE
E-105.00	M&O CANOPY TYPICAL ELECTRICAL DETAILS
S-100.00	M&O AREA 1 STRUCTURAL FACILITIES GENERAL NOTES, LEGENDS & ABBREVIATIONS 1 OF 2
S-101.00	M&O AREA 1 STRUCTURAL FACILITIES GENERAL NOTES, LEGENDS & ABBREVIATIONS 2 OF 2
S-102.00	M&O AREA 1 CANOPY SITE PLAN AND LAYOUT
S-103.00	M&O AREA 1 CANOPY FRAMING PLAN, ELEVATION AND DETAILS 1 OF 3
S-104.00	M&O AREA 1 CANOPY FRAMING PLAN, ELEVATION AND DETAILS 2 OF 3
S-105.00	M&O AREA 1 CANOPY FRAMING PLAN, ELEVATION AND DETAILS 3 OF 3
S-105A.00	M&O AREA 1 CANOPY STEEL FRAMING AND SECTION DETAILS
S-106.00	M&O AREA 1 CANOPY FOUNDATION AND PEDESTAL DETAILS
S-107.00	M&O AREA 1 EV CHARGE STATION FOUNDATION DETAILS
S-108.00	RECORD OF BORINGS SHEET 1 OF 2
S-109.00	RECORD OF BORINGS SHEET 2 OF 2
T-200.00	COVER SHEET M&O AREA 2 CANOPY
G-200.00	M&O AREA 2 GENERAL NOTES
G-201.00	M&O AREA 2 SYMBOLS, ABBREVIATIONS
G-202.00	M&O AREA 2 MATERIAL INDEX & ASSEMBLY SCHEDULE
G-203.00	M&O AREA 2 ACCESSIBILITY DIAGRAMS AND TYPICAL MOUNTING HEIGHTS
G-204.00	M&O AREA 2 SITE KEY PLAN

DWG NO.	SHEET TITLE
A-200.00	M&O AREA 2 CANOPY SITE PLAN
A-201.00	M&O AREA 2 CANOPY SITE PLAN - FENCE
A-210.00	M&O AREA 2 CANOPY CANOPY PLAN AND STRUCTURAL FRAMING PLAN
A-211.00	M&O AREA 2 CANOPY CANOPY ROOF PLAN AND RCP
A-220.00	M&O AREA 2 CANOPY EXTERIOR ELEVATIONS
A-230.00	M&O AREA 2 CANOPY SECTIONS
A-250.00	M&O AREA 2 CANOPY DETAILS
A-251.00	M&O AREA 2 CANOPY DETAILS
A-252.00	M&O AREA 2 CANOPY FENCE DETAILS
A-253.00	M&O AREA 2 CANOPY FENCE DETAILS
A-254.00	M&O AREA 2 CANOPY FENCE DETAILS
A-270.00	M&O AREA 2 CANOPY CLADDING SCHEDULE
E-200.00	M&O AREA 2 ELECTRICAL SITE PLAN SEGMENT 1 - REACH D
E-201.00	M&O AREA 2 CANOPY LIGHTING PLAN
E-202.00	M&O AREA 2 CANOPY PV PANEL ROOF LAYOUT PLAN & DETAIL
E-203.00	M&O AREA 2 CANOPY PV PANEL ROOF GROUNDING PLAN
E-204.00	M&O AREA 2 CANOPY PV WIRING DIAGRAM AND PANEL SCHEDULE
E-205.00	M&O AREA 2 ELECTRICAL DETAILS
S-200.00	M&O AREA 2 FACILITIES STRUCTURAL GENERAL NOTES, LEGENDS & ABBREVIATIONS 1 OF 2
S-201.00	M&O AREA 2 FACILITIES STRUCTURAL GENERAL NOTES, LEGENDS & ABBREVIATIONS 2 OF 2
S-202.00	M&O AREA 2 CANOPY SITE PLAN AND LAYOUT
S-203.00	M&O AREA 2 CANOPY FRAMING PLAN, ELEVATION AND DETAILS 1 OF 3
S-204.00	M&O AREA 2 CANOPY FRAMING PLAN, ELEVATION AND DETAILS 2 OF 3
S-205.00	M&O AREA 2 CANOPY FRAMING PLAN, ELEVATION AND DETAILS 3 OF 3
S-205A.00	M&O AREA 2 CANOPY STEEL FRAMING AND SECTION DETAILS
S-206.00	M&O AREA 2 CANOPY PILE CAP AND PEDESTAL DETAILS
S-207.00	M&O AREA 2 EV CHARGE STATION FOUNDATION DETAILS
S-208.00	RECORD OF BORINGS SHEET 1 OF 2
S-209.00	RECORD OF BORINGS SHEET 2 OF 2
T-300.00	COVER SHEET M&O AREA 2
G-300.00	M&O AREA 2 GENERAL NOTES

DWG NO.	SHEET TITLE
G-301.00	M&O AREA 2 SYMBOLS, ABBREVIATIONS
G-302.00	M&O AREA 2 MATERIAL INDEX & ASSEMBLY SCHEDULE
G-303.00	M&O AREA 2 ACCESSIBILITY DIAGRAMS AND TYPICAL MOUNTING HEIGHTS
G-304.00	M&O AREA 2 SITE KEY PLAN
A-300.00	M&O AREA 2 BUILDING SITE PLAN
A-301.00	M&O AREA 2 BUILDING PLAN, RCP AND ROOF PLAN
A-320.00	M&O AREA 2 BUILDING EXTERIOR ELEVATIONS
A-330.00	M&O AREA 2 BUILDING BUILDING SECTIONS
A-340.00	M&O AREA 2 BUILDING WALL PRECAST PATTERN
A-341.00	M&O AREA 2 BUILDING WALL PRECAST PATTERN
A-342.00	M&O AREA 2 BUILDING WALL PRECAST PATTERN
A-343.00	M&O AREA 2 BUILDING ROOF PRECAST PATTERN
A-344.00	M&O AREA 2 BUILDING ROOF PRECAST PATTERN
A-350.00	M&O AREA 2 BUILDING WALL SECTIONS
A-351.00	M&O AREA 2 BUILDING EXTERIOR DETAILS
A-352.00	M&O AREA 2 BUILDING EXTERIOR DETAILS
A-353.00	M&O AREA 2 BUILDING EXTERIOR DETAILS
A-354.00	M&O AREA 2 BUILDING EXTERIOR DETAILS
A-355.00	M&O AREA 2 BUILDING EXTERIOR DETAILS
A-370.00	M&O AREA 2 BUILDING DOOR SCHEDULE
E-300.00	M&O AREA 2 BUILDING ELECTRICAL GENERAL NOTES, LEGEND AND ABBREVIATIONS
E-301.00	M&O AREA 2 BUILDING ELECTRICAL POWER PLAN
E-302.00	M&O AREA 2 BUILDING ELECTRICAL LIGHTING PLAN
EN-304.00	M&O AREA 2 NYCECC COMPLIANCE LIGHTING AND MECHANICAL
S-300.00	M&O AREA 2 PREFABRICATED BUILDING STRUCTURAL GENERAL NOTES, LEGENDS & ABBREVIATIONS 1 OF 2
S-301.00	M&O AREA 2 PREFABRICATED BUILDING STRUCTURAL GENERAL NOTES, LEGENDS & ABBREVIATIONS 2 OF 2
S-302.00	M&O AREA 2 PREFABRICATED BUILDING SITE PLAN AND LAYOUT
S-303.00	M&O AREA 2 PREFABRICATED BUILDING FOUNDATION PLAN
S-304.00	M&O AREA 2 PREFABRICATED BUILDING SECTIONS
S-305.00	M&O AREA 2 PREFABRICATED ATTACHMENT DETAILS
S-305A.00	M&O AREA 2 PREFABRICATED BUILDING SECTION DETAILS
S-306.00	RECORD OF BORINGS SHEET 1 OF 2

DWG NO.	SHEET TITLE
S-307.00	RECORD OF BORINGS SHEET 2 OF 2
P-300.00	M&O AREA 2 BUILDING PLUMBING GENERAL NOTES, LEGEND AND ABBREVIATIONS
P-301.00	M&O AREA 2 BUILDING WATER PIPING PLAN
P-302.00	M&O AREA 2 BUILDING DRAINAGE PLAN
P-303.00	M&O AREA 2 BUILDING PLUMBING RISER
P-304.00	M&O AREA 2 BUILDING PLUMBING DETAILS NO. 1
P-305.00	M&O AREA 2 BUILDING PLUMBING DETAILS NO. 2
P-306.00	M&O AREA 2 BUILDING PLUMBING FIXTURE SCHEDULE
M-300.00	M&O AREA 2 BUILDING MECHANICAL GENERAL NOTES, LEGEND AND ABBREVIATIONS
M-301.00	M&O AREA 2 BUILDING MECHANICAL PLAN
T-400.00	COVER SHEET M&O AREA 3
G-400.00	M&O AREA 3 BUILDING GENERAL NOTES
G-401.00	M&O AREA 3 BUILDING SYMBOLS, ABBREVIATIONS
G-402.00	M&O AREA 3 BUILDING MATERIAL INDEX & ASSEMBLY SCHEDULE
G-403.00	M&O AREA 3 BUILDING ACCESSIBILITY DIAGRAMS AND TYPICAL MOUNTING HEIGHTS
G-404.00	M&O AREA 3 BUILDING SITE KEY PLAN
A-400.00	M&O AREA 3 BUILDING SITE PLAN
A-401.00	M&O AREA 3 BUILDING SITE PLAN - FENCE
A-410.00	M&O AREA 3 BUILDING PLAN, RCP AND ROOF PLAN
A-420.00	M&O AREA 3 BUILDING EXTERIOR ELEVATIONS
A-430.00	M&O AREA 3 BUILDING BUILDING SECTIONS
A-440.00	M&O AREA 3 BUILDING WALL PRECAST PATTERN
A-441.00	M&O AREA 3 BUILDING WALL PRECAST PATTERN
A-442.00	M&O AREA 3 BUILDING WALL PRECAST PATTERN
A-443.00	M&O AREA 3 BUILDING ROOF PRECAST PATTERN
A-444.00	M&O AREA 3 BUILDING ROOF PRECAST PATTERN
A-450.00	M&O AREA 3 BUILDING WALL SECTIONS
A-451.00	M&O AREA 3 BUILDING EXTERIOR DETAILS
A-452.00	M&O AREA 3 BUILDING EXTERIOR DETAILS
A-453.00	M&O AREA 3 BUILDING EXTERIOR DETAILS
A-454.00	M&O AREA 3 BUILDING EXTERIOR DETAILS
A-455.00	M&O AREA 3 BUILDING EXTERIOR DETAILS
A-456.00	M&O AREA 3 BUILDING FENCE DETAILS

DWG NO.	SHEET TITLE
A-457.00	M&O AREA 3 BUILDING FENCE DETAILS
A-458.00	M&O AREA 3 BUILDING FENCE DETAILS
A-470.00	M&O AREA 3 BUILDING DOOR SCHEDULE
E-400.00	M&O AREA 3 BUILDING BUILDING ELECTRICAL GENERAL NOTES, LEGEND AND ABBREVIATIONS
E-401.00	M&O AREA 3 BUILDING BUILDING ELECTRICAL POWER PLAN
E-402.00	M&O AREA 3 BUILDING BUILDING ELECTRICAL LIGHTING PLAN
EN-404.00	M&O AREA 3 BUILDING NYCECC COMPLIANCE LIGHTING AND MECHANICAL
S-400.00	M&O AREA 3 PREFABRICATED BUILDING STRUCTURAL GENERAL NOTES, LEGENDS & ABBREVIATIONS 1 OF 2
S-401.00	M&O AREA 3 PREFABRICATED BUILDING STRUCTURAL GENERAL NOTES, LEGENDS & ABBREVIATIONS 2 OF 2
S-402.00	M&O AREA 3 PREFABRICATED BUILDING SITE PLAN AND LAYOUT
S-403.00	M&O AREA 3 PREFABRICATED BUILDING FOUNDATION PLAN
S-404.00	M&O AREA 3 PREFABRICATED BUILDING SECTIONS
S-405.00	M&O AREA 3 PREFABRICATED ATTACHMENT DETAILS
S-406.00	M&O AREA 3 PREFABRICATED BUILDING SECTION DETAILS
S-407.00	RECORD OF BORINGS SHEET 1 OF 2
S-408.00	RECORD OF BORINGS SHEET 2 OF 2
P-400.00	M&O AREA 3 BUILDING PLUMBING GENERAL NOTES, LEGEND AND ABBREVIATIONS
P-401.00	M&O AREA 3 BUILDING PLUMBING PLAN
P-402.00	M&O AREA 3 BUILDING PLUMBING RISER NO. 1
P-403.00	M&O AREA 3 BUILDING PLUMBING DETAILS NO. 1
P-404.00	M&O AREA 3 BUILDING PLUMBING FIXED SCHEDULE
M-400.00	M&O AREA 3 BUILDING MECHANICAL GENERAL NOTES, LEGEND AND ABBREVIATIONS
M-401.00	M&O AREA 3 BUILDING MECHANICAL PLAN
T-500.00	COVER SHEET TRACK AND FIELD BUILDING
G-500.00	TRACK AND FIELD BUILDING GENERAL NOTES
G-501.00	TRACK AND FIELD BUILDING SYMBOLS, ABBREVIATIONS
G-502.00	TRACK AND FIELD BUILDING MATERIAL INDEX & ASSEMBLY SCHEDULE
G-503.00	TRACK AND FIELD BUILDING ACCESSIBILITY DIAGRAMS AND TYPICAL MOUNTING HEIGHTS
G-504.00	TRACK AND FIELD BUILDING SITE KEY PLAN

DWG NO.	SHEET TITLE
A-500.00	TRACK AND FIELD BUILDING SITE PLAN
A-501.00	TRACK AND FIELD BUILDING FLOOR PLAN
A-502.00	TRACK AND FIELD BUILDING CLERESTORY PLAN
A-503.00	TRACK AND FIELD BUILDING RCP
A-504.00	TRACK AND FIELD BUILDING ROOF PLAN
A-520.00	TRACK AND FIELD BUILDING EXTERIOR ELEVATIONS
A-521.00	TRACK AND FIELD BUILDING EXTERIOR ELEVATIONS
A-522.00	TRACK AND FIELD BUILDING EXTERIOR ELEVATIONS
A-523.00	TRACK AND FIELD BUILDING EXTERIOR ELEVATIONS
A-524.00	TRACK AND FIELD BUILDING EXTERIOR ELEVATIONS
A-525.00	TRACK AND FIELD BUILDING EXTERIOR ELEVATIONS
A-530.00	TRACK AND FIELD BUILDING BUILDING SECTIONS
A-531.00	TRACK AND FIELD BUILDING BUILDING SECTIONS
A-540.00	TRACK AND FIELD BUILDING BRICK COURSING LAYOUT
A-541.00	TRACK AND FIELD BUILDING BRICK WALL PATTERN
A-542.00	TRACK AND FIELD BUILDING BRICK WALL PATTERN
A-543.00	TRACK AND FIELD BUILDING BRICK WALL PATTERN
A-544.00	TRACK AND FIELD BUILDING BRICK WALL PATTERN
A-545.00	TRACK AND FIELD BUILDING BRICK WALL PATTERN
A-546.00	TRACK AND FIELD BUILDING BRICK WALL PATTERN
A-547.00	TRACK AND FIELD BUILDING BRICK WALL PATTERN
A-548.00	TRACK AND FIELD BUILDING BRICK WALL PATTERN
A-549.00	TRACK AND FIELD BUILDING BRICK WALL PATTERN
A-550.00	TRACK AND FIELD BUILDING BRICK WALL PATTERN
A-551.00	TRACK AND FIELD BUILDING BRICK WALL PATTERN
A-560.00	TRACK AND FIELD BUILDING ENLARGED WALL SECTIONS
A-561.00	TRACK AND FIELD BUILDING ENLARGED WALL SECTIONS
A-562.00	TRACK AND FIELD BUILDING EXTERIOR DETAILS
A-563.00	TRACK AND FIELD BUILDING EXTERIOR DETAILS
A-564.00	TRACK AND FIELD BUILDING EXTERIOR DETAILS
A-565.00	TRACK AND FIELD BUILDING EXTERIOR DETAILS
A-566.00	TRACK AND FIELD BUILDING EXTERIOR DETAILS
A-567.00	TRACK AND FIELD BUILDING ENLARGED EXTERIOR DETAILS
A-568.00	TRACK AND FIELD BUILDING ENLARGED EXTERIOR DETAILS
A-569.00	TRACK AND FIELD BUILDING GAS METER DETAILS
A-570.00	TRACK AND FIELD BUILDING INTERIOR ELEVATIONS

DWG NO.	SHEET TITLE
A-571.00	TRACK AND FIELD BUILDING INTERIOR ELEVATIONS
A-572.00	TRACK AND FIELD BUILDING INTERIOR ELEVATIONS
A-573.00	TRACK AND FIELD BUILDING INTERIOR ELEVATIONS
A-574.00	TRACK AND FIELD BUILDING INTERIOR ELEVATIONS
A-575.00	TRACK AND FIELD BUILDING INTERIOR DETAILS
A-576.00	TRACK AND FIELD BUILDING INTERIOR DETAILS
A-577.00	TRACK AND FIELD BUILDING INTERIOR DETAILS
A-578.00	TRACK AND FIELD BUILDING INTERIOR DETAILS
A-580.00	TRACK AND FIELD BUILDING DOOR SCHEDULE
A-581.00	TRACK AND FIELD BUILDING WINDOW SCHEDULE
A-582.00	TRACK AND FIELD BUILDING SCREEN SCHEDULE
A-583.00	TRACK AND FIELD BUILDING PARTITION TYPES
A-584.00	TRACK AND FIELD BUILDING FINISH SCHEDULE
E-500.00	TRACK AND FIELD BUILDING BUILDING ELECTRICAL GENERAL NOTES, LEGEND AND ABBREVIATIONS
E-501.00	TRACK AND FIELD BUILDING ELECTRICAL POWER PLAN
E-502.00	TRACK AND FIELD BUILDING ELECTRICAL LIGHTING PLAN
E-503.00	TRACK AND FIELD BUILDING ELECTRICAL ROOF PLAN
E-504.00	TRACK AND FIELD BUILDING ONE-LINE DIAGRAM AND PANEL SCHEDULES
EN-505.00	TRACK AND FIELD BUILDING NYCECC COMPLIANCE LIGHTING AND MECHANICAL SHEET NO. 1
EN-506.00	TRACK AND FIELD BUILDING NYCECC COMPLIANCE LIGHTING AND MECHANICAL SHEET NO. 2
F-500.00	TRACK AND FIELD BUILDING FIRE SPRINKLER NOTES, LEGEND AND ABBREVIATIONS
F-501.00	TRACK AND FIELD BUILDING FIRE SPRINKLER SYSTEM PLAN
F-502.00	TRACK AND FIELD BUILDING FIRE SPRINKLER SYSTEM RISER DIAGRAM
F-503.00	TRACK AND FIELD BUILDING FIRE SPRINKLER DETAILS
FA-500.00	TRACK AND FIELD BUILDING FIRE ALARM NOTES, LEGEND AND ABBREVIATINOS
FA-501.00	TRACK AND FIELD BUILDING FIRE ALARM PLAN
FA-502.00	TRACK AND FIELD BUILDING FIRE ALARM RISER DIAGRAM
S-500.00	TRACK HOUSE STRUCTURAL GENERAL NOTES, LEGENDS & ABBREVIATIONS 1 OF 2
S-501.00	TRACK HOUSE STRUCTURAL GENERAL NOTES, LEGENDS & ABBREVIATIONS 2 OF 2

DWG NO.	SHEET TITLE
S-502.00	TRACK HOUSE SITE PLAN AND LAYOUT
S-503.00	TRACK HOUSE FOUNDATION PLAN
S-504.00	TRACK HOUSE FLOOR SLAB PLAN
S-505.00	TRACK HOUSE FLOOR PLAN
S-506.00	TRACK HOUSE CLERESTORY PLAN
S-507.00	TRACK HOUSE ROOF SLAB AND DETAILS
S-508.00	TRACK HOUSE EXTERIOR ELEVATIONS
S-509.00	TRACK HOUSE FOUNDATION SECTIONS
S-510.00	TRACK HOUSE TYPICAL DETAILS - 1
S-511.00	TRACK HOUSE TYPICAL DETAILS - 2
S-512.00	TRACK HOUSE STRUCTURAL DETAILS - 1
S-513.00	TRACK HOUSE STRUCTURAL DETAILS - 2
S-513A.00	TRACK HOUSE STRUCTURAL DETAILS - 3
S-514.00	RECORD OF BORINGS SHEET 1 OF 2
S-515.00	RECORD OF BORINGS SHEET 2 OF 2
P-500.00	TRACK AND FIELD BUILDING PLUMBING GENERAL NOTES, LEGEND AND ABBREVIATIONS
P-501.00	TRACK AND FIELD BUILDING PLUMBING WATER PIPING PLAN
P-502.00	TRACK AND FIELD BUILDING PLUMBING DRAINAGE PLAN
P-503.00	TRACK AND FIELD BUILDING PLUMBING ROOF PLAN
P-504.00	TRACK AND FIELD BUILDING PLUMBING RISERS NO. 1
P-505.00	TRACK AND FIELD BUILDING PLUMBING RISERS NO. 2
P-506.00	TRACK AND FIELD BUILDING PLUMBING DETAILS NO. 1
P-507.00	TRACK AND FIELD BUILDING PLUMBING DETAILS NO. 2
P-508.00	TRACK AND FIELD BUILDING PLUMBING DETAILS NO. 3
P-509.00	TRACK AND FIELD BUILDING PLUMBING DETAILS NO. 4
P-510.00	TRACK AND FIELD BUILDING PLUMBING FIXTURE SCHEDULE
M-500.00	TRACK AND FIELD BUILDING MECHANICAL GENERAL NOTES, LEGEND AND ABBREVIATIONS - 1
M-501.00	TRACK AND FIELD BUILDING MECHANICAL GENERAL NOTES, LEGEND AND ABBREVIATIONS - 2
M-502.00	TRACK AND FIELD BUILDING MECHANICAL PLAN
M-503.00	TRACK AND FIELD BUILDING MECHANICAL PIPING PLAN
M-504.00	TRACK AND FIELD BUILDING MECHANICAL ROOF PLAN
M-505.00	TRACK AND FIELD BUILDING MECHANICAL DETAILS NO. 1
M-506.00	TRACK AND FIELD BUILDING MECHANICAL DETAILS NO. 2

DWG NO.	SHEET TITLE
M-507.00	TRACK AND FIELD BUILDING MECHANICAL EQUIPMENT SCHEDULE NO. 1
M-508.00	TRACK AND FIELD BUILDING MECHANICAL EQUIPMENT SCHEDULE NO. 2
T-600.00	COVER SHEET TENNIS HOUSE
G-600.00	TENNIS HOUSE GENERAL NOTES
G-601.00	TENNIS HOUSE SYMBOLS, ABBREVIATIONS
G-602.00	TENNIS HOUSE MATERIAL INDEX & ASSEMBLY SCHEDULE
G-603.00	TENNIS HOUSE ACCESSIBILITY DIAGRAMS AND TYPICAL MOUNTING HEIGHTS
G-604.00	TENNIS HOUSE SITE KEY PLAN
A-600.00	TENNIS HOUSE SITE PLAN
A-601.00	TENNIS HOUSE FLOOR PLAN AND CLERESTORY PLAN
A-602.00	TENNIS HOUSE RCP AND ROOF PLAN
A-620.00	TENNIS HOUSE EXTERIOR ELEVATIONS
A-621.00	TENNIS HOUSE EXTERIOR ELEVATIONS
A-630.00	TENNIS HOUSE BUILDING SECTIONS
A-640.00	TENNIS HOUSE BRICK COURSING LAYOUT
A-641.00	TENNIS HOUSE BRICK WALL PATTERN
A-642.00	TENNIS HOUSE BRICK WALL PATTERN
A-643.00	TENNIS HOUSE BRICK WALL PATTERN
A-644.00	TENNIS HOUSE BRICK WALL PATTERN
A-645.00	TENNIS HOUSE BRICK WALL PATTERN
A-650.00	TENNIS HOUSE ENLARGED WALL SECTIONS
A-651.00	TENNIS HOUSE ENLARGED WALL SECTIONS
A-652.00	TENNIS HOUSE EXTERIOR DETAILS
A-653.00	TENNIS HOUSE EXTERIOR DETAILS
A-654.00	TENNIS HOUSE EXTERIOR DETAILS
A-655.00	TENNIS HOUSE EXTERIOR DETAILS
A-656.00	TENNIS HOUSE EXTERIOR FOUNTAIN DETAILS
A-657.00	TENNIS HOUSE ENLARGED EXTERIOR DETAILS
A-658.00	TENNIS HOUSE ENLARGED EXTERIOR DETAILS
A-659.00	TENNIS HOUSE GAS METER DETAIL
A-660.00	TENNIS HOUSE INTERIOR ELEVATIONS
A-661.00	TENNIS HOUSE INTERIOR ELEVATIONS
A-662.00	TENNIS HOUSE INTERIOR ELEVATIONS

DWG NO.	SHEET TITLE
A-663.00	TENNIS HOUSE INTERIOR DETAILS
A-664.00	TENNIS HOUSE INTERIOR DETAILS
A-665.00	TENNIS HOUSE INTERIOR DETAILS
A-670.00	TENNIS HOUSE DOOR SCHEDULE
A-671.00	TENNIS HOUSE WINDOW SCHEDULE
A-672.00	TENNIS HOUSE SCREEN SCHEDULE
A-673.00	TENNIS HOUSE PARTITION TYPES
A-674.00	TENNIS HOUSE FINISH SCHEDULE
E-600.00	TENNIS HOUSE BUILDING ELECTRICAL GENERAL NOTES, LEGEND AND ABBREVIATIONS
E-601.00	TENNIS HOUSE ELECTRICAL POWER PLAN
E-602.00	TENNIS HOUSE ELECTRICAL LIGHTING PLAN
E-603.00	TENNIS HOUSE ELECTRICAL ROOF PLAN
E-604.00	TENNIS HOUSE ONE-LINE DIAGRAM AND PANEL SCHEDULES
EN-605.00	TENNIS HOUSE NYCECC COMPLIANCE LIGHTING AND MECHANICAL SHEET NO. 1
EN-606.00	TENNIS HOUSE NYCECC COMPLIANCE LIGHTING AND MECHANICAL SHEET NO. 2
S-600.00	TENNIS HOUSE STRUCTURAL GENERAL NOTES, LEGENDS & ABBREVIATIONS 1 OF 2
S-601.00	TENNIS HOUSE STRUCTURAL GENERAL NOTES, LEGENDS & ABBREVIATIONS 2 OF 2
S-602.00	TENNIS HOUSE SITE PLAN AND LAYOUT
S-603.00	TENNIS HOUSE FOUNDATION PLAN
S-604.00	TENNIS HOUSE FLOOR SLAB PLAN
S-605.00	TENNIS HOUSE FLOOR PLAN
S-606.00	TENNIS HOUSE CLERESTORY PLAN
S-607.00	TENNIS HOUSE ROOF SLAB AND DETAILS
S-608.00	TENNIS HOUSE EXTERIOR ELEVATIONS
S-609.00	TENNIS HOUSE FOUNDATION SECTIONS
S-610.00	TENNIS HOUSE TYPICAL DETAILS - 1
S-611.00	TENNIS HOUSE TYPICAL DETAILS - 2
S-612.00	TENNIS HOUSE STRUCTURAL DETAILS - 1
S-613.00	TENNIS HOUSE STRUCTURAL DETAILS - 2
S-613A.00	TENNIS HOUSE STRUCTURAL DETAILS - 3
S-614.00	RECORD OF BORINGS SHEET 1 OF 3
S-615.00	RECORD OF BORINGS SHEET 2 OF 3

DWG NO.	SHEET TITLE
S-616.00	RECORD OF BORINGS SHEET 3 OF 3
P-600.00	TENNIS HOUSE PLUMBING GENERAL NOTES, LEGEND AND ABBREVIATIONS
P-601.00	TENNIS HOUSE PLUMBING WATER PIPING PLAN
P-602.00	TENNIS HOUSE PLUMBING SANITARY PIPING PLAN
P-603.00	TENNIS HOUSE PLUMBING ROOF PLAN
P-604.00	TENNIS HOUSE PLUMBING RISER NO. 1
P-605.00	TENNIS HOUSE PLUMBING RISER NO. 2
P-606.00	TENNIS HOUSE PLUMBING DETAILS NO. 1
P-607.00	TENNIS HOUSE PLUMBING DETAILS NO. 2
P-608.00	TENNIS HOUSE PLUMBING DETAILS NO. 3
P-609.00	TENNIS HOUSE PLUMBING SCHEDULE
M-600.00	TENNIS HOUSE MECHANICAL GENERAL NOTES, LEGEND AND ABBREVIATIONS - 1
M-601.00	TENNIS HOUSE MECHANICAL GENERAL NOTES, LEGEND AND ABBREVIATIONS - 2
M-602.00	TENNIS HOUSE MECHANICAL PLAN
M-603.00	TENNIS HOUSE MECHANICAL ROOF PLAN
M-604.00	TENNIS HOUSE MECHANICAL DETAILS NO. 1
M-605.00	TENNIS HOUSE MECHANICAL DETAILS NO. 2
M-606.00	TENNIS HOUSE MECHANICAL EQUIPMENT SCHEDULE
T-700.00	COVER SHEET COMFORT STATION AT EAST 10TH STREET
G-700.00	COMFORT STATION AT EAST 10TH STREET GENERAL NOTES
G-701.00	COMFORT STATION AT EAST 10TH STREET SYMBOLS, ABBREVIATIONS
G-702.00	COMFORT STATION AT EAST 10TH STREET MATERIAL INDEX & ASSEMBLY SCHEDULE
G-703.00	COMFORT STATION AT EAST 10TH STREET ACCESSIBILITY DIAGRAMS AND TYPICAL MOUNTING HEIGHTS
G-704.00	COMFORT STATION AT EAST 10TH STREET SITE KEY PLAN
A-700.00	COMFORT STATION AT EAST 10TH STREET SITE PLAN
A-701.00	COMFORT STATION AT EAST 10TH STREET FLOOR PLAN, CLERESTORY PLAN, RCP AND ROOF PLAN
A-720.00	COMFORT STATION AT EAST 10TH STREET EXTERIOR ELEVATIONS
A-721.00	COMFORT STATION AT EAST 10TH STREET EXTERIOR ELEVATIONS
A-730.00	COMFORT STATION AT EAST 10TH STREET BUILDING SECTIONS
A-740.00	COMFORT STATION AT EAST 10TH STREET BRICK COURSING LAYOUT

DWG NO.	SHEET TITLE
A-741.00	COMFORT STATION AT EAST 10TH STREET BRICK WALL PATTERN
A-742.00	COMFORT STATION AT EAST 10TH STREET BRICK WALL PATTERN
A-743.00	COMFORT STATION AT EAST 10TH STREET BRICK WALL PATTERN
A-750.00	COMFORT STATION AT EAST 10TH STREET ENLARGED WALL SECTIONS
A-751.00	COMFORT STATION AT EAST 10TH STREET EXTERIOR DETAILS
A-752.00	COMFORT STATION AT EAST 10TH STREET EXTERIOR DETAILS
A-753.00	COMFORT STATION AT EAST 10TH STREET EXTERIOR FOUNTAIN DETAILS
A-754.00	COMFORT STATION AT EAST 10TH STREET ENLARGED EXTERIOR DETAILS
A-755.00	COMFORT STATION AT EAST 10TH STREET ENLARGED EXTERIOR DETAILS
A-760.00	COMFORT STATION AT EAST 10TH STREET INTERIOR ELEVATIONS
A-761.00	COMFORT STATION AT EAST 10TH STREET INTERIOR DETAILS
A-762.00	COMFORT STATION AT EAST 10TH STREET INTERIOR DETAILS
A-770.00	COMFORT STATION AT EAST 10TH STREET DOOR SCHEDULE
A-771.00	COMFORT STATION AT EAST 10TH STREET WINDOW SCHEDULE
A-772.00	COMFORT STATION AT EAST 10TH STREET SCREEN SCHEDULE
A-773.00	COMFORT STATION AT EAST 10TH STREET PARTITION TYPES
A-774.00	COMFORT STATION AT EAST 10TH STREET FINISH SCHEDULE
E-700.00	COMFORT STATION AT EAST 10TH STREET BUILDING ELECTRICAL GENERAL NOTES, LEGEND AND ABBREVIATIONS
E-701.00	COMFORT STATION AT EAST 10TH STREET ELECTRICAL POWER PLAN
E-702.00	COMFORT STATION AT EAST 10TH STREET ELECTRICAL LIGHTING PLAN
EN-705.00	COMFORT STATION AT EAST 10TH STREET NYCECC COMPLIANCE LIGHTING AND MECHANICAL
S-700.00	COMFORT STATION AT EAST 10TH STREET STRUCTURAL GENERAL NOTES
S-701.00	COMFORT STATION AT EAST 10TH STREET STRUCTURAL TYPICAL PLANS
S-702.00	COMFORT STATION AT EAST 10TH STREET STRUCTURAL PLANS
S-703.00	COMFORT STATION AT EAST 10TH STREET STRUCTURAL PLANS
S-704.00	COMFORT STATION AT EAST 10TH STREET STRUCTURAL SECTIONS
S-705.00	COMFORT STATION AT EAST 10TH STREET STRUCTURAL SECTIONS
S-706.00	COMFORT STATION AT EAST 10TH STREET CMU WALL CONNECTION DETAILS

DWG NO.	SHEET TITLE
P-700.00	COMFORT STATION AT EAST 10TH STREET BUILDING PLUMBING GENERAL NOTES, LEGEND AND ABBREVIATIONS
P-701.00	COMFORT STATION AT EAST 10TH STREET PLUMBING WATER PIPING PLAN
P-702.00	COMFORT STATION AT EAST 10TH STREET SANITARY UNDERSLAB PIPING PLAN
P-703.00	COMFORT STATION AT EAST 10TH STREET SANITARY AND VENT PIPING PLAN
P-704.00	COMFORT STATION AT EAST 10TH STREET PLUMBING RISER NO. 1
P-705.00	COMFORT STATION AT EAST 10TH STREET PLUMBING DETAILS NO. 1
P-706.00	COMFORT STATION AT EAST 10TH STREET PLUMBING DETAILS NO. 2
P-707.00	COMFORT STATION AT EAST 10TH STREET PLUMBING DETAILS NO. 3
P-708.00	COMFORT STATION AT EAST 10TH STREET PLUMBING FIXTURE SCHEDULE
M-700.00	COMFORT STATION AT EAST 10TH STREET MECHANICAL GENERAL NOTES, LEGEND AND ABBREVIATIONS - 1
M-701.00	COMFORT STATION AT EAST 10TH STREET MECHANICAL GENERAL NOTES, LEGEND AND ABBREVIATIONS - 2
M-702.00	COMFORT STATION AT EAST 10TH STREET MECHANICAL PLAN AND SECTIONS
M-703.00	COMFORT STATION AT EAST 10TH STREET MECHANICAL ROOF PLAN
M-704.00	COMFORT STATION AT EAST 10TH STREET MECHANICAL DETAILS NO. 1
M-705.00	COMFORT STATION AT EAST 10TH STREET MECHANICAL DETAILS NO. 2
M-706.00	COMFORT STATION AT EAST 10TH STREET MECHANICAL SCHEDULES
RW001	RECOVERY WELL DETAILS AND NOTES
RW010	RECOVERY WELL PLAN REACH I
RW011	RECOVERY WELL PLAN REACH J
HW000	HIGHWAY RECONSTRUCTION TABLE OF CONTENTS
HW101	HIGHWAY DEMOLITION PLAN SEGMENT 1 - REACH B STA. 16+18 - 23+02
HW102	HIGHWAY DEMOLITION PLAN SEGMENT 1 - REACH C STA. 23+02 - 28+49
HW103	HIGHWAY DEMOLITION PLAN SEGMENT 1 - REACH D STA. 28+49 - 36+55
HW104	HIGHWAY DEMOLITION PLAN SEGMENT 1 - REACH E STA. 36+55 - 45+50

DWG NO.	SHEET TITLE
HW105	HIGHWAY DEMOLITION PLAN SEGMENT 2 - REACH F STA. 45+50 - 53+41
HW106	HIGHWAY DEMOLITION PLAN SEGMENT 2 - REACH G STA. 53+41 - 62+29
HW107	HIGHWAY DEMOLITION PLAN SEGMENT 2 - REACH H STA. 62+29 - 71+48
HW108	HIGHWAY DEMOLITION PLAN SEGMENT 3 - REACH I STA. 71+48 - 79+51
HW109	HIGHWAY DEMOLITION PLAN SEGMENT 3 - REACH J STA. 79+51 - 82+95
HW110	HIGHWAY DEMOLITION PLAN SEGMENT 3 - REACH K STA. 82+95 - 89+50
HW120	HIGHWAY DEMOLITION TYPICAL SECTIONS
HW200	BARRIER ALIGNMENT AND DATA - SEGMENT 1
HW201	BARRIER ALIGNMENT AND DATA - SEGMENT 3
HW300	HIGHWAY RECONSTRUCTION PLAN SEGMENT 1 - REACH A STA. 9+07 - 16+18
HW301	HIGHWAY RECONSTRUCTION PLAN SEGMENT 1 - REACH B STA. 16+18 - 23+02
HW302	HIGHWAY RECONSTRUCTION PLAN SEGMENT 1 - REACH C STA. 23+02 - 28+49
HW303	HIGHWAY RECONSTRUCTION PLAN SEGMENT 1 - REACH D STA. 28+49 - 36+55
HW304	HIGHWAY RECONSTRUCTION PLAN SEGMENT 1 - REACH E STA. 36+55 - 45+50
HW308	HIGHWAY RECONSTRUCTION PLAN SEGMENT 3 - REACH I STA. 71+48 - 79+51
HW309	HIGHWAY RECONSTRUCTION PLAN SEGMENT 3 – REACH J STA. 79+51 - 82+95
HW310	HIGHWAY RECONSTRUCTION PLAN SEGMENT 3 – REACH K STA. 82+95 - 89+50
HW500	HIGHWAY RECONSTRUCTION PAVEMENT MARKINGS PLAN SEGMENT 1 - REACH A STA. 9+07 - 16+18
HW501	HIGHWAY RECONSTRUCTION PAVEMENT MARKINGS PLAN SEGMENT 1 - REACH B STA. 16+18 - 23+02
HW502	HIGHWAY RECONSTRUCTION PAVEMENT MARKINGS PLAN SEGMENT 1 - REACH C STA. 23+02 - 28+49
HW503	HIGHWAY RECONSTRUCTION PAVEMENT MARKINGS PLAN SEGMENT 1 - REACH D STA. 28+49 - 36+55

DWG NO.	SHEET TITLE
HW504	HIGHWAY RECONSTRUCTION PAVEMENT MARKINGS PLAN SEGMENT 1 - REACH E STA. 36+55 - 45+50
HW508	HIGHWAY RECONSTRUCTION PAVEMENT MARKINGS PLAN SEGMENT 3 - REACH I STA. 71+48 - 79+51
HW509	HIGHWAY RECONSTRUCTION PAVEMENT MARKINGS PLAN SEGMENT 3 - REACH J STA. 79+51 - 82+95
HW510	HIGHWAY RECONSTRUCTION PAVEMENT MARKINGS PLAN SEGMENT 3 - REACH K STA. 82+95 - 89+50
HW700	TYPICAL CONSTRUCTION SECTIONS
HW701	SINGLE-SLOPE CONCRETE HALF SECTION BARRIER
HW702	SINGLE-SLOPE CONCRETE MEDIAN BARRIER
HW703	HPBO (MOD.) CURROGATED-BEAM MEDIAN BARRIER
HW720	TRANSITION TYPE 1 - JERSEY SHAPE AND SINGLE-SLOPE CONCRETE WIDE MEDIAN BARRIER
HW721	TRANSITION TYPE 2 - SINGLE-SLOPE CONCRETE AND HPB (MOD.) CORRUGATED-BEAM MEDIAN BARRIER
HW722	TRANSITION TYPE 3 - JERSEY SHAPE AND SINGLE-SLOPE CONCRETE HALF-SECTION BARRIER
HW723	TRANSITION TYPE 4 - EXTRA-WIDE AND WIDE SINGLE-SLOPE CONCRETE MEDIAN BARRIER
HW724	TRANSITION TYPE 5 - HALF-SECTION TO FULL-SECTION SINGLE-SLOPE CONCRETE BARRIER
HW750	MISCELLANEOUS HIGHWAY RECONSTRUCTION DETAILS (1 OF 2)
HW751	MISCELLANEOUS HIGHWAY RECONSTRUCTION DETAILS (2 OF 2)
TC000	MPT TABLE OF CONTENTS
TC100	MPT GENERAL NOTES, LEGEND AND ABBREVIATIONS
TC101	PROJECT GENERAL CONSTRUCTION PLAN
TC102	GREENWAY REROUTING PLAN
TC103	EMERGENCY EGRESS PLAN
TC104	TEMPORARY SIGNS TABLE AND SPECIAL TRAFFIC CONTROL SIGN DETAILS
TC105	MPT PROTECTION DEVICES
TC106	ADVANCE WARNING SIGNS DETAILS - HIGHWAY
TC107	SEGMENT 1 - MOVEABLE BARRIERS DEPLOYMENT PLAN (1 OF 2)
TC108	SEGMENT 1 - MOVEABLE BARRIERS DEPLOYMENT PLAN (2 OF 2)
TC109	SEGMENT 3 - MOVEABLE BARRIERS DEPLOYMENT PLAN (1 OF 2)
TC110	SEGMENT 3 - MOVEABLE BARRIERS DEPLOYMENT PLAN (2 OF 2)
TC111	MOVEABLE BARRIERS DEPLOYMENT SECTIONS (1 OF 2)

DWG NO.	SHEET TITLE
TC112	MOVEABLE BARRIERS DEPLOYMENT SECTIONS (2 OF 2)
TC113	MPT TYPICAL APPLICATION - HIGHWAY TYPE I WORK
TC114	MPT TYPICAL APPLICATION - HIGHWAY TYPE II WORK
TC115	MPT TYPICAL APPLICATIONS - STREETS
TC116	FDR DRIVE FULL CLOSURE OVERHEAD WORK LOCATION
TC117	FDR DRIVE FULL CLOSURE MPT TYPICAL APPLICATION
TC118	FDR DRIVE FULL CLOSURE SEGMENT 1 OVERHEAD WORK DETOUR PLAN
TC119	FDR DRIVE FULL CLOSURE SEGMENT 3 OVERHEAD WORK DETOUR PLAN
TC120	REACH A MPT PLAN MONTGOMERY STREET UTILITY CROSSING STAGE 1
TC121	REACH A MPT PLAN MONTGOMERY STREET UTILITY CROSSING STAGE 2
TC122	REACH A MPT PLAN SOUTH STREET WATER MAIN RELOCATION
TC123	REACH A MPT PLAN FDR DRIVE ON-RAMP UTILITY CROSSING 1 STAGE 1
TC124	REACH A MPT PLAN FDR DRIVE ON-RAMP UTILITY CROSSING 1 STAGE 2
TC125	REACH A MPT PLAN FDR DRIVE ON-RAMP UTILITY CROSSING 2
TC126	REACH A MPT PLAN FLOOD PROTECTION STAGE 1
TC127	REACH A MPT PLAN FLOOD PROTECTION STAGE 2
TC128	REACH A MPT PLAN FLOOD PROTECTION STAGE 3
TC129	REACH A MPT PLAN SOUTH STREET MANHOLE FLOODPROOFING
TC130	REACH A MPT PLAN MONTGOMERY STREET MANHOLE FLOODPROOFING
TC131	REACH B MPT PLAN FDR DRIVE SEWER RECONSTRUCTION
TC132	REACH B MPT PLAN FLOOD PROTECTION
TC133	REACH B MPT PLAN OVERHEAD SIGN STRUCTURE #1 WEST FOUNDATION
TC134	REACH C CORLEARS HOOK BRIDGE DEMOLITION MPT STAGING
TC135	REACH C MPT PLAN CORLEARS HOOK BRIDGE DEMOLITION STAGE 1
TC136	REACH C MPT PLAN CORLEARS HOOK BRIDGE DEMOLITION STAGE 2
TC137	REACH C MPT PLAN CORLEARS HOOK BRIDGE DEMOLITION STAGE 3
TC138	REACH C MPT PLAN FDR DRIVE NORTHBOUND WALL CONSTRUCTION
TC139	REACH D MPT PLAN OVERHEAD SIGN STRUCTURE #2 WEST FOUNDATION
TC140	REACH C & D MPT PLAN CORLEARS HOOK PARK

DWG NO.	SHEET TITLE
TC141	REACH E DELANCEY STREET BRIDGE DEMOLITION MPT STAGING
TC142	REACH E MPT PLAN DELANCEY STREET BRIDGE DEMOLITION STAGE 1
TC143	REACH E MPT PLAN DELANCEY STREET BRIDGE DEMOLITION STAGE 2
TC144	REACH E MPT PLAN DELANCEY STREET BRIDGE DEMOLITION STAGE 3
TC145	REACH E MPT PLAN DELANCEY STREET BRIDGE DEMOLITION STAGE 4
TC146	REACH E MPT PLAN DELANCEY STREET PARKING LOT ENTRANCE RELOCATION
TC147	REACH E MPT PLAN DELANCEY STREET WATER MAIN RELOCATIONS
TC148	REACH E MPT PLAN DELANCEY STREET BRIDGE (WEST ABUTMENT) CONSTRUCTION
TC149	REACH E MPT PLAN DELANCEY STREET RECONSTRUCTION
TC150	REACH G MPT PLAN E. HOUSTON STREET PEDESTRIAN RAMP DEMOLITION
TC151	REACH F MPT PLAN E. HOUSTON STREET RETAINING WALL – SOUTH PORTION
TC152	REACH G MPT PLAN E. HOUSTON STREET RETAINING WALL – MIDDLE PORTION
TC153	REACH G MPT PLAN E. HOUSTON STREET RETAINING WALL – NORTH PORTION
TC155	REACH I MPT PLAN E. 10TH BRANCH INTERCEPTOR STAGE 1
TC156	REACH I MPT PLAN E. 10TH BRANCH INTERCEPTOR STAGE 2
TC157	REACH I MPT PLAN E. 10TH BRANCH INTERCEPTOR STAGE 3
TC158	REACH I MPT PLAN E. 10TH BRANCH INTERCEPTOR STAGE 4
TC159	REACH I MPT PLAN E. 10TH BRANCH INTERCEPTOR STAGE 5
TC160	REACH I MPT PLAN E. 10TH STREET UTILITY RELOCATIONS STAGE 1
TC161	REACH I MPT PLAN E. 10TH STREET UTILITY RELOCATIONS STAGE 2
TC162	REACH I MPT PLAN E. 10TH STREET UTILITY RELOCATIONS STAGE 3
TC163	REACH I MPT PLAN E. 10TH STREET WATER MAIN RELOCATION STAGE 1
TC164	REACH I MPT PLAN E. 10TH STREET WATER MAIN RELOCATION STAGE 2
TC165	REACH I MPT PLAN E. 10TH STREET WATER MAIN RELOCATION STAGE 3
TC166	SEGMENT 3 MPT PLAN FDR DRIVE MEDIAN DEMOLITION
TC167	REACH I E. 10TH STREET BRIDGE DEMOLITION MPT STAGING

DWG NO.	SHEET TITLE
TC168	REACH I MPT PLAN E. 10TH STREET BRIDGE DEMOLITION STAGE 1
TC169	REACH I MPT PLAN E. 10TH STREET BRIDGE DEMOLITION STAGE 2
TC170	REACH I MPT PLAN E. 10TH STREET BRIDGE DEMOLITION STAGE 3
TC171	REACH I MPT PLAN E. 10TH STREET BRIDGE (WEST ABUTMENT) CONSTRUCTION
TC172	REACH I MPT PLAN E. 10TH STREET RECONSTRUCTION STAGE 1
TC173	REACH I MPT PLAN E. 10TH STREET RECONSTRUCTION STAGE 2
TC174	REACH I MPT PLAN E. 10TH STREET RECONSTRUCTION STAGE 3
TC175	REACH I MPT PLAN E. 10TH STREET RECONSTRUCTION STAGE 4
TC176	REACH I MPT PLAN E. 10TH STREET RECONSTRUCTION STAGE 5
TC177	REACH I MPT PLAN E. 10TH STREET RECONSTRUCTION STAGE 6
TC178	REACH J MPT PLAN OVERHEAD SIGN STRUCTURE #8S EAST FOUNDATION
TC179	REACH J MPT PLAN OVERHEAD SIGN STRUCTURE #8S WEST FOUNDATION
TC180	REACH J MPT PLAN EAST RIVER PARK RETAINING AND FLOODWALL CONSTRUCTION
TC181	REACH K MPT PLAN CON EDISON INTERNAL DRAINAGE
TC182	REACH K MPT PLAN E. 13TH STREET UTILITY RELOCATION
TC183	REACH K ADVANCED TRAFFIC CONTROL LAYOUT
TC184	REACH K MPT PLAN CON EDISON FLOOD PROTECTION STAGE 1
TC185	REACH K MPT PLAN CON EDISON FLOOD PROTECTION STAGE 2
TC186	REACH K MPT PLAN CON EDISON FLOOD PROTECTION STAGE 3
TC187	REACH K MPT PLAN FDR DRIVE FLOOD GATES STAGE 1
TC188	REACH K MPT PLAN FDR DRIVE FLOOD GATES STAGE 2
TC189	REACH K MPT PLAN FDR DRIVE FLOOD GATES STAGE 3
TC190	FDR DRIVE NB CENTER LANE PAVEMENT RECONSTRUCTION
TC191	FDR DRIVE NB RIGHT LANE PAVEMENT RECONSTRUCTION
TC192	FDR DRIVE SB CENTER LANE PAVEMENT RECONSTRUCTION
TC193	FDR DRIVE SB RIGHT LANE PAVEMENT RECONSTRUCTION
TC194	FDR DRIVE NORTHBOUND MANHOLE FLOODPROOFING
TC195	FDR DRIVE NORTHBOUND (EXIT 3) ON-RAMP DETOUR PLAN
TC196	SOUTH STREET DETOUR PLAN
TC197	FDR DRIVE NORTHBOUND (EXIT 5) OFF-RAMP DETOUR PLAN
TC198	FDR DRIVE NORTHBOUND (EXIT 5) ON-RAMP DETOUR PLAN
OS000	OVERHEAD SIGN STRUCTURE TABLE OF CONTENTS

DWG NO.	SHEET TITLE
OS100	OVERHEAD SIGN STRUCTURE LOCATION PLAN
OS101	FDR DR TRAFFIC CONTROL EXISTING CONDITION PLAN (1 OF 2)
OS102	FDR DR TRAFFIC CONTROL EXISTING CONDITION PLAN (2 OF 2)
OS103	TRAFFIC SIGNS LOCATION PLAN - #1 AND #2
OS104	TRAFFIC SIGNS LOCATION PLAN - #3N
OS105	TRAFFIC SIGNS LOCATION PLAN - #8S AND #8N
OS106	GROUND MOUNTED SIGN ELEVATION - #1 AND #2
OS107	GROUND MOUNTED SIGN ELEVATION - #3N
OS108	GROUND MOUNTED SIGN ELEVATION - #8N AND #8S
OS109	SIGN TEXT DATA SHEET
OS110	SIGN PANEL DETAILS (1 OF 2)
OS111	SIGN PANEL DETAILS (2 OF 2)
OS150	OVERHEAD SIGN STRUCTURES SPAN STRUCTURE
OS151	OVERHEAD SIGN STRUCTURES SPAN STRUCTURES SELECTION TABLES
OS152	OVERHEAD SIGN STRUCTURES SPAN STRUCTURES FOUNDATIONS
OS153	OVERHEAD SIGN STRUCTURES SPAN STRUCTURES POST DETAILS SHEET 1 OF 2
OS154	OVERHEAD SIGN STRUCTURES SPAN STRUCTURES POST DETAILS SHEET 2 OF 2
OS155	OVERHEAD SIGN STRUCTURES SPAN STRUCTURES TRUSS DETAILS SHEET 1 OF 2
OS156	OVERHEAD SIGN STRUCTURES SPAN STRUCTURES TRUSS DETAILS SHEET 2 OF 2
OS157	OVERHEAD SIGN STRUCTURES CANTILEVER STRUCTURES
OS158	OVERHEAD SIGN STRUCTURES CANTILEVER STRUCTURES SELECTION TABLES
OS159	OVERHEAD SIGN STRUCTURES CANTILEVER STRUCTURES FOUNDATION
OS160	OVERHEAD SIGN STRUCTURES CANTILEVER STRUCTURES BOX CONNECTION DETAILS
OS161	OVERHEAD SIGN STRUCTURES TRUSSED ARM CONNECTION DETAILS
OS162	OVERHEAD SIGN STRUCTURES TYPICAL BASE AND CAP DETAILS
OS163	OVERHEAD SIGN STRUCTURES SIGN PANEL ATTACHMENT DETAILS
OS164	OVERHEAD SIGN STRUCTURES FOUNDATION & PIER DETAILS 1 OF 2
OS165	OVERHEAD SIGN STRUCTURES FOUNDATION & PIER DETAILS 2 OF 2
OS165A	OVERHEAD SIGN STRUCTURES SECTIONS AND DETALS

DWG NO.	SHEET TITLE
OS166	OVERHEAD SIGN STRUCTURES STRUCTURAL AND GEOTECHNICAL NOTES
CW306	CON EDISON LINE WRAPPING SEGMENT 2 - REACH G STA. 58+94 - 69+33
CW307	CON EDISON LINE WRAPPING SEGMENT 2 - REACH H STA. 69+33 - 77+86
CW308	CON EDISON LINE WRAPPING SEGMENT 3 - REACH I STA. 77+86 - 86+97
CW309	CON EDISON LINE WRAPPING SEGMENT 3 - REACH J STA. 86+97 - 91+88
CW600	CON EDISON LINE WRAPPING TYPICAL SECTIONS
AT302	AUTOTURNS - DEP ACCESS SEGMENT 1 - REACH C STA. 23+82 - 30+44
AT303	AUTOTURNS - DEP ACCESS SEGMENT 1 - REACH D STA. 30+44 - 39+99
AT304	AUTOTURNS - DEP ACCESS SEGMENT 1 - REACH E STA. 39+99 - 49+94
AT305	AUTOTURNS - DEP ACCESS SEGMENT 2 - REACH F STA. 49+94 - 58+67
AT306	AUTOTURNS - DEP ACCESS SEGMENT 2 - REACH G STA. 58+67 - 69+33
AT307	AUTOTURNS - DEP ACCESS SEGMENT 2 - REACH H STA. 69+33 - 77+58
AT308	AUTOTURNS - DEP ACCESS SEGMENT 3 - REACH I STA. 77+58 - 86+64
AT320	AUTOTURNS - SU30 DELANCEY STREET
AT321	AUTOTURNS - SU30 EAST 10TH STREET
F852A	TRANSITION 1 REACH B REINFORCING DETAILS
F857A	TRANSITION 2 REACH B REINFORCING DETAILS
FG240A	FDR DRIVE SWING GATE ROADWAY BARRIER PLAN
HW752	MISCELLANEOUS HIGHWAY RECONSTRUCTION DETAILS (3 OF 3)
BD207C	DELANCEY STREET BRIDGE, EAST RIVER HOUSES PARKING LOT, ELECTRICAL DEMOLITION SITE PLAN
BD207D	DELANCEY STREET BRIDGE, EAST RIVER HOUSES PARKING LOT, ELECTRICAL SITE PLAN
BD207E	DELANCEY STREET BRIDGE, EAST RIVER HOUSES PARKING LOT, DETAILS – 1
BD207F	DELANCEY STREET BRIDGE, EAST RIVER HOUSES PARKING LOT, DETAILS – 2
PCC350A	PARALLEL CONVEYANCE, EAST 10TH STREET, MICROTUNNEL PRE-SUPPORT
WS371A	CUT-OFF WALL PILE TESTING SCHEDULE
WS441A	CUT-OFF WALL AND DEADMAN PILE SCHEDULE
WS501A	WATERFRONT ESPLANADE, PROPOSED PILE DETAILS, SHEET 2A OF 2
WS683A	WATERFRONT ESPLANADE DECK TYPICAL SECTIONS, SHEET 4A OF 4

DWG NO.	SHEET TITLE
WS691B	WATERFRONT ESPLANADE DRAINAGE DETAILS
PUE352	10TH STREET SIGN STRUCTURE 8N, NORTH BOUND AND PROPOSED OSS – ITS EZ PASS RISER DIAGRAM
BC150A	TYPICAL BRIDGE LIGHT POLE AND JUNCTION BOX DETAILS
PCS800	EAST 10TH STREET AND TRENCHLESS CROSSING FOUNDATION RECOMMENDATIONS
WS723A	WATERFRONT ESPLANADE, TRANSVERSE RETAINING WALL DETAILS, SHEET 2A OF 2
WS902A	ESPLANADE BONDING CABLE AND RACEWAY PLAN, SECTIONS AND DETAILS
WS902B	ESPLANADE BONDING CABLE AND RACEWAY SECTIONS AND DETAILS – SHEET 1 OF 2
WS902C	ESPLANADE BONDING CABLE AND RACEWAY SECTIONS AND DETAILS – SHEET 2 OF 2
JB1-JB78	JOINT BID PACKAGE
PH001-PH021	PHASING DRAWINGS
SHEET 1 of 1	EP7 GAS CAPITAL PLAN
SH-0 - SHEET NO. 66	NYC PARKS STANDARD DETAILS

Standard Drawings

Note: See the "Specifications and Standards of New York City" sheet in Volume 3 of this contract for obtaining Standard Drawings.

NYCDOT Standard Details of Construction

DRAWING NO.	DESCRIPTION
H-1003B	PEDESTRIAN CROSSWALKS-MALL TYPE B
H-1004	TYPICAL TEMPORARY PEDESTRIAN PASSAGEWAY IN ROADWAY AREA DURING CONSTRUCTION
H-1005	BUS STOP IN NEW ROADWAY
H-1010	STEEL FACED CONCRETE CURB, STEEL FACING TYPE D
H-1011	SIDEWALK PEDESTRIAN RAMPS
H-1012	TIMBER CURB
H-1013	ILLUMINATED TIMBER BARRICADE
H-1014	TEMPORARY PEDESTRIAN STEEL BARRICADE
H-1015	STEEL FACED DROP CURB DRIVEWAYS
H-1017	BAR PICKET FENCE (4'-0" HIGH)
H-1034	TYPICAL CONSTRUCTION JOINTS FOR CONCRETE BASE FOR PAVEMENT
H-1036	CONCRETE POURED-IN-PLACE MALL CURB
H-1037	UNDER SIDEWALK DRAIN
H-1038	TYPE III BREAKAWAY BARRICADE
H-1040	TRANSVERSE CONSTRUCTION JOINTS FOR CONCRETE BASE
H-1044	CONCRETE CURB
H-1045	CONCRETE SIDEWALK
H-1046	STREET TREE PLANTING DETAIL TYPE 1
H-1046A	PROTECTIVE TREE BARRIER
H-1047	TYPICAL CURB DETAIL AT EXISTING TREES
H-1049	PLASTIC BARREL
H-1051	TEMPORARY WOODEN STEPS
H-1053	DETAILS FOR CONSTRUCTING AREAS OF ADJUSTMENT AND TRANSITION SECTIONS
H-1054	LIMITS OF MEASUREMENT FOR PAYMENT OF TEMPORARY ASPHALT PAVEMENT

DRAWING NO.	DESCRIPTION
H-1055	PAVEMENT KEY TYPE A, B-1, B-2, C
H-1057	TEMPORARY STORAGE AREA
MS-1000	NEW YORK CITY COMPARISON OF DATUM PLATES
MS-1001	SIDEWALK PAVEMENT LIMITS
MS-1003	TYPICAL ROADWAY CROSS-SECTION/RESURFACING
MS-1005	ADJUSTMENT AT CATCH BASINS

NYCDEP Sewer Design Standards

DRAWING NO.	DESCRIPTION
SE1	STANDARD FOR VITRIFIED CLAY PIPE ON CONCRETE CRADLE ON EARTH OR ON ROCK
SE3	STANDARD FOR CIRCULAR REINFORCED CONCRETE PIPE ON CONCRETE CRADLE ON EARTH OR ON ROCK
SE11	STANDARD FOR MANHOLE ON 8” DIA. TO 30” DIA. PIPE SEWERS IN DRY LOCATION
SE12	STANDARD FOR MANHOLE ON 8” DIA. TO 30” DIA. PIPE SEWERS ON PILE IN DRY LOCATION
SE14	STANDARD FOR MANHOLE ON 8” DIA. TO 30” DIA. PIPE SEWERS IN WET LOCATION
SE28A, SE28B, SE28C, & SE28D	STANDARD FOR 4'-0" DIAMETER PRECAST MANHOLE (4 DWGS)
SE31A & SE31B	STANDARD FOR PRECAST MANHOLE DETAILS (2 DWGS)
SE32	STANDARD FOR ALTERNATE MONOLITHIC BASE SECTION FOR PRECAST MANHOLES (POURED IN PLACE)
SE35	STANDARD FOR REMOVABLE PRECAST REINFORCED CONCRETE SLAB
SE39	STANDARD FOR 27" DIAMETER CAST IRON MANHOLE FRAME AND COVER
SE40	STANDARD FOR 27" DIAMETER CAST IRON EXTENSION RING FOR 27" DIAMETER MANHOLE FRAME AND COVER
SE43	STANDARD FOR CAST IRON MANHOLE STEP
SE44	STANDARD FOR CAST IRON MANHOLE STEP (BOLT-ON TYPE)

DRAWING NO.	DESCRIPTION
SE45	STANDARD FOR CIRCULAR CAST IRON MANHOLE STEP (BOLT-ON TYPE)
SE46	STANDARD FOR PLASTIC MANHOLE STEP
SE47	STANDARD FOR TYPE 1 CATCH BASIN (WITH CURB PIECE)
SE48	STANDARD FOR TYPE 2 CATCH BASIN (WITHOUT CURB PIECE)
SE49B	STANDARD FOR TYPE 3 CATCH BASIN (WITH CURB PIECE)
SE52A & SE52B	STANDARD FOR PRECAST TYPE 1 CATCH BASIN (2 DWGS)
SE53A	STANDARD FOR PRECAST TYPE 2 CATCH BASIN
SE53B	STANDARD FOR SPLIT PRECAST TYPE 2 CATCH BASIN
SE54B	STANDARD FOR PRECAST TYPE 3 CATCH BASIN (WITH CURB PIECE)
SE55C	STANDARD FOR PRECAST DOUBLE CATCH BASIN
SE57	STANDARD FOR CAST IRON FRAME FOR CATCH BASINS (WITH CURB PIECE)
SE58A	STANDARD FOR CAST IRON FRAME FOR CATCH BASINS (WITHOUT CURB PIECE)
SE58B	STANDARD FOR CAST IRON FRAME FOR TYPE 3 CATCH BASINS (WITH CURB PIECE)
SE59A & SE59B	STANDARD FOR CAST IRON GRATING, BACK PLATE, AND CURB PIECE FOR CATCH BASINS (2 DWGS)
SE60	STANDARD FOR CAST IRON HOOD AND HOOKS FOR CATCH BASINS
SE61	STANDARD FOR DUCTILE IRON PIPE ALTERNATIVE
SE62	STANDARD FOR HOUSE CONNECTIONS
SE67	STANDARD FOR CONSTRUCTION OF CATCH BASIN (NO EXISTING CURB)
SE70	STANDARD FOR MINIMUM LOAD DIAGRAM FOR NON-WATERTIGHT SHEETING DESIGN
SE71	STANDARD FOR MINIMUM LOAD DIAGRAM FOR WATERTIGHT SHEETING DESIGN

NYCDEP Water Main Standard Drawings

DRAWING NO.	DESCRIPTION
10240-A-Z	VALVE BOX SKIRT, CAST IRON
10241-A-Z	HYDRANT VALVE BOX, CAST IRON
11576-A-Z	FOUNDATIONS FOR VALVE BOXES
13547-B-Z	WIDE FLANGE MANHOLE HEAD & COVER, CAST IRON
22809-Z	HYDRANT DRAIN BASE
31050-Z	STANDARD METHODS FOR HYDRANT DRAINAGE, 31050-Z SUPERSEDES 11522-Z
44292-B-Z	GRAVEL OR BROKEN STONE BEDDING AND FILTER FABRIC INSTALLATION FOR DUCTILE CAST IRON PIPES
44387-Z-B	RODDING ALL SPECIAL CASTINGS, LEAD & MECHANICAL JOINTS ON LOW PRESSURE WATER MAINS, PUSH-ON JOINT PIPE
45161-A-Z	STANDARD STEEL HYDRANT FENDER
45700-W	STANDARD SUPPORTS FOR WATER MAINS INSTALLED AT SUBWAYS AND IN EXTREMELY YIELDING SOIL
46464-Z	METHOD FOR PROTECTING D.I. WATER MAINS WITH SHALLOW (LESS THAN 24") COVER
WM0401	PAVEMENT EXCAVATION LIMITS FOR PERMANENT RESTORATION IN STREETS NOT PROTECTED BY N.Y.C. ADM. CODE § 19.144, WATER MAINS 20" AND LESS IN DIAMETER
WM0402	PAVEMENT EXCAVATION LIMITS FOR PERMANENT RESTORATION IN STREETS PROTECTED BY N.Y.C. ADM. CODE § 19.144, WATER MAINS 20" AND LESS IN DIAMETER
WM0403	PAVEMENT EXCAVATION LIMITS FOR PERMANENT RESTORATION, WATER MAINS 24" AND LARGER IN DIAMETER

(NO TEXT ON THIS PAGE)

CITY OF NEW YORK
DEPARTMENT OF DESIGN AND CONSTRUCTION
DIVISION OF INFRASTRUCTURE

ADDENDA CONTROL SHEET

BID SUBMISSION DATE / TIME: **February 8, 2021, 8:30 AM – 11:00 AM**
BID OPENING DATE: **February 8, 2021**

PROJECT NO.: **SANDRESM1**

DESCRIPTION: **INSTALLATION OF EAST SIDE COASTAL RESILIENCY FROM MONTGOMERY STREET TO EAST 15TH STREET**

Addendum		Addendum Contains:					
No.	Date	Revised Bid Date/Time	Revised Bid Schedule	Questions & Responses	Additional Amendments	Drawings (number)	General Counsel Approval
1	12/28/2020	☐	☐	☐	☒	☐ (0)	
2		☐	☐	☐	☐	☐ (0)	
3		☐	☐	☐	☐	☐ (0)	
4		☐	☐	☐	☐	☐ (0)	
5		☐	☐	☐	☐	☐ (0)	
6		☐	☐	☐	☐	☐ (0)	
7		☐	☐	☐	☐	☐ (0)	
8		☐	☐	☐	☐	☐ (0)	
		☐	☐	☐	☐	☐ (0)	
		☐	☐	☐	☐	☐ (0)	
		☐	☐	☐	☐	☐ (0)	
		☐	☐	☐	☐	☐ (0)	

The Table above is a guide. Refer to the referenced Addendum for specific information.

ATTACH TO CONTRACT DOCUMENTS
THE CITY OF NEW YORK

DEPARTMENT OF DESIGN AND CONSTRUCTION
INFRASTRUCTURE DIVISION
BUREAU OF DESIGN

PROJECT ID: SANDRESM1

INSTALLATION OF EAST SIDE COASTAL RESILIENCY FROM MONTGOMERY STREET TO EAST 15TH STREET TOGETHER WITH ALL WORK INCIDENTAL THERETO

BOROUGH OF MANHATTAN

ADDENDUM NO. 1

DATED: 12/28/2020
THIS ADDENDUM IS HEREBY MADE A PART OF THE CONTRACT DOCUMENTS

1. **Refer** to Volume 3;
   Incorporate the attached revised specifications, as detailed in Attachment C.
   [Number of attachments: 16 pages, 1 attachment]

Note the convention for SANDRESM1 Addenda. Not all Addenda will have all attachments.
Attachment A – Non-Bid Schedule Changes to Volume 1
Attachment B – Changes to Bid Schedule (Volume 1)
Attachment C – Changes to Specifications (Volume 3)
Attachment D – Changes to Drawings

END OF ADDENDUM NO. 1

By signing in the space provided below, the bidder acknowledges receipt of this Addendum consisting of one (1) page and SEVENTEEN (17) page of attachments.

THIS ADDENDUM MUST BE SIGNED BY ALL BIDDERS AND ATTACHED TO THEIR BID

Richard Jones, P.E. CWI CDT
Executive Director

IPC Resiliency Partners
Name of Bidder

By:

Attachment C - Revisions to Specifications

	Refer to These Parts of the Contract Books			Changes		Description of Changes
#	Volume	Package	Section	Remove Page(s)	Insert Page(s)	
1	3	S-Pages	B9	---	"Comfort Station Construction (1994)" Reference Document, 16 pages	Reference Document "Comfort Station Construction (1994)", part of the documents listed as Appendix A on Contract Drawing G018, was not properly uploaded to the DDC Bid Documents Online website with the rest of the bid documents, and is hereby attached.
2						
3						
4						
5						
6						
7						
8						

The descriptions above are only a guide. The actual text of the specifications governs.

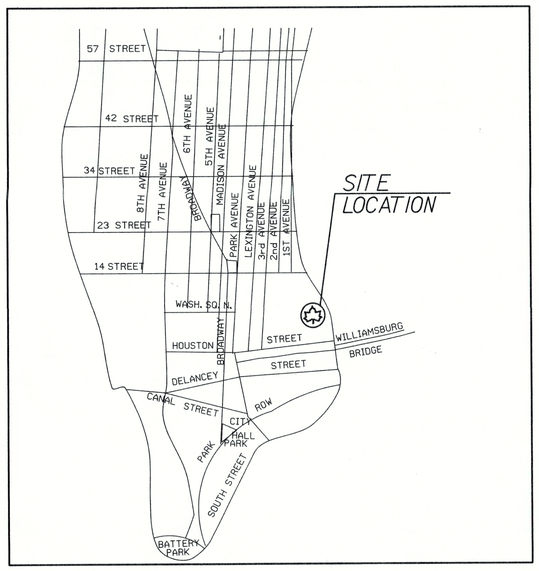

LOCATION PLAN

CITY OF NEW YORK
PARKS & RECREATION
OLMSTED CENTER
FLUSHING MEADOWS - CORONA PARK
FLUSHING, NEW YORK 11368

PARKS & RECREATION

Henry J. Stern 28 February
HENRY J. STERN COMMIS

Diana Chapin D.
DIANA CHAPIN DEPUTY C

CONTRACT DRAWINGS FOR

THE CONSTRUCTION OF A COMFORT STATIO IN EAST RIVER PARK LOCATED OPPOSITE 10th STREET BETWEEN F.D.R. DRIVE & THE EAST RIVER

BOROUGH OF MANHATTAN

CONTRACT NO. M144-194

LIST OF DRAWINGS

1. TITLE SHEET
2. L1 SURVEY
3. L2 REMOVALS PLAN
4. L3 LAYOUT & PLANTING PLAN / GRADING PLAN
5. L4 SITE UTILITIES PLAN
6. L5 BORING LOCATION PLAN
7. A2 GENERAL NOTES & SCHEDULES
8. A3 PLANS, ELEVATIONS SECTIONS & SCHEDULES
9. A4 WALL SECTIONS
10. A5 DOOR & WINDOW DETAILS
11. A6 MISCELLANEOUS DETAILS
12. S1 STEEL FRAMING & FOUNDATION DETAILS
13. PAVEMENT DETAILS
14. CURB DETAILS
15. WORLDS FAIR BENCH
16. PLANTING DETAILS
17. PLANTING DETAILS - SPECIAL CONDITIONS
18. ACCESSIBLE DRINKING FOUNTAIN
19. WATER DETAILS NO. 2
20. DRAINAGE DETAILS NO. 1
21. DRAINAGE DETAILS NO. 2
22. CONSTRUCTION SIGN

M-144-194

M144-194

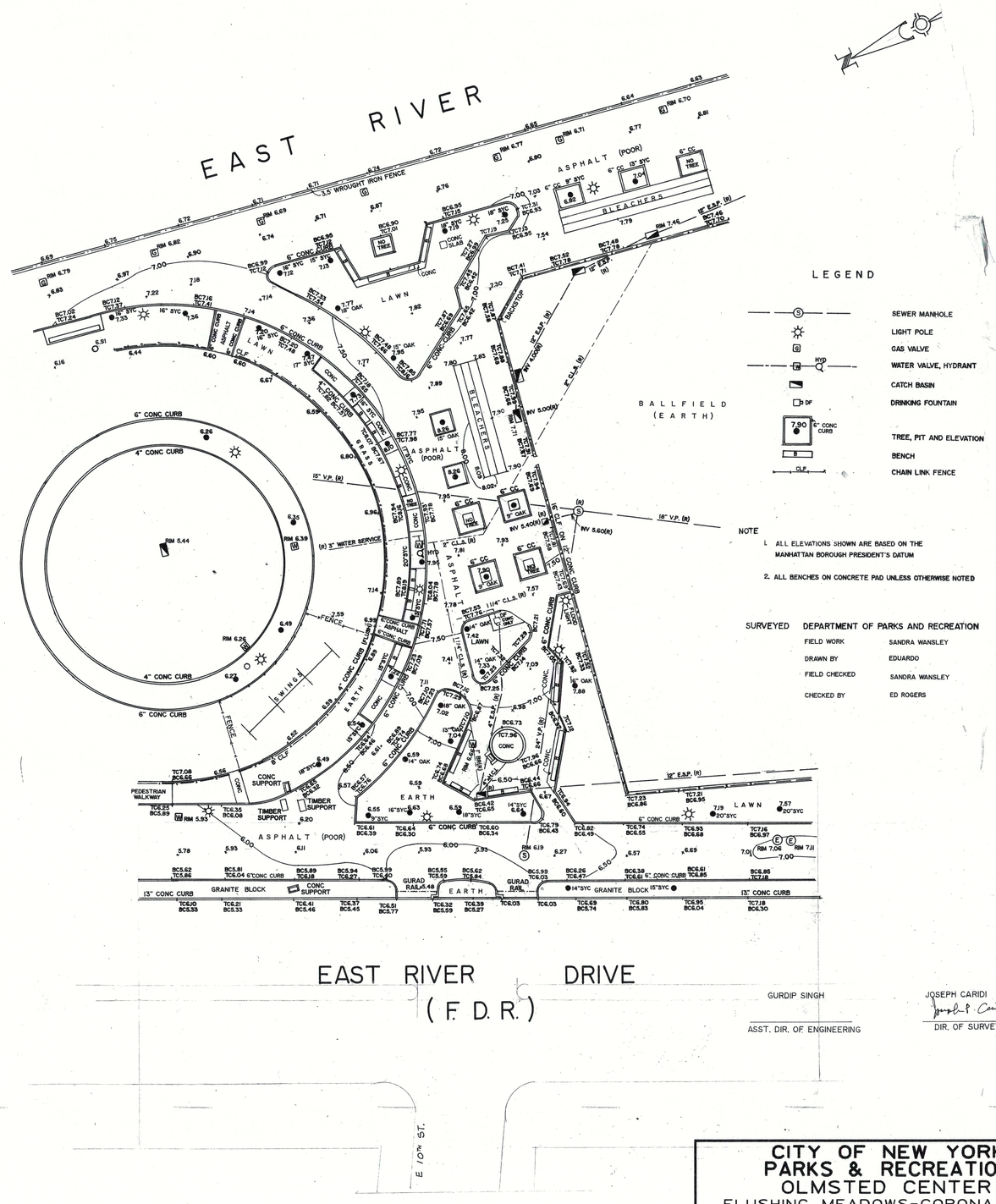

LEGEND

- SEWER MANHOLE
- LIGHT POLE
- GAS VALVE
- WATER VALVE, HYDRANT
- CATCH BASIN
- DRINKING FOUNTAIN
- TREE, PIT AND ELEVATION
- BENCH
- CHAIN LINK FENCE

NOTE

1. ALL ELEVATIONS SHOWN ARE BASED ON THE MANHATTAN BOROUGH PRESIDENT'S DATUM
2. ALL BENCHES ON CONCRETE PAD UNLESS OTHERWISE NOTED

SURVEYED DEPARTMENT OF PARKS AND RECREATION

FIELD WORK	SANDRA WANSLEY
DRAWN BY	EDUARDO
FIELD CHECKED	SANDRA WANSLEY
CHECKED BY	ED ROGERS

NOTE:

THIS IS TO CERTIFY THAT THERE ARE NO NATURAL STREAMS OR WATERCOURSES IN THE PROPERTY AS SHOWN IN THIS SURVEY.

0 5 10 20 50 100

GURDIP SINGH
ASST. DIR. OF ENGINEERING

JOSEPH CARIDI
DIR. OF SURVEY

MAP FILE No. M-T-144-2250

CITY OF NEW YORK
PARKS & RECREATION
OLMSTED CENTER
FLUSHING MEADOWS-CORONA PARK
FLUSHING, NEW YORK 11368

PROJECT TITLE THE CONSTRUCTION OF A COMFORT STATION IN EAST RIVER PARK LOCATED OPPOSITE 10TH STREET BETWEEN THE F.D.R. DRIVE AND THE EAST RIVER, BOROUGH OF MANHATTAN

DRAWING TITLE TOPOGRAPHICAL SURVEY OF A PORTION OF EAST RIVER PARK, F. D. R. DRIVE AND EAST 10th STREET, BOROUGH OF MANHATTAN

DRAWN BY EDUARDO	CHECKED BY ED ROGERS
APPROVED BY	APPROVED BY
SCALE 1" = 20'	CONTRACT NO. M144-194
DATE 3 - 30 - 94	SHEET NO. 2 OF 22 SHEETS

EQUITABLE BLUEPRINT & PHOTOPRINT CO., INC. NY.111

NOTES

1. CONTRACT LIMIT LINE FOLLOWS LINE OF CONSTRUCTION FENCE UNLESS OTHERWISE NOTED.
2. ABANDONED UTILITY LINES TO BE REMOVED AS REQUIRED TO ACCOMMODATE NEW WORK.
3. THE CONTRACTOR IS TO USE EXTREME CARE DURING CONSTRUCTION TO AVOID DISTURBING OR DAMAGING ADJACENT FACILITIES AND PAVEMENTS. ANY DAMAGE RESULTING FROM THIS CONSTRUCTION WILL BE THE CONTRACTORS RESPONSIBILITY AND SHALL BE RESTORED AT THE CONTRACTORS EXPENSE TO THE SATISFACTION OF THE PARKS DEPARTMENT.
4. THE CONTRACTOR SHALL INSPECT THE SITE, VERIFY ALL DIMENSIONS AND EXISTING CONDITIONS PRIOR TO THE START OF WORK. ANY DISCREPANCIES SHALL BE BROUGHT TO THE ATTENTION OF THE PARKS DEPARTMENT.
5. SPECIAL CARE SHALL BE TAKEN TO PRESERVE ALL EXISTING TREES AND THEIR ROOT SYSTEMS DURING CONSTRUCTION. NO HEAVY MACHINES, EQUIPMENT, OR STOCKPILING OF MATERIAL IS PERMITTED WITHIN 15' RADIUS OF THE TRUNKS OR WITHIN DRIP LINE OF ALL EXISTING TREES.
6. ALL ABANDONED PIPES GREATER THAN 4" DIAMETER TO BE PLUGGED AT BOTH ENDS. TO BE PAID FOR UNDER THE ITEM 'UNCLASSIFIED EXCAVATION.'
7. CONTRACTOR IS TO CALL THE 'ONE CALL CENTER' AT 1-800-272-4480 2 TO 10 DAYS PRIOR TO THE START OF EXCAVATION TO INFORM ALL UTILITY COMPANIES OF WORK TO BE PERFORMED.
8. CONTRACTOR SHALL TAKE APPROPRIATE CARE TO SAFE-GUARD ALL UTILITIES DURING CONSTRUCTION OPERATIONS
9. ALL TREES WITH TREE GUARDS SHALL RECEIVE COMPENSATORY PRUNING AND FERTILIZATION.
10. CONSTRUCTION SITE IS TO BE PROTECTED WITH AN 8'-0" CONSTRUCTION FENCE AS SHOWN ON PLAN. EXISTING CHAIN LINK FENCE 8'-0" OR HIGHER MAY SERVE AS A CONSTRUCTION FENCE. CONTRACTOR IS RESPONSIBLE TO KEEP CONSTRUCTION SITE SECURE FOR ENTIRE CONTRACT DURATION.
11. ALL CONCRETE SLABS UNDER BENCHES TO BE REMOVED UNDER THE ITEM 'UNCLASSIFIED EXCAVATION.'
12. QUANTITIES OF PAVEMENT AND CURB REMOVALS IN REMOVALS SCHEDULE ARE APPROXIMATE.

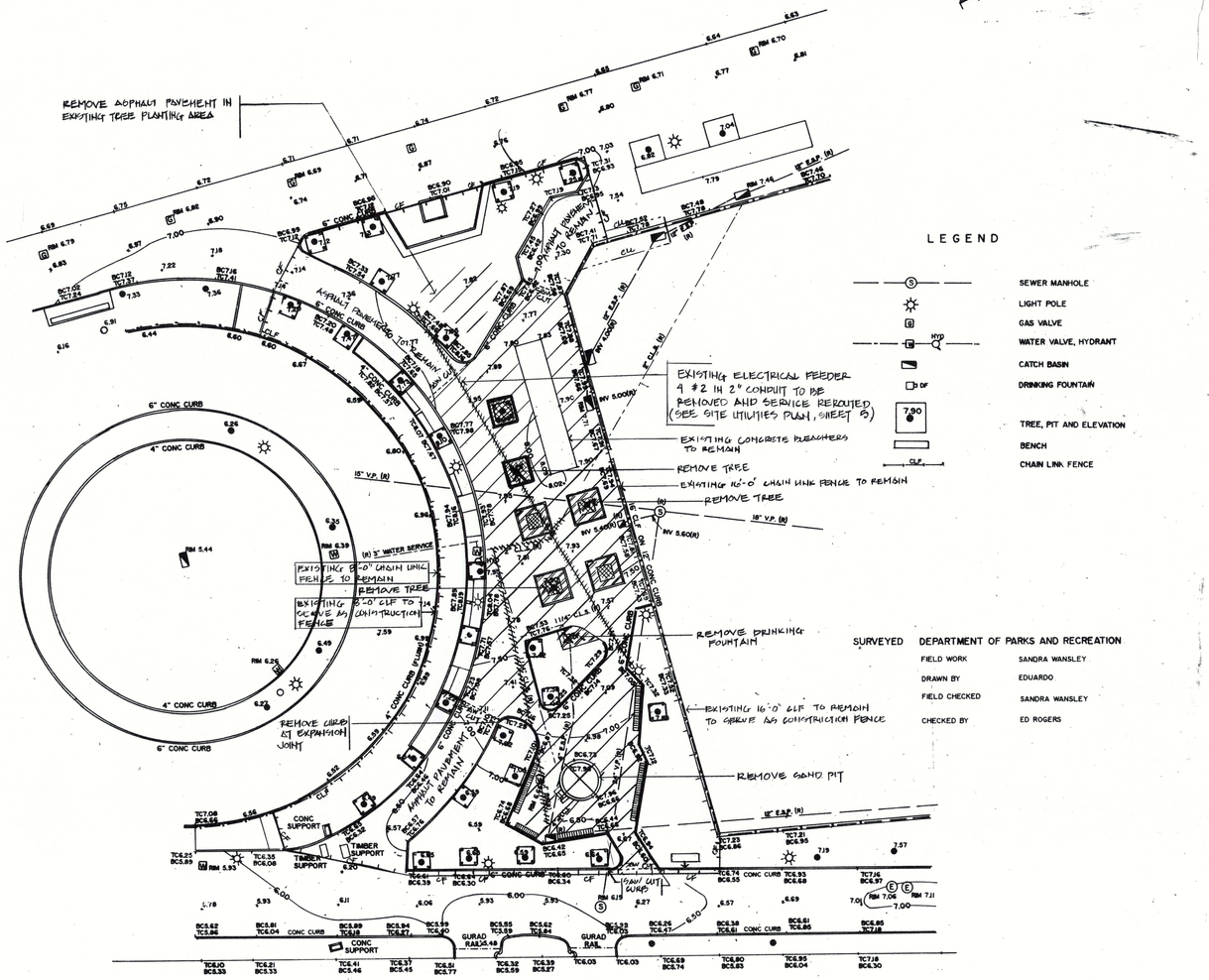

LEGEND

- SEWER MANHOLE
- LIGHT POLE
- GAS VALVE
- WATER VALVE, HYDRANT
- CATCH BASIN
- DRINKING FOUNTAIN
- TREE, PIT AND ELEVATION
- BENCH
- CHAIN LINK FENCE

SURVEYED DEPARTMENT OF PARKS AND RECREATION

FIELD WORK	SANDRA WANSLEY
DRAWN BY	EDUARDO
FIELD CHECKED	SANDRA WANSLEY
CHECKED BY	ED ROGERS

REMOVALS SCHEDULE

SYMBOL	ITEM	TOTAL QTY	QTY REMOVED FROM SITE	QTY SALVAGED FOR M & O	QTY SALVAGED FOR REUSE	REMARKS
	ASPHALT PAVEMENT	740 SY	740 SY	———	———	PAID UNDER ITEM "UNCLASSIFIED EXCAVATION"
	CONCRETE PAVEMENT	65 SY	65 SY	———	———	PAID UNDER ITEM "UNCLASSIFIED EXCAVATION"
	CONCRETE CURB (6" WIDE)	350 LF	350 LF	———	———	PAID UNDER ITEM "UNCLASSIFIED EXCAVATION"
	GRANITE BLOCK	17 SY	17 SY	———	———	
SEE PLAN	SAND PIT	1 EA	1 EA	———	———	PAID UNDER ITEM "REMOVE SAND PIT"
SEE PLAN	DRINKING FOUNTAIN	1 EA	1 EA	SAVE PLUMBING FIXTURES	———	
	WOOD & STEEL BENCH	75 LF	75 LF	———	———	REMOVE CONCRETE SLABS (SEE NOTE 11)
SEE PLAN	TREE	3 EA	3 EA	———	———	
	OVERHEAD UTILITY LINE	LF	———	———	———	(SEE NOTE 2)

REMOVALS LEGEND

- PROPERTY LINE
- CLL — CONTRACT LIMIT LINE (SEE NOTE 4)
- CF — CONSTRUCTION FENCE
- EXISTING TREE WITH TEMPORARY WOODEN TREE GUARD — 27/17
- SCUT — SAW CUT LINE
- CONSTRUCTION SIGN
- EXISTING LIGHT POLE TO REMAIN

0 5 10 20 50 100

MAP FILE No.

CITY OF NEW YORK
PARKS & RECREATION
OLMSTED CENTER
FLUSHING MEADOWS-CORONA PARK
FLUSHING, NEW YORK 11368

PROJECT TITLE THE CONSTRUCTION OF A COMFORT STATION IN EAST RIVER PARK LOCATED OPPOSITE 10TH STREET BETWEEN FDR DRIVE AND THE EAST RIVER, BOROUGH OF MANHATTAN

DRAWING TITLE REMOVALS PLAN

DRAWN BY K.H.	CHECKED BY M.K.
APPROVED BY C. ROSENTHAL	APPROVED BY
SCALE 1" = 20'	CONTRACT NO. M149-194
DATE 3 - 30 - 94	SHEET NO. 3 OF 22 SHEETS

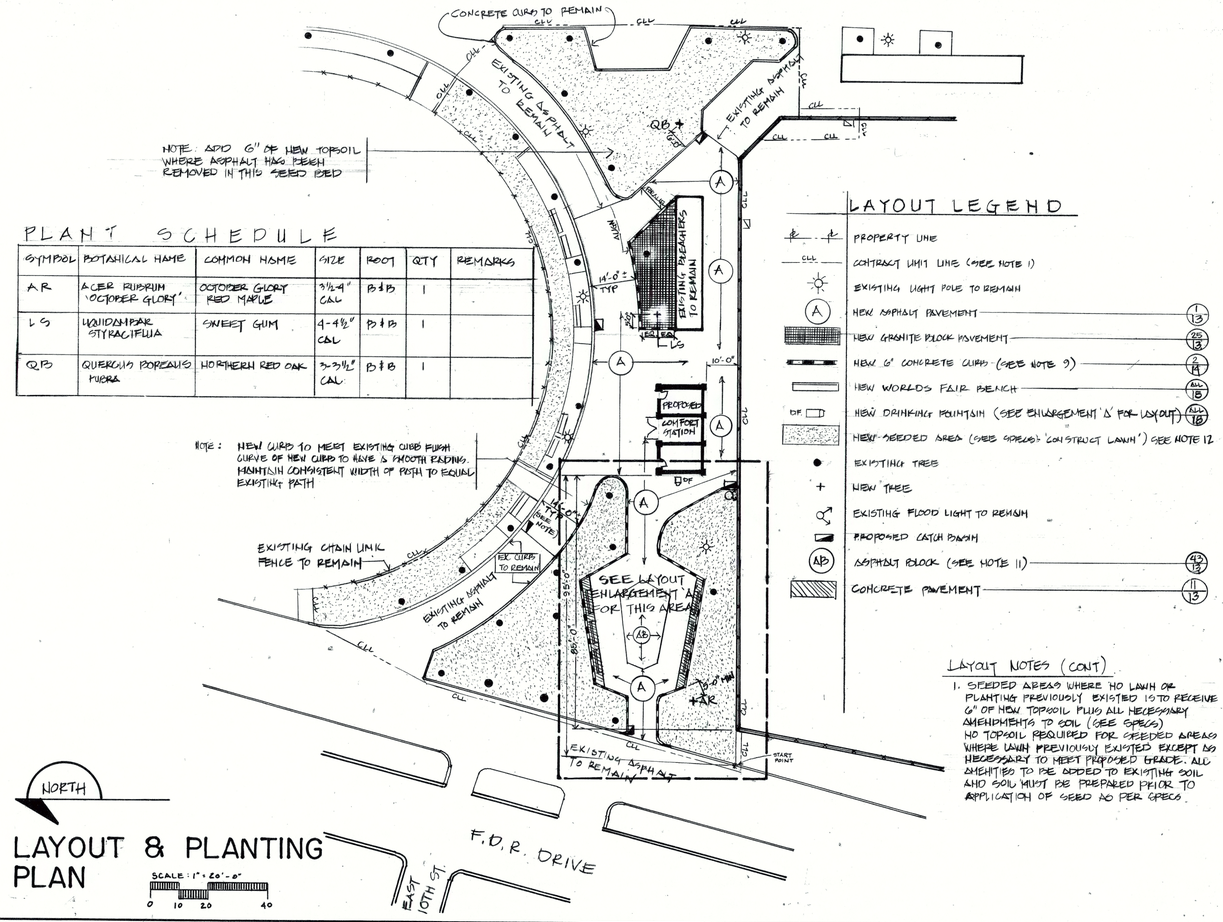

PLANT SCHEDULE

SYMBOL	BOTANICAL NAME	COMMON NAME	SIZE	ROOT	QTY	REMARKS
AR	ACER RUBRUM 'OCTOBER GLORY'	OCTOBER GLORY RED MAPLE	3½-4" CAL	B&B	1	
LS	LIQUIDAMBAR STYRACIFLUA	SWEET GUM	4-4½" CAL	B&B	1	
QRB	QUERCUS BOREALIS MUBRA	NORTHERN RED OAK	3-3½" CAL	B&B	1	

LAYOUT LEGEND

- PROPERTY LINE
- CONTRACT LIMIT LINE (SEE NOTE 1)
- EXISTING LIGHT POLE TO REMAIN
- (A) NEW ASPHALT PAVEMENT — (1/13)
- NEW GRANITE BLOCK PAVEMENT — (2G/13)
- NEW 6" CONCRETE CURB (SEE NOTE 9) — (2/A)
- NEW WORLDS FAIR BENCH — (ALL/15)
- NEW DRINKING FOUNTAIN (SEE ENLARGEMENT 'A' FOR LAYOUT) — (2/A)
- NEW SEEDED AREA (SEE SPECS: 'CONSTRUCT LAWN') SEE NOTE 12
- EXISTING TREE
- NEW TREE
- EXISTING FLOOD LIGHT TO REMAIN
- PROPOSED CATCH BASIN
- (AB) ASPHALT BLOCK (SEE NOTE 11) — (4G/13)
- CONCRETE PAVEMENT — (11/13)

LAYOUT NOTES (CONT)

1. SEEDED AREAS WHERE NO LAWN OR PLANTING PREVIOUSLY EXISTED IS TO RECEIVE 6" OF NEW TOPSOIL PLUS ALL NECESSARY AMENDMENTS TO SOIL (SEE SPECS) NO TOPSOIL REQUIRED FOR SEEDED AREAS WHERE LAWN PREVIOUSLY EXISTED EXCEPT AS NECESSARY TO MEET PROPOSED GRADE. ALL AMENDED TO BE ADDED TO EXISTING SOIL AND SOIL MUST BE PREPARED PRIOR TO APPLICATION OF SEED AS PER SPECS.

LAYOUT & PLANTING PLAN

SCALE: 1" = 20'-0"

0 10 20 40

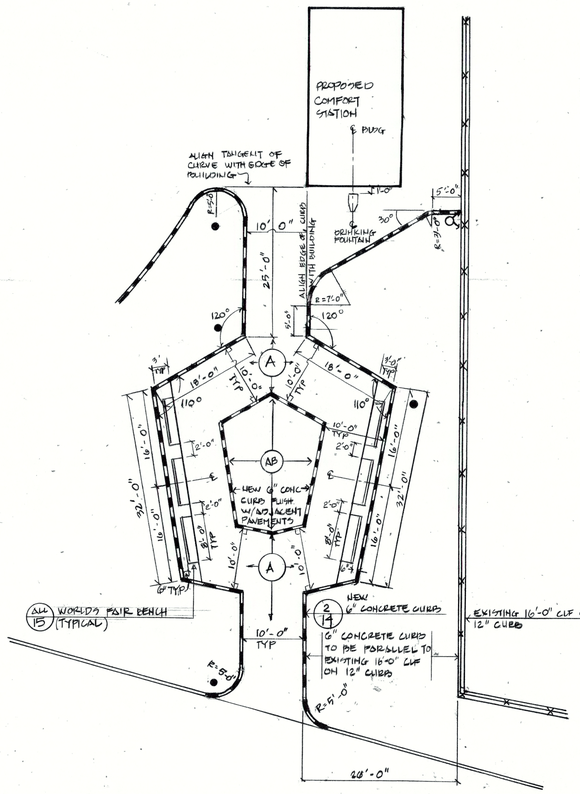

LAYOUT ENLARGEMENT 'A'

SCALE: 1" = 10'-0"

0 5 10 20

LAYOUT NOTES

1. CONTRACT LIMIT LINE FOLLOWS LINE OF CONSTRUCTION FENCE UNLESS OTHERWISE NOTED. (SEE REMOVALS PLAN, SHEET 3)
2. THE CONTRACTOR IS TO USE EXTREME CARE DURING CONSTRUCTION TO AVOID DISTURBING OR DAMAGING ADJACENT FACILITIES AND PAVEMENTS. ANY DAMAGE RESULTING FROM THIS CONSTRUCTION WILL BE THE CONTRACTORS RESPONSIBILITY AND SHALL BE RESTORED AT THE CONTRACTORS EXPENSE TO THE SATISFACTION OF THE PARKS DEPARTMENT.
3. THE CONTRACTOR SHALL INSPECT THE SITE, VERIFY ALL DIMENSIONS AND EXISTING CONDITIONS PRIOR TO THE START OF WORK. ANY DISCREPENCIES SHALL BE BROUGHT TO THE ATTENTION OF THE PARKS DEPARTMENT.
4. SPECIAL CARE SHALL BE TAKEN TO PRESERVE ALL EXISTING TREES AND THEIR ROOT SYSTEMS DURING CONSTRUCTION. NO HEAVY MACHINES, EQUIPMENT OR STOCKPILING OF MATERIAL IS PERMITTED WITHIN 15' RADIUS OF THE TRUNKS OR WITHIN THE DRIPLINE OF ALL EXISTING TREES.
5. CONTRACTOR SHALL TAKE APPROPRIATE CARE TO SAFEGUARD ALL UTILITIES DURING CONSTRUCTION OPERATIONS.
6. ALL TREES WITH TREE GUARDS SHALL RECEIVE COMPENSATORY PRUNING AND FERTILIZATION. (SEE REMOVALS PLAN, SHEET 3)
7. CONTRACTOR IS NOT TO DIMENSION DIRECTLY OFF PLAN ANY DISCREPENCIES IN LAYOUT DIMENSIONING SHOULD BE BROUGHT TO THE ATTENTION OF THE PARKS DEPARTMENT IMMEDIATELY.
8. PRIOR TO EXCAVATION FOR SITTING AREA, CONTRACTOR IS TO VERIFY EXISTING DIMENSIONS AND CONFIRM THAT NEW LAYOUT DOES NOT INTERFERE WITH EXISTING TREES. IF DISCREPANCIES OCCUR AND EXISTING TREES INTERFERE WITH PROPOSED LAYOUT, ADJUSTMENTS MAY BE MADE ONLY WITH THE APPROVAL OF THE PARKS DEPARTMENT DESIGN DIVISION.
9. NEW CONCRETE CURBS TO BRIDGE EXISTING TREE ROOTS AS PER DETAIL 2/A ON SHEET 17 AS REQUIRED TO AVOID DAMAGE TO TREE ROOTS.
10. ALL RADII DIMENSIONS ARE TO OUTSIDE EDGE OF CURB UNLESS OTHERWISE NOTED.
11. ASPHALT BLOCK SHALL BE WINDSOR EMBOSSED AND BLENDING BROWN/BROWN AS MANUFACTURED BY HASTINGS PAVERS OR APPROVED EQUAL - SEE LAYOUT ENLARGEMENT 'B'. CONTRACTOR TO SUBMIT SHOP DRAWINGS OF LAYOUT!!

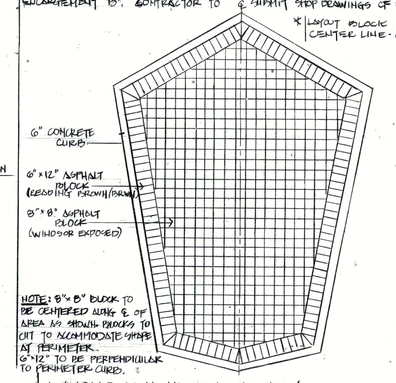

NOTE: 8⅜" BLOCK TO BE CENTERED ALONG ℄ OF AREA AS SHOWN. BLOCKS TO CUT TO ACCOMMODATE SHAPE AT PERIMETER. 6"x12" TO BE PERPENDICULAR TO PERIMETER CURB.

LAYOUT ENLARGEMENT 'B'

SCALE: ¼" = 1'-0"

0 2 4 8

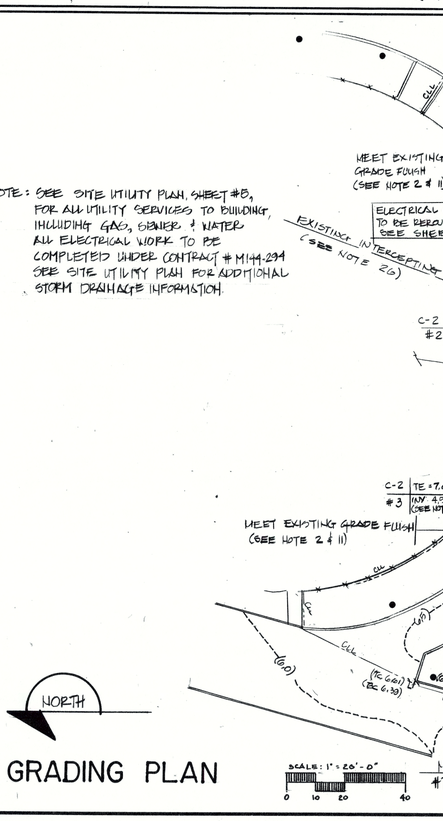

GRADING PLAN

SCALE: 1" = 20'-0"

0 10 20 40

GRADING LEGEND

- PROPERTY LINE
- CONTRACT LIMIT LINE
- (720) EXISTING CONTOUR
- 720 PROPOSED CONTOUR
- + (7.8) EXISTING SPOT GRADE
- + T.C. 7.16 / B.C. 7.00 PROPOSED SPOT GRADE (TC = TOP OF CURB; BC = BOTTOM OF CURB; HP = HIGH POINT)
- EXISTING TREE TO REMAIN
- PROPOSED TREE (SEE LAYOUT & PLANTING PLAN ABOVE)
- EXISTING PARK SECURITY LIGHT TO REMAIN
- EXISTING RECREATION LIGHT TO REMAIN
- EXISTING CATCH BASIN (SEE NOTE 4)
- PROPOSED CATCH BASIN (SEE NOTE 18 & 27)
- EXISTING STORM DRAINAGE PIPING (SEE NOTE 4)
- 12" VTP PROPOSED STORM DRAINAGE PIPING (SEE NOTE 18 & 27)
- EXISTING WATER PIPING
- CI TYPE K PROPOSED WATER PIPING (SEE NOTE 17 & 21)
- PROPOSED MANHOLE (SEE NOTE 18, 21, 27)
- (DF) PROPOSED DRINKING FOUNTAIN (SEE NOTE 28) — (ALL/12)
- (SEE NOTE 21) PROPOSED DRY WELL — (2B/13)
- E EXISTING LIVE ELECTRICAL FEEDER & #2 IN 2" CONDUIT (SEE SITE UTILITY PLAN, SHEET #5)
- EXISTING FIRE HYDRANT

GRADING NOTES

1. IT IS THE RESPONSIBILITY OF THE CONTRACTOR TO VERIFY ALL SITE CONDITIONS BOTH ABOVE AND BELOW THE SURFACE OF THE GROUND PRIOR TO COMMENCING HIS WORK. ANY DISCREPANCIES BETWEEN INFORMATION SHOWN ON THE DRAWINGS AND ACTUAL FIELD CONDITIONS SHOULD BE BROUGHT TO THE ATTENTION OF THE DEPT OF PARKS.
2. GRADE THE GROUND TO AVOID GROOVES WHERE NEW GRADING MEETS EXISTING GROUND. MAINTAIN CONSTANT GRADIENT BETWEEN FINISHED GRADE ELEVATIONS GIVEN.
3. USE EXTREME CARE TO PROTECT EXISTING TREES. EXCAVATE BY HAND ONLY WITHIN THE DRIPLINE OF EXISTING TREES. UTILITY TRENCHES ARE TO BE LOCATED OUTSIDE THE DRIP LINE OF EXISTING TREES WHEREVER POSSIBLE. NO EQUIPMENT OR MATERIALS SHALL BE STORED WITHIN THE DRIP LINE OF EXISTING TREES
4. THE CONTRACTOR SHALL REMOVE ALL DEBRIS & SILT FROM THE EXISTING DRAINAGE STRUCTURES AND PIPING FOR POSITIVE DRAINAGE FLOW. (SEE SHEET #5)
5. MINIMUM COVER FOR PIPE TO BE 1'-0" COMPUTED FROM FINISHED GRADE.
6. ALL WATER PIPE TO BE PITCHED ½ PERCENT MINIMUM, AS INDICATED BY ARROWS, WITHOUT POCKETS, TO DRAIN.
7. THE LOCATION OF DRAINAGE BASINS TO BE AT THE LOW POINT OF THEIR RESPECTIVE AREAS AS DETERMINED IN THE FIELD. LOCATIONS ON PLAN ARE DIAGRAMMATIC.
8. LOCATION OF ALL UTILITIES SHOWN ARE APPROXIMATE. WHERE SEWER OR WATER LINES CROSS EXISTING UTILITIES, THE CONTRACTOR SHALL MAKE PRELIMINARY INVESTIGATION INCLUDING AS NECESSARY EXCAVATION TO DETERMINE IF WORK CAN BE DONE AS SHOWN ON PLANS. CHANGES MAY BE MADE AS REQUIRED BY FIELD CONDITIONS AND AS DIRECTED BY FIELD ENGINEER.
9. CONTRACTOR IS TO USE CARE DURING CONSTRUCTION TO AVOID DISTURBING OR DAMAGING EXISTING PAVEMENTS, CURBS, STRUCTURES, FENCES, ETC., TO REMAIN. ANY DAMAGE RESULTING FROM THIS CONSTRUCTION WILL BE REPLACED OR RESTORED AT THE CONTRACTORS OWN EXPENSE TO THE SATISFACTION OF THE SITE ENGINEER.
10. SEE LAYOUT PLAN ABOVE FOR LOCATION OF DRAINAGE STRUCTURES
11. NEW CURBS, PAVEMENTS, ETC., SHALL MEET EXISTING STRUCTURES & PAVEMENTS SMOOTHLY & EVENLY.
12. WHEN BACKFILLING AROUND STRUCTURES SUCH AS DRY WELLS, CATCH BASINS, ETC. USE PROPER FILL MATERIAL WHICH IS FREE FROM ORGANIC MATTER, FROZEN MATERIAL, DEBRIS, BOULDERS & OTHER UNDESIRABLE MATERIAL. COMPACT BACK-FILL CAREFULLY IN 6" LAYERS.
13. PRIOR TO ANY GRADING OPERATIONS, THE CONTRACTOR IS REQUIRED TO NOTIFY THE ONE CALL CENTER AT 1-800-272-4480 TO ASSURE UTILITY LOCATIONS ARE PROPERLY MARKED.
14. THE CONTRACTOR SHALL ENSURE THAT POSITIVE DRAINAGE IS ACHIEVED THROUGHOUT THE ENTIRE DRAINAGE SYSTEM. SHOULD THE CONTRACTOR FAIL TO ACHIEVE POSITIVE DRAINAGE, CORRECTIVE MEASURES SHALL BE TAKEN AT THE CONTRACTORS EXPENSE AS DIRECTED BY THE ENGINEER.
15. FOR MAXIMUM PAYMENT LINES FOR EXCAVATION, SEE DETAIL 27 ON SHEET 21 OF THIS CONTRACT DOCUMENT SET.
16. REMOVE EXISTING PIPING AS NECESSARY TO INSTALL NEW PIPE.
17. FOR WATER DETAILS, SEE SHEET # 19
18. FOR DRAINAGE DETAILS, SEE SHEETS 20 & 21.
19. CONTRACTOR IS TO ENSURE POSITIVE DRAINAGE FLOW AWAY FROM BUILDING.
20. ALL EXISTING PIPING TO BE ABANDONED IS TO BE PLUGGED AT BOTH ENDS. SEE REMOVALS PLAN, SHEET 3
21. FOR UTILITY SERVICES TO BUILDING, AND NEW WATER SUPPLY, SEE SHEET #5
22. 6" CONCRETE CURBS FOR GRANITE BLOCK TREE PITS TO BE FLUSH WITH ADJACENT ASPHALT PAVEMENT.
23. 6" CONCRETE CURBS AROUND TREE LAWN AREAS ARE TO HAVE A 2" REVEAL ON PAVEMENT SIDE (TYPICAL)
24. GRADE LAWN AREAS AS ADJACENT TO SITTING AREAS TO AVOID FILLING OR CUTTING AROUND EXISTING TREES. GRADE LAWN AREAS TO HAVE POSITIVE DRAINAGE TO ADJACENT PAVEMENTS. AVOID LOW POINTS IN LAWN AREAS.
25. ADJUST TOPS OF UTILITY STRUCTURES TO GRADE AS REQUIRED
26. CONTRACTOR SHALL TAKE EVERY PRECAUTION TO AVOID EXISTING INTERCEPTING SEWER DURING CONSTRUCTION. WHERE SEWER INTERFERES WITH PROPOSED WORK, ADJUSTMENTS MAY BE MADE WITH THE APPROVAL OF THE PARKS DEPARTMENT (REFER TO NOTE 8)
27. FOR DRAINAGE STRUCTURE AND PIPING INFORMATION, SEE SITE UTILITIES PLAN, SHEET #5

SITE LOCATION PLAN

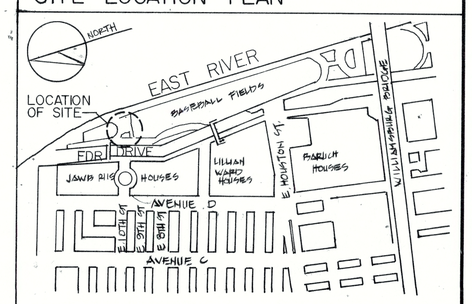

City of New York
Parks & Recreation
Olmsted Center
Flushing Meadows Corona Park
Flushing, New York 11368

PROJECT TITLE	THE CONSTRUCTION OF A COMFORT STATION IN EAST RIVER PARK LOCATED OPPOSITE 10TH STREET BETWEEN FDR DRIVE AND THE EAST RIVER, BOROUGH OF MANHATTAN
DRAWING TITLE	LAYOUT & PLANTING PLAN GRADING PLAN
DESIGNED BY	S.R./M.K.
DRAWN BY	K.J. HORGAN
CHECKED BY	M.K.
APPROVED BY DIRECTOR	DAVID CARLSON
APPROVED BY CHIEF OF DESIGN	ERNST GEIBEL SPACH
SCALE	AS SHOWN
CONTRACT NO.	M144 - 194
DATE	APRIL 1994
SHEET NO.	4 OF 22 SHEETS

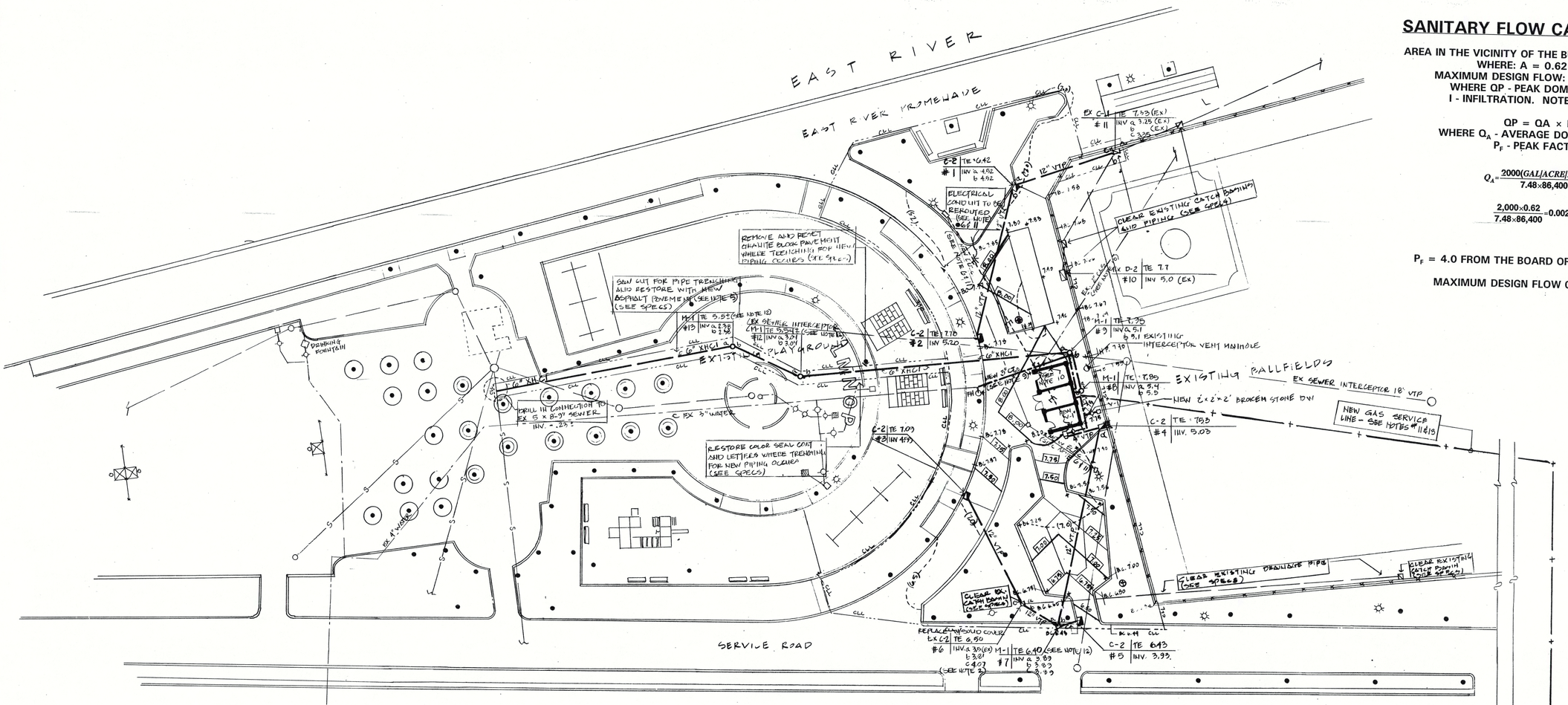

SANITARY FLOW CALCULATIONS

AREA IN THE VICINITY OF THE BUILDING, IN (A) ACRES
WHERE: A = 0.62 ACRES.
MAXIMUM DESIGN FLOW: Q(cfs) = QP + I
WHERE QP - PEAK DOMESTIC FLOW;
I - INFILTRATION. NOTE THAT I = 0.

$QP = QA \times PF$

WHERE Q_A - AVERAGE DOMESTIC FLOW;
P_F - PEAK FACTOR.

$$Q_A = \frac{2000(GAL/ACRE/DAY)}{7.48 \times 86{,}400} =$$

$$\frac{2{,}000 \times 0.62}{7.48 \times 86{,}400} = 0.002 C.F.S$$

P_F = 4.0 FROM THE BOARD OF ESTIMATE CURVE

MAXIMUM DESIGN FLOW Q = 0.01 C.F.S

LEGEND

- PROPERTY LINE
- CONTRACT LIMIT LINE
- (7.0) EXISTING CONTOUR (SEE NOTE 1)
- 7.0 PROPOSED CONTOUR (SEE NOTE 1)
- +(7.60) EXISTING SPOT GRADE (SEE NOTE 1)
- + 7.60 PROPOSED SPOT GRADE (SEE NOTE 1)
- EXISTING TREE TO REMAIN
- NEW TREE
- EXISTING PARK SECURITY LIGHT TO REMAIN
- EXISTING RECREATIONAL LIGHT POLE TO REMAIN
- EXISTING CATCH BASIN (SEE NOTE 2)
- NEW CATCH BASIN (SEE NOTE 1)
- EXISTING MANHOLE
- NEW MANHOLE
- EXISTING STORM DRAINAGE PIPING (SEE NOTE 2)
- 12" VTP NEW STORM DRAINAGE PIPING
- DF NEW DRINKING FOUNTAIN (SEE LAYOUT PLAN SHEET 4 FOR LOCATION)
- EXISTING DRY WELL
- DW NEW DRY WELL (42/20)
- EXISTING WATER PIPING
- CT TYPE K NEW WATER PIPING
- NEW GAS SERVICE (42/28)
- 6" XHCI NEW 6" EXTRA HEAVY CAST IRON SOIL PIPE
- -E- EXISTING LIVE ELECTRICAL FEEDER 4 #2 IN 2" CONDUIT TO BE REMOVED (SEE NOTE 11)
- FH EXISTING FIRE HYDRANT

NOTES

1. SEE GRADING PLAN ON SHEET #4 FOR ADDITIONAL GRADING AND DRAINAGE INFORMATION AROUND PROPOSED BUILDING.
2. CLEAR EXISTING STORM FACILITIES AS SHOWN ON PLAN (SEE SPECS)
3. EXISTING UTILITY INFORMATION MAY NOT BE COMPLETE OR ACCURATE CONTRACTOR SHALL VERIFY LOCATION OF ALL EXISTING UTILITIES THAT AFFECT NEW WORK OR MAY INTERFERE WITH NEW WORK PRIOR TO ANY EXCAVATION
   LOCATION OF ALL UTILITIES SHOWN ARE APPROXIMATE. WHERE SEWER OR WATER LINES CROSS EXISTING UTILITIES, THE CONTRACTOR SHALL MAKE PRELIMINARY INVESTIGATION INCLUDING ALL NECESSARY EXCAVATION TO DETERMINE IF WORK CAN BE DONE AS SHOWN OR PLANS CHANGES MAY BE MADE AS REQUIRED BY FIELD CONDITIONS AND AS DIRECTED BY FIELD ENGINEER.
4. THE LOCATION OF DRAINAGE PIPING TO BE AT THE LOW POINT OF THEIR RESPECTIVE AREAS AS DETERMINED IN THE FIELD. LOCATIONS ON PLAN ARE DIAGRAMATIC.
5. REFER TO DETAIL 27 ON SHEET # 21 FOR MAXIMUM PAYMENT LINES FOR PIPE TRENCHING EXCAVATION.
6. CONTRACTOR SHALL COORDINATE INSTALLATION OF NEW WATER LINE WITH ELECTRICAL CONTRACTOR WHERE NEW ELECTRICAL CONDUIT CROSSES NEW WATER PIPING
7. PIPE UNDER EXISTING CURBS TO REMAIN TO AVOID DAMAGE TO CURBS DURING EXCAVATION. DAMAGED CURBS TO BE REPAIRED AT CONTRACTORS EXPENSE TO THE SATISFACTION OF THE ENGINEER
8. REFER TO ADDITIONAL GRADING AND UTILITY NOTES ON GRADING PLAN, SHEET #4
9. CONNECT NEW 3" CI TO EXISTING 3" SUPPLY WITH DIALECTRIC FITTING
10. CONNECT EXISTING 2" CLS WATER LINE TO NEW 3" CI WITH DIALECTRIC FITTING. EXISTING 2" CLS AND 1¼" CLS BELOW POINT OF CONNECTION TO BE ABANDONED SEE REMOVAL PLAN SHEET # 3.
11. CONTRACTOR SHALL DISCONNECT ELECTRICAL POWER BEFORE ANY EXCAVATION. CONTRACTOR SHALL COORDINATE ELECTRICAL OUTAGE WITH D.O.T. DIVISION OF STREET LIGHTING-MANHATTAN BOROUGH ENGINEER PHONE # (718) 786-4672, & CON-ED FOR OTHER UTILITIES.
    GENERAL CONTRACTOR SHALL ALSO COORDINATE HIS WORK WITH THE ELECTRICAL CONTRACTOR (CONTRACT # 1144-294) WHO SHALL BE RESPONSIBLE TO REROUTE THE 4 #2 IN 2" CONDUIT AS SHOWN ON DRAWING.
    CONTRACTOR SHALL TAKE EXTREME CARE DURING EXCAVATION SO AS NOT TO DAMAGE THE TWO EXISTING PULL BOXES.
12. ALL DRAINAGE STRUCTURES PROPOSED IN EXISTING PAVEMENT TO REMAIN SHALL MEET FLUSH WITH SURROUNDING PAVEMENT.
13. CONTRACTOR SHALL TAKE EXTREME CARE DURING EXCAVATION SO AS NOT TO DAMAGE EXISTG. UTILITIES - (DRAWINGS FOR ADDITIONAL UTILITIES NOT SHOWN ON THIS DRAWING CAN BE OBTAINED FROM THIS OFFICE) SAWCUT AND PATCH WHERE NECESSARY.

City of New York
Parks & Recreation
Olmsted Center
Flushing Meadows Corona Park
Flushing, New York 11368

PROJECT TITLE THE CONSTRUCTION OF A COMFORT STATION IN EAST RIVER PARK LOCATED OPPOSITE 10TH STREET BETWEEN F.D.R. DRIVE AND THE EAST RIVER, BOROUGH OF MANHATTAN		
DRAWING TITLE SITE UTILITIES PLAN		
DESIGNED BY P.W/B.M.	DRAWN BY K.H/MK.	CHECKED BY PW/B.M.
APPROVED BY DIRECTOR S. ROSENTHAL	APPROVED BY CHIEF OF DESIGN GARY GEIERSBACH	
SCALE 1"=20'-0" (0, 10, 20, 40)	CONTRACT NO. M144-194	
DATE APRIL 1991	SHEET NO. 5 OF 22 SHEETS	

BORING B1

DEPTH FT.	SPOON BLOWS PER 1/2 FT.	HOLLOW STEM AUGER	MATERIAL
GROUND SURFACE			
			BLACKTOP 2.5"
5'	10 22		SAND,
	27 12		GRAVEL,
10'	9 9		RED
	9 10		BRICKS
15'	6 8		Fill (11-65)
	16 8		
20'	1 1		
	1 1		SAND, GRAVEL + STONES
25'	1 1		Fill (11-65)
	1 1		Loose
			SAND
30'	3 3		Fill (11-65)
31'	3 3		

BORING B2

DEPTH FT.	SPOON BLOWS PER 1/2 FT.	HOLLOW STEM AUGER	MATERIAL
GROUND SURFACE			
			BLACKTOP 2.5"
5'	6 6		
	8 16		SAND,
10'	9 16		GRAVEL
	12 16		+
15'	9 4		STONES
	6 4		TRACE
20'	3 4		SILT
	6 6		
25'	2 1		Fill (11-65)
	3 2		
30'	1 2		
31'	2 2		

BORING B3

DEPTH FT.	SPOON BLOWS PER 1/2 FT.	HOLLOW STEM AUGER	MATERIAL
GROUND SURFACE			
			BLACKTOP 2.5"
5'	5 14		TOP SOIL,
	16 32		SAND,
10'	4 16		SILT,
	10 8		GRAVEL +
15'	4 5		RED BRICK
	5 9		Fill (11-65)
20'	4 6		SAND
	6 5		GRAVEL +
25'	2 2		STONES
	2 2		TRACE SILT
30'	2 2		Fill (11-65)
31'	2 2		CLAY, SILT SAND
			Fill (11-65)

BORING B4

DEPTH FT.	SPOON BLOWS PER 1/2 FT.	HOLLOW STEM AUGER	MATERIAL
GROUND SURFACE			
			BLACKTOP 2.5"
5'	6 6		SAND,
	6 11		GRAVEL,
10'	8 4		+
	3 5		STONES
15'	6 6		Fill
	1 6		(11-65)
20'	1 1		Loose
	1 1		SAND
25'	1 2		Fill (11-65)
	2 2		CLAY,
30'	2 3		PEAT,
31'	4 4		SILT,
			BOG,
			Fill (11-65)

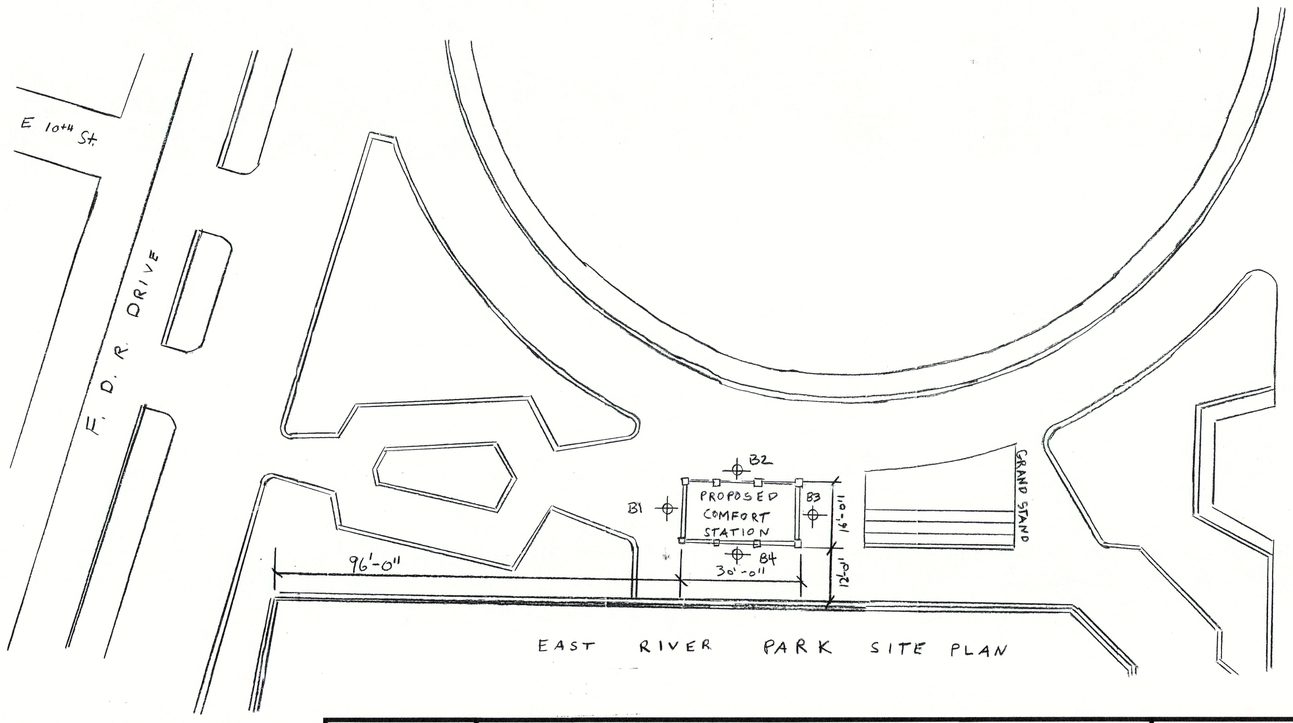

EAST RIVER PARK SITE PLAN

MAJOR DIVISIONS			GROUP SYMBOLS	TYPICAL NAMES
1	2		3	4
COARSE-GRAINED SOILS MORE THAN HALF OF MATERIAL IS LARGER THAN NO. 200 SIEVE SIZE. DIVISIONS ARE MADE ON THE BASIS OF PERCENTAGE OF FINES	GRAVELS MORE THAN HALF OF COARSE FRACTION IS LARGER THAN NO. 4 SIEVE SIZE	CLEAN GRAVELS (LITTLE OR NO FINES)	GW	WELL-GRADED GRAVELS, GRAVEL-SAND MIXTURES, LITTLE OR NO FINES.
			GP	POORLY GRADED GRAVELS OR GRAVEL-SAND MIXTURES, LITTLE OR NO FINES.
		GRAVELS WITH FINES (APPRECIABLE AMOUNT OF FINES)	GM	SILTY GRAVELS, GRAVEL-SAND-SILT MIXTURE.
			GC	CLAYEY GRAVELS, GRAVEL SAND-CLAY MIXTURES.
	SANDS MORE THAN HALF OF COARSE FRACTION IS SMALLER THAN NO. 4 SIEVE SIZE	CLEAN SANDS (LITTLE OR NO FINES)	SW	WELL-GRADED SANDS, GRAVELLY SANDS, LITTLE OR NO FINES.
			SP	POORLY GRADED SANDS OR GRAVELLY SANDS, LITTLE OR NO FINES.
		SANDS WITH FINES (APPRECIABLE AMOUNT OF FINES)	SM	SILTY SANDS, SAND-SILT MIXTURES.
			SC	CLAYEY SANDS, SAND-CLAY MIXTURES.
FINE-GRAINED SOILS MORE THAN HALF OF MATERIAL IS SMALLER THAN NO. 200 SIEVE SIZE THE NO. 200 SIEVE SIZE IS ABOUT THE SMALLEST PARTICLE VISIBLE TO THE NAKED EYE	SILTS & CLAYS LIQUID LIMIT IS LESS THAN 50		ML	INORGANIC SILTS AND VERY FINE SANDS, ROCK FLOUR, SILTY OR CLAYEY FINE SANDS OR CLAYEY SILTS WITH SLIGHT PLASTICITY.
			CL	INORGANIC CLAYS OF LOW TO MEDIUM PLASTICITY GRAVELLY CLAYS, SANDY CLAYS, SILTY CLAYS, LEAN CLAYS.
			OL	ORGANIC SILTS & ORGANIC SILTY CLAYS OF LOW PLASTICITY.
	SILTS & CLAYS LIQUID LIMIT IS GREATER THAN 50		MH	INORGANIC SILTS, MICACEOUS OR DISTOMACEOUS FINE SANDY OR SILTY SOILS, ELASTIC SILTS.
			CH	INORGANIC CLAYS OF HIGH PLASTICITY, FAT CLAYS.
			OH	ORGANIC CLAYS OF MEDIUM TO HIGH PLASTICITY, ORGANIC SILTS.
HIGHLY ORGANIC SOILS			Pt	PEAT AND OTHER HIGHLY ORGANIC SOILS.

ALLOWABLE SOIL BEARING PRESSURES
N.Y.C. BUILDING CODE 27-678

CLASS OF MATERIAL	DESCRIPTION	ALLOWABLE BEARING TONS / SQ. FT.
1-65	HARD SOUND ROCK	60
2-65	MEDIUM HARD ROCK	40
3-65	INTERMEDIATE ROCK	20
4-65	SOFT ROCK	8
5-65	HARDPAN	8 – 12
6-65	GRAVEL AND SOILS (SOIL GROUPS GW, GP, GM & GC AND GROUPS SW, SP & SM CONTAINING MORE THAN 10% GRAVEL)	4 – 10
7-65	SANDS (OTHER THAN FINE SANDS) (SOIL GROUPS SW, SP & SM BUT CONTAINING NOT MORE THAN 10% GRAVEL)	3 – 6
8-65	FINE SAND	2 – 4
9-65	CLAYS AND CLAY SOILS (SOIL GROUPS SC, CL & CH)	
	HARD	(5 MAX)
	MEDIUM	(2 MAX)
	SOFT	BY TEST
10-65	SILTS AND SILT SOILS (SOIL GROUPS ML & MH)	
	DENSE	3
	MEDIUM	1.5
	LOOSE	BY TEST
11-65	NOMINALLY UNSATISFACTORY BEARING MATERIALS	BY TEST

Guide to Compaction Related to Spoon Blows Per Foot

Gravel & Sand		Silt & Clay	
Very Loose	0 - 4	Soft	4 or less
Loose	5 - 10	Medium	5 to 8
Medium	11 - 30	Stiff	9 to 16
Dense	31 - 50	Very Stiff	17 to 32
Very Dense	Over 50	Hard	Over 32

SOIL DESCRIPTIONS ARE BY VISUAL EXAMINATION OF SOIL SAMPLES RECOVERED DURING DRILLING OPERATIONS
SOIL DESCRIPTIONS ARE IN ACCORD WITH THE UNIFIED SOILS CLASSIFICATION SYSTEM AND NYC BUILDING CODE SUBCHAPTER 11 ARTICLE 4.
ALL BORING ELEVATIONS ARE REFERENCED TO EXISTING GROUND LEVEL AS ZERO ELEVATION.

"N"	STANDARD PENETRATION TEST (2" SPOON, 140 lb HAMMER, 30" FALL)
N = 21 BLOWS PER FOOT	SPOON BLOW COUNT IS GENERALLY SHOWN IN 6" INCREMENTS FOR 2' DRIVE. TO OBTAIN BLOWS PER FOOT (N) USE THE 2nd & 3rd 6" INCREMENT

THIS REPORT IS SUBMITTED WITH THE SPECIFIC UNDERSTANDING THAT THE SOLE LIABILITY OF BIG APPLE TESTING LABORATORIES, INC., ITS ENGINEERS AND EMPLOYEES FOR ERRORS AND OMISSIONS IS LIMITED TO THE AMOUNT OF THE FEE PAID FOR THIS REPORT. THE USE OF THIS REPORT WILL CONSTITUTE AN ACCEPTANCE BY THE CLIENT OF THIS DISCLAIMER. THE FEE CHARGED FOR THIS REPORT IS PREDICTED UPON THIS LIMITATION OF LIABILITY WHICH IS THE ESSENCE OF THIS AGREEMENT. IF THESE TERMS ARE NOT ACCEPTABLE, CLIENT MUST NOTIFY B.A.T. LABS INC. IN WRITING BY CERTIFIED MAIL. RETURN RECEIPT REQUESTED WITHIN FIVE (5) DAYS. BIG APPLE TESTING LABORATORIES, INC., ITS ENGINEERS AND EMPLOYEES DO NOT ACCEPT ANY LIABILITY OR RESPONSIBILITY FOR PERSONS OTHER THAN THE CLIENT FOR WHOM THIS WORK WAS DIRECTLY PREPARED AND ANY SUCH PERSON, FIRM OR CORPORATION RELIES ON THIS REPORT AT HIS OWN RISK.

BORING CONTRACTOR'S CERTIFICATIONS

BIG APPLE TESTING LABORATORIES, INC. CERTIFIES AS TO THE ACCURACY OF THE SPOON AND CASING BLOWS AND ELEVATIONS AND METHOD OF BORING.

THE FOLLOWING EQUIPMENT WAS USED:

EQUIPMENT –
SPRAGUE & HENWOOD MODEL 30 ☐ 40 CL ☐
ACKER MODEL RGT ☐ LD ☐ NXB ☐
CME 55 ☐ CME 45 ☐

TYPE OF CORE BARRELS AND DIAMOND BITS:

	SIZE	O.D.	CORE DIAMETERS
☐	AX	1-7/8"	1-1/8"
☐	BX	2-3/8"	1-5/8"
☐	NX	2-15/16"	2-1/8"
☐	AXM	1-7/8"	1-1/8"
☐	NXM	2-15/16"	2-1/8"
☐	B	2"	1-3/8"

WIEGHT OF HAMMERS:
300 LBS. ON 2½" CASING – 18" DROP
140 LBS. ON 2" SPOON – 30" DROP
SPOON – SPLIT SAMPLER – 2" O.D. – 1⅜" I.D. (24" LONG)

STATE OF NEW YORK – MICHAEL JAFFANDER – NO. 49606 – LICENSED PROFESSIONAL ENGINEER

SEE WATER NOTES →

WATER NOTED ON PRINT IS ONLY FIRST INDICATION OF WATER.
FOR EXACT RESULTS CALL OUR WELL POINT TEST.

BIG APPLE TESTING LABORATORIES, INC.
151-18 6th Road Whitestone, N.Y. 11357
TEL: (718) 767-2900 FAX (718) 767-5610

SB # 36-93

CITY OF NEW YORK
PARKS & RECREATION

PROJECT: EAST RIVER PARK N.Y.C, N.Y.

DRAWN BY EP DATE: 11-29-93

CONTRACT NO.
M144-194
SHEET L-5, (6) OF 22

M-E-144-2250

AMERICO, HICKSVILLE, N.Y. #75321

MATERIAL SYMBOLS

- CONCRETE MASONRY UNIT BLOCK
- GYPSUM BOARD/CEMENT PANEL/ MORTAR/NONSHRINK GROUT
- CONCRETE
- BATT INSULATION
- RIGID INSULATION
- PORCELAIN TILE
- STRUCTURAL STEEL
- GRAVEL FILL
- COMPACTED FILL
- NEOPRENE
- VAPOR BARRIER
- CONCRETE MASONRY UNIT BRICK

DRAWING SYMBOLS

- (D) DOOR NUMBER
- STUCCO DETAIL NUMBER
- DOOR & WINDOW DETAIL NUMBER
- ELEVATION
- SECTION CUT
- BREAK LINE
- DETAIL NUMBER
- MATERIAL ABOVE OR BELOW
- (P-1) COLOR NUMBER - SEE SHEET A-2 FOR COLOR CHART

ABBREVIATIONS

BLK.	BLOCK	ST. STL.	STAINLESS STEEL
CMU.	CONCRETE MASONRY UNIT	THK.	THICK/THICKNESS
CONC.	CONCRETE	TPH.	TOILET PAPER HOLDER
CONT.	CONTINUOUS	W.C.	WATER CLOSET
℄	CENTER LINE	W/	WITH
DET.	DETAIL	WD.	WOOD
DWG.	DRAWING		
ELEC.	ELECTRIC		
ELEV.	ELEVATION		
EQ.	EQUAL		
F.D.	FLOOR DRAIN		
FIN.	FINISH		
FLR.	FLOOR		
GA	GAUGE		
GALV. STL.	GALVANIZED STEEL		
G.B.	GRAB BAR		
GYP. BD.	GYPSUM BOARD		
H/C	HANDICAP		
INFO.	INFORMATION		
INSUL.	INSULATIONN		
LAV.	LAVATORY		
MAX.	MAXIMUM		
MIN.	MINIMUM		
MTL.	METAL		
N.T.S.	NOT TO SCALE		
O.C.	ON CENTER		
PTD.	PAINTED		
REINF.	REINFORCED		
RM.	ROOM		
STL.	STEEL		

ZONING CALCULATIONS

. ZONING: PARK
AREA OF PARK: 58.2 ACRES.
AREA OF NEW BUILDING: 476 S.F.
F.A.R.: DOES NOT COUNT IN PARKS
(AREA OF BLDG - LESS THAN 8000 S.F.)

CONSTRUCTION CLASS 1C

EXTERIOR WALLS (4 HR): 8" CMU W/ INSULATED CONCRETE
CEILING (1 HR): PLASTER ON DUROCK
FLOOR (1 HR): 5" CONCRETE SLAB ON GRADE W/ PORCELAIN PAVERS

BUILDING DEPARTMENT NOTES:

20. GENERAL CONTRACTOR SHALL COORDINATE W/ CONTRACTORS FOR PLUMBING, HEATING, & VENTILATING, AND ELECTRICAL WORK TO FORM OPENINGS IN FLOOR, WALLS, AND ROOF TO ACCOMMODATE THE INSTALLATION OF THEIR WORK. DRAWINGS ARE DIAGRAMMATIC. ACTUAL OPENINGS SHALL BE DETERMINED BY LAYOUT IN THE FIELD.

21. "U" VALUES ARE IN COMPLIANCE WITH ENERGY CODE AS FOLLOWS:
WALLS - 'U' - 0.07
ROOF - 'U' - 0.02

22. CONTROLLED INSPECTION - SEE SPECS & SHEET NO. S-1

23. N.Y.C. PARKS DEPT. AND G.C. WILL COMPLY WITH L.L. 58/87, PER N.Y.C. BLDG. CODE REQUIREMENTS.

24. N.Y.C. PARKS DEPT. AND G.C. WILL COMPLY WITH L.L. 7/74, PER N.Y.C. BLDG. CODE REQUIREMENTS.

25. N.Y.C. PARKS DEPT. WILL COMPLY WITH N.Y.C. FIRE DEPT REGULATIONS. - WILL PROVIDE C.O. FIRE EXTINGUISHER IN STORAGE ROOM.

26. N.Y.C. PARKS DEPT WILL COCOMPLY WITH N.Y.C. ENERGY CODE.

27. FIRE RATING WILL CONFORM WITH CLASS 1A BLDG. CODE - TABLE 3-4

28. HANDICAP REQUIREMENTS WILL CONFORM TO L.L. 58

ROOM AREAS OCCUPANCY

NO OCCUPANCY

BUILDING DEPARTMENT NOTES

1. ALL WORK SHALL CONFORM TO THE BUILDING CODE OF THE CITY OF NEW YORK AS AMENDED TO DATE.
2. THE CONTRACTOR MUST OBTAIN ALL PERMITS AND FINAL APPROVAL OF COMPLETION OF WORK FROM THE NEW YORK CITY BUILDING DEPARTMENT.
3. AT LEAST 24 HOURS WRITTEN NOTICE SHALL BE GIVEN TO THE BUILDING DEPARTMENT PRIOR TO COMMENCEMENT OR ANY WORK AS PER C26.188.5
4. ALL LUMBER TO BE GRADE MARKED. LUMBER TO BE AS PER DRAWINGS. PLYWOOD SHALL BEAR IDENTIFICATION AS TO GRADE, TYPE, SPECIES OR IDENTIFICATION INDEX. LUMBER TO BE FIR #1 OR #2, fc=1450 PSI EXCEPT WHERE SPECIFIED OTHERWISE ON PLAN.
5. ALL STRUCTURAL STEEL FABRICATION AND ERECTION SHALL BE IN ACCORDANCE WITH THE LATEST ASTM SPECIFICATIONS FOR A-36 STEEL, WITH A DESIGN STRESS OF 24,000 PSI. THE CONTRACTOR SHALL FILE AN AFFIDAVIT OF THE PRODUCER OF STEEL CERTIFYING THAT THE PROVISIONS OF THE BUILDING CODE ARE MET. ALL WELDING TO BE PERFORMED BY A LICENSED WELDER. ALL STEEL SURFACES SHALL RECEIVE A SHOP COAT OR APPROVED RUST INHIBITOR PAINT.
6. THE CONTRACTOR SHALL FILE A FINAL SURVEY OF THE PROJECT WITH THE BUILDING DEPARTMENT AS PER C26.121.7 AT THE COMPLETION OF THE PROJECT.
7. CONTROLLED INSPECTION ITEMS: ALL MATERIALS DESIGNATED FOR CONTROLLED INSPECTIONS SHALL BE INSPECTED AND TESTED TO VERIFY COMPLIANCE WITH CODE REQUIREMENTS, UNLESS OTHERWISE SPECIFICALLY PROVIDED BY CODE PROVISIONS. ALL REQUIRED INSPECTIONS AND TESTS OF MATERIALS SHALL BE MADE AND WITNESSED BY OR UNDER THE SUPERVISION OF A REGISTERED ARCHITECT OR LICENSED ENGINEER RETAINED BY OR ON BEHALF OF THE OWNER. TEST REPORTS AND CERTIFICATE OF INSPECTION SHALL BE FILED WITH THE BUILDING DEPARTMENT. THE FOLLOWING ITEMS SHALL BE SUBJECT TO CONTROLLED INSPECTIONS:

SUB SOIL & FOTTING BOTTOM	27-723
FIRE PROTECTION	27-345
VENTILATION	27-779
CONCRETE SLAB	27-

8. ALL CONSTRUCTION SHALL BE IN ACCORDANCE WITH THE RULES AND REGULATIONS OF THE NEW YOUR CITY BUILDING CODE.
9. THE CONTRACTOR SHALL, UNTIL ACCEPTANCE BY THE OWNER, MAINTAIN THE BUILDING IN A SAFE CONDITION, AS PER C26-105.D.
10. THE OWNER SHALL BE RESPONSIBLE FOR THE SAFE MAINTENANCE OF THE BUILDING AND ITS FACILITIES C26-106.0 AFTER ACCEPTANCE FROM CONTRACTOR.
11. ALL MATERIALS, ASSEMBLIES, FORMS AND METHODS OF CONSTRUCTION AND SERVICE EQUIPMENT SHALL COMPLY WITH THE REQUIREMENTS OF SECTION C26-106.2.
12. ALL ELEVATIONS SHALL BE REFERRED TO DATUM USED BY TOPOGRAPHICAL BUREAU, OF THE BOROUGH OF BROOKLYN. ALL ELEVATIONS INDICATED ARE ACTUAL ELEVATIONS AND REFER TO DATUM USED BY TOPOGRAPHICAL BUREAU, BOROUGH PRESIDENT'S OFFICE, BROOKLYN.
13. FIRESTOPPING TO BE NOT LESS THAN 2" THICKNESS WITH TIGHT JOINTS OR TWO LAYERS OF 1" THICKNESS ASSEMBLED SO THAT THEY ARE NOT THROUGH JOINTS. THE INSTALLATION OF ALL FIRESTOPPING TO BE SUBJECT TO CONTROLLED INSPECTION. NON-COMBUSTIBLE FIRESTOPPING SHALL BE USED IN FIRE DIVISIONS, FIREPLACES, FLUES AND CHIMNEYS.
14. ALL NEW WORK SHALL COMPLY WITH THE APPLICABLE SECTION OF THE NEW YOUR STATE ENERGY CODE, AS AMENDED TO DATE.
15. ALL PLUMBING WORK SHALL BE PERFORMED BY A LICENSED PLUMBER AND SHALL CONFORM TO ALL HEALTH REQUIREMENTS.
16. ALL ELECTRICAL WORK SHALL BE DONE I ACCORDANCE WITH THE NEW YORK CITY ELECTRICAL CODE AS AMENDED TO DATE AND ANY OTHER HAVING JURISDICTION.
17. ALL CONCRETE SHALL BE AIR ENTRAINED AND HAVE A MINIMUM COMPRESSIVE STRENGTH OF 3,000 PSI PLAIN CONCRETE SHALL HAVE A MINIMUM CEMENT FACTOR OF FIVE BAGS PER CUBIC YARD OR CONCRETE. THE CONTRACTOR SHALL HAVE THREE (3) TEST CYLINDERS PROVIDED FOR EACH FIFTY CUBIC YARDS OF CONCRETE PLACED IN ONE DAY AND SHALL SUBMIT TEST REPORTS FOR CONCRETE TO BE FILED BY AMENDMENT BY THE CONTRACTOR.
18. ALL MASONRY SHALL BE LAID IN TYPE "M" OR "S" PORTLAND CEMENT MORTAR, 1:3 MIX WITH NOT MORE THAN 10% LIME BY VOLUME.
19. ALL SERVICE EQUIPMENT SHALL BE MEA APPROVED.

ZONING MAP

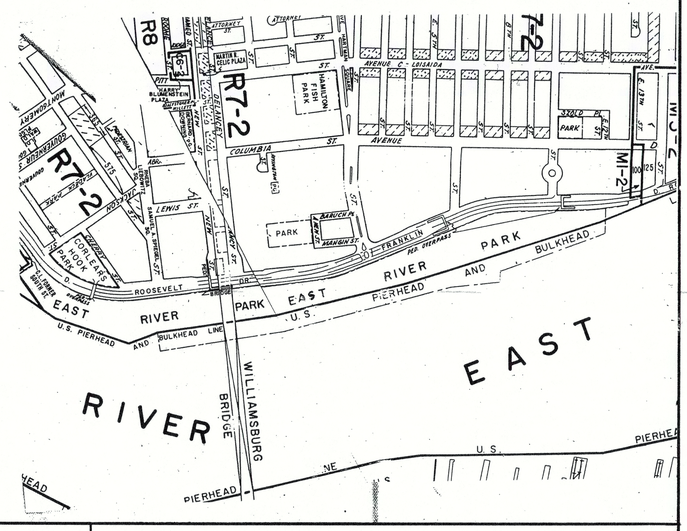

GENERAL NOTES

1. THE CONTRACTOR SHALL SUPPLY ALL LABOR, TOOLS, MATERIALS AND EQUIPMENT NECESSARY TO COMPLETE THE WORK AS CALLED FOR ON THE DRAWINGS AND SPECIFICATIONS.
2. THE CONTRACTOR SHALL AT ALL TIMES, KEEP THE PREMISES FREE FROM ACCUMULATION OF WASTE MATERIALS OR RUBBISH CAUSED BY HIS WORK OR EMPLOYEES, UPON COMPLETION, THE CONTRACTOR SHALL REMOVE ALL DEBRIS AND LEAVE THE PREMISES IN A "BROOM CLEAN" CONDITION.
3. ALL REMOVED MATERIAL & DEBRIS SHALL BE LEGALLY DISPOSED OF AWAY FROM THE PREMISES.
4. OMISSIONS FROM THE DRAWINGS OR SPECIFICATIONS OR THE MISDESCRIPTION OF DETAILS OF WORK WHICH ARE MANIFESTLY NECESSARY TO CARRY OUT THE INTENT OF THE DRAWINGS AND SPECIFICATIONS, OR WHICH ARE CUSTOMARILY PERFORMED, SHALL NOT RELIEVE THE CONTRACTOR FROM PERFORMING SUCH WORK, BUT SHALL BE PERFORMED AS IF CORRECTLY SET FORTH AND DESCRIBED TO FURNISH A COMPLETE INSTALLATION IN ACCEPTABLE CONDITION.
5. ALL EXISTING AREAS OF THE BUILDING THAT ARE DAMAGED BY THE CONTRACTOR SHALL BE RESTORED TO MATCH THE EXISTING AT NO ADDITIONAL COST TO THE OWNER.
6. THE CONTRACTOR SHALL VERIFY AND CHE'K ALL DIMENSIONS AND CONDITIONS AT THE SITE BEFORE BIDDING AND PROCEEDING INTO CONSTRUCTION AND SHALL BE RESPONSIBLE FOR SAME.
7. THE CONTRACTOR SHALL GUARANTEE ALL WORK PERFORMED UNDER THIS CONTRACT FOR A PERIOD OF ONE YEAR AFTER COMPLETION AND FINAL ACCEPTANCE BY THE OWNER.
8. THE CONTRACTOR SHALL COORDINATE ALL OPERATIONS WITH THE OWNER: SUCH AS WORK AREAS USED FOR MATERIAL STORAGE, ACCESS TO AND FROM THE WORK AREAS, TIMING AND SEQUENCE OF WORK, SPECIAL CONSIDERATIONS OF NOISY OPERATIONS, INTERRUPTIONS FOR MECHANICAL AND ELECTRICAL SERVICES, ETC.
9. ALL WORK PERFORMED BY THE CONTRACTOR SHALL BE DONE IN A GOOD WORKMANSHIPLIKE MANNER AND TO THE APPROVAL AND ACCEPTANCE OF THE OWNER.
10. THE CONTRACTOR SHALL BE HELD RESPONSIBLE FOR HIS WORK AND FOR COORDINATION BETWEEN HIS RESPECTIVE SUB-CONTRACTORS AND THEIR PORTION OF WORK.
11. ANY DISCREPANCIES IN THE PLANS OR DETAILS SHALL BE BROUGHT TO THE ATTENTION OF THE OWNER BEFORE PROCEEDING.
12. THE CONTRACTOR SHALL CHECK DETAILS FOR LOCATIONS OF ITEMS NOT DIMENSIONED ON THE PLANS.
13. THE CONTRACTOR SHALL PROVIDE AND MAINTAIN TEMPORARY FACILITIES FOR PROTECTION AND/OR ENCLOSURE OR AREAS OF WORK & PROTECTION OF AREAS WHERE THERE IS NO FURTHER WORK.
REMOVE TEMPORARY FACILITIES WHEN NO LONGER REQUIRED.
14. ALL WORK SHALL BE MANUFACTURED IN AMPLE TIME SO AS NOT TO DELAY THE PROGRESS OF WORK AND SHALL BE DELIVERED AT SUCH TIME AS REQUIRED FOR PROPER COORDINATION OF THE WORK.
15. THE SCOPE OF ALL DEMOLITION AND REMOVAL WORK TO BE PERFORMED SHALL NOT BE LIMITED BY THE DRAWINGS OR SPECIFICATIONS BUT SHALL INCLUDE ANY AND ALL WORK THAT SHALL BE REQUIRED OR DIRECTED BY THE ARCHITECT TO FACILITATE THE NEW WORK.
16. THE CONTRACTOR MUST TAKE EVERY MEASURE POSSIBLE TO LIMIT DUST, NOISE, VAPORS, ETC: TO DESIGNATED AREAS. METHOD FOR PROTECTION MUST BE APPROVED BY THE RESIDENT ENGINEER.
17. CHECK DETAILS FOR LOCATION OF ALL ITEMS NOT DIMENSIONED ON PLANS.
18. THE CONTRACTOR SHALL NOT HAVE EXCLUSIVE USE OR OCCUPANCY OF THE SITE BUT SHALL COORDINATE IN EVERY WAY WITH THE OTHER CONTRACTOR. G.C. TO ACQUAINT THEMSELVES WITH OTHER JOB PRIOR TO BIDDING WORK. ALL DISPUTES AS TO THE RIGHTS OF CONTRACTORS SHALL BE SETTLED BY THE ENGINEER, AND HIS/HER DECISION SHALL BE FINAL.

CITY OF NEW YORK
PARKS & RECREATION
Olmsted Center
Flushing Meadows Corona Park
Flushing, New York 11368

PROJECT TITLE: THE CONSTRUCTION OF A COMFORT STATION IN EAST RIVER PARK LOCATED OPPOSITE EAST 10TH STREET & THE F.D.R. DRIVE, BOROUGH OF MANHATTAN

DRAWING TITLE: GENERAL NOTES & LEGENDS

DATE 3.30.94	ARCHITECT OF RECORD S. ROSENTHAL	DESIGNED BY S.R./M.K.
	DRAWN BY GADD (B.B.M)	SCALE AS NOTED
	CHECKED BY M. KNIGHT	CONTRACT NO. M144-194
	APPROVED BY DIRECTOR S. ROSENTHAL	SHEET NO. A-2 SHEETS
	APPROVED BY CHIEF OF DESIGN G GEIERSBACH	7 OF 22

MATERIAL SYMBOLS

- CONCRETE MASONRY UNIT BLOCK
- GYPSUM BOARD/CEMENT PANEL/ MORTAR/NONSHRINK GROUT
- CONCRETE
- BATT INSULATION
- RIGID INSULATION
- PORCELAIN TILE
- STRUCTURAL STEEL
- GRAVEL FILL
- COMPACTED FILL
- NEOPRENE
- VAPOR BARRIER
- CONCRETE MASONRY UNIT BRICK

DRAWING SYMBOLS

- (D) DOOR NUMBER
- STUCCO DETAIL NUMBER
- △ DOOR & WINDOW DETAIL NUMBER
- ELEVATION
- SECTION CUT
- BREAK LINE
- DETAIL NUMBER
- MATERIAL ABOVE OR BELOW
- (P-1) COLOR NUMBER - SEE SHEET A-2 FOR COLOR CHART

ABBREVIATIONS

BLK.	BLOCK	ST. STL.	STAINLESS STEEL
CMU.	CONCRETE MASONRY UNIT	THK.	THICK/THICKNESS
CONC.	CONCRETE	TPH.	TOILET PAPER HOLDER
CONT.	CONTINUOUS	W.C.	WATER CLOSET
℄	CENTER LINE	W/	WITH
DET.	DETAIL	WD.	WOOD
DWG.	DRAWING		
ELEC.	ELECTRIC		
ELEV.	ELEVATION		
EQ.	EQUAL		
F.D.	FLOOR DRAIN		
FIN.	FINISH		
FLR.	FLOOR		
GA	GAUGE		
GALV. STL.	GALVANIZED STEEL		
G.B.	GRAB BAR		
GYP. BD.	GYPSUM BOARD		
H/C	HANDICAP		
INFO.	INFORMATION		
INSUL.	INSULATIONN		
LAV.	LAVATORY		
MAX.	MAXIMUM		
MIN.	MINIMUM		
MTL.	METAL		
N.T.S.	NOT TO SCALE		
O.C.	ON CENTER		
PTD.	PAINTED		
REINF.	REINFORCED		
RM.	ROOM		
STL.	STEEL		

ZONING CALCULATIONS

ZONING: PARK
AREA OF PARK: 58·2 ACRES.
AREA OF NEW BUILDING: 476 S.F.
F.A.R.: DOES NOT COUNT IN PARKS (AREA OF BLDG. LESS THAN 5000 S.F.)

CONSTRUCTION CLASS 1C

EXTERIOR WALLS (4 HR): 8" CMU W/ INSULATED CONCRETE
CEILING (1 HR): PLASTER ON DUROCK
FLOOR (1 HR): 5" CONCRETE SLAB ON GRADE W/ PORCELAIN PAVERS

BUILDING DEPARTMENT NOTES:

20. GENERAL CONTRACTOR SHALL COORDINATE W/ CONTRACTORS FOR PLUMBING, HEATING, & VENTILATING, AND ELECTRICAL WORK TO FORM OPENINGS IN FLOOR, WALLS, AND ROOF TO ACCOMMODATE THE INSTALLATION OF THEIR WORK. DRAWINGS ARE DIAGRAMMATIC. ACTUAL OPENINGS SHALL BE DETERMINED BY LAYOUT IN THE FIELD.

21. "U" VALUES ARE IN COMPLIANCE WITH ENERGY CODE AS FOLLOWS:
WALLS - 'U' = 0.07
ROOF - 'U' = 0.02

22. CONTROLLED INSPECTION - SEE SPECS & SHEET NO. S-1

23. N.Y.C. PARKS DEPT. AND G.C. WILL COMPLY WITH L.L. 58/87, PER N.Y.C. BLDG. CODE REQUIREMENTS.

24. N.Y.C. PARKS DEPT. AND G.C. WILL COMPLY WITH L.L. 7/74, PER N.Y.C. BLDG. CODE REQUIREMENTS.

25. N.Y.C. PARKS DEPT. WILL COMPLY WITH N.Y.C. FIRE DEPT REGULATIONS. - WILL PROVIDE C.O. FIRE EXTINGUISHER IN STORAGE ROOM.

26. N.Y.C. PARKS DEPT WILL COCOMPLY WITH N.Y.C. ENERGY CODE.

27. FIRE RATING WILL CONFORM WITH CLASS 1A BLDG. CODE - TABLE 3-4

28. HANDICAP REQUIREMENTS WILL CONFORM TO L.L. 58/87

29. BUILDING FALLS IN FLOOD HAZARD AREA PANEL 47(OF 131) - FLOOD INSURANCE RATE MAP (FIRM) ZONE A5- EL 10' N.Y.C. PARKS DEPT. WILL COMPLY WITH SEC. 27-316 AND SEC. 27-317

30. N.Y.C. PARKS DEPT WILL COMPLY WITH SEC. 27-247 FOR B-2 . STORAGE ROOM USED AS MECHANICAL EQUIPMENT ROOM WILL BE RESTRICTED TO STORAGE OF NON COMBUSTIBLE NONFLAMABLE MATERIALS.

1

ROOM AREAS OCCUPANCY

NO OCCUPANCY

BUILDING DEPARTMENT NOTES

1. ALL WORK SHALL CONFORM TO THE BUILDING CODE OF THE CITY OF NEW YORK AS AMENDED TO DATE.
2. THE CONTRACTOR MUST OBTAIN ALL PERMITS AND FINAL APPROVAL OF COMPLETION OF WORK FROM THE NEW YORK CITY BUILDING DEPARTMENT.
3. AT LEAST 24 HOURS WRITTEN NOTICE SHALL BE GIVEN TO THE BUILDING DEPARTMENT PRIOR TO COMMENCEMENT OR ANY WORK AS PER C26.188.5
4. ALL LUMBER TO BE GRADE MARKED. LUMBER TO BE AS PER DRAWINGS. PLYWOOD SHALL BEAR IDENTIFICATION AS TO GRADE, TYPE, SPECIES OR IDENTIFICATION INDEX. LUMBER TO BE FIR #1 OR #2,fc=1450 PSI EXCEPT WHERE SPECIFIED OTHERWISE ON PLAN.
5. ALL STRUCTURAL STEEL FABRICATION AND ERECTION SHALL BE IN ACCORDANCE WITH THE LATEST ASTM SPECIFICATIONS FOR A-36 STEEL, WITH A DESIGN STRESS OF 24,000 PSI. THE CONTRACTOR SHALL FILE AN AFFIDAVIT OF THE PRODUCER OF STEEL CERTIFYING THAT THE PROVISIONS OF THE BUILDING CODE ARE MET. ALL WELDING TO BE PERFORMED BY A LICENSED WELDER. ALL STEEL SURFACES SHALL RECEIVE A SHOP COAT OR APPROVED RUST INHIBITOR PAINT.
6. THE CONTRACTOR SHALL FILE A FINAL SURVEY OF THE PROJECT WITH THE BUILDING DEPARTMENT AS PER C26.121.7 AT THE COMPLETION OF THE PROJECT.
7. CONTROLLED INSPECTION ITEMS: ALL MATERIALS DESIGNATED FOR CONTROLLED INSPECTIONS SHALL BE INSPECTED AND TESTED TO VERIFY COMPLIANCE WITH CODE REQUIREMENTS, UNLESS OTHERWISE SPECIFICALLY PROVIDED BY CODE PROVISIONS. ALL REQUIRED INSPECTIONS AND TESTS OF MATERIALS SHALL BE MADE AND WITNESSED BY OR UNDER THE SUPERVISION OF A REGISTERED ARCHITECT OR LICENSED ENGINEER RETAINED BY OR ON BEHALF OF THE OWNER. TEST REPORTS AND CERTIFICATE OF INSPECTION SHALL BE FILED WITH THE BUILDING DEPARTMENT. THE FOLLOWING ITEMS SHALL BE SUBJECT TO CONTROLLED INSPECTIONS:

SUB SOIL & FOTTING BOTTOM	27-723
FIRE PROTECTION	27-345
VENTILATION	27-779
CONCRETE SLAB	27-

8. ALL CONSTRUCTION SHALL BE IN ACCORDANCE WITH THE RULES AND REGULATIONS OF THE NEW YOUR CITY BUILDING CODE.
9. THE CONTRACTOR SHALL, UNTIL ACCEPTANCE BY THE OWNER, MAINTAIN THE BUILDING IN A SAFE CONDITION, AS PER C26-105.D.
10. THE OWNER SHALL BE RESPONSIBLE FOR THE SAFE MAINTENANCE OF THE BUILDING AND ITS FACILITIES C26-106.0 AFTER ACCEPTANCE FROM CONTRACTOR.
11. ALL MATERIALS, ASSEMBLIES, FORMS AND METHODS OF CONSTRUCTION AND SERVICE EQUIPMENT SHALL COMPLY WITH THE REQUIREMENTS OF SECTION C26-106.2.
12. ALL ELEVATIONS SHALL BE REFERRED TO DATUM USED BY TOPOGRAPHICAL BUREAU, OF THE BOROUGH OF BROOKLYN. ALL ELEVATIONS INDICATED ARE ACTUAL ELEVATIONS AND REFER TO DATUM USED BY TOPOGRAPHICAL BUREAU, BOROUGH PRESIDENT'S OFFICE, BROOKLYN.
13. FIRESTOPPING TO BE NOT LESS THAN 2" THICKNESS WITH TIGHT JOINTS OR TWO LAYERS OF 1" THICKNESS ASSEMBLED SO THAT THEY ARE NOT THROUGH JOINTS. THE INSTALLATION OF ALL FIRESTOPPING TO BE SUBJECT TO CONTROLLED INSPECTION. NON-COMBUSTIBLE FIRESTOPPING SHALL BE USED IN FIRE DIVISIONS, FIREPLACES, FLUES AND CHIMNEYS.
14. ALL NEW WORK SHALL COMPLY WITH THE APPLICABLE SECTION OF THE NEW YOUR STATE ENERGY CODE, AS AMENDED TO DATE.
15. ALL PLUMBING WORK SHALL BE PERFORMED BY A LICENSED PLUMBER AND SHALL CONFORM TO ALL HEALTH REQUIREMENTS.
16. ALL ELECTRICAL WORK SHALL BE DONE I ACCORDANCE WITH THE NEW YORK CITY ELECTRICAL CODE AS AMENDED TO DATE AND ANY OTHER HAVING JURISDICTION.
17. ALL CONCRETE SHALL BE AIR ENTRAINED AND HAVE A MINIMUM COMPRESSIVE STRENGTH OF 3,000 PSI PLAIN CONCRETE SHALL HAVE A MINIMUM CEMENT FACTOR OF FIVE BAGS PER CUBIC YARD OR CONCRETE. THE CONTRACTOR SHALL HAVE THREE (3) TEST CYLINDERS PROVIDED FOR EACH FIFTY CUBIC YARDS OF CONCRETE PLACED IN ONE DAY AND SHALL SUBMIT TEST REPORTS FOR CONCRETE TO BE FILED BY AMENDMENT BY THE CONTRACTOR.
18. ALL MASONRY SHALL BE LAID IN TYPE "M" OR "S" PORTLAND CEMENT MORTAR. 1:3 MIX WITH NOT MORE THAN 10% LIME BY VOLUME.
19. ALL SERVICE EQUIPMENT SHALL BE MEA APPROVED.

ZONING MAP

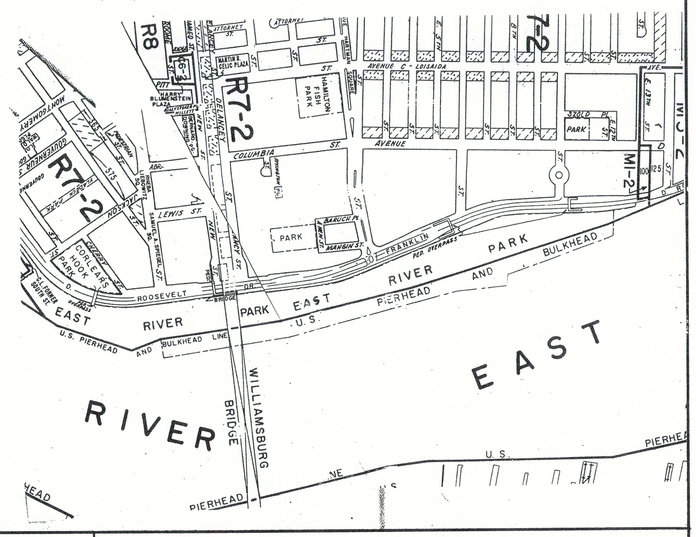

GENERAL NOTES

1. THE CONTRACTOR SHALL SUPPLY ALL LABOR, TOOLS, MATERIALS AND EQUIPMENT NECESSARY TO COMPLETE THE WORK AS CALLED FOR ON THE DRAWINGS AND SPECIFICATIONS.
2. THE CONTRACTOR SHALL AT ALL TIMES, KEEP THE PREMISES FREE FROM ACCUMULATION OF WASTE MATERIALS OR RUBBISH CAUSED BY HIS WORK OR EMPLOYEES, UPON COMPLETION, THE CONTRACTOR SHALL REMOVE ALL DEBRIS AND LEAVE THE PREMISES IN A "BROOM CLEAN" CONDITION.
3. ALL REMOVED MATERIAL & DEBRIS SHALL BE LEGALLY DISPOSED OF AWAY FROM THE PREMISES.
4. OMISSIONS FROM THE DRAWINGS OR SPECIFICATIONS OR THE MISDESCRIPTION OF DETAILS OF WORK WHICH ARE MANIFESTLY NECESSARY TO CARRY OUT THE INTENT OF THE DRAWINGS AND SPECIFICATIONS, OR WHICH ARE CUSTOMARILY PERFORMED, SHALL NOT RELIEVE THE CONTRACTOR FROM PERFORMING SUCH WORK, BUT SHALL BE PERFORMED AS IF CORRECTLY SET FORTH AND DESCRIBED TO FURNISH A COMPLETE INSTALLATION IN ACCEPTABLE CONDITION.
5. ALL EXISTING AREAS OF THE BUILDING THAT ARE DAMAGED BY THE CONTRACTOR SHALL BE RESTORED TO MATCH THE EXISTING AT NO ADDITIONAL COST TO THE OWNER.
6. THE CONTRACTOR SHALL VERIFY AND CHECK ALL DIMENSIONS AND CONDITIONS AT THE SITE BEFORE BIDDING AND PROCEEDING INTO CONSTRUCTION AND SHALL BE RESPONSIBLE FOR SAME.
7. THE CONTRACTOR SHALL GUARANTEE ALL WORK PERFORMED UNDER THIS CONTRACT FOR A PERIOD OF ONE YEAR AFTER COMPLETION AND FINAL ACCEPTANCE BY THE OWNER.
8. THE CONTRACTOR SHALL COORDINATE ALL OPERATIONS WITH THE OWNER: SUCH AS WORK AREAS USED FOR MATERIAL STORAGE, ACCESS TO AND FROM THE WORK AREAS, TIMING AND SEQUENCE OF WORK, SPECIAL CONSIDERATIONS OF NOISY OPERATIONS, INTERRUPTIONS FOR MECHANICAL AND ELECTRICAL SERVICES, ETC.
9. ALL WORK PERFORMED BY THE CONTRACTOR SHALL BE DONE IN A GOOD WORKMANSHIPLIKE MANNER AND TO THE APPROVAL AND ACCEPTANCE OF THE OWNER.
10. THE CONTRACTOR SHALL BE HELD RESPONSIBLE FOR HIS WORK AND FOR COORDINATION BETWEEN HIS RESPECTIVE SUB-CONTRACTORS AND THEIR PORTION OF WORK.
11. ANY DISCREPANCIES IN THE PLANS OR DETAILS SHALL BE BROUGHT TO THE ATTENTION OF THE OWNER BEFORE PROCEEDING.
12. THE CONTRACTOR SHALL CHECK DETAILS FOR LOCATIONS OF ITEMS NOT DIMENSIONED ON THE PLANS.
13. THE CONTRACTOR SHALL PROVIDE AND MAINTAIN TEMPORARY FACILITIES FOR PROTECTION AND/OR ENCLOSURE OR AREAS OF WORK & PROTECTION OF AREAS WHERE THERE IS NO FURTHER WORK.
REMOVE TEMPORARY FACILITIES WHEN NO LONGER REQUIRED.
14. ALL WORK SHALL BE MANUFACTURED IN AMPLE TIME SO AS NOT TO DELAY THE PROGRESS OF WORK AND SHALL BE DELIVERED AT SUCH TIME AS REQUIRED FOR PROPER COORDINATION OF THE WORK.
15. THE SCOPE OF ALL DEMOLITION AND REMOVAL WORK TO BE PERFORMED SHALL NOT BE LIMITED BY THE DRAWINGS OR SPECIFICATIONS BUT SHALL INCLUDE ANY AND ALL WORK THAT SHALL BE REQUIRED OR DIRECTED BY THE ARCHITECT TO FACILITATE THE NEW WORK.
16. THE CONTRACTOR MUST TAKE EVERY MEASURE POSSIBLE TO LIMIT DUST, NOISE, VAPORS, ETC: TO DESIGNATED AREAS. METHOD FOR PROTECTION MUST BE APPROVED BY THE RESIDENT ENGINEER.
17. CHECK DETAILS FOR LOCATION OF ALL ITEMS NOT DIMENSIONED ON PLANS.
18. THE CONTRACTOR SHALL NOT HAVE EXCLUSIVE USE OR OCCUPANCY OF THE SITE BUT SHALL COORDINATE IN EVERY WAY WITH THE OTHER CONTRACTOR. G.C. TO ACQUAINT THEMSELVES WITH OTHER JOB PRIOR TO BIDDING WORK. ALL DISPUTES AS TO THE RIGHTS OF CONTRACTORS SHALL BE SETTLED BY THE ENGINEER, AND HIS/HER DECISION SHALL BE FINAL.

1	REVISED FOR BUILDING DEPT. OBJECTION	12-1-94

CITY OF NEW YORK
PARKS & RECREATION
Olmsted Center
Flushing Meadows Corona Park
Flushing, New York 11368

PROJECT TITLE: THE CONSTRUCTION OF A COMFORT STATION IN EAST RIVER PARK, LOCATED OPPOSITE EAST 10TH STREET & THE F.D.R. DRIVE, BOROUGH OF MANHATTAN

DRAWING TITLE: GENERAL NOTES & LEGENDS

DATE 3.30.94	ARCHITECT OF RECORD S. ROSENTHAL	DESIGNED BY SR/MK.
	DRAWN BY GADD (B.B.M)	SCALE AS NOTED
	CHECKED BY M. KNIGHT	CONTRACT NO. M144-194
	APPROVED BY DIRECTOR S. ROSENTHAL	SHEET NO. A-2 SHEETS
	APPROVED BY CHIEF OF DESIGN G GEIERSBACH	7 OF 22

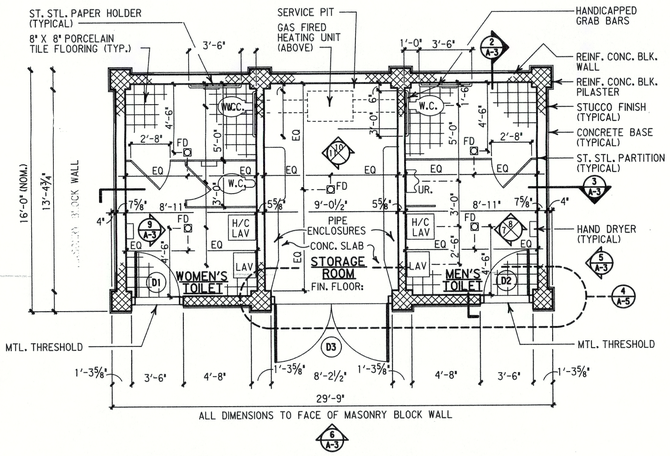

1 A-3 BUILDING FLOOR PLAN
SCALE: 1/4"=1'-0"

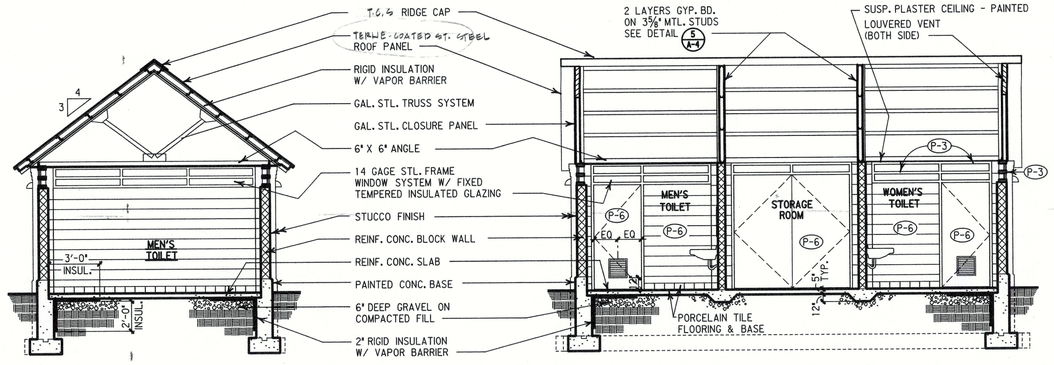

2 A-3 BUILDING SECTION
SCALE: 1/4"=1'-0"

3 A-3 BUILDING SECTION
SCALE: 1/4"=1'-0"

DOOR SCHEDULE

NO.	TYPE	SIZE	THK.	MAT.	FIN.	FRAME H.	FRAME J.	SADDLE	HARDW.
1	A	3'-0" X 7'-0"	1¾"	H.M.	PTD	2	4	METAL	TYPE 1
2	A	3'-0" X 7'-0"	1¾"	H.M.	PTD	2	4	METAL	TYPE 1
3	B	(2) 3'-10¼"X7'-7"	1¾"	H.M.	PTD	2	4	NONE	TYPE 2

1. WEATHERSTRIP ALL DOORS
2. SEE SPECS FOR HARDWARE SETS - (TYPE #1 & #2)
3. ALL DOOR FRAMES TO BE 14 GA. GALV. STEEL

INTERIOR FINISH SCHEDULE

NO.	ROOM NAME	FLOOR	WALLS	BASE	CEILING
1	MEN'S TOILET RM.	PORCELAIN PAVERS	PAINTED BLOCK	PORCELAIN PAVERS	PAINTED PLASTER
2	WOMEN'S TOILET RM.	PORCELAIN PAVERS	PAINTED BLOCK	PORCELAIN PAVERS	PAINTED PLASTER
3	STORAGE ROOM	PTD. CONC.	NONE	NONE	NONE

1. ALL INTERIOR ACCESSORIES & FIXTURES TO COMPLY WITH LOCAL LAW 58
2. SEE SHEET A-2 FOR INTERIOR ELEVATIONS

FINISH COLOR CHART

KEY	MANUFACTURER'S REFERENCE	COLOR	NUMBER
P-1	THORO SYSTEM PRODUCTS		
P-2	THORO SYSTEM PRODUCTS		
P-3	TERNE COATED STAINLESS STL.		
P-4	BENJAMIN MOORE		
P-5	BENJAMIN MOORE		
P-6	SANITILE CARBOLINE		

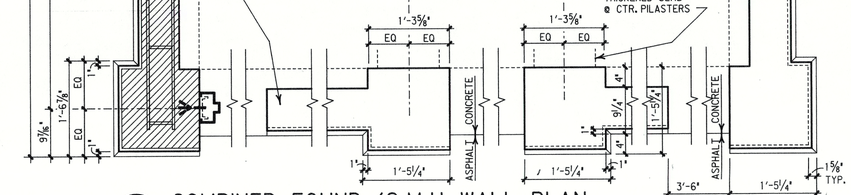

4 A-3 COMBINED FOUND./C.M.U. WALL PLAN
SCALE: 1"=1'-0"

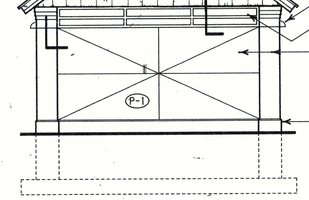

5 A-3 SIDE ELEVATION
SCALE: 1/4"=1'-0"

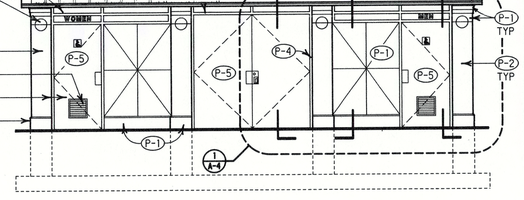

6 A-3 BUILDING FRONT ELEVATION
SCALE: 1/4"=1'-0"

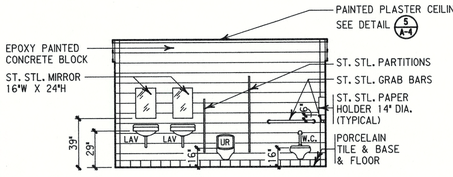

7 A-3 MEN'S TOILET
SCALE: 1/4"=1'-0"

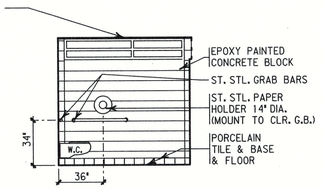

8 A-3 MEN'S TOILET
SCALE: 1/4"=1'-0"
WOMEN'S TOILET OPPOSITE HAND

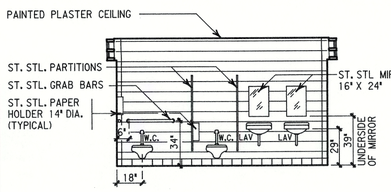

9 A-3 WOMEN'S TOIL.
SCALE: 1/4"=1'-0"

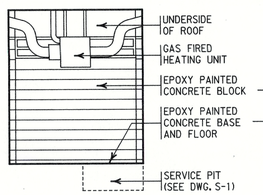

10 A-3 STOR. RM.
SCALE: 1/4"=1'-0"

NOTE:
ALL WORK TO CONFORM TO LOCAL LAW 58/87 FOR HANDICAP ACCESS

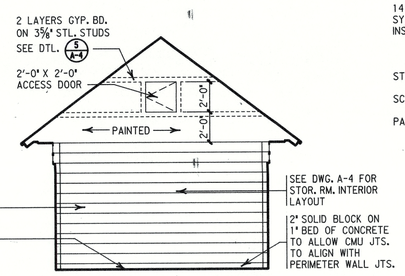

11 A-3 STORAGE ROOM
SCALE: 1/4"=1'-0"

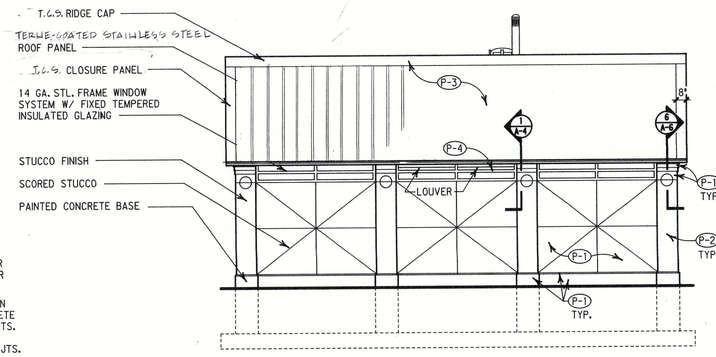

12 A-3 BUILDING REAR ELEVATION
SCALE: 1/4"=1'-0"

CITY OF NEW YORK
PARKS & RECREATION
Olmsted Center
Flushing Meadows Corona Park
Flushing, New York 11368

PROJECT TITLE: THE CONSTRUCTION OF A COMFORT STATION IN EAST RIVER PARK, LOCATED BTW. EAST 10TH STREET & THE F.D.R. DRIVE BOROUGH OF MANHATTAN

DRAWING TITLE: PLANS, ELEVATIONS, SECTIONS, SCHEDULES

DATE 3.30.94	ARCHITECT OF RECORD G. ROSENTHAL	DESIGNED BY S.R./M.K.
	DRAWN BY CADD (B.B.M)	SCALE AS NOTED
	CHECKED BY M. KNIGHT	CONTRACT NO. M144-199
	APPROVED BY DIRECTOR G. ROSENTHAL	SHEET NO. A-3 SHEETS
	APPROVED BY CHIEF OF DESIGN G. GEIERBACH	8 OF 22

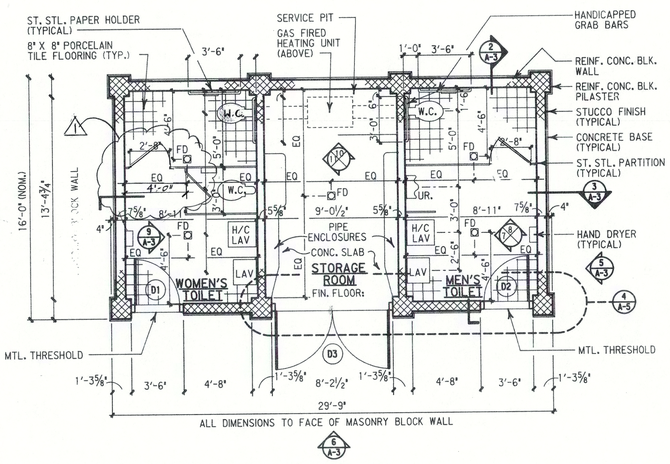

1 A-3 BUILDING FLOOR PLAN

SCALE: 1/4"=1'-0"

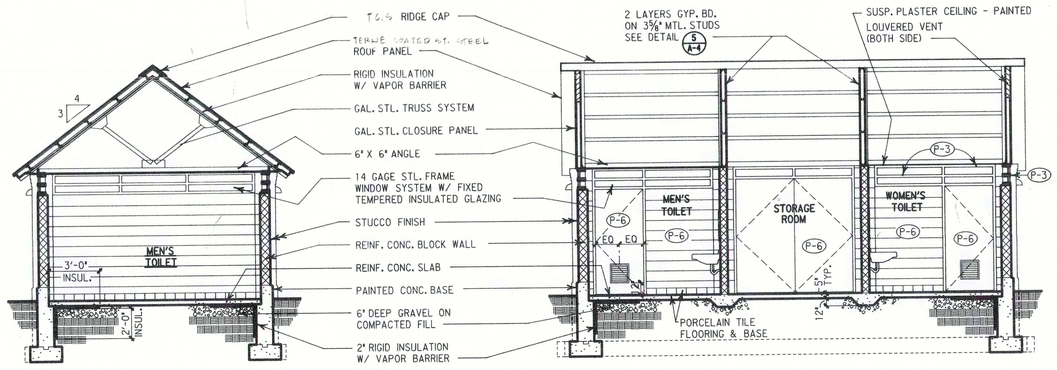

2 A-3 BUILDING SECTION

SCALE: 1/4"=1'-0"

3 A-3 BUILDING SECTION

SCALE: 1/4"=1'-0"

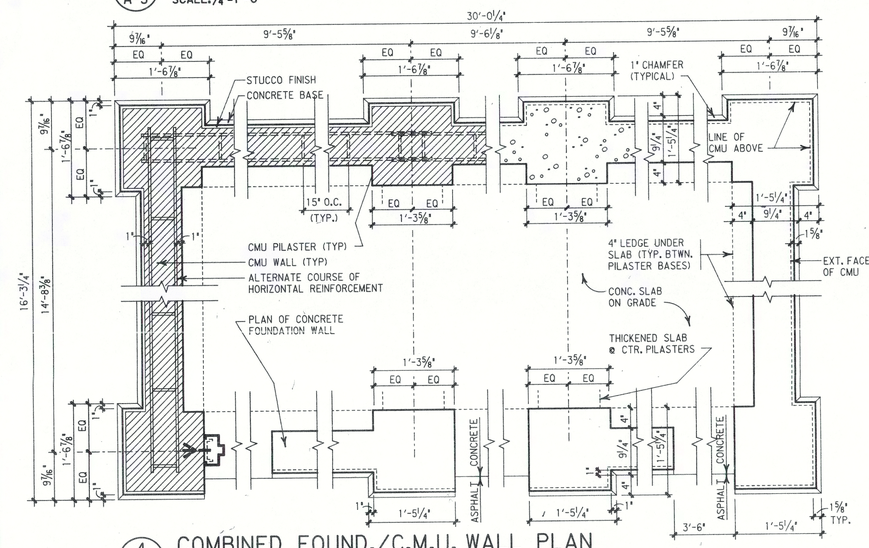

4 A-3 COMBINED FOUND./C.M.U. WALL PLAN

SCALE: 1"=1'-0"

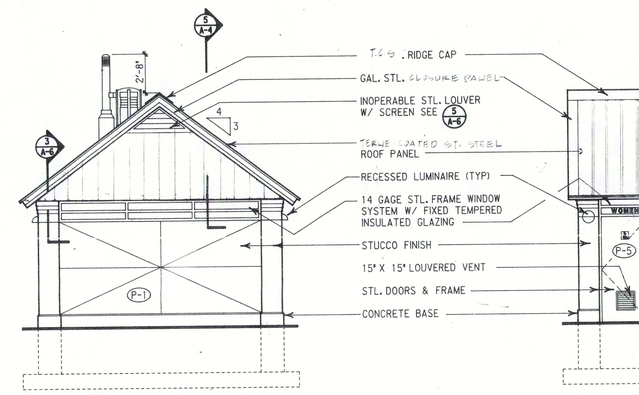

5 A-3 SIDE ELEVATION

SCALE: 1/4"=1'-0"

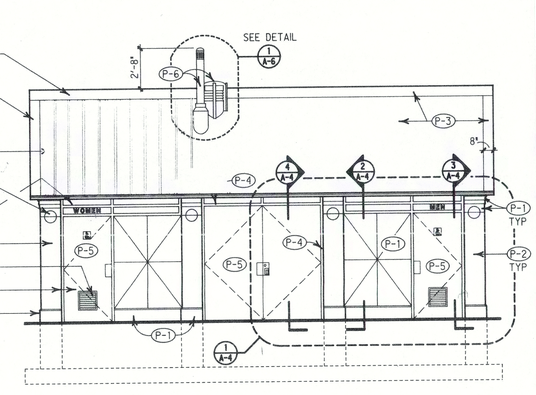

6 A-3 BUILDING FRONT ELEVATION

SCALE: 1/4"=1'-0"

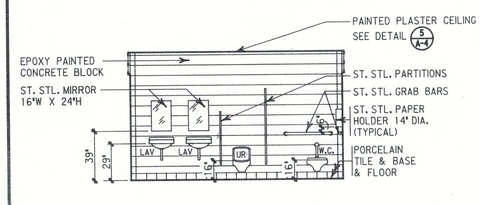

7 A-3 MEN'S TOILET

SCALE: 1/4"=1'-0"

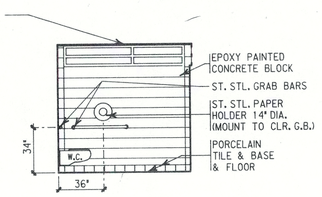

8 A-3 MEN'S TOILET

SCALE: 1/4"=1'-0" WOMEN'S TOILET OPPOSITE HAND

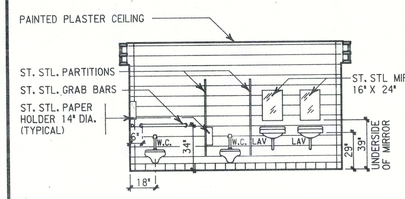

9 A-3 WOMEN'S TOIL.

SCALE: 1/4"=1'-0"

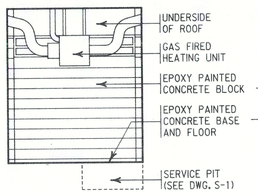

10 A-3 STOR. RM.

SCALE: 1/4"=1'-0"

NOTE:
ALL WORK TO CONFORM TO LOCAL LAW 58/87 FOR HANDICAP ACCESS

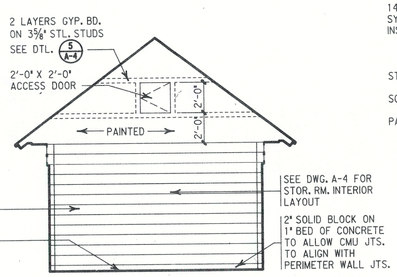

11 A-3 STORAGE ROOM

SCALE: 1/4"=1'-0"

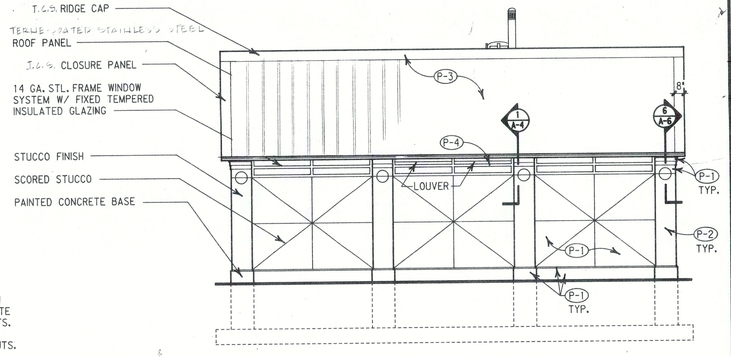

12 A-3 BUILDING REAR ELEVATION

SCALE: 1/4"=1'-0"

DOOR SCHEDULE

NO.	TYPE	SIZE	THK.	MAT.	FIN.	FRAME H.	FRAME J.	SADDLE	HARDW.
1	A	3'-0" X 7'-0"	1¾"	H.M.	PTD	2	4	METAL	TYPE 1
2	A	3'-0" X 7'-0"	1¾"	H.M.	PTD	2	4	METAL	TYPE 1
3	B	(2) 3'-10¼"X7'-7"	1¾"	H.M.	PTD	2	4	NONE	TYPE 2

1. WEATHERSTRIP ALL DOORS
2. SEE SPECS FOR HARDWARE SETS - (TYPE #1 & #2)
3. ALL DOOR FRAMES TO BE 14 GA. GALV. STEEL

INTERIOR FINISH SCHEDULE

NO.	ROOM NAME	FLOOR	WALLS	BASE	CEILING
1	MEN'S TOILET RM.	PORCELAIN PAVERS	PAINTED BLOCK	PORCELAIN PAVERS	PAINTED PLASTER
2	WOMEN'S TOILET RM.	PORCELAIN PAVERS	PAINTED BLOCK	PORCELAIN PAVERS	PAINTED PLASTER
3	STORAGE ROOM	PTD. CONC.	NONE	NONE	NONE

1. ALL INTERIOR ACCESSORIES & FIXTURES TO COMPLY WITH LOCAL LAW 58
2. SEE SHEET A-2 FOR INTERIOR ELEVATIONS

FINISH COLOR CHART

KEY	MANUFACTURER'S REFERENCE	COLOR	NUMBER
P-1	THORO SYSTEM PRODUCTS		
P-2	THORO SYSTEM PRODUCTS		
P-3	TERNE COATED STAINLESS STL.		
P-4	BENJAMIN MOORE		
P-5	BENJAMIN MOORE		
P-6	SANITILE CARBOLINE		

1	REVISED FOR BUILDING DEPT. OBJECTIONS	12-1-94

CITY OF NEW YORK
PARKS & RECREATION
Olmsted Center
Flushing Meadows Corona Park
Flushing, New York 11368

PROJECT TITLE: THE CONSTRUCTION OF A COMFORT STATION IN EAST RIVER PARK, LOCATED MID. EAST 10TH STREET & THE F.D.R. DRIVE BOROUGH OF MANHATTAN

DRAWING TITLE: PLANS, ELEVATIONS, SECTIONS, SCHEDULES

DATE 3.30.94	ARCHITECT OF RECORD S. ROSENTHAL	DESIGNED BY S.R./M.K.
	DRAWN BY CADD (B.B.M.)	SCALE AS NOTED
	CHECKED BY M. KNIGHT	CONTRACT NO. M144-194
	APPROVED BY DIRECTOR S. ROSENTHAL	SHEET NO. A-3 SHEETS
	APPROVED BY CHIEF OF DESIGN G. GEIERBACH	8 OF 22

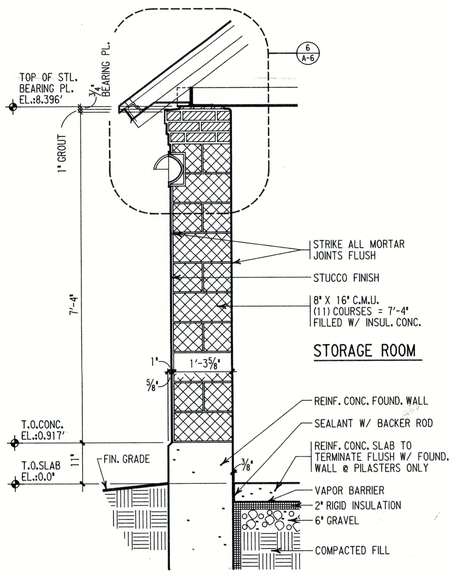

1 A-4 SECTION @ PILASTER

SCALE: ¾"=1'-0"

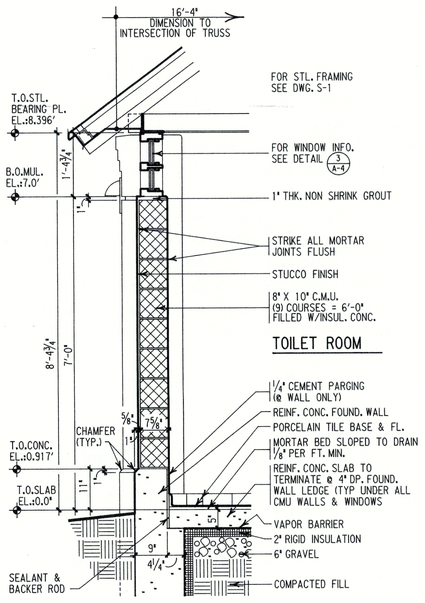

2 A-4 SECTION @ WINDOW

SCALE: ¾"=1'-0"

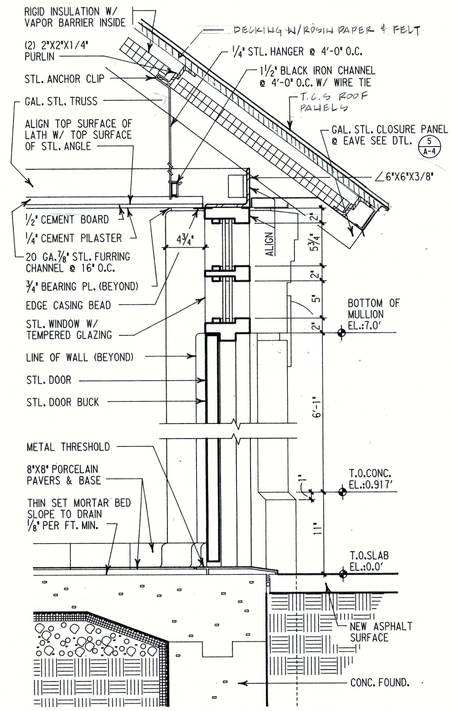

3 A-4 SECTION @ TOILET DOOR

SCALE: 1½"=1'-0"

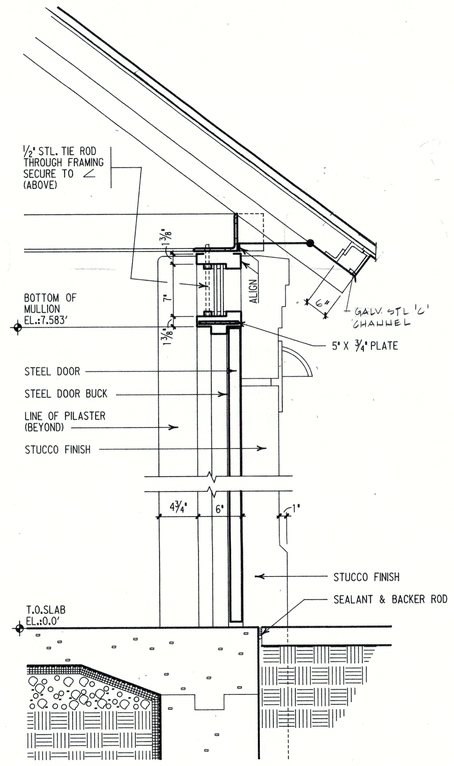

4 A-4 SECTION @ STOR. RM. DOOR

SCALE: 1½"=1'-0"

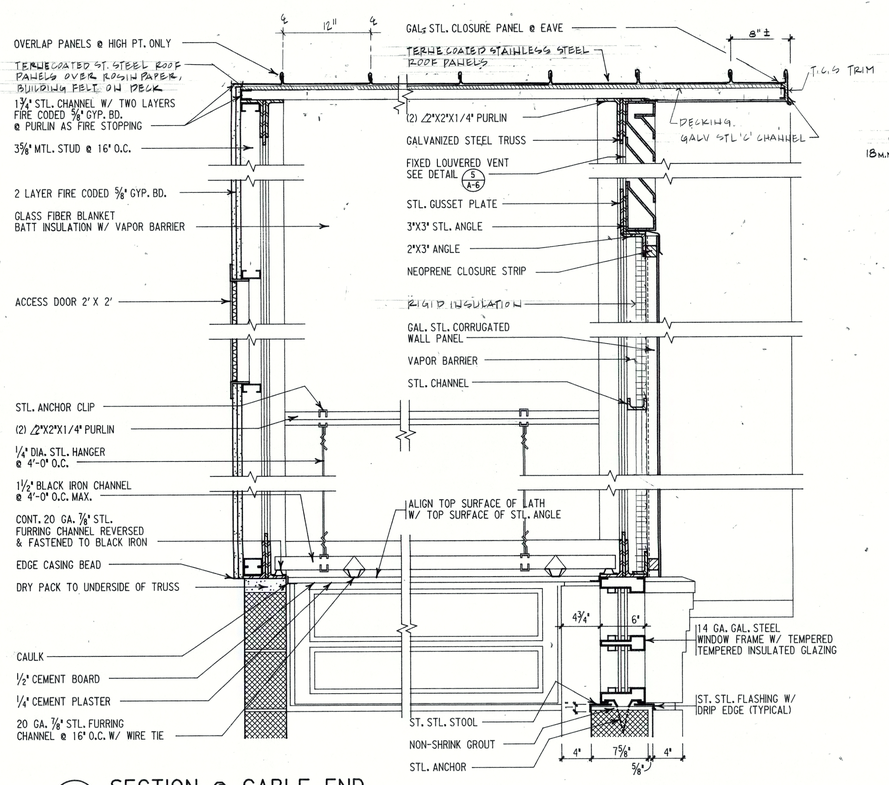

5 SECTION @ GABLE END

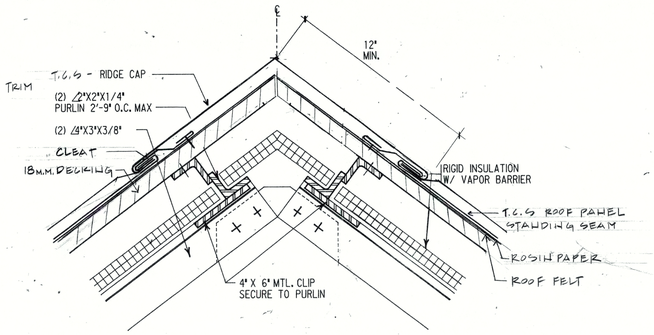

6 A-4 SECT. @ RIDGE CAP DTL.

SCALE: 3"=1'-0"

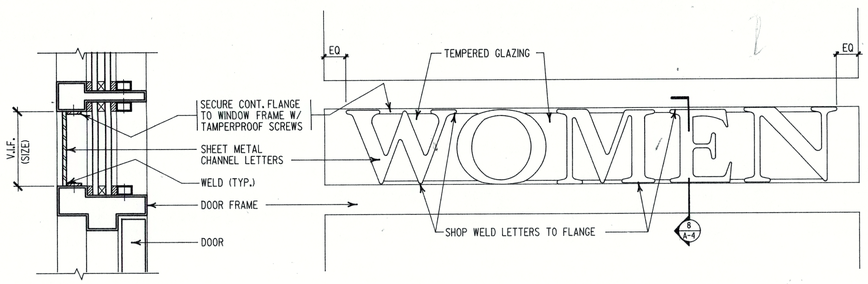

8 A-4 SECTION ABOVE DOOR

7 A-4 ELEVATION OF SIGNAGE

SCALE: 3"=1'-0"

CITY OF NEW YORK
PARKS & RECREATION
Olmsted Center
Flushing Meadows Corona Park
Flushing, New York 11368

PROJECT TITLE: THE CONSTRUCTION OF A COMFORT STATION IN EAST RIVER PARK LOCATED OPP. EAST 10TH. STREET & THE F.D.R. DRIVE BOROUGH OF MANHATTAN

DRAWING TITLE: WALL SECTIONS

DATE 3.30.94	ARCHITECT OF RECORD S. ROSENTHAL	DESIGNED BY S.R./M.K.
	DRAWN BY CADD (B.B.M)	SCALE AS NOTED
	CHECKED BY M. KNIGHT	CONTRACT NO. M144-194
	APPROVED BY DIRECTOR S. ROSENTHAL	SHEET NO. A-4 SHEETS

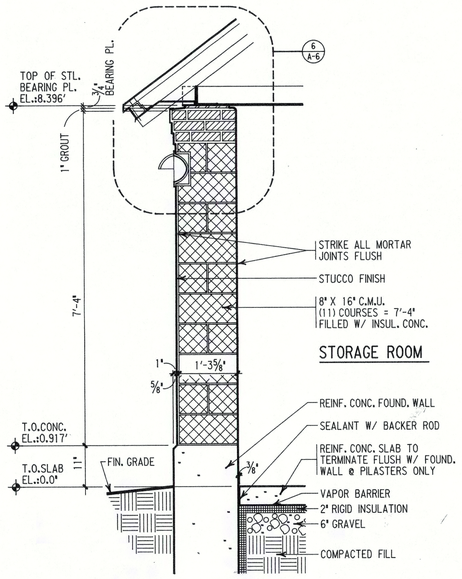

1 A-4 SECTION @ PILASTER

SCALE: 3/4"=1'-0"

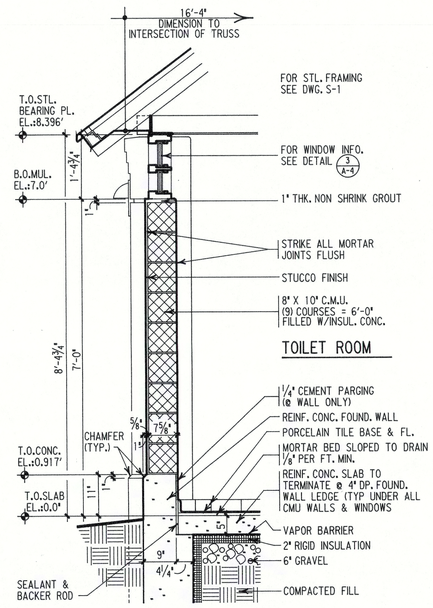

2 A-4 SECTION @ WINDOW

SCALE: 3/4"=1'-0"

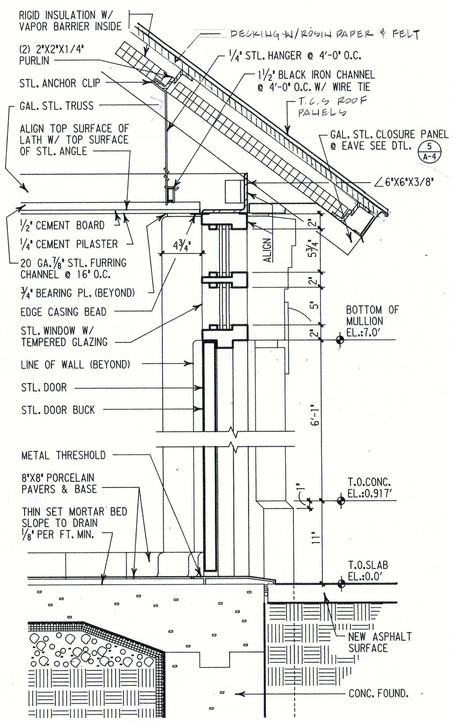

3 A-4 SECTION @ TOILET DOOR

SCALE: 1 1/2"=1'-0"

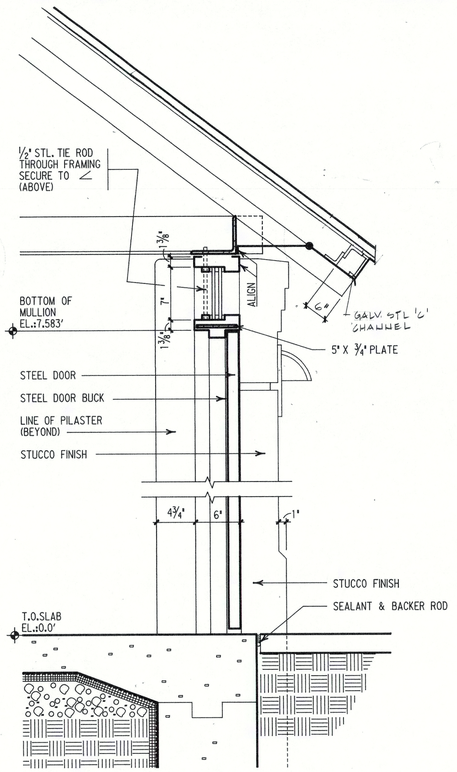

4 A-4 SECTION @ STOR. RM. DOOR

SCALE: 1 1/2"=1'-0"

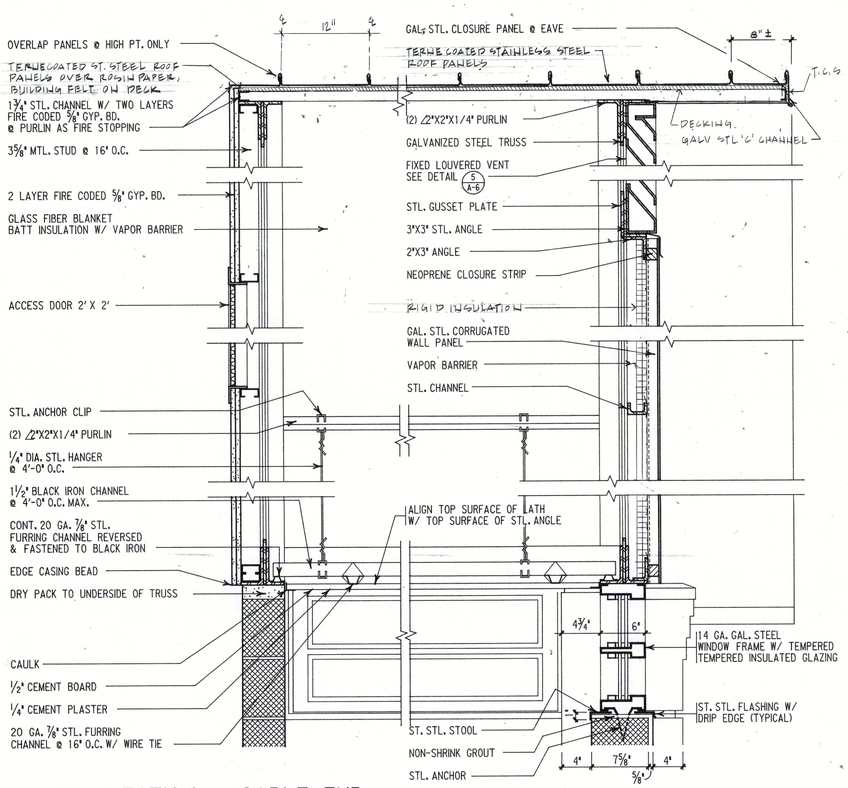

5 A-4 SECTION @ GABLE END

SCALE: 1 1/2"=1'-0"

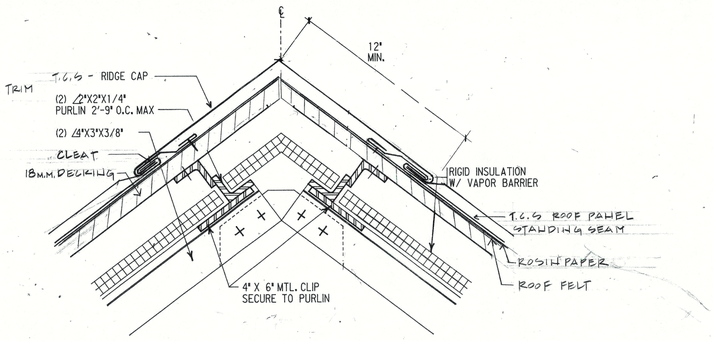

6 A-4 SECT. @ RIDGE CAP DTL.

SCALE: 3"=1'-0"

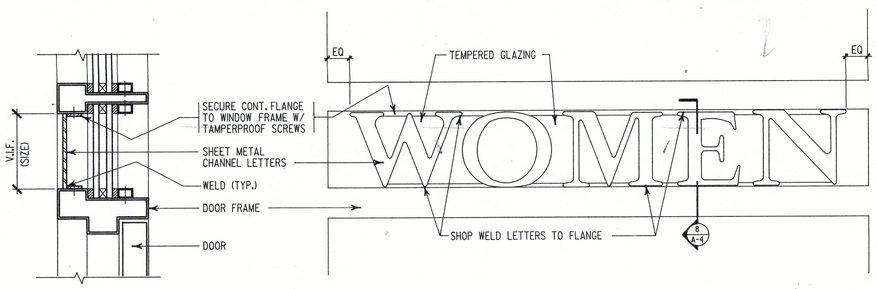

8 A-4 SECTION ABOVE DOOR

SCALE: 3"=1'-0"

7 A-4 ELEVATION OF SIGNAGE

SCALE: 3"=1'-0"

CITY OF NEW YORK
PARKS & RECREATION
Olmsted Center
Flushing Meadows Corona Park
Flushing, New York 11368

PROJECT TITLE: THE CONSTRUCTION OF A COMFORT STATION IN EAST RIVER PARK LOCATED OFF. EAST 10TH. STREET & THE F.D.R. DRIVE BOROUGH OF MANHATTAN

DRAWING TITLE: WALL SECTIONS

DATE 3.30.94	ARCHITECT OF RECORD S.ROSENTHAL	DESIGNED BY S.R./M.K.
	DRAWN BY CADD (B.B.M)	SCALE AS NOTED
	CHECKED BY M. KNIGHT	CONTRACT NO. M144-194
	APPROVED BY DIRECTOR S. ROSENTHAL	SHEET NO. A-4 SHEETS
	APPROVED BY CHIEF OF DESIGN G. GEIERSBACH	9 OF 22

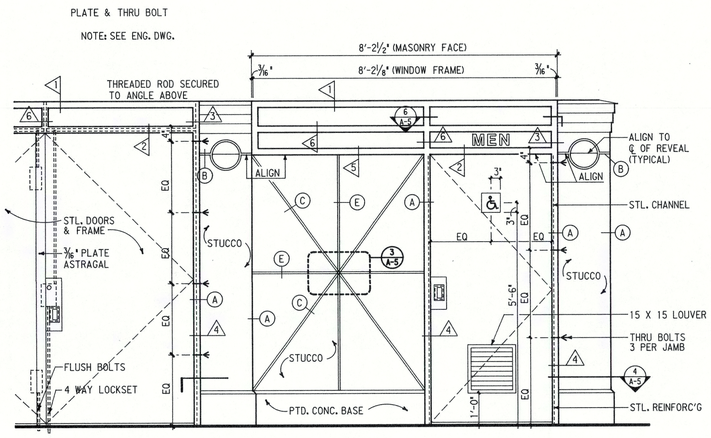

1 A-5 PARTIAL ELEVATION
SCALE: 1½"=1'-0"

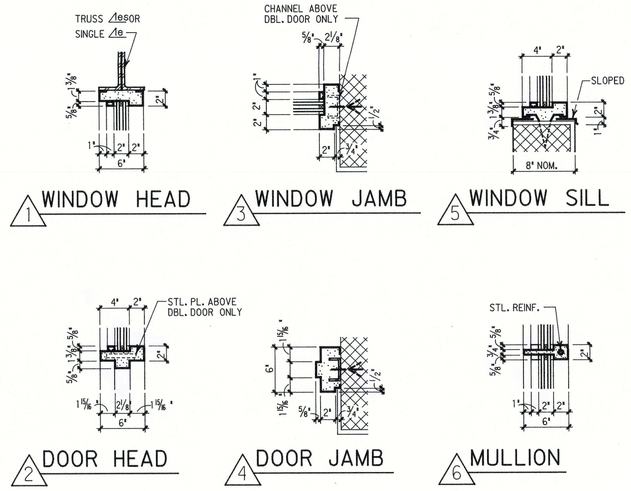

2 A-5 DOOR & WINDOW FRAME DETAILS
SCALE: 1½"=1'-0"

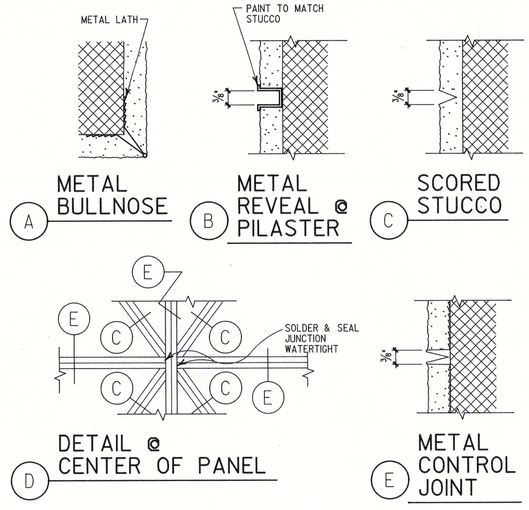

3 A-5 STUCCO FINISH DETAILS
SCALE: HALF SIZE

STORAGE RM.

MEN'S TOILET

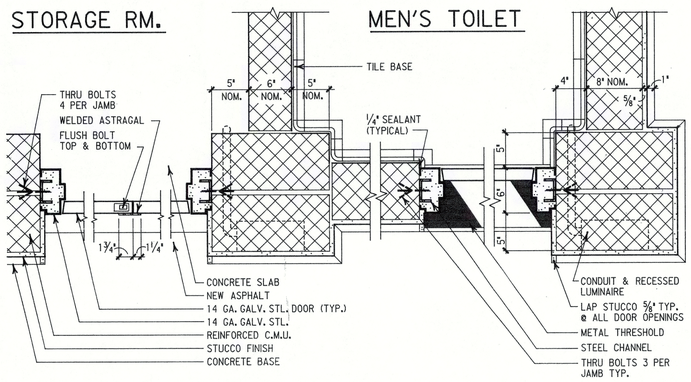

4 A-5 DOOR JAMB / PLAN DETAIL
SCALE: 1½"=1'-0"

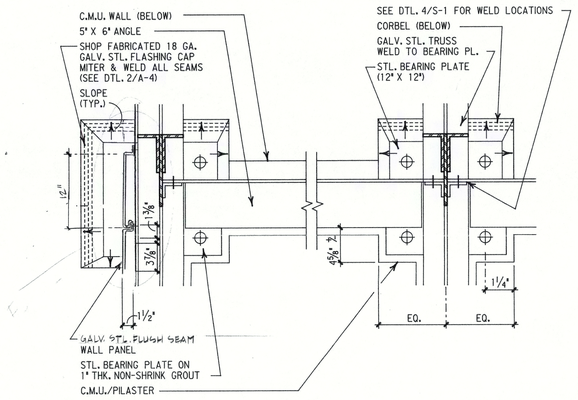

5 A-5 PLAN DETAIL @ TOP OF PILASTER
SCALE: 1½"=1'-0"

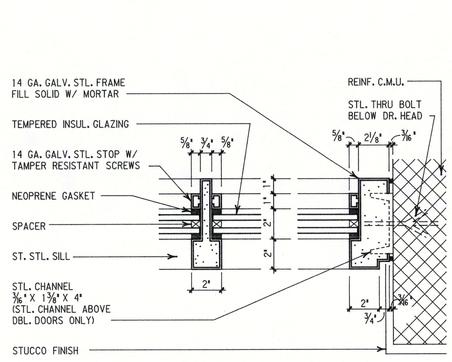

6 A-5 TYPICAL WINDOW JAMB
SCALE: 3"=1'-0"

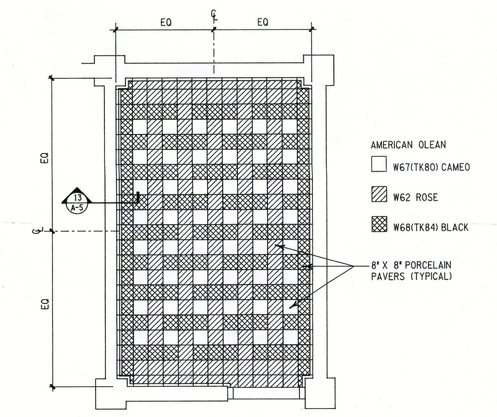

7 A-5 FLOOR TILE PATTERN @ TOILET RMS.
SCALE: ⅜"=1'-0"

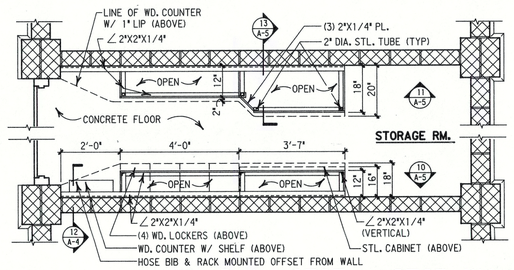

8 A-5 PLAN SECT. @ STOR. RM.
SCALE: ½"=1'-0"

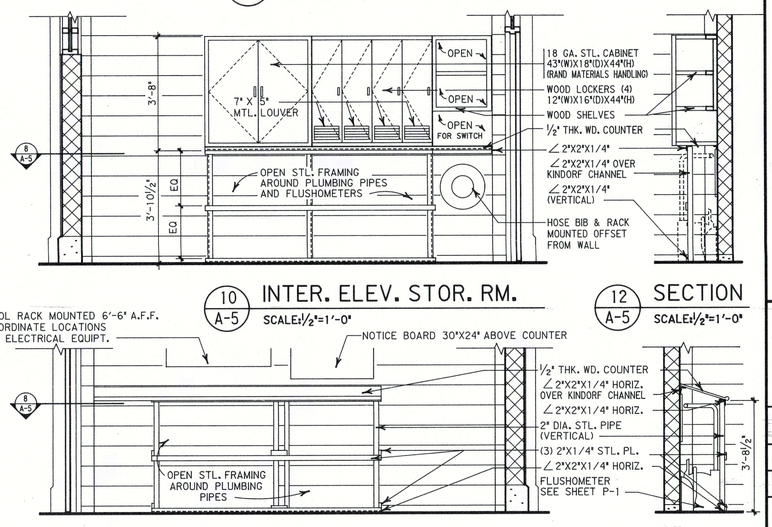

10 A-5 INTER. ELEV. STOR. RM.
SCALE: ½"=1'-0"

12 A-5 SECTION
SCALE: ½"=1'-0"

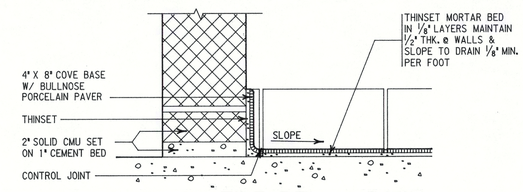

9 A-5 TILE DTL. @ BASE
SCALE: 3"=1'-0"

11 A-5 INTER. ELEV. STOR. RM.
SCALE: ½"=1'-0"

13 A-5 SECTION
SCALE: ½"=1'-0"

CITY OF NEW YORK
PARKS & RECREATION
Olmsted Center
Flushing Meadows Corona Park
Flushing, New York 11368

PROJECT TITLE: THE CONSTRUCTION OF A COMFORT STATION IN EAST RIVER PARK, LOCATED OPP. EAST 10TH STREET & THE F.D.R. DRIVE, BOROUGH OF MANHATTAN

DRAWING TITLE: DOOR & WINDOW DETAILS

DATE 3.30.94	ARCHITECT OF RECORD S. ROSENTHAL	DESIGNED BY S.R/M.K.
	DRAWN BY CADD (B.B.M)	SCALE AS NOTED
	CHECKED BY M. KNIGHT	CONTRACT NO. M144-194
	APPROVED BY DIRECTOR S. ROSENTHAL	SHEET NO. A-5 SHEETS
	APPROVED BY CHIEF OF DESIGN G. GEIERBACH	10 OF 22

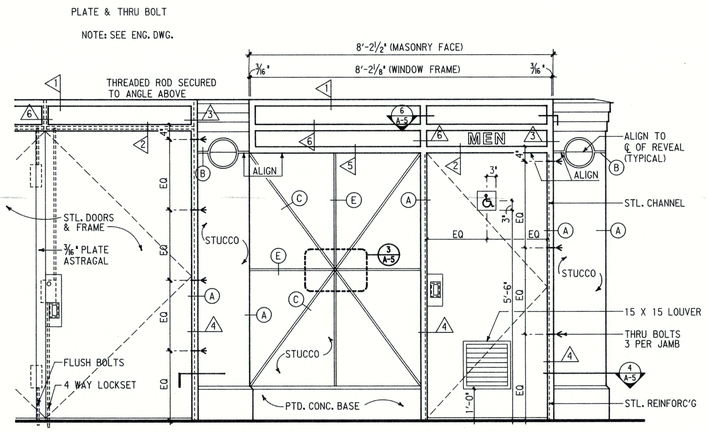

1 A-5 PARTIAL ELEVATION

SCALE: 1½"=1'-0"

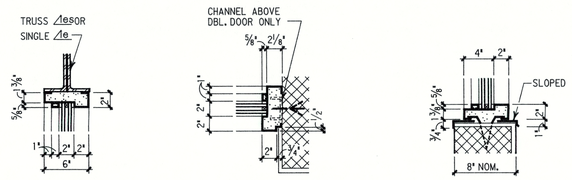

1 WINDOW HEAD

3 WINDOW JAMB

5 WINDOW SILL

2 DOOR HEAD

4 DOOR JAMB

6 MULLION

2 A-5 DOOR & WINDOW FRAME DETAILS

SCALE: 1½"=1'-0"

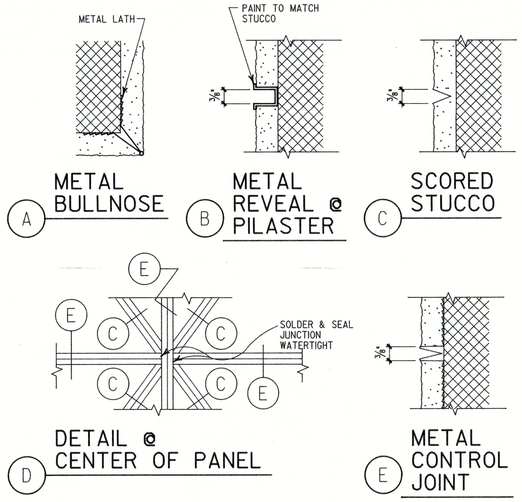

A METAL BULLNOSE

B METAL REVEAL @ PILASTER

C SCORED STUCCO

D DETAIL @ CENTER OF PANEL

E METAL CONTROL JOINT

3 A-5 STUCCO FINISH DETAILS

SCALE: HALF SIZE

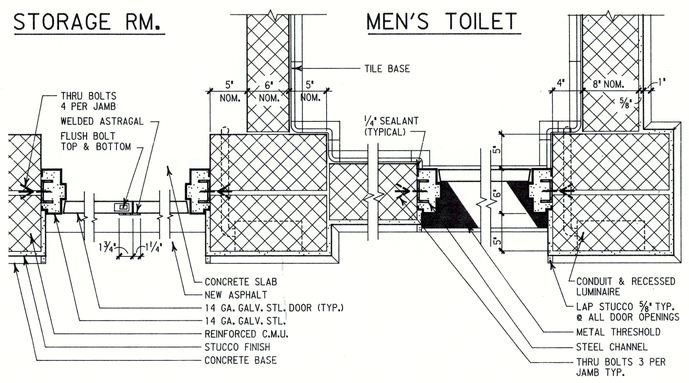

4 A-5 DOOR JAMB / PLAN DETAIL

SCALE: 1½"=1'-0"

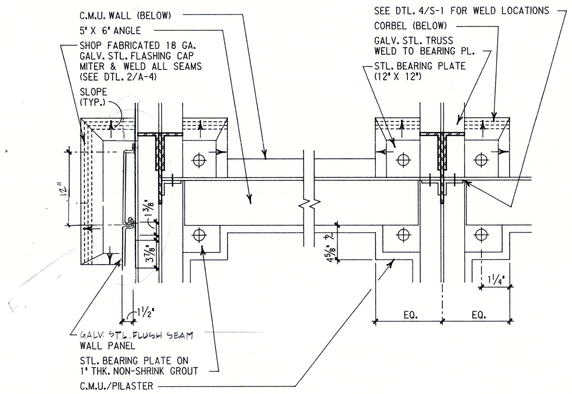

5 A-5 PLAN DETAIL @ TOP OF PILASTER

SCALE: 1½"=1'-0"

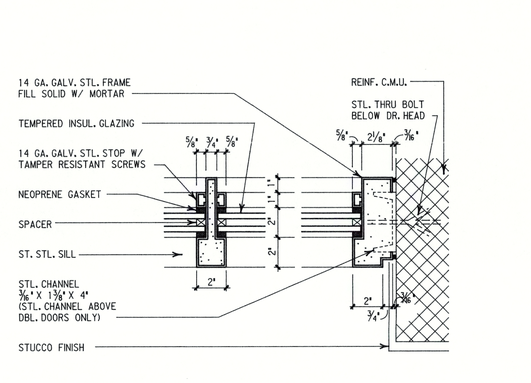

6 A-5 TYPICAL WINDOW JAMB

SCALE: 3"=1'-0"

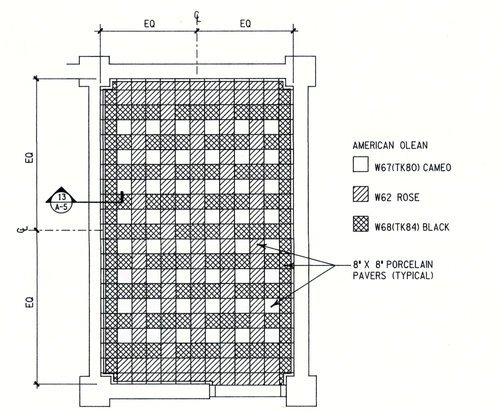

7 A-5 FLOOR TILE PATTERN @ TOILET RMS.

SCALE: 3/4"=1'-0"

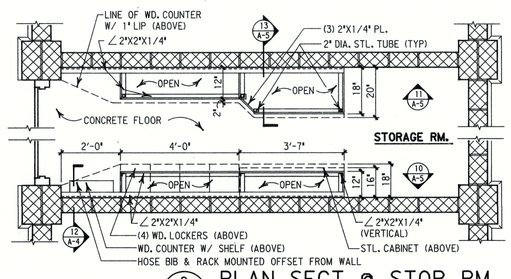

8 A-5 PLAN SECT. @ STOR. RM.

SCALE: 1½"=1'-0"

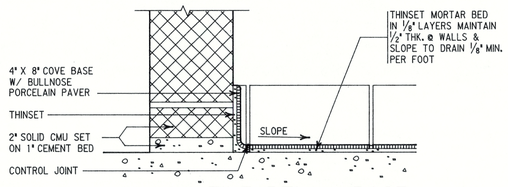

9 A-5 TILE DTL. @ BASE

SCALE: 3"=1'-0"

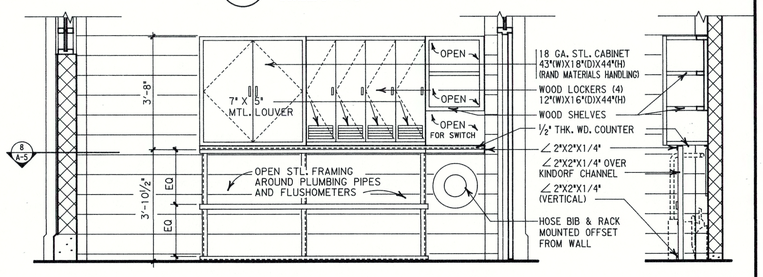

10 A-5 INTER. ELEV. STOR. RM.

SCALE: 1½"=1'-0"

12 A-5 SECTION

SCALE: 1½"=1'-0"

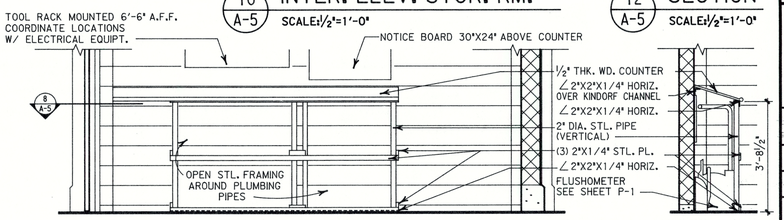

11 A-5 INTER. ELEV. STOR. RM.

SCALE: 1½"=1'-0"

13 A-5 SECTION

SCALE: 1½"=1'-0"

CITY OF NEW YORK
PARKS & RECREATION
Olmsted Center
Flushing Meadows Corona Park
Flushing, New York 11368

PROJECT TITLE THE CONSTRUCTION OF A COMFORT STATION IN EAST RIVER PARK, LOCATED OFF EAST 19TH STREET & THE F.D.R. DRIVE, BOROUGH OF MANHATTAN

DRAWING TITLE DOOR & WINDOW DETAILS

DATE 3.30.94	ARCHITECT OF RECORD S. ROSENTHAL	DESIGNED BY S.R/M.K.
	DRAWN BY CADD (B.B.M)	SCALE AS NOTED
	CHECKED BY M. KNIGHT	CONTRACT NO. M144-194
	APPROVED BY DIRECTOR S. ROSENTHAL	SHEET NO. A-5 SHEETS

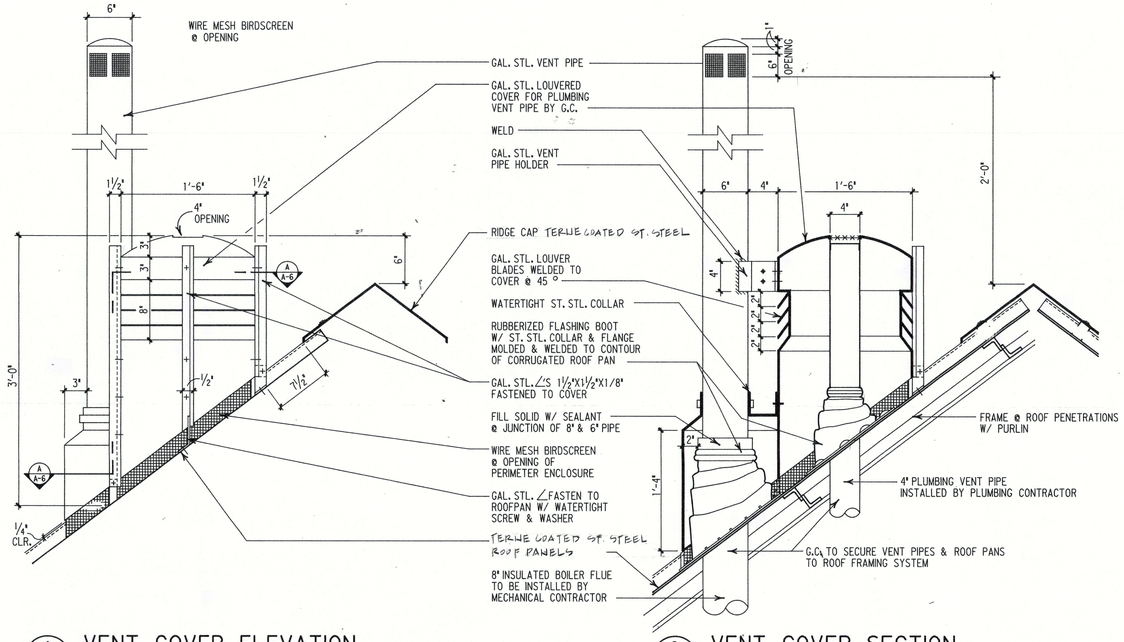

1 A-6 VENT COVER ELEVATION
SCALE: 1½"=1'-0"

2 A-6 VENT COVER SECTION
SCALE: 1½"=1'-0"

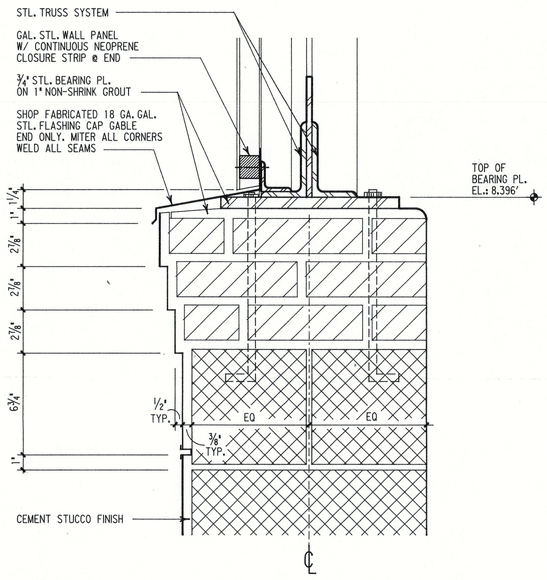

3 A-6 SECTION THRU PILASTER @ GABLE END
SCALE: 3"=1'-0"

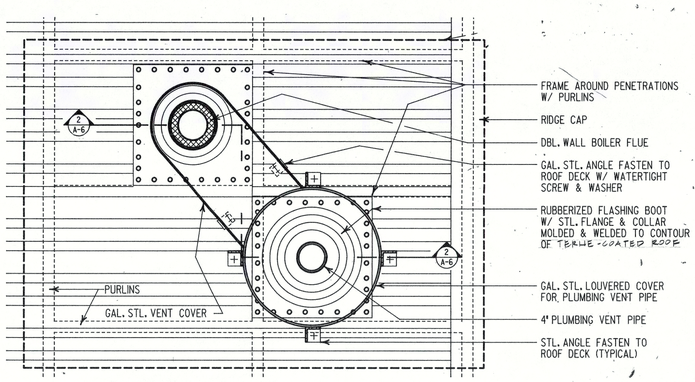

A A-6 VENT COVER PLAN DETAIL
SCALE: 1½"=1'-0"

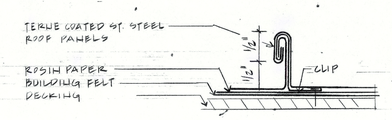

7 A-6 STANDING SEAM
N.T.S.

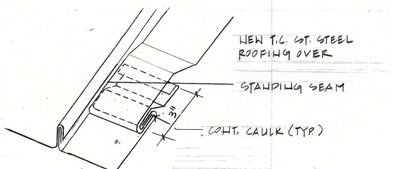

8 A-6 TRANSVERSE SEAM
NTS

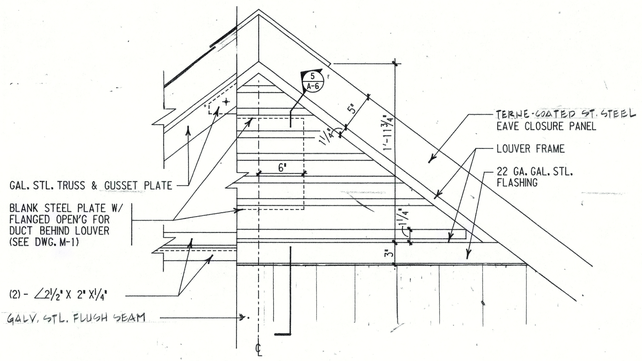

4 A-6 TYPICAL ELEVATION @ EAVE
SCALE: 1½"=1'-0"

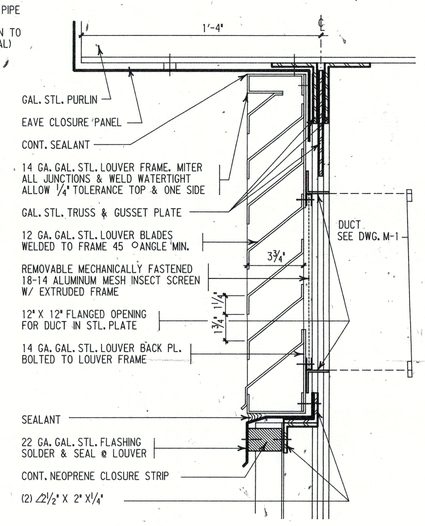

5 A-6 LOUVER DETAIL
SCALE: 3"=1'-0"

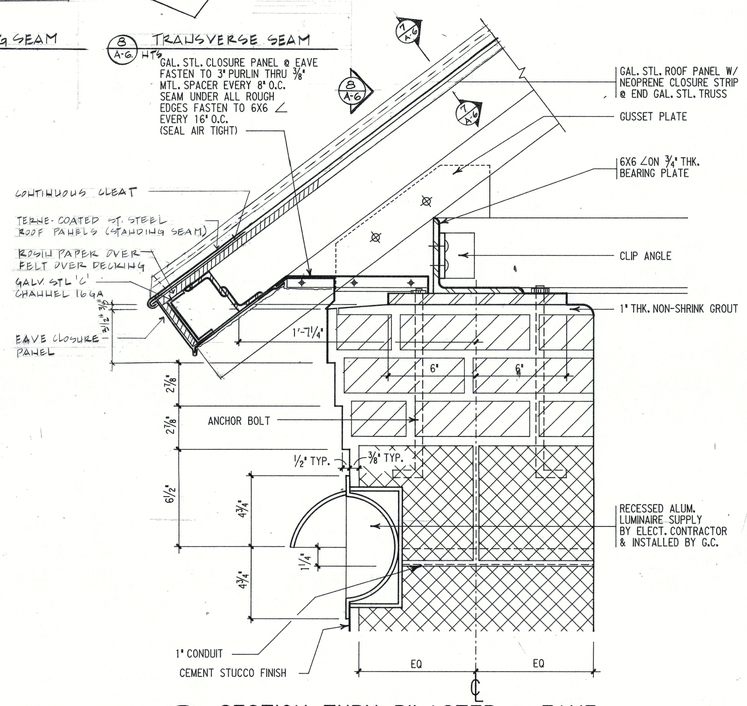

6 A-6 SECTION THRU. PILASTER @ EAVE
SCALE: 3"=1'-0"

CITY OF NEW YORK
PARKS & RECREATION
Olmsted Center
Flushing Meadows Corona Park
Flushing, New York 11368

PROJECT TITLE: THE CONSTRUCTION OF A COMFORT STATION IN EAST RIVER PARK LOCATED OPPOSITE EAST 10TH STREET & THE F.D.R. DRIVE - BOROUGH OF MANHATTAN

DRAWING TITLE: MISCELLANEOUS DETAILS

DATE 3.30.94	ARCHITECT OF RECORD S. ROSENTHAL	DESIGNED BY S.R./M.K.
	DRAWN BY CADD (B.B.M)	SCALE AS NOTED
	CHECKED BY M. KNIGHT	CONTRACT NO. M144-194
	APPROVED BY DIRECTOR S. ROSENTHAL	SHEET NO. A-6 SHEETS
	APPROVED BY CHIEF OF DESIGN G. GEIERBACH	11 OF 22

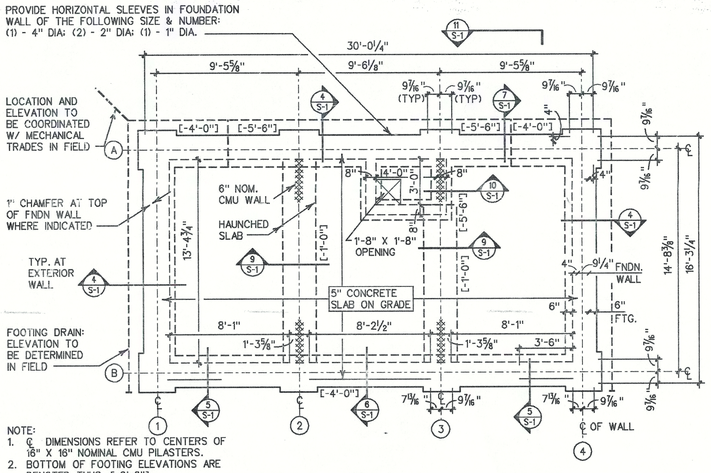

NOTE:
1. ℄ DIMENSIONS REFER TO CENTERS OF 16" X 16" NOMINAL CMU PILASTERS.
2. BOTTOM OF FOOTING ELEVATIONS ARE DENOTED THUS: [-0'-0"].

1/S-1 FOUNDATION PLAN
SCALE: 1/4"=1'-0"

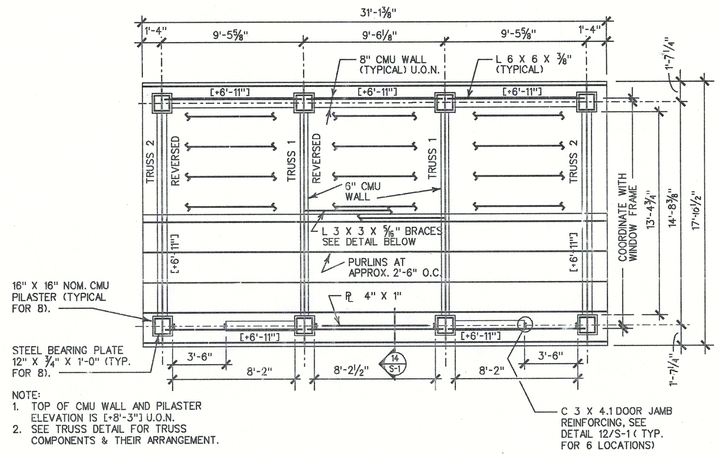

NOTE:
1. TOP OF CMU WALL AND PILASTER ELEVATION IS [+8'-3"] U.O.N.
2. SEE TRUSS DETAIL FOR TRUSS COMPONENTS & THEIR ARRANGEMENT.

2/S-1 ROOF FRAMING PLAN
SCALE: 1/4"=1'-0"

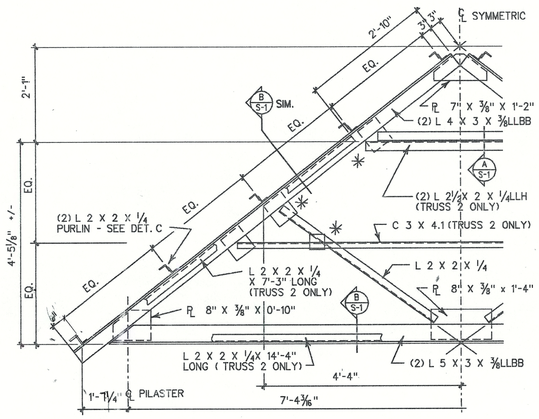

NOTE:
1. ALL GUSSET PLATES SHALL BE OF 3/8" STOCK, OF SIZE REQUIRED U.O.N.
2. WELD GUSSET PLATES TO FRAMING MEMBERS W/ 1/4" FILLET ALL AROUND, EXCEPT WHERE BOLTING IS INDICATED.
3. WHERE BOLTING IS INDICATED, PROVIDE VERTICALLY SLOTTED HOLES IN THE FRAMING MEMBERS AND HORIZONTAL SLOTTED HOLES IN THE GUSSET PLATE FOR CONNECTIONS MARKED ✳

3/S-1 TRUSS DETAIL
SCALE: 1/4"=1'-0"

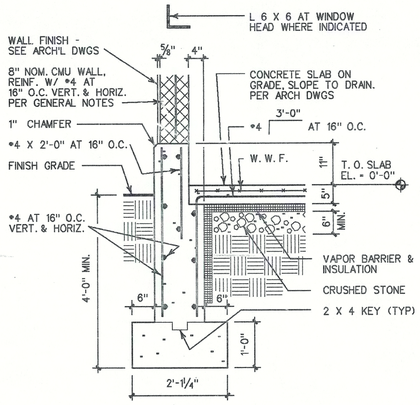

4/S-1 SECTION
SCALE: 3/4"=1'-0"

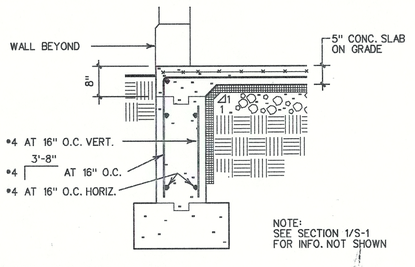

NOTE: SEE SECTION 1/S-1 FOR INFO. NOT SHOWN

5/S-1 SECTION
SCALE: 3/4"=1'-0"

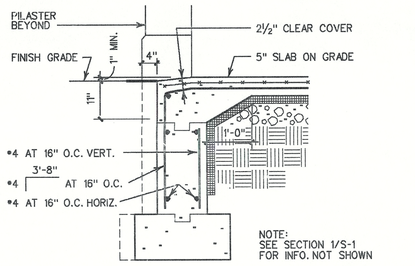

NOTE: SEE SECTION 1/S-1 FOR INFO. NOT SHOWN

6/S-1 SECTION
SCALE: 3/4"=1'-0"

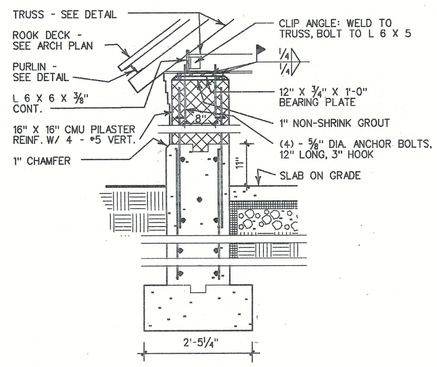

7/S-1 SECTION
SCALE: 3/4"=1'-0"

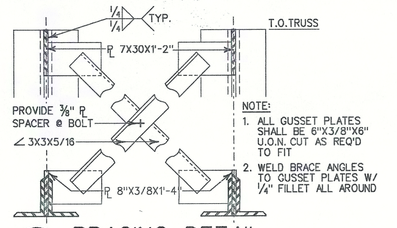

8/S-1 BRACING DETAIL
NOT TO SCALE

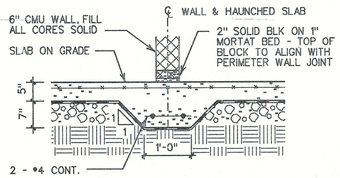

9/S-1 SECTION
SCALE: 3/4"=1'-0"

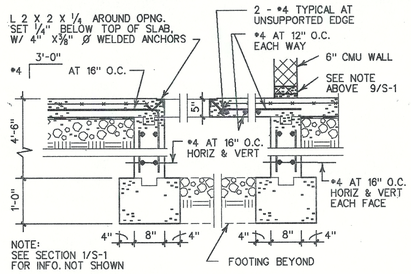

NOTE: SEE SECTION 1/S-1 FOR INFO. NOT SHOWN

10/S-1 SECTION
SCALE: 3/4"=1'-0"

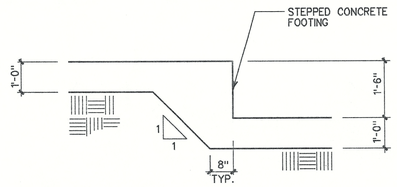

11/S-1 DETAIL
SCALE: 1/2"=1'-0"

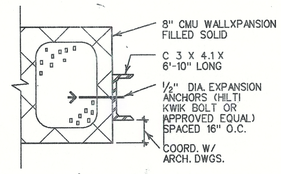

12/S-1 DETAIL
N.T.S.

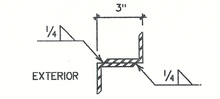

A/S-1 DETAIL
SCALE: 3" =1'-0"

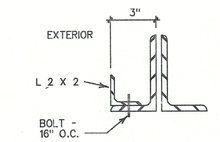

B/S-1 DETAIL
SCALE: 3" =1'-0"

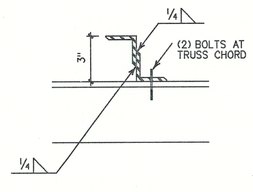

C/S-1 DETAIL
SCALE: 3" =1'-0"

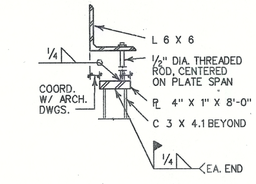

14/S-1 DETAIL
N.T.S.

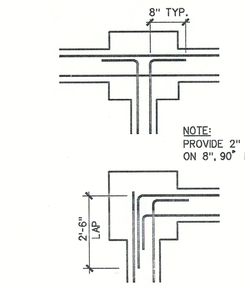

13/S-1 DETAILS
FOR HORIZONTAL REINFORCEMENT @ FOUNDATION WALL INTERSECTIONS
NOT TO SCALE

STRUCTURAL NOTES:

•ROOF CONCENTRATED LIVE LOAD SHOULD BE 250 LBS. ON AN AREA OF 2'-0" X 2'-0".

1. CONTRACTOR SHALL PROVIDE TEMPORARY SHORING AND BRACING AND MAKE SAFE ALL FLOORS, ROOFS, WALLS AND ADJACENT PROPERTY AS PROJECT CONDITIONS REQUIRE.
2. ALL FOOTINGS SHALL REST ON UNDISTURBED SOIL OF MINIMUM BEARING CAPACITY EQUAL TO 2000 PSF. BOTTOM OF FOOTING ELEVATIONS SHALL BE ADJUSTED AS REQUIRED IN THE FIELD.
3. ALL CONCRETE SHALL BE NORMAL WEIGHT AGGREGATE AND AIR ENTRAINED OF MINIMUM COMPRESSIVE STRENGTH EQUAL TO 4000 PSI AT ACE 28 DAYS. CONCRETE WORK SHALL CONFORM TO ACI 301, "SPECIFICATIONS FOR CONCRETE FOR BUILDINGS", AND ALL RECOMMENDED PRACTICES CONTAINED THEREIN SHALL BE CONSIDERED MANDATORY FOR THIS PROJECT.
4. REINFORCING STEEL SHALL BE DEFORMED BARS CONFORMING TO ASTM A615, GRADE 60.
5. WELDED WIRE FABRIC (WWF) SHALL CONFORM TO ASTM A185.
6. SLAB ON GRADE SHALL BE 5" CONCRETE REINFORCED WITH 6 X 6 W2.0 X W2.0 WWF ON 10 MIL. POLY. VAPOR BARRIER ON 6" CRUSHED STONE.
7. CONCRETE MASONRY UNITS SHALL BE HOLLOW, LOAD BEARING UNITS CONFORMING TO ASTM C90, GRADE N. FILL ALL VOIDS SOLID WITH LIGHT WEIGHT AGGREGATE CONCRETE (ASTM C-330, SOLITE OR APPROVED EQUAL) OF MIN. COMP. STRENGTH: 3000 PSI AT 28 DAYS. MORTAR SHALL BE ASTM C270, TYPE S. WORKMANSHIP SHALL CONFORM TO NCMA SPECIFICATIONS FOR CONCRETE MASONRY.
8. STRUCTURAL STEEL: ALL PLATES AND SHAPES SHALL BE ASTM A36. ALL PIPES SHALL BE ASTM A53, TYPE E OR S, GRADE B. STRUCTURAL STEEL SHALL CONFORM TO THE AISC "SPECIFICATIONS FOR THE DESIGN, FABRICATION AND ERECTION OF STRUCTURAL STEEL FOR BUILDINGS", NOVEMBER 1, 1978.
9. BOLTS SHALL BE A307, 3/4" DIA. MINIMUM, U.O.N.
10. WELDING ELECTRODES SHALL BE ASTM A233, CLASS 370XX.
11. CONTROLLED INSPECTIONS REQUIRED BY THE NEW YORK CITY BUILDING CODE SHALL BE PERFORMED BY A TESTING AGENCY PROVIDED BY THE OWNER, FOR THE FOLLOWING:
    A. QUALITY CONTROL OF CONCRETE MATERIALS, BATCHING, STRENGTH, SLUMP, AIR CONTENT, UNIT WEIGHT, TEMPERATURE, FORMS, SIZE AND PLACEMENT OF REINFORCEMENT.
    B. WELDING.
    C. HIGH-STRENGTH BOLTING.
    D. SUBGRADE FOR FOUNDATIONS.
12. REINFORCE ALL CMU WALLS WITH LADDER TYPE HORIZONTAL REINFORCING SPACE AT 16" O.C. VERTICALLY AND NOT MORE THAN 8" FROM TOP OF WALL.

CITY OF NEW YORK
PARKS & RECREATION
Olmsted Center
Flushing Meadows Corona Park
Flushing, New York 11368

PROJECT TITLE	THE CONSTRUCTION OF A COMFORT STATION IN EAST RIVER PARK LOCATED OPPOSITE EAST 10TH STREET & THE F.D.R. DRIVE - BOROUGH OF MANHATTAN
DRAWING TITLE	PLANS - SECTIONS - GENERAL NOTES
DATE 3.30.94	ARCHITECT OF RECORD S. ROSENTHAL — DESIGNED BY S.R./M.K.
	DRAWN BY GADD (B.B.M.) — SCALE AS NOTED
	CHECKED BY M. KNIGHT — CONTRACT NO. M144-194
	APPROVED BY DIRECTOR S. ROSENTHAL — SHEET NO. S-1 SHEETS 12 OF 22
	APPROVED BY CHIEF OF DESIGN G. GEIERSBACH

CITY OF NEW YORK
DEPARTMENT OF DESIGN AND CONSTRUCTION
DIVISION OF INFRASTRUCTURE

ADDENDA CONTROL SHEET

BID SUBMISSION DATE / TIME: **February 8, 2021, 8:30 AM – 11:00 AM**
BID OPENING DATE: **February 8, 2021**

PROJECT NO.: **SANDRESM1**

DESCRIPTION: **INSTALLATION OF EAST SIDE COASTAL RESILIENCY FROM MONTGOMERY STREET TO EAST 15TH STREET**

Addendum		Addendum Contains:					
No.	Date	Revised Bid Date/Time	Revised Bid Schedule	Questions & Responses	Additional Amendments	Drawings (number)	General Counsel Approval
1	12/28/2020	☐	☐	☐	☒	☐ (0)	
2	12/31/2020	☐	☐	☐	☒	☒ (88)	
3		☐	☐	☐	☐	☐ (0)	
4		☐	☐	☐	☐	☐ (0)	
5		☐	☐	☐	☐	☐ (0)	
6		☐	☐	☐	☐	☐ (0)	
7		☐	☐	☐	☐	☐ (0)	
8		☐	☐	☐	☐	☐ (0)	
		☐	☐	☐	☐	☐ (0)	
		☐	☐	☐	☐	☐ (0)	
		☐	☐	☐	☐	☐ (0)	
		☐	☐	☐	☐	☐ (0)	

The Table above is a guide. Refer to the referenced Addendum for specific information.

ATTACH TO CONTRACT DOCUMENTS
THE CITY OF NEW YORK

DEPARTMENT OF DESIGN AND CONSTRUCTION
INFRASTRUCTURE DIVISION
BUREAU OF DESIGN

PROJECT ID: SANDRESM1

INSTALLATION OF EAST SIDE COASTAL RESILIENCY FROM MONTGOMERY STREET TO EAST 15TH STREET TOGETHER WITH ALL WORK INCIDENTAL THERETO

BOROUGH OF MANHATTAN

ADDENDUM NO. 2

DATED: 12/31/2020

THIS ADDENDUM IS HEREBY MADE A PART OF THE CONTRACT DOCUMENTS

1. **Refer** to Volume 1;
   Incorporate the attached revised pages as detailed in Attachment A.
   [Number of attachments: 1 attachment and 4 pages of Bid Booklet]

2. **Refer** to Volume 3;
   Incorporate the attached revised specifications as detailed in Attachment C.
   [Number of attachments: 1 attachment and 1 page of specifications]

3. **Refer** to the list of the Drawings in Attachment D;
   Incorporate the revised drawings notes as detailed in Attachment D.
   Replace the contract drawing marked with status "Replacement" in the attached drawings list;
   [Number of attachments: 1 attachment; Number of drawings: 88]

Note the convention for SANDRESM1 Addenda. Not all Addenda will have all attachments.

Attachment A – Non-Bid Schedule Changes to Volume 1
Attachment B – Changes to Bid Schedule (Volume 1)
Attachment C – Changes to Specifications (Volumes 2 and 3)
Attachment D – Changes to Drawings

END OF ADDENDUM NO. 2

By signing in the space provided below, the bidder acknowledges receipt of this Addendum consisting of one (1) page and NINETY- SIX (96) pages of attachments.

THIS ADDENDUM MUST BE SIGNED BY ALL BIDDERS AND ATTACHED TO THEIR BID

Richard Jones, P.E. CWI CDT
Executive Director

IPC Resiliency Partners
Name of Bidder

By:

Attachment A - Revisions to Bid Booklet

	Refer to These Parts of Contract Books		Changes		Description of Changes
#	Volume	Section	Remove Page(s)	Insert Page(s)	
1	1	Notice To Bidders	N/A	viiiR	DOT Notice To Bidders added
2	1	Table of Contents	viii to ix	ixR to xR	Table of Contents Updated
3	1	Contract Drawings	C-99	C-99R	EP7 GAS CAPITAL PLAN Added to Chart MILESTONE DRAWINGS Removed from Chart
4					

The descriptions above are only a guide. The actual text of the revised page governs.

Attachment C - Revisions to Specifications

	Refer to These Parts of the Contract Books			Changes		Description of Changes
#	Volume	Package	Section	Remove Page(s)	Insert Page(s)	
1	3	S-Pages	GENERAL SPECIAL PROVISIONS	S-8	S-8R	Changes marked in the right border, and include: General Requirements Applicable to Insurance Policies part (c) Updated
2						
3						
4						
5						
6						
7						
8						

The descriptions above are only a guide. The actual text of the specifications governs.

Addendum 2 Drawings List - Attachment D

Package	New or Replacement
Phasing Drawings PH001-PH0021	New
NYC Parks Standard Details	New

Sheet	New or Replacement
EP7 Gas Capital Plan	New
G018	Replacement

CITY OF NEW YORK
DEPARTMENT OF DESIGN AND CONSTRUCTION
DIVISION OF INFRASTRUCTURE

ADDENDA CONTROL SHEET

BID SUBMISSION DATE / TIME: **February 8, 2021, 8:30 AM – 11:00 AM**
BID OPENING DATE/ TIME: **February 8, 2021, 11:30 AM**

PROJECT NO.: **SANDRESM1**

DESCRIPTION: **INSTALLATION OF EAST SIDE COASTAL RESILIENCY FROM MONTGOMERY STREET TO EAST 15TH STREET**

Addendum		Addendum Contains:					
No.	Date	Revised Bid Date/Time	Revised Bid Schedule	Questions & Responses	Additional Amendments	Drawings (number)	General Counsel Approval
1	12/28/2020	☐	☐	☐	☒	☐ (0)	
2	12/31/2020	☐	☐	☐	☒	☒ (88)	
3	1/11/2021	☐	☐	☐	☒	☐ (0)	
4		☐	☐	☐	☐	☐ (0)	
5		☐	☐	☐	☐	☐ (0)	
6		☐	☐	☐	☐	☐ (0)	
7		☐	☐	☐	☐	☐ (0)	
8		☐	☐	☐	☐	☒ (0)	
		☐	☐	☐	☐	☐ (0)	
		☐	☐	☐	☐	☐ (0)	
		☐	☐	☐	☐	☐ (0)	
		☐	☐	☐	☐	☐ (0)	

The Table above is a guide. Refer to the referenced Addendum for specific information.

ATTACH TO CONTRACT DOCUMENTS
THE CITY OF NEW YORK

DEPARTMENT OF DESIGN AND CONSTRUCTION
INFRASTRUCTURE DIVISION
BUREAU OF DESIGN

PROJECT ID: SANDRESM1

INSTALLATION OF EAST SIDE COASTAL RESILIENCY FROM MONTGOMERY STREET TO EAST 15TH STREET TOGETHER WITH ALL WORK INCIDENTAL THERETO

BOROUGH OF MANHATTAN

ADDENDUM NO. 3

DATED: 1/11/2021
THIS ADDENDUM IS HEREBY MADE A PART OF THE CONTRACT DOCUMENTS

1. **Refer** to Volume 3;
   Incorporate the attached revised specifications as detailed in Attachment C.
   [Number of attachments: 1 attachment and 1376 page of specifications]

2. The attendance sheet and the presentation from the Pre-Bid Conference held on 1/4/2021 are attached. Please note that the presentation is for informational purposes; should any inconsistences exist between the presentation and the Contract Documents; the Contract Documents will prevail.
   [Number of attachments: 2 pages of attendance sheet and 36 pages of presentation.]

Note the convention for SANDRESM1 Addenda. Not all Addenda will have all attachments.
Attachment A – Non-Bid Schedule Changes to Volume 1
Attachment B – Changes to Bid Schedule (Volume 1)
Attachment C – Changes to Specifications (Volumes 2 and 3)
Attachment D – Changes to Drawings

END OF ADDENDUM NO. 3

By signing in the space provided below, the bidder acknowledges receipt of this Addendum consisting of one (1) page and One Thousand Four Hundred Fifteen (1415) pages of attachments.

THIS ADDENDUM MUST BE SIGNED BY ALL BIDDERS AND ATTACHED TO THEIR BID

Richard Jones, P.E. CWI CDT
Executive Director

IPC Resiliency Partners
Name of Bidder

By:

Attachment C - Revisions to Specifications

	Refer to These Parts of the Contract Books			Changes		Description of Changes
#	Volume	Package	Section	Remove Page(s)	Insert Page(s)	
1	3	S-Pages	B9. Reference Documents	N/A	N/A	**Disregard:** the original SWPPP **Replace:** with the updated SWPPP
2	3	Floodwall Pages	ESCR-61 – Williamsburg Bridge Security Features	FW-140	FW-140R	Changes marked in the right border, and include: Concrete Strength Updated
3						
4						
5						
6						
7						
8						

The descriptions above are only a guide. The actual text of the specifications governs.

SANDRESM1 Attendance List for 1/4/21 Zoom Pre-Bid Conference

Name	Email Address	Phone Number	Company	Is your firm an M/WBE?	Your firm is intending to be a:
Mike Prigge	priggem@liro.com	8455964035	HNTB/Liro JV	No	Presenter
Mark Wengenosky	mwengenosky@posillicoinc.com	516-236-8353	Posillico Civil, Inc.	No	Subcontractor
Mark Careyva	mcareyva@keller-na.com	610-353-0600	Keller North America	No	Subcontractor
Samay Lohia	samay.lohia@ohlna.com	7185542513	Judlau Contracting	No	Prime Contractor / JV Member
James Benson	jbenson@jrcruz.com	732-290-0700	JRCRUZ Corp	No	Prime Contractor / JV Member
Raphael Stewart	rstewart@hrcg.com	3329995833	Hunter Roberts Construction Group	No	Prime Contractor / JV Member
Cynthia Strodel	cstrodel@jrcruz.com	732-664-2387	JRCRUZ Corp.	No	Prime Contractor / JV Member
John Grillo	jrgrillo@keller-na.com	201-489-1700	Keller North America, Inc.	No	Subcontractor
Jerry Aliberti	gerard.aliberti@ohlna.com	718-554-2315	OHL NA	No	Prime Contractor / JV Member
Steven Timmons	steven.timmons@skanska.com	617-947-3218	Skanska	No	Prime Contractor / JV Member
Mihir Shah	shahmi@ddc.nyc.gov	718-391-3154	NYCDDC	No	NYCDDC
Armand DAngelo	adangelo@hellmanelectric.com	718-931-9900	Hellman Electric	No	Subcontractor
Jon Heslin	jheslin@ur.com	5084502860	United Rentals Fluid Solutions	Yes	Subcontractor
Jon Verzella	jon.verzella@skanska.com	718-340-0918	Skanska	No	Prime Contractor / JV Member
John Labozza	jlabozza@cacindinc.com	347-728-7709	C.A.C. Industries Inc.	No	Subcontractor
David Finocchio	dwfinocchio@keller-na.com	401-334-2565	Keller	No	Subcontractor
Muhammad Asif	Masif@hntb.com	2129159585	HNTB	No	PM/CM
Kim Martinez	kmartinez@rainforrent.com	661-747-1466	Rain for Rent	No	Subcontractor
Louis D'Amico	lsdamico@laneconstruct.com	9143554719	Lane	No	Prime Contractor / JV Member
Ryan Tate	rtate4@ur.com	908-440-9042	United Rentals Trench Safety	No	Vendor
Kaveh Samimi	ksamimi@entech.nyc	9177206517	EnTech Engineering PC	Yes	Subcontractor
Avital Kohananoo	estimating@mljcontracting.com	9293906725	MLJ Contracting	No	Prime Contractor / JV Member
John Khachmanian	Khachmanianj@liro.com	917 847-0850	HNTB/LiRo JV	No	PM/CM Consultant
Zachary Dillon	zdillon@hntb.com	3479200527	HNTB/LiRo	No	PM/CM
Youssef Dehne	youssef.dehne@skanska.com	917-559-1422	Skanska USA Civil	No	Prime Contractor / JV Member
Joseph Casillo	joseph.casillo@ohlna.com	516 359 1720	Judlau/OHL	No	Prime Contractor / JV Member
Peggy Stepe	pstepe@rainforrent.com	908-463-9142	Rain for Rent	No	Subcontractor
Tatiana Zamudio	estimating@mljcontracting.com	6468136688	MLJ Contracting	No	Prime Contractor / JV Member
Dylan Wong	dwong@keller-na.com	+1-201-489-1700	Keller North America	No	Subcontractor
Willie Cruz	willie.cruz@skanska.com	6467722134	Skanska	No	Prime Contractor / JV Member
Byron Lopez	blopez@cacindinc.com	(917) 935-2107	C.A.C. Industries, Inc.	No	Subcontractor
Fabio Iannacco	fiannacco@hcvlab.com	973-303-2275	Hampton-Clarke, Inc.	Yes	Subcontractor
Justine Lentini	jlentini@keller-na.com	973-627-2100	Keller North America	No	Subcontractor
John Paget	jpaget@mljcontracting.com	9176182872	MLJ Contracting	No	Prime Contractor / JV Member
Mark Bedard	mark.bedard@lindsay.com	402-206-6014	Lindsay Transportation	No	Subcontractor
Frank Lulley	frank.lulley@skanska.com	718 340-0818	Skanska	No	Prime Contractor / JV Member
Serhan Celik	serhan.celik@ohlna.com	718-554-2552	Judlau OHL	No	Prime Contractor / JV Member
Eric Shatzkamer	Eric.Shatzkamer@skanska.com	718 340 0858	Skanska USA Civil	No	Prime Contractor / JV Member
Adria Torcellini	adria.torcellini@ohlna.com	704-534-6491	OHL NA	No	Prime Contractor / JV Member
Francisco Salazar	fsalazar@ohlusa.com	9498728295	OHL USA, Inc.	No	Prime Contractor / JV Member
Doug Jackson	djackson@posillicoinc.com	718-878-4990	Posillico, Inc.	No	Subcontractor
Elias Sadiq	elias.sadiq@ohlna.com	718-554-2457	Judlau OHL	No	Prime Contractor / JV Member
Zachary Kovalovsky	ZKovalovsk@ur.com	5515024436	United Rentals	No	Subcontractor
Myriam Dube	estimation@bpdl.com	418-668-6161	Betons Prefabriques du Lac Inc (BPDL)	No	Subcontractor
Jurate Hassan	hassanju@ddc.nyc.gov	718-391-2814	DDC	No	N/A
Gregory Ravix	ravixg@ddc.nyc.gov	718-391-2336	DDC	No	Department of Design and Construction
Neville Bugwadia	neville.bugwadia@ohlna.com	718-554-2363	OHL USA, Inc.	No	Prime Contractor / JV Member
George Sholy	gsholy@EnTech.nyc	7327964792	EnTech	Yes	Subcontractor
Michael Fagan	michael.fagan@skanska.com	718-340-0772	Skanska	No	Prime Contractor / JV Member
Richard Ocken	rocken@mljcontracting.com	917-807-4293	MLJ Contracting Corp	No	Prime Contractor / JV Member
Max Pucciarello	mpucciarello@keller-na.com	(973) 627-2100	Keller - North America	No	Subcontractor
Laszlo Borhi	Laszlo.borhi@skanska.com	914-486-3212	Skanska Civil USA	No	Prime Contractor / JV Member
William Marman	wmarman@hntb.com	9179124471	HNTB	No	PM/CM Team
Peter Pappas	ppappas@hntb.com	914-262-7168	HNTB	No	PM / REI
Kevin Wikar	kcwikar@keller-na.com	410.551.1980	Keller NA- HB Wick Drains division	No	Subcontractor
Bobby Issac	issacbo@ddc.nyc.gov	7183911553	NYC DDC	No	DDC
Jeff Surette	jsurette@ur.com	5089010691	United Rentals Trench Safety	No	supplier of engineering & trench safety products

SANDRESM1 Attendance List for 1/4/21 Zoom Pre-Bid Conference

Dena Prastos	dena@indigoriver.com	9072295244	Indigo River	Yes	Subcontractor
Krupesh Patel	patelkr@ddc.nyc.gov	3479867916	NYC DDC	No	City
Thu-Loan Dinh	dinhth@ddc.nyc.gov	7183911050	NYC DDC	No	NO
Vincent Montanti	montantiv@liro.com	2017880624	LiRo	No	PMCM
Brad Woodley	bawoodley@laneconstruct.com	203-235-3351	The Lane Construction Corporation	No	Prime Contractor / JV Member
David Adar	DAdar@TullyConstruction.com	718-446-7000	Tully Construction	No	Prime Contractor / JV Member
Peter Mazza	mazzaman@tullyconstruction.com	203 253 4099	Tully Construction Co., Inc.	No	Prime Contractor / JV Member
Peter Tully	petertully@tullyconstruction.com	(718) 446-7000	Tully Construction	No	Prime Contractor / JV Member
Shea Thorvaldsen	shea@indigoriver.com	6467739414	Indigo River	Yes	On LiRo/HNTB Team
Timothy Boresen	Timothy.boresen@seca-tunnel.com	732956659	Seca Underground Corp	Yes	Subcontractor
Zac Curanovic	zac.curanovic@skanska.com	7183401035	Underpinning & Foundation Skanska	No	Subcontractor
Steve Kuprat	skuprat@rainforrent.com	9086705967	Rain For Rent	No	Subcontractor
Michael Turcotte	michael.turcotte@skanska.com	718-309-1465	Skanska USA Civil Northeast	No	Prime Contractor / JV Member
Billy Rivera	billy.rivera@skanska.com	7183400851	Skanska USA Civil	No	Prime Contractor / JV Member
Ricardo Oliveira Paes	ricardo.oliveira@ohlna.com	7185542328	Judlau - OHL NA	No	Prime Contractor / JV Member
Shayan Shafigh	sshafigh@mljcontracting.com	9736993121	MLJ Contracting Corp.	No	Prime Contractor / JV Member
Ryan Ramchal	rramchal@eecruz.com	2124313993	EE Cruz & Co. Inc.	No	Undetermined
James Picariello	james.picariello@skanska.com	718-340-0847	Skanska USA Civil Northeast Inc.	No	Prime Contractor / JV Member
Kishma Fredericks	Builders@kishconstruct.com	718-594-5986	Kish Contracting LLC	Yes	Subcontractor
John Ventimiglia	jventimiglia@mljcontracting.com	516-523-3696	MLJ Contracting Corp.	No	Prime Contractor / JV Member
Timothy Mullarkey	bids@gracecivil.com	516-250-6729	Grace Industries, LLC	No	Prime Contractor / JV Member
Brenda Barreiro	barreirbr@ddc.nyc.gov	718-391-1041	DDC	No	NA
Cory Mermer	cmermer@iovinoent.com	908-723-3365	Iovino Enterprises	No	Prime Contractor / JV Member
J.J. HAUGLAND	JHAUGLAND@HAUGLANDLLC.COM	6319873684	HAUGLAND GROUP	No	tbd
Karen General	generalk@ddc.nyc.gov	718-391-2410	DDC	No	DDC
Lorraine Holley	holleyl1@ddc.nyc.gov	917-620-5298	DDC	No	DDC staff
Richard Jones	jonesri@ddc.nyc.gov	718.391.1417	NYC DDC	No	Owner
Lee Askenazy	l.askenazy@jtcleary.com	845-352-1099 ext. 434	J.T. Cleary, Inc.	No	Subcontractor
Carol Shobrook	c.shobrook@jtcleary.com	845-352-1099 ext. 421	J.T. Cleary, Inc,	No	Subcontractor
Michael Vargas	mike.vargas@skanska.com	718-340-0871	Skanska USA Civil, NE	No	Prime Contractor / JV Member
Eric Ilijevich	ilijevier@ddc.nyc.gov	3476282267	NYC DDC	No	Design PM
Jeff Di Stasi	jmdistasi@keller-na.com	9736272100	Keller	No	Subcontractor
Joel Karim	Joel.Karim@Skanska.com	646-265-4107	Skanska	No	Prime Contractor / JV Member
Michael Prigge	priggem@liro.com	8455964035	Liro	No	PM/CM
Jim Cleary	j.cleary@jtcleary.com	(201) 888-0706	J.T. Cleary, Inc.	No	Subcontractor

Department of Design and Construction

EAST SIDE COASTAL RESILIENCY

SANDRESM1: PRE-BID MEETING

JANUARY 4, 2021

AGENDA

- INTRODUCTION (Richard Jones - DDC)
- ACCO (Donna Pope - DDC)
- PROJECT OVERVIEW (Thu-Loan Dinh – DDC)
- GENERAL CONTRACT INFORMATION (HNTB-LiRo team)
- PROJECT PHASING
- PEDESTRIAN BRIDGES
- INCENTIVES AND DISINCENTIVES
- CON EDISON TRANSMISSION LINES
- COORDINATION WITH OTHER PROJECTS
- MTA COORDINATION AND SUBMITTALS
- WATERFRONT OPERATIONS
- QUESTIONS

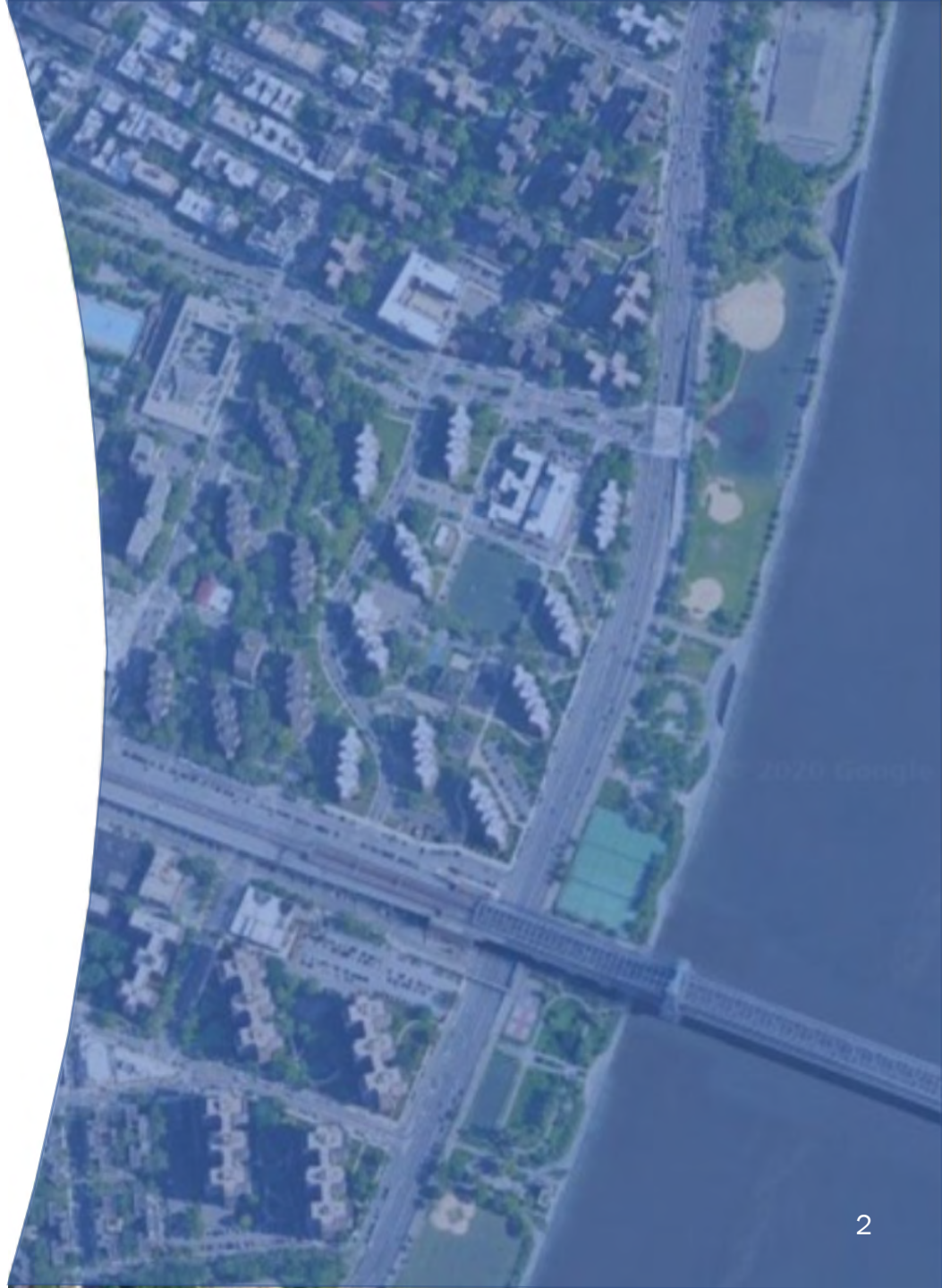

INTRODUCTION

Changes from Previous Advertisement

Refer to Volume 3, S-Pages, Article B18

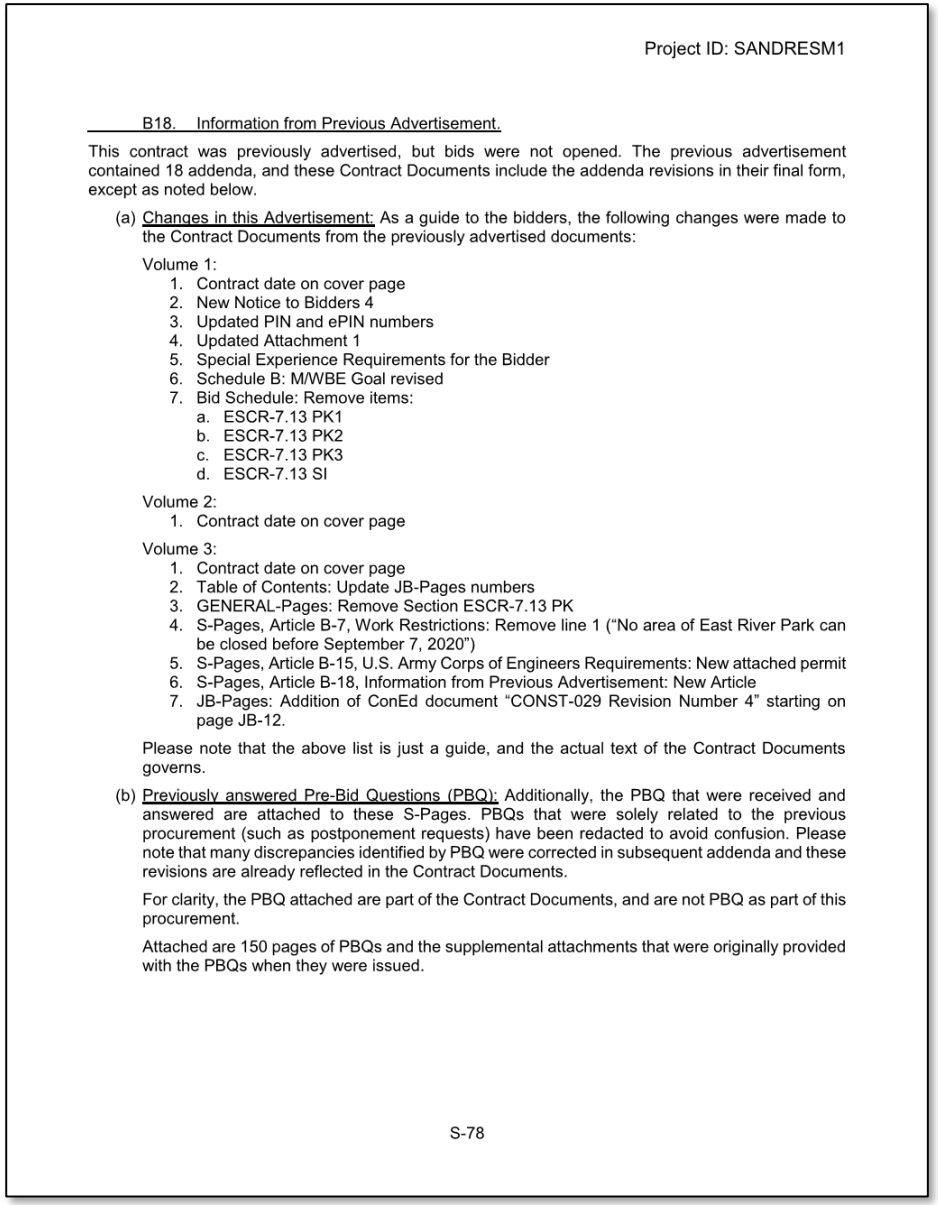

Project ID: SANDRESM1

B18. Information from Previous Advertisement.

This contract was previously advertised, but bids were not opened. The previous advertisement contained 18 addenda, and these Contract Documents include the addenda revisions in their final form, except as noted below.

(a) Changes in this Advertisement: As a guide to the bidders, the following changes were made to the Contract Documents from the previously advertised documents:

Volume 1:

1. Contract date on cover page
2. New Notice to Bidders 4
3. Updated PIN and ePIN numbers
4. Updated Attachment 1
5. Special Experience Requirements for the Bidder
6. Schedule B: M/WBE Goal revised
7. Bid Schedule: Remove items:
   a. ESCR-7.13 PK1
   b. ESCR-7.13 PK2
   c. ESCR-7.13 PK3
   d. ESCR-7.13 SI

Volume 2:

1. Contract date on cover page

Volume 3:

1. Contract date on cover page
2. Table of Contents: Update JB-Pages numbers
3. GENERAL-Pages: Remove Section ESCR-7.13 PK
4. S-Pages, Article B-7, Work Restrictions: Remove line 1 (“No area of East River Park can be closed before September 7, 2020”)
5. S-Pages, Article B-15, U.S. Army Corps of Engineers Requirements: New attached permit
6. S-Pages, Article B-18, Information from Previous Advertisement: New Article
7. JB-Pages: Addition of ConEd document “CONST-029 Revision Number 4” starting on page JB-12.

Please note that the above list is just a guide, and the actual text of the Contract Documents governs.

(b) Previously answered Pre-Bid Questions (PBQ): Additionally, the PBQ that were received and answered are attached to these S-Pages. PBQs that were solely related to the previous procurement (such as postponement requests) have been redacted to avoid confusion. Please note that many discrepancies identified by PBQ were corrected in subsequent addenda and these revisions are already reflected in the Contract Documents.

For clarity, the PBQ attached are part of the Contract Documents, and are not PBQ as part of this procurement.

Attached are 150 pages of PBQs and the supplemental attachments that were originally provided with the PBQs when they were issued.

S-78

ACCO – DONNA POPE

Payee Information Portal

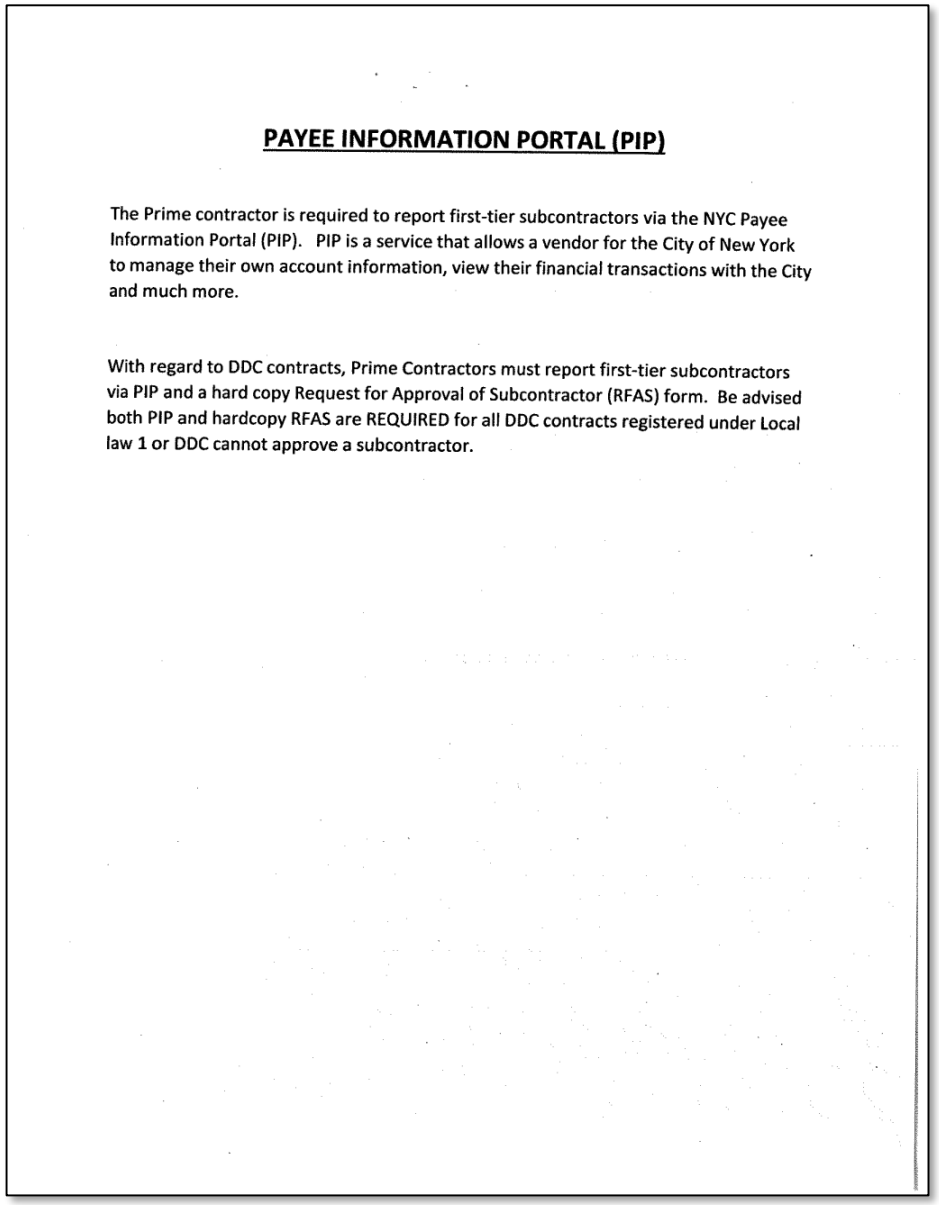

PAYEE INFORMATION PORTAL (PIP)

The Prime contractor is required to report first-tier subcontractors via the NYC Payee Information Portal (PIP). PIP is a service that allows a vendor for the City of New York to manage their own account information, view their financial transactions with the City and much more.

With regard to DDC contracts, Prime Contractors must report first-tier subcontractors via PIP and a hard copy Request for Approval of Subcontractor (RFAS) form. Be advised both PIP and hardcopy RFAS are REQUIRED for all DDC contracts registered under Local law 1 or DDC cannot approve a subcontractor.

HireNYC

hirenyc

HireNYC: Goods and Services – Contractor Overview

Program Overview
HireNYC: Goods and Services is part of the Mayor's larger HireNYC program, announced in *One New York: The Plan for a Strong and Just City* and *Career Pathways: One City Working Together*. It is a partnership between the City, employers and jobseekers to leverage the City's purchasing power to connect low-income and underserved New Yorkers to employment opportunities. HireNYC: Goods and Services is a hiring process that requires businesses that contract with the City to share entry and mid-level positions with the City, and interview the qualified candidates that the City refers. It provides free, high quality recruitment services to employers and high-quality employment services to jobseekers. Contractors will work with the Department of Small Business Services' Workforce1 System (Workforce1), a free employment service, to find qualified candidates to fill openings across their organization.

HireNYC: Goods and Services Requirements
On applicable contracts, all contractors will be required to:

- Enroll with the HireNYC Portal within thirty (30) days after registration of the contract;
- Provide information on all entry to mid-level job opportunities[1] arising from a contract that will be performed in the City;
- Interview qualified candidates sourced from Workforce 1 for those opportunities;
- Provide feedback to Workforce 1 related to referred candidates that were interviewed and employment information related to referred candidates that were hired; and
- If no applicable employment opportunity related to a contract arose, to certify as such.

These requirements were designed to assist contractors with finding employees if openings occur throughout the term of the contract. Though contractors will be required to interview qualified candidates referred by Workforce1, contractors will not be required to hire anyone.



HireNYC Portal Enrollment Screen

Enroll Contracts through the HireNYC Portal
All contractors must enroll qualifying contracts through the HireNYC Portal to attest to possible hiring needs arising from the contract. Enrollment must be completed within 30 days of the contract registration date. HireNYC: Goods and Services requirements apply to all new contracts with a value of $1 million or more for:

- Goods and services contracts;
- Construction contracts with non-trade position openings; and
- Human services contracts that are not subject to the Public Assistance Hiring Rider

[1] Entry to mid-level job opportunities include those requiring no more than an associate degree, as provided by the New York State Department of Labor (see Column F of https://labor.ny.gov/stats/2012-2022-NYS-Employment-Prospects.xls)

Enrollment through the HireNYC Portal includes:

1. Providing the name, phone number and email address for the person who will be the contractor's primary contact with the City for all communications related to HireNYC: Goods and Services;
2. Providing basic information about the contractor, including business name, address, EIN and City Vendor ID Number;
3. Providing the Contract ID Number; and
4. Attesting to whether the contractor intends to hire any entry or mid-level position(s) for work arising from the contract to be performed in the City, and if so providing the approximate start date for the first hire.

If new positions become available during the life of the contract, those hiring requirements must be submitted through the HireNYC Portal. Contractors will be required to re-enroll through the HireNYC Portal every 365 days throughout the life of the contract.

Work with Workforce1 Recruiters to Find Qualified Candidates
If a contractor plans to hire for any entry or mid-level position(s) arising from a qualified contract, position profiles must be created in the HireNYC Portal for each position no less than 3 weeks before the intended date of employment. Once a position profile has been created, a recruiter from Workforce1 will contact the contractor within 3 business days to confirm the details of the position(s), discuss the screening process and recruitment timeline. The Workforce1 recruiter will work with the contractor's primary contact to develop a recruitment plan that aligns with the contractor's specific hiring needs. The contractor's primary contact should be knowledgeable of the contractor's hiring needs and/or have the ability to hire on behalf of the contractor.

After finalizing the recruitment plan with the contractor, Workforce1 will recruit candidates for the open positions and screen qualified candidates based on the contractor's specifications and hiring needs. Workforce1 will notify the contractor about qualified candidates and provide information, such as a resume with contact details, to allow the contractor to review the candidate profiles and schedule interviews. If the contractor does not consider a candidate to be qualified for an interview, they must provide a reason to Workforce1 for why the candidate is being disqualified.


HireNYC Portal Candidate Feedback Screen

Provide Feedback on Interviews and Hires
The contractor must provide to Workforce1 information about the outcomes of the interviews. For candidates that were hired, this includes the start date as well as wage and hours per week. The contractor will be able to provide this information through the HireNYC Portal.

For general HireNYC questions, contact HireNYCQuestions@cityhall.nyc.gov

For questions about the HireNYC Portal, contact HireNYCSupport@sbs.nyc.gov.

HireNYC URL: http://www.nyc.gov/hirenyccontracts

PROJECT OVERVIEW

PROJECT OVERVIEW



PROJECT OVERVIEW



GENERAL CONTRACT INFORMATION

GENERAL CONTRACT INFORMATION

Items of Importance

- Time for Completion
- MBE/WBE Requirement
- Contractor Must Self-Perform a Minimum of 51% of the Work
- Engineer's Field Office
- HUD Funding
- Section 3
- Envision (Following Slides)

GENERAL CONTRACT INFORMATION – Increasing Sustainability via ENVISION

ESCR-5 Construction & Demolition Waste

- At least fifteen percent (15%) of the total project materials, supplies, and equipment must meet explicit environmental standards
- At least five percent (5%) of all project materials must include recycled content
- Divert at least fifty percent (50%) of all demolition and general construction waste from landfills

ESCR-6 Conservation of Water & Energy

- Implement two (2) of the listed strategies to reduce construction energy consumption
- Implement one (1) of the listed strategies to reduce construction water consumption

PHASING

PHASING

Overall Contract Drawings

- Contractors to develop work plan that encompass phasing, interim working conditions and means/methods

Suggested Phasing Plan

- 42% (min.) of East River Park to remain open at all times
- Section ESCR-HW-901 –(GENERAL Pages)
- Park amenities show to be maintained in each phase

Contractor's Phasing Plan: Submittal and Approval

- Specific phasing plan to be submitted for approval
- Must meet criteria shown on Contract Drawings

Shared Use Path for Access

- Accessibility to emergency vehicles 24/7
- Flaggers for pedestrians
- Con Edison fiber wrapping

PHASING: KEY MAP

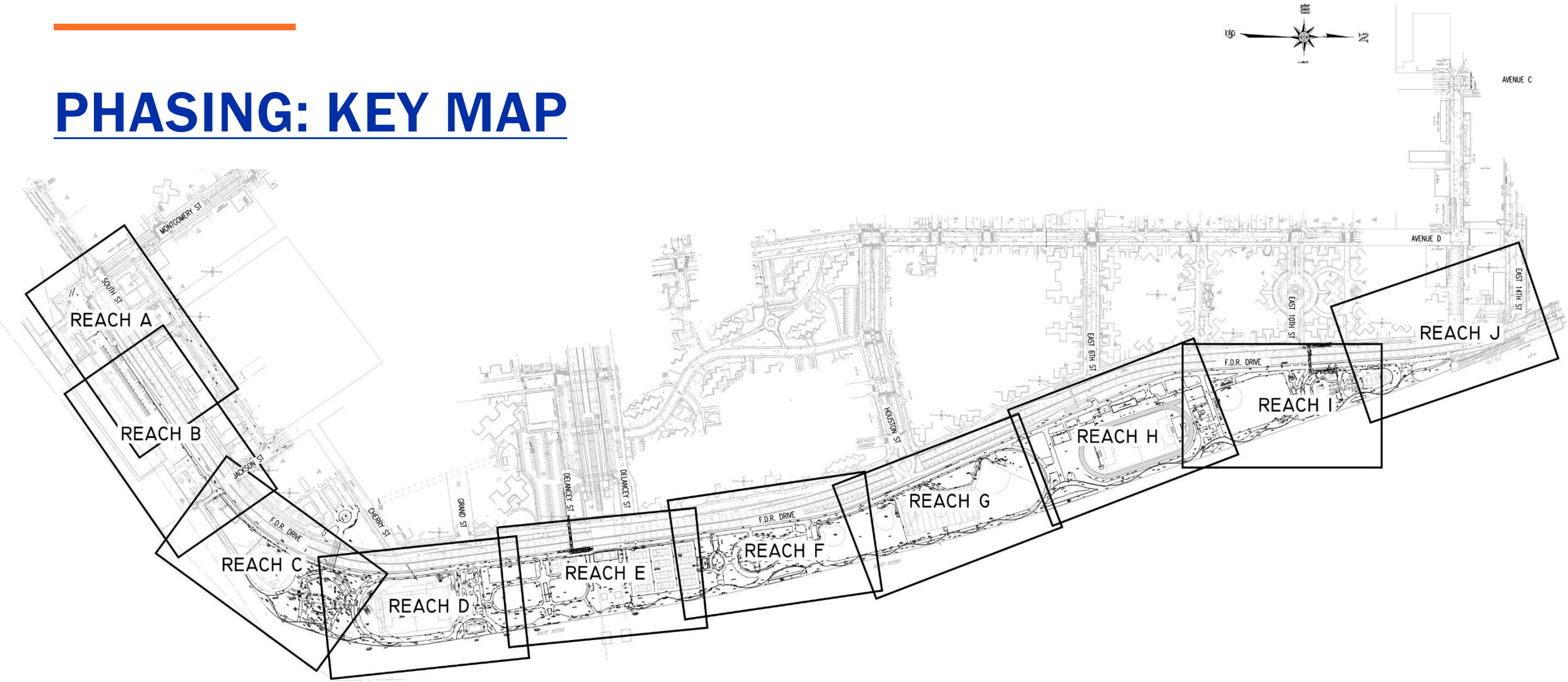

PHASING: PHASE I



PHASING: PHASE II

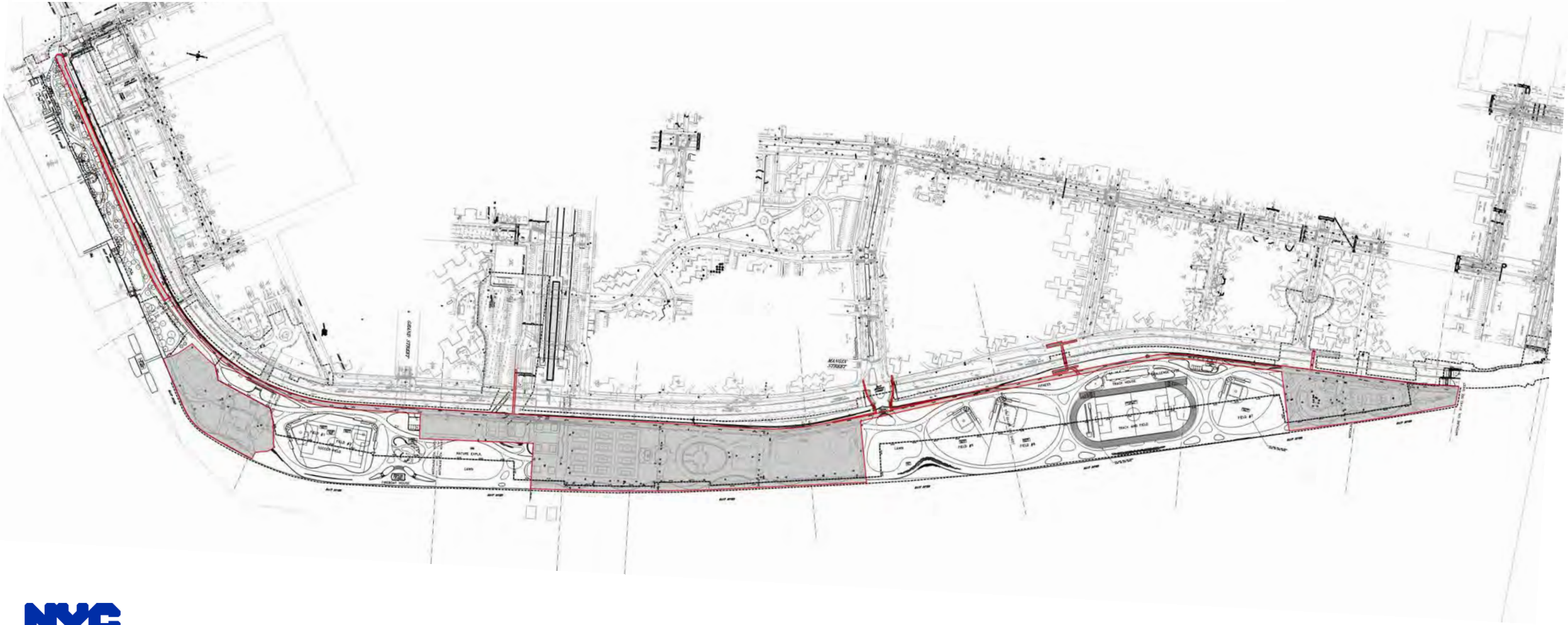

PHASING: GENERAL NOTES

NOTES FOR SUGGESTED PHASING OF EAST RIVER PARK:

1. SUGGESTED PHASE LIMITS ARE INDICATED IN THE FOLLOWING DRAWINGS.
2. MUST MAINTAIN ACCESS INTO THE OPEN EAST RIVER PARK ZONES.
3. MUST PROVIDE, PAVE, AND MAINTAIN, AS NECESSARY AND AS DIRECTED BY THE ENGINEER, A SHARED ACCESS ROAD ACROSS CLOSED ZONES FOR CITY MAINTENANCE, EMERGENCY ACCESS AND OTHER AGENCIES.
4. SHARED ACCESS ROAD MUST HAVE SUFFICIENT GATES AT THE LIMITS OF THE CLOSED ZONE. GATES MUST BE SECURED AND UTILIZE A GUARD SERVICE TO PROVIDE ACCESS FOR EMERGENCY VEHICLES, OTHER CONTRACTORS AND ALL CITY AGENCIES 24 HOURS PER DAY, YEAR-ROUND, FOR THE DURATION OF THE PROJECT.
5. PHASE LIMITS MAY BE CHANGED AS APPROVED AND ACCEPTED BY THE CITY. THE FOLLOWING CRITERIA, NOT LIMITED TO, WILL BE CONSIDERED:
   a. OPEN SPACE MUST BE AT LEAST 42% OF THE EAST RIVER PARK TOTAL.
   b. PARK AMENITIES ARE NOT DIMINISHED.
   c. ACCESS IS MAINTAINED TO OPEN ZONES OF THE EAST RIVER PARK.
6. PHASING DRAWINGS ARE LIMITED TO SHOWING ONLY THE SUGGESTED PHASING AND ARE NOT ALL INCLUSIVE OF THE WORK REQUIRED BY THE CONTRACT DOCUMENTS.
7. THE CONTRACTOR'S ATTENTION IS CALLED TO SPECIFICATION SECTION ESCR-HW-901, WHICH PROVIDES DETAILS, METHOD OF PAYMENT, ETC. FOR PHASING AND RELATED WORK.
8. ATTENTION IS CALLED TO SPECIFICATION SECTION FOR SWPPP, WHICH INCLUDES GUIDANCE ON MAXIMUM ALLOWABLE DISTURBANCE AREAS.

FDNY ACCESS:

1. HYDRANTS MUST BE AVAILABLE FOR FDNY USE DURING ALL PHASES OF THE WORK. IN THE EVENT THAT HYDRANTS ARE RENDERED UNUSABLE OR DIFFICULT TO ACCESS LOCAL FDNY SHALL BE NOTIFIED, AND SIGNAGE PLACED AT THE AFFECTED HYDRANT DIRECTING FDNY PERSONNEL TO THE LOCATION OF THE TWO(2) NEAREST ACTIVE AND READILY AVAILABLE HYDRANTS.
2. FDNY PERSONNEL MUST HAVE EMERGENCY ACCESS TO THE SITE AT ALL TIMES. COORDINATION WITH LOCAL FDNY PERSONNEL ALERTING THEM TO ACCESS POINTS DURING THE VARIOUS STAGES OF THE WORK SHALL BE REQUIRED. SIGNAGE SHALL BE PLACED, PARTICULARLY DURING THE STAGED CONSTRUCTION, DIRECTING FDNY WHERE AND HOW TO ACCESS THE SITE.

PIER 42 CONSTRUCTION ACCESS:

1. CONTRACTOR TO COORDINATE WITH PIER 42 PROJECT AS REQUIRED PER CONTRACT DOCUMENTS AND SPECIFICATION.
2. THE PIER 42 CONTRACTOR SHALL BE PROVIDED UNFETTERED USE OF THE SHARED ACCESS ROAD FROM MONTGOMERY STREET IN REACHES A, B, AND C AT ALL TIMES.
3. THE PIER 42 CONSTRUCTION INCLUDES THE REPLACEMENT OF TWO (2) 48" SEWER LINES THAT CROSS THE SHARED ACCESS ROAD THAT WILL BE ONGOING DURING THE WORK UNDER THIS CONTRACT.
4. THE CONTRACTOR IS ADVISED THAT THE FLOODWALL WORK ALONG THE SHARED ACCESS ROAD IN REACHES A AND B SHALL BE SCHEDULED AND PERFORMED IN A MANNER THAT DOES NOT AFFECT THE PIER 42 CONTRACTORS ACCESS REQUIREMENTS.

CORLEARS HOOK FERRY ACCESS:

1. MUST MAINTAIN ACCESS TO FERRY SERVICE AT ALL TIMES FOR DURATION OF THE PROJECT.
2. MUST MAINTAIN PEDESTRIAN FERRY ACCESS FROM THE GENERAL VICINITY OF THE EXISTING CORLEARS HOOK BRIDGE AT ALL TIMES DURING CONSTRUCTION OF THE REPLACEMENT BRIDGE.
3. FERRY OPERATES FROM APPROX. 0630 UNTIL 2130, 7 DAYS PER WEEK (SCHEDULE SUBJECT TO CHANGE).
4. A CLEAR, LIGHTED AND FENCED PAVED PATH SHALL BE CREATED AND/OR MAINTAINED FROM THE FERRY LANDING TO THE CORLEARS HOOK FDR DRIVE CROSSING. FLAGGERS SHALL BE UTILIZED AS NEEDED TO HALT VEHICULAR TRAFFIC THAT MAY CROSS THE PEDESTRIAN PATH.
5. ALL COSTS, UP TO AND INCLUDING THE INSTALLATION AND REMOVAL OF A TEMPORARY PEDESTRIAN BRIDGE, SHALL BE AS DESCRIED IN SECTION ESCR-HW-901.

PHASE	OPEN PARK AMENTITIES
1	CONVERTED COMPOST YARD, AMPHITHEATER/ BANDSHELL, BASKETBALL COURTS, VOLLEYBALL COURT, MULTI-USE FIELD, TENNIS COURTS, TENNIS HOUSE
	DANCE CIRCLE, BASEBALL FIELDS 3 & 4
	10TH ST. COMFORT STATION, BASKETBALL COURT, 10TH ST. PLAYGROUND, BBQ AREA
2	UPLAND PORTION OF PIER 42, FIELDS 1&2, FIREBOAT HOUSE, LAWN
	LAWN, FIELDS 5 & 6
	FITNESS AREA, TRACK HOUSE, TRACK & FIELD, FIELD 7, CHALLENGE COURSE

INCENTIVES:

1. N/A

WILLIAMSBURG BRIDGE CONTRACT WB-9:

1. CONTRACT WB-9, WHICH INCLUDES STRUCTURAL STEEL REPAIRS IN THE COLUMNS, IS EXPECTED TO START SPRING 2022 AND EXTEND APPROX. ONE (1) YEAR. THE CONTRACTOR SHALL COORDINATE WITH THE WB-9 CONTRACTOR AS NECESSARY.

CON EDISON TRANSMISSION LINE CARBON FIBER WRAPPING:

1. ALL WORK ASSOCIATED WITH THE CARBON FIBER WRAPPING OF THE CON EDISON TRANSMISSION LINES SHALL BE COMPLETED NO LATER THAN JUNE 1, 2023 (6/1/23).

ESSENTIAL FIRST HABITAT:

1. IN ACCORDANCE WITH STIPULATIONS PROVIDED BY USACE, NO COFFERDAM INSTALLATION WORK SHALL BE PERFORMED BETWEEN JANUARY 15 TO MAY 31 TO MINIMIZE IMPACTS TO WINTER FLOUNDER EGGS AND LARVAE.

PHASING: TYPICAL PLAN

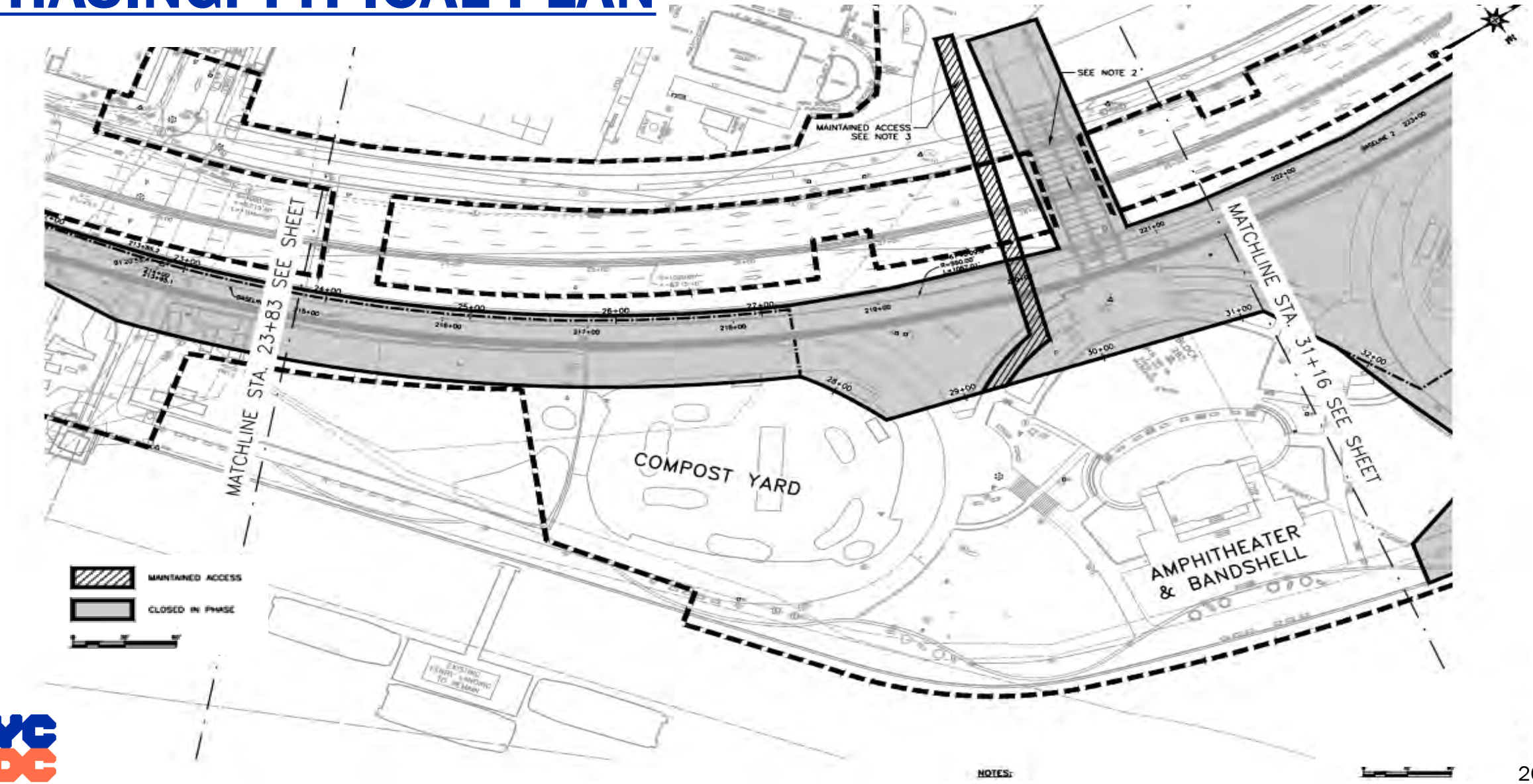

PHASING SPECIFICATIONS & TEMPORARY MEASURES

Temporary Pedestrian Bridge (Corlears Hook)

- Park and ferry access

Temporary Fencing and Security

- Maintain 24 hour access

Grade Separation Protection

Maintenance of Park Utilities

- Irrigation, lighting, etc.

Sewer Flow Maintenance and Temporary Measures

- Temporary drainage lines, bulkheads, etc.

PEDESTRIAN BRIDGES

PEDESTRIAN BRIDGES

OCMC Stipulations

- 10 hour FDR Drive closures
- 5 hour FDR Drive closures

SELF PROPELLED MOVABLE TRANSPORTERS (SPMTs)

INCENTIVES AND LIQUIDATED DAMAGES

INCENTIVES AND LIQUIDATED DAMAGES

Substantial Completion

- Accelerated Substantial Completion - $30,000 per day, up to 150 CCDs
- Liquidated Damages - $20,000 per day, with unlimited days

CON EDISON TRANSMISSION LINES

CON EDISON TRANSMISSION LINES

- Carbon Fiber Wrapping
- Shared Use Path Impact
- Sections JB-123 and JB-405A (JB Pages)
- Schedule

CON ED TRANSMISSION LINES – TYPICAL PLAN

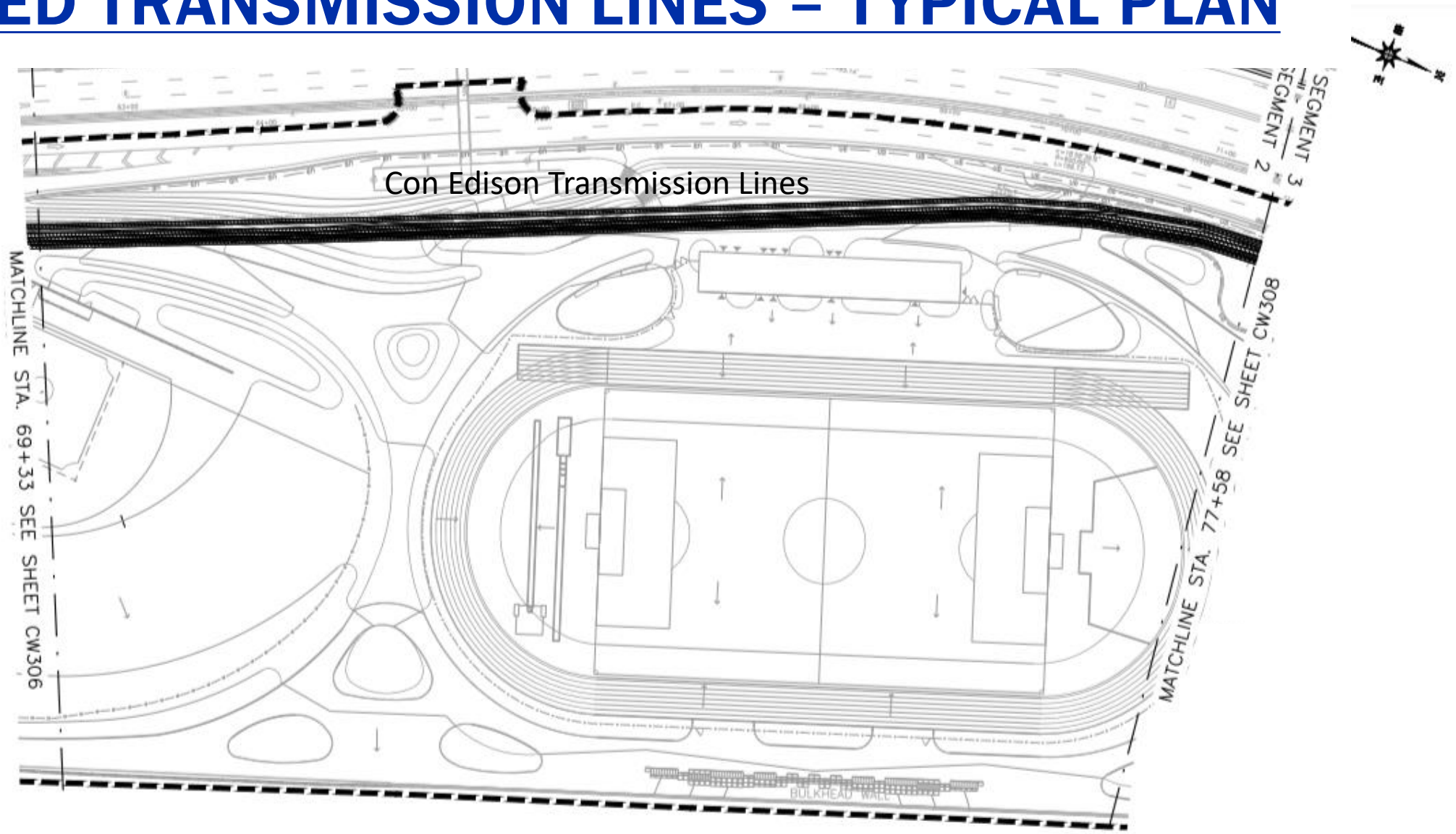

COORDINATION WITH OTHER PROJECTS

COORDINATION WITH OTHER PROJECTS

- SANDRESM2 – Area PA2
- SANDRESPC – Parallel Conveyance
- WB-19 - NYCDOT
- Pier 42 - NYCEDC

MTA COORDINATION AND SUBMITTALS

MTA COORDINATION AND SUBMITTALS

Work Over and Adjacent to MTA Structures

- Submittals to MTA Outside Projects
- Vibration Monitoring
- Installation Stipulations
- Potential General Orders Required
- Force Account Ownership

MTA COORDINATION – TYPICAL MEANS AND METHODS

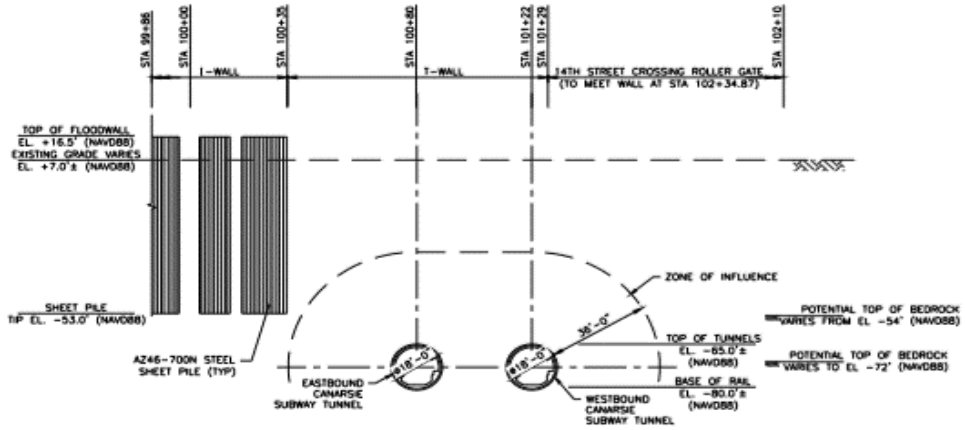

STAGE I – SHEET PILE INSTALLATION

NOTE: SHEET PILE INSTALLED BY PRESS-IN METHOD.

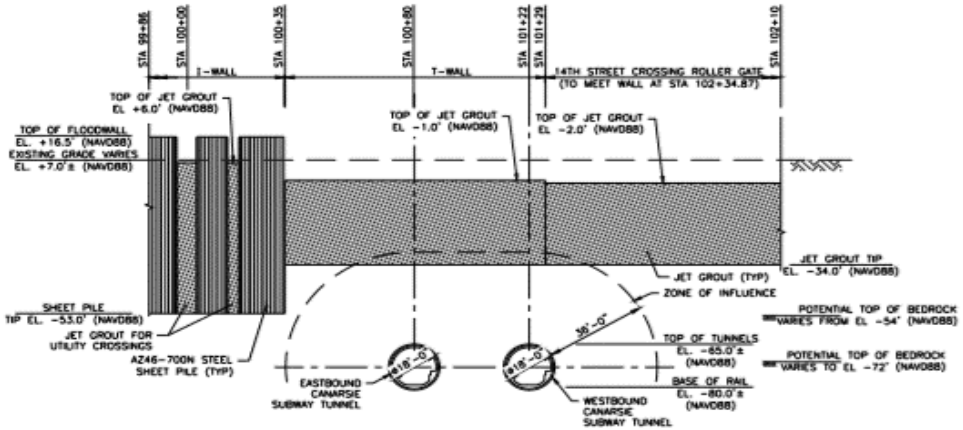

STAGE II – JET GROUT INSTALLATION

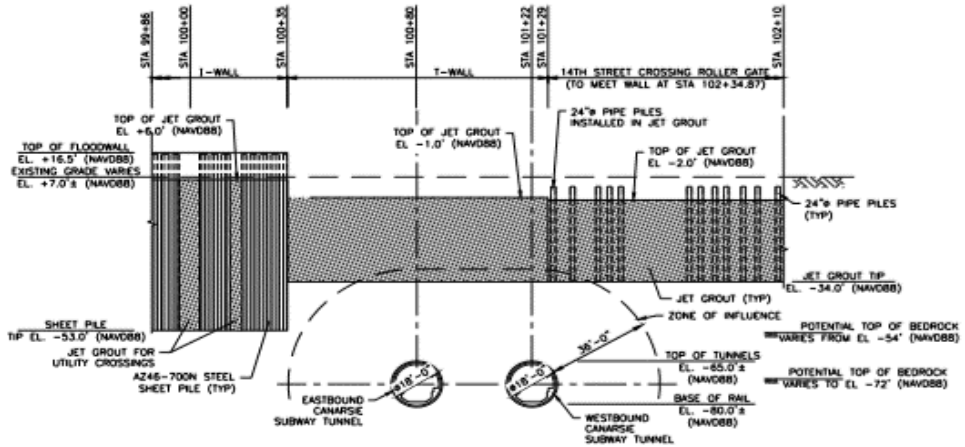

STAGE III – INSTALL PIPE PILES IN JET GROUT

NOTE: PIPE PILES TO BE VIBRATED INTO WET JET GROUT.

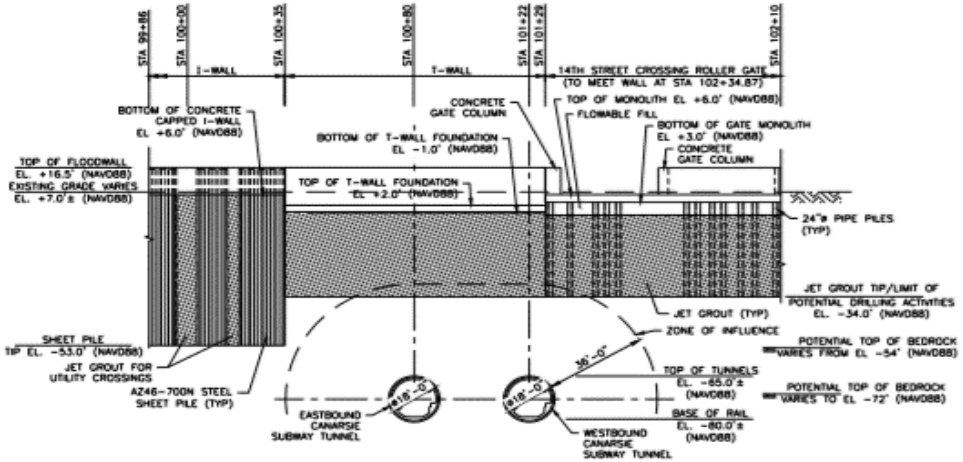

STAGE IV – CONCRETE AND FLOWABLE FILL PLACEMENT

WATERFRONT OPERATIONS

WATERFRONT OPERATIONS

Waterways

- Notifications, USCG LNTM's, VTS
- Security
- Navigation Safety
- Channel and Bridge Permits
- Water Depth
- Mooring and Anchoring
- Sections ESCR 7.13WF1 and 7.13WF2

Operational Safety

- Floating Plants
- Response Vessels
- Emergency Action Plans

Environmental Excellence

- Pollution Control
- Spill Response
- Impact Minimization
- NYSDEC/USACE General Permit and Special Conditions
- Fueling

QUESTIONS?

CITY OF NEW YORK
DEPARTMENT OF DESIGN AND CONSTRUCTION
DIVISION OF INFRASTRUCTURE

ADDENDA CONTROL SHEET

BID SUBMISSION DATE / TIME: **February 8, 2021, 8:30 AM – 11:00 AM**
BID OPENING DATE/ TIME: **February 8, 2021, 11:30 AM**

PROJECT NO.: **SANDRESM1**

DESCRIPTION: **INSTALLATION OF EAST SIDE COASTAL RESILIENCY FROM MONTGOMERY STREET TO EAST 15TH STREET**

Addendum		Addendum Contains:					
No.	Date	Revised Bid Date/Time	Revised Bid Schedule	Questions & Responses	Additional Amendments	Drawings (number)	General Counsel Approval
1	12/28/2020	☐	☐	☐	☒	☐ (0)	
2	12/31/2020	☐	☐	☐	☒	☒ (88)	
3	1/11/2021	☐	☐	☐	☒	☐ (0)	
4	1/15/2021	☐	☒	☒	☒	☐ (0)	
5		☐	☐	☐	☐	☐ (0)	
6		☐	☐	☐	☐	☐ (0)	
7		☐	☐	☐	☐	☐ (0)	
8		☐	☐	☐	☐	☒ (0)	
		☐	☐	☐	☐	☐ (0)	
		☐	☐	☐	☐	☐ (0)	
		☐	☐	☐	☐	☐ (0)	
		☐	☐	☐	☐	☐ (0)	

The Table above is a guide. Refer to the referenced Addendum for specific information.

ATTACH TO CONTRACT DOCUMENTS
THE CITY OF NEW YORK

DEPARTMENT OF DESIGN AND CONSTRUCTION
INFRASTRUCTURE DIVISION
BUREAU OF DESIGN

PROJECT ID: SANDRESM1

INSTALLATION OF EAST SIDE COASTAL RESILIENCY FROM MONTGOMERY STREET TO EAST 15TH STREET TOGETHER WITH ALL WORK INCIDENTAL THERETO

BOROUGH OF MANHATTAN

ADDENDUM NO. 4

DATED: 1/15/2021
THIS ADDENDUM IS HEREBY MADE A PART OF THE CONTRACT DOCUMENTS

1. **Refer** to Volume 1 of 3 Bid Schedule, Pages B-3 through B-150
   Delete B-3 through B-150 in their entirety
   Substitute with attached revised pages B-3 [Revision #1] through B-150 [Revision #1]
   Note See Attachment B for list of changes
   [Number of attachments: 1 attachment and 148 pages of Bid Schedule]

2. **Refer** to Volume 3 of 3
   Incorporate the attached revised specifications as detailed in Attachment C.
   [Number of attachments: 1 attachment and 16 pages of specifications]

3. For additional information see the attached pages of "Questions Submitted by Bidders and DDC's Responses".
   [Number of attachments: 1 page of Questions and Responses]

Note the convention for SANDRESM1 Addenda. Not all Addenda will have all attachments.
Attachment A – Non-Bid Schedule Changes to Volume 1
Attachment B – Changes to Bid Schedule (Volume 1)
Attachment C – Changes to Specifications (Volumes 2 and 3)
Attachment D – Changes to Drawings

END OF ADDENDUM NO. 4

By signing in the space provided below, the bidder acknowledges receipt of this Addendum consisting of one (1) page and One Hundred Sixty-Eight (167) pages of attachments.

THIS ADDENDUM MUST BE SIGNED BY ALL BIDDERS AND ATTACHED TO THEIR BID

Richard Jones, P.E. CWI CDT
Executive Director

IPC Resiliency Partners
Name of Bidder

By:

Attachment B

Type of Change	Item Changed
Revised Quantity	
New Item	51.21LB14000V
Removed Item	51.11P004.B14

Attachment C - Revisions to Specifications

	Refer to These Parts of the Contract Books			Changes		Description of Changes
#	Volume	Package	Section	Remove Page(s)	Insert Page(s)	
1	3	HUD-Pages	Davis-Bacon Wage Rates	1 through 16	1 through 16	Updated Davis Bacon Wage Rate sheets
2						
3						
4						
5						
6						
7						
8						

The descriptions above are only a guide. The actual text of the specifications governs.

Addendum	Addendum Question No.	Bidder's Question	Response
4	1	Specification Section PK-ESCR 907 states that the fish cleaning table shall be fabricated by Forms+Surfaces. After speaking with the Contact person Jason Bajor, he informed me that they were “unable to locate vendors willing to provide the necessary rolled perimeter tubing. Therefore, we will not be able to provide a quote for this table. If the Landscape Architect is willing to redesign the table we could revisit this, but unfortunately we must pass on this request.” Is the Landscape Architect willing to redesign the table, or is there a different fabricator that we could use for this item?	The table as designed has previously been fabricated by Forms +Surfaces and other manufacturers. If the bidder is not able to provide a quote from this manufacturer or the manufacture no longer produces the table, then the bidder must provide a bid price based on a alternate manufacturer that will qualify as an “approved equal” as noted in the specification.
4	2	Based on the naming conventions of the bid documents the files “Riis_Test Borings 2” and “Riis_Test Borings 3” appear to be missing. Please provide these files.	These are historic borings dated 1945. Were are not able to locate sheets 2 and 3. Please note that sheets 4 and 5 have historic borings around the 10th Street area.
4	3	At this time, bidders cannot reasonably quantify the nature and/or extent of potentially adverse impacts to the Project due to the ongoing COVID-19 pandemic. With that as a backdrop: a. Can bidders be permitted to qualify their bids to exclude adverse schedule and cost impacts due to the COVID-19 pandemic? b. Can the NYCDDC confirm that it will grant additional time and cover the Contractor’s actual increased costs incurred due to adverse impacts caused by the COVID-19 pandemic? If not, what relief will the NYCDDC afford to the Contractor in the event of adverse schedule and/or cost impacts due to the COVID-19 pandemic?	a. No. b. No. Any delays and/or impacts that occur during the contract term will depend on the facts and circumstances at the time of the request and will be reviewed in accordance with the NYC Standard Construction Contract.
4	4	Please refer to contract drawings DS301. MH-B14 is bubbled from the previous bid documents and calls out pay item 51.21LB14000V. The current bid schedule does not include this pay item number. Please clarify.	51.21LB14000V is the correct item number for MH-B14 as shown on drawing DS301. See revised Bid Schedule, Addendum 4, Article 1.
4	5	Please refer to contract drawings DS102. Regulator M-24 is called out to be flood proofed and pay under item number 51.71C00M24. The current bid schedule does not include this pay item number. Please clarify	The revised drawing, DS102, will be provided post bid. Item 51.71C00M24 is not required. The bid item no. and flood proofing language callout will be removed from drawing DS102.
4	6	Please refer to contract drawing DS302. Note 2 states " For regulator strengthening, and modification schedule see sheets DS110 through DS111. Drawing DS110 is the Reach K civil demolition plan and sheet DS111 does not exist. Please advise.	The revised drawings will be provided post bid. Note No. 2 is no longer valid. Note 2 will be removed on all DS300 series drawings.
4	7	Please refer to contract drawing CU310. A note points to what looks like a detailed section of work, and states "Utility See Table CU310" There is no detail plan of this work on drawing CU310. Please clarify.	The callout "UTILITY SEE TABLE CU310" on sheet CU310 will be removed. A revised drawing CU310 will be included in the conformed set.
4	8	Please refer to drawing ESC117. No existing contours have been provided for Reach J. Please provide existing contours for this area.	Drawing ESC117 provides existing spot grades on the Phase 2 A plan view. Contours can also be found on the survey drawings provided in Appendix A, or refer to various landscape drawings.
4	9	Please confirm Items PK-ESCR 943 Bollards, the concrete base is paid under this item	PK-ESCR 943 includes concrete as indicated in the measurement and payment section of the specification.
4	10	Please confirm Items PK-ESCR 811 Concrete pavers the concrete base is paid under this item	PK-ESCR 811 includes concrete base as indicated in the measurement and payment section of the specification.
4	11	Please confirm Items PK-ESCR 50A and 50B. Canopy Area 1 and Area 2 8’ H fence and gates showing on drawings A-101.01 and A250.01 are paid under the LS item	No, the fences and gates are paid under the following bid items: PK-ESCR 032 STEEL SLAT DOUBLE SWING GATE, 8'-0" HT., 35'-0" W. PK-ESCR 200 STEEL SLAT ROLLING GATE, 8'-0" HT., 25'-0" W. PK-ESCR 947 STEEL SLAT PRIVACY FENCE M&O
4	12	Please confirm Items PK-ESCR 50A and 50B. Canopy Area 1 and Area 2. Excavation, backfill, concrete, rebar and electrical are included in the LS item	Excavation, backfill, concrete, and rebar are included in the Lump Sum items for PK-ESCR 50A and 50B. Electrical is included in PK-ESCR 653 ELECTRICAL, LIGHTING AND PV WORK FOR M&O AREA 1 CANOPY and PK-ESCR 654 ELECTRICAL, LIGHTING AND PV WORK FOR M&O AREA 2 CANOPY
4	13	Please confirm Items PK-ESCR 501, 502 and 503 Excavation, backfill, concrete, rebar and Mechanical, electrical and plumbing are included in the LS item	Yes, PK-ESCR 501, 502, 503 include the referenced elements as indicated in the measurement and payment section of the specifications.
4	14	Please confirm Items PK-ESCR 943C Excavation, backfill, concrete and rebar are included in the LS item	Yes, PK-ESCR 943C includes the referenced elements as indicated in the measurement and payment section of the specifications.
4	15	Could you please provide a manufacturer(s) for item PK-ESCR 049 M+O PRE-FABRICATED BUILDING?	Manufacturers are listed in specification Section 13 34 70 of the Buildings Pages 2.1 Manufacturer
4	16	Regarding this: The bidder must, within the last ten (10) consecutive years prior to the bid opening, have successfully completed in a timely fashion at least two (2) projects with a construction value greater than $400,000,000 for each individual project Can those projects have been completed as Joint Ventures where [the bidder] was the lead member of the JV?	Yes.
4	17	Regarding this: The bidder must have had at least One Billion ($1,000,000,000) in annual gross revenue for the prior fiscal year resulting from general construction work and specialty engineering work Could that apply to a Joint Venture entity bidding SANDRESM1?	Yes.

CITY OF NEW YORK
DEPARTMENT OF DESIGN AND CONSTRUCTION
DIVISION OF INFRASTRUCTURE

ADDENDA CONTROL SHEET

BID SUBMISSION DATE / TIME: **February 8, 2021, 8:30 AM – 11:00 AM**
BID OPENING DATE/ TIME: **February 8, 2021, 11:30 AM**

PROJECT NO.: **SANDRESM1**

DESCRIPTION: **INSTALLATION OF EAST SIDE COASTAL RESILIENCY FROM MONTGOMERY STREET TO EAST 15TH STREET**

Addendum		Addendum Contains:					
No.	Date	Revised Bid Date/Time	Revised Bid Schedule	Questions & Responses	Additional Amendments	Drawings (number)	General Counsel Approval
1	12/28/2020	☐	☐	☐	☒	☐ (0)	
2	12/31/2020	☐	☐	☐	☒	☒ (88)	
3	1/11/2021	☐	☐	☐	☒	☐ (0)	
4	1/15/2021	☐	☒	☒	☒	☐ (0)	
5	1/22/2021	☐	☐	☒	☒	☒ (3)	
6		☐	☐	☐	☐	☐ (0)	
7		☐	☐	☐	☐	☐ (0)	
8		☐	☐	☐	☐	☐ (0)	
		☐	☐	☐	☐	☐ (0)	
		☐	☐	☐	☐	☐ (0)	
		☐	☐	☐	☐	☐ (0)	
		☐	☐	☐	☐	☐ (0)	

The Table above is a guide. Refer to the referenced Addendum for specific information.

ATTACH TO CONTRACT DOCUMENTS
THE CITY OF NEW YORK

DEPARTMENT OF DESIGN AND CONSTRUCTION
INFRASTRUCTURE DIVISION
BUREAU OF DESIGN

PROJECT ID: SANDRESM1

INSTALLATION OF EAST SIDE COASTAL RESILIENCY FROM MONTGOMERY STREET TO EAST 15TH STREET TOGETHER WITH ALL WORK INCIDENTAL THERETO

BOROUGH OF MANHATTAN

ADDENDUM NO. 5

DATED: 1/22/2021
THIS ADDENDUM IS HEREBY MADE A PART OF THE CONTRACT DOCUMENTS

1. **Refer** to Volume 3 of 3 ;
   Incorporate the attached revised specifications as detailed in Attachment C.
   [Number of attachments: 1 attachment and 68 pages of specifications]

2. **Refer** to the list of the Drawings in Attachment D;
   Incorporate the revised drawings notes as detailed in Attachment D.
   Replace the contract drawing marked with status "Replacement" in the attached drawings list;
   [Number of attachments: 1 attachment; Number of drawings: 3]

3. For additional information see the attached pages of "Questions Submitted by Bidders and DDC's Responses".
   [Number of attachments: 1 page of Questions and Responses]

Note the convention for SANDRESM1 Addenda. Not all Addenda will have all attachments.
Attachment A – Non-Bid Schedule Changes to Volume 1
Attachment B – Changes to Bid Schedule (Volume 1)
Attachment C – Changes to Specifications (Volumes 2 and 3)
Attachment D – Changes to Drawings

END OF ADDENDUM NO. 5

By signing in the space provided below, the bidder acknowledges receipt of this Addendum consisting of one (1) page and Seventy-Four (74) pages of attachments.

THIS ADDENDUM MUST BE SIGNED BY ALL BIDDERS AND ATTACHED TO THEIR BID

Richard Jones, P.E. CWI CDT
Executive Director

IPC Resiliency Partners
Name of Bidder

By:

Attachment C - Revisions to Specifications

	Refer to These Parts of the Contract Books			Changes		Description of Changes
#	Volume	Package	Section	Remove Page(s)	Insert Page(s)	
1	3	HUD-Pages	Whole Package	HUD -1 to HUD - 64	HUD -1R to HUD - 66R	1. Updated UNIFORM FEDERAL CONTRACT PROVISIONS RIDER FOR FEDERALLY FUNDED PROCUREMENT CONTRACTS 2. Updated CDBG RIDER
2						
3						
4						
5						
6						
7						
8						

The descriptions above are only a guide. The actual text of the specifications governs.

Addendum 5 Attachment D

	Revised Notes on Drawings			
	Refer to These Drawings		Changes	
#	Drawing	Part of Drawing	Replace	Incorporate
1	BD208 and BT198	LIST OF STANDARD DRAWINGS Table	Callout of Drawing No. H-1011	NYCDOT Standard Drawing H-1011 (Sidewalk Pedestrian Ramps) dated 7/1/10, is no longer to be used for the purpose of determining geometry, dimensions, and tolerances for construction of sidewalk pedestrian ramps. NYSDOT Standard Sheet 608-01 (Pedestrian Facilities) must be used for determining geometry, dimensions, and tolerances for the construction of sidewalk pedestrian ramps, except that Type 8 must not be used. All requirements of the NYCDOT Standard Highway Specifications will still apply; this does not mandate or allow the use of any NYSDOT Standard Specifications as an alternate, unless specifically called for in the contract documents.
2				
3				

	Drawing Sheet	
#	Sheet	New or Replacement
1	PUE301	Replacement
2	PUE302	Replacement
3	PUE702	Replacement

Addendum	Addendum Question No.	Bidder's Question	Response
5	1	Specification section PK-ESCR 184 – Tennis Court Accessories Set says to reference the plans for the post and fittings. However, there are no drawings containing these items. The specifications also say to conform to NYCDOT Standard Highway Specifications and DPR Standard Detail Sheet 'Tennis Court Layout & Details'. The NYCDOT Standard Highway specifications do not contain any information about these tennis court items, and we were unable to find the DPR Standard Detail Sheet 'Tennis Court Layout & Details'. Could you please provide us with plans and specifications for these posts and fittings for the tennis courts?	Drawing LD001 includes the list of DPR Standard Details that identifies the sheet, name, number and issuance date for the 'Tennis Court Layout and Details" and also see legend. Drawing LD751 calls out details 2-9 on sheet 47 of the Parks Standard Detail Sheets.
5	2	On Drawing A503 (dwg #2374), Track & Field Building RCP, there is a note that identifies sprinklers throughout the structure and to "refer to Fire Protection Drawings". However, there are no sprinkler drawings in the package for this building, or any other on this project. Please identify where the sprinkler drawings are for this structure.	Please see F-500 series drawings for the fire sprinklers for the Track and Field Building and FA-500 series drawings for the fire alarm system.
5	3	Is a PASSPort account required for newly formed Joint Ventures that do not have an EIN?	No. Each firm should register individually in Passport. If the JV wins the bid, then we will require JV registration with EIN in Passport.
5	4	Is there a specific form that should be used for projects submitted under this section [Vol. I, Page A-7, (A) Special Experience Requirements for the Bidder], or should bidders use the Qualification Form on Page A-41?	The Qualification Form on page A-41 should be used.
5	5	Is there a specific form that needs to be completed/signed for the $1 billion annual gross revenue requirement? [Vol. I, Page A-8, (A) Special Experience Requirements for the Bidder]	There is no specific form.
5	6	Is there a specific form that should be used for projects submitted under this section [Vol. I, Page A-8, (B) Special Experience Requirements for Specific Areas of Work], or should bidders use the Qualification Form on Page A-41?	The Qualification Form on page A-41 should be used.

CITY OF NEW YORK
DEPARTMENT OF DESIGN AND CONSTRUCTION
DIVISION OF INFRASTRUCTURE

ADDENDA CONTROL SHEET

BID SUBMISSION DATE / TIME: **February 8, 2021, 8:30 AM – 11:00 AM**
BID OPENING DATE/ TIME: **February 8, 2021, 11:30 AM**

PROJECT NO.: **SANDRESM1**

DESCRIPTION: **INSTALLATION OF EAST SIDE COASTAL RESILIENCY FROM MONTGOMERY STREET TO EAST 15TH STREET**

Addendum		Addendum Contains:					
No.	Date	Revised Bid Date/Time	Revised Bid Schedule	Questions & Responses	Additional Amendments	Drawings (number)	General Counsel Approval
1	12/28/2020	☐	☐	☐	☒	☐ (0)	
2	12/31/2020	☐	☐	☐	☒	☒ (88)	
3	1/11/2021	☐	☐	☐	☒	☐ (0)	
4	1/15/2021	☐	☒	☒	☒	☐ (0)	
5	1/22/2021	☐	☐	☒	☒	☒ (3)	
6	1/29/2021	☐	☐	☒	☒	☒ (2)	
7		☐	☐	☐	☐	☐ (0)	
8		☐	☐	☐	☐	☐ (0)	
		☐	☐	☐	☐	☐ (0)	
		☐	☐	☐	☐	☐ (0)	
		☐	☐	☐	☐	☐ (0)	
		☐	☐	☐	☐	☐ (0)	

The Table above is a guide. Refer to the referenced Addendum for specific information.

ATTACH TO CONTRACT DOCUMENTS
THE CITY OF NEW YORK

DEPARTMENT OF DESIGN AND CONSTRUCTION
INFRASTRUCTURE DIVISION
BUREAU OF DESIGN

PROJECT ID: SANDRESM1

INSTALLATION OF EAST SIDE COASTAL RESILIENCY FROM MONTGOMERY STREET TO EAST 15TH STREET TOGETHER WITH ALL WORK INCIDENTAL THERETO

BOROUGH OF MANHATTAN

ADDENDUM NO. 6

DATED: 1/29/2021
THIS ADDENDUM IS HEREBY MADE A PART OF THE CONTRACT DOCUMENTS

1. **Refer** to Volume 3 of 3 ;
   Incorporate the attached revised specifications as detailed in Attachment C.
   [Number of attachments: 1 attachment and 1 page of specifications]

2. **Refer** to the list of the Drawings in Attachment D;
   Incorporate the contract drawing marked with status "New" in Attachment D.
   [Number of attachments: 1 attachment; Number of drawings: 2]

3. For additional information see the attached pages of "Questions Submitted by Bidders and DDC's Responses".
   [Number of attachments: 1 page of Questions and Responses]

Note 1: The scheduled bid date will not be postponed. Postponement requests will not be granted.
Note 2: The deadline for submission of pre-bid questions has passed. It was January 19, 2021 at 8:00 AM

Note the convention for SANDRESM1 Addenda. Not all Addenda will have all attachments.
Attachment A – Non-Bid Schedule Changes to Volume 1
Attachment B – Changes to Bid Schedule (Volume 1)
Attachment C – Changes to Specifications (Volumes 2 and 3)
Attachment D – Changes to Drawings

END OF ADDENDUM NO. 6

By signing in tbe space provided below, the bidder acknowledges receipt of this Addendum consisting of one (1) page and Six (6) pages of attachments.

THIS ADDENDUM MUST BE SIGNED BY ALL BIDDERS AND ATTACHED TO THEIR BID

Richard Jones, P.E. CWI CDT
Executive Director

IPC Resiliency Partners
Name of Bidder

By:

Attachment C - Revisions to Specifications

	Refer to These Parts of the Contract Books			Changes		Description of Changes
#	Volume	Package	Section	Remove Page(s)	Insert Page(s)	
1	3	Table of Contents	N/A	i	iR	Table of Contents Updated
2						
3						
4						
5						
6						
7						
8						

The descriptions above are only a guide. The actual text of the specifications governs.

Addendum 6 Attachment D

	Drawing Sheet	
#	Sheet	New or Replacement
1	BC003	New
2	BC004	New

Addendum	Addendum Question No.	Bidder's Question	Response
6	1	Due to the complex nature of the scope of work and working through these special circumstances with COVID19 which make interacting with potential subcontractors and suppliers more difficult and results in time delays, we respectfully request a six week extension to the bid date so that we can prepare a responsible and responsive proposal to the Prime bidders.	The bid date will not be changed.
6	2	Reference Corlears Hook Bridge Drawings. Sheets 107 and 108 (BC003 and BC004) are not included in this set of Drawings provided.	Refer to Addendum 6, Article 2.
6	3	Reference Drawing BC140 (150/2791): Corlears Hook Bridge Deck Sections. Under what Pay Item are the costs for the 1'8"W x 1'6"H Curbs on the bridge deck to be included ?	Curb (Parapet) shall be paid under Item 555.09, as shown on drawing BC140, Section C - DECK FASCIA SECTION.
6	4	Reference Drawing BC101 (110/2791): Corlears Hook Bridge Demolition Plan and Section 1 of 2. This drawing, as produced in the documents provided by NYC DDC, was apparently not scanned properly and portrays at a skew. Please provide a proper reproduction of this drawing.	There is no problem with drawing BC101 as provided by DDC.

Department of Design and Construction

DIVISION OF INFRASTRUCTURE
BUREAU OF DESIGN

VOLUME 1 OF 3

PROJECT ID: SANDRESM1

INSTALLATION OF EAST SIDE COASTAL RESILENCY FROM MONTGOMERY STREET TO EAST 15TH STREET

TOGETHER WITH ALL WORK INCIDENTAL THERETO

INCLUDING FLOOD PROTECTION SYSTEM, ROLLER AND SWING GATES, PARK RECONSTRUCTION, SEWER, PEDESTRIAN BRIDGES, PARK, BUILDINGS, GROUND IMPROVEMENT, STREET LIGHTING AND TRAFFIC WORK

Together With All Work Incidental Thereto
BOROUGH OF MANHATTAN
CITY OF NEW YORK

_____

Contractor

Dated_____**, 20**_____

Department of Design and Construction

THE CITY OF NEW YORK
DEPARTMENT OF DESIGN AND CONSTRUCTION
DIVISION OF INFRASTRUCTURE
30-30 THOMSON AVENUE
LONG ISLAND CITY, NY, 11101
TEL: 718.391.1000
WEB: www.nyc.gov/ddc

DDC SPONSOR AGENCY:

NEW YORK CITY DEPARTMENT OF PARKS AND RECREATION

PREPARED BY:

AKRF / KSE JV

DATE PREPARED:

DECEMBER 16, 2020

VOLUME 2 OF 3

FOR FURNISHING ALL LABOR AND MATERIALS NECESSARY AND REQUIRED FOR:

PROJECT ID: SANDRESM1

INFORMATION FOR BIDDERS
CONTRACT
PERFORMANCE AND PAYMENT BONDS
PREVAILING WAGE SCHEDULE

FOR FURNISHING ALL LABOR AND MATERIALS NECESSARY AND REQUIRED FOR:

INSTALLATION OF EAST SIDE COASTAL RESILENCY FROM MONTGOMERY STREET TO EAST 15TH STREET

INCLUDING FLOOD PROTECTION SYSTEM, ROLLER AND SWING GATES, PARK RECONSTRUCTION, SEWER, PEDESTRIAN BRIDGES, PARK, BUILDINGS, GROUND IMPROVEMENT, STREET LIGHTING AND TRAFFIC WORK

TOGETHER WITH ALL WORK INCIDENTAL THERETO

BOROUGH OF MANHATTAN

CITY OF NEW YORK

HUD FUNDED

CITY OF NEW YORK

DEPARTMENT OF
DESIGN AND CONSTRUCTION
DIVISION OF INFRASTRUCTURE

INFORMATION FOR BIDDERS

JULY 2019

(NO TEXT ON THIS PAGE)

CITY OF NEW YORK CITY
DEPARTMENT OF DESIGN AND CONSTRUCTION
INFORMATION FOR BIDDERS

TABLE OF CONTENTS

SECTION 1.	DESCRIPTION AND LOCATION OF WORK	1
SECTION 2.	TIME AND PLACE FOR RECEIPT OF BIDS	1
SECTION 3.	DEFINITIONS	1
SECTION 4.	INVITATION FOR BIDS AND CONTRACT DOCUMENTS	1
SECTION 5.	PRE-BID CONFERENCE	2
SECTION 6.	AGENCY CONTACT	2
SECTION 7.	BIDDER'S OATH	2
SECTION 8.	EXAMINATION AND VIEWING OF SITE, CONSIDERATION OF OTHER SOURCES OF INFORMATION AND CHANGED CONDITIONS	2
SECTION 9.	EXAMINATION OF PROPOSED CONTRACT	3
SECTION 10.	FORM OF BID	3
SECTION 11.	IRREVOCABILITY OF BID	3
SECTION 12.	ACKNOWLEDGMENT OF AMENDMENTS	4
SECTION 13.	BID SAMPLES AND DESCRIPTIVE LITERATURE	4
SECTION 14.	PROPRIETARY INFORMATION/TRADE SECRETS	4
SECTION 15.	PRE-OPENING MODIFICATION OR WITHDRAWAL OF BIDS	4
SECTION 16.	BID EVALUATION AND AWARD	4
SECTION 17.	LATE BIDS, LATE WITHDRAWALS AND LATE MODIFICATIONS	5
SECTION 18.	WITHDRAWAL OF BIDS.	5
SECTION 19.	MISTAKE IN BIDS	5
SECTION 20.	LOW TIE BIDS	6
SECTION 21.	REJECTION OF BIDS	6
SECTION 22.	RIGHT TO APPEAL DETERMINATIONS OF NON-RESPONSIVENESS OR NON-RESPONSIBILITY AND RIGHT TO PROTEST SOLICITATIONS AND AWARD	7
SECTION 23.	AFFIRMATIVE ACTION AND EQUAL EMPLOYMENT OPPORTUNITY	7
SECTION 24.	PASSPORT COMPLIANCE	7
SECTION 25.	COMPLAINTS ABOUT THE BID PROCESS	8
SECTION 26.	BID, PERFORMANCE AND PAYMENT SECURITY	8
SECTION 27.	FAILURE TO EXECUTE CONTRACT	9
SECTION 28.	BIDDER RESPONSIBILITIES AND QUALIFICATIONS	9
SECTION 29.	EMPLOYMENT REPORT	10
SECTION 30.	LABOR LAW REQUIREMENTS	10
SECTION 31.	INSURANCE	10
SECTION 32.	LUMP SUM CONTRACTS	11
SECTION 33.	UNIT PRICE CONTRACTS	11
SECTION 34.	EXCISE TAX	11
SECTION 35.	LICENSES AND PERMITS	11
SECTION 36.	MULTIPLE PRIME CONTRACTORS	11
SECTION 37.	LOCALLY BASED ENTERPRISE REQUIREMENTS (LBE)	12
SECTION 38.	BID SUBMISSION REQUIREMENTS	13
SECTION 39.	COMPTROLLER'SCERTIFICATE	14
SECTION 40.	PROCUREMENT POLICY BOARD RULES	14
SECTION 41.	VIEWING OF SUBMITTED BID DOCUMENTS	14
SECTION 42.	DDC SAFETY REQUIREMENTS	14

(NO TEXT ON THIS PAGE)

INFORMATION FOR BIDDERS

1. Description and Location of Work

The description and location of the work for which bids are requested are specified in Attachment 1, "Bid Information". Attachment 1 is included in the BID BOOKLET, VOLUME 1 OF 3.

2. Time and Place for Receipt of Bids

Sealed bids shall be received on or before the date and hour specified in Attachment 1, at which time they will be publicly opened and read aloud in the presence of the Commissioner or his or her representative, and any bidders who may desire to be present.

3. Definitions

The definitions set forth in the Procurement Policy Board Rules shall apply to this Invitation For Bids.

4. Invitation For Bids and Contract Documents

(A) Except for titles, sub-titles, headings, running headlines, tables of contents and indices (all of which are printed herein merely for convenience) the following, except for such portions thereof as may be specifically excluded, shall be deemed to be part of the Contract and the Invitation for Bids.

(1) All provisions required by law to be inserted in this Contract, whether actually inserted or not
(2) The Contract Drawings and Specifications
(3) The General Conditions, the General Requirements and the Special Conditions, if any
(4) The Contract
(5) The Information for Bidders; Request for Proposals; Notice of Solicitation and Proposal For Bids; Bid or Proposal, and, if used, the Bid Booklet
(6) The Budget Director's Certificate; all Addenda issued prior to the receipt of the bids; the Notice of Award; Performance and Payment Bonds, if required; and the Notice to Proceed with the Work.

(B) For particulars as to this procurement, including quantity and quality of the purchase, extent of the work or labor to be performed, delivery and performance schedule, and any other special instructions, prospective bidders are referred to the Invitation For Bids Documents. A copy of such documents can be obtained at the location set forth in Attachment 1.

(C) Deposit for Copy of Invitation For Bids Documents: Prospective bidders may obtain a copy of the Invitation For Bids Documents by complying with the conditions set forth in the Notice of Solicitation. The deposit must be in the form of a check or money order made payable to the City of New York, and drawn upon a state or national bank or trust company, or a check of such bank or trust company signed by a duly authorized officer thereof.

(D) Return of Invitation For Bids Documents: All Invitation For Bids Documents must be returned to the Department upon request. If the bidder elects not to submit a bid thereunder, the

Invitation For Bids Documents shall be returned to the Department, along with a statement that no bid will be submitted.

(E) Return of Deposit: Such deposit will be returned within 30 days after the award of the contract or the rejection of all bids as set forth in the advertisement, provided the Invitation For Bids Documents are returned to the location specified in Attachment 1, in physical condition satisfactory to the Commissioner.

(F) Additional Copies: Additional copies of the Invitation For Bids Documents may be obtained, subject to the conditions set forth in the advertisement for bids.

5. Pre-Bid Conference

A pre-bid conference shall be held as set forth in Attachment 1. Nothing stated at the pre-bid conference shall change the terms or conditions of the Invitation For Bids Documents, unless a change is made by written amendment as provided in Section 9 below. Failure to attend a mandatory pre-bid conference shall constitute grounds for the rejection of the bid.

6. Agency Contact

Any questions or correspondence relating to this bid solicitation shall be addressed to the Agency Contact person specified in Attachment 1.

7. Bidder's Oath

(A) The bid-shall be properly signed by an authorized representative of the bidder and the bid shall be verified by the written oath of the authorized representative who signed the bid, that the several matters stated and information furnished therein are in all aspects true.

(B) A materially false statement willfully or fraudulently made in connection with the bid or any of the forms completed and submitted with the bid may result in the termination of any Contract between the City and the Bidder. As a result, the Bidder may be barred from participating in future City contracts as well as be subject to possible criminal prosecution.

8. Examination and Viewing of Site

(A) Pre-Bidding (Investigation) Viewing of Site -Bidders must carefully view and examine the site of the proposed work, as well as its adjacent area, and seek other usual sources of information, for they will be conclusively presumed to have full knowledge of any and all conditions on, about or above the site relating to or affecting in any way the performance of the work to be done under the Contract which were or should have been indicated to a reasonably prudent bidder. To arrange a date for visiting the work site, bidders are to contact the Agency Contact person specified in Attachment 1.

(B) Should the contractor encounter during the progress of the work subsurface conditions at the site materially differing from any shown on the Contract Drawings or indicated in the Specifications or such subsurface conditions as could not reasonably have been anticipated by the contractor and were not anticipated by the City, which conditions will materially affect the cost of the work to be done under the

Contract, the attention of the Commissioner must be called immediately to such conditions before they are disturbed. The Commissioner shall thereupon promptly investigate the conditions. If he finds that they do so materially differ, or that they could not have been reasonably anticipated by the contractor and were not anticipated by the City, the Contract may be modified with his written approval.

9. Examination of Proposed Contract

(A) Request for Interpretation or Correction: Prospective bidders must examine the Contract Documents carefully and before bidding must request the Commissioner in writing for an interpretation or correction of every patent ambiguity, inconsistency or error therein which should have been discovered by a reasonably prudent bidder. Such interpretation or correction, as well as any additional contract provisions the Commissioner may decide to include, will be issued in writing by the Commissioner as an addendum to the Contract, which will be transmitted to each person recorded as having received a copy of the Contract Documents from the Department. Transmission of such addendum will be by mail, e-mail, facsimile or hand delivery. Such addendum will also be posted at the place where the Contract Documents are available for the inspection of prospective bidders. Upon transmission as provided for herein, such addendum shall become a part of the Contract Documents, and binding on all bidders, whether or not actual notice of such addendum is shown.

(B) Only Commissioner's Interpretation or Correction Binding: Only the written interpretation or correction so given by the Commissioner shall be binding, and prospective bidders are warned that no other officer, agent or employee of the City is authorized to give information concerning, or to explain or interpret, the Contract.

(C) Documents given to a subcontractor for the purpose of soliciting the subcontractor's bid shall include either a copy of the bid cover sheet or a separate information sheet setting forth the project name, the Contract number (if available), the contracting agency and the Project's location.

10. Form of Bid

Each bid must be submitted upon the prescribed form and must contain: a) the name, residence and place of business of the person or persons making the same; b) the names of all persons interested therein, and if no other person is so interested, such fact must be distinctly stated; c) a statement to the effect that it is made without any connection with any other person making a bid for the same purpose and that it is in all respects fair and without collusion or fraud; d) a statement that no Council member or other officer or employee or person whose salary is payable in whole or part from the City Treasury is directly or indirectly interested therein or in the supplies, materials or equipment and work or labor to which it relates, or in any portion of the profits thereof; e) a statement that the bidder is not in arrears to the City or to any agency upon a debt or contract or taxes, and is not a defaulter as surety or otherwise upon any obligation to the City to any agency thereof, except as set forth in the bid.

THE BID SHALL BE TYPEWRITTEN OR WRITTEN LEGIBLY IN INK. THE BID SHALL BE SIGNED IN INK. ERASURES OR ALTERATIONS SHALL BE INITIALED BY THE SIGNER IN INK. FAILURE TO CONFORM TO THE REQUIREMENTS OF THIS SECTION 10 SHALL RESULT IN THE REJECTION OF THE BID.

11. Irrevocability of Bid

The prices set forth in the bid cannot be revoked and shall be effective until the award of the Contract, unless the bid is withdrawn as provided for in Sections 15 and 18 below.

12. Acknowledgment of Amendments

The receipt of any amendment to the Contract Documents shall be acknowledged by the bidder in its bid submission.

13. Bid Samples and Descriptive Literature

Bid samples and descriptive literature shall not be submitted by the bidder, unless expressly requested elsewhere in the Contract or Contract Documents. Any unsolicited bid samples or descriptive literature which are submitted shall not be examined or tested and shall not be deemed to vary any of the provisions of this Contract.

14. Proprietary Information/Trade Secrets

(A) The bidder shall identify those portions of the bid which it deems to be confidential, proprietary information or trade secrets, and provide justification why such materials shall not be disclosed by the City. All such materials shall be clearly indicated by stamping the pages on which such information appears, at the top and bottom thereof with the word "Confidential". Such materials stamped "Confidential" must be easily separable from the non-confidential sections of the bid.

(B) All such materials so indicated shall be reviewed by the Agency and any decision not to honor a request for confidentiality shall be communicated in writing to the bidder. For those bids which are unsuccessful, all such confidential materials shall be returned to the bidder. Prices, makes and model or catalog numbers of the items offered, deliveries, and terms of payment shall be publicly available after bid opening, regardless of any designation of confidentiality made by the bidder.

15. Pre-Opening Modification or Withdrawal of Bids

Bids may be modified or withdrawn by written notice received in the office designated in Attachment 1, before the time and date set for the bid opening. If a bid is withdrawn in accordance with this Section, the bid security, if any, shall be returned to the bidder.

16. Bid Evaluation and Award

In accordance with the New York City Charter, the Procurement Policy Board Rules and the terms and conditions of this Invitation For Bids, this Contract shall be awarded, if at all, to the responsible bidder whose bid meets the requirements and evaluation criteria set forth in the Invitation For Bids, and whose bid price is either the most favorable bid price or, if the Invitation For Bids so states, the most favorable evaluated bid price. A bid may not be evaluated for any requirement or criterion that is not disclosed in the Invitation For Bids.

Restriction: No negotiations with any bidder shall be allowed to take place except under the circumstances and in the manner set forth in Section 21. Nothing in this Section shall be deemed to permit a contract award to a bidder submitting a higher quality item than that designated in the Invitation For Bids, if that bid is not also the most favorable bid.

17. Late Bids, Late Withdrawals and Late Modifications

Any bid received at the place designated in the solicitation after the time and date set for receipt of bids is late and shall not be considered. Any request for withdrawal or modification received at the place designated in the solicitation after the time and date set for receipt of bids is late and shall not be considered. The exception to this provision is that a late modification of a successful bid that makes the bid terms more favorable to the City shall be considered at any time it is received.

18. Withdrawal of Bids.

Except as provided for in Section 15, above, a bidder may not withdraw its bid before the expiration of forty-five (45) days after the date of the opening of bids; thereafter, a bidder may withdraw its bid only in writing and in advance of an actual award. If within sixty (60) days after the execution of the Contract, the Commissioner fails to fix the date for commencement of work by written notice to the bidder, the bidder, at his option, may ask to be relieved of his obligation to perform the work called for by written notice to the Commissioner. If such notice is given to the Commissioner, and the request to withdraw is granted, the bidder waives all claims in connection with this Contract.

19. Mistake in Bids

(A) Mistake Discovered Before Bid Opening: A bidder may correct mistakes discovered before the time and date set for bid opening by withdrawing or correcting the bid as provided in Section 15 above.

(B) Mistakes Discovered Before Award

(1) In accordance with General Municipal Law (Section 103, subdivision 11), where a unilateral error or mistake is discovered in a bid, such bid may be withdrawn upon written approval of the Agency Chief Contracting Officer if the following conditions are met:

(a) The mistake is known or made known to the agency prior to the awarding of the Contract or within 3 days after the opening of the bid, whichever period is shorter; and
(b) The price bid was based upon an error of such magnitude that enforcement would be unconscionable; and
(c) The bid was submitted in good faith and the bidder submits credible evidence that the mistake was a clerical error as opposed to a judgment error; and
(d) The error in the bid is actually due to an unintentional and substantial arithmetic error or an unintentional omission of a substantial quantity of work, labor, material or services made directly in the compilation of the bid, which unintentional arithmetic error or unintentional omission can be clearly shown by objective evidence drawn from inspection of the original work paper, documents, or materials used in the preparation of the bid sought to be withdrawn; and
(e) It is possible to place the agency in the same position as existed prior to the bid.

(2) Unless otherwise required by law, the sole remedy for a bid mistake in accordance with this Article shall be withdrawal of the bid, and the return of the bid bond, or other security, if any, to the bidder. Thereafter, the agency may, in its discretion, award the Contract to the next lowest bidder or rebid the Contract. Any amendment to or reformation of a bid or a Contract to rectify such an error or mistake

therein is strictly prohibited.

(3) If the mistake and the intended correct bid are clearly evident on the face of the bid document, the bid shall be corrected to the intended correct bid and may not be withdrawn. Examples of mistakes that may be corrected are typographical errors, errors in extending unit prices, transposition errors and arithmetical errors.

20. Low Tie Bids

(A) When two or more low responsive bids from responsible bidders are identical in price, meeting all the requirements and criteria set forth in the Invitation For Bids, the Agency Chief Contracting Officer will break the tie in the following manner and order of priority:

(1) Award to a certified New York City small, minority or woman-owned business entity bidder;
(2) Award to a New York City bidder;
(3) Award to a certified New York State small, minority or woman-owned business bidder;
(4) Award to a New York State bidder.

(B) If two or more bidders still remain equally eligible after application of paragraph (A) above, award shall be made by a drawing by lot limited to those bidders. The bidders involved shall be invited to attend the drawing. A witness shall be present to verify the drawing and shall certify the results on the bid tabulation sheet.

21. Rejection of Bids

(A) Rejection of Individual Bids: The Agency may reject a bid if:

(1) The bidder fails to furnish any of the information required pursuant to Section 24 or 28 hereof; or if
(2) The bidder is determined to be not responsible pursuant to the Procurement Policy Board Rules; or if
(3) The bid is determined to be non-responsive pursuant to the Procurement Policy Board Rules; or if
(4) The bid, in the opinion of the Agency Chief Contracting Officer, contains unbalanced bid prices and is thus non-responsive, unless the bidder can show that the prices are not unbalanced for the probable required quantity of items, or if the imbalance is corrected pursuant to Section 15.

(B) Rejection of All Bids: The Agency, upon written approval by the Agency Chief Contracting Officer, may reject all bids and may elect to resolicit bids if in its sole opinion it shall deem it in the best interest of the City so to do.

(C) Rejection of All Bids and Negotiation With All Responsible Bidders: The Agency Head may determine that it is appropriate to cancel the Invitation For Bids after bid opening and before award and to complete the acquisition by negotiation. This determination shall be based on one of the following reasons:

(1) All otherwise acceptable bids received are at unreasonable prices, or only one bid is received and the Agency Chief Contracting Officer cannot determine the reasonableness of the bid price, or no responsive bid has been received from a responsible bidder; or

(2) In the judgment of the Agency Chief Contracting Officer, the bids were not independently arrived at in open competition, were collusive, or were submitted in bad faith.

(D) When the Agency has determined that the Invitation for Bids is to be canceled and that use of negotiation is appropriate to complete the acquisition, the contracting officer may negotiate and award the Contract without issuing a new solicitation, subject to the following conditions:

(1) prior notice of the intention to negotiate and a reasonable opportunity to negotiate have been given by the contracting officer to each responsible bidder that submitted a bid in response to the Invitation for Bids;

(2) the negotiated price is the lowest negotiated price offered by a responsible bidder; and

(3) the negotiated price is lower than the lowest rejected bid price of a responsible bidder that submitted a bid in response to the Invitation for Bids.

22. Right to Appeal Determinations of Non-Responsiveness or Non-Responsibility and Right to Protest Solicitations and Award

The bidder has the right to appeal a determination of non-responsiveness or non-responsibility and has the right to protest a solicitation and award. For further information concerning these rights, the bidder is directed to the Procurement Policy Board Rules.

23. Affirmative Action and Equal Employment Opportunity

This Invitation For Bids is subject to applicable provisions of Federal, State and Local Laws and executive orders requiring affirmative action and equal employment opportunity.

24. PASSPort COMPLIANCE

All vendors that intend to do business with the City of New York must complete a disclosure process in order to be considered for a contract. This disclosure process was formerly completed using Vendor Information Exchange System (VENDEX) paper-based forms. The City of New York has moved collection of vendor disclosure information online. In early August 2017, the New York City Mayor's Office of Contract Services (MOCS) launched the Procurement and Sourcing Solutions Portal (PASSPort), a new online procurement system that replaced the paper-VENDEX process. In anticipation of awards, all bidders must create online accounts in the new PASSPort system, and file all disclosure information using PASSPort. Paper submissions, including certifications of no changes to existing VENDEX packages, will not be accepted in lieu of complete online filings using PASSPort.

All vendors that intend to do business with the City, but specifically those that fall into any of the following categories, are required to enroll:

- Have a pending award with a City Agency; or
- Hold a current contract with a City Agency and have either an expiring VENDEX or expiring Certificate of No Change.

The Department of Design and Construction (DDC) and MOCS hereby notifies all proposers that the PASSPort system is available, and that disclosure filing completion is required prior to any award through this competitive bid.

To enroll in PASSPort and to access the PASSPort website (including online training), please visit www.nyc.gov/passport. Contact MOCS at passport@mocs.nyc.gov for additional information and technical support.

25. Complaints About the Bid Process

The New York City Comptroller is charged with the audit of contracts in New York City. Any vendor who believes that there has been unfairness, favoritism or impropriety in the bid process should inform the Comptroller, Office of Contract Administration, One Centre Street, Room 835, New York, New York; telephone number (212) 669-2323.

26. Bid, Performance and Payment Security

(A) Bid Security: Each bid must be accompanied by bid security in an amount and type specified in Attachment 1 (BID BOOKLET, VOLUME 1 OF 3). The bid security shall assure the City of New York of the adherence of the bidder to its proposal, the execution of the Contract, and the furnishing of Performance and Payment Bonds by the bidder, if required in Attachment 1. Bid security shall be returned to the bidder as follows:

(1) Within ten (10) days after the bid opening, the Comptroller will be notified to return the deposits of all but the three (3) lowest bidders. Within five (5) days after the award, the Comptroller will be notified to return the deposits of the remaining two unsuccessful bidders.
(2) Within five (5) days after the execution of the Contract and acceptance of the Contractor's bonds, the Comptroller will be notified to return the bid security of the successful bidder or, if performance and payment bonds are not required, only after the sum retained under Article 21 of the Contract equals the amount of the bid security.
(3) Where all bids are rejected, the Comptroller will be notified to return the deposit of the three (3) lowest bidders at the time of rejection.

(B) Performance and Payment Security: Performance and Payment Security must be provided in an amount and type specified in Attachment 1 (BID BOOKLET, VOLUME 1 OF 3). The performance and payment security shall be delivered by the contractor prior to or at the time of execution of the Contract. If a contractor fails to deliver the required performance and payment security, its bid security shall be enforced, and an award of Contract may be made to the next lowest responsible and responsive bidder, or the contract may be rebid.

(C) Acceptable Types of Security: Acceptable types of security for bids, performance, and payment shall be limited to the following:

(1) a one-time bond in a form satisfactory to the City;
(2) a bank certified check or money order;
(3) obligations of the City of New York; or
(4) other financial instruments as determined by the Office of Construction in consultation with the Comptroller.

Whenever the successful bidder deposits obligations of the City of New York as performance and payment security, the Comptroller may sell and use the proceeds thereof for any purpose for which the principal or surety on such bond would be liable under the terms of the Contract. If the money is deposited with the Comptroller, the successful bidder shall not be entitled to receive interest on such money from the City.

(D) Form of Bonds: Security provided in the form of bonds must be prepared on the form of bonds authorized by the City of New York. Forms for bid, performance, and payment bonds are included in the Invitation for Bids Documents. Such bonds must have as surety thereunder such surety company or companies as are: (1) approved by the City of New York; (2) authorized to do business in the State of New York, and (3) approved by the Department of the Treasury of the United States. Premiums for any required bonds must be included in the base bid.

The bidder is advised that submission of a bid bond where the surety on such bond fails to meet the criteria set forth herein, shall result in the rejection of the bid as non-responsive.

The Department of the Treasury of the United States advises that information concerning approved surety companies may be obtained as follows: (1) from the Government Printing Office at 215-364-6465; (2) through the Internet at https://www.fiscal.treasury.gov/surety-bonds/.

(E) Power of Attorney: Attorneys in fact who sign bid, performance, or payment bonds must file with each bond a certified copy of their power of attorney to sign said bonds.

27. Failure to Execute Contract

In the event of failure of the successful bidder to execute the Contract and furnish the required security within ten (10) days after notice of the award of the Contract, the deposit of the successful bidder or so much thereof as shall be applicable to the amount of the award made shall be retained by the City, and the successful bidder shall be liable for and hereby agrees to pay on demand the difference between the price bid and the price for which such Contract shall be subsequently awarded, including the cost of any required reletting and less the amount of such deposit. No plea of mistake in such accepted bid shall be available to the bidder for the recovery of the deposit or as a defense to any action based upon such accepted bid. Further, should the bidder's failure to comply with this Section cause any funding agency, body or group (Federal, State, City, Public, Private, etc.) to terminate, cancel or reduce the funding on this project, the bidder in such event shall be liable also to the City for the amount of actual funding withdrawn by such agency on this project, less the amount of the forfeited deposit.

28. Bidder Responsibilities and Qualifications

(A) Bidders must include with their bids all information necessary for a determination of bidder responsibility, as set forth in the Specifications.

(B) The Agency may require any bidder or prospective bidder to furnish all books of account, records, vouchers, statements or other information concerning the bidder's financial status for examination as may be required by the Agency to ascertain the bidder's responsibility and capability to perform the Contract. If required, a bidder must also submit a sworn statement setting forth such information as the Agency may require concerning present and proposed plant and equipment, the personnel and qualifications of his working organizations, prior experience and performance record.

(C) Oral Examination on Qualifications: In addition thereto, and when directed by the Agency, the bidder, or a responsible officer, agent or employee of the bidder, must submit to an oral examination to be conducted by the Agency in relation to his proposed tentative plan and schedule of

operations, and such other matters as the Agency may deem necessary in order to determine the bidder's ability and responsibility to perform the work in accordance with the Contract. Each person so examined must sign and verify a stenographic transcript of such examination noting thereon such corrections as such person may desire to make.

(D) If the bidder fails or refuses to supply any of the documents or information set forth in paragraph (B) hereof or fails to comply with any of the requirements thereof, the Agency may reject the bid.

29. Employment Report

In accordance with Executive Order No. 50 (1980) as modified by Executive Order 108 (1986), the filing of a completed Employment Report (ER) is a requirement of doing business with the City of New York for construction contractors with contracts of $1,000,000 or more and subcontractors with construction subcontracts of $750,000 or more. The required forms and information are included in the Bid Booklet.

30. Labor Law Requirements

(A) General: The successful bidder will be required to comply strictly with all Federal, State and local labor laws and regulations.

(B) New York State Labor Law: This Contract is subject to New York State Labor Law Section 220, which requires that construction workers on the site be paid prevailing wages and supplements. The Contractor is reminded that all wage provisions of this Contract will be enforced strictly and failure to comply will be considered when evaluating performance. Noncompliance may result in the contractor being debarred by the City from future contracts. Complaints filed with the Comptroller may result in decisions which may debar a contractor from bidding contracts with any state governmental entity and other political subdivisions.

(C) Records: The Contractor is expected to submit accurate payroll reports and other required documents and verify attendance and job classifications being utilized in compliance with the law, Contract provisions and agency procedures.

31. Insurance

(A) Bidders are advised that the insurance requirements contained herein are regarded as material terms of the Contract. As required by Article 22 of the Contract, the contractor must effect and maintain with companies licensed and authorized to do business in the State of New York, the types of insurance set forth therein, when required by and in the amounts set forth in Schedule A of the General Conditions. Such required insurance must be provided from the date the contractor is ordered to commence work and up to the date of final acceptance of all required work.

(B) The contractor must, within ten days of receipt of the notice of award, submit the following insurance documentation: (a) original certificate of insurance for general liability in the amount required by Schedule A of the General Conditions, and (b) original certificates of insurance or other proof of coverage for workers' compensation and disability benefits, as required by Section 57 of the New York State Workers' Compensation Law and Section 220 of the Disability Benefits Law.

32. Lump Sum Contracts

(A) Comparison of Bids: Bids on Lump Sum Contracts will be compared on the basis of the lump sum price bid, adjusted for alternate prices bid, if any.

(B) Lump Sum Bids for "General Construction Work" which include excavation shall include all necessary excavation work defined in the Specifications as being included in the lump sum bid. The bidder shall also bid a unit price for the additional cost of excavating material which is defined in the Specifications as excavation for which additional payment will be made. The total estimated additional cost of removing such material will be taken as the quantity set forth in the Engineer's Estimate multiplied by the unit price bid. This total estimated cost of additional excavation shall be added to the lump sum bid for the General Construction Work for the purpose of comparing bids to determine the low bidder.

(C) Variations from Engineer's Estimate: The Engineer's Estimate of the quantity of excavation for which additional payment will be made is approximate only and is given solely to be used as a uniform basis for the comparison of bids and such estimate is not to be considered as part of this contract. The quantities actually required to complete the contract work may be more or less than the quantities in the Engineer's Estimate and, if so, no action for damages or for loss of profits shall accrue to the contractor by reason thereof.

33. Unit Price Contracts

(A) Comparison of Bids: Bids on Unit Price Contracts will be compared on the basis of a total estimated price, arrived at by taking the sum of the estimated quantities of such items, in accordance with the Engineer's Estimate of Quantities set forth in the Bid Schedule, multiplied by the corresponding unit prices, and including any lump sum bids on individual items.

(B) Variations from Engineer's Estimate: Bidders are warned that the Engineer's Estimate of Quantities on the various items of work and materials is approximate only, given solely to be used as a uniform basis for the comparison of bids, and is not be considered part of this contract. The quantities actually required to complete the contract work may be less or more than so estimated, and if so, no action for damages or for loss of profits shall accrue to the contractor by reason thereof.

(C) Overruns: The terms and conditions applicable to overruns of unit price items are set forth in Article 26 of the Contract.

34. Excise Tax

Bidders are referred to the Specifications for information on Federal Excise Tax exemptions.

35. Licenses and Permits

The successful bidder will be required to obtain all necessary licenses and permits necessary to perform the work.

36. Multiple Prime Contractors

If more than one prime contractor will be involved on this project, all contractors are required to examine the Invitation for Bid packages for all other parts of the project.

37. Locally Based Enterprise Requirements (LBE)

This Contract is subject to the requirements of Administrative Code, Section 6-108.1, and the regulations promulgated thereunder. No construction contract will be awarded unless and until these requirements have been complied with in their entirety. The bidder is advised of the provisions set forth below, as well as the provisions with respect to the Locally Based Enterprise Program contained in Article 67 of the Contract. The contractor is advised that:

(A) If any portion of the Contract is subcontracted, not less than ten percent of the total dollar amount of the contract shall be awarded to locally based enterprises ("LBEs"); except, where less than ten percent of the total dollar amount of the Contract is subcontracted, such lesser percentage shall be so awarded.

(B) No contractor shall require performance and payment bonds from LBE subcontractors.

(C) No Contract shall be awarded unless the contractor first identifies in its bid:

(1) the percentage, dollar amount and type of work to be subcontracted; and
(2) the percentage, dollar amount and type of work to be subcontracted to LBEs.

(D) Within ten calendar days after notification of low bid, the apparent low bidder shall submit an "LBE Participation Schedule" to the contracting agency. If such schedule does not identify sufficient LBE subcontractors to meet the requirements of Administrative Code Section 6-108.1, the apparent low bidder shall submit documentation of its good faith efforts to meet such requirements.

(1) The "LBE Participation Schedule" shall include:

(a) the name and address of each LBE that will be given a subcontract,
(b) the percentage, dollar amount and type of work to be subcontracted to the LBE, and
(c) the dates when the LBE subcontract work will commence and end.

(2) The following documents shall be attached to the "LBE Participation Schedule":

(a) verification letters from each subcontractor listed in the "LBE Participation Schedule" stating that the LBE will enter into a formal agreement for work,
(b) certification documents of any proposed LBE subcontractor which is not on the LBE certified list, and
(c) copies of the certification letter of any proposed subcontractor which is an LBE.

(3) Documentation of good faith efforts to achieve the required LBE percentage shall include as appropriate but not limited to the following:

(a) attendance at prebid meetings, when scheduled by the agency, to advise bidders of contract requirements;

(b) advertisement where appropriate in general circulation media, trade association publications and small business media of the specific subcontracts that would be at least equal to the percentage goal for LBE utilization specified by the contractor;

(c) written notification to association of small, minority and women contractors soliciting specific subcontractors;

(d) written notification by certified mail to LBE firms that their interest in the contract is solicited for specific work items and their estimated values;

(e) demonstration of efforts made to select portions of the work for performance by LBE firms in order to increase the likelihood of achieving the stated goal;

(f) documented efforts to negotiate with LBE firms for specific subcontracts, including at a minimum:
(i) The names, address and telephone numbers of LBE firms that are contacted;
(ii) A description of the information provided to LBE firms regarding the plans and specifications for portions of the work to be performed;
(iii) Documentation showing that no reasonable price can be obtained from LBE firms;
(iv) A statement of why agreements with LBE firms were not reached;

(g) a statement of the reason for rejecting any LBE firm which the contractor deemed to be unqualified; and

(h) documentation of efforts made to assist the LBE firms contacted that needed assistance in obtaining required insurance.

(E) Unless otherwise waived by the Commissioner with the approval of the Office of Economic and Financial Opportunity, failure of a proposed contractor to provide the information required by paragraphs (C) and (D) above may render the bid non-responsive and the Contract may not be awarded to the bidder. If the contractor states that it will subcontract a specific portion of the work, but can demonstrate despite good faith efforts it cannot achieve its required LBE percentage for subcontracted work until after award of Contract, the Contract may be awarded, subject to a letter of compliance from the contractor stating that it will comply with Administrative Code Section 6-108.1 and subject to approval by the Commissioner. If the contractor has not met its required LBE percentage prior to award, the contractor shall demonstrate that a good faith effort has been made subsequent to award to obtain LBEs on each subcontract until its meets the required percentage.

(F) When a bidder indicates prior to award that no work will be subcontracted, no work may be subcontracted without the prior written approval of the Commissioner, which shall be granted only if the contractor in good faith seeks LBE subcontractors at least six weeks prior to the start of work.

(G) The contractor may not substitute or change any LBE which was identified prior to award of the contract without the written permission of the Commissioner. The contractor shall make a written application to the Commissioner for permission to make such substitution or change, explaining why the contractor needs to change its LBE subcontractor and how the contractor will meet its LBE subcontracting requirement. Copies of such application must be served on the originally identified LBE by certified mail return receipt requested, as well as the proposed substitute LBE. The Commissioner shall determine whether or not to grant the contractor's request for substitution.

38. Bid Submission Requirements

The Bid Submission Requirements are set forth in the BID BOOKLET VOLUME 1 OF 3.

39. Comptroller's Certificate

This Contract shall not be binding or of any force unless it is registered by the Comptroller in accordance with Section 328 of the City Charter and the Procurement Policy Board Rules. This Contract shall continue in force only after annual appropriation of funds by the City of New York and certification as hereinabove set forth.

40. Procurement Policy Board Rules

This Invitation For Bids is subject to the Rules of the Procurement Policy Board of the City of New York. In the event of a conflict between said Rules and a provision of this Invitation For Bids, the Rules shall take precedence.

41. Viewing of Submitted Bid Documents

In accordance with Procurement Policy Board Rules of the City of New York, Section 3-02, the submitted bid documents will be available to view immediately after completion of the bid opening and by appointment for up to 72 hours after the bid opening.

42. DDC Safety Requirements

The DDC Safety Requirements apply to the work to be performed pursuant to the Contract. The DDC Safety Requirements are set forth on the following pages.

CITY OF NEW YORK
DEPARTMENT OF DESIGN AND CONSTRUCTION
SAFETY REQUIREMENTS FOR CONSTRUCTION CONTRACTS

January 2020

THE DDC SAFETY REQUIREMENTS FOR CONSTRUCTION CONTRACTS INCLUDE THE FOLLOWING SECTIONS:

I. POLICY ON SITE SAFETY 2

II. PURPOSE 2

III. DEFINITIONS 2

IV. RESPONSIBILITIES 4

V. SAFETY QUESTIONNAIRE 7

VI. SITE SAFETY PLAN 7

VII. KICK-OFF/PRE-CONSTRUCTION MEETINGS AND SAFETY REVIEW 9

VIII. EVALUATION DURING WORK IN PROGRESS 9

IX. SAFETY PERFORMANCE EVALUATION 10

I. POLICY ON SITE SAFETY

The City of New York Department of Design and Construction (DDC) is committed to a policy of injury and illness prevention and risk management for construction work that will ensure the safety and health of the workers engaged in the projects and the protection of the general public. Therefore, it is DDC's policy that work carried out by Contractors on DDC contracts must, at a minimum, comply with the most current versions of all applicable federal, state and city laws, rules, and regulations, including without limitation:

- Code of Federal Regulations, Title 29, Part 1926 (29 CFR 1926) and applicable Sub-parts of Part 1910 – U.S. Occupational Safety and Health Administration (OSHA);
- Federal Highway Administration – Manual on Uniform Traffic Control Devices (MUTCD);
- New York Codes, Rules and Regulations (NYCRR), Title 12, Part 23 – Protection in Construction, Demolition and Excavation Operations;
- New York Codes, Rules and Regulations (NYCRR), Title 16, Part 753 – Protection of Underground Facilities;
- New York City Administrative Code, Title 28 – New York City Construction Codes;
- Rules of the City of New York, Title 15, Chapter 13 – Rules Pertaining To the Prevention of the Emission of Dust from Construction Related Activities;
- Rules of the City of New York, Title 15, Chapter 28 – Citywide Construction Noise Mitigation;
- Rules of the City of New York, Title 34 Chapter 2 – NYCDOT Highway Rules.

The Contractor will be required to comply with all new and/or revised federal, state and city laws, rules, and regulations, issued during the course of the project, at the expense of the Contractor without any additional costs to the DDC.

II. PURPOSE

The purpose of this policy is to ensure that Contractors perform their work and supervise their employees in accordance with all applicable federal, state and city rules and regulations. Further, Contractors will be expected to minimize or eliminate jobsite and public hazards, through a planning, inspection, auditing and corrective action process. The goal is to control risks so that injuries, illnesses, and accidents to contractors' employees, DDC employees and the general public, as well as damage to city-owned and private property, are reduced to the lowest level feasible.

III. DEFINITIONS

Agency Chief Contracting Officer (ACCO): The ACCO will mean the person delegated authority by the Commissioner to organize and supervise the procurement activity of subordinate Agency staff in conjunction with the City Chief Procurement Officer (CCPO).

Competent Person: As defined by OSHA, an individual who is capable of identifying existing and predictable hazards in the surroundings or working conditions that are unsanitary, hazardous, or dangerous to employees or the general public, and who has authorization to take prompt corrective measures to eliminate them. This individual will have completed, at a minimum an authorized 30-hour OSHA Construction Safety Course. The Contractor may be required to provide more than one competent person due to construction operations and based on the number of active work sites.

Construction Safety Auditor: A representative of the Office of Construction Safety who provides inspection and assessment services to enhance health and safety on all DDC construction projects. The activities of the Construction Safety Auditor include performing site audits, reviewing safety plans, reviewing construction permits, drawings, verifying Contractor's compliance with applicable federal, state and city laws, rules, regulations, and DDC Contract Safety Requirements, etc. and rendering technical advice and assistance to DDC Resident Engineers and Project Managers.

Office of Construction Safety: A unit of DDC Safety and Site Support that assesses contractor's safety on DDC jobsites and advises responsible parties of needed corrective actions.

Registered Construction Superintendent: For certain projects, as defined in New York City Construction Codes – Title 28, the contractor will provide a Construction Superintendent registered with the NYC Department of Buildings and responsible for all duties as defined in Chapter 33 of Title 1 of the Rules of the City of New York.

Contractor: For purposes of these Safety Requirements, the term "Contractor" will mean any person or entity that enters into a contract for the performance of construction work on a DDC project. The term "Contractor" will include any person or entity which enters into any of the following types of contracts: (1) a prime construction contract for a specific project, (2) a prime construction contract using the Job Order Contracting System ("JOCS Contract"), and (3) a subcontract with a CM/Builder ("First Tier Subcontract").

Daily Safety Job Briefing: Daily jobsite safety briefings, given to all jobsite personnel at project site by the Contractor before work begins and/or if hazards or potential hazards are discovered while working, with the purpose of discussing the scheduled activities for the day, the hazards related to these activities, activity specific safety procedures, and Job Hazard Analysis associated with the scheduled construction work. Daily jobsite briefings will be documented, available at the jobsite, and will include at a minimum, topics, name and signature of the person conducting the briefing session, names and signatures of attendants, name of the designated competent person, contactor's name, DDC Project ID, date, time, and location.

Director – Office of Construction Safety: Responsible for the operations of the Office of Construction Safety and the DDC Site Safety management programs.

Job Hazard Analysis (JHA): A process of identifying the major job tasks and any potential site-specific hazards that may be present during construction and establishing the means and methods to eliminate or control those hazards. A JHA will be documented, available at the jobsite and will include at a minimum work tasks, being performed, identified hazards, control methods for the identified hazards, contractor's name, DDC Project ID, location, date, name and signature of certifying person. A JHA is a living document that will be re-evaluated and revised to address new hazards and tasks that may develop and will be present at the worksite and produced upon request.

Qualified Person: As defined by OSHA, an individual who, by possession of a recognized degree, certificate, license, or professional standing, or who by extensive knowledge, training, and experience, has successfully demonstrated his or her ability to solve problems relating to the subject matter, the work, or the project. Qualified Persons are required under regulation to address issues pertaining, but without limit, to fall protection, scaffold design, maintenance and protection of traffic, and excavation protective system, among others.

Project Site: Those areas indicated in the Contract Documents where the Work is to be performed.

Project Safety Representative: The designated Project Safety Representative will have at a minimum an OSHA 30-hour Construction Safety Course and other safety training applicable to Contractor's/subcontractor's project work. This individual will be responsible to oversee safety performance of the required construction work, conduct documented daily safety inspections, and implement corrective actions to maintain a safe work site. The Project Safety Representative must have sufficient experience and skills necessary to thoroughly understand the health and safety hazards and controls and must have authority to undertake corrective actions. A dedicated full-time Project Safety Representative may be required on large projects and projects deemed by DDC to be particularly high risk. DDC reserves the right to request a dedicated full-time Project Safety Representative for any reason at any time during the course of the project at the expense of the Contractor without any additional costs to the DDC. The full-time Project Safety Representative will be present at the site during all work activities.

Resident Engineer ("RE"): Representative of the Commissioner duly designated by the Commissioner to be his/her representative at the site of the work. The RE may be a consultant retained by DDC, including a Construction Management (CM) or Resident Engineer Inspection (REI) firm. If DDC has retained a CM, REI or other consultant firm to perform management and oversite for the Project (e.g., CM-Builder, CM-Design-Builder, Project Manager, Program Manager), that CM, REI or other consultant is the Resident Engineer for purposes of these Safety Requirements.

Safety Questionnaire: Used by DDC to evaluate Contractor's current and past safety performance. It is required to be completed by all Contractors initially when submitting bids for Construction work, or when being pre-qualified and updated annually or as requested by the DDC.

Site Safety Manager: For certain projects, as defined in New York City Construction Codes – Title 28, the Contractor will provide a Site Safety Manager with a Site Safety Manager License issued by the New York City Department of Building.

Site Safety Plan: A site-specific safety plan developed by the Contractor for a DDC project. The Site Safety Plan will identify the project work scope, identify hazards associated with the project work and include project specific safety procedures and training appropriate and necessary to complete the work. The Site Safety Plan will be submitted within 30 days from the Award Date or as otherwise directed and is subject to review and acceptance by the Office of Construction Safety prior to the commencement of work at the site.

Unsafe or Unhealthy Condition: A condition that could be potentially hazardous to the health and safety of personnel or the public, and/or damaging to equipment, machinery, property, or the environment.

Weekly Safety Meetings: Weekly jobsite safety meetings, given to all jobsite personnel by Contractor, with the purpose of discussing general safety topics and job specific requirements encountered at the DDC work site. Weekly safety meetings will be documented and will include at a minimum, topics, name and signature of the person conducting the meeting, names and signatures of attendees, contractor's name, DDC Project ID, date, and location.
Work: The construction required by the Contractor's Contract Documents whether completed or partially completed, performed by the Contractor/ subcontractors. Work refers to the furnishing of labor, furnishing and incorporating materials and equipment into the construction and providing any service required by the Contract Documents to fulfill the Contractor's obligation to complete the Project. For the purposes of these Safety Requirements, the term "Work" includes all Utility Interference work (commonly referred to as "Section U", "EP-7", and "Joint Bid" work) performed in association with this Contract.

IV. RESPONSIBILITIES

All persons who manage, perform, and provide support for construction projects will conduct operations in compliance with the requirements identified in this Policy and all applicable governing regulatory agency requirements and guidelines pertaining to safety in construction.

A. Resident Engineer

1. Review and facilitate Contractor(s) Site Safety Plan submittals to DDC for acceptability.
2. Notify the Office of Construction Safety of the commencement of construction work.
3. Develop and implement a training verification process to ensure that all CM/REI, consultant, Contractor, and subcontractor employees are properly trained. Maintain all applicable initial and refresher training records and assures documentation availability on site.
4. Maintain documentation of and attend weekly safety meetings and daily safety job briefings.
5. Assure that Contractor(s) JHA's are current to reflect the work tasks being performed, hazards, and control methods to mitigate the identified hazards. Verify that all employees at the job site are trained on the JHAs and maintain supporting documentation on site.
6. Assure adequate planning for all critical construction activities (crane operation, excavation, confined space entry, etc.) including coordination between Contractor(s) /DDC/ other Agencies as required.
7. Maintain custody of all construction related permits, plans, approvals, drawings, etc., related to the project and assure their availability on site.
8. Recognize, minimize, or eliminate jobsite and public hazards, through required planning, inspection, verification, and corrective action process.
9. Monitor the conditions at the site for conformance with the Contractor's Site Safety Plan, DDC policies, permits, and all applicable regulations and documentation that pertain to construction safety.
10. Notify the Contractor and DDC immediately upon determination of any condition or activity existing which is not in compliance with the Contractor's Site Safety Plan, applicable federal, state or local codes or any condition that presents a potential risk of injury to the public or workers or possible damage to property. Direct the Contractor to provide such labor, materials, equipment, and supervision to remedy such conditions.
11. Notify the Office of Construction Safety and the ACCO's Insurance and Risk Management Unit of project-related accidents, incidents, and near misses as per DDC's Construction Safety Emergency and Accident Notification and Response Procedure within two (2) hours.
12. In case of an accident, incident, or near miss, RE is responsible to protect the integrity of the accident site including but not limited to: the safeguarding of all evidence, documentation of all personnel on site at the time of the accident, gather facts related to all accidents, incidents, or near miss, and prepare required DDC Construction Accident Report as per DDC's Construction Safety Emergency and Accident Notification and Response Procedure. Maintain all records pertaining to accidents, incidents, and near miss and have them available upon request.
13. Notify the Office of Construction Safety within two (2) hours of the start of an inspection by any outside/ regulatory agency personnel, including NYS, OSHA, NYC DOB or any other City/State/Federal oversight entity and forward a copy of the inspection report within one business day of its receipt.
14. Escort and assist Construction Safety Auditors during all field and record audits.
15. Report any emergency conditions to the Office of Construction Safety immediately.

Note: In addition to the responsibilities listed above, if the Resident Engineer is a CM/REI or other non-City party hired by the City to manage the Project, the Resident Engineer is also required to do the following:

16. Provide personnel who are certified and or trained appropriately for the requirements of the project.

17. Perform an investigation for any project-related accidents, incidents, and near misses. Within 24-hours of the time of the accident, incident, or near miss, the CM/REI will submit an investigation report to the Office of Construction Safety. Such report will include proposed remedial measures and implementation of corrective actions to prevent recurrence.

DDC reserves the right to request that the CM/REI replace any CM/REI personnel for any reason at any time during the project.

B. Construction Contractors

Note: For CM-Build and CM-Design-Build Projects, the CM will meet all requirements listed in this section, as well as the Resident Engineer section above.

1. Submit a completed Safety Questionnaire and other safety performance related documentation with its bid or as part of a pre-qualification package.
2. Submit a Site Safety Plan within 30 days from the Award Date or as otherwise directed. The Site Safety Plan is subject to review and acceptance by the Office of Construction Safety prior to the commencement of work at the site. The Site Safety Plan will be revised and updated as necessary during the course of the project. If requested by the Office of Construction Safety, the Site Safety Plan must be developed and submitted for approval using a web-based system, the Site Safety Plan Application (SSP App).
3. Designate and identify a Project Safety Representative in the Site Safety Plan. The Contractor will immediately notify the Office of Construction Safety, in a form and manner acceptable to the Office of Construction Safety, of any permanent change to the designated Project Safety Representative. In the event the primary designated Project Safety Representative is temporary unable to perform his or her duties, an alternate Project Safety Representative will be provided. Resumes, outlining the qualification and experience for the Project Safety Representative (s) will be included in the Site Safety Plan and available upon request. DDC reserves the right to request the Contractor to replace a Project Safety Representative for any reason at any time during the course of the project.
4. Designate and identify a Competent Person(s) in the Site Safety Plan. Contractor/subcontractor may be required to provide more than one competent person due to construction operations and based on a number of work tasks/areas. DDC reserves the right to request the Contractor to replace a Competent Person or provide additional Competent Person(s) for any reason at any time during the course of the project. The Competent Person will be present at the site during all work activities.
5. For certain projects, as defined in New York City Construction Codes – Title 28, designate and identify the Licensed Site Safety Manager or Registered Construction Superintendent. Resumes, outlining the qualification and experience for the Licensed Site Safety Manager or Registered Construction Superintendent will be included in the Site Safety Plan and available upon request. The Contractor will immediately notify the Office of Construction Safety, in a form and manner acceptable to the Office of Construction Safety, of any permanent change to the designated Site Safety Manager and/or Construction Superintendent. In the event the primary designated Site Safety Manager or Construction Superintendent is temporarily unable to perform his
or her duties, an alternate Licensed Site Safety Manager and/or Registered Construction Superintendent will be provided. The Office of Construction Safety must be informed of such change. DDC reserves the right to request the Contractor to replace Site Safety Manager or Construction Superintendent for any reason at any time during the course of the project.
6. Develop a written Job Hazard Analysis (JHA) that identifies safety hazards and control methods for project specific work tasks. A preliminary JHA will be included in the Site Safety Plan submitted by the Contractor. A JHA is a living document that will be re-evaluated and revised to address new hazards and tasks that may develop during the course of the project and will be present at the worksite and produced upon request.
7. Develop project specific safety procedures to protect employees, general public, and property during all construction activities for the duration of the project.
8. Ensure that all employees are aware of the hazards associated with the project through documented formal and informal training and/or other communications. Conduct and document new employee and site-specific safety orientation for all Contractor and subcontractor personnel to review the hazards associated with the project as identified in the Site Safety Plan and the specific safety procedures and controls that will be used to protect workers, the general public and property. The Project Safety Representative will conduct this training prior to mobilization and if necessary during the course of the project. Documentation will be provided to the RE.

9. Prior to performing any work on DDC projects all Contractor's and subcontractor's employees will, at a minimum, have successfully completed, within the previous five calendar years, an OSHA 10-hour construction safety course.

   All training records (OSHA 10-hour, flagger, scaffold, fall protection, confined space, etc.) will be provided to the RE prior to mobilization, included in the Site Safety Plan, kept current during the course of the project, and available for review.
10. Conduct and document weekly safety meetings and daily job briefing sessions for the duration of the project. Attendance at weekly safety meetings and daily job briefing sessions is mandatory. A written record of weekly safety meetings will be available upon request and job briefing sessions will be available at the worksite.
11. As part of the Site Safety Plan, prepare site specific procedures, such as maintenance and protection of traffic plan, steel erection plan, confined space program, fall protection plan, demolition plan, site specific emergency evacuation plan, etc. (if not otherwise provided in the contract documents) and comply with all of its provisions.
12. Have immediately available for review at the project site where actual construction activities are being performed all applicable documentation, including but not limited to: JHAs for work tasks being performed, all required training records, MPT plan (where applicable), Noise and Dust Mitigation Plans, excavation protective system drawings (where applicable), Emergency Evacuation plan, fall protection program (where applicable), confined space program (where applicable), all required permits, daily job briefing records, all required documentation for crane operation (where applicable), daily inspection checklist, scaffold and sidewalk drawings (when applicable), safety data sheets for chemicals in use.
13. Comply with all federal, state and local safety and health rules, laws, and regulations.
14. Comply with all provisions of the Site Safety Plan.
15. Provide, replace, and adequately maintain at or around the project site, suitable and sufficient signage, lights, barricades and enclosures (fences, sidewalk sheds, netting, bracing, etc.). The project specific MPT plan will be developed, implemented, and reviewed during the course of the project.
16. The Project Safety Representative will conduct daily safety inspections, document the inspection results, implement corrective actions for the identified hazards. Maintain the inspection records and have them available upon request.
17. **Report unsafe or unhealthy conditions to the RE as soon as practical, but no more than 24 hours after discovery, and take prompt actions to remove or abate such conditions. Should an imminent dangerous condition be discovered, Contractor will stop all work in the area of danger until corrections are made.**
18. Report all accidents, incidents and near misses involving injuries to workers or the general public, as well as property damage, to the RE within one (1) hour.
19. Following an accident or incident, unless otherwise directed, the Contractor will not remove or alter any equipment, structure, material, or evidence related to the accident or incident. Exception: Immediate emergency procedures taken to secure structures, temporary construction, operations, or equipment that pose a continued imminent danger or facilitate assistance for persons who are trapped or who have sustained bodily injury. Take additional measures as necessary to secure the accident or incident site and to protect against any further injury or property damage.
20. The Contractor will perform an investigation into the root cause of the accident, incident, or near miss. Within 24 hours of an accident, incident, or near miss, the Contractor will prepare and submit to the RE a written investigation report detailing findings, corrective actions, and hazard mitigation implementation to prevent recurrence.
21. Notify the RE within two (2) hours of the start of an inspection by any outside regulatory agency personnel, including OSHA, NYC DOB, or others.
22. Maintain all records pertaining to all required safety compliance documents, accidents and incidents reports. DDC reserves the right to request copy of any records pertaining to the safety of the project and required by DDC and other federal, state, and city agencies, including but not limited to permits, training records, safety inspection records, drawings, equipment records, etc.
23. Cooperate with DDC Office of Construction Safety/ RE and address DDC recommendations on safety, which will in no way relieve the Contractor of its responsibilities for safety on the project. The Contractor has sole responsibility for safety.

V. SAFETY QUESTIONNAIRE

DDC requires that all Contractors provide information regarding their current and past safety performance and programs. This will be accomplished by the use of the DDC Safety Questionnaire. As a part of the bid submittal package, the contractor will submit a completed DDC Safety Questionnaire listing company workers' compensation experience modification rating and OSHA Incident Rates for the three (3) years prior to the date of the bid opening. DDC may request a Contractor to update its Questionnaire at any time or to provide more detailed information. The Contractor will provide the requested information within 15 days.

The following criteria will be used by DDC in reviewing the Contractor's responsibility, which will be based on the information provided on the questionnaire:

Criteria 1: OSHA Injury and Illness Rates (I&IR) are no greater than the average for the industry (based on the most current Bureau of Labor Statistics data for the Contractors SIC code); and

Criteria 2: Insurance workers compensation Experience Modification Rate (EMR) equal to or less than 1.0; and

Criteria 3: Any willful violations issued by OSHA or NYC DOB within the last three (3) years; and

Criteria 4: A fatality (worker or member of public) and injuries, requiring OSHA notification, experienced on or near Contractor's worksite within the last three (3) years; and

Criteria 5: Past safety performance on DDC projects (accidents; status of site safety plan submittals; etc.)

Criteria 6: OSHA violation history for the last three (3) years;

Criteria 7: Contractor will provide OSHA Injury and Illness Records (currently OSHA 300 and 300A Logs) for the last three (3) years.

If the Contractor fails to meet the basic criteria listed above, the Office of Construction Safety may request, through the ACCO, more details concerning the Contractor's safety experience. DDC may request the Contractor to provide copies of, among other things, accident investigation reports, OSHA records, OSHA and NYC DOB citations, EPA citations and written corrective action plan.

VI. SITE SAFETY PLAN

Within thirty (30) days from the Award Date or as otherwise directed, the Contractor will submit the Site Safety Plan. The Site Safety Plan will identify project work scope, safety hazards associated with the project tasks, and include specific safety procedures and training appropriate and necessary to complete the work. The Site Safety Plan is subject to review and acceptance by the Office of Construction Safety prior to the commencement of work at the site. Due to the project work scope and project duration, the Office of Construction Safety may grant a conditional acceptance for a Site Safety Plan without all sections being complete. In a case of a "Conditional Acceptance" of a Site Safety Plan, the Contractor will provide the remaining sections previously incomplete and/or not submitted for review and acceptance by the Office of Construction Safety prior to the commencement of the construction activities. The Office of Construction Safety reserves the right to withdraw the initial "Conditional Acceptance" if the Contractor fails to provide the remaining sections of a Site Safety Plan. Failure by the Contractor to submit an acceptable Site Safety Plan will be grounds for default.

Site Safety Plan requirements: The Site Safety Plan will be a written document and will apply to all project specific Contractor and subcontractor operations, and will have at a minimum, the following elements with each described in a separate section (It may be necessary to modify the basic format for certain unique or high-risk projects, such as tunnels or high-rise construction). All Site Safety Plan sections will be numbered in the order listed below. For sections, which are not applicable for the type of the work being performed by the Contractor on DDC project, the Contractor will in writing indicate "Not applicable based on the project work scope." The Site Safety Plan will include Contractor's name, DDC project ID, project location (s), and development and revision dates. The Site Safety Plan will include the sections, attachments, and appendixes provided in the Site Safety Plan. All pages of the Site Safety Plan will be numbered. If requested by the Office of Construction Safety, the Site Safety Plan must be developed and submitted for approval using a web-based system, the Site Safety Plan Application (SSP App).

1. Project Work Scope – Detailed information regarding work tasks that will be performed by Contractor and subcontractors under the project.
2. Responsibility and Organization – Contractor's organization chart with responsible personnel for the project, including titles, names, contact information, roles, and responsibilities. All Contractor's personnel required by the DDC Safety Requirements will be identified.
3. Safety Training and Education – OSHA 10 Hours training, requirements for daily safety briefings and weekly safety meetings, any work task specific training, responsible staff for implementation of training program for the project.
4. Job Hazard Analysis (JHA) – Project specific Job Hazard Analysis including work tasks, identified hazards, hazard control methods (administrative, engineering, PPE) to protect workers, property and general public, Contractor's name, project id, location, name and signature of a certifying person, hazard assessment date.
5. Protection of Public – Project specific procedures covering safety of the general public during all project construction activities.
6. Hazard Corrective Actions - Procedures for hazard identification, including responsible person(s), frequency of safety inspections, implementation of corrective actions, safety inspection checklist.
7. Accident/Exposure Investigation – Project specific procedures for accident/incident/near miss investigation and implementation of corrective actions. Accident/incident/near miss notification procedure of DDC project staff (timer frame and responsible personnel).
8. Recording and Reporting Injuries – Procedures to meet 29 CFR 1904 requirements.
9. First Aid and Medical Attention – Responsible staff, location and inspection of First Aid kit, directions to local hospitals; emergency telephone numbers.
10. Project Specific Fire Protection and Prevention Program – Project specific procedures, including responsible staff, fire alarm system/methods, hot work procedures, etc.
11. Housekeeping Procedure.
12. Project Specific Illumination Procedure.
13. Project Specific Sanitation Procedure.
14. Personal Protective Equipment (PPE), including Respiratory Protection Program and Hearing Conservation Program, if required.
15. Hazard Communication Program – Contractor's Hazard Communication Program, responsible staff; training; SDS records, project specific list of chemicals; location of the program and SDS records.
16. Means of Egress – Information regarding free and unobstructed egress from all parts of the building or structure; exit marking; maintenance of means of egress, etc.
17. Employee Emergency Action Plan – Project specific: responsible staff, emergency alarm system/devices, evacuation procedure, procedure to account for employees after evacuation, etc.
18. Evacuation Plan – Project specific evacuation plan (drawing/scheme) with exists and evacuation routes.
19. Ionizing/Nonionizing Radiation – Competent person, license and qualification requirements, type of radiation, employee's exposure and protection, safety procedures, etc.
20. Material Handling, Storage, Use and Disposal – Project specific information regarding material storage, disposal, and handling: procedures, plan/drawings, etc.
21. Signs, Signals, and Barricades – Use of danger/warning signs, safety instruction signs, sidewalk closure and pedestrian fencing and barricades (if not included in the MPT plan), etc.
22. Tools – Hand and Power – Safety procedures for the type of tools to be used.
23. Scaffold – Project specific scaffold types, procedures, training requirements, scaffold drawings, designed, sealed, and signed by NYS Licensed Professional Engineer, or as otherwise directed; competent person, criteria for project specific scaffold, falling object protection, procedures for aerial lifts/scissor lifts.
24. Welding and Cutting – Project specific procedure for welding and cutting, including all necessary safety requirements such as fire prevention, personal protective equipment, hot work permits (if not covered by Contractor's Fire Prevention and Protection program, FDNY certificate requirements).
25. Electrical Safety – Project specific procedures, including lock out-tag out.
26. Fall Protection – Project specific information regarding selected fall protection systems, fall protection plan, responsible staff.
27. Cranes, Derrick, Hoists, Elevators, Conveyors – project specific equipment information including type, rated load capacity, manufacture specification requirements, competent person, exposure to falling load, inspection, recordkeeping, clearance requirements, communication procedure, ground lines, permits.

28. Excavation Safety – Competent person; excavation procedures; project specific protective system, including drawings, designed, sealed, and signed by NYS Licensed Professional Engineer, or as otherwise directed.
29. Protection of Underground Facilities and Utilities Procedure, including responsible staff and responsibilities.
30. Concrete and Masonry Construction Procedures
31. Maintenance and Protection of Traffic Plan – Project specific MPT plan, designed, sealed, and signed by NYS Licensed Professional Engineer, or as otherwise directed; flagmen training, public safety, etc.
32. Steel Erection – Site specific erection plan, requirements for applicable written notifications, competent person, fall protection plan, training requirements, etc.
33. Demolition – Engineering survey, including written evidence, disconnection of all effected utilities, identification of all hazardous chemicals, materials, gases, etc., floor openings, chutes, inspection and maintenance of all stairs/passageways, removal of materials/debris/structural elements, lock out/tag out, competent person.
34. Blasting and the Use of Explosives – Project specific safety procedures, warning signs, training/qualification, transportation, storage and use of explosives, inspection.
35. Stairways and Ladders – Types of stairs and ladders, safety procedures, training requirements.
36. Alcohol and Drug Abuse Policy
37. Rodents and Vermin Controls
38. Toxic and Hazardous Substances – Safety procedures for substances that Contractor's and subcontractor's employees can be exposed on project.
39. Noise Mitigation Plan – Completed project specific Noise Mitigation Plan, and noise mitigation procedures.
40. Confined Space Program – Project specific Confined Space Program, responsible staff, training records, equipment information, rescue procedure, list of project specific confined spaces, forms.
41. Construction Vehicles/Heavy Equipment – Type of construction vehicles/heavy equipment to be used on site, procedures
42. Dust Mitigation Plan – Completed project specific Dust Mitigation Plan, and dust mitigation procedures.
43. Working Over and Near Water. Diving Operations – safety procedures including personal protective equipment, fall protection, rescue services, etc.

The most critical component of the Site Safety Plan is the Job Hazard Analysis (JHA) section. The JHA form is a written document prepared by the Contractor. The Contractor will conduct a site and task assessment to identify the tasks and any potential safety or environmental hazards related to performance of the work, eliminate or implement controls for the potential hazards, and identify proper personal protective equipment for the task. The JHA will be communicated to all Contractor/subcontractor personnel on site. The JHA will include safety hazard identification and controls to protect employees, general public, and property.
The initial JHA will be included in the Contractor's Site Safety Plan and the current JHA form will be available at the construction site for reference. A JHA is a living document that will be re-evaluated and revised to address new hazards and tasks that may develop and will be present at the worksite and produced upon request.

VII. KICK-OFF MEETINGS/PRE-CONSTRUCTION AND SAFETY REVIEW

Prior to the start of construction activities on all DDC projects, RE will invite the Office of Construction Safety to the construction kick-off meeting. The Office of Construction Safety representative(s) will participate in this meeting with the Contractor and RE for the purpose of:

A. Reviewing DDC Contract Safety Requirements
B. Reviewing site-specific safety issues based on a project work scope, location, and any other factors which may impact safety of workers and general public.
C. Reviewing the Site Safety Plan and JHA requirements.
D. Reviewing Accident/Incident reporting and investigation procedures.
E. Reviewing designated safety contacts, roles, and responsibilities.
F. Discussing planned inspections and audits of the site by the Office of Construction Safety personnel.

VIII. EVALUATION DURING WORK IN PROGRESS

The Contractor's adherence to these Safety Requirements will be monitored throughout the project. This will be accomplished by the following:

A. Use of a safety checklist by a representative of the Office of Construction Safety (or other designated DDC representative) and the RE during regular inspections and comprehensive audits of the job site. Field Exit Conferences will be held with the RE and Contractor Project Safety Representatives.

B. The RE will continually monitor the safety and environmental performance of the Contractor's employees and work methods. Deficiencies will be brought to the attention of the Contractor's Project Safety Representative on site for immediate correction. The RE will maintain a written record of these deficiencies and have these records available upon request. Any critical deficiencies will be immediately reported to the Office of Construction Safety via telephone (718)391-1911.

C. If the Contractor's safety performance during the project is not up to DDC standards (safety performance measure, accident/incident rate, etc.) the Director – Office of Construction Safety, or his/her designee will meet with the Contractor's Project Safety Representative and other representatives, the RE, and the DDC Environmental Specialist (if environmental issues are involved). The purpose of this meeting is to 1) determine the level of non-compliance; 2) explain and clarify the safety/environmental provisions; 3) agree on a future course of action to correct the deficiencies.

D. If the deficiencies continue, the Commissioner may, without limitation, declare the Contractor in default.

E. The Contractor will within 1 hour inform the RE of all accidents/incidents/near misses including all fatalities, any injuries to employees or members of the general public, and property damage (e.g., structural damage, equipment rollovers, utility damage, loads dropped from crane). The RE will notify the Office of Construction Safety as per DDC's Construction Safety Emergency and Accident Notification and Response Procedure and will maintain a record of all Contractor accidents/incidents for the project.

F. The Contractor and the RE will notify the Office of Construction Safety within two (2) hours of the start of any NYS-DOL/ NYC-COSH/ OSHA/ EPA inspections.

IX. SAFETY PERFORMANCE EVALUATION

The Contractor's safety record, including accident/incident history and DDC safety inspection results, will be considered as part of the Contractor's performance evaluation at the conclusion of the project. Poor safety performance during the course of the project will be a reason to rate a Contractor unsatisfactory which may be reflected in the City's PASSPort system and will be considered for future procurement actions as set forth in the City's Procurement Policy Board Rules.

NOTICE TO BIDDERS

Please be advised that a Rider to the March 2017 New York City Standard Construction Contract regarding Non-Compensable Delays and Grounds for Extension has been attached and incorporated in this Invitation for Bid. Other than provisions specifically delineated in the Rider, all other terms of the March 2017 New York City Standard Construction Contract continue to apply in full force and effect.

RIDER TO NEW YORK CITY STANDARD CONSTRUCTION CONTRACT (MARCH 2017) REGARDING NON-COMPENSABLE DELAYS AND GROUNDS FOR EXTENSION

[Instructions to Agencies: Please attach this Rider to the March 2017 version of the New York City Standard Construction Contract]

The following provisions supersede the corresponding provisions in the March 2017 version of the New York City Standard Construction Contract:

1. Section **11.5.1** provides as follows:

   11.5.1 The acts or omissions of public or government bodies (other than **City** agencies) or of any third parties who are disclosed in the **Contract Documents,** or those third parties who are ordinarily encountered or who are generally recognized as related to the **Work**, including but not limited to, **Other Contractors**, utilities or private enterprises;

2. Section **11.5.6** provides as follows:

   11.5.6 Climatic conditions, storms, floods, droughts, tidal waves, fires, hurricanes, earthquakes, landslides or other catastrophes or acts of God; acts of war or of the public enemy or terrorist acts; disruption, outage or power failure caused by a utility's inability or failure to provide service, pandemics, epidemics, outbreaks of infectious disease or any other public health emergency; other states of emergency declared by the City, State or Federal government , quarantine restrictions, and freight embargoes; including the **City's** reasonable responses to any of the above; and

3. Section **13.3** provides as follows:

   13.3 Grounds for Extension: If such application is made, the **Contractor** shall be entitled to an extension of time for delay in completion of the **Work** caused solely:

   13.3.1 By any of the acts or omissions of the **City**, its officials, agents or employees set forth in Articles **11.4.1.1** through **11.4.1.9**; or

   13.3.2 By or attributable to any of the items set forth in Articles **11.5.1** through **11.5.7**.

   13.3.3 The **Contractor** shall, however, be entitled to an extension of time for such causes only for the number of **Days** of delay which the **ACCO** or the Board may determine to be due solely to such causes, and then only if the **Contractor** shall have strictly complied with all of the requirements of Articles 9 and 10

CITY OF NEW YORK

STANDARD CONSTRUCTION CONTRACT

March 2017

(NO TEXT ON THIS PAGE)

CITY OF NEW YORK
STANDARD CONSTRUCTION CONTRACT

TABLE OF CONTENTS

CHAPTER I: THE CONTRACT AND DEFINITIONS 1
ARTICLE 1. THE CONTRACT 1
ARTICLE 2. DEFINITIONS 1
CHAPTER II: THE WORK AND ITS PERFORMANCE 4
ARTICLE 3. CHARACTER OF THE WORK 4
ARTICLE 4. MEANS AND METHODS OF CONSTRUCTION 4
ARTICLE 5. COMPLIANCE WITH LAWS 5
ARTICLE 6. INSPECTION 10
ARTICLE 7. PROTECTION OF WORK AND OF PERSONS AND PROPERTY; NOTICES AND INDEMNIFICATION 11
CHAPTER III: TIME PROVISIONS 12
ARTICLE 8. COMMENCEMENT AND PROSECUTION OF THE WORK 12
ARTICLE 9. PROGRESS SCHEDULES 13
ARTICLE 10. REQUESTS FOR INFORMATION OR APPROVAL 13
ARTICLE 11. NOTICE OF CONDITIONS CAUSING DELAY AND DOCUMENTATION OF DAMAGES CAUSED BY DELAY 14
ARTICLE 12. COORDINATION WITH OTHER CONTRACTORS 18
ARTICLE 13. EXTENSION OF TIME FOR PERFORMANCE 19
ARTICLE 14. COMPLETION AND FINAL ACCEPTANCE OF THE WORK 21
ARTICLE 15. LIQUIDATED DAMAGES 23
ARTICLE 16. OCCUPATION OR USE PRIOR TO COMPLETION 23
CHAPTER IV: SUBCONTRACTS AND ASSIGNMENTS 24
ARTICLE 17. SUBCONTRACTS 24
ARTICLE 18. ASSIGNMENTS 26
CHAPTER V: CONTRACTOR'S SECURITY AND GUARANTEE 26
ARTICLE 19. SECURITY DEPOSIT 26
ARTICLE 20. PAYMENT GUARANTEE 27
ARTICLE 21. RETAINED PERCENTAGE 29
ARTICLE 22. INSURANCE 30
ARTICLE 23. MONEY RETAINED AGAINST CLAIMS 36
ARTICLE 24. MAINTENANCE AND GUARANTY 37
CHAPTER VI: CHANGES, EXTRA WORK, AND DOCUMENTATION OF CLAIM 38
ARTICLE 25. CHANGES 38
ARTICLE 26. METHODS OF PAYMENT FOR OVERRUNS AND EXTRA WORK 38
ARTICLE 27. RESOLUTION OF DISPUTES 41
ARTICLE 28. RECORD KEEPING FOR EXTRA OR DISPUTED WORK OR WORK ON A TIME & MATERIALS BASIS 45
ARTICLE 29. OMITTED WORK 46
ARTICLE 30. NOTICE AND DOCUMENTATION OF COSTS AND DAMAGES; PRODUCTION OF FINANCIAL RECORDS 46
CHAPTER VII: POWERS OF THE RESIDENT ENGINEER,THE ENGINEER OR ARCHITECT AND THE COMMISSIONER 48
ARTICLE 31. THE RESIDENT ENGINEER 48
ARTICLE 32. THE ENGINEER OR ARCHITECT OR PROJECT MANAGER 48
ARTICLE 33. THE COMMISSIONER 48
ARTICLE 34. NO ESTOPPEL 49
CHAPTER VIII: LABOR PROVISIONS 49
ARTICLE 35. EMPLOYEES 49
ARTICLE 36. NO DISCRIMINATION 57
ARTICLE 37. LABOR LAW REQUIREMENTS 59

ARTICLE 38. PAYROLL REPORTS **64**
ARTICLE 39. DUST HAZARDS **64**
CHAPTER IX: PARTIAL AND FINAL PAYMENTS 65
ARTICLE 40. CONTRACT PRICE **65**
ARTICLE 41. BID BREAKDOWN ON LUMP SUM **65**
ARTICLE 42. PARTIAL PAYMENTS **65**
ARTICLE 43. PROMPT PAYMENT **66**
ARTICLE 44. SUBSTANTIAL COMPLETION PAYMENT **66**
ARTICLE 45. FINAL PAYMENT **67**
ARTICLE 46. ACCEPTANCE OF FINAL PAYMENT **68**
ARTICLE 47. APPROVAL BY PUBLIC DESIGN COMMISSION **69**
CHAPTER X: CONTRACTOR'S DEFAULT 69
ARTICLE 48. COMMISSIONER'S RIGHT TO DECLARE CONTRACTOR IN DEFAULT **69**
ARTICLE 49. EXERCISE OF THE RIGHT TO DECLARE DEFAULT **71**
ARTICLE 50. QUITTING THE SITE **71**
ARTICLE 51. COMPLETION OF THE WORK **71**
ARTICLE 52. PARTIAL DEFAULT **71**
ARTICLE 53. PERFORMANCE OF UNCOMPLETED WORK **72**
ARTICLE 54. OTHER REMEDIES **72**
CHAPTER XI: MISCELLANEOUS PROVISIONS 72
ARTICLE 55. CONTRACTOR'S WARRANTIES **72**
ARTICLE 56. CLAIMS AND ACTIONS THEREON **73**
ARTICLE 57. INFRINGEMENT **73**
ARTICLE 58. NO CLAIM AGAINST OFFICIALS, AGENTS OR EMPLOYEES **74**
ARTICLE 59. SERVICE OF NOTICES **74**
ARTICLE 60. UNLAWFUL PROVISIONS DEEMED STRICKEN FROM CONTRACT **74**
ARTICLE 61. ALL LEGAL PROVISIONS DEEMED INCLUDED **74**
ARTICLE 62. TAX EXEMPTION **74**
ARTICLE 63. INVESTIGATION(S) CLAUSE **76**
ARTICLE 64. TERMINATION BY THE CITY **78**
ARTICLE 65. CHOICE OF LAW, CONSENT TO JURISDICTION AND VENUE **80**
ARTICLE 66. PARTICIPATION IN AN INTERNATIONAL BOYCOTT **81**
ARTICLE 67. LOCALLY BASED ENTERPRISE PROGRAM **82**
ARTICLE 68. ANTITRUST **82**
ARTICLE 69. MACBRIDE PRINCIPLES PROVISIONS **83**
ARTICLE 70. ELECTRONIC FILING/NYC DEVELOPMENT HUB **85**
ARTICLE 71. PROHIBITION OF TROPICAL HARDWOODS **85**
ARTICLE 72. CONFLICTS OF INTEREST **85**
ARTICLE 73. MERGER CLAUSE **85**
ARTICLE 74. STATEMENT OF WORK **85**
ARTICLE 75. COMPENSATION TO BE PAID TO CONTRACTOR **85**
ARTICLE 76. ELECTRONIC FUNDS TRANSFER **85**
ARTICLE 77. RECORDS RETENTION **86**
ARTICLE 78. EXAMINATION AND VIEWING OF SITE, CONSIDERATION OF OTHER SOURCES OF INFORMATION AND CHANGED SITE CONDITIONS **86**

ARTICLE 79: PARTICIPATION BY MINORITY-OWNED AND WOMEN-OWNED BUSINESS ENTERPRISES IN CITY PROCUREMENT ……87

SIGNATURES ……95

ACKNOWLEDGMENT BY CORPORATION ……96
ACKNOWLEDGMENT BY PARTNERSHIP……96
ACKNOWLEDGMENT BY INDIVIDUAL ……96

ACKNOWLEDGMENT BY COMMISSIONER ……97

AUTHORITY ……98
COMPTROLLER'S CERTIFICATE ……98
MAYOR'S CERTIFICATE ……99
PERFORMANCE BOND #1 ……100
PERFORMANCE BOND #2……104
PAYMENT BOND ……108

(NO TEXT ON THIS PAGE)

WITNESSETH:

The parties, in consideration of the mutual agreements contained herein, agree as follows:

CHAPTER I: THE CONTRACT AND DEFINITIONS

ARTICLE 1. THE CONTRACT

1.1 Except for titles, subtitles, headings, running headlines, tables of contents and indices (all of which are printed herein merely for convenience), the following, except for such portions thereof as may be specifically excluded, shall be deemed to be part of this **Contract**:

1.1.1 All provisions required by law to be inserted in this **Contract**, whether actually inserted or not;

1.1.2 The Contract Drawings and Specifications;

1.1.3 The General Conditions and Special Conditions, if any;

1.1.4 The **Contract**;

1.1.5 The Information for Bidders; Request for Proposals; Notice of Solicitation and Proposal For Bids; Bid or Proposal, and, if used, the Bid Booklet;

1.1.6 All Addenda issued prior to the receipt of the bids; the Notice of Award; Performance and Payment Bonds, if required; and the Notice to Proceed or the Order to Work.

1.2 Should any conflict occur in or between the Drawings and Specifications, the **Contractor** shall be deemed to have estimated the most expensive way of doing the **Work**, unless the **Contractor** shall have asked for and obtained a decision in writing from the **Commissioner** of the **Agency** that is entering into this **Contract**, before the submission of its bid, as to what shall govern.

ARTICLE 2. DEFINITIONS

2.1 The following words and expressions, or pronouns used in their stead, shall, wherever they appear in this Contract, be construed as follows, unless a different meaning is clear from the context:

2.1.1 **"Addendum"** or **"Addenda"** shall mean the additional Contract provisions and/or technical clarifications issued in writing by the Commissioner prior to the receipt of bids.

2.1.2 **"Agency"** shall mean a city, county, borough or other office, position, department, division, bureau, board or commission, or a corporation, institution or agency of government, the expenses of which are paid in whole or in part from the City treasury.

2.1.3 **"Agency Chief Contracting Officer" (ACCO)** shall mean a person delegated authority by the Commissioner to organize and supervise the procurement activity of subordinate Agency staff in conjunction with the CCPO, or his/her duly authorized representative.

2.1.4 **"Allowance"** shall mean a sum of money which the Agency may include in the total amount of the Contract for such specific contingencies as the Agency believes may be necessary to complete the Work, *e.g.*, lead or asbestos remediation, and for which the Contractor will be paid on the basis of stipulated unit prices or a formula set forth in the Contract or negotiated between the parties provided, however, that if the Contractor is not directed to use the Allowance, the Contractor shall have no right to such money and it shall be deducted from the total amount of the Contract.

2.1.5 **"City"** shall mean the City of New York.

2.1.6 **"City Chief Procurement Officer" (CCPO)** shall mean a person delegated authority by the Mayor to coordinate and oversee the procurement activity of Mayoral agency staff, including the ACCO and any offices which have oversight responsibility for the procurement of construction, or his/her duly authorized representative.

2.1.7 **"Commissioner"** shall mean the head of the Agency that has entered into this Contract, or his/her duly authorized representative.

2.1.8 **"Comptroller"** shall mean the Comptroller of the City of New York.

2.1.9 **"Contract"** or **"Contract Documents"** shall mean each of the various parts of the contract referred to in Article 1 hereof, both as a whole and severally.

2.1.10 **"Contract Drawings"** shall mean only those drawings specifically entitled as such and listed in the Specifications or in any Addendum, or any drawings furnished by the Commissioner, pertaining or supplemental thereto.

2.1.11 **"Contract Work"** shall mean everything required to be furnished and done by the Contractor by any one or more of the parts of the Contract referred to in Article 1, except Extra Work as hereinafter defined.

2.1.12 **"Contractor"** shall mean the entity which executed this Contract, whether a corporation, firm, partnership, joint venture, individual, or any combination thereof, and its, their, his/her successors, personal representatives, executors, administrators, and assigns, and any person, firm, partnership, joint venture, individual, or corporation which shall at any time be substituted in the place of the Contractor under this Contract.

2.1.13 **"Days"** shall mean calendar days, except where otherwise specified.

2.1.14 **"Engineer"** or **"Architect"** or **"Project Manager"** shall mean the person so designated in writing by the Commissioner in the Notice to Proceed or the Order to Work to act as such in relation to this Contract, including a private Architect or Engineer or Project Manager, as the case may be. Subject to written approval by the Commissioner, the Engineer, Architect or Project Manager may designate an authorized representative.

2.1.15 **"Engineering Audit Officer" (EAO)** shall mean the person so designated by the Commissioner to perform responsible auditing functions hereunder.

2.1.16 **"Extra Work"** shall mean Work other than that required by the Contract at the time of award which is authorized by the Commissioner pursuant to Chapter VI of this Contract.

2.1.17 **"Federal-Aid Contract"** shall mean a contract in which the United States (federal) Government provides financial funding as so designated in the Information for Bidders.

2.1.18 **"Final Acceptance"** shall mean final written acceptance of all the Work by the Commissioner, a copy of which shall be sent to the Contractor.

2.1.19 **"Final Approved Punch List"** shall mean a list, approved pursuant to Article 14.2.2, specifying those items of Work to be completed by the Contractor after Substantial Completion and dates for the completion of each item of Work.

2.1.20 **"Law"** or **"Laws"** shall mean the Constitution of the State of New York, the New York City Charter, the New York City Administrative Code, a statute of the United States or of the State of New York, a local law of the City of New York, any ordinance, rule or regulation having the force of law, or common law.

2.1.21 **"Materialman"** shall mean any corporation, firm, partnership, joint venture, or individual, other than employees of the Contractor, who or which contracts with the Contractor or any Subcontractor, to fabricate or deliver, or who actually fabricates or delivers, plant, materials or equipment to be incorporated in the Work.

2.1.22 **"Means and Methods of Construction"** shall mean the labor, materials, temporary structures, tools, plant, and construction equipment, and the manner and time of their use, necessary to accomplish the result intended by this Contract.

2.1.23**"Notice to Proceed" or "Order to Work"** shall mean the written notice issued by the Commissioner specifying the time for commencement of the Work and the Engineer, Architect or Project Manager.

2.1.24 **"Other Contractor(s)"** shall mean any contractor (other than the entity which executed this Contract or its Subcontractors) who or which has a contract with the City for work on or adjacent to the building or Site of the Work.

2.1.25 **"Payroll Taxes"** shall mean State Unemployment Insurance (SUI), Federal Unemployment Insurance (FUI), and payments pursuant to the Federal Insurance Contributions Act (FICA).

2.1.26 **"Project"** shall mean the public improvement to which this Contract relates.

2.1.27 **"Procurement Policy Board" (PPB)** shall mean the Agency of the City of New York whose function is to establish comprehensive and consistent procurement policies and rules which shall have broad application throughout the City.

2.1.28 **"Required Quantity"** in a unit price Contract shall mean the actual quantity of any item of Work or materials which is required to be performed or furnished in order to comply with the Contract.

2.1.29 **"Resident Engineer"** shall mean the representative of the Commissioner duly designated by the Commissioner to be his/her representative at the site of the Work.

2.1.30 **"Site"** shall mean the area upon or in which the Contractor's operations are carried on, and such other areas adjacent thereto as may be designated as such by the Engineer.

2.1.31 **"Small Tools"** shall mean items that are ordinarily required for a worker's job function, including but not limited to, equipment that ordinarily has no licensing, insurance or substantive storage costs associated with it; such as circular and chain saws, impact drills, threaders, benders, wrenches, socket tools, etc.

2.1.32 **"Specifications"** shall mean all of the directions, requirements, and standards of performance applying to the Work as hereinafter detailed and designated under the Specifications.

2.1.33 **"Subcontractor"** shall mean any person, firm or corporation, other than employees of the Contractor, who or which contracts with the Contractor or with its subcontractors to furnish, or actually furnishes labor, or labor and materials, or labor and equipment, or superintendence, supervision and/or management at the Site. Wherever the word Subcontractor appears, it shall also mean sub-Subcontractor.

2.1.34 **"Substantial Completion"** shall mean the written determination by the Engineer that the Work required under this Contract is substantially, but not entirely, complete and the approval of the **Final Approved Punch List**.

2.1.35 **"Work"** shall mean all services required to complete the Project in accordance with the Contract Documents, including without limitation, labor, material, superintendence, management, administration, equipment, and incidentals, and obtaining any and all permits, certifications and licenses as may be necessary and required to complete the Work, and shall include both Contract Work and Extra Work.

CHAPTER II: THE WORK AND ITS PERFORMANCE

ARTICLE 3. CHARACTER OF THE WORK

3.1 Unless otherwise expressly provided in the **Contract Drawings**, **Specifications,** and **Addenda**, the **Work** shall be performed in accordance with the best modern practice, utilizing, unless otherwise specified in writing, new and unused materials of standard first grade quality and workmanship and design of the highest quality, to the satisfaction of the **Commissioner**.

ARTICLE 4. MEANS AND METHODS OF CONSTRUCTION

4.1 Unless otherwise expressly provided in the **Contract Drawings**, **Specifications,** and **Addenda**, the **Means and Methods of Construction** shall be such as the **Contractor** may choose; subject, however, to the **Engineer's** right to reject the **Means and Methods of Construction** proposed by the **Contractor** which in the opinion of the **Engineer**:

4.1.1 Will constitute or create a hazard to the **Work**, or to persons or property; or

4.1.2 Will not produce finished **Work** in accordance with the terms of the **Contract**; or

4.1.3 Will be detrimental to the overall progress of the **Project**.

4.2 The **Engineer's** approval of the **Contractor's Means and Methods of Construction**, or his/her failure to exercise his/her right to reject such means or methods, shall not relieve the **Contractor**

of its obligation to complete the **Work** as provided in this **Contract**; nor shall the exercise of such right to reject create a cause of action for damages.

ARTICLE 5. COMPLIANCE WITH LAWS

5.1 The **Contractor** shall comply with all **Laws** applicable to this **Contract** and to the **Work** to be done hereunder.

5.2 Procurement Policy Board Rules: This **Contract** is subject to the Rules of the **PPB** ("**PPB** Rules") in effect at the time of the bid opening for this **Contract**. In the event of a conflict between the **PPB** Rules and a provision of this **Contract**, the **PPB** Rules shall take precedence.

5.3 Noise Control Code provisions.

5.3.1 In accordance with the provisions of Section 24-216(b) of the Administrative Code of the **City** ("Administrative Code"), Noise Abatement Contract Compliance, devices and activities which will be operated, conducted, constructed or manufactured pursuant to this **Contract** and which are subject to the provisions of the **City** Noise Control Code shall be operated, conducted, constructed, or manufactured without causing a violation of the Administrative Code. Such devices and activities shall incorporate advances in the art of noise control development for the kind and level of noise emitted or produced by such devices and activities, in accordance with regulations issued by the **Commissioner** of the **City** Department of Environmental Protection.

5.3.2 The **Contractor** agrees to comply with Section 24-219 of the Administrative Code and implementing rules codified at 15 Rules of the City of New York ("RCNY") Section 28-100 *et seq*. In accordance with such provisions, the **Contractor**, if the **Contractor** is the responsible party under such regulations, shall prepare and post a Construction Noise Mitigation Plan at each **Site**, in which the **Contractor** shall certify that all construction tools and equipment have been maintained so that they operate at normal manufacturers operating specifications. If the **Contractor** cannot make this certification, it must have in place an Alternative Noise Mitigation Plan approved by the **City** Department of Environmental Protection. In addition, the **Contractor**'s certified Construction Noise Mitigation Plan is subject inspection by the **City** Department of Environmental Protection in accordance with Section 28-101 of Title 15 of RCNY. No **Contract Work** may take place at a **Site** unless there is a Construction Noise Mitigation Plan or approved Alternative Noise Mitigation Plan in place. In addition, the **Contractor** shall create and implement a noise mitigation training program. Failure to comply with these requirements may result in fines and other penalties pursuant to the applicable provisions of the Administrative Code and RCNY.

5.4 Ultra Low Sulfur Diesel Fuel: In accordance with the provisions of Section 24-163.3 of the Administrative Code, the **Contractor** specifically agrees as follows:

5.4.1 Definitions. For purposes of this Article 5.4, the following definitions apply:

5.4.1(a) "Contractor" means any person or entity that enters into a Public Works Contract with a **City Agency**, or any person or entity that enters into an agreement with such person or entity, to perform work or provide labor or services related to such Public Works Contract.

5.4.1(b) "Motor Vehicle" means any self-propelled vehicle designed for transporting persons or property on a street or highway.

5.4.1(c) "Nonroad Engine" means an internal combustion engine (including the fuel system) that is not used in a Motor Vehicle or a vehicle used solely for competition, or that is not subject to standards promulgated under Section 7411 or Section 7521 of Title 42 of the United States Code, except that this term shall apply to internal combustion engines used to power generators, compressors or similar equipment used in any construction program or project.

5.4.1(d) "Nonroad Vehicle" means a vehicle that is powered by a Nonroad Engine, fifty (50) horsepower and greater, and that is not a Motor Vehicle or a vehicle used solely for competition, which shall include, but not be limited to, excavators, backhoes, cranes, compressors, generators, bulldozers, and similar equipment, except that this term shall not apply to horticultural maintenance vehicles used for landscaping purposes that are powered by a Nonroad Engine of sixty-five (65) horsepower or less and that are not used in any construction program or project.

5.4.1(e) "Public Works Contract" means a contract with a **City Agency** for a construction program or project involving the construction, demolition, restoration, rehabilitation, repair, renovation, or abatement of any building, structure, tunnel, excavation, roadway, park or bridge; a contract with a **City Agency** for the preparation for any construction program or project involving the construction, demolition, restoration, rehabilitation, repair, renovation, or abatement of any building, structure, tunnel, excavation, roadway, park or bridge; or a contract with a **City Agency** for any final work involved in the completion of any construction program or project involving the construction, demolition, restoration, rehabilitation, repair, renovation, or abatement of any building, structure, tunnel, excavation, roadway, park or bridge.

5.4.1(f) "Ultra Low Sulfur Diesel Fuel" means diesel fuel that has a sulfur content of no more than fifteen parts per million (15 ppm).

5.4.2 Ultra Low Sulfur Diesel Fuel

5.4.2(a) All **Contractors** shall use Ultra Low Sulfur Diesel Fuel in diesel-powered Nonroad Vehicles in the performance of this **Contract**.

5.4.2(b) Notwithstanding the requirements of Article 5.4.2(a), **Contractors** may use diesel fuel that has a sulfur content of no more than thirty parts per million (30 ppm) to fulfill the requirements of this Article 5.4.2, where the Commissioner of the **City** Department of Environmental Protection ("DEP Commissioner") has issued a determination that a sufficient quantity of Ultra Low Sulfur Diesel Fuel is not available to meet the needs of **Agencies** and **Contractors**. Any such determination shall expire after six (6) months unless renewed.

5.4.2(c) **Contractors** shall not be required to comply with this Article 5.4.2 where the **City Agency** letting this **Contract** makes a written finding, which is approved, in writing, by the DEP Commissioner, that a sufficient quantity of Ultra Low Sulfur Diesel Fuel, or diesel fuel that has a sulfur content of no more than thirty parts per million (30 ppm) is not available to meet the requirements of Section 24-163.3 of the Administrative Code, provided that such **Contractor** in its fulfillment of the

requirements of this **Contract**, to the extent practicable, shall use whatever quantity of Ultra Low Sulfur Diesel Fuel or diesel fuel that has a sulfur content of no more than thirty parts per million (30 ppm) is available. Any finding made pursuant to this Article 5.4.2(c) shall expire after sixty (60) **Days**, at which time the requirements of this Article 5.4.2 shall be in full force and effect unless the **City Agency** renews the finding in writing and such renewal is approved by the DEP Commissioner.

5.4.2(d) **Contractors** may check on determinations and approvals issued by the DEP Commissioner pursuant to Section 24-163.3 of the Administrative Code, if any, at www.dep.nyc.gov or by contacting the **City Agency** letting this **Contract**.

5.4.2(e) The requirements of this Article 5.4.2 do not apply where they are precluded by federal or State funding requirements or where the **Contract** is an emergency procurement.

5.4.3 Best Available Technology

5.4.3(a) All **Contractors** shall utilize the best available technology for reducing the emission of pollutants for diesel-powered Nonroad Vehicles in the performance of this **Contract**. For determinations of best available technology for each type of diesel-powered Nonroad Vehicle, **Contractors** shall comply with the regulations of the **City** Department of Environmental Protection, as and when adopted, Chapter 14 of Title 15 of the Rules of the City of New York (RCNY). The **Contractor** shall fully document all steps in the best available technology selection process and shall furnish such documentation to the **City Agency** or the DEP Commissioner upon request. The **Contractor** shall retain all documentation generated in the best available technology selection process for as long as the selected best available technology is in use.

5.4.3(b) No **Contractor** shall be required to replace best available technology for reducing the emission of pollutants or other authorized technology utilized for a diesel-powered Nonroad Vehicle in accordance with the provisions of this Article 5.4.3 within three (3) years of having first utilized such technology for such vehicle.

5.4.3(c) This Article 5.4.3 shall not apply to any vehicle used to satisfy the requirements of a specific Public Works Contract for fewer than twenty (20) **Days**.

5.4.3(d) The **Contractor** shall not be required to comply with this Article 5.4.3 with respect to a diesel-powered Nonroad Vehicle under the following circumstances:

5.4.3(d)(i) Where the **City Agency** makes a written finding, which is approved, in writing, by the DEP Commissioner, that the best available technology for reducing the emission of pollutants as required by this Article 5.4.3 is unavailable for such vehicle, the **Contractor** shall use whatever technology for reducing the emission of pollutants, if any, is available and appropriate for such vehicle.

5.4.3(d)(ii) Where the DEP Commissioner has issued a written waiver based upon the **Contractor** having demonstrated to the DEP Commissioner that the use of the best available technology for reducing the emission of pollutants might endanger the operator of such vehicle or those working near such vehicle, due to engine malfunction, the **Contractor** shall use whatever technology for

reducing the emission of pollutants, if any, is available and appropriate for such vehicle, which would not endanger the operator of such vehicle or those working near such vehicle.

5.4.3(d)(iii) In determining which technology to use for the purposes of Articles 5.4.3(d)(i) and 5.4.3(d)(ii) above, the **Contractor** shall primarily consider the reduction in emissions of particulate matter and secondarily consider the reduction in emissions of nitrogen oxides associated with the use of such technology, which shall in no event result in an increase in the emissions of either such pollutant.

5.4.3(d)(iv) The **Contractor** shall submit requests for a finding or a waiver pursuant to this Article 5.4.3(d) in writing to the DEP Commissioner, with a copy to the **ACCO** of the **City Agency** letting this **Contract**. Any finding or waiver made or issued pursuant to Articles 5.4.3(d)(i) and 5.4.3(d)(ii) above shall expire after one hundred eighty (180) **Days**, at which time the requirements of Article 5.4.3(a) shall be in full force and effect unless the **City Agency** renews the finding, in writing, and the DEP Commissioner approves such finding, in writing, or the DEP Commissioner renews the waiver, in writing.

5.4.3(e) The requirements of this Article 5.4.3 do not apply where they are precluded by federal or State funding requirements or where the **Contract** is an emergency procurement.

5.4.4 Section 24-163 of the Administrative Code. The **Contractor** shall comply with Section 24-163 of the Administrative Code related to the idling of the engines of motor vehicles while parking.

5.4.5 Compliance

5.4.5(a) The **Contractor's** compliance with Article 5.4 may be independently monitored. If it is determined that the **Contractor** has failed to comply with any provision of Article 5.4, any costs associated with any independent monitoring incurred by the **City** shall be reimbursed by the **Contractor**.

5.4.5(b) Any **Contractor** who violates any provision of Article 5.4, except as provided in Article 5.4.5(c) below, shall be liable for a civil penalty between the amounts of one thousand ($1,000) and ten thousand ($10,000) dollars, in addition to twice the amount of money saved by such **Contractor** for failure to comply with Article 5.4.

5.4.5(c) No **Contractor** shall make a false claim with respect to the provisions of Article 5.4 to a **City Agency**. Where a **Contractor** has been found to have done so, such **Contractor** shall be liable for a civil penalty of twenty thousand ($20,000) dollars, in addition to twice the amount of money saved by such **Contractor** in association with having made such false claim.

5.4.6 Reporting

5.4.6(a) For all Public Works Contracts covered by this Article 5.4, the **Contractor** shall report to the **City Agency** the following information:

5.4.6(a)(i) The total number of diesel-powered Nonroad Vehicles used to fulfill the requirements of this Public Works Contract;

5.4.6(a)(ii) The number of such Nonroad Vehicles that were powered by Ultra Low Sulfur Diesel Fuel;

5.4.6(a)(iii) The number of such Nonroad Vehicles that utilized the best available technology for reducing the emission of pollutants, including a breakdown by vehicle model and the type of technology;

5.4.6(a)(iv) The number of such Nonroad Vehicles that utilized such other authorized technology in accordance with Article 5.4.3, including a breakdown by vehicle model and the type of technology used for each such vehicle;

5.4.6(a)(v) The locations where such Nonroad Vehicles were used; and

5.4.6(a)(vi) Where a determination is in effect pursuant to Article 5.4.2(b) or 5.4.2(c), detailed information concerning the **Contractor's** efforts to obtain Ultra Low Sulfur Diesel Fuel or diesel fuel that has a sulfur content of no more than thirty parts per million (30 ppm).

5.4.6(b) The **Contractor** shall submit the information required by Article 5.4.6(a) at the completion of **Work** under the Public Works Contract and on a yearly basis no later than August 1 throughout the term of the Public Works Contract. The yearly report shall cover **Work** performed during the preceding fiscal year (July 1 - June 30).

5.5 Ultra Low Sulfur Diesel Fuel. In accordance with the Coordinated Construction Act for Lower Manhattan, as amended:

5.5.1 Definitions. For purposes of this Article 5.5, the following definitions apply:

5.5.1(a) "Lower Manhattan" means the area to the south of and within the following lines: a line beginning at a point where the United States pierhead line in the Hudson River as it exists now or may be extended would intersect with the southerly line of West Houston Street in the Borough of Manhattan extended, thence easterly along the southerly side of West Houston Street to the southerly side of Houston Street, thence easterly along the southerly side of Houston Street to the southerly side of East Houston Street, thence northeasterly along the southerly side of East Houston Street to the point where it would intersect with the United States pierhead line in the East River as it exists now or may be extended, including tax lots within or immediately adjacent thereto.

5.5.1(b) "Lower Manhattan Redevelopment Project" means any project in Lower Manhattan that is funded in whole or in part with federal or State funding, or any project intended to improve transportation between Lower Manhattan and the two air terminals in the **City** known as LaGuardia Airport and John F. Kennedy International Airport, or between Lower Manhattan and the air terminal in Newark known as Newark Liberty International Airport, and that is funded in whole or in part with federal funding.

5.5.1(c) "Nonroad Engine" means an internal combustion engine (including the fuel system) that is not used in a Motor Vehicle or a vehicle used solely for competition, or that is not subject to standards promulgated under Section 7411 or Section 7521 of Title 42 of the United States Code, except that this term shall apply to internal combustion engines used to power generators, compressors or similar equipment used in any construction program or project.

5.5.1(d) "Nonroad Vehicle" means a vehicle that is powered by a Nonroad Engine, fifty (50) horsepower (HP) and greater, and that is not a Motor Vehicle or a vehicle used solely for competition, which shall include, but not be limited to, excavators, backhoes, cranes, compressors, generators, bulldozers, and similar equipment, except that this terms shall not apply to horticultural maintenance vehicles used for landscaping purposes that are powered by a Nonroad Engine of sixty-five (65) HP or less and that are not used in any construction program or project.

5.5.1(e) "Ultra Low Sulfur Diesel Fuel" means diesel fuel that has a sulfur content of no more than fifteen parts per million (15 ppm).

5.5.2 Requirements. **Contractors** and **Subcontractors** are required to use only Ultra Low Sulfur Diesel Fuel to power the diesel-powered Nonroad Vehicles with engine HP rating of fifty (50) HP and above used on a Lower Manhattan Redevelopment Project and, where practicable, to reduce the emission of pollutants by retrofitting such Nonroad Vehicles with oxidation catalysts, particulate filters, or technology that achieves lowest particulate matter emissions.

5.6 Pesticides. In accordance with Section 17-1209 of the Administrative Code, to the extent that the **Contractor** or any **Subcontractor** applies pesticides to any property owned or leased by the **City**, the **Contractor,** and any **Subcontractor** shall comply with Chapter 12 of the Administrative Code.

5.7 Waste Treatment, Storage, and Disposal Facilities and Transporters. In connection with the **Work**, the **Contractor** and any **Subcontractor** shall use only those waste treatment, storage, and disposal facilities and waste transporters that possess the requisite license, permit or other governmental approval necessary to treat, store, dispose, or transport the waste, materials or hazardous substances.

5.8 Environmentally Preferable Purchasing. The **Contractor** shall ensure that products purchased or leased by the **Contractor** or any **Subcontractor** for the **Work** that are not specified by the **City** or are submitted as equivalents to a product specified by the **City** comply with the requirements of the New York City Environmentally Preferable Purchasing Program contained in Chapter 11 of Title 43 of the RCNY, pursuant to Chapter 3 of Title 6 of the Administrative Code.

ARTICLE 6. INSPECTION

6.1 During the progress of the **Work** and up to the date of **Final Acceptance**, the **Contractor** shall at all times afford the representatives of the **City** every reasonable, safe, and proper facility for inspecting all **Work** done or being done at the **Site** and also for inspecting the manufacture or preparation of materials and equipment at the place of such manufacture or preparation.

6.2 The **Contractor's** obligation hereunder shall include the uncovering or taking down of finished **Work** and its restoration thereafter; provided, however, that the order to uncover, take down and restore shall be in writing, and further provided that if **Work** thus exposed proves satisfactory, and if the **Contractor** has complied with Article 6.1, such uncovering or taking down and restoration shall be

considered an item of **Extra Work** to be paid for in accordance with the provisions of Article 26. If the **Work** thus exposed proves unsatisfactory, the **City** has no obligation to compensate the **Contractor** for the uncovering, taking down or restoration.

6.3 Inspection and approval by the **Commissioner**, the **Engineer**, **Project Manager**, or **Resident Engineer**, of finished **Work** or of **Work** being performed, or of materials and equipment at the place of manufacture or preparation, shall not relieve the **Contractor** of its obligation to perform the **Work** in strict accordance with the **Contract**. Finished or unfinished **Work** not found to be in strict accordance with the **Contract** shall be replaced as directed by the **Engineer**, even though such **Work** may have been previously approved and paid for. Such corrective **Work** is **Contract Work** and shall not be deemed **Extra Work**.

6.4 Rejected **Work** and materials shall be promptly taken down and removed from the **Site**, which must at all times be kept in a reasonably clean and neat condition.

ARTICLE 7. PROTECTION OF WORK AND OF PERSONS AND PROPERTY; NOTICES AND INDEMNIFICATION

7.1 During the performance of the **Work** and up to the date of **Final Acceptance**, the **Contractor** shall be under an absolute obligation to protect the finished and unfinished **Work** against any damage, loss, injury, theft and/or vandalism and in the event of such damage, loss, injury, theft and/or vandalism, it shall promptly replace and/or repair such **Work** at the **Contractor's** sole cost and expense, as directed by the **Resident Engineer**. The obligation to deliver finished **Work** in strict accordance with the **Contract** prior to **Final Acceptance** shall be absolute and shall not be affected by the **Resident Engineer's** approval of, or failure to prohibit, the **Means and Methods of Construction** used by the **Contractor**.

7.2 During the performance of the **Work** and up to the date of **Final Acceptance**, the **Contractor** shall take all reasonable precautions to protect all persons and the property of the **City** and of others from damage, loss or injury resulting from the **Contractor's**, and/or its **Subcontractors'** operations under this **Contract.** The **Contractor's** obligation to protect shall include the duty to provide, place or replace, and adequately maintain at or about the **Site** suitable and sufficient protection such as lights, barricades, and enclosures.

7.3 The **Contractor** shall comply with the notification requirements set forth below in the event of any loss, damage or injury to **Work**, persons or property, or any accidents arising out of the operations of the **Contractor** and/or its **Subcontractors** under this **Contract**.

7.3.1 The **Contractor** shall make a full and complete report in writing to the **Resident Engineer** within three (3) **Days** after the occurrence.

7.3.2 The **Contractor** shall also send written notice of any such event to all insurance carriers that issued potentially responsive policies (including commercial general liability insurance carriers for events relating to the **Contractor**'s own employees) no later than twenty (20) days after such event and again no later than twenty (20) days after the initiation of any claim and/or action resulting therefrom. Such notice shall contain the following information: the number of the insurance policy, the name of the Named Insured, the date and location of the incident, and the identity of the persons injured or property damaged. For any policy on which the **City** and/or the **Engineer**, **Architect**, or **Project Manager** are Additional Insureds, such notice shall expressly specify that "this notice is

being given on behalf of the City of New York as Additional Insured, such other Additional Insureds, as well as the Named Insured."

7.3.2(a) Whenever such notice is sent under a policy on which the **City** is an Additional Insured, the **Contractor** shall provide copies of the notice to the **Comptroller,** the **Commissioner** and the **City** Corporation Counsel. The copy to the **Comptroller** shall be sent to the Insurance Unit, NYC Comptroller's Office, 1 Centre Street – Room 1222, New York, New York, 10007. The copy to the **Commissioner** shall be sent to the address set forth in Schedule A of the General Conditions. The copy to the **City** Corporation Counsel shall be sent to Insurance Claims Specialist, Affirmative Litigation Division, New York City Law Department, 100 Church Street, New York, New York 10007.

7.3.2(b) If the **Contractor** fails to provide any of the foregoing notices to any appropriate insurance carrier(s) in a timely and complete manner, the **Contractor** shall indemnify the **City** for all losses, judgments, settlements, and expenses, including reasonable attorneys' fees, arising from an insurer's disclaimer of coverage citing late notice by or on behalf of the **City**.

7.4 To the fullest extent permitted by law, the **Contractor** shall defend, indemnify, and hold the **City**, its employees, and officials (the "Indemnitees") harmless against any and all claims (including but not limited to claims asserted by any employee of the **Contractor** and/or its **Subcontractors**) and costs and expenses of whatever kind (including but not limited to payment or reimbursement of attorneys' fees and disbursements) allegedly arising out of or in any way related to the operations of the **Contractor** and/or its **Subcontractors** in the performance of this **Contract** or from the **Contractor's** and/or its **Subcontractors'** failure to comply with any of the provisions of this **Contract** or of the **Law**. Such costs and expenses shall include all those incurred in defending the underlying claim and those incurred in connection with the enforcement of this Article 7.4 by way of cross-claim, third-party claim, declaratory action or otherwise. The parties expressly agree that the indemnification obligation hereunder contemplates (1) full indemnity in the event of liability imposed against the Indemnitees without negligence and solely by reason of statute, operation of **Law** or otherwise; and (2) partial indemnity in the event of any actual negligence on the part of the Indemnitees either causing or contributing to the underlying claim (in which case, indemnification will be limited to any liability imposed over and above that percentage attributable to actual fault whether by statute, by operation of **Law**, or otherwise). Where partial indemnity is provided hereunder, all costs and expenses shall be indemnified on a pro rata basis.

7.4.1 Indemnification under Article 7.4 or any other provision of the **Contract** shall operate whether or not **Contractor** or its **Subcontractors** have placed and maintained the insurance specified under Article 22.

7.5 The provisions of this Article 7 shall not be deemed to create any new right of action in favor of third parties against the **Contractor** or the **City**.

CHAPTER III: TIME PROVISIONS

ARTICLE 8. COMMENCEMENT AND PROSECUTION OF THE WORK

8.1 The **Contractor** shall commence the **Work** on the date specified in the **Notice to Proceed** or the **Order to Work**. The time for performance of the **Work** under the **Contract** shall be computed from

the date specified in the **Notice to Proceed** or the **Order to Work**. **TIME BEING OF THE ESSENCE** to the **City**, the **Contractor** shall thereafter prosecute the **Work** diligently, using such **Means and Methods of Construction** as are in accord with Article 4 herein and as will assure its completion not later than the date specified in this Contract, or on the date to which the time for completion may be extended.

ARTICLE 9. PROGRESS SCHEDULES

9.1 To enable the **Work** to be performed in an orderly and expeditious manner, the **Contractor**, within fifteen (15) **Days** after the **Notice to Proceed** or **Order to Work**, unless otherwise directed by the **Engineer**, shall submit to the **Engineer** a proposed progress schedule based on the Critical Path Method in the form of a bar graph or in such other form as specified by the **Engineer**, and monthly cash flow requirements, showing:

9.1.1 The anticipated time of commencement and completion of each of the various operations to be performed under this **Contract**; and

9.1.2 The sequence and interrelation of each of these operations with the others and with those of other related contracts; and

9.1.3 The estimated time required for fabrication or delivery, or both, of all materials and equipment required for the **Work**, including the anticipated time for obtaining required approvals pursuant to Article 10; and

9.1.4 The estimated amount in dollars the **Contractor** will claim on a monthly basis.

9.2 The proposed schedule shall be revised as directed by the **Engineer**, until finally approved by the **Engineer**, and after such approval, subject to the provisions of Article 11, shall be strictly adhered to by the **Contractor**.

9.3 If the **Contractor** shall fail to adhere to the approved progress schedule, or to the schedule as revised pursuant to Article 11, it shall promptly adopt such other or additional **Means and Methods of Construction**, at its sole cost and expense, as will make up for the time lost and will assure completion in accordance with the approved progress schedule. The approval by the **City** of a progress schedule which is shorter than the time allotted under the **Contract** shall not create any liability for the **City** if the approved progress schedule is not met.

9.4 The **Contractor** will not receive any payments until the proposed progress schedule is submitted.

ARTICLE 10. REQUESTS FOR INFORMATION OR APPROVAL

10.1 From time to time as the **Work** progresses and in the sequence indicated by the approved progress schedule, the **Contractor** shall submit to the **Engineer** a specific request in writing for each item of information or approval required by the **Contractor**. These requests shall state the latest date upon which the information or approval is actually required by the **Contractor**, and shall be submitted in a reasonable time in advance thereof to provide the **Engineer** a sufficient time to act upon such submissions, or any necessary re-submissions thereof.

10.2 The **Contractor** shall not have any right to an extension of time on account of delays due to the **Contractor's** failure to submit requests for the required information or the required approval in accordance with the above requirements.

ARTICLE 11. NOTICE OF CONDITIONS CAUSING DELAY AND DOCUMENTATION OF DAMAGES CAUSED BY DELAY

11.1 After the commencement of any condition which is causing or may cause a delay in completion of the **Work**, including conditions for which the **Contractor** may be entitled to an extension of time, the following notifications and submittals are required:

11.1.1 Within fifteen (15) **Days** after the **Contractor** becomes aware or reasonably should be aware of each such condition, the **Contractor** must notify the **Resident Engineer** or **Engineer**, as directed by the **Commissioner**, in writing of the existence, nature and effect of such condition upon the approved progress schedule and the **Work**, and must state why and in what respects, if any, the condition is causing or may cause a delay. Such notice shall include a description of the construction activities that are or could be affected by the condition and may include any recommendations the **Contractor** may have to address the delay condition and any activities the **Contractor** may take to avoid or minimize the delay.

11.1.2 If the **Contractor** shall claim to be sustaining damages for delay as provided for in this Article 11,within forty-five (45) **Days** from the time such damages are first incurred for each such condition, the **Contractor** shall submit to the **Commissioner** a verified written statement of the details and estimates of the amounts of such damages, including categories of expected damages and projected monthly costs, together with documentary evidence of such damages as the **Contractor** may have at the time of submission ("statement of delay damages"), as further detailed in Article 11.6. The **Contractor** may submit the above statement within such additional time as may be granted by the **Commissioner** in writing upon written request therefor.

11.1.3 Articles 11.1.1 and 11.1.2 do not relieve the **Contractor** of its obligation to comply with the provisions of Article 44.

11.2 Failure of the **Contractor** to strictly comply with the requirements of Article 11.1.1 may, in the discretion of the **Commissioner**, be deemed sufficient cause to deny any extension of time on account of delay arising out of such condition. Failure of the **Contractor** to strictly comply with the requirements of both Articles 11.1.1 and 11.1.2 shall be deemed a conclusive waiver by the **Contractor** of any and all claims for damages for delay arising from such condition and no right to recover on such claims shall exist.

11.3 When appropriate and directed by the **Engineer**, the progress schedule shall be revised by the **Contractor** until finally approved by the **Engineer**. The revised progress schedule must be strictly adhered to by the **Contractor**.

11.4 Compensable Delays

11.4.1 The **Contractor** agrees to make claim only for additional costs attributable to delay in the performance of this **Contract** necessarily extending the time for completion of the **Work** or resulting from acceleration directed by the **Commissioner** and required to maintain the progress schedule, occasioned solely by any act or omission to act of the **City** listed below. The **Contractor** also agrees that delay from any other cause shall be

compensated, if at all, solely by an extension of time to complete the performance of the **Work**.

11.4.1.1 The failure of the **City** to take reasonable measures to coordinate and progress the **Work** to the extent required by the **Contract**, except that the City shall not be responsible for the **Contractor's** obligation to coordinate and progress the **Work** of its **Subcontractors**.

11.4.1.2 Unreasonable delays attributable to the review of shop drawings, the issuance of change orders, or the cumulative impact of change orders that were not brought about by any act or omission of the **Contractor**.

11.4.1.3 The unavailability of the **Site** caused by acts or omissions of the **City**..

11.4.1.4 The issuance by the **Engineer** of a stop work order that was not brought about through any act or omission of the **Contractor**.

11.4.1.5 Differing site conditions or environmental hazards that were neither known nor reasonably ascertainable on a pre-bid inspection of the **Site** or review of the bid documents or other publicly available sources, and that are not ordinarily encountered in the **Project**'s geographical area or neighborhood or in the type of **Work** to be performed.

11.4.1.6 Delays caused by the **City's** bad faith or its willful, malicious, or grossly negligent conduct;

11.4.1.7 Delays not contemplated by the parties;

11.4.1.8 Delays so unreasonable that they constitute an intentional abandonment of the **Contract** by the **City**; and

11.4.1.9 Delays resulting from the **City's** breach of a fundamental obligation of the **Contract**.

11.4.2 No claim may be made for any alleged delay in **Substantial Completion** of the **Work** if the **Work** will be or is substantially completed by the date of **Substantial Completion** provided for in Schedule A unless acceleration has been directed by the **Commissioner** to meet the date of **Substantial Completion** set forth in Schedule A, or unless there is a provision in the **Contract** providing for additional compensation for early completion.

11.4.3 The provisions of this Article 11 apply only to claims for additional costs attributable to delay and do not preclude determinations by the **Commissioner** allowing reimbursements for additional costs for **Extra Work** pursuant to Articles 25 and 26 of this **Contract**. To the extent that any cost attributable to delay is reimbursed as part of a change order, no additional claim for compensation under this Article 11 shall be allowed.

11.5 Non-Compensable Delays. The **Contractor** agrees to make no claim for, and is deemed to have included in its bid prices for the various items of the **Contract**, the extra/additional costs attributable to any delays caused by or attributable to the items set forth below. For such items, the **Contractor** shall be compensated, if at all, solely by an extension of time to complete the performance of the **Work**, in accordance with the provisions of Article 13. Such extensions of time will be granted, if at all, pursuant to the grounds set forth in Article 13.3.

11.5.1 The acts or omissions of any third parties, including but not limited to **Other Contractors**, public/ governmental bodies (other than **City Agencies**), utilities or private enterprises, who are disclosed in the **Contract Documents** or are ordinarily encountered or generally recognized as related to the **Work**;

11.5.2 Any situation which was within the contemplation of the parties at the time of entering into the **Contract**, including any delay indicated or disclosed in the **Contract Documents** or that would be generally recognized by a reasonably prudent contractor as related to the nature of the **Work**, and/or the existence of any facility or appurtenance owned, operated or maintained by any third party, as indicated or disclosed in the **Contract Documents** or ordinarily encountered or generally recognized as related to the nature of the **Work**;

11.5.3 Restraining orders, injunctions or judgments issued by a court which were caused by a Contractor's submission, action or inaction or by a Contractor's **Means and Methods of Construction**, or by third parties, unless such order, injunction or judgment was the result of an act or omission by the **City**;

11.5.4 Any labor boycott, strike, picketing, lockout or similar situation;

11.5.5 Any shortages of supplies or materials, or unavailability of equipment, required by the **Contract Work**;

11.5.6 Climatic conditions, storms, floods, droughts, tidal waves, fires, hurricanes, earthquakes, landslides or other catastrophes or acts of God, or acts of war or of the public enemy or terrorist acts, including the **City's** reasonable responses thereto; and

11.5.7 **Extra Work** which does not significantly affect the overall completion of the **Contract**, reasonable delays in the review or issuance of change orders or field orders and/or in shop drawing reviews or approvals.

11.6 Required Content of Submission of Statement of Delay Damages

11.6.1 In the verified written statement of delay damages required by Article 11.1.2, the following information shall be provided by the **Contractor**:

11.6.1.1 For each delay, the start and end dates of the claimed periods of delay and, in addition, a description of the operations that were delayed, an explanation of how they were delayed, and the reasons for the delay, including identifying the applicable act or omission of the City listed in Article 11.4.

11.6.1.2 A detailed factual statement of the claim providing all necessary dates, locations and items of **Work** affected by the claim.

11.6.1.3 The estimated amount of additional compensation sought and a breakdown of that amount into categories as described in Article 11.7.

11.6.1.4 Any additional information requested by the **Commissioner**.

11.7 Recoverable Costs

11.7.1 Delay damages may be recoverable for the following costs actually and necessarily incurred in the performance of the **Work**:

11.7.1.1 Direct labor, including payroll taxes (subject to statutory wage caps) and supplemental benefits, based on time and materials records;

11.7.1.2 Necessary materials (including transportation to the **Site**), based on time and material records;

11.7.1.3 Reasonable rental value of necessary plant and equipment other than small tools, plus fuel/energy costs according to the applicable formula set forth in Articles 26.2.4 and/or 26.2.8, based on time and material records;

11.7.1.4 Additional insurance and bond costs;

11.7.1.5 Extended **Site** overhead, field office rental, salaries of field office staff, on-site project managers and superintendents, field office staff vehicles, **Project-**specific storage, field office utilities and telephone, and field office consumables;

11.7.1.6 Labor escalation costs based on actual costs;

11.7.1.7 Materials and equipment escalation costs based on applicable industry indices unless documentation of actual increased cost is provided;

11.7.1.8 Additional material and equipment storage costs based on actual documented costs and additional costs necessitated by extended manufacturer warranty periods; and

11.7.1.9 Extended home office overhead calculated based on the following formula:

(1) Subtract from the original **Contract** amount the amount earned by original contractual **Substantial Completion** date (not including change orders);

(2) Remove 15% overhead and profit from the calculation in item (1) by dividing the results of item (1) by 1.15;

(3) Multiply the result of item (2) by 7.25% for the total home office overhead;

(4) Multiply the result of item (3) by 7.25% for the total profit; and

(5) The total extended home office overhead will be the total of items (3) and (4).

11.7.2 Recoverable Subcontractor Costs. When the **Work** is performed by a **Subcontractor**, the **Contractor** may be paid the actual and necessary costs of such subcontracted **Work** as outlined above in Articles 11.7.1.1 through 11.7.1.8, and an additional overhead of 5% of the costs outlined in Articles 11.7.1.1 through 11.7.1.3.

11.7.3 Non-Recoverable Costs. The parties agree that the **City** will have no liability for the following items and the **Contractor** agrees it shall make no claim for the following items:

11.7.3.1 Profit, or loss of anticipated or unanticipated profit, except as provided in Article 11.7.1.9;

11.7.3.2 Consequential damages, including, but not limited to, construction or bridge loans or interest paid on such loans, loss of bonding capacity, bidding opportunities, or interest in investment, or any resulting insolvency;

11.7.3.3 Indirect costs or expenses of any nature except those included in Article 11.7.1;

11.7.3.4 Direct or indirect costs attributable to performance of **Work** where the **Contractor**, because of situations or conditions within its control, has not progressed the **Work** in a satisfactory manner; and

11.7.3.5 Attorneys' fees and dispute and claims preparation expenses.

11.8 Any claims for delay under this Article 11 are not subject to the jurisdiction of the Contract Dispute Resolution Board pursuant to the dispute resolution process set forth in Article 27.

11.9 Any compensation provided to the **Contractor** in accordance with this Article 11 will be made pursuant to a claim filed with the **Comptroller**. Nothing in this Article 11 extends the time for the **Contractor** to file an action with respect to a claim within six months after **Substantial Completion** pursuant to Article 56.

ARTICLE 12. COORDINATION WITH OTHER CONTRACTORS

12.1 During the progress of the **Work**, **Other Contractors** may be engaged in performing other work or may be awarded other contracts for additional work on this **Project**. In that event, the **Contractor** shall coordinate the **Work** to be done hereunder with the work of such **Other Contractors** and the **Contractor** shall fully cooperate with such **Other Contractors** and carefully fit its own **Work** to that provided under other contracts as may be directed by the **Engineer**. The **Contractor** shall not commit or permit any act which will interfere with the performance of work by any **Other Contractors**.

12.2 If the **Engineer** determines that the **Contractor** is failing to coordinate its **Work** with the work of **Other Contractors** as the **Engineer** has directed, then the **Commissioner** shall have the right to withhold any payments otherwise due hereunder until the **Contractor** completely complies with the **Engineer's** directions.

12.3 The **Contractor** shall notify the **Engineer** in writing if any **Other Contractor** on this **Project** is failing to coordinate its work with the **Work** of this **Contract**. If the **Engineer** finds such charges to be true, the **Engineer** shall promptly issue such directions to the **Other Contractor** with respect thereto as the situation may require. The **City** shall not, however, be liable for any damages suffered by any **Other Contractor's** failure to coordinate its work with the **Work** of this **Contract** or by reason of the **Other Contractor's** failure to promptly comply with the directions so issued by the **Engineer**, or by reason of any **Other Contractor's** default in performance, it being understood that the **City** does not guarantee the responsibility or continued efficiency of any contractor. The **Contractor** agrees to make no claim against the **City** for any damages relating to or arising out of any directions issued by the **Engineer** pursuant to this Article 12 (including but not limited to the failure of any **Other Contractor** to comply or promptly comply with such directions), or the failure of any **Other Contractor** to coordinate its work, or the default in performance of any **Other Contractor**.

12.4 The **Contractor** shall indemnify and hold the **City** harmless from any and all claims or judgments for damages and from costs and expenses to which the **City** may be subjected or which it may suffer or incur by reason of the **Contractor's** failure to comply with the **Engineer's** directions promptly; and the **Comptroller** shall have the right to exercise the powers reserved in Article 23 with respect to any claims which may be made for damages due to the **Contractor's** failure to comply with the **Engineer's** directions promptly. Insofar as the facts and **Law** relating to any claim would preclude the **City** from being completely indemnified by the **Contractor**, the **City** shall be partially indemnified by the **Contractor** to the fullest extent provided by **Law**.

12.5 Should the **Contractor** sustain any damage through any act or omission of any **Other Contractor** having a contract with the **City** for the performance of work upon the **Site** or of work which may be necessary to be performed for the proper prosecution of the **Work** to be performed hereunder, or through any act or omission of a subcontractor of such **Other Contractor**, the **Contractor** shall have no claim against the **City** for such damage, but shall have a right to recover such damage from the **Other**

Contractor under the provision similar to the following provisions which apply to this **Contract** and have been or will be inserted in the contracts with such **Other Contractors**:

12.5.1 Should any **Other Contractor** having or who shall hereafter have a contract with the **City** for the performance of work upon the **Site** sustain any damage through any act or omission of the **Contractor** hereunder or through any act or omission of any **Subcontractor** of the **Contractor**, the **Contractor** agrees to reimburse such **Other Contractor** for all such damages and to defend at its own expense any action based upon such claim and if any judgment or claim (even if the allegations of the action are without merit) against the **City** shall be allowed the **Contractor** shall pay or satisfy such judgment or claim and pay all costs and expenses in connection therewith and agrees to indemnify and hold the **City** harmless from all such claims. Insofar as the facts and **Law** relating to any claim would preclude the **City** from being completely indemnified by the **Contractor**, the **City** shall be partially indemnified by the **Contractor** to the fullest extent provided by **Law**.

12.6 The **City's** right to indemnification hereunder shall in no way be diminished, waived or discharged by its recourse to assessment of liquidated damages as provided in Article 15, or by the exercise of any other remedy provided for by **Contract** or by **Law**.

ARTICLE 13. EXTENSION OF TIME FOR PERFORMANCE

13.1 If performance by the **Contractor** is delayed for a reason set forth in Article 13.3, the **Contractor** may be allowed a reasonable extension of time in conformance with this Article 13 and the **PPB** Rules.

13.2 Any extension of time may be granted only by the **ACCO** or by the Board for the Extension of Time (hereafter "Board") (as set forth below) upon written application by the **Contractor**.

13.3 Grounds for Extension: If such application is made, the **Contractor** shall be entitled to an extension of time for delay in completion of the **Work** caused solely:

13.3.1 By the acts or omissions of the **City**, its officials, agents or employees; or

13.3.2 By the act or omissions of **Other Contractors** on this **Project**; or

13.3.3 By supervening conditions entirely beyond the control of either party hereto (such as, but not limited to, acts of God or the public enemy, excessive inclement weather, war or other national emergency making performance temporarily impossible or illegal, or strikes or labor disputes not brought about by any act or omission of the **Contractor**).

13.3.4 The **Contractor** shall, however, be entitled to an extension of time for such causes only for the number of **Days** of delay which the **ACCO** or the Board may determine to be due solely to such causes, and then only if the **Contractor** shall have strictly complied with all of the requirements of Articles 9 and 10.

13.4 The **Contractor** shall not be entitled to receive a separate extension of time for each of several causes of delay operating concurrently, but, if at all, only for the actual period of delay in completion of the **Work** as determined by the **ACCO** or the Board, irrespective of the number of causes contributing to produce such delay. If one of several causes of delay operating concurrently results from any act, fault or omission of the **Contractor** or of its **Subcontractors** or **Materialmen**, and would of itself (irrespective

of the concurrent causes) have delayed the **Work**, no extension of time will be allowed for the period of delay resulting from such act, fault or omission.

13.5 The determination made by the **ACCO** or the Board on an application for an extension of time shall be binding and conclusive on the **Contractor**.

13.6 The **ACCO** or the Board acting entirely within their discretion may grant an application for an extension of time for causes of delay other than those herein referred.

13.7 Permitting the **Contractor** to continue with the **Work** after the time fixed for its completion has expired, or after the time to which such completion may have been extended has expired, or the making of any payment to the **Contractor** after such time, shall in no way operate as a waiver on the part of the **City** of any of its rights under this **Contract**.

13.8 Application for Extension of Time:

13.8.1 Before the **Contractor's** time extension request will be considered, the **Contractor** shall notify the **ACCO** of the condition which allegedly has caused or is causing the delay, and shall submit a written application to the **ACCO** identifying:

13.8.1(a) The **Contractor**; the registration number; and **Project** description;

13.8.1(b) Liquidated damage assessment rate, as specified in the **Contract**;

13.8.1(c) Original total bid price;

13.8.1(d) The original **Contract** start date and completion date;

13.8.1(e) Any previous time extensions granted (number and duration); and

13.8.1(f) The extension of time requested.

13.8.2 In addition, the application for extension of time shall set forth in detail:

13.8.2(a) The nature of each alleged cause of delay in completing the **Work**;

13.8.2(b) The date upon which each such cause of delay began and ended and the number of **Days** attributable to each such cause;

13.8.2(c) A statement that the **Contractor** waives all claims except for those delineated in the application, and the particulars of any claims which the **Contractor** does not agree to waive. For time extensions for **Substantial Completion** and final completion payments, the application shall include a detailed statement of the dollar amounts of each element of claim item reserved; and

13.8.2(d) A statement indicating the **Contractor's** understanding that the time extension is granted only for purposes of permitting continuation of **Contract** performance and payment for **Work** performed and that the **City** retains its right to conduct an investigation and assess liquidated damages as appropriate in the future.

13.9 Analysis and Approval of Time Extensions:

13.9.1 For time extensions for partial payments, a written determination shall be made by the **ACCO** who may, for good and sufficient cause, extend the time for the performance of the **Contract** as follows:

13.9.1(a) If the **Work** is to be completed within six (6) months, the time for performance may be extended for sixty (60) **Days**;

13.9.1(b) If the **Work** is to be completed within less than one (1) year but more than six (6) months, an extension of ninety (90) **Days** may be granted;

13.9.1(c) If the **Contract** period exceeds one (1) year, besides the extension granted in Article 13.9.1(b), an additional thirty (30) **Days** may be granted for each multiple of six (6) months involved beyond the one (1) year period; or

13.9.1(d) If exceptional circumstances exist, the **ACCO** may extend the time for performance beyond the extensions in Articles 13.9.1(a), 13.9.1(b), and 13.9.1(c). In that event, the **ACCO** shall file with the Mayor's Office of Contract Services a written explanation of the exceptional circumstances.

13.9.2 For extensions of time for **Substantial Completion** and final completion payments, the **Engineer**, in consultation with the **ACCO**, shall prepare a written analysis of the delay (including a preliminary determination of the causes of delay, the beginning and end dates for each such cause of delay, and whether the delays are excusable under the terms of this **Contract**). The report shall be subject to review by and approval of the Board, which shall have authority to question its analysis and determinations and request additional facts or documentation. The report as reviewed and made final by the Board shall be made a part of the **Agency** contract file. Neither the report itself nor anything contained therein shall operate as a waiver or release of any claim the **City** may have against the **Contractor** for either actual or liquidated damages.

13.9.3 Approval Mechanism for Time Extensions for **Substantial Completion** or Final Completion Payments: An extension shall be granted only with the approval of the Board which is comprised of the **ACCO** of the **Agency**, the **City** Corporation Counsel, and the **Comptroller**, or their authorized representatives.

13.9.4 Neither the granting of any application for an extension of time to the **Contractor** or any **Other Contractor** on this **Project** nor the papers, records or reports related to any application for or grant of an extension of time or determination related thereto shall be referred to or offered in evidence by the **Contractor** or its attorneys in any action or proceeding.

13.10 No Damage for Delay: The **Contractor** agrees to make no claim for damages for delay in the performance of this **Contract** occasioned by any act or omission to act of the **City** or any of its representatives, except as provided for in Article 11.

ARTICLE 14. COMPLETION AND FINAL ACCEPTANCE OF THE WORK

14.1 Date for **Substantial Completion**: The **Contractor** shall substantially complete the **Work** within the time fixed in Schedule A of the General Conditions, or within the time to which such **Substantial Completion** may be extended.

14.2 Determining the Date of **Substantial Completion**: The **Work** will be deemed to be substantially complete when the two conditions set forth below have been met.

14.2.1 Inspection: The **Engineer** or **Resident Engineer**, as applicable, has inspected the **Work** and has made a written determination that it is substantially complete.

14.2.2 Approval of **Final Approved Punch List** and Date for **Final Acceptance**: Following inspection of the **Work**, the **Engineer/Resident Engineer** shall furnish the **Contractor** with a final punch list, specifying all items of **Work** to be completed and proposing dates for the completion of each specified item of **Work**. The **Contractor** shall then submit in writing to the **Engineer/Resident Engineer** within ten (10) **Days** of the **Engineer/Resident Engineer** furnishing the final punch list either acceptance of the dates or proposed alternative dates for the completion of each specified item of **Work**. If the **Contractor** neither accepts the dates nor proposes alternative dates within ten (10) **Days**, the schedule proposed by the **Engineer/Resident Engineer** shall be deemed accepted. If the **Contractor** proposes alternative dates, then, within a reasonable time after receipt, the **Engineer/Resident Engineer**, in a written notification to the **Contractor**, shall approve the **Contractor's** completion dates or, if they are unable to agree, the **Engineer/Resident Engineer** shall establish dates for the completion of each item of **Work**. The latest completion date specified shall be the date for **Final Acceptance** of the **Work**.

14.3 Date of **Substantial Completion**. The date of approval of the **Final Approved Punch List**, shall be the date of **Substantial Completion**. The date of approval of the **Final Approved Punch List** shall be either (a) if the **Contractor** approves the final punch list and proposed dates for completion furnished by the **Engineer/Resident Engineer**, the date of the **Contractor**'s approval; or (b) if the **Contractor** neither accepts the dates nor proposes alternative dates, ten (10) **Days** after the **Engineer/Resident Engineer** furnishes the **Contractor** with a final punch list and proposed dates for completion; or (c) if the **Contractor** proposes alternative dates, the date that the **Engineer/Resident Engineer** sends written notification to the **Contractor** either approving the **Contractor**'s proposed alternative dates or establishing dates for the completion for each item of **Work**.

14.4 Determining the Date of **Final Acceptance**: The **Work** will be accepted as final and complete as of the date of the **Engineer**'s/**Resident Engineer**'s inspection if, upon such inspection, the **Engineer/Resident Engineer** finds that all items on the **Final Approved Punch List** are complete and no further **Work** remains to be done. The **Commissioner** will then issue a written determination of **Final Acceptance**.

14.5 Request for Inspection: Inspection of the **Work** by the **Engineer/Resident Engineer** for the purpose of **Substantial Completion** or **Final Acceptance** shall be made within fourteen (14) **Days** after receipt of the **Contractor's** written request therefor.

14.6 Request for Re-inspection: If upon inspection for the purpose of **Substantial Completion** or **Final Acceptance**, the **Engineer/Resident Engineer** determines that there are items of **Work** still to be performed, the **Contractor** shall promptly perform them and then request a re-inspection. If upon re-inspection, the **Engineer/Resident Engineer** determines that the **Work** is substantially complete or finally accepted, the date of such re-inspection shall be the date of **Substantial Completion** or **Final Acceptance**. Re-inspection by the **Engineer/Resident Engineer** shall be made within ten (10) **Days** after receipt of the **Contractor's** written request therefor.

14.7 Initiation of Inspection by the **Engineer/Resident Engineer**: If the **Contractor** does not request inspection or re-inspection of the **Work** for the purpose of **Substantial Completion** or **Final Acceptance**, the **Engineer/Resident Engineer** may initiate such inspection or re-inspection.

ARTICLE 15. LIQUIDATED DAMAGES

15.1 In the event the **Contractor** fails to substantially complete the **Work** within the time fixed for such **Substantial Completion** in Schedule A of the General Conditions, plus authorized time extensions, or if the **Contractor**, in the sole determination of the **Commissioner**, has abandoned the **Work**, the **Contractor** shall pay to the **City** the sum fixed in Schedule A of the General Conditions, for each and every **Day** that the time consumed in substantially completing the **Work** exceeds the time allowed therefor; which said sum, in view of the difficulty of accurately ascertaining the loss which the **City** will suffer by reason of delay in the **Substantial Completion** of the **Work** hereunder, is hereby fixed and agreed as the liquidated damages that the **City** will suffer by reason of such delay, and not as a penalty. This Article 15 shall also apply to the **Contractor** whether or not the **Contractor** is defaulted pursuant to Chapter X of this **Contract**. Neither the failure to assess liquidated damages nor the granting of any time extension shall operate as a waiver or release of any claim the **City** may have against the **Contractor** for either actual or liquidated damages.

15.2 Liquidated damages received hereunder are not intended to be nor shall they be treated as either a partial or full waiver or discharge of the **City's** right to indemnification, or the **Contractor's** obligation to indemnify the **City**, or to any other remedy provided for in this **Contract** or by **Law**.

15.3 The **Commissioner** may deduct and retain out of the monies which may become due hereunder, the amount of any such liquidated damages; and in case the amount which may become due hereunder shall be less than the amount of liquidated damages suffered by the **City**, the **Contractor** shall be liable to pay the difference.

ARTICLE 16. OCCUPATION OR USE PRIOR TO COMPLETION

16.1 Unless otherwise provided for in the **Specifications**, the **Commissioner** may take over, use, occupy or operate any part of the **Work** at any time prior to **Final Acceptance**, upon written notification to the **Contractor**. The **Engineer** or **Resident Engineer**, as applicable, shall inspect the part of the **Work** to be taken over, used, occupied, or operated, and will furnish the **Contractor** with a written statement of the **Work**, if any, which remains to be performed on such part. The **Contractor** shall not object to, nor interfere with, the **Commissioner's** decision to exercise the rights granted by Article 16. In the event the **Commissioner** takes over, uses, occupies, or operates any part of the **Work:**

16.1.1 the **Engineer/Resident Engineer** shall issue a written determination of **Substantial Completion** with respect to such part of the **Work**;

16.1.2 the **Contractor** shall be relieved of its absolute obligation to protect such part of the unfinished **Work** in accordance with Article 7;

16.1.3 the **Contractor's** guarantee on such part of the **Work** shall begin on the date of such use by the **City**; and;

16.1.4 the **Contractor** shall be entitled to a return of so much of the amount retained in accordance with Article 21 as it relates to such part of the **Work**, except so much thereof as may be retained under Articles 24 and 44.

CHAPTER IV: SUBCONTRACTS AND ASSIGNMENTS

ARTICLE 17. SUBCONTRACTS

17.1 The **Contractor** shall not make subcontracts totaling an amount more than the percentage of the total **Contract** price fixed in Schedule A of the General Conditions, without prior written permission from the **Commissioner**. All subcontracts made by the **Contractor** shall be in writing. No **Work** may be performed by a **Subcontractor** prior to the **Contractor** entering into a written subcontract with the **Subcontractor** and complying with the provisions of this Article 17.

17.2 Before making any subcontracts, the **Contractor** shall submit a written statement to the **Commissioner** giving the name and address of the proposed **Subcontractor**; the portion of the **Work** and materials which it is to perform and furnish; the cost of the subcontract; the VENDEX questionnaire if required; the proposed subcontract if requested by the **Commissioner**; and any other information tending to prove that the proposed **Subcontractor** has the necessary facilities, skill, integrity, past experience, and financial resources to perform the **Work** in accordance with the terms and conditions of this **Contract**.

17.3 In addition to the requirements in Article 17.2, **Contractor** is required to list the **Subcontractor** in the web based Subcontractor Reporting System through the City's Payee Information Portal (PIP), available at www.nyc.gov/pip.[1] For each **Subcontractor** listed, **Contractor** is required to provide the following information: maximum contract value, description of **Subcontractor's** Work, start and end date of the subcontract and identification of the **Subcontractor**'s industry. Thereafter, **Contractor** will be required to report in the system the payments made to each **Subcontractor** within 30 days of making the payment. If any of the required information changes throughout the Term of the **Contract**, **Contractor** will be required to revise the information in the system.

Failure of the **Contractor** to list a **Subcontractor** and/or to report **Subcontractor** payments in a timely fashion may result in the **Commissioner** declaring the **Contractor** in default of the **Contract** and will subject **Contractor** to liquidated damages in the amount of $100 per day for each day that the **Contractor** fails to identify a **Subcontractor** along with the required information about the **Subcontractor** and/or fails to report payments to a **Subcontractor**, beyond the time frames set forth herein or in the notice from the **City**. Article 15 shall govern the issue of liquidated damages.

17.4 If an approved **Subcontractor** elects to subcontract any portion of its subcontract, the proposed sub-subcontract shall be submitted in the same manner as directed above.

17.5 The **Commissioner** will notify the **Contractor** in writing whether the proposed **Subcontractor** is approved. If the proposed **Subcontractor** is not approved, the **Contractor** may submit another proposed **Subcontractor** unless the **Contractor** decides to do the **Work**. No **Subcontractor** shall be permitted to enter or perform any work on the **Site** unless approved.

17.6 Before entering into any subcontract hereunder, the **Contractor** shall provide the proposed **Subcontractor** with a complete copy of this document and inform the proposed **Subcontractor** fully and completely of all provisions and requirements of this **Contract** relating either directly or indirectly to the **Work** to be performed and the materials to be furnished under such subcontract, and every such

[1] In order to use the new system, a PIP account will be required. Detailed instructions on creating a PIP account and using the new system are also available at www.nyc.gov/pip. Additional assistance with PIP may be obtained by emailing the Financial Information Services Agency Help Desk at pip@fisa.nyc.gov.

Subcontractor shall expressly stipulate that all labor performed and materials furnished by the **Subcontractor** shall strictly comply with the requirements of this **Contract**.

17.7 Documents given to a prospective **Subcontractor** for the purpose of soliciting the **Subcontractor's** bid shall include either a copy of the bid cover or a separate information sheet setting forth the **Project** name, the **Contract** number (if available), the **Agency** (as noted in Article 2.1.6), and the **Project's** location.

17.8 The **Commissioner's** approval of a **Subcontractor** shall not relieve the **Contractor** of any of its responsibilities, duties, and liabilities hereunder. The **Contractor** shall be solely responsible to the **City** for the acts or defaults of its **Subcontractor** and of such **Subcontractor's** officers, agents, and employees, each of whom shall, for this purpose, be deemed to be the agent or employee of the **Contractor** to the extent of its subcontract.

17.9 If the **Subcontractor** fails to maintain the necessary facilities, skill, integrity, past experience, and financial resources (other than due to the **Contractor's** failure to make payments where required) to perform the **Work** in accordance with the terms and conditions of this **Contract**, the **Contractor** shall promptly notify the **Commissioner** and replace such **Subcontractor** with a newly approved **Subcontractor** in accordance with this Article 17.

17.10 The **Contractor** shall be responsible for ensuring that all **Subcontractors** performing **Work** at the **Site** maintain all insurance required by **Law**.

17.11 The **Contractor** shall promptly, upon request, file with the **Engineer** a conformed copy of the subcontract and its cost. The subcontract shall provide the following:

17.11.1 Payment to **Subcontractors**: The agreement between the **Contractor** and its **Subcontractor** shall contain the same terms and conditions as to method of payment for **Work**, labor, and materials, and as to retained percentages, as are contained in this **Contract**.

17.11.2 Prevailing Rate of Wages: The agreement between the **Contractor** and its **Subcontractor** shall include the prevailing wage rates and supplemental benefits to be paid in accordance with Labor Law Section 220.

17.11.3 Section 6-123 of the Administrative Code: Pursuant to the requirements of Section 6-123 of the Administrative Code, every agreement between the **Contractor** and a **Subcontractor** in excess of fifty thousand ($50,000) dollars shall include a provision that the **Subcontractor** shall not engage in any unlawful discriminatory practice as defined in Title VIII of the Administrative Code (Section 8-101 *et seq*.).

17.11.4 All requirements required pursuant to federal and/or state grant agreement(s), if applicable to the **Work**.

17.12 The **Commissioner** may deduct from the amounts certified under this **Contract** to be due to the **Contractor**, the sum or sums due and owing from the **Contractor** to the **Subcontractors** according to the terms of the said subcontracts, and in case of dispute between the **Contractor** and its **Subcontractor**, or **Subcontractors**, as to the amount due and owing, the **Commissioner** may deduct and withhold from the amounts certified under this **Contract** to be due to the **Contractor** such sum or sums as may be claimed by such **Subcontractor**, or **Subcontractors**, in a sworn affidavit, to be due and owing until such time as such claim or claims shall have been finally resolved.

17.13 On contracts where performance bonds and payment bonds are executed, the **Contractor** shall include on each requisition for payment the following data: **Subcontractor's** name, value of the subcontract, total amount previously paid to **Subcontractor** for **Work** previously requisitioned, and the amount, including retainage, to be paid to the **Subcontractor** for **Work** included in the requisition.

17.14 On **Contracts** where performance bonds and payment bonds are not executed, the **Contractor** shall include with each requisition for payment submitted hereunder, a signed statement from each and every **Subcontractor** and/or **Materialman** for whom payment is requested in such requisition. Such signed statement shall be on the letterhead of the **Subcontractor** and/or **Materialman** for whom payment is requested and shall (i) verify that such **Subcontractor** and/or **Materialman** has been paid in full for all **Work** performed and/or material supplied to date, exclusive of any amount retained and any amount included on the current requisition, and (ii) state the total amount of retainage to date, exclusive of any amount retained on the current requisition.

ARTICLE 18. ASSIGNMENTS

18.1 The **Contractor** shall not assign, transfer, convey or otherwise dispose of this **Contract**, or the right to execute it, or the right, title or interest in or to it or any part thereof, or assign, by power of attorney or otherwise any of the monies due or to become due under this **Contract**, unless the previous written consent of the **Commissioner** shall first be obtained thereto, and the giving of any such consent to a particular assignment shall not dispense with the necessity of such consent to any further or other assignments.

18.2 Such assignment, transfer, conveyance or other disposition of this **Contract** shall not be valid until filed in the office of the **Commissioner** and the **Comptroller**, with the written consent of the **Commissioner** endorsed thereon or attached thereto.

18.3 Failure to obtain the previous written consent of the **Commissioner** to such an assignment, transfer, conveyance or other disposition, may result in the revocation and annulment of this **Contract**. The **City** shall thereupon be relieved and discharged from any further liability to the **Contractor**, its assignees, transferees or sublessees, who shall forfeit and lose all monies therefor earned under the **Contract**, except so much as may be required to pay the **Contractor's** employees.

18.4 The provisions of this clause shall not hinder, prevent, or affect an assignment by the **Contractor** for the benefit of its creditors made pursuant to the **Laws** of the State of New York.

18.5 This **Contract** may be assigned by the **City** to any corporation, agency or instrumentality having authority to accept such assignment.

CHAPTER V: CONTRACTOR'S SECURITY AND GUARANTEE

ARTICLE 19. SECURITY DEPOSIT

19.1 If performance and payment bonds are required, the **City** shall retain the bid security to ensure that the successful bidder executes the **Contract** and furnishes the required payment and performance security within ten (10) **Days** after notice of the award of the **Contract**. If the successful bidder fails to execute the **Contract** and furnish the required payment and performance security, the **City** shall retain such bid security as set forth in the Information for Bidders. If the successful bidder executes the

Contract and furnishes the required payment and performance security, the **City** shall return the bid security within a reasonable time after the furnishing of such bonds and execution of the **Contract** by the **City**.

19.2 If performance and payment bonds are not required, the bid security shall be retained by the **City** as security for the **Contractor**'s faithful performance of the **Contract**. If partial payments are provided, the bid security will be returned to the **Contractor** after the sum retained under Article 21 equals the amount of the bid security, subject to other provisions of this **Contract**. If partial payments are not provided, the bid security will be released when final payment is certified by the **City** for payment.

19.3 If the **Contractor** is declared in default under Article 48 prior to the return of the deposit, or if any claim is made such as referred to in Article 23, the amount of such deposit, or so much thereof as the **Comptroller** may deem necessary, may be retained and then applied by the **Comptroller**:

19.3.1 To compensate the **City** for any expense, loss or damage suffered or incurred by reason of or resulting from such default, including the cost of re-letting and liquidated damages; or

19.3.2 To indemnify the **City** against any and all claims.

ARTICLE 20. PAYMENT GUARANTEE

20.1 On **Contracts** where one hundred (100%) percent performance bonds and payment bonds are executed, this Article 20 does not apply.

20.2 In the event the terms of this **Contract** do not require the **Contractor** to provide a payment bond or where the **Contract** does not require a payment bond for one hundred (100%) percent of the **Contract** price, the **City** shall, in accordance with the terms of this Article 20, guarantee payment of all lawful claims for:

20.2.1 Wages and compensation for labor performed and/or services rendered; and

20.2.2 Materials, equipment, and supplies provided, whether incorporated into the **Work** or not, when demands have been filed with the **City** as provided hereinafter by any person, firm, or corporation which furnished labor, material, equipment, supplies, or any combination thereof, in connection with the **Work** performed hereunder (hereinafter referred to as the "beneficiary") at the direction of the **City** or the **Contractor**.

20.3 The provisions of Article 20.2 are subject to the following limitations and conditions:

20.3.1 If the **Contractor** provides a payment bond for a value that is less than one hundred (100%) percent of the value of the **Contract Work**, the payment bond provided by the **Contractor** shall be primary (and non-contributing) to the payment guarantee provided under this Article 20.

20.3.2 The guarantee is made for the benefit of all beneficiaries as defined in Article 20.2 provided that those beneficiaries strictly adhere to the terms and conditions of Article 20.3.4 and 20.3.5.

20.3.3 Nothing in this Article 20 shall prevent a beneficiary providing labor, services or material for the **Work** from suing the **Contractor** for any amounts due and owing the beneficiary by the **Contractor**.

20.3.4 Every person who has furnished labor or material, to the **Contractor** or to a **Subcontractor** of the **Contractor**, in the prosecution of the **Work** and who has not been paid in full therefor before the expiration of a period of ninety (90) **Days** after the date on which the last of the labor was performed or material was furnished by him/her for which the claim is made, shall have the right to sue on this payment guarantee in his/her own name for the amount, or the balance thereof, unpaid at the time of commencement of the action; provided, however, that a person having a direct contractual relationship with a **Subcontractor** of the **Contractor** but no contractual relationship express or implied with the **Contractor** shall not have a right of action upon the guarantee unless he/she shall have given written notice to the **Contractor** within one hundred twenty (120) **Days** from the date on which the last of the labor was performed or the last of the material was furnished, for which his/her claim is made, stating with substantial accuracy the amount claimed and the name of the party to whom the material was furnished or for whom the labor was performed. The notice shall be served by delivering the same personally to the **Contractor** or by mailing the same by registered mail, postage prepaid, in an envelope addressed to the **Contractor** at any place where it maintains an office or conducts its business; provided, however, that where such notice is actually received by the **Contractor** by other means, such notice shall be deemed sufficient.

20.3.5 Except as provided in Labor Law Section 220-g, no action on this payment guarantee shall be commenced after the expiration of the one-year limitations period set forth in Section 137(4)(b) of the State Finance Law.

20.3.6 The **Contractor** shall promptly forward to the **City** any notice or demand received pursuant to Article 20.3.4. The **Contractor** shall inform the **City** of any defenses to the notice or demand and shall forward to the **City** any documents the **City** requests concerning the notice or demand.

20.3.7 All demands made against the **City** by a beneficiary of this payment guarantee shall be presented to the **Engineer** along with all written documentation concerning the demand which the **Engineer** deems reasonably appropriate or necessary, which may include, but shall not be limited to: the subcontract; any invoices presented to the **Contractor** for payment; the notarized statement of the beneficiary that the demand is due and payable, that a request for payment has been made of the **Contractor** and that the demand has not been paid by the **Contractor** within the time allowed for such payment by the subcontract; and copies of any correspondence between the beneficiary and the **Contractor** concerning such demand. The **City** shall notify the **Contractor** that a demand has been made. The **Contractor** shall inform the **City** of any defenses to the demand and shall forward to the **City** any documents the **City** requests concerning the demand.

20.3.8 The **City** shall make payment only if, after considering all defenses presented by the **Contractor**, it determines that the payment is due and owing to the beneficiary making the demand.

20.3.9 No beneficiary shall be entitled to interest from the **City**, or to any other costs, including, but not limited to, attorneys' fees, except to the extent required by State Finance Law Section 137.

20.4 Upon the receipt by the **City** of a demand pursuant to this Article 20, the **City** may withhold from any payment otherwise due and owing to the **Contractor** under this **Contract** an amount sufficient to satisfy the demand.

20.4.1 In the event the **City** determines that the demand is valid, the **City** shall notify the **Contractor** of such determination and the amount thereof and direct the **Contractor** to immediately pay such amount to the beneficiary. In the event the **Contractor**, within seven (7) **Days** of receipt of such notification from the **City**, fails to pay the beneficiary, such failure shall constitute an automatic and irrevocable assignment of payment by the **Contractor** to the beneficiary for the amount of the demand determined by the **City** to be valid. The **Contractor**, without further notification or other process, hereby gives its unconditional consent to such assignment of payment to the beneficiary and authorizes the **City**, on its behalf, to take all necessary actions to implement such assignment of payment, including without limitation the execution of any instrument or documentation necessary to effectuate such assignment.

20.4.2 In the event that the amount otherwise due and owing to the **Contractor** by the **City** is insufficient to satisfy such demand, the **City** may, at its option, require payment from the **Contractor** of an amount sufficient to cover such demand and exercise any other right to require or recover payment which the **City** may have under **Law** or **Contract**.

20.4.3 In the event the **City** determines that the demand is invalid, any amount withheld pending the **City**'s review of such demand shall be paid to the **Contractor**; provided, however, no lien has been filed. In the event a claim or an action has been filed, the terms and conditions set forth in Article 23 shall apply. In the event a lien has been filed, the parties will be governed by the provisions of the Lien Law of the State of New York.

20.5 The provisions of this Article 20 shall not prevent the **City** and the **Contractor** from resolving disputes in accordance with the **PPB** Rules, where applicable.

20.6 In the event the **City** determines that the beneficiary is entitled to payment pursuant to this Article 20, such determination and any defenses and counterclaims raised by the **Contractor** shall be taken into account in evaluating the **Contractor's** performance.

20.7 Nothing in this Article 20 shall relieve the **Contractor** of the obligation to pay the claims of all persons with valid and lawful claims against the **Contractor** relating to the **Work**.

20.8 The **Contractor** shall not require any performance, payment or other bonds of any **Subcontractor** if this **Contract** does not require such bonds of the **Contractor**.

20.9 The payment guarantee made pursuant to this Article 20 shall be construed in a manner consistent with Section 137 of the State Finance Law and shall afford to persons furnishing labor or materials to the **Contractor** or its **Subcontractors** in the prosecution of the **Work** under this **Contract** all of the rights and remedies afforded to such persons by such section, including but not limited to, the right to commence an action against the **City** on the payment guarantee provided by this Article 20 within the one-year limitations period set forth in Section 137(4)(b).

ARTICLE 21. RETAINED PERCENTAGE

21.1 If this **Contract** requires one hundred (100%) percent performance and payment security, then as further security for the faithful performance of this **Contract**, the **Commissioner** shall deduct, and

retain until the substantial completion of the **Work**, five (5%) percent of the value of **Work** certified for payment in each partial payment voucher.

21.2 If this **Contract** does not require one hundred (100%) percent performance and payment security and if the price for which this **Contract** was awarded does not exceed one million ($1,000,000) dollars, then as further security for the faithful performance of this **Contract**, the **Commissioner** shall deduct, and retain until the substantial completion of the **Work**, five (5%) percent of the value of **Work** certified for payment in each partial payment voucher.

21.3 If this **Contract** does not require one hundred (100%) percent performance and payment security and if the price for which this **Contract** was awarded exceeds one million ($1,000,000) dollars, then as further security for the faithful performance of this **Contract,** the **Commissioner** shall deduct, and retain until the substantial completion of the **Work**, up to ten (10%) percent of the value of **Work** certified for payment in each partial payment voucher. The percentage to be retained is set forth in Schedule A of the General Conditions.

ARTICLE 22. INSURANCE

22.1 Types of Insurance: The **Contractor** shall procure and maintain the following types of insurance if, and as indicated, in Schedule A of the General Conditions (with the minimum limits and special conditions specified in Schedule A). Such insurance shall be maintained from the date the **Contractor** is required to provide Proof of Insurance pursuant to Article 22.3.1 through the date of completion of all required **Work** (including punch list work as certified in writing by the **Resident Engineer**), except for insurance required pursuant to Article 22.1.4, which may terminate upon **Substantial Completion** of the **Contract**. All insurance shall meet the requirements set forth in this Article 22. Wherever this Article requires that insurance coverage be "at least as broad" as a specified form (including all ISO forms), there is no obligation that the form itself be used, provided that the **Contractor** can demonstrate that the alternative form or endorsement contained in its policy provides coverage at least as broad as the specified form.

22.1.1 Commercial General Liability Insurance: The **Contractor** shall provide Commercial General Liability Insurance covering claims for property damage and/or bodily injury, including death, which may arise from any of the operations under this **Contract**. Coverage under this insurance shall be at least as broad as that provided by the latest edition of Insurance Services Office ("ISO") Form CG 0001. Such insurance shall be "occurrence" based rather than "claims-made" and include, without limitation, the following types of coverage: premises operations; products and completed operations; contractual liability (including the tort liability of another assumed in a contract); broad form property damage; independent contractors; explosion, collapse and underground (XCU); construction means and methods; and incidental malpractice. Such insurance shall contain a "per project" aggregate limit, as specified in Schedule A, that applies separately to operations under this **Contract**.

22.1.1(a) Such Commercial General Liability Insurance shall name the **City** as an Additional Insured. Coverage for the City shall specifically include the **City's** officials and employees, be at least as broad as the latest edition of ISO Form CG 20 10 and provide completed operations coverage at least as broad as the latest edition of ISO Form CG 20 37.

22.1.1(b) Such Commercial General Liability Insurance shall name all other entities designated as additional insureds in Schedule A but only for claims arising from the

Contractor's operations under this **Contract**, with coverage at least as broad as the latest edition of ISO Form CG 20 26.

22.1.1(c) If the **Work** requires a permit from the Department of Buildings pursuant to 1 RCNY Section 101-08, the **Contractor** shall provide Commercial General Liability Insurance with limits of at least those required by 1 RCNY section 101-08 or greater limits required by the Agency in accordance with Schedule A. If the **Work** does not require such a permit, the minimum limits shall be those provided for in Schedule A.

22.1.1(d) If any of the **Work** includes repair of a waterborne vessel owned by or to be delivered to the **City**, such Commercial General Liability shall include, or be endorsed to include, Ship Repairer's Legal Liability Coverage to protect against, without limitation, liability arising from navigation of such vessels prior to delivery to and acceptance by the **City**.

22.1.2 Workers' Compensation Insurance, Employers' Liability Insurance, and Disability Benefits Insurance: The **Contractor** shall provide, and shall cause its **Subcontractors** to provide, Workers Compensation Insurance, Employers' Liability Insurance, and Disability Benefits Insurance in accordance with the **Laws** of the State of New York on behalf of all employees providing services under this **Contract** (except for those employees, if any, for which the **Laws** require insurance only pursuant to Article 22.1.3).

22.1.3 United States Longshoremen's and Harbor Workers Act and/or Jones Act Insurance: If specified in Schedule A of the General Conditions or if required by **Law**, the **Contractor** shall provide insurance in accordance with the United States Longshoremen's and Harbor Workers Act and/or the Jones Act, on behalf of all qualifying employees providing services under this **Contract**.

22.1.4 Builders Risk Insurance: If specified in Schedule A of the General Conditions, the **Contractor** shall provide Builders Risk Insurance on a completed value form for the total value of the **Work** through **Substantial Completion** of the **Work** in its entirety. Such insurance shall be provided on an All Risk basis and include coverage, without limitation, for windstorm (including named windstorm), storm surge, flood and earth movement. Unless waived by the **Commissioner**, it shall include coverage for ordinance and law, demolition and increased costs of construction, debris removal, pollutant clean up and removal, and expediting costs. Such insurance shall cover, without limitation, (a) all buildings and/or structures involved in the **Work**, as well as temporary structures at the **Site**, and (b) any property that is intended to become a permanent part of such building or structure, whether such property is on the **Site**, in transit or in temporary storage. Policies shall name the **Contractor** as Named Insured and list the **City** as both an Additional Insured and a Loss Payee as its interest may appear.

22.1.4(a) Policies of such insurance shall specify that, in the event a loss occurs at an occupied facility, occupancy of such facility is permitted without the consent of the issuing insurance company.

22.1.4(b) Such insurance may be provided through an Installation Floater, at the **Contractor's** option, if it otherwise conforms with the requirements of this Article 22.1.4.

22.1.5 Commercial Automobile Liability Insurance: The **Contractor** shall provide Commercial Automobile Liability Insurance for liability arising out of ownership,

maintenance or use of any owned (if any), non-owned and hired vehicles to be used in connection with this **Contract**. Coverage shall be at least as broad as the latest edition of ISO Form CA0001. If vehicles are used for transporting hazardous materials, the Automobile Liability Insurance shall be endorsed to provide pollution liability broadened coverage for covered vehicles (endorsement CA 99 48) as well as proof of MCS 90.

22.1.6 Contractors Pollution Liability Insurance: If specified in Schedule A of the General Conditions, the **Contractor** shall maintain, or cause the **Subcontractor** doing such **Work** to maintain, Contractors Pollution Liability Insurance covering bodily injury and property damage. Such insurance shall provide coverage for actual, alleged or threatened emission, discharge, dispersal, seepage, release or escape of pollutants (including asbestos), including any loss, cost or expense incurred as a result of any cleanup of pollutants (including asbestos) or in the investigation, settlement or defense of any claim, action, or proceedings arising from the operations under this **Contract**. Such insurance shall be in the **Contractor's** name and list the **City** as an Additional Insured and any other entity specified in Schedule A. Coverage shall include, without limitation, (a) loss of use of damaged property or of property that has not been physically injured, (b) transportation, and (c) non-owned disposal sites.

22.1.6(a) Coverage for the **City** as Additional Insured shall specifically include the **City's** officials and employees and be at least as broad as provided to the **Contractor** for this **Project**.

22.1.6(b) If such insurance is written on a claims-made policy, such policy shall have a retroactive date on or before the effective date of this **Contract**, and continuous coverage shall be maintained, or an extended discovery period exercised, for a period of not less than three (3) years from the time the **Work** under this **Contract** is completed.

22.1.7 Marine Insurance:

22.1.7(a) Marine Protection and Indemnity Insurance: If specified in Schedule A of the General Conditions or if the **Contractor** engages in marine operations in the execution of any part of the **Work**, the **Contractor** shall maintain, or cause the **Subcontractor** doing such Work to maintain, Marine Protection and Indemnity Insurance with coverage at least as broad as Form SP-23. The insurance shall provide coverage for the **Contractor** or **Subcontractor** (whichever is doing this **Work**) and for the **City** (together with its officials and employees) and any other entity specified in Schedule A as an Additional Insured for bodily injury and property damage arising from marine operations under this **Contract**. Coverage shall include, without limitation, injury or death of crew members (if not fully provided through other insurance), removal of wreck, damage to piers, wharves and other fixed or floating objects and loss of or damage to any other vessel or craft, or to property on such other vessel or craft.

22.1.7(b) Hull and Machinery Insurance: If specified in Schedule A of the General Conditions or if the **Contractor** engages in marine operations in the execution of any part of the **Work**, the **Contractor** shall maintain, or cause the **Subcontractor** doing such **Work** to maintain, Hull and Machinery Insurance with coverage for the **Contractor** or **Subcontractor** (whichever is doing this Work) and for the **City** (together with its officials and employees) as Additional Insured at least as broad as the latest edition of American Institute Tug Form for all tugs used under this

Contract and Collision Liability at least as broad as the latest edition of American Institute Hull Clauses.

22.1.7(c) Marine Pollution Liability Insurance: If specified in Schedule A of the General Conditions or if the **Contractor** engages in marine operations in the execution of any part of the **Work**, the **Contractor** shall maintain, or cause the **Subcontractor** doing such Work to maintain, Marine Pollution Liability Insurance covering itself (or the Subcontractor doing such Work) as Named Insured and the **City** (together with its officials and employees) and any other entity specified in Schedule A as an Additional Insured. Coverage shall be at least as broad as that provided by the latest edition of Water Quality Insurance Syndicate Form and include, without limitation, liability arising from the discharge or substantial threat of a discharge of oil, or from the release or threatened release of a hazardous substance including injury to, or economic losses resulting from, the destruction of or damage to real property, personal property or natural resources.

22.1.8 The **Contractor** shall provide such other types of insurance, at such minimum limits and with such conditions, as are specified in Schedule A of the General Conditions.

22.2 General Requirements for Insurance Coverage and Policies:

22.2.1 All required insurance policies shall be maintained with companies that may lawfully issue the required policy and have an A.M. Best rating of at least A-/VII or a Standard and Poor's rating of at least A, unless prior written approval is obtained from the **City** Corporation Counsel.

22.2.2 The **Contractor** shall be solely responsible for the payment of all premiums for all required policies and all deductibles and self-insured retentions to which such policies are subject, whether or not the **City** is an insured under the policy.

22.2.3 In his/her sole discretion, the **Commissioner** may, subject to the approval of the **Comptroller** and the **City** Corporation Counsel, accept Letters of Credit and/or custodial accounts in lieu of required insurance.

22.2.4 The **City's** limits of coverage for all types of insurance required pursuant to Schedule A of the General Conditions shall be the greater of (i) the minimum limits set forth in Schedule A or (ii) the limits provided to the **Contractor** as Named Insured under all primary, excess, and umbrella policies of that type of coverage.

22.2.5 The **Contractor** may satisfy its insurance obligations under this Article 22 through primary policies or a combination of primary and excess/umbrella policies, so long as all policies provide the scope of coverage required herein.

22.2.6 Policies of insurance provided pursuant to this Article 22 shall be primary and non-contributing to any insurance or self-insurance maintained by the **City**.

22.3 Proof of Insurance:

22.3.1 For all types of insurance required by Article 22.1 and Schedule A, except for insurance required by Articles 22.1.4 and 22.1.7, the **Contractor** shall file proof of insurance in accordance with this Article 22.3 within ten (10) **Days** of award. For insurance

provided pursuant to Articles 22.1.4 and 22.1.7, proof shall be filed by a date specified by the **Commissioner** or ten (10) **Days** prior to the commencement of the portion of the **Work** covered by such policy, whichever is earlier.

22.3.2 For Workers' Compensation Insurance provided pursuant to Article 22.1.2, the **Contractor** shall submit one of the following forms: C-105.2 Certificate of Workers' Compensation Insurance; U-26.3 - State Insurance Fund Certificate of Workers' Compensation Insurance; Request for WC/DB Exemption (Form CE-200); equivalent or successor forms used by the New York State Workers' Compensation Board; or other proof of insurance in a form acceptable to the **Commissioner**. For Disability Benefits Insurance provided pursuant to Article 22.1.2, the Contractor shall submit DB-120.1 - Certificate Of Insurance Coverage Under The NYS Disability Benefits Law, Request for WC/DB Exemption (Form CE-200); equivalent or successor forms used by the New York State Workers' Compensation Board; or other proof of insurance in a form acceptable to the **Commissioner**. ACORD forms are not acceptable.

22.3.3 For policies provided pursuant to all of Article 22.1 other than Article 22.1.2, the **Contractor** shall submit one or more Certificates of Insurance on forms acceptable to the **Commissioner**. All such Certificates of Insurance shall certify (a) the issuance and effectiveness of such policies of insurance, each with the specified minimum limits (b) for insurance secured pursuant to Article 22.1.1 that the **City** and any other entity specified in Schedule A is an Additional Insured thereunder; (c) in the event insurance is required pursuant to Article 22.1.6 and/or Article 22.1.7, that the City is an Additional Insured thereunder; (d) the company code issued to the insurance company by the National Association of Insurance Commissioners (the NAIC number); and (e) the number assigned to the **Contract** by the **City**. All such Certificates of Insurance shall be accompanied by either a duly executed "Certification by Insurance Broker or Agent" in the form contained in Part III of Schedule A or copies of all policies referenced in such Certificate of Insurance as certified by an authorized representative of the issuing insurance carrier. If any policy is not available at the time of submission, certified binders may be submitted until such time as the policy is available, at which time a certified copy of the policy shall be submitted.

22.3.4 Documentation confirming renewals of insurance shall be submitted to the **Commissione**r prior to the expiration date of coverage of policies required under this **Contract**. Such proofs of insurance shall comply with the requirements of Articles 22.3.2 and 22.3.3.

22.3.5 The **Contractor** shall be obligated to provide the **City** with a copy of any policy of insurance provided pursuant to this Article 22 upon the demand for such policy by the **Commissioner** or the **City** Corporation Counsel.

22.4 Operations of the **Contractor**:

22.4.1 The **Contractor** shall not commence the **Work** unless and until all required certificates have been submitted to and accepted by the **Commissioner**. Acceptance by the **Commissioner** of a certificate does not excuse the **Contractor** from securing insurance consistent with all provisions of this Article 22 or of any liability arising from its failure to do so.

22.4.2 The **Contractor** shall be responsible for providing continuous insurance coverage in the manner, form, and limits required by this **Contract** and shall be authorized to perform **Work** only during the effective period of all required coverage.

22.4.3 In the event that any of the required insurance policies lapse, are revoked, suspended or otherwise terminated, for whatever cause, the **Contractor** shall immediately stop all **Work**, and shall not recommence **Work** until authorized in writing to do so by the **Commissioner**. Upon quitting the **Site**, except as otherwise directed by the **Commissioner**, the **Contractor** shall leave all plant, materials, equipment, tools, and supplies on the **Site**. **Contract** time shall continue to run during such periods and no extensions of time will be granted. The **Commissioner** may also declare the **Contractor** in default for failure to maintain required insurance.

22.4.4 In the event the **Contractor** receives notice, from an insurance company or other person, that any insurance policy required under this Article 22 shall be cancelled or terminated (or has been cancelled or terminated) for any reason, the **Contractor** shall immediately forward a copy of such notice to both the **Commissioner** and the New York City Comptroller, attn: Office of Contract Administration, Municipal Building, One Centre Street, room 1005, New York, New York 10007. Notwithstanding the foregoing, the **Contractor** shall ensure that there is no interruption in any of the insurance coverage required under this Article 22.

22.4.5 Where notice of loss, damage, occurrence, accident, claim or suit is required under an insurance policy maintained in accordance with this Article 22, the **Contractor** shall notify in writing all insurance carriers that issued potentially responsive policies of any such event relating to any operations under this **Contract** (including notice to Commercial General Liability insurance carriers for events relating to the **Contractor**'s own employees) no later than 20 days after such event. For any policy where the **City** is an Additional Insured, such notice shall expressly specify that "this notice is being given on behalf of the City of New York as Insured as well as the Named Insured." Such notice shall also contain the following information: the number of the insurance policy, the name of the named insured, the date and location of the damage, occurrence, or accident, and the identity of the persons or things injured, damaged or lost. The **Contractor** shall simultaneously send a copy of such notice to the City of New York c/o Insurance Claims Specialist, Affirmative Litigation Division, New York City Law Department, 100 Church Street, New York, New York 10007.

22.4.6 In the event of any loss, accident, claim, action, or other event that does or can give rise to a claim under any insurance policy required under this Article 22, the **Contractor** shall at all times fully cooperate with the **City** with regard to such potential or actual claim.

22.5 **Subcontractor** Insurance: In the event the **Contractor** requires any **Subcontractor** to procure insurance with regard to any operations under this **Contract** and requires such **Subcontractor** to name the **Contractor** as an **Additional Insured** thereunder, the **Contractor** shall ensure that the **Subcontractor** name the **City**, including its officials and employees, as an Additional Insured with coverage at least as broad as the most recent edition of ISO Form CG 20 26.

22.6 Wherever reference is made in Article 7 or this Article 22 to documents to be sent to the **Commissioner** (e.g., notices, filings, or submissions), such documents shall be sent to the address set forth in Schedule A of the General Conditions. In the event no address is set forth in Schedule A, such documents are to be sent to the **Commissioner's** address as provided elsewhere in this **Contract**.

22.7 Apart from damages or losses covered by insurance provided pursuant to Articles 22.1.2, 22.1.3, or 22.1.5, the **Contractor** waives all rights against the **City**, including its officials and employees, for any damages or losses that are covered under any insurance required under this Article 22 (whether or

not such insurance is actually procured or claims are paid thereunder) or any other insurance applicable to the operations of the **Contractor** and/or its employees, agents, or **Subcontractors**.

22.8 In the event the **Contractor** utilizes a self-insurance program to satisfy any of the requirements of this Article 22, the **Contractor** shall ensure that any such self-insurance program provides the **City** with all rights that would be provided by traditional insurance under this Article 22, including but not limited to the defense and indemnification obligations that insurers are required to undertake in liability policies.

22.9 Materiality/Non-Waiver: The **Contractor's** failure to secure policies in complete conformity with this Article 22, or to give an insurance company timely notice of any sort required in this **Contract** or to do anything else required by this Article 22 shall constitute a material breach of this **Contract**. Such breach shall not be waived or otherwise excused by any action or inaction by the **City** at any time.

22.10 Pursuant to General Municipal Law Section 108, this **Contract** shall be void and of no effect unless **Contractor** maintains Workers' Compensation Insurance for the term of this **Contract** to the extent required and in compliance with the New York State Workers' Compensation Law.

22.11 Other Remedies: Insurance coverage provided pursuant to this Article 22 or otherwise shall not relieve the **Contractor** of any liability under this **Contract**, nor shall it preclude the **City** from exercising any rights or taking such other actions available to it under any other provisions of this **Contract** or **Law**.

ARTICLE 23. MONEY RETAINED AGAINST CLAIMS

23.1 If any claim shall be made by any person or entity (including **Other Contractors** with the **City** on this **Project**) against the **City** or against the **Contractor** and the **City** for any of the following:

(a) An alleged loss, damage, injury, theft or vandalism of any of the kinds referred to in Articles 7 and 12, plus the reasonable costs of defending the **City**, which in the opinion of the **Comptroller** may not be paid by an insurance company (for any reason whatsoever); or

(b) An infringement of copyrights, patents or use of patented articles, tools, etc., as referred to in Article 57; or

(c) Damage claimed to have been caused directly or indirectly by the failure of the **Contractor** to perform the **Work** in strict accordance with this **Contract,**

the amount of such claim, or so much thereof as the **Comptroller** may deem necessary, may be withheld by the **Comptroller**, as security against such claim, from any money due hereunder. The **Comptroller**, in his/her discretion, may permit the **Contractor** to substitute other satisfactory security in lieu of the monies so withheld.

23.2 If an action on such claim is timely commenced and the liability of the **City**, or the **Contractor**, or both, shall have been established therein by a final judgment of a court of competent jurisdiction, or if such claim shall have been admitted by the **Contractor** to be valid, the **Comptroller** shall pay such judgment or admitted claim out of the monies retained by the **Comptroller** under the provisions of this Article 23, and return the balance, if any, without interest, to the **Contractor**.

ARTICLE 24. MAINTENANCE AND GUARANTY

24.1 The **Contractor** shall promptly repair, replace, restore or rebuild, as the **Commissioner** may determine, any finished **Work** in which defects of materials or workmanship may appear or to which damage may occur because of such defects, during the one (1) year period subsequent to the date of **Substantial Completion** (or use and occupancy in accordance with Article 16), except where other periods of maintenance and guaranty are provided for in Schedule A.

24.2 As security for the faithful performance of its obligations hereunder, the **Contractor**, upon filing its requisition for payment on **Substantial Completion**, shall deposit with the **Commissioner** a sum equal to one (1%) percent of the price (or the amount fixed in Schedule A of the General Conditions) in cash or certified check upon a state or national bank and trust company or a check of such bank and trust company signed by a duly authorized officer thereof and drawn to the order of the **Comptroller**, or obligations of the **City**, which the **Comptroller** may approve as of equal value with the sum so required.

24.3 In lieu of the above, the **Contractor** may make such security payment to the **City** by authorizing the **Commissioner** in writing to deduct the amount from the **Substantial Completion** payment which shall be deemed the deposit required above.

24.4 If the **Contractor** has faithfully performed all of its obligations hereunder the **Commissioner** shall so certify to the **Comptroller** within five (5) **Days** after the expiration of one (1) year from the date of **Substantial Completion** and acceptance of the **Work** or within thirty (30) **Days** after the expiration of the guarantee period fixed in the **Specifications**. The security payment shall be repaid to the **Contractor** without interest within thirty (30) **Days** after certification by the **Commissioner** to the **Comptroller** that the **Contractor** has faithfully performed all of its obligations hereunder.

24.5 Notice by the **Commissioner** to the **Contractor** to repair, replace, rebuild or restore such defective or damaged **Work** shall be timely, pursuant to this article, if given not later than ten (10) **Days** subsequent to the expiration of the one (1) year period or other periods provided for herein.

24.6 If the **Contractor** shall fail to repair, replace, rebuild or restore such defective or damaged **Work** promptly after receiving such notice, the **Commissioner** shall have the right to have the **Work** done by others in the same manner as provided for in the completion of a defaulted **Contract**, under Article 51.

24.7 If the security payment so deposited is insufficient to cover the cost of such **Work**, the **Contractor** shall be liable to pay such deficiency on demand by the **Commissioner**.

24.8 The **Engineer's** certificate setting forth the fair and reasonable cost of repairing, replacing, rebuilding or restoring any damaged or defective **Work** when performed by one other than the **Contractor**, shall be binding and conclusive upon the **Contractor** as to the amount thereof.

24.9 The **Contractor** shall obtain all manufacturers' warranties and guaranties of all equipment and materials required by this **Contract** in the name of the **City** and shall deliver same to the **Commissioner**. All of the **City's** rights and title and interest in and to said manufacturers' warranties and guaranties may be assigned by the **City** to any subsequent purchasers of such equipment and materials or lessees of the premises into which the equipment and materials have been installed.

CHAPTER VI: CHANGES, EXTRA WORK, AND DOCUMENTATION OF CLAIM

ARTICLE 25. CHANGES

25.1 Changes may be made to this **Contract** only as duly authorized in writing by the **Commissioner** in accordance with the **Law** and this **Contract**. All such changes, modifications, and amendments will become a part of the **Contract**. **Work** so ordered shall be performed by the **Contractor**.

25.2 **Contract** changes will be made only for **Work** necessary to complete the **Work** included in the original scope of the **Contract** and/or for non-material changes to the scope of the **Contract**. Changes are not permitted for any material alteration in the scope of **Work** in the **Contract**.

25.3 The **Contractor** shall be entitled to a price adjustment for **Extra Work** performed pursuant to a written change order. Adjustments to price shall be computed in one or more of the following ways:

25.3.1 By applicable unit prices specified in the **Contract**; and/or

25.3.2 By agreement of a fixed price; and/or

25.3.3 By time and material records; and/or

25.3.4 In any other manner approved by the **CCPO**.

25.4 All payments for change orders are subject to pre-audit by the **Engineering Audit Officer** and may be post-audited by the **Comptroller** and/or the **Agency**.

ARTICLE 26. METHODS OF PAYMENT FOR OVERRUNS AND EXTRA WORK

26.1 Overrun of Unit Price Item: An overrun is any quantity of a unit price item which the **Contractor** is directed to provide which is in excess of one hundred twenty-five (125%) percent of the estimated quantity for that item set forth in the bid schedule.

26.1.1 For any unit price item, the **Contractor** will be paid at the unit price bid for any quantity up to one hundred twenty-five (125%) percent of the estimated quantity for that item set forth in the bid schedule. If during the progress of the **Work**, the actual quantity of any unit price item required to complete the **Work** approaches the estimated quantity for that item, and for any reason it appears that the actual quantity of any unit price item necessary to complete the **Work** will exceed the estimated quantity for that item by twenty-five (25%) percent, the **Contractor** shall immediately notify the **Engineer** of such anticipated overrun. The **Contractor** shall not be compensated for any quantity of a unit price item provided which is in excess of one hundred twenty-five (125%) percent of the estimated quantity for that item set forth in the bid schedule without written authorization from the **Engineer**.

26.1.2 If the actual quantity of any unit price item necessary to complete the **Work** will exceed one hundred twenty five (125%) percent of the estimated quantity for that item set forth in the bid schedule, the **City** reserves the right and the **Contractor** agrees to negotiate a new unit price for such item. In no event shall such negotiated new unit price exceed the unit bid price. If the **City** and **Contractor** cannot agree on a new unit price, then the **City** shall order the **Contractor** and the **Contractor** agrees to provide additional quantities of

the item on the basis of time and material records for the actual and reasonable cost as determined under Article 26.2, but in no event at a unit price exceeding the unit price bid.

26.2 **Extra Work:** For **Extra Work** where payment is by agreement on a fixed price in accordance with Article 25.3.2, the price to be paid for such **Extra Work** shall be based on the fair and reasonable estimated cost of the items set forth below. For **Extra Work** where payment is based on time and material records in accordance with Article 25.3.3, the price to be paid for such **Extra Work** shall be the actual and reasonable cost of the items set forth below, calculated in accordance with the formula specified therein, if any.

26.2.1 Necessary materials (including transportation to the **Site**); plus

26.2.2 Necessary direct labor, including payroll taxes (subject to statutory wage caps) and supplemental benefits; plus

26.2.3 Sales and personal property taxes, if any, required to be paid on materials not incorporated into such **Extra Work**; plus

26.2.4 Reasonable rental value of **Contractor-**owned (or **Subcontractor**-owned, as applicable), necessary plant and equipment other than **Small Tools**, plus fuel/energy costs. Except for fuel costs for pick-up trucks which shall be reimbursed based on a consumption of five (5) gallons per shift, fuel costs shall be reimbursed based on actual costs or, in the absence of auditable documentation, the following fuel consumption formula per operating hour: (.035) x (HP rating) x (Fuel cost/gallon). Reasonable rental value is defined as the lower of either seventy-five percent of the monthly prorated rental rates established in "The AED Green Book, Rental Rates and Specifications for Construction Equipment" published by Equipment Watch (the "Green Book"), or seventy-five percent of the monthly prorated rental rates established in the "Rental Rate Blue Book for Construction Equipment" published by Equipment Watch (the "Blue Book") (the applicable Blue Book rate being for rental only without the addition of any operational costs listed in the Blue Book). The reasonable rental value is deemed to be inclusive of all operating costs except for fuel/energy consumption and equipment operator's wages/costs. For multiple shift utilization, reimbursement shall be calculated as follows: first shift shall be seventy-five (75%) percent of such rental rates; second shift shall be sixty (60%) percent of the first shift rate; and third shift shall be forty (40%) percent of the first shift rate. Equipment on standby shall be reimbursed at one-third (1/3) the prorated monthly rental rate. **Contractor**-owned (or **Subcontractor**-owned, as applicable) equipment includes equipment from rental companies affiliated with or controlled by the **Contractor** (or **Subcontractor**, as applicable)**,** as determined by the **Commissioner**. In establishing cost reimbursement for non-operating **Contractor**-owned (or **Subcontractor**-owned, as applicable) equipment (scaffolding, sheeting systems, road plates, etc.), the **City** may restrict reimbursement to a purchase-salvage/life cycle basis if less than the computed rental costs; plus

26.2.5 Necessary installation and dismantling of such plant and equipment, including transportation to and from the **Site**, if any, provided that, in the case of non-**Contractor**-owned (or non-**Subcontractor**-owned, as applicable) equipment rented from a third party, the cost of installation and dismantling are not allowable if such costs are included in the rental rate; plus

26.2.6 Necessary fees charged by governmental entities; plus

26.2.7 Necessary construction-related service fees charged by non-governmental entities, such as landfill tipping fees; plus

26.2.8 Reasonable rental costs of non-**Contractor**-owned (or non-**Subcontractor**-owned, as applicable) necessary plant and equipment other than **Small Tools**, plus fuel/energy costs. Except for fuel costs for pick-up trucks which shall be reimbursed based on a consumption of five (5) gallons per shift, fuel costs shall be reimbursed based on actual costs or, in the absence of auditable documentation, the following fuel consumption formula per hour of operation: (.035) x (HP rating) x (Fuel cost/gallon). In lieu of renting, the **City** reserves the right to direct the purchase of non-operating equipment (scaffolding, sheeting systems, road plates, etc.), with payment on a purchase-salvage/life cycle basis, if less than the projected rental costs; plus

26.2.9 Workers' Compensation Insurance, and any insurance coverage expressly required by the **City** for the performance of the **Extra Work** which is different than the types of insurance required by Article 22 and Schedule A of the General Conditions. The cost of Workers' Compensation Insurance is subject to applicable payroll limitation caps and shall be based upon the carrier's Manual Rate for such insurance derived from the applicable class Loss Cost ("LC") and carrier's Lost Cost Multiplier ("LCM") approved by the New York State Department of Financial Services, and with the exception of experience rating, rate modifiers as promulgated by the New York Compensation Insurance Rating Board ("NYCIRB"); plus

26.2.10 Additional costs incurred as a result of the **Extra Work** for performance and payment bonds; plus

26.2.11 Twelve percent (12%) percent of the total of items in Articles 26.2.1 through 26.2.5 as compensation for overhead, except that no percentage for overhead will be allowed on **Payroll Taxes** or on the premium portion of overtime pay or on sales and personal property taxes. Overhead shall include without limitation, all costs and expenses in connection with administration, management superintendence, small tools, and insurance required by Schedule A of the General Conditions other than Workers' Compensation Insurance; plus

26.2.12 Ten (10%) percent of the total of items in Articles 26.2.1 through 26.2.5, plus the items in Article 26.2.11, as compensation for profit, except that no percentage for profit will be allowed on **Payroll Taxes** or on the premium portion of overtime pay or on sales and personal property taxes; plus

26.2.13 Five (5%) percent of the total of items in Articles 26.2.6 through 26.2.10 as compensation for overhead and profit.

26.3 Where the **Extra Work** is performed in whole or in part by other than the **Contractor's** own forces pursuant to Article 26.2, the **Contractor** shall be paid, subject to pre-audit by the **Engineering Audit Officer**, the cost of such **Work** computed in accordance with Article 26.2 above, plus an additional allowance of five (5%) percent to cover the **Contractor's** overhead and profit.

26.4 Where a change is ordered, involving both **Extra Work** and omitted or reduced **Contract Work,** the **Contract** price shall be adjusted, subject to pre-audit by the **EAO**, in an amount based on the difference between the cost of such **Extra Work** and of the omitted or reduced **Work**.

26.5 Where the **Contractor** and the **Commissioner** can agree upon a fixed price for **Extra Work** in accordance with Article 25.3.2 or another method of payment for **Extra Work** in accordance with

Article 25.3.4, or for **Extra Work** ordered in connection with omitted **Work**, such method, subject to pre-audit by the **EAO**, may, at the option of the **Commissioner**, be substituted for the cost plus a percentage method provided in Article 26.2; provided, however, that if the **Extra Work** is performed by a **Subcontractor**, the **Contractor** shall not be entitled to receive more than an additional allowance of five (5%) percent for overhead and profit over the cost of such **Subcontractor's Work** as computed in accordance with Article 26.2.

ARTICLE 27. RESOLUTION OF DISPUTES

27.1 All disputes between the **City** and the **Contractor** of the kind delineated in this Article 27.1 that arise under, or by virtue of, this **Contract** shall be finally resolved in accordance with the provisions of this Article 27 and the **PPB** Rules. This procedure for resolving all disputes of the kind delineated herein shall be the exclusive means of resolving any such disputes.

27.1.1 This Article 27 shall not apply to disputes concerning matters dealt with in other sections of the **PPB** Rules, or to disputes involving patents, copyrights, trademarks, or trade secrets (as interpreted by the courts of New York State) relating to proprietary rights in computer software.

27.1.2 This Article 27 shall apply only to disputes about the scope of **Work** delineated by the **Contract**, the interpretation of **Contract** documents, the amount to be paid for **Extra Work** or disputed work performed in connection with the **Contract**, the conformity of the **Contractor's Work** to the **Contract**, and the acceptability and quality of the **Contractor's Work**; such disputes arise when the **Engineer**, **Resident Engineer**, **Engineering Audit Officer**, or other designee of the **Commissioner** makes a determination with which the **Contractor** disagrees.

27.2 All determinations required by this Article 27 shall be made in writing clearly stated, with a reasoned explanation for the determination based on the information and evidence presented to the party making the determination. Failure to make such determination within the time required by this Article 27 shall be deemed a non-determination without prejudice that will allow application to the next level.

27.3 During such time as any dispute is being presented, heard, and considered pursuant to this Article 27, the **Contract** terms shall remain in force and the **Contractor** shall continue to perform **Work** as directed by the **ACCO** or the **Engineer**. Failure of the **Contractor** to continue **Work** as directed shall constitute a waiver by the **Contractor** of its claim.

27.4 Presentation of Disputes to **Commissioner**.

Notice of Dispute and Agency Response. The **Contractor** shall present its dispute in writing ("Notice of Dispute") to the **Commissioner** within thirty (30) Days of receiving written notice of the determination or action that is the subject of the dispute. This notice requirement shall not be read to replace any other notice requirements contained in the **Contract**. The Notice of Dispute shall include all the facts, evidence, documents, or other basis upon which the **Contractor** relies in support of its position, as well as a detailed computation demonstrating how any amount of money claimed by the **Contractor** in the dispute was arrived at. Within thirty (30) Days after receipt of the detailed written submission comprising the complete Notice of Dispute, the **Engineer**, **Resident Engineer**, **Engineering Audit Officer**, or other designee of the **Commissioner** shall submit to the **Commissioner** all materials he or she deems pertinent to the dispute. Following initial submissions to the **Commissioner**, either party may demand of the other the production of any document or other material the demanding party believes may be relevant to the dispute. The requested party shall produce all relevant materials that are not otherwise

protected by a legal privilege recognized by the courts of New York State. Any question of relevancy shall be determined by the **Commissioner** whose decision shall be final. Willful failure of the **Contractor** to produce any requested material whose relevancy the **Contractor** has not disputed, or whose relevancy has been affirmatively determined, shall constitute a waiver by the **Contractor** of its claim.

27.4.1 **Commissioner** Inquiry. The **Commissioner** shall examine the material and may, in his or her discretion, convene an informal conference with the **Contractor**, the **ACCO**, and the **Engineer**, **Resident Engineer**, **Engineering Audit Officer**, or other designee of the **Commissioner** to resolve the issue by mutual consent prior to reaching a determination. The **Commissioner** may seek such technical or other expertise as he or she shall deem appropriate, including the use of neutral mediators, and require any such additional material from either or both parties as he or she deems fit. The **Commissioner's** ability to render, and the effect of, a decision hereunder shall not be impaired by any negotiations in connection with the dispute presented, whether or not the **Commissioner** participated therein. The **Commissioner** may or, at the request of any party to the dispute, shall compel the participation of any **Other Contractor** with a contract related to the **Work** of this **Contract**, and that **Contractor** shall be bound by the decision of the **Commissioner**. Any **Other Contractor** thus brought into the dispute resolution proceeding shall have the same rights and obligations under this Article 27 as the **Contractor** initiating the dispute.

27.4.2 **Commissioner** Determination. Within thirty (30) **Days** after the receipt of all materials and information, or such longer time as may be agreed to by the parties, the **Commissioner** shall make his or her determination and shall deliver or send a copy of such determination to the **Contractor**, the **ACCO,** and **Engineer**, **Resident Engineer**, **Engineering Audit Officer**, or other designee of the **Commissioner**, as applicable, together with a statement concerning how the decision may be appealed.

27.4.3 Finality of **Commissioner's** Decision. The **Commissioner's** decision shall be final and binding on all parties, unless presented to the Contract Dispute Resolution Board pursuant to this Article 27. The **City** may not take a petition to the Contract Dispute Resolution Board. However, should the **Contractor** take such a petition, the **City** may seek, and the Contract Dispute Resolution Board may render, a determination less favorable to the **Contractor** and more favorable to the **City** than the decision of the **Commissioner**.

27.5 Presentation of Dispute to the **Comptroller**. Before any dispute may be brought by the **Contractor** to the Contract Dispute Resolution Board, the **Contractor** must first present its claim to the **Comptroller** for his or her review, investigation, and possible adjustment.

27.5.1 Time, Form, and Content of Notice. Within thirty (30) **Days** of its receipt of a decision by the **Commissioner,** the **Contractor** shall submit to the **Comptroller** and to the **Commissioner** a Notice of Claim regarding its dispute with the **Agency**. The Notice of Claim shall consist of (i) a brief written statement of the substance of the dispute, the amount of money, if any, claimed and the reason(s) the **Contractor** contends the dispute was wrongly decided by the **Commissioner**; (ii) a copy of the written decision of the **Commissioner**; and (iii) a copy of all materials submitted by the **Contractor** to the **Agency**, including the Notice of Dispute. The **Contractor** may not present to the **Comptroller** any material not presented to the **Commissioner**, except at the request of the **Comptroller**.

27.5.2 Response. Within thirty (30) **Days** of receipt of the Notice of Claim, the **Agency** shall make available to the **Comptroller** a copy of all material submitted by the **Agency** to the **Commissioner** in connection with the dispute. The **Agency** may not present to the **Comptroller** any material not presented to the **Commissioner** except at the request of the **Comptroller**.

27.5.3 **Comptroller** Investigation. The **Comptroller** may investigate the claim in dispute and, in the course of such investigation, may exercise all powers provided in Sections 7-201 and 7-203 of the Administrative Code. In addition, the **Comptroller** may demand of either party, and such party shall provide, whatever additional material the **Comptroller** deems pertinent to the claim, including original business records of the **Contractor**. Willful failure of the **Contractor** to produce within fifteen (15) **Days** any material requested by the **Comptroller** shall constitute a waiver by the **Contractor** of its claim. The **Comptroller** may also schedule an informal conference to be attended by the **Contractor**, **Agency** representatives, and any other personnel desired by the **Comptroller**.

27.5.4 Opportunity of **Comptroller** to Compromise or Adjust Claim. The **Comptroller** shall have forty-five (45) **Days** from his or her receipt of all materials referred to in Article 27.5.3 to investigate the disputed claim. The period for investigation and compromise may be further extended by agreement between the **Contractor** and the **Comptroller**, to a maximum of ninety (90) **Days** from the **Comptroller's** receipt of all materials. The **Contractor** may not present its petition to the Contract Dispute Resolution Board until the period for investigation and compromise delineated in this Article 27.5.4 has expired. In compromising or adjusting any claim hereunder, the **Comptroller** may not revise or disregard the terms of the **Contract** between the parties.

27.6 Contract Dispute Resolution Board. There shall be a Contract Dispute Resolution Board composed of:

27.6.1 The chief administrative law judge of the Office of Administrative Trials and Hearings (OATH) or his/her designated OATH administrative law judge, who shall act as chairperson, and may adopt operational procedures and issue such orders consistent with this Article 27 as may be necessary in the execution of the Contract Dispute Resolution Board's functions, including, but not limited to, granting extensions of time to present or respond to submissions;

27.6.2 The **CCPO** or his/her designee; any designee shall have the requisite background to consider and resolve the merits of the dispute and shall not have participated personally and substantially in the particular matter that is the subject of the dispute or report to anyone who so participated; and

27.6.3 A person with appropriate expertise who is not an employee of the **City**. This person shall be selected by the presiding administrative law judge from a prequalified panel of individuals, established and administered by OATH with appropriate background to act as decision-makers in a dispute. Such individual may not have a contract or dispute with the **City** or be an officer or employee of any company or organization that does, or regularly represents persons, companies, or organizations having disputes with the **City**.

27.7 Petition to the Contract Dispute Resolution Board. In the event the claim has not been settled or adjusted by the **Comptroller** within the period provided in this Article 27, the **Contractor**,

within thirty (30) **Days** thereafter, may petition the Contract Dispute Resolution Board to review the **Commissioner's** determination.

27.7.1 Form and Content of Petition by **Contractor**. The **Contractor** shall present its dispute to the Contract Dispute Resolution Board in the form of a petition, which shall include (i) a brief written statement of the substance of the dispute, the amount of money, if any, claimed, and the reason(s) the **Contractor** contends the dispute was wrongly decided by the **Commissioner**; (ii) a copy of the written Decision of the **Commissioner,** (iii) copies of all materials submitted by the **Contractor** to the Agency; (iv) a copy of the written decision of the **Comptroller**, if any, and (v) copies of all correspondence with, or written material submitted by the **Contractor**, to the **Comptroller**. The **Contractor** shall concurrently submit four (4) complete sets of the Petition: one set to the **City** Corporation Counsel (Attn: Commercial and Real Estate Litigation Division) and three (3) sets to the Contract Dispute Resolution Board at OATH's offices with proof of service on the **City** Corporation Counsel. In addition, the **Contractor** shall submit a copy of the written statement of the substance of the dispute, cited in (i) above, to both the **Commissioner** and the **Comptroller**.

27.7.2 **Agency** Response. Within thirty (30) **Days** of its receipt of the Petition by the **City** Corporation Counsel, the **Agency** shall respond to the brief written statement of the **Contractor** and make available to the Contract Dispute Resolution Board all material it submitted to the **Commissioner** and **Comptroller**. Three (3) complete copies of the **Agency** response shall be provided to the Contract Dispute Resolution Board and one to the **Contractor**. Extensions of time for submittal of the **Agency** response shall be given as necessary upon a showing of good cause or, upon consent of the parties, for an initial period of up to thirty (30) Days.

27.7.3 Further Proceedings. The Contract Dispute Resolution Board shall permit the **Contractor** to present its case by submission of memoranda, briefs, and oral argument. The Contract Dispute Resolution Board shall also permit the **Agency** to present its case in response to the **Contractor** by submission of memoranda, briefs, and oral argument. If requested by the **City** Corporation Counsel, the **Comptroller** shall provide reasonable assistance in the preparation of the **Agency's** case. Neither the **Contractor** nor the **Agency** may support its case with any documentation or other material that was not considered by the **Comptroller**, unless requested by the Contract Dispute Resolution Board. The Contract Dispute Resolution Board, in its discretion, may seek such technical or other expert advice as it shall deem appropriate and may seek, on its own or upon application of a party, any such additional material from any party as it deems fit. The Contract Dispute Resolution Board, in its discretion, may combine more than one dispute between the parties for concurrent resolution.

27.7.4 Contract Dispute Resolution Board Determination. Within forty-five (45) **Days** of the conclusion of all written submissions and oral arguments, the Contract Dispute Resolution Board shall render a written decision resolving the dispute. In an unusually complex case, the Contract Dispute Resolution Board may render its decision in a longer period, not to exceed ninety (90) **Days**, and shall so advise the parties at the commencement of this period. The Contract Dispute Resolution Board's decision must be consistent with the terms of the **Contract**. Decisions of the Contract Dispute Resolution Board shall only resolve matters before the Contract Dispute Resolution Board and shall not have precedential effect with respect to matters not before the Contract Dispute Resolution Board.

27.7.5 Notification of Contract Dispute Resolution Board Decision. The Contract Dispute Resolution Board shall send a copy of its decision to the **Contractor**, the **ACCO**, the Engineer, the **Comptroller**, the **City** Corporation Counsel, the CCPO, and the **PPB**. A decision in favor of the **Contractor** shall be subject to the prompt payment provisions of the **PPB** Rules. The Required Payment Date shall be thirty (30) Days after the date the parties are formally notified of the Contract Dispute Resolution Board's decision.

27.7.6 Finality of Contract Dispute Resolution Board Decision. The Contract Dispute Resolution Board's decision shall be final and binding on all parties. Any party may seek review of the Contract Dispute Resolution Board's decision solely in the form of a challenge, filed within four (4) months of the date of the Contract Dispute Resolution Board's decision, in a court of competent jurisdiction of the State of New York, County of New York pursuant to Article 78 of the Civil Practice Law and Rules. Such review by the court shall be limited to the question of whether or not the Contract Dispute Resolution Board's decision was made in violation of lawful procedure, was affected by an error of **Law**, or was arbitrary and capricious or an abuse of discretion. No evidence or information shall be introduced or relied upon in such proceeding that was not presented to the Contract Dispute Resolution Board in accordance with this Article 27.

27.8 Any termination, cancellation, or alleged breach of the **Contract** prior to or during the pendency of any proceedings pursuant to this Article 27 shall not affect or impair the ability of the **Commissioner** or Contract Dispute Resolution Board to make a binding and final decision pursuant to this Article 27.

ARTICLE 28. RECORD KEEPING FOR EXTRA OR DISPUTED WORK OR WORK ON A TIME & MATERIALS BASIS

28.1 While the **Contractor** or any of its **Subcontractors** is performing **Work** on a time and material basis or **Extra Work** on a time and material basis ordered by the **Commissioner** under Article 25, or where the **Contractor** believes that it or any of its **Subcontractors** is performing **Extra Work** but a final determination by **Agency** has not been made, or the **Contractor** or any of its **Subcontractors** is performing disputed **Work** (whether on or off the **Site**), or complying with a determination or order under protest in accordance with Articles 11, 27, and 30, in each such case the **Contractor** shall furnish the **Resident Engineer** daily with three (3) copies of written statements signed by the **Contractor's** representative at the **Site** showing:

28.1.1 The name, trade, and number of each worker employed on such **Work** or engaged in complying with such determination or order, the number of hours employed, and the character of the **Work** each is doing; and

28.1.2 The nature and quantity of any materials, plant and equipment furnished or used in connection with the performance of such **Work** or compliance with such determination or order, and from whom purchased or rented.

28.2 A copy of such statement will be countersigned by the **Resident Engineer**, noting thereon any items not agreed to or questioned, and will be returned to the **Contractor** within two (2) **Days** after submission.

28.3 The **Contractor** and its **Subcontractors**, when required by the **Commissioner**, or the **Comptroller**, shall also produce for inspection, at the office of the **Contractor** or **Subcontractor**, any and all of its books, bid documents, financial statements, vouchers, records, daily job diaries and reports,

and cancelled checks, and any other documents relating to showing the nature and quantity of the labor, materials, plant and equipment actually used in the performance of such **Work**, or in complying with such determination or order, and the amounts expended therefor, and shall permit the **Commissioner** and the **Comptroller** to make such extracts therefrom, or copies thereof, as they or either of them may desire.

28.4 In connection with the examination provided for herein, the **Commissioner**, upon demand therefor, will produce for inspection by the **Contractor** such records as the **Agency** may have with respect to such **Extra Work** or disputed **Work** performed under protest pursuant to order of the **Commissioner**, except those records and reports which may have been prepared for the purpose of determining the accuracy and validity of the **Contractor's** claim.

28.5 Failure to comply strictly with these requirements shall constitute a waiver of any claim for extra compensation or damages on account of the performance of such **Work** or compliance with such determination or order.

ARTICLE 29. OMITTED WORK

29.1 If any **Contract Work** in a lump sum **Contract**, or if any part of a lump sum item in a unit price, lump sum, or percentage-bid **Contract** is omitted by the **Commissioner** pursuant to Article 33, the **Contract** price, subject to audit by the EAO, shall be reduced by a pro rata portion of the lump sum bid amount based upon the percent of **Work** omitted subject to Article 29.4. For the purpose of determining the pro rata portion of the lump sum bid amount, the bid breakdown submitted in accordance with Article 41 shall be considered, but shall not be the determining factor.

29.2 If the whole of a lump sum item or units of any other item is so omitted by the **Commissioner** in a unit price, lump sum, or percentage-bid **Contract**, then no payment will be made therefor except as provided in Article 29.4.

29.3 For units that have been ordered but are only partially completed, the unit price shall be reduced by a pro rata portion of the unit price bid based upon the percentage of **Work** omitted subject to Article 29.4.

29.4 In the event the **Contractor**, with respect to any omitted **Work**, has purchased any non-cancelable material and/or equipment that is not capable of use except in the performance of this **Contract** and has been specifically fabricated for the sole purpose of this **Contract**, but not yet incorporated into the **Work**, the **Contractor** shall be paid for such material and/or equipment in accordance with Article 64.2.1(b); provided, however, such payment is contingent upon the **Contractor's** delivery of such material and/or equipment in acceptable condition to a location designated by the **City**.

29.5 The **Contractor** agrees to make no claim for damages or for loss of overhead and profit with regard to any omitted **Work**.

ARTICLE 30. NOTICE AND DOCUMENTATION OF COSTS AND DAMAGES; PRODUCTION OF FINANCIAL RECORDS

30.1 If the **Contractor** shall claim to be sustaining damages by reason of any act or omission of the **City** or its agents, it shall submit to the **Commissioner** within forty-five (45) **Days** from the time such damages are first incurred, and every thirty (30) **Days** thereafter to the extent additional damages are being incurred for the same condition, verified statements of the details and the amounts of such

damages, together with documentary evidence of such damages. The **Contractor** may submit any of the above statements within such additional time as may be granted by the **Commissioner** in writing upon written request therefor. Failure of the **Commissioner** to respond in writing to a written request for additional time within thirty (30) **Days** shall be deemed a denial of the request. On failure of the **Contractor** to strictly comply with the foregoing provisions, such claims shall be deemed waived and no right to recover on such claims shall exist. Damages that the **Contractor** may claim in any action or dispute resolution procedure arising under or by reason of this **Contract** shall not be different from or in excess of the statements and documentation made pursuant to this Article 30. This Article 30.1 does not apply to claims submitted to the **Commissioner** pursuant to Article 11 or to claims disputing a determination under Article 27.

30.2 In addition to the foregoing statements, the **Contractor** shall, upon notice from the **Commissioner**, produce for examination at the **Contractor's** office, by the **Engineer**, **Architect** or **Project Manager**, all of its books of account, bills, invoices, payrolls, subcontracts, time books, daily reports, bank deposit books, bank statements, check books, and cancelled checks, showing all of its acts and transactions in connection with or relating to or arising by reason of this **Contract**, and submit itself and persons in its employment, for examination under oath by any person designated by the **Commissioner** or **Comptroller** to investigate claims made or disputes against the **City** under this **Contract**. At such examination, a duly authorized representative of the **Contractor** may be present.

30.3 In addition to the statements required under Article 28 and this Article 30, the **Contractor** and/or its **Subcontractor** shall, within thirty (30) **Days** upon notice from the **Commissioner** or **Comptroller**, produce for examination at the **Contractor's** and/or **Subcontractor's** office, by a representative of either the **Commissioner** or **Comptroller**, all of its books of account, bid documents, financial statements, accountant workpapers, bills, invoices, payrolls, subcontracts, time books, daily reports, bank deposit books, bank statements, check books, and cancelled checks, showing all of its acts and transactions in connection with or relating to or arising by reason of this **Contract**. Further, the **Contractor** and/or its **Subcontractor** shall submit any person in its employment, for examination under oath by any person designated by the **Commissioner** or **Comptroller** to investigate claims made or disputes against the **City** under this **Contract**. At such examination, a duly authorized representative of the **Contractor** may be present.

30.4 Unless the information and examination required under Article 30.3 is provided by the **Contractor** and/or its **Subcontractor** upon thirty (30) **Days'** notice from the **Commissioner** or **Comptroller**, or upon the **Commissioner's** or **Comptroller's** written authorization to extend the time to comply, the **City** shall be released from all claims arising under, relating to or by reason of this **Contract**, except for sums certified by the **Commissioner** to be due under the provisions of this **Contract**. It is further stipulated and agreed that no person has the power to waive any of the foregoing provisions and that in any action or dispute resolution procedure against the **City** to recover any sum in excess of the sums certified by the **Commissioner** to be due under or by reason of this **Contract**, the **Contractor** must allege in its complaint and prove, at trial or during such dispute resolution procedure, compliance with the provisions of this Article 30.

30.5 In addition, after the commencement of any action or dispute resolution procedure by the **Contractor** arising under or by reason of this **Contract**, the **City** shall have the right to require the **Contractor** to produce for examination under oath, up until the trial of the action or hearing before the Contract Dispute Resolution Board, the books and documents described in Article 30.3 and submit itself and all persons in its employ for examination under oath. If this Article 30 is not complied with as required, then the **Contractor** hereby consents to the dismissal of the action or dispute resolution procedure.

CHAPTER VII: POWERS OF THE RESIDENT ENGINEER,THE ENGINEER OR ARCHITECT AND THE COMMISSIONER

ARTICLE 31. THE RESIDENT ENGINEER

31.1 The **Resident Engineer** shall have the power to inspect, supervise, and control the performance of the **Work**, subject to review by the **Commissioner**. The **Resident Engineer** shall not, however, have the power to issue an **Extra Work** order, except as specifically designated in writing by the **Commissioner**.

ARTICLE 32. THE ENGINEER OR ARCHITECT OR PROJECT MANAGER

32.1 The **Engineer** or **Architect** or **Project Manager**, in addition to those matters elsewhere herein delegated to the **Engineer** and expressly made subject to his/her determination, direction or approval, shall have the power, subject to review by the **Commissioner**:

32.1.1 To determine the amount, quality, and location of the **Work** to be paid for hereunder; and

32.1.2 To determine all questions in relation to the **Work**, to interpret the **Contract Drawings**, **Specifications**, and **Addenda**, and to resolve all patent inconsistencies or ambiguities therein; and

32.1.3 To determine how the **Work** of this **Contract** shall be coordinated with **Work** of **Other Contractors** engaged simultaneously on this **Project**, including the power to suspend any part of the **Work**, but not the whole thereof; and

32.1.4 To make minor changes in the **Work** as he/she deems necessary, provided such changes do not result in a net change in the cost to the **City** or to the **Contractor** of the **Work** to be done under the **Contract**; and

32.1.5 To amplify the **Contract Drawings**, add explanatory information and furnish additional **Specifications** and drawings, consistent with this **Contract**.

32.2 The foregoing enumeration shall not imply any limitation upon the power of the **Engineer** or **Architect** or **Project Manager**, for it is the intent of this **Contract** that all of the **Work** shall generally be subject to his/her determination, direction, and approval, except where the determination, direction or approval of someone other than the **Engineer** or **Architect** or **Project Manager** is expressly called for herein.

32.3 The **Engineer** or **Architect** or **Project Manager** shall not, however, have the power to issue an **Extra Work** order, except as specifically designated in writing by the **Commissioner**.

ARTICLE 33. THE COMMISSIONER

33.1 The **Commissioner**, in addition to those matters elsewhere herein expressly made subject to his/her determination, direction or approval, shall have the power:

33.1.1 To review and make determinations on any and all questions in relation to this **Contract** and its performance; and

33.1.2 To modify or change this **Contract** so as to require the performance of **Extra Work** (subject, however, to the limitations specified in Article 25) or the omission of **Contract Work**; and

33.1.3 To suspend the whole or any part of the **Work** whenever in his/her judgment such suspension is required:

33.1.3(a) In the interest of the **City** generally; or

33.1.3(b) To coordinate the **Work** of the various contractors engaged on this **Project** pursuant to the provisions of Article 12; or

33.1.3(c) To expedite the completion of the entire **Project** even though the completion of this particular **Contract** may thereby be delayed.

ARTICLE 34. NO ESTOPPEL

34.1 Neither the **City** nor any **Agency**, official, agent or employee thereof, shall be bound, precluded or estopped by any determination, decision, approval, order, letter, payment or certificate made or given under or in connection with this **Contract** by the **City**, the **Commissioner**, the **Engineer**, the **Resident Engineer**, or any other official, agent or employee of the **City**, either before or after the final completion and acceptance of the **Work** and payment therefor:

34.1.1 From showing the true and correct classification, amount, quality or character of the **Work** actually done; or that any such determination, decision, order, letter, payment or certificate was untrue, incorrect or improperly made in any particular, or that the **Work**, or any part thereof, does not in fact conform to the requirements of this **Contract**; and

34.1.2 From demanding and recovering from the **Contractor** any overpayment made to it, or such damages as the **City** may sustain by reason of the **Contractor's** failure to perform each and every part of its **Contract**.

CHAPTER VIII: LABOR PROVISIONS

ARTICLE 35. EMPLOYEES

35.1 The **Contractor** and its **Subcontractors** shall not employ on the **Work**:

35.1.1 Anyone who is not competent, faithful and skilled in the **Work** for which he/she shall be employed; and whenever the **Commissioner** shall inform the **Contractor**, in writing, that any employee is, in his/her opinion, incompetent, unfaithful or disobedient, that employee shall be discharged from the **Work** forthwith, and shall not again be employed upon it; or

35.1.2 Any labor, materials or means whose employment, or utilization during the course of this **Contract**, may tend to or in any way cause or result in strikes, work stoppages, delays, suspension of **Work** or similar troubles by workers employed by the **Contractor** or its **Subcontractors**, or by any of the trades working in or about the buildings and premises where **Work** is being performed under this **Contract**, or by **Other Contractors** or their **Subcontractors** pursuant to other contracts, or on any other building or premises owned or operated by the **City**, its **Agencies**, departments, boards or authorities. Any violation by the **Contractor** of this requirement may, upon certification of the **Commissioner**, be considered as proper and sufficient cause for declaring the **Contractor** to be in default, and for the **City** to take action against it as set forth in Chapter X of this **Contract**, or such other article of this **Contract** as the Commissioner may deem proper; or

35.1.3 In accordance with Section 220.3-e of the Labor Law of the State of New York (hereinafter "Labor Law"), the **Contractor** and its **Subcontractors** shall not employ on the **Work** any apprentice, unless he/she is a registered individual, under a bona fide program registered with the New York State Department of Labor. The allowable ratio of apprentices to journey-level workers in any craft classification shall not be greater than the ratio permitted to the **Contractor** as to its work force on any job under the registered program. Any employee listed on a payroll at an apprentice wage rate, who is not registered as above, shall be paid the wage rate determined by the **Comptroller** of the **City** for the classification of **Work** actually performed. The **Contractor** or **Subcontractor** will be required to furnish written evidence of the registration of its program and apprentices as well as all the appropriate ratios and wage rates, for the area of the construction prior to using any apprentices on the **Contract Work**.

35.2 If the total cost of the **Work** under this **Contract** is at least two hundred fifty thousand ($250,000) dollars, all laborers, workers, and mechanics employed in the performance of the C**ontract** on the public work site, either by the **Contractor**, **Subcontractor** or other person doing or contracting to do the whole or a part of the **Work** contemplated by the **Contract**, shall be certified prior to performing any **Work** as having successfully completed a course in construction safety and health approved by the United States Department of Labor's Occupational Safety and Health Administration that is at least ten (10) hours in duration.

35.3 In accordance with Local Law Nos. 30-2012 and 33-2012, codified at sections 6-132 and 12-113 of the Administrative Code, respectively,

35.3.1 The **Contractor** shall not take an adverse personnel action with respect to an officer or employee in retaliation for such officer or employee making a report of information concerning conduct which such officer or employee knows or reasonably believes to involve corruption, criminal activity, conflict of interest, gross mismanagement or abuse of authority by any officer or employee relating to this **Contract** to (a) the Commissioner of the Department of Investigation, (b) a member of the New York City Council, the Public Advocate, or the **Comptroller**, or (c) the **CCPO**, **ACCO**, **Agency** head, or **Commissioner**.

35.3.2 If any of the **Contractor**'s officers or employees believes that he or she has been the subject of an adverse personnel action in violation of Article 35.3.1, he or she shall be entitled to bring a cause of action against the **Contractor** to recover all relief necessary to make him or her whole. Such relief may include but is not limited to: (a) an injunction to restrain continued retaliation, (b) reinstatement to the position such employee would have had but for the retaliation or to an equivalent position, (c) reinstatement of full fringe benefits and seniority rights, (d) payment of two times back

pay, plus interest, and (e) compensation for any special damages sustained as a result of the retaliation, including litigation costs and reasonable attorney's fees.

35.3.3 The **Contractor** shall post a notice provided by the **City** in a prominent and accessible place on any site where work pursuant to the **Contract** is performed that contains information about:

35.3.3(a) how its employees can report to the New York City Department of Investigation allegations of fraud, false claims, criminality or corruption arising out of or in connection with the **Contract**; and

35.3.3(b) the rights and remedies afforded to its employees under Administrative Code sections 7-805 (the New York City False Claims Act) and 12-113 (the Whistleblower Protection Expansion Act) for lawful acts taken in connection with the reporting of allegations of fraud, false claims, criminality or corruption in connection with the **Contract**.

35.3.4 For the purposes of this Article 35.3, "adverse personnel action" includes dismissal, demotion, suspension, disciplinary action, negative performance evaluation, any action resulting in loss of staff, office space, equipment or other benefit, failure to appoint, failure to promote, or any transfer or assignment or failure to transfer or assign against the wishes of the affected officer or employee.

35.3.5 This Article 35.3 is applicable to all of the **Contractor**'s **Subcontractors** having subcontracts with a value in excess of $100,000; accordingly, the **Contractor** shall include this rider in all subcontracts with a value a value in excess of $100,000.

35.4 Article 35.3 is not applicable to this **Contract** if it is valued at $100,000 or less. Articles 35.3.1, 35.3.2, 35.3.4, and 35.3.5 are not applicable to this **Contract** if it was solicited pursuant to a finding of an emergency.

35.5 Paid Sick Leave Law.

35.5.1 Introduction and General Provisions.

35.5.1(a) The Earned Sick Time Act, also known as the Paid Sick Leave Law ("PSLL"), requires covered employees who annually perform more than 80 hours of work in New York City to be provided with paid sick time.[2] Contractors of the **City** or of other governmental entities may be required to provide sick time pursuant to the PSLL.

35.5.1(b) The PSLL became effective on April 1, 2014, and is codified at Title 20, Chapter 8, of the New York City Administrative Code. It is administered by the City's Department of Consumer Affairs ("DCA"); DCA's rules promulgated under the PSLL are codified at Chapter 7 of Title 6 of the Rules of the City of New York ("Rules").

[2] Pursuant to the PSLL, if fewer than five employees work for the same employer, as determined pursuant to New York City Administrative Code § 20-912(g), such employer has the option of providing such employees uncompensated sick time.

35.5.1(c) The **Contractor** agrees to comply in all respects with the PSLL and the Rules, and as amended, if applicable, in the performance of this **Contract**. The **Contractor** further acknowledges that such compliance is a material term of this **Contract** and that failure to comply with the PSLL in performance of this **Contract** may result in its termination.

35.5.1(d) The **Contractor** must notify the **Agency Chief Contracting Officer** of the **Agency** with whom it is contracting in writing within ten (10) days of receipt of a complaint (whether oral or written) regarding the PSLL involving the performance of this **Contract**. Additionally, the **Contractor** must cooperate with DCA's education efforts and must comply with DCA's subpoenas and other document demands as set forth in the PSLL and Rules.

35.5.1(e) The PSLL is summarized below for the convenience of the **Contractor**. The **Contractor** is advised to review the PSLL and Rules in their entirety. On the website www.nyc.gov/PaidSickLeave there are links to the PSLL and the associated Rules as well as additional resources for employers, such as Frequently Asked Questions, timekeeping tools and model forms, and an event calendar of upcoming presentations and webinars at which the **Contractor** can get more information about how to comply with the PSLL. The **Contractor** acknowledges that it is responsible for compliance with the PSLL notwithstanding any inconsistent language contained herein.

35.5.2 Pursuant to the PSLL and the Rules: Applicability, Accrual, and Use.

35.5.2(a) An employee who works within the City of New York for more than eighty hours in any consecutive 12-month period designated by the employer as its "calendar year" pursuant to the PSLL ("Year") must be provided sick time. Employers must provide a minimum of one hour of sick time for every 30 hours worked by an employee and compensation for such sick time must be provided at the greater of the employee's regular hourly rate or the minimum wage. Employers are not required to provide more than 40 hours of sick time to an employee in any Year.

35.5.2(b) An employee has the right to determine how much sick time he or she will use, provided that employers may set a reasonable minimum increment for the use of sick time not to exceed four hours per **Day**. In addition, an employee may carry over up to 40 hours of unused sick time to the following Year, provided that no employer is required to allow the use of more than forty hours of sick time in a Year or carry over unused paid sick time if the employee is paid for such unused sick time and the employer provides the employee with at least the legally required amount of paid sick time for such employee for the immediately subsequent Year on the first **Day** of such Year.

35.5.2(c) An employee entitled to sick time pursuant to the PSLL may use sick time for any of the following:

i. such employee's mental illness, physical illness, injury, or health condition or the care of such illness, injury, or condition or such employee's need for medical diagnosis or preventive medical care;
ii. such employee's care of a family member (an employee's child, spouse, domestic partner, parent, sibling, grandchild or grandparent, or the child or parent of an employee's spouse or domestic partner) who has a mental

illness, physical illness, injury or health condition or who has a need for medical diagnosis or preventive medical care;

iii. closure of such employee's place of business by order of a public official due to a public health emergency; or

iv. such employee's need to care for a child whose school or childcare provider has been closed due to a public health emergency.

35.5.2(d) An employer must not require an employee, as a condition of taking sick time, to search for a replacement. However, an employer may require an employee to provide: reasonable notice of the need to use sick time; reasonable documentation that the use of sick time was needed for a reason above if for an absence of more than three consecutive work days; and/or written confirmation that an employee used sick time pursuant to the PSLL. However, an employer may not require documentation specifying the nature of a medical condition or otherwise require disclosure of the details of a medical condition as a condition of providing sick time and health information obtained solely due to an employee's use of sick time pursuant to the PSLL must be treated by the employer as confidential.

35.5.2(e) If an employer chooses to impose any permissible discretionary requirement as a condition of using sick time, it must provide to all employees a written policy containing those requirements, using a delivery method that reasonably ensures that employees receive the policy. If such employer has not provided its written policy, it may not deny sick time to an employee because of non-compliance with such a policy.

35.5.2(f) Sick time to which an employee is entitled must be paid no later than the payday for the next regular payroll period beginning after the sick time was used.

35.5.3 Exemptions and Exceptions. Notwithstanding the above, the PSLL does not apply to any of the following:

35.5.3(a) an independent contractor who does not meet the definition of employee under section 190(2) of the New York State Labor Law;

35.5.3(b) an employee covered by a valid collective bargaining agreement in effect on April 1, 2014, until the termination of such agreement;

35.5.3(c) an employee in the construction or grocery industry covered by a valid collective bargaining agreement if the provisions of the PSLL are expressly waived in such collective bargaining agreement;

35.5.3(d) an employee covered by another valid collective bargaining agreement if such provisions are expressly waived in such agreement and such agreement provides a benefit comparable to that provided by the PSLL for such employee;

35.5.3(e) an audiologist, occupational therapist, physical therapist, or speech language pathologist who is licensed by the New York State Department of Education and who calls in for work assignments at will, determines his or her own schedule, has the ability to reject or accept any assignment referred to him or her, and is paid an average hourly wage that is at least four times the federal minimum wage;

35.5.3(f) an employee in a work study program under Section 2753 of Chapter 42 of the United States Code;

35.5.3(g) an employee whose work is compensated by a qualified scholarship program as that term is defined in the Internal Revenue Code, Section 117 of Chapter 20 of the United States Code; or

35.5.3(h) a participant in a Work Experience Program (WEP) under section 336-c of the New York State Social Services Law.

35.5.4 Retaliation Prohibited. An employer may not threaten or engage in retaliation against an employee for exercising or attempting in good faith to exercise any right provided by the PSLL. In addition, an employer may not interfere with any investigation, proceeding, or hearing pursuant to the PSLL.

35.5.5 Notice of Rights.

35.5.5(a) An employer must provide its employees with written notice of their rights pursuant to the PSLL. Such notice must be in English and the primary language spoken by an employee, provided that DCA has made available a translation into such language. Downloadable notices are available on DCA's website at http://www.nyc.gov/html/dca/html/law/PaidSickLeave.shtml.

35.5.5(b) Any person or entity that willfully violates these notice requirements is subject to a civil penalty in an amount not to exceed fifty dollars for each employee who was not given appropriate notice.

35.5.6 Records. An employer must retain records documenting its compliance with the PSLL for a period of at least three years, and must allow DCA to access such records in furtherance of an investigation related to an alleged violation of the PSLL.

35.5.7 Enforcement and Penalties.

35.5.7(a) Upon receiving a complaint alleging a violation of the PSLL, DCA has the right to investigate such complaint and attempt to resolve it through mediation. Within 30 **Days** of written notification of a complaint by DCA, or sooner in certain circumstances, the employer must provide DCA with a written response and such other information as DCA may request. If DCA believes that a violation of the PSLL has occurred, it has the right to issue a notice of violation to the employer.

35.5.7(b) DCA has the power to grant an employee or former employee all appropriate relief as set forth in New York City Administrative Code § 20-924(d). Such relief may include, among other remedies, treble damages for the wages that should have been paid, damages for unlawful retaliation, and damages and reinstatement for unlawful discharge. In addition, DCA may impose on an employer found to have violated the PSLL civil penalties not to exceed $500 for a first violation, $750 for a second violation within two years of the first violation, and $1,000 for each succeeding violation within two years of the previous violation.

35.5.8 More Generous Polices and Other Legal Requirements. Nothing in the PSLL is intended to discourage, prohibit, diminish, or impair the adoption or retention of a more generous sick time policy, or the obligation of an employer to comply with any contract,

collective bargaining agreement, employment benefit plan or other agreement providing more generous sick time. The PSLL provides minimum requirements pertaining to sick time and does not preempt, limit or otherwise affect the applicability of any other law, regulation, rule, requirement, policy or standard that provides for greater accrual or use by employees of sick leave or time, whether paid or unpaid, or that extends other protections to employees. The PSLL may not be construed as creating or imposing any requirement in conflict with any federal or state law, rule or regulation.

35.6 HireNYC: Hiring and Reporting Requirements. This Article 35.6 applies to construction contracts of $1,000,000 or more. The **Contractor** shall comply with the requirements of Articles 35.6.1-35.6.5 for all non-trades jobs (e.g., for an administrative position arising out of **Work** ant located in New York City). The **Contractor** shall reasonably cooperate with SBS and the **City** on specific outreach events, including "Hire-on-the-Spot" events, for the hiring of trades workers in connection with the **Work**. If provided elsewhere in this **Contract**, this **Contract** is subject to a project labor agreement.

35.6.1 Enrollment. The **Contractor** shall enroll with the HireNYC system, found at www.nyc.gov/sbs, within thirty (30) days after the registration of this **Contract** pursuant to Section 328 of the New York City Charter. The **Contractor** shall provide information about the business, designate a primary contact and say whether it intends to hire for any entry to mid-level job opportunities arising from this **Contract** and located in New York City, and, if so, the approximate start date of the first hire.

35.6.2 Job Posting Requirements.

35.6.2(a) Once enrolled in HireNYC, the **Contractor** agrees to update the HireNYC portal with all entry to mid-level job opportunities arising from this **Contract** and located in New York City, if any, which shall be defined as jobs requiring no more than an associate degree, as provided by the New York State Department of Labor (see Column F of https://labor.ny.gov/stats/2012-2022- NYS-Employment-Prospects.xls). The information to be updated includes the types of entry and mid-level positions made available from the work arising from the **Contract** and located in New York City, the number of positions, the anticipated schedule of initiating the hiring process for these positions, and the contact information for the **Contractor's** representative charged with overseeing hiring. The **Contractor** must update the HireNYC portal with any hiring needs arising from the contract and located in New York City, and the requirements of the jobs to be filled, no less than three weeks prior to the intended first day of employment for each new position, except with the permission of SBS, not to be unreasonably withheld, and must also update the HireNYC portal as set forth below.

35.6.2(b) After enrollment through HireNYC and submission of relevant information, SBS will work with the **Contractor** to develop a recruitment plan which will outline the candidate screening process, and will provide clear instructions as to when, where, and how interviews will take place. HireNYC will screen applicants based on employer requirements and refer applicants whom it believes are qualified to the **Contractor** for interviews. The **Contractor** must interview referred applicants whom it believes are qualified.

35.6.2(c) After completing an interview of a candidate referred by HireNYC, the **Contractor** must provide feedback via the portal within twenty (20) business days to indicate which candidates were interviewed and hired, if any. In addition, the **Contractor** shall provide the start date of new hires, and additional information

reasonably related to such hires, within twenty (20) business days after the start date. In the event the **Contractor** does not have any job openings covered by this Rider in any given year, the **Contractor** shall be required to provide an annual update to HireNYC to that effect. For this purpose, the reporting year shall run from the date of the registration of the **Contract** pursuant to Charter section 328 and each anniversary date.

35.6.2(d) These requirements do not limit the **Contractor's** ability to assess the qualifications of prospective workers, and to make final hiring and retention decisions. No provision of this Article 35.6 shall be interpreted so as to require the **Contractor** to employ any particular worker.

35.6.2(e) In addition, the provisions of this Article 35.6 shall not apply to positions that the **Contractor** intends to fill with employees employed pursuant to the job retention provision of Section 22-505 of the Administrative Code of the City of New York. The **Contractor** shall not be required to report such openings with HireNYC. However, the **Contractor** shall enroll with the HireNYC system pursuant to Article 35.6.1, above, and, if such positions subsequently become open, then the remaining provisions of this Article 35.6 will apply.

35.6.3 Breach and Liquidated Damages. If the **Contractor** fails to comply with the terms of the **ContrSact** and this Article 35.6 (l) by not enrolling its business with HireNYC; (2) by not informing HireNYC, as required, of open positions; or (3) by failing to interview a qualified candidate, the **Agency** may assess liquidated damages in the amount of two-thousand five hundred dollars ($2,500) per breach. For all other events of noncompliance with the terms of this Article 35.6, the **Agency** may assess liquidated damages in the amount of five hundred dollars ($500) per breach. Furthermore, in the event the **Contractor** breaches the requirements of this Article 35.6 during the term of the **Contract**, the **City** may hold the **Contractor** in default of this **Contract**.

35.6.4 Audit Compliance. In addition to the auditing requirements set forth in other parts of the **Contract**, the **Contractor** shall permit SBS and the **City** to inspect any and all records concerning or relating to job openings or the hiring of individuals for work arising from the **Contract** and located in New York City. The **Contractor** shall permit an inspection within seven (7) business days of the request.

35.6.5 Other Reporting Requirements. The **Contractor** shall report to the **City**, on a monthly basis, all information reasonably requested by the **City** that is necessary for the **City** to comply with any reporting requirements imposed by **Law**, including any requirement that the **City** maintain a publicly accessible database. In addition, the **Contractor** agrees to comply with all reporting requirements imposed by **Law**, or as otherwise requested by the **City**.

35.6.6 Federal Hiring Requirements. If this **Contract** is federally funded (as indicated elsewhere in this Contract), the **Contractor** shall comply with all federal hiring requirements as may be set forth in this **Contract**, including, as applicable: (a) Section 3 of the HUD Act of 1968, which requires, to the greatest extent feasible, economic opportunities for 30 percent of new hires be given to low- and very low-income persons, particularly persons who are recipients of HUD assistance for housing and Executive Order 11246, which prohibits discrimination in employment due to race, color, religion, sex or national origin, and requires the implementation of goals for minority and female participation for work involving any construction trade.

ARTICLE 36. NO DISCRIMINATION

36.1 The **Contractor** specifically agrees, as required by Labor Law Section 220-e, as amended, that:

36.1.1 In the hiring of employees for the performance of **Work** under this **Contract** or any subcontract hereunder, neither the **Contractor**, **Subcontractor**, nor any person acting on behalf of such **Contractor** or **Subcontractor**, shall by reason of race, creed, color or national origin discriminate against any citizen of the State of New York who is qualified and available to perform the **Work** to which the employment relates;

36.1.2 Neither the **Contractor**, **Subcontractor**, nor any person on its behalf shall, in any manner, discriminate against or intimidate any employee hired for the performance of **Work** under this **Contract** on account of race, creed, color or national origin;

36.1.3 There may be deducted from the amount payable to the **Contractor** by the **City** under this **Contract** a penalty of fifty ($50.00) dollars for each person for each **Day** during which such person was discriminated against or intimidated in violation of the provisions of this **Contract**; and

36.1.4 This **Contract** may be cancelled or terminated by the **City** and all moneys due or to become due hereunder may be forfeited, for a second or any subsequent violation of the terms or conditions of this Article 36.

36.1.5 This Article 36 covers all construction, alteration and repair of any public building or public work occurring in the State of New York and the manufacture, sale, and distribution of materials, equipment, and supplies to the extent that such operations are performed within the State of New York pursuant to this **Contract**.

36.2 The **Contractor** specifically agrees, as required by Section 6-108 of the Administrative Code, as amended, that:

36.2.1 It shall be unlawful for any person engaged in the construction, alteration or repair of buildings or engaged in the construction or repair of streets or highways pursuant to a **Contract** with the **City** or engaged in the manufacture, sale or distribution of materials, equipment or supplies pursuant to a **Contract** with the **City** to refuse to employ or to refuse to continue in any employment any person on account of the race, color or creed of such person.

36.2.2 It shall be unlawful for any person or any servant, agent or employee of any person, described in Article 36.1.2, to ask, indicate or transmit, orally or in writing, directly or indirectly, the race, color or creed or religious affiliation of any person employed or seeking employment from such person, firm or corporation.

36.2.3 Breach of the foregoing provisions shall be deemed a violation of a material provision of this **Contract**.

36.2.4 Any person, or the employee, manager or owner of or officer of such firm or corporation who shall violate any of the provisions of this Article 36.2 shall, upon

conviction thereof, be punished by a fine of not more than one hundred ($100.00) dollars or by imprisonment for not more than thirty (30) **Days**, or both.

36.3 This **Contract** is subject to the requirements of Executive Order No. 50 (1980) ("E.O. 50"), as revised, and the rules and regulations promulgated thereunder. No contract will be awarded unless and until these requirements have been complied with in their entirety. By signing this **Contract**, the **Contractor** agrees that it:

36.3.1 Will not engage in any unlawful discrimination against any employee or applicant for employment because of race, creed, color, national origin, sex, age, disability, marital status or sexual orientation with respect to all employment decisions including, but not limited to, recruitment, hiring, upgrading, demotion, downgrading, transfer, training, rates of pay or other forms of compensation, layoff, termination, and all other terms and conditions of employment; and

36.3.2 Will not engage in any unlawful discrimination in the selection of **Subcontractors** on the basis of the owner's race, color, creed, national origin, sex, age, disability, marital status or sexual orientation; and

36.3.3 Will state in all solicitations or advertisements for employees placed by or on behalf of the **Contractor** that all qualified applicants will receive consideration for employment without unlawful discrimination based on race, creed, color, national origin, sex, age, citizens status, disability, marital status, sexual orientation, or that it is an equal employment opportunity employer; and

36.3.4 Will send to each labor organization or representative of workers with which it has a collective bargaining agreement or other contract or memorandum of understanding, written notification of its equal employment opportunity commitments under E.O. 50 and the rules and regulations promulgated thereunder; and

36.3.5 Will furnish, before the award of the **Contract**, all information and reports, including an employment report, that are required by E.O. 50, the rules and regulations promulgated thereunder, and orders of the **City** Department of Business Services, Division of Labor Services (**DLS**) and will permit access to its books, records, and accounts by the **DLS** for the purposes of investigation to ascertain compliance with such rules, regulations, and orders.

36.4 The **Contractor** understands that in the event of its noncompliance with the nondiscrimination clauses of this **Contract** or with any of such rules, regulations, or orders, such noncompliance shall constitute a material breach of this **Contract** and noncompliance with E.O. 50 and the rules and regulations promulgated thereunder. After a hearing held pursuant to the rules of the **DLS**, the Director of the **DLS** may direct the **Commissioner** to impose any or all of the following sanctions:

36.4.1 Disapproval of the **Contractor**; and/or

36.4.2 Suspension or termination of the **Contract**; and/or

36.4.3 Declaring the **Contractor** in default; and/or

36.4.4 In lieu of any of the foregoing sanctions, the Director of the **DLS** may impose an employment program.

In addition to any actions taken under this **Contract**, failure to comply with E.O. 50 and the rules and regulations promulgated thereunder, in one or more instances, may result in a **City Agency** declaring the **Contractor** to be non-responsible in future procurements. The **Contractor** further agrees that it will refrain from entering into any **Contract** or **Contract** modification subject to E.O. 50 and the rules and regulations promulgated thereunder with a **Subcontractor** who is not in compliance with the requirements of E.O. 50 and the rules and regulations promulgated thereunder.

36.5 The **Contractor** specifically agrees, as required by Section 6-123 of the Administrative Code, that:

36.5.1 The **Contractor** will not engage in any unlawful discriminatory practice in violation of Title 8 of the Administrative Code; and

36.5.2 Any failure to comply with this Article 36.5 may subject the **Contractor** to the remedies set forth in Section 6-123 of the Administrative Code, including, where appropriate, sanctions such as withholding of payment, imposition of an employment program, finding the **Contractor** to be in default, cancellation of the **Contract**, or any other sanction or remedy provided by **Law** or **Contract**.

ARTICLE 37. LABOR LAW REQUIREMENTS

37.1 The **Contractor** shall strictly comply with all applicable provisions of the Labor Law, as amended. Such compliance is a material term of this **Contract**.

37.2 The **Contractor** specifically agrees, as required by Labor Law Sections 220 and 220-d, as amended, that:

37.2.1 Hours of **Work**: No laborer, worker, or mechanic in the employ of the **Contractor**, **Subcontractor** or other person doing or contracting to do the whole or a part of the **Work** contemplated by this **Contract** shall be permitted or required to work more than eight (8) hours in any one (1) **Day**, or more than five (5) **Days** in any one (1) week, except as provided in the Labor Law and in cases of extraordinary emergency including fire, flood, or danger to life or property, or in the case of national emergency when so proclaimed by the President of the United States of America.

37.2.2 In situations in which there are not sufficient laborers, workers, and mechanics who may be employed to carry on expeditiously the **Work** contemplated by this **Contract** as a result of such restrictions upon the number of hours and **Days** of labor, and the immediate commencement or prosecution or completion without undue delay of the **Work** is necessary for the preservation of the **Site** and/or for the protection of the life and limb of the persons using the same, such laborers, workers, and mechanics shall be permitted or required to work more than eight (8) hours in any one (1) **Day**; or five (5) **Days** in any one (1) week; provided, however, that upon application of any **Contractor**, the **Commissioner** shall have first certified to the Commissioner of Labor of the State of New York (hereinafter "Commissioner of Labor") that such public **Work** is of an important nature and that a delay in carrying it to completion would result in serious disadvantage to the public; and provided, further, that such Commissioner of Labor shall have determined that such an emergency does in fact exist as provided in Labor Law Section 220.2.

37.2.3 Failure of the **Commissioner** to make such a certification to the Commissioner of Labor shall not entitle the **Contractor** to damages for delay or for any cause whatsoever.

37.2.4 Prevailing Rate of Wages: The wages to be paid for a legal day's **Work** to laborers, workers, or mechanics employed upon the **Work** contemplated by this **Contract** or upon any materials to be used thereon shall not be less than the "prevailing rate of wage" as defined in Labor Law Section 220, and as fixed by the **Comptroller** in the attached Schedule of Wage Rates and in updated schedules thereof. The prevailing wage rates and supplemental benefits to be paid are those in effect at the time the **Work** is being performed.

37.2.5 Requests for interpretation or correction in the Information for Bidders includes all requests for clarification of the classification of trades to be employed in the performance of the **Work** under this **Contract**. In the event that a trade not listed in the **Contract** is in fact employed during the performance of this **Contract**, the **Contractor** shall be required to obtain from the **Agency** the prevailing wage rates and supplementary benefits for the trades used and to complete the performance of this **Contract** at the price at which the **Contract** was awarded.

37.2.6 Minimum Wages: Except for employees whose wage is required to be fixed pursuant to Labor Law Section 220, all persons employed by the **Contractor** and any **Subcontractor** in the manufacture or furnishing of the supplies, materials, or equipment, or the furnishing of work, labor, or services, used in the performance of this **Contract**, shall be paid, without subsequent deduction or rebate unless expressly authorized by **Law**, not less than the sum mandated by **Law**.

37.3 Working Conditions: No part of the **Work**, labor or services shall be performed or rendered by the **Contractor** in any plants, factories, buildings or surroundings or under working conditions which are unsanitary or hazardous or dangerous to the health and safety of employees engaged in the performance of this **Contract**. Compliance with the safety, sanitary, and factory inspection **Laws** of the state in which the **Work** is to be performed shall be prima facie evidence of compliance with this Article 37.3.

37.4 Prevailing Wage Enforcement: The **Contractor** agrees to pay for all costs incurred by the **City** in enforcing prevailing wage requirements, including the cost of any investigation conducted by or on behalf of the **Agency** or the **Comptroller,** where the **City** discovers a failure to comply with any of the requirements of this Article 37 by the **Contractor** or its **Subcontractor(s)**. The **Contractor** also agrees that, should it fail or refuse to pay for any such investigation, the **Agency** is hereby authorized to deduct from a **Contractor's** account an amount equal to the cost of such investigation.

37.4.1 The Labor Law Section 220 and Section 220-d, as amended, provide that this **Contract** shall be forfeited and no sum paid for any **Work** done hereunder on a second conviction for willfully paying less than:

37.4.1(a) The stipulated prevailing wage scale as provided in Labor Law section 220, as amended, or

37.4.1(b) The stipulated minimum hourly wage scale as provided in Labor Law section 220-d, as amended.

37.4.2 For any breach or violation of either working conditions (Article 37.3) or minimum wages (Article 37.2.6) provisions, the party responsible therefor shall be liable to the **City** for liquidated damages, which may be withheld from any amounts due on any contracts with the **City** of such party responsible, or may be recovered in actions brought by the **City**

Corporation Counsel in the name of the **City**, in addition to damages for any other breach of this **Contract**, for a sum equal to the amount of any underpayment of wages due to any employee engaged in the performance of this **Contract**. In addition, the **Commissioner** shall have the right to cancel contracts and enter into other contracts for the completion of the original contract, with or without public letting, and the original **Contractor** shall be liable for any additional cost. All sums withheld or recovered as deductions, rebates, refunds, or underpayment of wages hereunder, shall be held in a special deposit account and shall be paid without interest, on order of the **Comptroller**, directly to the employees who have been paid less than minimum rates of pay as set forth herein and on whose account such sums were withheld or recovered, provided that no claims by employees for such payments shall be entertained unless made within two (2) years from the date of actual notice to the **Contractor** of the withholding or recovery of such sums by the **City**.

37.4.3 A determination by the **Comptroller** that a **Contractor** and/or its **Subcontractor** willfully violated Labor Law Section 220 will be forwarded to the **City's** five District Attorneys for review.

37.4.4 The **Contractor's** or **Subcontractor's** noncompliance with this Article 37.4 and Labor Law Section 220 may result in an unsatisfactory performance evaluation and the **Comptroller** may also find and determine that the **Contractor** or **Subcontractor** willfully violated the New York Labor **Law**.

37.4.4(a) An unsatisfactory performance evaluation for noncompliance with this Article 37.4 may result in a determination that the **Contractor** is a non-responsible bidder on subsequent procurements with the **City** and thus a rejection of a future award of a contract with the **City**, as well as any other sanctions provided for by **Law**.

37.4.4(b) Labor Law Section 220-b, as amended, provides that when two (2) final determinations have been rendered against a **Contractor** or **Subcontractor** within any consecutive six (6) year period determining that such **Contractor** or **Subcontractor** has willfully failed to pay the prevailing rate of wages or to provide supplements in accordance with the Labor Law and this Article 37.4, whether such failures were concurrent or consecutive and whether or not such final determinations concerning separate public works projects are rendered simultaneously, such **Contractor** or **Subcontractor** shall be ineligible to submit a bid on or be awarded any public works contract with the **City** for a period of five (5) years from the second final determination. If the final determination involves the falsification of payroll records or the kickback of wages or supplements, the **Contractor** or **Subcontractor** shall be ineligible to submit a bid on or be awarded any public works contract with the **City** for a period of five (5) years from the first final determination.

37.4.4(c) Labor Law Section 220, as amended, provides that the **Contractor** or **Subcontractor** found to have violated this Article 37.4 may be directed to make payment of wages or supplements including interest found to be due, and the **Contractor** or **Subcontractor** may be directed to make payment of a further sum as a civil penalty in an amount not exceeding twenty-five (25%) percent of the total amount found to be due.

37.5 The **Contractor** and its **Subcontractors** shall within ten (10) **Days** after mailing of a Notice of Award or written order, post in prominent and conspicuous places in each and every plant, factory, building, and structure where employees of the **Contractor** and its **Subcontractors** engaged in the

performance of this **Contract** are employed, notices furnished by the **City**, in relation to prevailing wages and supplements, minimum wages, and other stipulations contained in Sections 220 and 220-h of the Labor Law, and the **Contractor** and its **Subcontractors** shall continue to keep such notices posted in such prominent and conspicuous places until **Final Acceptance** of the supplies, materials, equipment, or **Work**, labor, or services required to be furnished or rendered under this **Contract**.

37.6 The **Contractor** shall strictly comply with all of the provisions of Articles 37.6.1 through 37.6.5, and provide for all workers, laborers or mechanics in its employ, the following:

37.6.1 Notices Posted At **Site**: Post, in a location designated by the **City**, schedules of prevailing wages and supplements for this **Project**, a copy of all re-determinations of such schedules for the **Project**, the Workers' Compensation **Law** Section 51 notice, all other notices required by **Law** to be posted at the **Site**, the **City** notice that this **Project** is a public works project on which each worker is entitled to receive the prevailing wages and supplements for the occupation at which he or she is working, and all other notices which the **City** directs the **Contractor** to post. The **Contractor** shall provide a surface for such notices which is satisfactory to the **City**. The **Contractor** shall maintain and keep current such notices in a legible manner and shall replace any notice or schedule which is damaged, defaced, illegible or removed for any reason. The **Contractor** shall post such notices before commencing any **Work** on the **Site** and shall maintain such notices until all **Work** on the **Site** is complete; and

37.6.2 Daily **Site** Sign-in Sheets: Maintain daily **Site** sign-in sheets, and require that **Subcontractors** maintain daily **Site** sign-in sheets for its employees, which include blank spaces for an employee's name to be both printed and signed, job title, date started and Social Security number, the time the employee began work and the time the employee left work, until **Final Acceptance** of the supplies, materials, equipment, or **Work**, labor, or services to be furnished or rendered under this **Contract** unless exception is granted by the **Comptroller** upon application by the **Agency**. In the alternative, subject to the approval of the **CCPO**, the **Contractor** and **Subcontractor** may maintain an electronic or biometric sign-in system, which provides the information required by this Article 37.6.2; and

37.6.3 Individual Employee Information Notices: Distribute a notice to each worker, laborer or mechanic employed under this **Contract**, in a form provided by the **Agency**, that this **Project** is a public works project on which each worker, laborer or mechanic is entitled to receive the prevailing rate of wages and supplements for the occupation at which he or she is working. If the total cost of the **Work** under this **Contract** is at least two hundred fifty thousand ($250,000) dollars, such notice shall also include a statement that each worker, laborer or mechanic must be certified prior to performing any **Work** as having successfully completed a course in construction safety and health approved by the United States Department of Labor's Occupational Safety and Health Administration that is at least ten (10) hours in duration. Such notice shall be distributed to each worker before he or she starts performing any **Work** of this **Contract** and with the first paycheck after July first of each year. "Worker, laborer or mechanic" includes employees of the **Contractor** and all **Subcontractors** and all employees of suppliers entering the **Site**. At the time of distribution, the **Contractor** shall have each worker, laborer or mechanic sign a statement, in a form provided by the **Agency**, certifying that the worker has received the notice required by this Article 37.6.3, which signed statement shall be maintained with the payroll records required by this **Contract**; and

37.6.3(a) The **Contractor** and each **Subcontractor** shall notify each worker, laborer or mechanic employed under this **Contract** in writing of the prevailing rate of

wages for their particular job classification. Such notification shall be given to every worker, laborer, and mechanic on their first pay stub and with every pay stub thereafter; and

37.6.4 **Site** Laminated Identification Badges: The **Contractor** shall provide laminated identification badges which include a photograph of the worker's, laborer's or mechanic's face and indicate the worker's, laborer's or mechanic's name, trade, employer's name, and employment starting date (month/day/year). Further, the **Contractor** shall require as a condition of employment on the **Site**, that each and every worker, laborer or mechanic wear the laminated identification badge at all times and that it may be seen by any representative of the **City**. The **Commissioner** may grant a written waiver from the requirement that the laminated identification badge include a photograph if the **Contractor** demonstrates that the identity of an individual wearing a laminated identification badge can be easily verified by another method; and

37.6.5 Language Other Than English Used On **Site**: Provide the **ACCO** notice when three (3) or more employees (worker and/or laborer and/or mechanic) on the **Site**, at any time, speak a language other than English. The **ACCO** will then provide the **Contractor** the notices described in Article 37.6.1 in that language or languages as may be required. The **Contractor** is responsible for all distributions under this Article 37; and

37.6.6 Provision of Records: The **Contractor** and **Subcontractor(s)** shall produce within five (5) **Days** on the **Site** of the **Work** and upon a written order of the **Engineer**, the **Commissioner**, the **ACCO**, the **Agency EAO**, or the **Comptroller,** such records as are required to be kept by this Article 37.6; and

37.6.7 The **Contractor** and **Subcontractor(s)** shall pay employees by check or direct deposit. If this **Contract** is for an amount greater than one million ($1,000,000) dollars, checks issued by the **Contractor** to covered employees shall be generated by a payroll service or automated payroll system (an in-house system may be used if approved by the **Agency**). For any subcontract for an amount greater than seven hundred fifty thousand ($750,000) dollars, checks issued by a **Subcontractor** to covered employees shall be generated by a payroll service or automated payroll system (an in-house system may be used if approved by the **Agency**); and

37.6.8 The failure of the **Contractor** or **Subcontractor(s)** to comply with the provisions of Articles 37.6.1 through 37.6.7 may result in the **Commissioner** declaring the **Contractor** in default and/or the withholding of payments otherwise due under the **Contract**.

37.7 The **Contractor** and its **Subcontractors** shall keep such employment and payroll records as are required by Section 220 of the Labor Law. The failure of the **Contractor** or **Subcontractor(s)** to comply with the provisions of this Article 37.7 may result in the **Commissioner** declaring the **Contractor** in default and/or the withholding of payments otherwise due under the **Contract.**

37.8 At the time the **Contractor** makes application for each partial payment and for final payment, the **Contractor** shall submit to the **Commissioner** a written payroll certification, in the form provided by this **Contract**, of compliance with the prevailing wage, minimum wage, and other provisions and stipulations required by Labor Law Section 220 and of compliance with the training requirements of Labor Law Section 220-h set forth in Article 35.2. This certification of compliance shall be a condition precedent to payment and no payment shall be made to the **Contractor** unless and until each such certification shall have been submitted to and received by the **Commissioner**.

37.9 This **Contract** is executed by the **Contractor** with the express warranty and representation that the **Contractor** is not disqualified under the provisions of Section 220 of the Labor Law from the award of the **Contract**.

37.10 Any breach or violation of any of the foregoing shall be deemed a breach or violation of a material provision of this **Contract**, and grounds for cancellation thereof by the **City**.

ARTICLE 38. PAYROLL REPORTS

38.1 The **Contractor** and its **Subcontractor(s)** shall maintain on the **Site** during the performance of the **Work** the original payrolls or transcripts thereof which the **Contractor** and its **Subcontractor(s)** are required to maintain and shall submit such original payrolls or transcripts, subscribed and affirmed by it as true, within thirty (30) **Days** after issuance of its first payroll, and every thirty (30) **Days** thereafter, pursuant to Labor Law Section 220(3-a)(a)(iii). The **Contractor** and **Subcontractor(s)** shall submit such original payrolls or transcripts along with each and every payment requisition. If payment requisitions are not submitted at least once a month, the **Contractor** and its **Subcontractor(s)** shall submit original payrolls and transcripts both along with its payment requisitions and independently of its payment requisitions.

38.2 The **Contractor** shall maintain payrolls or transcripts thereof for six (6) years from the date of completion of the **Work** on this **Contract**. If such payrolls and transcripts are maintained outside of New York City after the completion of the **Work** and their production is required pursuant to this Article 38, the **Contractor** shall produce such records in New York City upon request by the City.

38.3 The **Contractor** and **Subcontractor(s)** shall comply with any written order, direction, or request made by the **Engineer**, the **Commissioner**, the **ACCO**, the **Agency EAO**, the **Agency Labor Law Investigator(s)**, or the **Comptroller**, to provide to the requesting party any of the following information and/or records within five (5) **Days** of such written order, direction, or request:

38.3.1 Such original payrolls or transcripts thereof subscribed and affirmed by it as true and the statements signed by each worker pursuant to this Chapter VIII; and/or

38.3.2 Attendance sheets for each **Day** on which any employee of the **Contractor** and/or any of the **Subcontractor(s)** performed **Work** on the **Site**, which attendance sheet shall be in a form acceptable to the **Agency** and shall provide information acceptable to the **Agency** to identify each such employee; and/or

38.3.3 Any other information to satisfy the **Engineer**, the **Commissioner**, the **ACCO**, the **Agency EAO**, the **Agency Labor Law Investigator(s)** or the **Comptroller**, that this Chapter VIII and the Labor Law, as to the hours of employment and prevailing rates of wages and/or supplemental benefits, are being observed.

38.4 The failure of the **Contractor** or **Subcontractor(s)** to comply with the provisions of Articles 38.1 and/or 38.2 may result in the **Commissioner** declaring the **Contractor** in default and/or the withholding of payments otherwise due under the **Contract**.

ARTICLE 39. DUST HAZARDS

39.1 Should a harmful dust hazard be created in performing the **Work** of this **Contract**, for the elimination of which appliances or methods have been approved by the Board of Standards and Appeals

of the City of New York, such appliances and methods shall be installed, maintained, and effectively operated during the continuance of such harmful dust hazard. Failure to comply with this provision after notice shall make this **Contract** voidable at the sole discretion of the **City**.

CHAPTER IX: PARTIAL AND FINAL PAYMENTS

ARTICLE 40. CONTRACT PRICE

40.1 The **City** shall pay, and the **Contractor** agrees to accept, in full consideration for the **Contractor's** performance of the **Work** subject to the terms and conditions hereof, the lump sum price or unit prices for which this **Contract** was awarded, plus the amount required to be paid for any **Extra Work** ordered by the **Commissioner** under Article 25, less credit for any **Work** omitted pursuant to Article 29.

ARTICLE 41. BID BREAKDOWN ON LUMP SUM

41.1 Within fifteen (15) **Days** after the commencement date specified in the **Notice to Proceed** or **Order to Work**, unless otherwise directed by the **Resident Engineer**, the **Contractor** shall submit to the **Resident Engineer** a breakdown of its bid price, or of lump sums bid for items of the **Contract**, showing the various operations to be performed under the **Contract**, as directed in the progress schedule required under Article 9, and the value of each of such operations, the total of such items to equal the lump sum price bid. Said breakdown must be approved in writing by the **Resident Engineer**.

41.2 No partial payment will be approved until the **Contractor** submits a bid breakdown that is acceptable to the **Resident Engineer**.

41.3 The **Contractor** shall also submit such other information relating to the bid breakdown as directed by the **Resident Engineer**. Thereafter, the breakdown may be used only for checking the **Contractor's** applications for partial payments hereunder, but shall not be binding upon the **City**, the **Commissioner**, or the **Engineer** for any purpose whatsoever.

ARTICLE 42. PARTIAL PAYMENTS

42.1 From time to time as the **Work** progresses satisfactorily, but not more often than once each calendar month (except where the **Commissioner** approves in writing the submission of invoices on a more frequent basis and for invoices relating to **Work** performed pursuant to a change order), the **Contractor** may submit to the **Engineer** a requisition for a partial payment in the prescribed form, which shall contain an estimate of the quantity and the fair value of the **Work** done during the payment period.

42.2 Partial payments may be made for materials, fixtures, and equipment in advance of their actual incorporation in the **Work**, as the **Commissioner** may approve, and upon the terms and conditions set forth in the General Conditions.

42.3 The **Contractor** shall also submit to the **Commissioner** in connection with every application for partial payment a verified statement in the form prescribed by the **Comptroller** setting forth the information required under Labor Law Section 220-a.

42.4 Within thirty (30) **Days** after receipt of a satisfactory payment application, and within sixty (60) **Days** after receipt of a satisfactory payment application in relation to **Work** performed pursuant to a change order, the **Engineer** will prepare and certify, and the **Commissioner** will approve, a voucher for a partial payment in the amount of such approved estimate, less any and all deductions authorized to be made by the **Commissioner** under the terms of this **Contract** or by **Law**.

ARTICLE 43. PROMPT PAYMENT

43.1 The Prompt Payment provisions of the **PPB** Rules in effect at the time of the bid will be applicable to payments made under this **Contract**. The provisions require the payment to the **Contractor** of interest on payments made after the required payment date, except as set forth in the **PPB** Rules.

43.2 The **Contractor** shall submit a proper invoice to receive payment, except where the **Contract** provides that the **Contractor** will be paid at predetermined intervals without having to submit an invoice for each scheduled payment.

43.3 Determination of interest due will be made in accordance with the **PPB** Rules.

43.4 If the **Contractor** is paid interest, the proportionate share(s) of that interest shall be forwarded by the **Contractor** to its **Subcontractor(s)**.

43.5 The **Contractor** shall pay each **Subcontractor** or **Materialman** not later than seven (7) **Days** after receipt of payment out of amounts paid to the **Contractor** by the **City** for **Work** performed by the **Subcontractor** or **Materialman** under this **Contract**.

> 43.5.1 If **Contractor** fails to make any payment to any **Subcontractor** or **Materialman** within seven (7) **Days** after receipt of payment by the **City** pursuant to this Article 43.5, then the **Contractor** shall pay interest on amounts due to such **Subcontractor** or **Materialman** at the rate of interest in effect on the date such payment is made by the **Contractor** computed in accordance with Section 756-b (1)(b) of the New York General Business Law. Accrual of interest shall commence on the **Day** immediately following the expiration of the seventh **Day** following receipt of payment by the **Contractor** from the **City** and shall end on the date on which payment is made.

43.6 The **Contractor** shall include in each of its subcontracts a provision requiring each **Subcontractor** to make payment to each of its **Subcontractors** or **Materialmen** for **Work** performed under this **Contract** in the same manner and within the same time period set forth above.

ARTICLE 44. SUBSTANTIAL COMPLETION PAYMENT

44.1 The **Contractor** shall submit with the **Substantial Completion** requisition:

> 44.1.1 A final verified statement of any pending Article 27 disputes in accordance with the **PPB** Rules and this **Contract** and any and all alleged claims against the **City**, in any way connected with or arising out of this **Contract** (including those as to which details may have been furnished pursuant to Articles 11, 27, 28, and 30) setting forth with respect to each such claim the total amount thereof, the various items of labor and materials included therein, and the alleged value of each item; and if the alleged claim be one for delay, the alleged cause of each such delay, the period or periods of time, giving the dates when the

Contractor claims the performance of the **Work** or a particular part thereof was delayed, and an itemized statement and breakdown of the amount claimed for each such delay.

44.1.1(a) With respect to each such claim, the **Commissioner**, the **Comptroller** and, in the event of litigation, the **City** Corporation Counsel shall have the same right to inspect, and to make extracts or copies of, the **Contractor's** books, vouchers, records, etc., as is referred to in Articles 11, 27, 28, and 30. Nothing contained in this Article 44.1.1(a) is intended to or shall relieve the **Contractor** from the obligation of complying strictly with Articles 11, 27, 28, and 30. The **Contractor** is warned that unless such claims are completely set forth as herein required, the **Contractor** upon acceptance of the **Substantial Completion** payment pursuant to this Article 44, will have waived any such claims.

44.1.2 A **Final Approved Punch List**.

44.1.3 Where required, a request for an extension of time to achieve **Substantial Completion** or final extension of time.

44.2 The **Commissioner** shall issue a voucher calling for payment of any part or all of the balance due for **Work** performed under the **Contract**, including monies retained under Article 21, less any and all deductions authorized to be made by the **Commissioner**, under this **Contract** or by **Law**, and less twice the amount the **Commissioner** considers necessary to ensure the completion of the balance of the **Work** by the **Contractor**. Such a payment shall be considered a partial and not a final payment. No **Substantial Completion** payment shall be made under this Article 44 where the **Contractor** failed to complete the **Work** within the time fixed for such completion in the Schedule A of the General Conditions, or within the time to which completion may have been extended, until an extension or extensions of time for the completion of **Work** have been acted upon pursuant to Article 13.

44.3 No further partial payments shall be made to the **Contractor** after **Substantial Completion**, except the **Substantial Completion** payment and payment pursuant to any **Contractor's** requisition that were properly filed with the **Commissioner** prior to the date of **Substantial Completion**; however, the **Commissioner** may grant a waiver for further partial payments after the date of **Substantial Completion** to permit payments for change order **Work** and/or release of retainage and deposits pursuant to Articles 21 and 24. Such waiver shall be in writing.

44.4 The **Contractor** acknowledges that nothing contained in this Article 44 is intended to or shall in any way diminish the force and effect of Article 13.

ARTICLE 45. FINAL PAYMENT

45.1 After completion and **Final Acceptance** of the **Work**, the **Contractor** shall submit all required certificates and documents, together with a requisition for the balance claimed to be due under the **Contract**, less the amount authorized to be retained for maintenance under Article 24. Such submission shall be within 90 days of the date of the **Commissioner's** written determination of **Final Acceptance**, or within such additional time as may be granted by the **Commissioner** in writing. If the **Contractor** fails to submit all required certificates and documents within the time allowed, no payment of the balance claimed shall be made to the **Contractor** and the **Contractor** shall be deemed to have forfeited its right to payment of any balance claimed. A verified statement similar to that required in connection with applications for partial payments shall also be submitted to the **Commissioner**.

45.2 Amended Verified Statement of Claims: The **Contractor** shall also submit with the final requisition any amendments to the final verified statement of any pending dispute resolution procedures in accordance with the **PPB** Rules and this **Contract** and any and all alleged claims against the **City**, in any way connected with or arising out of this **Contract** (including those as to which details may have been furnished pursuant to Articles 11, 27, 28, and 30) that have occurred subsequent to **Substantial Completion**, setting forth with respect to each such claim the total amount thereof, the various items of labor and materials included therein, and the alleged value of each such item; and if the alleged claim be one for delay, the alleged cause of each such delay, the period or periods of time, giving the dates when the **Contractor** claims the performance of the **Work** or a particular part thereof was delayed, and an itemized statement and breakdown of the amount claimed for each such delay. With reference to each such claim, the **Commissioner**, the **Comptroller** and, in the event of litigation, the **City** Corporation Counsel shall have the same right to inspect, and to make extracts or copies of, the **Contractor's** books, vouchers, records, etc., as is referred to in Articles 11, 27, 28, and 30. Nothing contained in this Article 45.2, is intended to or shall relieve the **Contractor** from the obligation of complying strictly with Articles 11, 27, 28, and 30. The **Contractor** is warned that unless such claims are completely set forth as herein required, the **Contractor**, upon acceptance of the Final Payment pursuant to Article 46, will have waived any such claims.

45.3 Preparation of Final Voucher: Upon determining the balance due hereunder other than on account of claims, the **Engineer** will prepare and certify, for the Commissioner's approval, a voucher for final payment in that amount less any and all deductions authorized to be made by the **Commissioner** under this **Contract** or by **Law**. In the case of a lump sum **Contract**, the **Commissioner** shall certify the voucher for final payment within thirty (30) **Days** from the date of completion and acceptance of the **Work**, provided all requests for extensions of time have been acted upon.

45.3.1 All prior certificates and vouchers upon which partial payments were made, being merely estimates made to enable the **Contractor** to prosecute the **Work** more advantageously, shall be subject to correction in the final voucher, and the certification of the **Engineer** thereon and the approval of the **Commissioner** thereof, shall be conditions precedent to the right of the **Contractor** to receive any money hereunder. Such final voucher shall be binding and conclusive upon the **Contractor**.

45.3.2 Payment pursuant to such final voucher, less any deductions authorized to be made by the **Commissioner** under this **Contract** or by **Law**, shall constitute the final payment, and shall be made by the **Comptroller** within thirty (30) **Days** after the filing of such voucher in his/her office.

45.4 The **Contractor** acknowledges that nothing contained in this Article 45 is intended to or shall in any way diminish the force and effect of Article 13.

ARTICLE 46. ACCEPTANCE OF FINAL PAYMENT

46.1 The acceptance by the **Contractor**, or by anyone claiming by or through it, of the final payment, whether such payment be made pursuant to any judgment of any court, or otherwise, shall constitute and operate as a release of the **City** from any and all claims of and liability to the **Contractor** for anything heretofore done or furnished for the **Contractor** relating to or arising out of this **Contract** and the **Work** done hereunder, and for any prior act, neglect or default on the part of the **City** or any of its officials, agents or employees, excepting only a claim against the **City** for the amounts deducted or retained in accordance with the terms and provisions of this **Contract** or by **Law**, and excepting any claims, not otherwise waived, or any pending dispute resolution procedures which are contained in the

verified statement filed with the **Contractor's** substantial and final requisitions pursuant to Articles 44 and 45.

46.2 The **Contractor** is warned that the execution by it of a release, in connection with the acceptance of the final payment, containing language purporting to reserve claims other than those herein specifically excepted from the operation of this Article 46, or those for amounts deducted by the **Commissioner** from the final requisition or from the final payment as certified by the **Engineer** and approved by the **Commissioner**, shall not be effective to reserve such claims, anything stated to the **Contractor** orally or in writing by any official, agent or employee of the **City** to the contrary notwithstanding.

46.3 Should the **Contractor** refuse to accept the final payment as tendered by the **Comptroller**, it shall constitute a waiver of any right to interest thereon.

46.4 The **Contractor**, however, shall not be barred by this Article 46 from commencing an action for breach of **Contract** to the extent permitted by **Law** and by the terms of the **Contract** for any claims that are contained in the verified statement filed with the **Contractor's** substantial and final requisitions pursuant to Articles 44 and 45 or that arose after submission of the final payment requisition, provided that a detailed and verified statement of claim is served upon the contracting **Agency** and **Comptroller** not later than forty (40) **Days** after the making of such final payment by electronic funds transfer (EFT) or the mailing of such final payment. The statement shall specify the items upon which the claim will be based and any such claim shall be limited to such items.

ARTICLE 47. APPROVAL BY PUBLIC DESIGN COMMISSION

47.1 All works of art, including paintings, mural decorations, stained glass, statues, bas-reliefs, and other sculptures, monuments, fountains, arches, and other structures of a permanent character intended for ornament or commemoration, and every design of the same to be used in the performance of this **Contract**, and the design of all bridges, approaches, buildings, gates, fences, lamps, or structures to be erected, pursuant to the terms of this **Contract**, shall be submitted to the Art Commission, d/b/a the Public Design Commission of the City of New York, and shall be approved by the Public Design Commission prior to the erection or placing in position of the same. The final payment shall not become due or payable under this **Contract** unless and until the Public Design Commission shall certify that the design for the **Work** herein contracted for has been approved by the said Public Design Commission, and that the same has been executed in substantial accordance with the design so approved, pursuant to the provisions of Chapter 37, Section 854 of the **City** Charter, as amended.

CHAPTER X: CONTRACTOR'S DEFAULT

ARTICLE 48. COMMISSIONER'S RIGHT TO DECLARE CONTRACTOR IN DEFAULT

48.1 In addition to those instances specifically referred to in other Articles herein, the **Commissioner** shall have the right to declare the **Contractor** in default of this **Contract** if:

48.1.1 The **Contractor** fails to commence **Work** when notified to do so by the **Commissioner**; or if

48.1.2 The **Contractor** shall abandon the **Work**; or if

48.1.3 The **Contractor** shall refuse to proceed with the **Work** when and as directed by the **Commissioner**; or if

48.1.4 The **Contractor** shall, without just cause, reduce its working force to a number which, if maintained, would be insufficient, in the opinion of the **Commissioner**, to complete the **Work** in accordance with the progress schedule; or if

48.1.5 The **Contractor** shall fail or refuse to increase sufficiently such working force when ordered to do so by the **Commissioner**; or if

48.1.6 The **Contractor** shall sublet, assign, transfer, convert or otherwise dispose of this **Contract** other than as herein specified; or sell or assign a majority interest in the **Contractor**; or if

48.1.7 The **Contractor** fails to secure and maintain all required insurance; or if

48.1.8 A receiver or receivers are appointed to take charge of the **Contractor's** property or affairs; or if

48.1.9 The **Commissioner** shall be of the opinion that the **Contractor** is or has been unnecessarily or unreasonably or willfully delaying the performance and completion of the **Work**, or the award of necessary subcontracts, or the placing of necessary material and equipment orders; or if

48.1.10 The **Commissioner** shall be of the opinion that the **Contractor** is or has been willfully or in bad faith violating any of the provisions of this **Contract**; or if

48.1.11 The **Commissioner** shall be of the opinion that the **Work** cannot be completed within the time herein provided therefor or within the time to which such completion may have been extended; provided, however, that the impossibility of timely completion is, in the **Commissioner's** opinion, attributable to conditions within the **Contractor's** control; or if

48.1.12 The **Work** is not completed within the time herein provided therefor or within the time to which the **Contractor** may be entitled to have such completion extended; or if

48.1.13 Any statement or representation of the **Contractor** in the **Contract** or in any document submitted by the **Contractor** with respect to the **Work**, the **Project**, or the **Contract** (or for purposes of securing the **Contract**) was untrue or incorrect when made; or if

48.1.14 The **Contractor** or any of its officers, directors, partners, five (5%) percent shareholders, principals, or other persons substantially involved in its activities, commits any of the acts or omissions specified as the grounds for debarment in the **PPB** Rules.

48.2 Before the **Commissioner** shall exercise his/her right to declare the **Contractor** in default, the **Commissioner** shall give the **Contractor** an opportunity to be heard, upon not less than two (2) **Days**' notice.

ARTICLE 49. EXERCISE OF THE RIGHT TO DECLARE DEFAULT

49.1 The right to declare the **Contractor** in default for any of the grounds specified or referred to in Article 48 shall be exercised by sending the **Contractor** a notice, signed by the **Commissioner**, setting forth the ground or grounds upon which such default is declared (hereinafter referred to as a "Notice of Default").

49.2 The **Commissioner's** determination that the **Contractor** is in default shall be conclusive, final, and binding on the parties and such a finding shall preclude the **Contractor** from commencing a plenary action for any damages relating to the **Contract**. If the **Contractor** protests the determination of the **Commissioner**, the **Contractor** may commence an action in a court of competent jurisdiction of the State of New York under Article 78 of the New York Civil Practice Law and Rules.

ARTICLE 50. QUITTING THE SITE

50.1 Upon receipt of such notice the **Contractor** shall immediately discontinue all further operations under this **Contract** and shall immediately quit the **Site**, leaving untouched all plant, materials, equipment, tools, and supplies then on the **Site**.

ARTICLE 51. COMPLETION OF THE WORK

51.1 The **Commissioner**, after declaring the **Contractor** in default, may then have the **Work** completed by such means and in such manner, by contract with or without public letting, or otherwise, as he/she may deem advisable, utilizing for such purpose such of the **Contractor's** plant, materials, equipment, tools, and supplies remaining on the **Site**, and also such **Subcontractors**, as he/she may deem advisable.

51.2 After such completion, the **Commissioner** shall make a certificate stating the expense incurred in such completion, which shall include the cost of re-letting and also the total amount of liquidated damages (at the rate provided for in the **Contract**) from the date when the **Work** should have been completed by the **Contractor** in accordance with the terms hereof to the date of actual completion of the **Work**. Such certificate shall be binding and conclusive upon the **Contractor**, its sureties, and any person claiming under the **Contractor**, as to the amount thereof.

51.3 The expense of such completion, including any and all related and incidental costs, as so certified by the **Commissioner**, and any liquidated damages assessed against the **Contractor**, shall be charged against and deducted out of monies which are earned by the **Contractor** prior to the date of default. Should the expense of such completion, as certified by the **Commissioner**, exceed the total sum which would have been payable under the **Contract** if it had been completed by the **Contractor**, any excess shall be paid by the **Contractor**.

ARTICLE 52. PARTIAL DEFAULT

52.1 In case the **Commissioner** shall declare the **Contractor** in default as to a part of the **Work** only, the **Contractor** shall discontinue such part, shall continue performing the remainder of the **Work** in strict conformity with the terms of this **Contract**, and shall in no way hinder or interfere with any **Other Contractor(s)** or persons whom the **Commissioner** may engage to complete the **Work** as to which the **Contractor** was declared in default.

52.2 The provisions of this Chapter relating to declaring the **Contractor** in default as to the entire **Work** shall be equally applicable to a declaration of partial default, except that the **Commissioner** shall be entitled to utilize for completion of the part of the **Work** as to which the **Contractor** was declared in default only such plant, materials, equipment, tools, and supplies as had been previously used by the **Contractor** on such part.

ARTICLE 53. PERFORMANCE OF UNCOMPLETED WORK

53.1 In completing the whole or any part of the **Work** under the provisions of this Chapter X, the **Commissioner** shall have the power to depart from or change or vary the terms and provisions of this **Contract**, provided, however, that such departure, change or variation is made for the purpose of reducing the time or expense of such completion. Such departure, change or variation, even to the extent of accepting a lesser or different performance, shall not affect the conclusiveness of the **Commissioner's** certificate of the cost of completion referred to in Article 51, nor shall it constitute a defense to an action to recover the amount by which such certificate exceeds the amount which would have been payable to the **Contractor** hereunder but for its default.

ARTICLE 54. OTHER REMEDIES

54.1 In addition to the right to declare the **Contractor** in default pursuant to this Chapter X, the **Commissioner** shall have the absolute right, in his/her sole discretion and without a hearing, to complete or cause to be completed in the same manner as described in Articles 51 and 53, any or all unsatisfactory or uncompleted punch list **Work** that remains after the completion date specified in the **Final Approved Punch List**. A written notice of the exercise of this right shall be sent to the **Contractor** who shall immediately quit the **Site** in accordance with the provisions of Article 50.

54.2 The expense of completion permitted under Article 54.1, including any and all related and incidental costs, as so certified by the **Commissioner**, shall be charged against and deducted out of monies which have been earned by the **Contractor** prior to the date of the exercise of the right set forth in Article 54.1; the balance of such monies, if any, subject to the other provisions of this **Contract**, to be paid to the **Contractor** without interest after such completion. Should the expense of such completion, as certified by the **Commissioner**, exceed the total sum which would have been payable under the **Contract** if it had been completed by the **Contractor**, any excess shall be paid by the **Contractor**.

54.3 The previous provisions of this Chapter X shall be in addition to any and all other remedies available under **Law** or in equity.

54.4 The exercise by the **City** of any remedy set forth herein shall not be deemed a waiver by the **City** of any other legal or equitable remedy contained in this **Contract** or provided under **Law**.

CHAPTER XI: MISCELLANEOUS PROVISIONS

ARTICLE 55. CONTRACTOR'S WARRANTIES

55.1 In consideration of, and to induce, the award of this **Contract** to the **Contractor**, the **Contractor** represents and warrants:

55.1.1 That it is financially solvent, sufficiently experienced and competent to perform the **Work**; and

55.1.2 That the facts stated in its bid and the information given by it pursuant to the Information for Bidders is true and correct in all respects; and

55.1.3 That it has read and complied with all requirements set forth in the **Contract**.

ARTICLE 56. CLAIMS AND ACTIONS THEREON

56.1 Any claim, that is not subject to dispute resolution under the **PPB** Rules or this **Contract**, against the **City** for damages for breach of **Contract** shall not be made or asserted in any action, unless the **Contractor** shall have strictly complied with all requirements relating to the giving of notice and of information with respect to such claims, as herein before provided.

56.2 Nor shall any action be instituted or maintained on any such claims unless such action is commenced within six (6) months after **Substantial Completion**; except that:

56.2.1 Any claims arising out of events occurring after **Substantial Completion** and before **Final Acceptance** of the **Work** shall be asserted within six (6) months of **Final Acceptance** of the **Work**;

56.2.2 If the **Commissioner** exercises his/her right to complete or cause to complete any or all unsatisfactory or uncompleted punch list **Work** that remains after the completion date specified in the **Final Approved Punch List** pursuant to Article 54, any such action shall be commenced within six (6) months from the date the **Commissioner** notifies the **Contractor** in writing that he/she has exercised such right. Any claims for monies deducted, retained or withheld under the provisions of this **Contract** shall be asserted within six (6) months after the date when such monies otherwise become due and payable hereunder; and

56.2.3 If the **Commissioner** exercises his/her right to terminate the **Contract** pursuant to Article 64, any such action shall be commenced within six (6) months of the date the **Commissioner** exercises said right.

ARTICLE 57. INFRINGEMENT

57.1 The **Contractor** shall be solely responsible for and shall defend, indemnify, and hold the **City** harmless from any and all claims (even if the allegations of the lawsuit are without merit) and judgments for damages and from costs and expenses to which the **City** may be subject to or which it may suffer or incur allegedly arising out of or in connection with any infringement by the **Contractor** of any copyright, trade secrets, trademark or patent rights or any other property or personal right of any third party by the **Contractor** and/or its **Subcontractors** in the performance or completion of the **Work**. Insofar as the facts or **Law** relating to any claim would preclude the **City** from being completely indemnified by the **Contractor**, the **City** shall be partially indemnified by the **Contractor** to the fullest extent permitted by **Law**.

ARTICLE 58. NO CLAIM AGAINST OFFICIALS, AGENTS OR EMPLOYEES

58.1 No claim whatsoever shall be made by the **Contractor** against any official, agent or employee of the **City** for, or on account of, anything done or omitted to be done in connection with this **Contract**.

ARTICLE 59. SERVICE OF NOTICES

59.1 The **Contractor** hereby designates the business address, fax number, and email address specified in its bid, as the place where all notices, directions or other communications to the **Contractor** may be delivered, or to which they may be mailed. Any notice, direction, or communication from either party to the other shall be in writing and shall be deemed to have been given when (i) delivered personally; (ii) sent by certified mail, return receipt requested; (iii) delivered by overnight or same day courier service in a properly addressed envelope with confirmation; or (iv) sent by fax or email and, unless receipt of the fax or e-mail is acknowledged by the recipient by fax or e-mail, deposited in a post office box regularly maintained by the United States Postal Service in a properly addressed, postage pre-paid envelope.

59.2 **Contractor's** notice address, email address, or fax number may be changed at any time by an instrument in writing, executed and acknowledged by the **Contractor**, and delivered to the **Commissioner**.

59.3 Nothing herein contained shall, however, be deemed to preclude or render inoperative the service of any notice, direction or other communication upon the **Contractor** personally, or, if the **Contractor** is a corporation, upon any officer thereof.

ARTICLE 60. UNLAWFUL PROVISIONS DEEMED STRICKEN FROM CONTRACT

60.1 If this **Contract** contains any unlawful provision not an essential part of the **Contract** and which shall not appear to have been a controlling or material inducement to the making thereof, the same shall be deemed of no effect and shall, upon notice by either party, be deemed stricken from the **Contract** without affecting the binding force of the remainder.

ARTICLE 61. ALL LEGAL PROVISIONS DEEMED INCLUDED

61.1 It is the intent and understanding of the parties to this **Contract** that each and every provision of **Law** required to be inserted in this **Contract** shall be and is inserted herein. Furthermore, it is hereby stipulated that every such provision is to be deemed to be inserted herein, and if, through mistake or otherwise, any such provision is not inserted, or is not inserted in correct form, then this **Contract** shall forthwith upon the application of either party be amended by such insertion so as to comply strictly with the **Law** and without prejudice to the rights of either party hereunder.

ARTICLE 62. TAX EXEMPTION

62.1 The **City** is exempt from payment of Federal, State, and local taxes, including sales and compensating use taxes of the State of New York and its cities and counties on all tangible personal property sold to the **City** pursuant to the provisions of this **Contract**. These taxes are not to be included in bids. However, this exemption does not apply to tools, machinery, equipment or other property leased by or to the **Contractor**, **Subcontractor** or **Materialman** or to tangible personal property which, even

though it is consumed, is not incorporated into the completed **Work** (consumable supplies) and tangible personal property that the **Contractor** is required to remove from the **Site** during or upon completion of the **Work**. The **Contractor** and its **Subcontractors** and **Materialmen** shall be responsible for and pay any and all applicable taxes, including sales and compensating use taxes, on such leased tools, machinery, equipment or other property and upon all such consumable supplies and tangible personal property that the **Contractor** is required to remove from the **Site** during or upon completion of the **Work**.

62.2 The **Contractor** agrees to sell and the **City** agrees to purchase all tangible personal property, other than consumable supplies and other tangible personal property that the **Contractor** is required to remove from the **Site** during or upon completion of the **Work**, that is required, necessary or proper for or incidental to the construction of the **Project** covered by this **Contract**. The sum paid under this **Contract** for such tangible personal property shall be in full payment and consideration for the sale of such tangible personal property.

62.2.1 The **Contractor** agrees to construct the **Project** and to perform all **Work**, labor and services rendered, necessary, proper or incidental thereto for the sum shown in the bid for the performance of such **Work**, labor, and services, and the sum so paid pursuant to this **Contract** for such **Work**, labor, and services, shall be in full consideration for the performance by the **Contractor** of all its duties and obligations under this **Contract** in connection with said **Work,** labor, and services.

62.3 20 NYCRR Section 541.3(d) provides that a **Contractor**'s purchases of tangible personal property that is either incorporated into real property owned by a governmental entity or purchased for and sold to a governmental entity are exempt from sales and use tax. The **City** shall not pay sales tax for any such tangible personal property that it purchases from the **Contractor** pursuant to the **Contract.** With respect to such tangible personal property, the **Contractor**, at the request of the **City**, shall furnish to the **City** such bills of sale and other instruments as may be required by the **City**, properly executed, acknowledged and delivered assuring to the **City** title to such tangible personal property, free of liens and/or encumbrances, and the **Contractor** shall mark or otherwise identify all such tangible personal property as the property of the **City**.

62.4 Title to all tangible personal property to be sold by the **Contractor** to the **City** pursuant to the provisions of the **Contract** shall immediately vest in and become the sole property of the **City** upon delivery of such tangible personal property to the **Site**. Notwithstanding such transfer of title, the **Contractor** shall have the full and continuing responsibility to install such tangible personal property in accordance with the provisions of this **Contract**, protect it, maintain it in a proper condition and forthwith repair, replace and make good any damage thereto, theft or disappearance thereof, and furnish additional tangible personal property in place of any that may be lost, stolen or rendered unusable, without cost to the **City**, until such time as the **Work** covered by the **Contract** is fully accepted by the **City**. Such transfer of title shall in no way affect any of the **Contractor's** obligations hereunder. In the event that, after title has passed to the **City**, any of the tangible personal property is rejected as being defective or otherwise unsatisfactory, title to all such tangible personal property shall be deemed to have been transferred back to the **Contractor**.

62.5 The purchase by **Subcontractors** or **Materialmen** of tangible personal property to be sold hereunder shall be a purchase or procurement for resale to the **Contractor** (either directly or through other **Subcontractors**) and therefore not subject to the aforesaid sales and compensating use taxes, provided that the subcontracts and purchase agreements provide for the resale of such tangible personal property and that such subcontracts and purchase agreements are in a form similar to this **Contract** with respect to the separation of the sale of consumable supplies and tangible personal property that the

Contractor is required to remove from the **Site** during or upon completion of the **Work** from the **Work** and labor, services, and any other matters to be provided, and provided further that the subcontracts and purchase agreements provide separate prices for tangible personal property and all other services and matters. Such separation shall actually be followed in practice, including the separation of payments for tangible personal property from the payments for other **Work** and labor and other things to be provided.

62.6 The **Contractor** and its **Subcontractors** and **Materialmen** shall furnish a **Contractor** Exempt Purchase Certificate to all persons, firms or corporations from which they purchase tangible personal property for the performance of the **Work** covered by this **Contract**.

62.7 In the event any of the provisions of this Article 62 shall be deemed to be in conflict with any other provisions of this **Contract** or create any ambiguity, then the provisions of this Article 62 shall control.

ARTICLE 63. INVESTIGATION(S) CLAUSE

63.1 The parties to this **Contract** agree to cooperate fully and faithfully with any investigation, audit or inquiry conducted by a United States, a State of New York (State) or a **City** governmental agency or authority that is empowered directly or by designation to compel the attendance of witnesses and to examine witnesses under oath, or conducted by the Inspector General of a governmental agency that is a party in interest to the transaction, submitted bid, submitted proposal, contract, lease, permit or license that is the subject of the investigation, audit or inquiry.

63.2 If any person who has been advised that his/her statement, and any information from such statement, will not be used against him/her in any subsequent criminal proceeding refuses to testify before a grand jury or other governmental agency or authority empowered directly or by designation to compel the attendance of witnesses and to examine witnesses under oath concerning the award of or performance under any transaction, agreement, lease, permit, contract, or license entered into with the **City**, the State, or any political subdivision or public authority thereof, or the Port Authority of New York and New Jersey, or any local development corporation within the **City**, or any public benefit corporation organized under the **Laws** of the State of New York, or;

63.3 If any person refuses to testify for a reason other than the assertion of his/her privilege against self incrimination in an investigation, audit or inquiry conducted by a **City** or State governmental agency or authority empowered directly or by designation to compel the attendance of witnesses and to take testimony under oath, or by the Inspector General of the governmental agency that is a party in interest in, and is seeking testimony concerning the award of, or performance under any transaction, agreement, lease, permit, contract, or license entered into with the **City**, the State, or any political subdivision thereof or any local development corporation within the **City**, then;

63.4 The **Commissioner** whose **Agency** is a party in interest to the transaction, submitted bid, submitted proposal, contract, lease, permit, or license shall convene a hearing, upon not less than five (5) **Days**' written notice to the parties involved to determine if any penalties should attach for the failure of a person to testify.

63.5 If any non-governmental party to the hearing requests an adjournment, the **Commissioner** who convened the hearing may, upon granting the adjournment, suspend any contract, lease, permit, or license, pending the final determination pursuant to Article 63.7 without the **City** incurring any penalty or damages for delay or otherwise.

63.6 The penalties which may attach after a final determination by the **Commissioner** may include but shall not exceed:

63.6.1 The disqualification for a period not to exceed five (5) years from the date of an adverse determination for any person, or any entity of which such person was a member at the time the testimony was sought, from submitting bids for, or transacting business with, or entering into or obtaining any contract, lease, permit or license with or from the **City**; and/or

63.6.2 The cancellation or termination of any and all such existing **City** contracts, leases, permits or licenses that the refusal to testify concerns and that have not been assigned as permitted under this **Contract**, nor the proceeds of which pledged, to an unaffiliated and unrelated institutional lender for fair value prior to the issuance of the notice scheduling the hearing, without the **City** incurring any penalty or damages on account of such cancellation or termination; monies lawfully due for goods delivered, work done, rentals, or fees accrued prior to the cancellation or termination shall be paid by the **City**.

63.7 The **Commissioner** shall consider and address in reaching his/her determination and in assessing an appropriate penalty the factors in Articles 63.7.1 and 63.7.2. The **Commissioner** may also consider, if relevant and appropriate, the criteria established in Articles 63.7.3 and 63.7.4, in addition to any other information which may be relevant and appropriate:

63.7.1 The party's good faith endeavors or lack thereof to cooperate fully and faithfully with any governmental investigation or audit, including but not limited to the discipline, discharge, or disassociation of any person failing to testify, the production of accurate and complete books and records, and the forthcoming testimony of all other members, agents, assignees or fiduciaries whose testimony is sought.

63.7.2 The relationship of the person who refused to testify to any entity that is a party to the hearing, including but not limited to, whether the person whose testimony is sought has an ownership interest in the entity and/or the degree of authority and responsibility the person has within the entity.

63.7.3 The nexus of the testimony sought to the subject entity and its contracts, leases, permits or licenses with the **City**.

63.7.4 The effect a penalty may have on an unaffiliated and unrelated party or entity that has a significant interest in an entity subject to penalties under Article 63.6, provided that the party or entity has given actual notice to the **Commissioner** upon the acquisition of the interest, or at the hearing called for in Article 63.4, gives notice and proves that such interest was previously acquired. Under either circumstance the party or entity shall present evidence at the hearing demonstrating the potential adverse impact a penalty will have on such person or entity.

63.8 Definitions:

63.8.1 The term "license" or "permit" as used in this Article 63 shall be defined as a license, permit, franchise or concession not granted as a matter of right.

63.8.2 The term "person" as used in this Article 63 shall be defined as any natural person doing business alone or associated with another person or entity as a partner, director, officer, principal or employee.

63.8.3 The term "entity" as used in this Article 63 shall be defined as any firm, partnership, corporation, association, joint venture, or person that receives monies, benefits, licenses, leases, or permits from or through the **City** or otherwise transacts business with the **City**.

63.8.4 The term "member" as used in this Article 63 shall be defined as any person associated with another person or entity as a partner, director, officer, principal or employee.

63.9 In addition to and notwithstanding any other provision of this **Contract**, the **Commissioner** may in his/her sole discretion terminate this **Contract** upon not less than three (3) **Days'** written notice in the event the **Contractor** fails to promptly report in writing to the **Commissioner** of the Department of Investigations ("DOI") of the **City** any solicitation of money, goods, requests for future employment or other benefit or thing of value, by or on behalf of any employee of the **City** or other person, firm, corporation or entity for any purpose which may be related to the procurement or obtaining of this **Contract** by the **Contractor**, or affecting the performance of this **Contract**.

ARTICLE 64. TERMINATION BY THE CITY

64.1 In addition to termination pursuant to any other article of this **Contract**, the **Commissioner** may, at any time, terminate this **Contract** by written notice to the **Contractor**. In the event of termination, the **Contractor** shall, upon receipt of such notice, unless otherwise directed by the **Commissioner**:

64.1.1 Stop **Work** on the date specified in the notice;

64.1.2 Take such action as may be necessary for the protection and preservation of the **City's** materials and property;

64.1.3 Cancel all cancelable orders for material and equipment;

64.1.4 Assign to the **City** and deliver to the **Site** or another location designated by the **Commissioner**, any non-cancelable orders for material and equipment that is not capable of use except in the performance of this **Contract** and has been specifically fabricated for the sole purpose of this **Contract** and not incorporated in the **Work**;

64.1.5 Take no action which will increase the amounts payable by the **City** under this **Contract**.

64.2 In the event of termination by the **City** pursuant to this Article 64, payment to the **Contractor** shall be in accordance with Articles 64.2.1, 64.2.2 or 64.2.3, to the extent that each respective article applies.

64.2.1 Lump Sum Contracts or Items: On all lump sum **Contracts**, or on lump sum items in a **Contract**, the **City** will pay the **Contractor** the sum of the amounts described in Articles 64.2.1(a) and 64.2.1(b), less all payments previously made pursuant to this **Contract**. On lump sum **Contracts** only, the **City** will also pay the **Contractor** an additional sum as provided in Article 64.2.1(c).

64.2.1(a) For **Work** completed prior to the notice of termination, the **Contractor** shall be paid a pro rata portion of the lump sum bid amount, plus approved change orders, based upon the percent completion of the **Work**, as determined by the

Commissioner. For the purpose of determining the pro rata portion of the lump sum bid amount to which the **Contractor** is entitled, the bid breakdown submitted in accordance with Article 41 shall be considered, but shall not be dispositive. The **Commissioner's** determination hereunder shall be final, binding, and conclusive.

64.2.1(b) For non-cancelable material and equipment that is not capable of use except in the performance of this **Contract** and has been specifically fabricated for the sole purpose of this **Contract**, but not yet incorporated in the **Work**, the **Contractor** shall be paid the lesser of the following, less salvage value:

64.2.1(b)(i) The Direct Cost, as defined in Article 64.2.4; or

64.2.1(b)(ii) The fair and reasonable value, if less than Direct Cost, of such material and equipment, plus necessary and reasonable delivery costs.

64.2.1(b)(iii) In addition, the **Contractor** shall be paid five (5%) percent of the amount described in Article 64.2.1(b)(i) or Article 64.2.1(b)(ii), whichever applies.

64.2.1(c) Except as otherwise provided in Article 64.2.1(d), on all lump sum **Contracts**, the **Contractor** shall be paid the percentage indicated below applied to the difference between the total lump sum bid amount and the total of all payments made prior to the notice of termination plus all payments allowed pursuant to Articles 64.2.1(a) and 64.2.1(b):

64.2.1(c)(i) Five (5%) percent of the first five million ($5,000,000) dollars; and

64.2.1(c)(ii) Three (3%) percent of any amount between five million ($5,000,000) dollars and fifteen million ($15,000,000) dollars; plus

64.2.1(c)(iii) One (1%) percent of any amount over fifteen million ($15,000,000) dollars.

64.2.1(d) In the event the **City** terminates a lump sum **Contract** pursuant to this Article 64 within ninety (90) **Days** after registration of the **Contract** with the **Comptroller**, the **Contractor** shall be paid one (1%) percent of the difference between the lump sum bid amount and the total of all payments made pursuant to this Article 64.2.

64.2.2 Unit Price Contracts or Items: On all unit price **Contracts**, or on unit price items in a **Contract**, the **City** will pay the **Contractor** the sum of the amounts described in Articles 64.2.2(a) and 64.2.2(b), less all payments previously made pursuant to this **Contract**:

64.2.2(a) For all completed units, the unit price stated in the **Contract**, and

64.2.2(b) For units that have been ordered but are only partially completed, the **Contractor** will be paid:

64.2.2(b)(i) A pro rata portion of the unit price stated in the **Contract** based upon the percent completion of the unit and

64.2.2(b)(ii) For non-cancelable material and equipment, payment will be made pursuant to Article 64.2.1(b).

64.2.3 Time and Materials Contracts or Items Based on Time and Material Records: On all **Contracts** or items in a **Contract** where payment for the **Work** is based on time and material records, the **Contractor** shall be paid in accordance with Article 26, less all payments previously made pursuant to this **Contract**.

64.2.4 Direct Costs: Direct Costs as used in this Article 64.2 shall mean:

64.2.4(a) The actual purchase price of material and equipment, plus necessary and reasonable delivery costs,

64.2.4(b) The actual cost of labor involved in construction and installation at the **Site**, and

64.2.4(c) The actual cost of necessary bonds and insurance purchased pursuant to requirements of this **Contract** less any amounts that have been or should be refunded by the **Contractor's** sureties or insurance carriers.

64.2.4(d) Direct Costs shall not include overhead.

64.3 In no event shall any payments under this Article 64 exceed the **Contract** price for such items.

64.4 All payments pursuant to Article 64 shall be in the nature of liquidated damages and shall be accepted by the **Contractor** in full satisfaction of all claims against the **City**.

64.5 The **City** may deduct or set off against any sums due and payable pursuant to this Article 64, any deductions authorized by this **Contract** or by **Law** (including but not limited to liquidated damages) and any claims it may have against the **Contractor**. The **City's** exercise of the right to terminate the **Contract** pursuant to this Article 64 shall not impair or otherwise effect the **City's** right to assert any claims it may have against the **Contractor** in a plenary action.

64.6 Where the **Work** covered by the **Contract** has been substantially completed, as determined in writing by the **Commissioner**, termination of the **Work** shall be handled as an omission of **Work** pursuant to Articles 29 and 33, in which case a change order will be issued to reflect an appropriate reduction in the **Contract** sum, or if the amount is determined after final payment, such amount shall be paid by the **Contractor**.

ARTICLE 65. CHOICE OF LAW, CONSENT TO JURISDICTION AND VENUE

65.1 This **Contract** shall be deemed to be executed in the **City** regardless of the domicile of the **Contractor**, and shall be governed by and construed in accordance with the **Laws** of the State of New York and the **Laws** of the United States, where applicable.

65.2 The parties agree that any and all claims asserted against the **City** arising under this **Contract** or related thereto shall be heard and determined in the courts of the State of New York ("New York State Courts") located in the **City** and County of New York. To effect this **Contract** and intent, the **Contractor** agrees:

65.2.1 If the **City** initiates any action against the **Contractor** in Federal court or in a New York State Court, service of process may be made on the **Contractor** either in person, wherever such **Contractor** may be found, or by registered mail addressed to the **Contractor** at its address as set forth in this **Contract**, or to such other address as the **Contractor** may provide to the **City** in writing; and

65.2.2 With respect to any action between the **City** and the **Contractor** in a New York State Court, the **Contractor** hereby expressly waives and relinquishes any rights it might otherwise have:

65.2.2(a) To move to dismiss on grounds of forum non conveniens;

65.2.2(b) To remove to Federal Court; and

65.2.2(c) To move for a change of venue to a New York State Court outside New York County.

65.2.3 With respect to any action brought by the **City** against the **Contractor** in a Federal Court located in the **City**, the **Contractor** expressly waives and relinquishes any right it might otherwise have to move to transfer the action to a Federal Court outside the **City**.

65.2.4 If the **Contractor** commences any action against the **City** in a court located other than in the **City** and County of New York, upon request of the **City**, the **Contractor** shall either consent to a transfer of the action to a New York State Court of competent jurisdiction located in the **City** and County of New York or, if the Court where the action is initially brought will not or cannot transfer the action, the **Contractor** shall consent to dismiss such action without prejudice and may thereafter reinstate the action in a New York State Court of competent jurisdiction in New York County.

65.3 If any provision(s) of this Article 65 is held unenforceable for any reason, each and all other provision(s) shall nevertheless remain in full force and effect.

ARTICLE 66. PARTICIPATION IN AN INTERNATIONAL BOYCOTT

66.1 The **Contractor** agrees that neither the **Contractor** nor any substantially owned affiliated company is participating or shall participate in an international boycott in violation of the provisions of the Federal Export Administration Act of 1979, as amended, or the regulations of the United States Department of Commerce (Commerce Department) promulgated thereunder.

66.2 Upon the final determination by the Commerce Department or any other agency of the United States as to, or conviction of the **Contractor** or a substantially-owned affiliated company thereof for participation in an international boycott in violation of the provisions of the Export Administration Act of 1979, as amended, or the regulations promulgated thereunder, the **Comptroller** may, at his/her option, render forfeit and void this **Contract**.

66.3 The **Contractor** shall comply in all respects, with the provisions of Section 6-114 of the Administrative Code and the rules and regulations issued by the **Comptroller** thereunder.

ARTICLE 67. LOCALLY BASED ENTERPRISE PROGRAM

67.1 This **Contract** is subject to the requirements of Section 6-108.1 of the Administrative Code and regulations promulgated thereunder. No construction contract shall be awarded unless and until these requirements have been complied with in their entirety; however, compliance with this Article 67 is not required if the Agency sets Subcontractor Participation Goals for Minority- and Women-Owned Business Enterprises (M/WBEs).

67.2 Unless specifically waived by the **Commissioner** with the approval of the Division of Economic and Financial Opportunity of the **City** Department of Business Services, if any portion of the **Contract** is subcontracted, not less than ten (10%) percent of the total dollar amount of the **Contract** shall be awarded to locally based enterprises (LBEs); except that where less than ten (10%) percent of the total dollar amount of the **Contract** is subcontracted, such lesser percentage shall be so awarded.

67.3 The **Contractor** shall not require performance and payment bonds from LBE **Subcontractors**.

67.4 If the **Contractor** has indicated prior to award that no **Work** will be subcontracted, no **Work** shall be subcontracted without the prior approval of the **Commissioner**, which shall be granted only if the **Contractor** makes a good faith effort beginning at least six (6) weeks before the **Work** is to be performed to obtain LBE **Subcontractors** to perform the **Work**.

67.5 If the **Contractor** has not identified sufficient LBE **Subcontractors** prior to award, it shall sign a letter of compliance stating that it complies with Section 6-108.1 of the Administrative Code, recognizes that achieving the LBE requirement is a condition of its **Contract**, and shall submit documentation demonstrating its good faith efforts to obtain LBEs. After award, the **Contractor** shall begin to solicit LBE's to perform subcontracted **Work** at least six (6) weeks before the date such **Work** is to be performed and shall demonstrate that a good faith effort has been made to obtain LBEs on each subcontract until it meets the required percentage.

67.6 Failure of the **Contractor** to comply with the requirements of Section 6-108.1 of the Administrative Code and the regulations promulgated thereunder shall constitute a material breach of this **Contract**. Remedy for such breach may include the imposition of any or all of the following sanctions:

67.6.1 Reducing the **Contractor's** compensation by an amount equal to the dollar value of the percentage of the LBE subcontracting requirement not complied with;

67.6.2 Declaring the **Contractor** in default;

67.6.3 If the **Contractor** is an LBE, de-certifying and declaring the **Contractor** ineligible to participate in the LBE program for a period of up to three (3) years.

ARTICLE 68. ANTITRUST

68.1 The **Contractor** hereby assigns, sells, and transfers to the **City** all right, title, and interest in and to any claims and causes of action arising under the antitrust **Laws** of New York State or of the United States relating to the particular goods or services purchased or procured by the **City** under this **Contract**.

ARTICLE 69. MacBRIDE PRINCIPLES PROVISIONS

69.1 Notice To All Prospective **Contractors**:

69.1.1 Local Law No. 34 of 1991 became effective on September 10, 1991 and added Section 6-115.1 of the Administrative Code. The local **Law** provides for certain restrictions on **City Contracts** to express the opposition of the people of the **City** to employment discrimination practices in Northern Ireland to promote freedom of work-place opportunity.

69.1.2 Pursuant to Section 6-115.1, prospective **Contractors** for **Contracts** to provide goods or services involving an expenditure of an amount greater than ten thousand ($10,000.) dollars, or for construction involving an amount greater than fifteen thousand ($15,000.) dollars, are asked to sign a rider in which they covenant and represent, as a material condition of their **Contract**, that any business operations in Northern Ireland conducted by the **Contractor** and any individual or legal entity in which the **Contractor** holds a ten (10%) percent or greater ownership interest in the **Contractor** will be conducted in accordance with the MacBride Principles of nondiscrimination in employment.

69.1.3 Prospective **Contractors** are not required to agree to these conditions. However, in the case of **Contracts** let by competitive sealed bidding, whenever the lowest responsible bidder has not agreed to stipulate to the conditions set forth in this notice and another bidder who has agreed to stipulate to such conditions has submitted a bid within five (5%) percent of the lowest responsible bid for a **Contract** to supply goods, services or contraction of comparable quality, the **Agency** shall refer such bids to the Mayor, the Speaker or other officials, as appropriate, who may determine, in accordance with applicable **Law**, that it is in the best interest of the **City** that the **Contract** be awarded to other than the lowest responsible pursuant to Section 313(b)(2) of the **City** Charter.

69.1.4 In the case of **Contracts** let by other than competitive sealed bidding, if a prospective **Contractor** does not agree to these conditions, no **Agency**, elected official or the **City** Council shall award the **Contract** to that bidder unless the **Agency** seeking to use the goods, services or construction certifies in writing that the **Contract** is necessary for the **Agency** to perform its functions and there is no other responsible **Contractor** who will supply goods, services or construction of comparable quality at a comparable price.

69.2 In accordance with Section 6-115.1 of the Administrative Code, the **Contractor** stipulates that such **Contractor** and any individual or legal entity in which the **Contractor** holds a ten (10%) percent or greater ownership interest in the **Contractor** either:

69.2.1 Have no business operations in Northern Ireland, or

69.2.2 Shall take lawful steps in good faith to conduct any business operations they have in Northern Ireland in accordance with the MacBride Principles, and shall permit independent monitoring of their compliance with such principles.

69.3 For purposes of this Article, the following terms shall have the following meanings:

69.3.1 "MacBride Principles" shall mean those principles relating to nondiscrimination in employment and freedom of work-place opportunity which require employers doing business in Northern Ireland to:

69.3.1(a) increase the representation of individuals from under-represented religious groups in the workforce, including managerial, supervisory, administrative, clerical and technical jobs;

69.3.1(b) take steps to promote adequate security for the protection of employees from under-represented religious groups both at the work-place and while traveling to and from **Work**;

69.3.1(c) ban provocative religious or political emblems from the workplace;

69.3.1(d) publicly advertise all job openings and make special recruitment efforts to attract applicants from under-represented religious groups;

69.3.1(e) establish layoff, recall, and termination procedures which do not in practice favor a particular religious group;

69.3.1(f) abolish all job reservations, apprenticeship restrictions and different employment criteria which discriminate on the basis of religion;

69.3.1(g) develop training programs that will prepare substantial numbers of current employees from under-represented religious groups for skilled jobs, including the expansion of existing programs and the creation of new programs to train, upgrade, and improve the skills of workers from under-represented religious groups;

69.3.1(h) establish procedures to asses, identify, and actively recruit employees from under-represented religious groups with potential for further advancement; and

69.3.1(i) appoint a senior management staff member to oversee affirmative action efforts and develop a timetable to ensure their full implementation.

69.4 The **Contractor** agrees that the covenants and representations in Article 69.2 are material conditions to this **Contract**. In the event the **Agency** receives information that the **Contractor** who made the stipulation required by this Article 69 is in violation thereof, the **Agency** shall review such information and give the **Contractor** an opportunity to respond. If the **Agency** finds that a violation has occurred, the **Agency** shall have the right to declare the **Contractor** in default in default and/or terminate this **Contract** for cause and procure supplies, services or **Work** from another source in the manner the **Agency** deems proper. In the event of such termination, the **Contractor** shall pay to the **Agency**, or the **Agency** in its sole discretion may withhold from any amounts otherwise payable to the **Contractor**, the difference between the **Contract** price for the uncompleted portion of this **Contract** and the cost to the **Agency** of completing performance of this **Contract** either itself or by engaging another **Contractor** or **Contractors**. In the case of a requirement **Contract**, the **Contractor** shall be liable for such difference in price for the entire amount of supplies required by the **Agency** for the uncompleted term of **Contractor's Contract**. In the case of a construction **Contract**, the **Agency** shall also have the right to hold the **Contractor** in partial or total default in accordance with the default provisions of this **Contract**, and/or may seek debarment or suspension of the **Contractor**. The rights and remedies of the **Agency** hereunder shall be in addition to, and not in lieu of, any rights and remedies the **Agency** has pursuant to this **Contract** or by operation of **Law**.

ARTICLE 70. ELECTRONIC FILING/NYC DEVELOPMENT HUB

70.1 The **Contractor** shall electronically file all alteration type-2 and alteration type-3 applications via the New York City Development Hub Web site, except applications for the following types of minor alterations: enlargements, curb cuts, legalizations, fire alarms, builders pavement plans, and jobs filed on Landmark Preservation Commission calendared properties. All such filings must be professionally certified. Information about electronic filing via the New York City Development Hub is available on the **City** Department of Buildings Web site at www.nyc.gov/buildings.

ARTICLE 71. PROHIBITION OF TROPICAL HARDWOODS

71.1 Tropical hardwoods, as defined in Section 165 of the New York State Finance Law (Finance Law), shall not be utilized in the performance of this **Contract** except as expressly permitted by Section 165 of the Finance Law.

ARTICLE 72. CONFLICTS OF INTEREST

72.1 Section 2604 of the **City** Charter and other related provisions of the **City** Charter, the Administrative Code, and the Penal Law are applicable under the terms of this **Contract** in relation to conflicts of interest and shall be extended to **Subcontractors** authorized to perform **Work**, labor and services pursuant to this **Contract** and further, it shall be the duty and responsibility of the **Contractor** to so inform its respective **Subcontractors**. Notice is hereby given that, under certain circumstances, penalties may be invoked against the donor as well as the recipient of any form of valuable gift.

ARTICLE 73. MERGER CLAUSE

73.1 The written **Contract** herein, contains all the terms and conditions agreed upon by the parties hereto, and no other agreement, oral or otherwise, regarding the subject matter of this **Contract** shall be deemed to exist or to bind any of the parties hereto, or to vary any of the terms contained herein.

ARTICLE 74. STATEMENT OF WORK

74.1 The **Contractor** shall furnish all labor and materials and perform all **Work** in strict accordance with the **Specifications** and **Addenda** thereto, numbered as shown in Schedule A.

ARTICLE 75. COMPENSATION TO BE PAID TO CONTRACTOR

75.1 The **City** will pay and the **Contractor** will accept in full consideration for the performance of the **Contract**, subject to additions and deductions as provided herein, the total sum shown in Schedule A, this said sum being the amount at which the **Contract** was awarded to the **Contractor** at a public letting thereof, based upon the **Contractor's** bid for the **Contract**.

ARTICLE 76. ELECTRONIC FUNDS TRANSFER

76.1 In accordance with Section 6-107.1 of the Administrative Code, the **Contractor** agrees to accept payments under this **Contract** from the **City** by electronic funds transfer (EFT). An EFT is any

transfer of funds, other than a transaction originated by check, draft or similar paper instrument, which is initiated through an electronic terminal, telephonic instrument or computer or magnetic tape so as to order, instruct or authorize a financial institution to debit or credit an account. Prior to the first payment made under this **Contract**, the **Contractor** shall designate one financial institution or other authorized payment agent and shall complete the attached "EFT Vendor Payment Enrollment Form" in order to provide the Commissioner of the **City** Department of Finance with information necessary for the **Contractor** to receive electronic funds transfer payments through a designated financial institution or authorized payment agent. The crediting of the amount of a payment to the appropriate account on the books of a financial institution or other authorized payment agent designated by the **Contractor** shall constitute full satisfaction by the **City** for the amount of the payment under this **Contract**. The account information supplied by the **Contractor** to facilitate the electronic funds transfer shall remain confidential to the fullest extent provided by **Law**.

76.2 The **Commissioner** may waive the application of the requirements of this Article 76 to payments on contracts entered into pursuant to Section 315 of the **City** Charter. In addition, the Commissioner of the Department of Finance and the Comptroller may jointly issue standards pursuant to which the **Agency** may waive the requirements of this Article 76 for payments in the following circumstances: (i) for individuals or classes of individuals for whom compliance imposes a hardship; (ii) for classifications or types of checks; or (iii) in other circumstances as may be necessary in the interest of the **City**.

ARTICLE 77. RECORDS RETENTION

77.1 The **Contractor** agrees to retain all books, records, and other documents relevant to this **Contract** for six years after the final payment or termination of this **Contract**, whichever is later. **City**, state, and federal auditors and any other persons duly authorized by the **City** shall have full access to and the right to examine any such books, records, and other documents during the retention period.

ARTICLE 78. EXAMINATION AND VIEWING OF SITE, CONSIDERATION OF OTHER SOURCES OF INFORMATION AND CHANGED SITE CONDITIONS

78.1 Pre-Bidding (Investigation) Viewing of Site – Bidders must carefully view and examine the **Site** of the proposed **Work**, as well as its adjacent area, and seek other usual sources of information, for they will be conclusively presumed to have full knowledge of any and all conditions and hazards on, about or above the **Site** relating to or affecting in any way the performance of the **Work** to be done under the **Contract** that were or should have been known by a reasonably prudent bidder. To arrange a date for visiting the **Site**, bidders are to contact the **Agency** contact person specified in the bid documents.

78.2 Should the **Contractor** encounter during the progress of the Work site conditions or environmental hazards at the **Site** materially differing from any shown on the **Contract Drawings** or indicated in the **Specifications** or such conditions or environmental hazards as could not reasonably have been anticipated by the **Contractor**, which conditions or hazards will materially affect the cost of the **Work** to be done under the **Contract**, the attention of the **Commissioner** must be called immediately to such conditions or hazards before they are disturbed. The **Commissioner** shall thereupon promptly investigate the conditions or hazards. If the **Commissioner** finds that they do so materially differ, and that they could not have been reasonably anticipated by the **Contractor**, the **Contract** may be modified with the **Commissioner**'s written approval.

ARTICLE 79. PARTICIPATION BY MINORITY-OWNED AND WOMEN-OWNED BUSINESS ENTERPRISES IN CITY PROCUREMENT

NOTICE TO ALL PROSPECTIVE CONTRACTORS

ARTICLE I. M/WBE PROGRAM

Local Law No. 129 of 2005 added and Local Law 1 of 2013 amended Section 6-129 of the Administrative Code of the City of New York (hereinafter "Section 6-129"). Section 6-129 establishes the program for participation in City procurement ("M/WBE Program") by minority- owned business enterprises ("MBEs") and women-owned business enterprises ("WBEs"), certified in accordance with Section 1304 of the New York City Charter. As stated in Section 6-129, the intent of the program is to address the impact of discrimination on the City's procurement process, and to promote the public interest in avoiding fraud and favoritism in the procurement process, increasing competition for City business, and lowering contract costs. The contract provisions contained herein are pursuant to Section 6-129, and the rules of the Department of Small Business Services ("DSBS") promulgated thereunder.

If this Contract is subject to the M/WBE Program established by Section 6-129, the specific requirements of MBE and/or WBE participation for this Contract are set forth in Schedule B of the Contract (entitled the "M/WBE Utilization Plan"), and are detailed below. The Contractor must comply with all applicable MBE and WBE requirements for this Contract.

All provisions of Section 6-129 are hereby incorporated in the Contract by reference and all terms used herein that are not defined herein shall have the meanings given such terms in Section 6-129. Article I, Part A, below, sets forth provisions related to the participation goals for construction, standard and professional services contracts. Article I, Part B, below, sets forth miscellaneous provisions related to the M/WBE Program.

PART A

PARTICIPATION GOALS FOR CONSTRUCTION, STANDARD AND PROFESSIONAL SERVICES CONTRACTS OR TASK ORDERS

1. The **MBE and/or WBE Participation Goals** established for this Contract or Task Orders issued pursuant to this Contract, ("**Participation Goals**"), as applicable, are set forth on Schedule B, Part I to this Contract (see Page 1, line 1 Total Participation Goals) or will be set forth on Schedule B, Part I to Task Orders issued pursuant to this Contract, as applicable.

The **Participation Goals** represent a percentage of the total dollar value of the Contract or Task Order, as applicable, that may be achieved by awarding subcontracts to firms certified with New York City Department of Small Business Services as MBEs and/or WBEs, and/or by crediting the participation of prime contractors and/or qualified joint ventures as provided in Section 3 below, unless the goals have been waived or modified by Agency in accordance with Section 6-129 and Part A, Sections 10 and 11 below, respectively.

2. If **Participation Goals** have been established for this Contract or Task Orders issued pursuant to this Contract, Contractor agrees or shall agree as a material term of the Contract that Contractor shall be subject to the **Participation Goals**, unless the goals are waived or modified by Agency in accordance with Section 6-129 and Part A, Sections 10 and 11 below, respectively.

3. If **Participation Goals** have been established for this Contract or Task Order issued pursuant to this Contract, a Contractor that is an MBE and/or WBE shall be permitted to count its own participation toward fulfillment of the relevant **Participation Goal**, provided that in accordance with Section 6-129 the value of Contractor's participation shall be determined by subtracting from the total value of the Contract or Task Order, as applicable, any amounts that the Contractor pays to direct subcontractors (as defined in Section 6-129(c)(13)), and provided further that a Contractor that is certified as both an MBE and a WBE may count its own participation either toward the goal for MBEs or the goal for WBEs, but not both.

A Contractor that is a qualified joint venture (as defined in Section 6-129(c)(30)) shall be permitted to count a percentage of its own participation toward fulfillment of the relevant **Participation Goal**. In accordance with Section 6-129, the value of Contractor's participation shall be determined by subtracting from the total value of the Contract or Task Order, as applicable, any amounts that Contractor pays to direct subcontractors, and then multiplying the remainder by the percentage to be applied to total profit to determine the amount to which an MBE or WBE is entitled pursuant to the joint venture agreement, provided that where a participant in a joint venture is certified as both an MBE and a WBE, such amount shall be counted either toward the goal for MBEs or the goal for WBEs, but not both.

4. A. If **Participation Goals** have been established for this Contract, a prospective contractor shall be required to submit with its bid or proposal, as applicable, a completed Schedule B, M/WBE Utilization Plan, Part II (see Pages 2-4) indicating: (a) whether the contractor is an MBE or WBE, or qualified joint venture; (b) the percentage of work it intends to award to direct subcontractors; and (c) in cases where the contractor intends to award direct subcontracts, a description of the type and dollar value of work designated for participation by MBEs and/or WBEs, and the time frames in which such work is scheduled to begin and end. In the event that this M/WBE Utilization Plan indicates that the bidder or proposer, as applicable, does not intend to meet the **Participation Goals**, the bid or proposal, as applicable, shall be deemed non-responsive, unless Agency has granted the bidder or proposer, as applicable, a pre- award waiver of the Participation Goals in accordance with Section 6-129 and Part A, Section 10 below.

B. (i) If this Contract is for a master services agreement or other requirements type contract that will result in the issuance of Task Orders that will be individually registered ("Master Services Agreement") and is subject to M/WBE **Participation Goals**, a prospective contractor shall be required to submit with its bid or proposal, as applicable, a completed Schedule B, M/WBE Participation Requirements for Master Services Agreements That Will Require Individually Registered Task Orders, Part II (page 2) indicating the prospective contractor's certification and required affirmations to make all reasonable good faith efforts to meet participation goals established on each individual Task Order issued pursuant to this Contract, or if a partial waiver is obtained or such goals are modified by the Agency, to meet the modified **Participation Goals** by soliciting and obtaining the participation of certified MBE and/or WBE firms. In the event that the Schedule B indicates that the bidder or proposer, as applicable, does not intend to meet the **Participation Goals** that may be established on Task Orders issued pursuant to this Contract, the bid or proposal, as applicable, shall be deemed nonresponsive.

(ii) **Participation Goals** on a Master Services Agreement will be established for individual Task Orders issued after the Master Services Agreement is awarded. If **Participation Goals** have been established on a Task Order, a contractor shall be required to submit a Schedule B – M/WBE Utilization Plan For Independently Registered Task Orders That Are Issued Pursuant to Master Services Agreements, Part II (see Pages 2-4) indicating: (a) whether the contractor is an MBE or WBE, or qualified joint venture; (b) the percentage of work it intends to award to direct subcontractors; and (c) in cases where the contractor intends to award direct subcontracts, a description of the type and dollar value of work designated for participation by MBEs and/or WBEs, and the time frames in which such work is scheduled to begin and end. The contractor must engage in good faith efforts to meet the **Participation Goals** as established for the Task Order unless Agency has granted the contractor a pre-award waiver of the Participation Goals in accordance with Section 6-129 and Part A, Section 10 below.

C. THE BIDDER/PROPOSER MUST COMPLETE THE SCHEDULE B INCLUDED HEREIN (SCHEDULE B, PART II). A SCHEDULE B SUBMITTED BY THE BIDDER/PROPOSER WHICH DOES NOT INCLUDE THE VENDOR CERTIFICATION AND REQUIRED AFFIRMATIONS (SEE SECTION V OF PART II) WILL BE DEEMED TO BE NON-RESPONSIVE, UNLESS A FULL WAIVER OF THE PARTICIPATION GOALS IS GRANTED (SCHEDULE B, PART III). IN THE EVENT THAT THE CITY DETERMINES THAT THE BIDDER/PROPOSER HAS SUBMITTED A SCHEDULE B WHERE THE VENDOR CERTIFICATION AND REQUIRED AFFIRMATIONS ARE COMPLETED BUT OTHER ASPECTS OF THE SCHEDULE B ARE NOT COMPLETE, OR CONTAIN A COPY OR COMPUTATION ERROR THAT IS AT ODDS WITH THE VENDOR CERTIFICATION AND AFFIRMATIONS, THE BIDDER/PROPOSER WILL BE NOTIFIED BY THE AGENCY AND WILL BE GIVEN FOUR (4) CALENDAR DAYS FROM RECEIPT OF NOTIFICATION TO CURE THE SPECIFIED DEFICIENCIES AND RETURN A COMPLETED SCHEDULE B TO THE AGENCY. FAILURE TO DO SO WILL RESULT IN A DETERMINATION THAT THE BID/PROPOSAL IS NON-RESPONSIVE. RECEIPT OF NOTIFICATION IS DEFINED AS THE DATE NOTICE IS E-MAILED OR FAXED (IF THE BIDDER/PROPOSER HAS PROVIDED AN E-MAIL ADDRESS OR FAX NUMBER), OR NO LATER THAN FIVE (5) CALENDAR DAYS FROM THE DATE OF MAILING OR UPON DELIVERY, IF DELIVERED.

5. Where an **M/WBE** Utilization Plan has been submitted, the Contractor shall, within 30 days of issuance by Agency of a notice to proceed, submit a list of proposed persons or entities to which it intends to award subcontracts within the subsequent 12 months. In the case of multiyear contracts, such list shall also be submitted every year thereafter. The Agency may also require the Contractor to report periodically about the contracts awarded by its direct subcontractors to indirect subcontractors (as defined in Section 6-129(c)(22)). **PLEASE NOTE: If this Contract is a public works project subject to GML §101(5) (i.e., a contract valued at or below $3M for projects in New York City) or if the Contract is subject to a project labor agreement in accordance with Labor Law §222, and the bidder is required to identify at the time of bid submission its intended subcontractors for the Wicks trades (plumbing and gas fitting; steam heating, hot water heating, ventilating and air conditioning (HVAC); and electric wiring), the Contractor must identify all those to which it intends to award construction subcontracts for any portion of the Wicks trade work at the time of bid submission, regardless of what point in the life of the contract such subcontracts will occur. In identifying intended subcontractors in the bid submission, bidders may satisfy any Participation Goals established for this Contract by proposing one or more subcontractors that are MBEs and/or WBEs for any portion of the Wicks trade work**. In the event that the Contractor's selection of a subcontractor is disapproved, the Contractor shall have a reasonable time to propose alternate subcontractors.

6. MBE and WBE firms must be certified by DSBS in order for the Contractor to credit such firms' participation toward the attainment of the **Participation Goals**. Such certification must occur prior to the

firms' commencement of work. A list of MBE and WBE firms may be obtained from the DSBS website at www.nyc.gov/buycertified, by emailing DSBS at buyer@sbs.nyc.gov, by calling (212) 513-6356, or by visiting or writing DSBS at 110 William St., New York, New York, 10038, 7th floor. Eligible firms that have not yet been certified may contact DSBS in order to seek certification by visiting www.nyc.gov/getcertified, emailing MWBE@sbs.nyc.gov, or calling the DSBS certification helpline at (212) 513-6311. A firm that is certified as both an MBE and a WBE may be counted either toward the goal for MBEs or the goal for WBEs, but not both. No credit shall be given for participation by a graduate MBE or graduate WBE, as defined in Section 6-129(c)(20).

7. Where an **M/WBE** Utilization Plan has been submitted, the Contractor shall, with each voucher for payment, and/or periodically as Agency may require, submit statements, certified under penalty of perjury, which shall include, but not be limited to,: the total amount the Contractor paid to its direct subcontractors, and, where applicable pursuant to Section 6-129(j), the total amount direct subcontractors paid to indirect subcontractors; the names, addresses and contact numbers of each MBE or WBE hired as a subcontractor by the Contractor, and, where applicable, hired by any of the Contractor's direct subcontractors; and the dates and amounts paid to each MBE or WBE. The Contractor shall also submit, along with its voucher for final payment: the total amount it paid to subcontractors, and, where applicable pursuant to Section 6-129(j), the total amount its direct subcontractors paid directly to their indirect subcontractors; and a final list, certified under penalty of perjury, which shall include the name, address and contact information of each subcontractor that is an MBE or WBE, the work performed by, and the dates and amounts paid to each.

8. If payments made to, or work performed by, MBEs or WBEs are less than the amount specified in the Contractor's **M/WBE** Utilization Plan, Agency shall take appropriate action, in accordance with Section 6-129 and Article II below, unless the Contractor has obtained a modification of its **M/WBE** Utilization Plan in accordance with Section 6-129 and Part A, Section 11 below.

9. Where an **M/WBE** Utilization Plan has been submitted, and the Contractor requests a change order the value of which exceeds the greater of 10 percent of the Contract or Task Order, as applicable, or $500,000, Agency shall review the scope of work for the Contract or Task Order, as applicable, and the scale and types of work involved in the change order, and determine whether the **Participation Goals** should be modified.

10. Pre-award waiver of the **Participation Goals**. (a) A bidder or proposer, or contractor with respect to a Task Order, may seek a pre-award full or partial waiver of the **Participation Goals** in accordance with Section 6-129, which requests that Agency change one or more **Participation Goals** on the grounds that the **Participation Goals** are unreasonable in light of the availability of certified firms to perform the services required, or by demonstrating that it has legitimate business reasons for proposing a lower level of subcontracting in its M/WBE Utilization Plan.

(b) To apply for a full or partial waiver of the **Participation Goals**, a bidder, proposer, or contractor, as applicable, must complete Part III (Page 5) of Schedule B and submit such request no later than seven (7) calendar days prior to the date and time the bids, proposals, or Task Orders are due, in writing to the Agency by email at poped@ddc.nyc.gov or via facsimile at (718) 391-1886. Bidders, proposers, or contractors, as applicable, who have submitted requests will receive an Agency response by no later than two (2) calendar days prior to the due date for bids, proposals, or Task Orders; provided, however, that if that date would fall on a weekend or holiday, an Agency response will be provided by close-of-business on the business day before such weekend or holiday date.

(c) If the Agency determines that the **Participation Goals** are unreasonable in light of the availability of certified firms to perform the services required, it shall revise the solicitation and extend the deadline for bids and proposals, or revise the Task Order, as applicable.

(d) Agency may grant a full or partial waiver of the **Participation Goals** to a bidder, proposer or contractor, as applicable, who demonstrates—before submission of the bid, proposal or Task Order, as applicable—that it has legitimate business reasons for proposing the level of subcontracting in its **M/WBE** Utilization Plan. In making its determination, Agency shall consider factors that shall include, but not be limited to, whether the bidder, proposer or contractor, as applicable, has the capacity and the bona fide intention to perform the Contract without any subcontracting, or to perform the Contract without awarding the amount of subcontracts represented by the **Participation Goals**. In making such determination, Agency may consider whether the **M/WBE** Utilization Plan is consistent with past subcontracting practices of the bidder, proposer or contractor, as applicable, whether the bidder, proposer or contractor, as applicable, has made efforts to form a joint venture with a certified firm, and whether the bidder, proposer, or contractor, as applicable, has made good faith efforts to identify other portions of the Contract that it intends to subcontract.

11. Modification of **M/WBE** Utilization Plan. (a) A Contractor may request a modification of its **M/WBE** Utilization Plan after award of this Contract. **PLEASE NOTE: If this Contract is a public works project subject to GML §101(5) (i.e., a contract valued at or below $3M for projects in New York City) or if the Contract is subject to a project labor agreement in accordance with Labor Law §222, and the bidder is required to identify at the time of bid submission its intended subcontractors for the Wicks trades (plumbing and gas fitting; steam heating, hot water heating, ventilating and air conditioning (HVAC); and electric wiring), the Contractor may request a Modification of its M/WBE Utilization Plan as part of its bid submission**. The Agency may grant a request for Modification of a Contractor's **M/WBE** Utilization Plan if it determines that the Contractor has established, with appropriate documentary and other evidence, that it made reasonable, good faith efforts to meet the **Participation Goals.** In making such determination, Agency shall consider evidence of the following efforts, as applicable, along with any other relevant factors:

(i) The Contractor advertised opportunities to participate in the Contract, where appropriate, in general circulation media, trade and professional association publications and small business media, and publications of minority and women's business organizations;
(ii) The Contractor provided notice of specific opportunities to participate in the Contract, in a timely manner, to minority and women's business organizations;
(iii) The Contractor sent written notices, by certified mail or facsimile, in a timely manner, to advise MBEs or WBEs that their interest in the Contract was solicited;
(iv) The Contractor made efforts to identify portions of the work that could be substituted for portions originally designated for participation by MBEs and/or WBEs in the M/WBE Utilization Plan, and for which the Contractor claims an inability to retain MBEs or WBEs;
(v) The Contractor held meetings with MBEs and/or WBEs prior to the date their bids or proposals were due, for the purpose of explaining in detail the scope and requirements of the work for which their bids or proposals were solicited;
(vi) The Contractor made efforts to negotiate with MBEs and/or WBEs as relevant to perform specific subcontracts, or act as suppliers or service providers;
(vii) Timely written requests for assistance made by the Contractor to Agency's M/WBE liaison officer and to DSBS;
(viii) Description of how recommendations made by DSBS and Agency were acted upon and an explanation of why action upon such recommendations did not lead to the desired level of participation of MBEs and/or WBEs.

Agency's M/WBE officer shall provide written notice to the Contractor of the determination.

(b) The Agency may modify the **Participation Goals** when the scope of the work has been changed by the Agency in a manner that affects the scale and types of work that the Contractor indicated in its **M/WBE** Utilization Plan would be awarded to subcontractors.

12. If this Contract is for an indefinite quantity of construction, standard or professional services or is a requirements type contract and the Contractor has submitted an **M/WBE** Utilization Plan and has committed to subcontract work to MBEs and/or WBEs in order to meet the **Participation Goals**, the Contractor will not be deemed in violation of the M/WBE Program requirements for this Contract with regard to any work which was intended to be subcontracted to an MBE and/or WBE to the extent that the Agency has determined that such work is not needed.

13. If **Participation Goals** have been established for this Contract or a Task Order issued pursuant to this Contract, at least once annually during the term of the Contract or Task Order, as applicable, Agency shall review the Contractor's progress toward attainment of its M/WBE Utilization Plan, including but not limited to, by reviewing the percentage of work the Contractor has actually awarded to MBE and/or WBE subcontractors and the payments the Contractor made to such subcontractors.

14. If **Participation Goals** have been established for this Contract or a Task Order issued pursuant to this Contract, Agency shall evaluate and assess the Contractor's performance in meeting those goals, and such evaluation and assessment shall become part of the Contractor's overall contract performance evaluation.

PART B: MISCELLANEOUS

1. The Contractor shall take notice that, if this solicitation requires the establishment of an **M/WBE** Utilization Plan, the resulting contract may be audited by DSBS to determine compliance with Section 6-129. See §6-129(e)(10). Furthermore, such resulting contract may also be examined by the City's Comptroller to assess compliance with the **M/WBE** Utilization Plan.

2. Pursuant to DSBS rules, construction contracts that include a requirement for an **M/WBE** Utilization Plan shall not be subject to the law governing Locally Based Enterprises set forth in Section 6-108.1 of the Administrative Code of the City of New York.

3. DSBS is available to assist contractors and potential contractors in determining the availability of MBEs and/or WBEs to participate as subcontractors, and in identifying opportunities that are appropriate for participation by MBEs and/or WBEs in contracts.

4. Prospective contractors are encouraged to enter into qualified joint venture agreements with MBEs and/or WBEs as defined by Section 6-129(c)(30).

5. By submitting a bid or proposal the Contractor hereby acknowledges its understanding of the M/WBE Program requirements set forth herein and the pertinent provisions of Section 6-129, and any rules promulgated thereunder, and if awarded this Contract, the Contractor hereby agrees to comply with the M/WBE Program requirements of this Contract and pertinent provisions of Section 6-129, and any rules promulgated thereunder, all of which shall be deemed to be material terms of this Contract. The Contractor hereby agrees to make all reasonable, good faith efforts to solicit and obtain the participation of MBEs and/or WBEs to meet the required **Participation Goals**.

ARTICLE II. ENFORCEMENT

1. If Agency determines that a bidder or proposer, as applicable, has, in relation to this procurement, violated Section 6-129 or the DSBS rules promulgated pursuant to Section 6-129, Agency may disqualify such bidder or proposer, as applicable, from competing for this Contract and the Agency may revoke such bidder's or proposer's prequalification status, if applicable.

2. Whenever Agency believes that the Contractor or a subcontractor is not in compliance with Section 6-129 or the DSBS rules promulgated pursuant to Section 6-129, or any provision of this Contract that implements Section 6-129, including, but not limited to any **M/WBE** Utilization Plan, Agency shall send a written notice to the Contractor describing the alleged noncompliance and offering the Contractor an opportunity to be heard. Agency shall then conduct an investigation to determine whether such Contractor or subcontractor is in compliance.

3. In the event that the Contractor has been found to have violated Section 6-129, the DSBS rules promulgated pursuant to Section 6-129, or any provision of this Contract that implements Section 6-129, including, but not limited to, any **M/WBE** Utilization Plan, Agency may determine that one of the following actions should be taken:

(a) entering into an agreement with the Contractor allowing the Contractor to cure the violation;
(b) revoking the Contractor's pre-qualification to bid or make proposals for future contracts;
(c) making a finding that the Contractor is in default of the Contract;
(d) terminating the Contract;
(e) declaring the Contractor to be in breach of Contract;
(f) withholding payment or reimbursement;
(g) determining not to renew the Contract;
(h) assessing actual and consequential damages;
(i) assessing liquidated damages or reducing fees, provided that liquidated damages may be based on amounts representing costs of delays in carrying out the purposes of the M/WBE Program, or in meeting the purposes of the Contract, the costs of meeting utilization goals through additional procurements, the administrative costs of investigation and enforcement, or other factors set forth in the Contract;
(j) exercising rights under the Contract to procure goods, services or construction from another contractor and charge the cost of such contract to the Contractor that has been found to be in noncompliance; or
(k) taking any other appropriate remedy.

4. If an **M/WBE** Utilization Plan has been submitted, and pursuant to this Article II, Section 3, the Contractor has been found to have failed to fulfill its **Participation Goals** contained in its **M/WBE** Utilization Plan or the **Participation Goals** as modified by Agency pursuant to Article I, Part A, Section 11, Agency may assess liquidated damages in the amount of ten percent (10%) of the difference between the dollar amount of work required to be awarded to MBE and/or WBE firms to meet the **Participation Goals** and the dollar amount the Contractor actually awarded and paid, and/or credited, to MBE and/or WBE firms. In view of the difficulty of accurately ascertaining the loss which the City will suffer by reason of Contractor's failure to meet the **Participation Goals**, the foregoing amount is hereby fixed and agreed as the liquidated damages that the City will suffer by reason of such failure, and not as a penalty. Agency may deduct and retain out of any monies which may become due under this Contract the amount of any such liquidated damages; and in case the amount which may become due under this Contract shall be less than the amount of liquidated damages suffered by the City, the Contractor shall be liable to pay the difference.

5. Whenever Agency has reason to believe that an MBE and/or WBE is not qualified for certification, or is participating in a contract in a manner that does not serve a commercially useful function (as defined in Section 6-129(c)(8)), or has violated any provision of Section 6- 129, Agency shall notify the Commissioner of DSBS who shall determine whether the certification of such business enterprise should be revoked.

6. Statements made in any instrument submitted to Agency pursuant to Section 6-129 shall be submitted under penalty of perjury and any false or misleading statement or omission shall be grounds for the application of any applicable criminal and/or civil penalties for perjury. The making of a false or fraudulent statement by an MBE and/or WBE in any instrument submitted pursuant to Section 6-129 shall, in addition, be grounds for revocation of its certification.

7. The Contractor's record in implementing its **M/WBE** Utilization Plan shall be a factor in the evaluation of its performance. Whenever Agency determines that a Contractor's compliance with an **M/WBE** Utilization Plan has been unsatisfactory, Agency shall, after consultation with the City Chief Procurement Officer, file an advice of caution form for inclusion in VENDEX as caution data.

IN WITNESS WHEREOF, the Commissioner, on behalf of the City of New York, and the Contractor, have executed this agreement in quadruplicate, two parts of which are to remain with the Commissioner, another to be filed with the Comptroller of the City, and the fourth to be delivered to the Contractor.

THE CITY OF NEW YORK

By: _____
Commissioner

Digitally signed by Jamie Torres-Springer
DN: cn=Jamie Torres-Springer, o=DDC, ou=Exec, email=torresspringerj@ddc.nyc.gov, c=US
Date: 2021.06.08 11:03:00 -04'00'

CONTRACTOR:

By: Richard Ocken _____
(Member of Firm or Officer of Corporation)

Title: President (of MLJ Officer in IPC Resiliency Partners)

(Where Contractor is a Corporation, add):
Attest:

_____
Secretary

(Seal)

_____

ACKNOWLEDGEMENT OF PRINCIPAL, IF A CORPORATION

State of _____ County of _____ ss:

On this _____ day of _____, _____, before me personally came _____ to me known who, being by me duly sworn did depose and say that he resides at _____ _____ that he is the _____ of the corporation described in and which executed the foregoing instrument; that he knows the seal of said corporation; that one of the seals affixed to said instrument is such seal; that it was so affixed by order of the directors of said corporation, and that he signed his name thereto by like order.

_____
Notary Public or Commissioner of Deeds

ACKNOWLEDGEMENT OF PRINCIPAL, IF A PARTNERSHIP

State of New York County of Queens ss:

On this 4th day of June, 2021, before me personally appeared Richard Ocken to me known, and known to me to be one of the members of the firm of IPC Resiliency Partners _____ described in and who executed the foregoing instrument; and he acknowledged to me that he executed the same as and for the act and deed of said firm.

_____
Notary Public or Commissioner of Deeds

JAMIE LOPRINZI
NOTARY PUBLIC, STATE OF NEW YORK
QUEENS COUNTY
LIC # 01LO6138413
COMM. EXP. 3/25/2022

ACKNOWLEDGEMENT OF PRINCIPAL, IF AN INDIVIDUAL

State of _____ County of _____ ss:

On this _____ day of _____, _____, before me personally appeared _____ to me known, and known to me to be the person described in and who executed the foregoing instrument; and acknowledged that he executed the same.

_____
Notary Public or Commissioner of Deeds

ACKNOWLEDGEMENT BY COMMISSIONER

State of _____ County of _____ ss:

On this _____ day of _____, _____, before me personally came _____ to me known, and known to be the Deputy Commissioner of the Department of Design and Construction of The City of New York, the person described as such in and who as such executed the foregoing instrument and acknowledged to me that he executed the same as Deputy Commissioner for the purposes therein mentioned.

_____
Notary Public or Commissioner of Deeds

A U T H O R I T Y

MAYOR'S CERTIFICATE NO. CBX DATED
BUDGET DIRECTOR'S CERTIFICATE NO. DATED

APPROPRIATION
COMMISSIONER'S CERTIFICATE

In conformity with the provisions of Section 6-101 of the Administrative Code of the City of New York, it is hereby certified that the estimated cost of the work, materials and supplies required by the within Contract, amounting to

One Billion, Two Hundred Seventy-Two Million, Two Hundred
Twenty-One Thousand, One Hundred

Dollars ($ 1,272,221,100.00)

is chargeable to the fund of the Department of Design and Construction entitled Code

Department of Design and Construction

I hereby certify that the specifications contained herein comply with the terms and conditions of the BUDGET.

Commissioner

COMPTROLLER'S CERTIFICATE

The City of New York

Pursuant to the provisions of Section 6-101 of the Administrative Code of the City of New York, I hereby certify that there remains unapplied and unexpended a balance of the above mentioned fund applicable to this Contract sufficient to pay the estimated expense of executing the same viz:

$

Comptroller

MAYOR'S CERTIFICATE OR CERTIFICATE OF THE DIRECTOR OF THE BUDGET

<u>Performance Bond #1 (Pages 100 to 103)</u>: Use if the total contract price is $5 Million Or Less. Performance Bond #1 has been approved by the U.S. Small Business Administration ("SBA") for participation in its Bond Guarantee Program.

PERFORMANCE BOND #1

KNOW ALL PERSONS BY THESE PRESENTS:,
That we, _____

_____

_____

hereinafter referred to as the "Principal,"
and, _____

_____

_____

hereinafter referred to as the "Surety" ("Sureties") are held and firmly bound to THE CITY OF NEW YORK, hereinafter referred to as the "City" or to its successors and assigns in the penal sum
of _____

_____

_____

($_____) Dollars, lawful money of the United States for the payment of which said sum of money well and truly to be made, we, and each of us, bind ourselves, our heirs, executors, administrators, successors and assigns, jointly and severally, firmly by these presents.

WHEREAS, the Principal is about to enter, or has entered, into a Contract in writing with the City for

_____

_____

a copy of which Contract is annexed to and hereby made a part of this bond as though herein set forth in full;

NOW, THEREFORE, the conditions of this obligation are such that if the Principal, his or its representatives or assigns, shall well and faithfully perform the said Contract and all modifications, amendments, additions and alterations thereto that may hereafter be made, according to its terms and its true intent and meaning, including repair and or replacement of defective work and guarantees of maintenance for the periods stated in the Contract, and shall fully indemnify and save harmless the City from all cost and damage which it may suffer by reason of the Principal's default of the Contract, and shall fully reimburse and repay the City for all outlay and expense which the City may incur in making

good any such default and shall protect the said City of New York against, and pay any and all amounts, damages, cost and judgments which may or shall be recovered against said City or its officers or agents or which the said City of New York may be called upon to pay any person or corporation by reason of any damages arising or growing out of the Principal's default of the Contract, then this obligation shall be null and void, otherwise to remain in full force and effect.

The Surety (Sureties), for value received, hereby stipulates and agrees, upon written notice from the City that the City has determined that the Principal is in default of the Contract, to (1) pay the City the cost to complete the contract as determined by the City in excess of the balance of the Contract held by the City, plus any damages or costs to which the City is entitled, up to the full amount of the above penal sum, (2) fully perform and complete the Work to be performed under the Contract, pursuant to the terms, conditions, and covenants thereof, or (3) tender a completion Contractor that is acceptable to the City. The Surety (Sureties) further agrees, at its option, either to notify the City that it elects to pay the city the cost of completion plus any applicable damages and costs under option (1) above, or to commence and diligently perform the Work specified in the Contract, including physical site work, within twenty-five (25) business days after written notice thereof from the City and, if the Surety elects to fully perform and complete the Work, then to complete all Work within the time set forth in the Contract or such other time as agreed to between the City and Surety in accordance with the Contract. If the Surety elects to tender payment pursuant to (1) above, then the Surety shall tender such amount within fifteen (15) business days notification from the City of the cost of completion. The Surety and the City reserve all rights and defenses each may have against the other; provided, however, that the Surety expressly agrees that its reservation of rights shall not provide a basis for non-performance of its obligation to pay the City the cost of completion, to commence and complete all Work as provided herein, or to tender a completion contractor.

The Surety (Sureties), for value received, for itself and its successors and assigns, hereby stipulates and agrees that the obligation of said Surety (Sureties) and its bond shall be in no way impaired or affected by any extension of time, modification, omission, addition, or change in or to the said Contract or the Work to be performed thereunder, or by any payment thereunder before the time required therein, or by any waiver of any provisions thereof, or any moneys due or to become due thereunder; and said Surety (Sureties) does hereby waive notice of any and all of such extensions, modifications, omissions, additions, changes, payments, and waivers, and hereby expressly stipulates and agrees that any and all things done and omitted to be done by and in relation to subcontractors shall have the same effect as to said Surety (Sureties) as though done or omitted to be done by or in relation to said Principal. Notwithstanding the above, if the City makes payments to the Principal before the time required by the contract that in the aggregate exceed $100,000 or 10% of the Contract price, whichever is less, and that have not become earned prior to the Principal being found to be in default, then all payments made to the Principal before the time required by the Contract shall be added to the remaining contract value available to be paid for the completion of the Contract as if such sums had not been paid to the Principal, but shall not provide a basis for non-performance of its obligation to pay the City the cost of completion, to commence and to complete all Work as provided herein, or to tender a completion contractor.

<u>Performance Bond #1 (Pages 100 to 103)</u>: Use if the total contract price is $5 Million Or Less. Performance Bond #1 has been approved by the U.S. Small Business Administration ("SBA") for participation in its Bond Guarantee Program.

IN WITNESS WHEREOF, The Principal and the Surety (Sureties) have hereunto set their hands and seals, and such of them as are corporations have caused their corporate seals to be hereunto affixed and these presents to be signed by their proper officers, this

_____ day of _____, 20_____.

(Seal)

_____(L.S.)
Principal

By:_____.

(Seal)
Surety

By:_____.
_____.

(Seal) Surety

By:_____.
_____.

(Seal) Surety

By:_____.
_____.

(Seal) Surety

By:_____.
_____.

(Seal) Surety

By:_____.

Bond Premium Rate _____.

Bond Premium Cost _____.

If the Contractor (Principal) is a partnership, the bond should be signed by each of the individuals who are partners.

If the Contractor (Principal) is a corporation, the bond should be signed in its correct corporate name by a duly authorized officer, agent, or attorney-in-fact.

There should be executed an appropriate number of counterparts of the bond corresponding to the number of counterparts of the Contract.

Performance Bond #1 (Pages 100 to 103): Use if the total contract price is $5 Million Or Less. Performance Bond #1 has been approved by the U.S. Small Business Administration ("SBA") for participation in its Bond Guarantee Program.

ACKNOWLEDGMENT OF PRINCIPAL IF A CORPORATION

State of _____ County of _____ ss:

On this _____ day of _____, 20_____ before me personally came _____,
to me known, who, being by me duly sworn did depose and say that he/she resides at _____
_____; that he/she is the _____
of the corporation described in and which executed the foregoing instrument; and that he/she signed his/her name to the foregoing instrument by order of the directors of said corporation as the duly authorized and binding act thereof.

_____
Notary Public or Commissioner of Deeds.

ACKNOWLEDGMENT OF PRINCIPAL IF A PARTNERSHIP

State of _____ County of _____ ss:

On this _____ day of _____, 20 _____ before me personally came _____,
to me known, who, being by me duly sworn did dispose and say that he/she resides at _____
_____; that he/she is _____ partner of _____, a limited/general partnership existing under the laws of the State of _____, the partnership described in and which executed the foregoing instrument; and that he/she signed his/her name to the foregoing instrument as the duly authorized and binding act of said partnership.

_____
Notary Public or Commissioner of Deeds.

ACKNOWLEDGMENT OF PRINCIPAL IF AN INDIVIDUAL

State of _____ County of _____ ss:

On this _____ day of _____, 20_____ before me personally came _____,
to me known, who,.being by me duly sworn did depose and say that he/she resides at _____
_____, and that he/she is the individual whose name is subscribed to the within instrument and acknowledged to me that by his/her signature on the instrument, said individual executed the instrument.

_____
Notary Public or Commissioner of Deeds

Each executed bond should be accompanied by: (a) appropriate acknowledgments of the respective parties; (b) appropriate duly certified copy of Power of Attorney or other certificate of authority where bond is executed by agent, officer or other representative of Principal or Surety; (c) a duly certified extract from By-Laws or resolutions of Surety under which Power of Attorney or other certificate of authority of its agent, officer or representative was issued, and (d) certified copy of latest published financial statement of assets and liabilities of Surety.

* * * * * * * *

Affix Acknowledgments and Justification of Sureties.

Performance Bond #2 (Pages 104 to 107): Use if the total contract price is more than $5 Million.

PERFORMANCE BOND #2

KNOW ALL PERSONS BY THESE PRESENTS:,
That we, IPC Resiliency Partners

1010 Northern Blvd., Suite 200, Great Neck, NY 11021

hereinafter referred to as the "Principal,"
and, Liberty Mutual Insurance Company, of 175 Berkeley St., Boston, MA 02116

Continental Casualty Company, of 151 N. Franklin Street, Chicago, IL 60606 and

Federal Insurance Company, of 202B Hall's Mill Road, P.O. Box 1650, Whitehouse Station, NJ 08889-1600

hereinafter referred to as the "Surety" ("Sureties") are held and firmly bound to THE CITY OF NEW YORK, hereinafter referred to as the "City" or to its successors and assigns in the penal sum
of

Six Hundred Thirty Six Million One Hundred Ten Thousand Five Hundred Fifty and 00/100

($ 636,110,550.00) Dollars, lawful money of the United States for the payment of which said sum of money well and truly to be made, we, and each of us, bind ourselves, our heirs, executors, administrators, successors and assigns, jointly and severally, firmly by these presents.

WHEREAS, the Principal is about to enter, or has entered, into a Contract in writing with the City for

FMS ID: SANDRESM1, E-PIN: 85021B0024001, DDC PIN: 8502021RC0001C, Installation of East Side Coastal Resiliency

from Montgomery Street to East 15th Street - Borough of Manhattan

a copy of which Contract is annexed to and hereby made a part of this bond as though herein set forth in full;

NOW, THEREFORE, the conditions of this obligation are such that if the Principal, his or its representatives or assigns, shall well and faithfully perform the said Contract and all modifications, amendments, additions and alterations thereto that may hereafter be made, according to its terms and its true intent and meaning, including repair and or replacement of defective work and guarantees of maintenance for the periods stated in the Contract, and shall fully indemnify and save harmless the City from all cost and damage which it may suffer by reason of the Principal's default of the Contract, and shall fully reimburse and repay the City for all outlay and expense which the City may incur in making

good any such default and shall protect the said City of New York against, and pay any and all amounts, damages, cost and judgments which may or shall be recovered against said City or its officers or agents or which the said City of New York may be called upon to pay any person or corporation by reason of any damages arising or growing out of the Principal's default of the Contract, then this obligation shall be null and void, otherwise to remain in full force and effect.

The Surety (Sureties), for value received, hereby stipulates and agrees, upon written notice from the City that the City has determined that the Principal is in default of the Contract, to either (1) pay the full amount of the above penal sum in complete discharge and exoneration of this bond and of all the liabilities of the Surety relating to this bond, or (2) fully perform and complete the Work to be performed under the Contract, pursuant to the terms, conditions, and covenants thereof. The Surety (Sureties) further agrees, at its option, either to tender the penal sum or to commence and diligently perform the Work specified in the Contract, including physical site work, within twenty-five (25) business days after written notice thereof from the City and to complete all Work within the time set forth in the Contract or such other time as agreed to between the City and Surety in accordance with the Contract. The Surety and the City reserve all rights and defenses each may have against the other; provided, however, that the Surety expressly agrees that its reservation of rights shall not provide a basis for non-performance of its obligation to commence and to complete all Work as provided herein.

The Surety (Sureties), for value received, for itself and its successors and assigns, hereby stipulates and agrees that the obligation of said Surety (Sureties) and its bond shall be in no way impaired or affected by any extension of time, modification, omission, addition, or change in or to the said Contract or the Work to be performed thereunder, or by any payment thereunder before the time required therein, or by any waiver of any provisions thereof, or by any assignment, subletting or other transfer thereof or of any Work to be performed or any moneys due or to become due thereunder; and said Surety (Sureties) does hereby waive notice of any and all of such extensions, modifications, omissions, additions, changes, payments, waivers, assignments, subcontracts and transfers, and hereby expressly stipulates and agrees that any and all things done and omitted to be done by and in relation to assignees, subcontractors, and other transferees shall have the same effect as to said Surety (Sureties) as though done or omitted to be done by or in relation to said Principal.

Performance Bond #2 (Pages 104 to 107): Use if the total contract price is more than $5 Million.

IN WITNESS WHEREOF, The Principal and the Surety (Sureties) have hereunto set their hands and seals, and such of them as are corporations have caused their corporate seals to be hereunto affixed and these presents to be signed by their proper officers, this

3rd day of June 20 21.

(Seal)

IPC Resiliency Partners (L.S.)
Principal

By: _____

(Seal)

Surety
Liberty Mutual Insurance Company

By: _____
Colette R Chisholm, Attorney-In-Fact

(Seal)

Surety
Continental Casualty Company

By: _____
Colette R Chisholm, Attorney-In-Fact

(Seal)

Surety
Federal Insurance Company

By: _____
Colette R Chisholm, Attorney-In-Fact

(Seal)

Surety

By: _____

(Seal)

Surety

By: _____

Bond Premium Rate $7.25 per thousand

Bond Premium Cost $9,219,906.00

If the Contractor (Principal) is a partnership, the bond should be signed by each of the individuals who are partners.

If the Contractor (Principal) is a corporation, the bond should be signed in its correct corporate name by a duly authorized officer, agent, or attorney-in-fact.

There should be executed an appropriate number of counterparts of the bond corresponding to the number of counterparts of the Contract.

Performance Bond #2 (Pages 104 to 107): Use if the total contract price is more than $5 Million.

ACKNOWLEDGMENT OF PRINCIPAL IF A CORPORATION

State of _____ County of _____ ss:

On this _____ day of _____, 20 _____ before me personally came _____, to me known, who, being by me duly sworn did depose and say that he resides at _____ _____ ; that he/she is the _____ of the corporation described in and which executed the foregoing instrument; that he/she signed his/her name to the foregoing instrument by order of the directors of said corporation as the duly authorized and binding act thereof.

_____
Notary Public or Commissioner of Deeds.

ACKNOWLEDGMENT OF PRINCIPAL IF A PARTNERSHIP

State of NEW YORK County of QUEENS ss:

On this 4th day of JUNE, 20 21 before me personally came RICHARD OCKEN, to me known, who, being by me duly sworn did depose and say that he/she resides at Manhattan, NY; that he/she is Managing partner of IPC Resiliency Partners, a limited/general partnership existing under the laws of the State of NEW YORK, the partnership described in and which executed the foregoing instrument; and that he/she signed his/her name to the foregoing instrument as the duly authorized and binding act of said partnership.

Jamie Loprinzi
Notary Public or Commissioner of Deeds

JAMIE LOPRINZI
NOTARY PUBLIC, STATE OF NEW YORK
QUEENS COUNTY
LIC # 01LO6138413
COMM. EXP. 3/25/2022

ACKNOWLEDGMENT OF PRINCIPAL IF AN INDIVIDUAL

State of _____ County of _____ ss:

On this _____ day of _____, 20_____ before me personally came _____, to me known, who, being by me duly sworn did depose and say that he/she resides at _____ _____, and that he/she is the individual whose name is subscribed to the within instrument and acknowledged to me that by his/her signature on the instrument, said individual executed the instrument.

_____
Notary Public or Commissioner of Deeds

Each executed bond should be accompanied by: (a) appropriate acknowledgments of the respective parties; (b) appropriate duly certified copy of Power of Attorney or other certificate of authority where bond is executed by agent, officer or other representative of Principal or Surety; (c) a duly certified extract from By-Laws or resolutions of Surety under which Power of Attorney or other certificate of authority of its agent, officer or representative was issued, and (d) certified copy of latest published financial statement of assets and liabilities of Surety.

* * * * * * * *

Affix Acknowledgments and Justification of Sureties.

ACKNOWLEDGMENT OF SURETY COMPANY

STATE OF New York } SS

COUNTY OF Nassau }

On this June 3, 2021, before me personally came Colette R. Chisholm to me known, who, being by me duly sworn, did depose and say; that he/she resides in New York County, State of New York that he/she is the Attorney-In-Fact of the Liberty Mutual Insurance Company, Continental Casualty Company and Federal Insurance Company

..... the corporations described in which executed the above instrument; that he/she knows the seal of said corporations; that the seal affixed to said instrument is such corporate seal; that is was so affixed by the Board of Directors of said corporations; and that he/she signed his/her name thereto by like order; and the affiant did further depose and say that the Superintendent of Insurance of the State of New York, has pursuant to Section 1111 of the Insurance Law of the State of New York, issued to Liberty Mutual Insurance Company, Continental Casualty Company and Federal Insurance Company

..... (Sureties) his/her certificate of qualification evidencing the qualification of said Companies and its sufficiency under any law of the State of New York as surety and guarantor, and the propriety of accepting and approving is as such; and that such certificate has not been revoked.

Notary Public

NY acknowledgement

CRISTINA PAGAN
Notary Public-State of New York
No. 01PA6389428
Qualified In Suffolk County
Commission Expires 3/25/2023

This Power of Attorney limits the acts of those named herein, and they have no authority to bind the Company except in the manner and to the extent herein stated.

Liberty Mutual Insurance Company
The Ohio Casualty Insurance Company
West American Insurance Company

Certificate No: **8200782-969603**

POWER OF ATTORNEY

KNOWN ALL PERSONS BY THESE PRESENTS: That The Ohio Casualty Insurance Company is a corporation duly organized under the laws of the State of New Hampshire, that Liberty Mutual Insurance Company is a corporation duly organized under the laws of the State of Massachusetts, and West American Insurance Company is a corporation duly organized under the laws of the State of Indiana (herein collectively called the "Companies"), pursuant to and by authority herein set forth, does hereby name, constitute and appoint, Colette R. Chisholm; Dana Granice; Susan Lupski; Robert T. Pearson; Katherine Acosta; Thomas Bean; George O. Brewster; Desiree Cardlin; Lee Ferrucci; Peter F. Jones; Rita Losquadro; Gerard S. Macholz; Camille Maitland; Nelly Renchiwich; Vincent A. Walsh; Michelle Wannamaker

all of the city of Uniondale state of NY each individually if there be more than one named, its true and lawful attorney-in-fact to make, execute, seal, acknowledge and deliver, for and on its behalf as surety and as its act and deed, any and all undertakings, bonds, recognizances and other surety obligations, in pursuance of these presents and shall be as binding upon the Companies as if they have been duly signed by the president and attested by the secretary of the Companies in their own proper persons.

IN WITNESS WHEREOF, this Power of Attorney has been subscribed by an authorized officer or official of the Companies and the corporate seals of the Companies have been affixed thereto this 26th day of March, 2019.

Liberty Mutual Insurance Company
The Ohio Casualty Insurance Company
West American Insurance Company

By: _____
David M. Carey, Assistant Secretary

State of PENNSYLVANIA
County of MONTGOMERY ss

On this 26th day of March, 2019 before me personally appeared David M. Carey, who acknowledged himself to be the Assistant Secretary of Liberty Mutual Insurance Company, The Ohio Casualty Company, and West American Insurance Company, and that he, as such, being authorized so to do, execute the foregoing instrument for the purposes therein contained by signing on behalf of the corporations by himself as a duly authorized officer.

IN WITNESS WHEREOF, I have hereunto subscribed my name and affixed my notarial seal at King of Prussia, Pennsylvania, on the day and year first above written.

COMMONWEALTH OF PENNSYLVANIA
Notarial Seal
Teresa Pastella, Notary Public
Upper Merion Twp., Montgomery County
My Commission Expires March 28, 2021
Member, Pennsylvania Association of Notaries

By: _____
Teresa Pastella, Notary Public

This Power of Attorney is made and executed pursuant to and by authority of the following By-laws and Authorizations of The Ohio Casualty Insurance Company, Liberty Mutual Insurance Company, and West American Insurance Company which resolutions are now in full force and effect reading as follows:

ARTICLE IV – OFFICERS: Section 12. Power of Attorney.
Any officer or other official of the Corporation authorized for that purpose in writing by the Chairman or the President, and subject to such limitation as the Chairman or the President may prescribe, shall appoint such attorneys-in-fact, as may be necessary to act in behalf of the Corporation to make, execute, seal, acknowledge and deliver as surety any and all undertakings, bonds, recognizances and other surety obligations. Such attorneys-in-fact, subject to the limitations set forth in their respective powers of attorney, shall have full power to bind the Corporation by their signature and execution of any such instruments and to attach thereto the seal of the Corporation. When so executed, such instruments shall be as binding as if signed by the President and attested to by the Secretary. Any power or authority granted to any representative or attorney-in-fact under the provisions of this article may be revoked at any time by the Board, the Chairman, the President or by the officer or officers granting such power or authority.

ARTICLE XIII – Execution of Contracts: Section 5. Surety Bonds and Undertakings.
Any officer of the Company authorized for that purpose in writing by the chairman or the president, and subject to such limitations as the chairman or the president may prescribe, shall appoint such attorneys-in-fact, as may be necessary to act in behalf of the Company to make, execute, seal, acknowledge and deliver as surety any and all undertakings, bonds, recognizances and other surety obligations. Such attorneys-in-fact subject to the limitations set forth in their respective powers of attorney, shall have full power to bind the Company by their signature and execution of any such instruments and to attach thereto the seal of the Company. When so executed such instruments shall be as binding as if signed by the president and attested by the secretary.

Certificate of Designation – The President of the Company, acting pursuant to the Bylaws of the Company, authorizes David M. Carey, Assistant Secretary to appoint such attorneys-in-fact as may be necessary to act on behalf of the Company to make, execute, seal, acknowledge and deliver as surety any and all undertakings, bonds, recognizances and other surety obligations.

Authorization – By unanimous consent of the Company's Board of Directors, the Company consents that facsimile or mechanically reproduced signature of any assistant secretary of the Company, wherever appearing upon a certified copy of any power of attorney issued by the Company in connection with surety bonds, shall be valid and binding upon the Company with the same force and effect as though manually affixed.

I, Renee C. Llewellyn, the undersigned, Assistant Secretary, The Ohio Casualty Insurance Company, Liberty Mutual Insurance Company, and West American Insurance Company do hereby certify that the original power of attorney of which the foregoing is a full, true and correct copy of the Power of Attorney executed by said Companies, is in full force and effect and has not been revoked.

IN TESTIMONY WHEREOF, I have hereunto set my hand and affixed the seals of said Companies this 3rd day of June, 2021.

By: _____
Renee C. Llewellyn, Assistant Secretary

Not valid for mortgage, note, loan, letter of credit, currency rate, interest rate or residual value guarantees.

To confirm the validity of this Power of Attorney call 1-610-832-8240 between 9:00 am and 4:30 pm EST on any business day.

Liberty Mutual SURETY

LIBERTY MUTUAL INSURANCE COMPANY

FINANCIAL STATEMENT — DECEMBER 31, 2020

Assets

Cash and Bank Deposits	$2,058,007,542
*Bonds — U.S Government	2,209,760,437
*Other Bonds	15,902,755,586
*Stocks	18,517,107,230
Real Estate	193,169,809
Agents' Balances or Uncollected Premiums	6,970,170,469
Accrued Interest and Rents	118,399,147
Other Admitted Assets	12,079,597,645
Total Admitted Assets	**$58,048,967,865**

Liabilities

Unearned Premiums		$8,448,706,991
Reserve for Claims and Claims Expense		23,879,216,613
Funds Held Under Reinsurance Treaties		343,068,613
Reserve for Dividends to Policyholders		1,192,716
Additional Statutory Reserve		77,397,000
Reserve for Commissions, Taxes and Other Liabilities		6,279,510,804
Total		**$39,029,092,737**
Special Surplus Funds	$178,155,102	
Capital Stock	10,000,075	
Paid in Surplus	10,945,045,214	
Unassigned Surplus	7,886,674,737	
Surplus to Policyholders		**19,019,875,128**
Total Liabilities and Surplus		**$58,048,967,865**

LIBERTY MUTUAL INSURANCE COMPANY INCORPORATED 1912 MASSACHUSETTS

* Bonds are stated at amortized or investment value; Stocks at Association Market Values.
The foregoing financial information is taken from Liberty Mutual Insurance Company's financial statement filed with the state of Massachusetts Department of Insurance.

I, TIM MIKOLAJEWSKI, Assistant Secretary of Liberty Mutual Insurance Company, do hereby certify that the foregoing is a true, and correct statement of the Assets and Liabilities of said Corporation, as of December 31, 2020, to the best of my knowledge and belief.

IN WITNESS WHEREOF, I have hereunto set my hand and affixed the seal of said Corporation at Seattle, Washington, this 25th day of March, 2021.

T A Mikolajewski

Assistant Secretary

POWER OF ATTORNEY APPOINTING INDIVIDUAL ATTORNEY-IN-FACT

Know All Men By These Presents, That Continental Casualty Company, an Illinois insurance company, National Fire Insurance Company of Hartford, an Illinois insurance company, and American Casualty Company of Reading, Pennsylvania, a Pennsylvania insurance company (herein called "the CNA Companies"), are duly organized and existing insurance companies having their principal offices in the City of Chicago, and State of Illinois, and that they do by virtue of the signatures and seals herein affixed hereby make, constitute and appoint

Camille Maitland, Gerard S Macholz, Susan Lupski, Robert T Pearson, Rita Losquadro, Thomas Bean, Desiree Cardlin, Vincent A Walsh, George O Brewster, Colette R Chisholm, Dana Granice, Michelle Wannamaker, Katherine Acosta, Individually

of Uniondale, NY, their true and lawful Attorney(s)-in-Fact with full power and authority hereby conferred to sign, seal and execute for and on their behalf bonds, undertakings and other obligatory instruments of similar nature

- In Unlimited Amounts -

and to bind them thereby as fully and to the same extent as if such instruments were signed by a duly authorized officer of their insurance companies and all the acts of said Attorney, pursuant to the authority hereby given is hereby ratified and confirmed.

This Power of Attorney is made and executed pursuant to and by authority of the By-Law and Resolutions, printed on the reverse hereof, duly adopted, as indicated, by the Boards of Directors of the insurance companies.

In Witness Whereof, the CNA Companies have caused these presents to be signed by their Vice President and their corporate seals to be hereto affixed on this 23rd day of March, 2020.

Continental Casualty Company
National Fire Insurance Company of Hartford
American Casualty Company of Reading, Pennsylvania

Paul T. Bruflat — Vice President

State of South Dakota, County of Minnehaha, ss:

On this 23rd day of March, 2020, before me personally came Paul T. Bruflat to me known, who, being by me duly sworn, did depose and say: that he resides in the City of Sioux Falls, State of South Dakota; that he is a Vice President of Continental Casualty Company, an Illinois insurance company, National Fire Insurance Company of Hartford, an Illinois insurance company, and American Casualty Company of Reading, Pennsylvania, a Pennsylvania insurance company described in and which executed the above instrument; that he knows the seals of said insurance companies; that the seals affixed to the said instrument are such corporate seals; that they were so affixed pursuant to authority given by the Boards of Directors of said insurance companies and that he signed his name thereto pursuant to like authority, and acknowledges same to be the act and deed of said insurance companies.

J. MOHR
NOTARY PUBLIC SOUTH DAKOTA

My Commission Expires June 23, 2021

J. Mohr — Notary Public

CERTIFICATE

I, D. Johnson, Assistant Secretary of Continental Casualty Company, an Illinois insurance company, National Fire Insurance Company of Hartford, an Illinois insurance company, and American Casualty Company of Reading, Pennsylvania, a Pennsylvania insurance company do hereby certify that the Power of Attorney herein above set forth is still in force, and further certify that the By-Law and Resolution of the Board of Directors of the insurance companies printed on the reverse hereof is still in force. In testimony whereof I have hereunto subscribed my name and affixed the seal of the said insurance companies this 3rd day of June, 2021.

Continental Casualty Company
National Fire Insurance Company of Hartford
American Casualty Company of Reading, Pennsylvania

D. Johnson — Assistant Secretary

Form F6853-4/2012

Go to www.cnasurety.com > Owner / Obligee Services > Validate Bond Coverage, if you want to verify bond authenticity.

Authorizing By-Laws and Resolutions

ADOPTED BY THE BOARD OF DIRECTORS OF CONTINENTAL CASUALTY COMPANY:

This Power of Attorney is made and executed pursuant to and by authority of the following resolution duly adopted by the Board of Directors of the Company at a meeting held on May 12, 1995:

"RESOLVED: That any Senior or Group Vice President may authorize an officer to sign specific documents, agreements and instruments on behalf of the Company provided that the name of such authorized officer and a description of the documents, agreements or instruments that such officer may sign will be provided in writing by the Senior or Group Vice President to the Secretary of the Company prior to such execution becoming effective."

This Power of Attorney is signed by Paul T. Bruflat, Vice President, who has been authorized pursuant to the above resolution to execute power of attorneys on behalf of Continental Casualty Company.

This Power of Attorney is signed and sealed by facsimile under and by the authority of the following Resolution adopted by the Board of Directors of the Company by unanimous written consent dated the 25th day of April, 2012:

"Whereas, the bylaws of the Company or specific resolution of the Board of Directors has authorized various officers (the "Authorized Officers")to execute various policies, bonds, undertakings and other obligatory instruments of like nature; and

Whereas, from time to time, the signature of the Authorized Officers, in addition to being provided in original, hard copy format, may be provided via facsimile or otherwise in an electronic format (collectively, "Electronic Signatures"); Now therefore be it resolved: that the Electronic Signature of any Authorized Officer shall be valid and binding on the Company. "

ADOPTED BY THE BOARD OF DIRECTORS OF NATIONAL FIRE INSURANCE COMPANY OF HARTFORD:

This Power of Attorney is made and executed pursuant to and by authority of the following resolution duly adopted by the Board of Directors of the Company by unanimous written consent dated May 10, 1995:

"RESOLVED: That any Senior or Group Vice President may authorize an officer to sign specific documents, agreements and instruments on behalf of the Company provided that the name of such authorized officer and a description of the documents, agreements or instruments that such officer may sign will be provided in writing by the Senior or Group Vice President to the Secretary of the Company prior to such execution becoming effective."

This Power of Attorney is signed by Paul T. Bruflat, Vice President, who has been authorized pursuant to the above resolution to execute power of attorneys on behalf of National Fire Insurance Company of Hartford.

This Power of Attorney is signed and sealed by facsimile under and by the authority of the following Resolution adopted by the Board of Directors of the Company by unanimous written consent dated the 25th day of April, 2012:

"Whereas, the bylaws of the Company or specific resolution of the Board of Directors has authorized various officers (the "Authorized Officers")to execute various policies, bonds, undertakings and other obligatory instruments of like nature; and

Whereas, from time to time, the signature of the Authorized Officers, in addition to being provided in original, hard copy format, may be provided via facsimile or otherwise in an electronic format (collectively, "Electronic Signatures"); Now therefore be it resolved: that the Electronic Signature of any Authorized Officer shall be valid and binding on the Company. "

ADOPTED BY THE BOARD OF DIRECTORS OF AMERICAN CASUALTY COMPANY OF READING, PENNSYLVANIA:

This Power of Attorney is made and executed pursuant to and by authority of the following resolution duly adopted by the Board of Directors of the Company by unanimous written consent dated May 10, 1995:

"RESOLVED: That any Senior or Group Vice President may authorize an officer to sign specific documents, agreements and instruments on behalf of the Company provided that the name of such authorized officer and a description of the documents, agreements or instruments that such officer may sign will be provided in writing by the Senior or Group Vice President to the Secretary of the Company prior to such execution becoming effective."

This Power of Attorney is signed by Paul T. Bruflat, Vice President, who has been authorized pursuant to the above resolution to execute power of attorneys on behalf of American Casualty Company of Reading, Pennsylvania.

This Power of Attorney is signed and sealed by facsimile under and by the authority of the following Resolution adopted by the Board of Directors of the Company by unanimous written consent dated the 25th day of April, 2012:

"Whereas, the bylaws of the Company or specific resolution of the Board of Directors has authorized various officers (the "Authorized Officers")to execute various policies, bonds, undertakings and other obligatory instruments of like nature; and

Whereas, from time to time, the signature of the Authorized Officers, in addition to being provided in original, hard copy format, may be provided via facsimile or otherwise in an electronic format (collectively, "Electronic Signatures"); Now therefore be it resolved: that the Electronic Signature of any Authorized Officer shall be valid and binding on the Company. "

CONTINENTAL CASUALTY COMPANY
Chicago, Illinois
Statement of Net Admitted Assets and Liabilities
December 31, 2020

ASSETS

Bonds	$	31,739,863,036
Stocks		5,477,910,817
Mortgage loans on real estate		1,061,159,487
Cash, cash equivalents, and short-term investments		1,084,081,751
Other invested assets		1,714,830,044
Receivables for securities		63,102,929
Investment income due and accrued		311,368,437
Premiums and considerations		2,180,568,451
Amounts recoverable from reinsurers		154,925,874
Funds held by or deposited with reinsured companies		6,015,575
Current federal and foreign income tax recoverable and interest thereon		15,339
Net deferred tax asset		516,818,788
Other assets		89,632,850
Total Assets	$	44,400,293,379

LIABILITIES AND SURPLUS

Losses	$	15,612,132,102
Loss adjustment expense		2,069,601,590
Other expenses (excluding taxes, license and fees)		687,108,534
Taxes, License and fees (excluding federal and foreign income taxes)		144,792,471
Federal and foreign income taxes payable		68,533,580
Unearned premiums		14,561,969,823
Ceded reinsurance premiums payable (net of ceding commissions)		671,624,983
Provision for reinsurance		81,488,652
Other liabilities		(204,576,740)
Total Liabilities	$	33,692,674,995

Surplus Account:			
Capital paid up	$ 35,632,565		
Gross paid in and contributed surplus	5,684,824,266		
Special Surplus	741,711,504		
Unassigned funds	4,245,450,049		
Surplus as regards policyholders		$	10,707,618,384
Total Liabilities and Capital		$	44,400,293,379

I, Julie Lee, Assistant Vice President of Continental Casualty Company hereby certify that the above is an accurate representation of the financial statement of the Company dated December 31, 2020, as filed with the various Insurance Departments and is a true and correct statement of the condition of Continental Casualty Company as of that date.

CONTINENTAL CASUALTY COMPANY

By Julie Lee
Assistant Vice President, External Reporting

Subscribed and sworn to me this 9 day of April 2021
My commission expires:

YOLANDA JIMENEZ
OFFICIAL SEAL
Notary Public, State of Illinois
My Commission Expires
September 24, 2025

By Yolanda Jimenez
Notary Public

CHUBB

Power of Attorney

Federal Insurance Company | Vigilant Insurance Company | Pacific Indemnity Company
Westchester Fire Insurance Company | ACE American Insurance Company

Know All by These Presents, that **FEDERAL INSURANCE COMPANY**, an Indiana corporation, **VIGILANT INSURANCE COMPANY**, a New York corporation, **PACIFIC INDEMNITY COMPANY**, a Wisconsin corporation, **WESTCHESTER FIRE INSURANCE COMPANY** and **ACE AMERICAN INSURANCE COMPANY** corporations of the Commonwealth of Pennsylvania, do each hereby constitute and appoint Katherine Acosta, Thomas Bean, George O. Brewster, Desiree Cardlin, Colette R. Chisholm, Dana Granice, Susan Lupski, Gerard S. Macholz, Camille Maitland, Robert T. Pearson, Nelly Renchiwich, Rita Losquadro, Vincent A. Walsh and Michelle Wannamaker of Uniondale, New York ----------

each as their true and lawful Attorney-in-Fact to execute under such designation in their names and to affix their corporate seals to and deliver for and on their behalf as surety thereon or otherwise, bonds and undertakings and other writings obligatory in the nature thereof (other than bail bonds) given or executed in the course of business, and any instruments amending or altering the same, and consents to the modification or alteration of any instrument referred to in said bonds or obligations.

In Witness Whereof, said **FEDERAL INSURANCE COMPANY, VIGILANT INSURANCE COMPANY, PACIFIC INDEMNITY COMPANY, WESTCHESTER FIRE INSURANCE COMPANY** and **ACE AMERICAN INSURANCE COMPANY** have each executed and attested these presents and affixed their corporate seals on this 8th day of **January, 2021.**

Dawn M. Chloros, Assistant Secretary

Stephen M. Haney, Vice President

STATE OF NEW JERSEY
County of Hunterdon ss.

On this 8th day of **January, 2021** before me, a Notary Public of New Jersey, personally came Dawn M. Chloros and Stephen M. Haney, to me known to be Assistant Secretary and Vice President, respectively, of FEDERAL INSURANCE COMPANY, VIGILANT INSURANCE COMPANY, PACIFIC INDEMNITY COMPANY, WESTCHESTER FIRE INSURANCE COMPANY and ACE AMERICAN INSURANCE COMPANY, the companies which executed the foregoing Power of Attorney, and the said Dawn M. Chloros and Stephen M. Haney, being by me duly sworn, severally and each for herself and himself did depose and say that they are Assistant Secretary and Vice President, respectively, of FEDERAL INSURANCE COMPANY, VIGILANT INSURANCE COMPANY, PACIFIC INDEMNITY COMPANY, WESTCHESTER FIRE INSURANCE COMPANY and ACE AMERICAN INSURANCE COMPANY and know the corporate seals thereof, that the seals affixed to the foregoing Power of Attorney are such corporate seals and were thereto affixed by authority of said Companies; and that their signatures as such officers were duly affixed and subscribed by like authority.

Notarial Seal

KATHERINE J. ADELAAR
NOTARY PUBLIC OF NEW JERSEY
No. 2316685
Commission Expires July 16, 2024

Notary Public

CERTIFICATION

Resolutions adopted by the Boards of Directors of FEDERAL INSURANCE COMPANY, VIGILANT INSURANCE COMPANY, and PACIFIC INDEMNITY COMPANY on August 30, 2016; WESTCHESTER FIRE INSURANCE COMPANY on December 11, 2006; and ACE AMERICAN INSURANCE COMPANY on March 20, 2009:

"RESOLVED, that the following authorizations relate to the execution, for and on behalf of the Company, of bonds, undertakings, recognizances, contracts and other written commitments of the Company entered into in the ordinary course of business (each a "Written Commitment"):

(1) Each of the Chairman, the President and the Vice Presidents of the Company is hereby authorized to execute any Written Commitment for and on behalf of the Company, under the seal of the Company or otherwise.

(2) Each duly appointed attorney-in-fact of the Company is hereby authorized to execute any Written Commitment for and on behalf of the Company, under the seal of the Company or otherwise, to the extent that such action is authorized by the grant of powers provided for in such person's written appointment as such attorney-in-fact.

(3) Each of the Chairman, the President and the Vice Presidents of the Company is hereby authorized, for and on behalf of the Company, to appoint in writing any person the attorney-in-fact of the Company with full power and authority to execute, for and on behalf of the Company, under the seal of the Company or otherwise, such Written Commitments of the Company as may be specified in such written appointment, which specification may be by general type or class of Written Commitments or by specification of one or more particular Written Commitments.

(4) Each of the Chairman, the President and the Vice Presidents of the Company is hereby authorized, for and on behalf of the Company, to delegate in writing to any other officer of the Company the authority to execute, for and on behalf of the Company, under the Company's seal or otherwise, such Written Commitments of the Company as are specified in such written delegation, which specification may be by general type or class of Written Commitments or by specification of one or more particular Written Commitments.

(5) The signature of any officer or other person executing any Written Commitment or appointment or delegation pursuant to this Resolution, and the seal of the Company, may be affixed by facsimile on such Written Commitment or written appointment or delegation.

FURTHER RESOLVED, that the foregoing Resolution shall not be deemed to be an exclusive statement of the powers and authority of officers, employees and other persons to act for and on behalf of the Company, and such Resolution shall not limit or otherwise affect the exercise of any such power or authority otherwise validly granted or vested."

I, Dawn M. Chloros, Assistant Secretary of FEDERAL INSURANCE COMPANY, VIGILANT INSURANCE COMPANY, PACIFIC INDEMNITY COMPANY, WESTCHESTER FIRE INSURANCE COMPANY and ACE AMERICAN INSURANCE COMPANY (the "Companies") do hereby certify that

(i) the foregoing Resolutions adopted by the Board of Directors of the Companies are true, correct and in full force and effect,
(ii) the foregoing Power of Attorney is true, correct and in full force and effect.

Given under my hand and seals of said Companies at Whitehouse Station, NJ, this June 3, 2021

Dawn M. Chloros, Assistant Secretary

IN THE EVENT YOU WISH TO VERIFY THE AUTHENTICITY OF THIS BOND OR NOTIFY US OF ANY OTHER MATTER, PLEASE CONTACT US AT:
Telephone (908) 903- 3493 Fax (908) 903- 3656 e-mail: surety@chubb.com

FEDERAL INSURANCE COMPANY

STATEMENT OF ASSETS, LIABILITIES AND SURPLUS TO POLICYHOLDERS

Statutory Basis

December 31, 2020

(in thousands)

ASSETS		*LIABILITIES AND SURPLUS TO POLICYHOLDERS*	
Cash and Short Term Investments	$ (247,647)	Outstanding Losses and Loss Expenses	$ 7,823,012
United States Government, State and Municipal Bonds	4,277,332	Reinsurance Payable on Losses and Expenses	1,421,176
Other Bonds	5,455,272	Unearned Premiums	2,145,775
Stocks	567,832	Ceded Reinsurance Premiums Payable	261,276
Other Invested Assets	1,207,053	Other Liabilities	551,641
TOTAL INVESTMENTS	11,259,842	TOTAL LIABILITIES	12,202,880
Investments in Affiliates:		Capital Stock	20,980
Great Northern Ins. Co.	404,889	Paid-In Surplus	2,711,474
Vigilant Ins. Co.	349,615	Unassigned Funds	1,591,718
Chubb Indemnity Ins. Co.	182,191		
Chubb National Ins. Co.	186,189	SURPLUS TO POLICYHOLDERS	4,324,172
Other Affiliates	98,826		
Premiums Receivable	1,634,609		
Other Assets	2,410,891		
TOTAL ADMITTED ASSETS	$ 16,527,052	TOTAL LIABILITIES AND SURPLUS	$ 16,527,052

Investments are valued in accordance with requirements of the National Association of Insurance Commissioners, At December 31, 2020, investments with a carrying value of 507,794,700 were deposited with government authorities as required by law.

STATE OF PENNSYLVANIA

COUNTY OF PHILADELPHIA

John Taylor, being duly sworn, says that he is Senior Vice President of Federal Insurance Company and that to the best of his knowledge and belief the foregoing is a true and correct statement of the said Company's financial condition as of the 31 st day of December, 2020.

Sworn before me this April 7 2021

Docusigned by:

3FB04DA77...

Senior Vice President

Notary Public

August 8, 2023
My commission expires

Commonwealth of Pennsylvania - Notary Seal
Diane Wright, Notary Public
Philadelphia County
My commission expires August 8, 2023
Commission number 1235745
Member, Pennsylvania Association of Notaries

Payment Bond (Pages 108 to 111): Use for any contract for which a Payment Bond is required.

PAYMENT BOND

KNOW ALL PERSONS BY THESE PRESENTS, That we,

IPC Resiliency Partners

1010 Northern Blvd., Suite 200, Great Neck, NY 11021

hereinafter referred to as the "Principal", and

Liberty Mutual Insurance Company, of 175 Berkeley St., Boston, MA 02116

Continental Casualty Company, of 151 N. Franklin Street, Chicago, IL 60606 and

Federal Insurance Company, 202B Hall's Mill Road, P.O. Box 1650, Whitehouse Station, NJ 08889-1600

hereinafter referred to as the "Surety" ("Sureties") are held and firmly bound to THE CITY OF NEW YORK, hereinafter referred to as the "City" or to its successors and assigns, in the penal sum of

One Billion Two Hundred Seventy Two Million Two Hundred Twenty One Thousand One Hundred

and 00/100

($1,272,221,100.00) Dollars, lawful money of the United States, for the payment of which said sum of money well and truly to be made, we, and each of us, bind ourselves, our heirs, executors, administrators, successors and assigns, jointly and severally, firmly by these presents.

WHEREAS, the Principal is about to enter, or has entered, into a Contract in writing with the City for

FMS ID: SANDRESM1, E-PIN: 85021B0024001, DDC PIN: 8502021RC0001C, Installation of East Side Coastal Resiliency

from Montgomery Street to East 15th Street - Borough of Manhattan

a copy of which Contract is annexed to and hereby made a part of this bond as though herein set forth in full;

NOW, THEREFORE, the conditions of this obligation are such that if the Principal, his or its representatives or assigns and other Subcontractors to whom Work under this Contract is sublet and his or their successors and assigns shall promptly pay or cause to be paid all lawful claims for

(a) Wages and compensation for labor performed and services rendered by all persons engaged in the prosecution of the Work under said Contract, and any amendment or extension thereof or addition thereto, whether such persons be agents servants or employees of the Principal or any such Subcontractor, including all persons so engaged who perform the work of laborers or mechanics at or in the vicinity of the site

of the Project regardless of any contractual relationship between the Principal or such Subcontractors, or his or their successors or assigns, on the one hand and such laborers or mechanics on the other, but not including office employees not regularly stationed at the site of the project; and

(b) Materials and supplies (whether incorporated in the permanent structure or not), as well as teams, fuels, oils, implements or machinery furnished, used or consumed by said Principal or any subcontractor at or in the vicinity of the site of the Project in the prosecution of the Work under said Contract and any amendment or extension thereof or addition thereto; then this obligation shall be void, otherwise to remain in full force and effect.

This bond is subject to the following additional conditions, limitations and agreements:

(a) The Principal and Surety (Sureties) agree that this bond shall be for the benefit of any materialmen or laborer having a just claim, as well as the City itself.

(b) All persons who have performed labor, rendered services or furnished materials and supplies, as aforesaid, shall have a direct right of action against the Principal and his, its or their successors and assigns, and the Surety (Sureties) herein, or against either or both or any of them and their successors and assigns. Such persons may sue in their own name, and may prosecute the suit to judgment and execution without the necessity of joining with any other persons as party plaintiff.

(c) The Principal and Surety (Sureties) agree that neither of them will hold the City liable for any judgment for costs of otherwise, obtained by either or both of them against a laborer or materialman in a suit brought by either a laborer or materialman under this bond for moneys allegedly due for performing work or furnishing material.

(d) The Surety (Sureties) or its successors and assigns shall not be liable for any compensation recoverable by an employee or laborer under the Workmen's Compensation Law.

(e) In no event shall the Surety (Sureties), or its successors or assigns, be liable for a greater sum than the penalty of this bond or be subject to any suit, action or proceeding hereon that is instituted by any person, firm, or corporation hereunder later than two years after the complete performance of said Contract and final settlement thereof.

The Principal, for himself and his successors and assigns, and the Surety (Sureties), for itself and its successors and assigns, do hereby expressly waive any objection that might be interposed as to the right of the City to require a bond containing the foregoing provisions, and they do hereby further expressly waive any defense which they or either of them might interpose to an action brought hereon by any person, firm or corporation, including subcontractors, materialmen and third persons, for work, labor, services, supplies or material performed rendered, or furnished as aforesaid upon the ground that there is no law authorizing the City to require the foregoing provisions to be place in this bond.

And the Surety (Sureties), for value received, for itself and its successors and assigns, hereby stipulates and agrees that the obligation of said Surety (Sureties), and its bonds shall be in no way impaired or affected by any extension of time, modification, omission, addition, or change in or of the said Contract or the work to be performed thereunder, or by any payment thereunder before the time required therein, or by any waiver of any provisions thereof, or by any assignment, subletting or other transfer thereof or of any part thereof, or of any Work to be performed, or any moneys due to become due thereunder and said Surety (Sureties) does hereby waive notice of any and all of such extensions, modifications, omissions, additions, changes, payments, waivers, assignments, subcontracts and transfers, and hereby expressly stipulates and agrees that any and all things done and omitted to be done by and in relation to assignees, Subcontractors, and other transferees shall have the same effect as to said Surety (Sureties) as though done or omitted to be done or in relation to said Principal.

Payment Bond (Pages 108 to 111): Use for any contract for which a Payment Bond is required.

IN WITNESS WHEREOF, the Principal and the Surety (Sureties) have hereunto set their hands and seals, and such of them as are corporations have caused their corporate seals to be hereunto affixed and these presents to be signed by their proper officers, this 3rd day of June, 2021.

(Seal) IPC Resiliency Partners (L.S.)
Principal
By: _____

(Seal) Liberty Mutual Insurance Company
Surety
By: _____
Colette R. Chisholm, Attorney-In-Fact

(Seal) Continental Casualty Company
Surety
By: _____
Colette R. Chisholm, Attorney-In-Fact

(Seal) Federal Insurance Company
Surety
By: _____
Colette R. Chisholm, Attorney-In-Fact

(Seal) _____
Surety
By: _____

If the Contractor (Principal) is a partnership, the bond should be signed by each of the individuals who are partners.

If the Contractor (Principal) is a corporation, the bond should be signed in its correct corporate name by a duly authorized officer, agent, or attorney-in-fact.

There should be executed an appropriate number of counterparts of the bond corresponding to the number of counterparts of the Contract.

Payment Bond (Pages 108 to 111): Use for any contract for which a Payment Bond is required.

ACKNOWLEDGMENT OF PRINCIPAL, IF A CORPORATION

State of _____ County of _____ ss:

On this _____ day of _____, _____, before me personally came _____ to me known, who, being by me duly sworn did depose and say that he resides at _____ _____ that he is the _____ of the corporation described in and which executed the foregoing instrument; that he knows the seal of said corporation; that one of the seals affixed to said instrument is such seal; that it was so affixed by order of the directors of said corporation, and that he signed his name thereto by like order.

_____
Notary Public or Commissioner of Deeds

ACKNOWLEDGMENT OF PRINCIPAL, IF A PARTNERSHIP

State of NEW YORK County of QUEENS ss:

On this 4th day of JUNE, 2021, before me personally appeared RICHARD OCKEN to me known, and known to me to be one of the members of the firm of IPC RESILIENCY PARTNERS _____ described in and who executed the foregoing instrument; and he acknowledged to me that he executed the same as and for the act and deed of said firm.

Jamie Loprinzi
Notary Public or Commissioner of Deeds

JAMIE LOPRINZI
NOTARY PUBLIC, STATE OF NEW YORK
QUEENS COUNTY
LIC # 01LO6138413
COMM. EXP. 3/25/2022

ACKNOWLEDGMENT OF PRINCIPAL, IF AN INDIVIDUAL

State of _____ County of _____ ss:

On this _____ day of _____, _____, before me personally appeared _____ to me known, and known to me to be the person described in and who executed the foregoing instrument; and acknowledged that he executed the same.

_____
Notary Public or Commissioner of Deeds

Each executed bond should be accompanied by: (a) appropriate acknowledgments of the respective parties; (b) appropriate duly certified copy of Power of Attorney or other certificate of authority where bond is executed by agent, officer or other representative of Principal or Surety; (c) a duly certified extract from By-Laws or resolutions of Surety under which Power of Attorney or other certificate of authority of its agent, officer or representative was issued, and (d) certified copy of latest published financial statement of assets and liabilities of Surety.

* * * * * * * *

Affix Acknowledgments and Justification of Sureties.

ACKNOWLEDGMENT OF SURETY COMPANY

STATE OF New York } SS

COUNTY OF Nassau }

On this June 3, 2021, before me personally came Colette R. Chisholm to me known, who, being by me duly sworn, did depose and say; that he/she resides in New York County, State of New York that he/she is the Attorney-In-Fact of the Liberty Mutual Insurance Company, Continental Casualty Company and Federal Insurance Company

..... the corporations described in which executed the above instrument; that he/she knows the seal of said corporations; that the seal affixed to said instrument is such corporate seal; that is was so affixed by the Board of Directors of said corporations; and that he/she signed his/her name thereto by like order; and the affiant did further depose and say that the Superintendent of Insurance of the State of New York, has pursuant to Section 1111 of the Insurance Law of the State of New York, issued to Liberty Mutual Insurance Company, Continental Casualty Company and Federal Insurance Company

..... (Sureties) his/her certificate of qualification evidencing the qualification of said Companies and its sufficiency under any law of the State of New York as surety and guarantor, and the propriety of accepting and approving is as such; and that such certificate has not been revoked.

Notary Public

NY acknowledgement

CRISTINA PAGAN
Notary Public-State of New York
No. 01PA6389428
Qualified in Suffolk County
Commission Expires 3/25/2023

This Power of Attorney limits the acts of those named herein, and they have no authority to bind the Company except in the manner and to the extent herein stated.

Liberty Mutual Insurance Company
The Ohio Casualty Insurance Company
West American Insurance Company

Certificate No: **8200782-969603**

POWER OF ATTORNEY

KNOWN ALL PERSONS BY THESE PRESENTS: That The Ohio Casualty Insurance Company is a corporation duly organized under the laws of the State of New Hampshire, that Liberty Mutual Insurance Company is a corporation duly organized under the laws of the State of Massachusetts, and West American Insurance Company is a corporation duly organized under the laws of the State of Indiana (herein collectively called the "Companies"), pursuant to and by authority herein set forth, does hereby name, constitute and appoint, Colette R. Chisholm; Dana Granice; Susan Lupski; Robert T. Pearson; Katherine Acosta; Thomas Bean; George O. Brewster; Desiree Cardlin; Lee Ferrucci; Peter F. Jones; Rita Losquadro; Gerard S. Macholz; Camille Maitland; Nelly Renchiwich; Vincent A. Walsh; Michelle Wannamaker

all of the city of Uniondale state of NY each individually if there be more than one named, its true and lawful attorney-in-fact to make, execute, seal, acknowledge and deliver, for and on its behalf as surety and as its act and deed, any and all undertakings, bonds, recognizances and other surety obligations, in pursuance of these presents and shall be as binding upon the Companies as if they have been duly signed by the president and attested by the secretary of the Companies in their own proper persons.

IN WITNESS WHEREOF, this Power of Attorney has been subscribed by an authorized officer or official of the Companies and the corporate seals of the Companies have been affixed thereto this 26th day of March, 2019.

Liberty Mutual Insurance Company
The Ohio Casualty Insurance Company
West American Insurance Company

By: _____
David M. Carey, Assistant Secretary

State of PENNSYLVANIA
County of MONTGOMERY ss

On this 26th day of March, 2019 before me personally appeared David M. Carey, who acknowledged himself to be the Assistant Secretary of Liberty Mutual Insurance Company, The Ohio Casualty Company, and West American Insurance Company, and that he, as such, being authorized so to do, execute the foregoing instrument for the purposes therein contained by signing on behalf of the corporations by himself as a duly authorized officer.

IN WITNESS WHEREOF, I have hereunto subscribed my name and affixed my notarial seal at King of Prussia, Pennsylvania, on the day and year first above written.

COMMONWEALTH OF PENNSYLVANIA
Notarial Seal
Teresa Pastella, Notary Public
Upper Merion Twp., Montgomery County
My Commission Expires March 28, 2021
Member, Pennsylvania Association of Notaries

By: _____
Teresa Pastella, Notary Public

This Power of Attorney is made and executed pursuant to and by authority of the following By-laws and Authorizations of The Ohio Casualty Insurance Company, Liberty Mutual Insurance Company, and West American Insurance Company which resolutions are now in full force and effect reading as follows:

ARTICLE IV – OFFICERS: Section 12. Power of Attorney.
Any officer or other official of the Corporation authorized for that purpose in writing by the Chairman or the President, and subject to such limitation as the Chairman or the President may prescribe, shall appoint such attorneys-in-fact, as may be necessary to act in behalf of the Corporation to make, execute, seal, acknowledge and deliver as surety any and all undertakings, bonds, recognizances and other surety obligations. Such attorneys-in-fact, subject to the limitations set forth in their respective powers of attorney, shall have full power to bind the Corporation by their signature and execution of any such instruments and to attach thereto the seal of the Corporation. When so executed, such instruments shall be as binding as if signed by the President and attested to by the Secretary. Any power or authority granted to any representative or attorney-in-fact under the provisions of this article may be revoked at any time by the Board, the Chairman, the President or by the officer or officers granting such power or authority.

ARTICLE XIII – Execution of Contracts: Section 5. Surety Bonds and Undertakings.
Any officer of the Company authorized for that purpose in writing by the chairman or the president, and subject to such limitations as the chairman or the president may prescribe, shall appoint such attorneys-in-fact, as may be necessary to act in behalf of the Company to make, execute, seal, acknowledge and deliver as surety any and all undertakings, bonds, recognizances and other surety obligations. Such attorneys-in-fact subject to the limitations set forth in their respective powers of attorney, shall have full power to bind the Company by their signature and execution of any such instruments and to attach thereto the seal of the Company. When so executed such instruments shall be as binding as if signed by the president and attested by the secretary.

Certificate of Designation – The President of the Company, acting pursuant to the Bylaws of the Company, authorizes David M. Carey, Assistant Secretary to appoint such attorneys-in-fact as may be necessary to act on behalf of the Company to make, execute, seal, acknowledge and deliver as surety any and all undertakings, bonds, recognizances and other surety obligations.

Authorization – By unanimous consent of the Company's Board of Directors, the Company consents that facsimile or mechanically reproduced signature of any assistant secretary of the Company, wherever appearing upon a certified copy of any power of attorney issued by the Company in connection with surety bonds, shall be valid and binding upon the Company with the same force and effect as though manually affixed.

I, Renee C. Llewellyn, the undersigned, Assistant Secretary, The Ohio Casualty Insurance Company, Liberty Mutual Insurance Company, and West American Insurance Company do hereby certify that the original power of attorney of which the foregoing is a full, true and correct copy of the Power of Attorney executed by said Companies, is in full force and effect and has not been revoked.

IN TESTIMONY WHEREOF, I have hereunto set my hand and affixed the seals of said Companies this 3rd day of June, 2021.

By: _____
Renee C. Llewellyn, Assistant Secretary

Not valid for mortgage, note, loan, letter of credit, currency rate, interest rate or residual value guarantees.

To confirm the validity of this Power of Attorney call 1-610-832-8240 between 9:00 am and 4:30 pm EST on any business day.

Liberty Mutual. SURETY

LIBERTY MUTUAL INSURANCE COMPANY

FINANCIAL STATEMENT — DECEMBER 31, 2020

Assets

Cash and Bank Deposits	$2,058,007,542
*Bonds — U.S Government	2,209,760,437
*Other Bonds	15,902,755,586
*Stocks	18,517,107,230
Real Estate	193,169,809
Agents' Balances or Uncollected Premiums	6,970,170,469
Accrued Interest and Rents	118,399,147
Other Admitted Assets	12,079,597,645
Total Admitted Assets	**$58,048,967,865**

Liabilities

Unearned Premiums		$8,448,706,991
Reserve for Claims and Claims Expense		23,879,216,613
Funds Held Under Reinsurance Treaties		343,068,613
Reserve for Dividends to Policyholders		1,192,716
Additional Statutory Reserve		77,397,000
Reserve for Commissions, Taxes and Other Liabilities		6,279,510,804
Total		**$39,029,092,737**
Special Surplus Funds	$178,155,102	
Capital Stock	10,000,075	
Paid in Surplus	10,945,045,214	
Unassigned Surplus	7,886,674,737	
Surplus to Policyholders		**19,019,875,128**
Total Liabilities and Surplus		**$58,048,967,865**

LIBERTY MUTUAL INSURANCE COMPANY INCORPORATED 1912 MASSACHUSETTS

* Bonds are stated at amortized or investment value; Stocks at Association Market Values.
The foregoing financial information is taken from Liberty Mutual Insurance Company's financial statement filed with the state of Massachusetts Department of Insurance.

I, TIM MIKOLAJEWSKI, Assistant Secretary of Liberty Mutual Insurance Company, do hereby certify that the foregoing is a true, and correct statement of the Assets and Liabilities of said Corporation, as of December 31, 2020, to the best of my knowledge and belief.

IN WITNESS WHEREOF, I have hereunto set my hand and affixed the seal of said Corporation at Seattle, Washington, this 25th day of March, 2021.

T A Mikolajewski

Assistant Secretary

POWER OF ATTORNEY APPOINTING INDIVIDUAL ATTORNEY-IN-FACT

Know All Men By These Presents, That Continental Casualty Company, an Illinois insurance company, National Fire Insurance Company of Hartford, an Illinois insurance company, and American Casualty Company of Reading, Pennsylvania, a Pennsylvania insurance company (herein called "the CNA Companies"), are duly organized and existing insurance companies having their principal offices in the City of Chicago, and State of Illinois, and that they do by virtue of the signatures and seals herein affixed hereby make, constitute and appoint

Camille Maitland, Gerard S Macholz, Susan Lupski, Robert T Pearson, Rita Losquadro, Thomas Bean, Desiree Cardlin, Vincent A Walsh, George O Brewster, Colette R Chisholm, Dana Granice, Michelle Wannamaker, Katherine Acosta, Individually

of Uniondale, NY, their true and lawful Attorney(s)-in-Fact with full power and authority hereby conferred to sign, seal and execute for and on their behalf bonds, undertakings and other obligatory instruments of similar nature

- In Unlimited Amounts -

and to bind them thereby as fully and to the same extent as if such instruments were signed by a duly authorized officer of their insurance companies and all the acts of said Attorney, pursuant to the authority hereby given is hereby ratified and confirmed.

This Power of Attorney is made and executed pursuant to and by authority of the By-Law and Resolutions, printed on the reverse hereof, duly adopted, as indicated, by the Boards of Directors of the insurance companies.

In Witness Whereof, the CNA Companies have caused these presents to be signed by their Vice President and their corporate seals to be hereto affixed on this 23rd day of March, 2020.

Continental Casualty Company
National Fire Insurance Company of Hartford
American Casualty Company of Reading, Pennsylvania

Paul T. Bruflat — Vice President

State of South Dakota, County of Minnehaha, ss:

On this 23rd day of March, 2020, before me personally came Paul T. Bruflat to me known, who, being by me duly sworn, did depose and say: that he resides in the City of Sioux Falls, State of South Dakota; that he is a Vice President of Continental Casualty Company, an Illinois insurance company, National Fire Insurance Company of Hartford, an Illinois insurance company, and American Casualty Company of Reading, Pennsylvania, a Pennsylvania insurance company described in and which executed the above instrument; that he knows the seals of said insurance companies; that the seals affixed to the said instrument are such corporate seals; that they were so affixed pursuant to authority given by the Boards of Directors of said insurance companies and that he signed his name thereto pursuant to like authority, and acknowledges same to be the act and deed of said insurance companies.

J. MOHR
NOTARY PUBLIC SOUTH DAKOTA

My Commission Expires June 23, 2021

J. Mohr — Notary Public

CERTIFICATE

I, D. Johnson, Assistant Secretary of Continental Casualty Company, an Illinois insurance company, National Fire Insurance Company of Hartford, an Illinois insurance company, and American Casualty Company of Reading, Pennsylvania, a Pennsylvania insurance company do hereby certify that the Power of Attorney herein above set forth is still in force, and further certify that the By-Law and Resolution of the Board of Directors of the insurance companies printed on the reverse hereof is still in force. In testimony whereof I have hereunto subscribed my name and affixed the seal of the said insurance companies this 3rd day of June, 2021.

Continental Casualty Company
National Fire Insurance Company of Hartford
American Casualty Company of Reading, Pennsylvania

D. Johnson — Assistant Secretary

Form F6853-4/2012

Go to www.cnasurety.com > Owner / Obligee Services > Validate Bond Coverage, if you want to verify bond authenticity.

Authorizing By-Laws and Resolutions

ADOPTED BY THE BOARD OF DIRECTORS OF CONTINENTAL CASUALTY COMPANY:

This Power of Attorney is made and executed pursuant to and by authority of the following resolution duly adopted by the Board of Directors of the Company at a meeting held on May 12, 1995:

"RESOLVED: That any Senior or Group Vice President may authorize an officer to sign specific documents, agreements and instruments on behalf of the Company provided that the name of such authorized officer and a description of the documents, agreements or instruments that such officer may sign will be provided in writing by the Senior or Group Vice President to the Secretary of the Company prior to such execution becoming effective."

This Power of Attorney is signed by Paul T. Bruflat, Vice President, who has been authorized pursuant to the above resolution to execute power of attorneys on behalf of Continental Casualty Company.

This Power of Attorney is signed and sealed by facsimile under and by the authority of the following Resolution adopted by the Board of Directors of the Company by unanimous written consent dated the 25th day of April, 2012:

"Whereas, the bylaws of the Company or specific resolution of the Board of Directors has authorized various officers (the "Authorized Officers")to execute various policies, bonds, undertakings and other obligatory instruments of like nature; and

Whereas, from time to time, the signature of the Authorized Officers, in addition to being provided in original, hard copy format, may be provided via facsimile or otherwise in an electronic format (collectively, "Electronic Signatures"); Now therefore be it resolved: that the Electronic Signature of any Authorized Officer shall be valid and binding on the Company. "

ADOPTED BY THE BOARD OF DIRECTORS OF NATIONAL FIRE INSURANCE COMPANY OF HARTFORD:

This Power of Attorney is made and executed pursuant to and by authority of the following resolution duly adopted by the Board of Directors of the Company by unanimous written consent dated May 10, 1995:

"RESOLVED: That any Senior or Group Vice President may authorize an officer to sign specific documents, agreements and instruments on behalf of the Company provided that the name of such authorized officer and a description of the documents, agreements or instruments that such officer may sign will be provided in writing by the Senior or Group Vice President to the Secretary of the Company prior to such execution becoming effective."

This Power of Attorney is signed by Paul T. Bruflat, Vice President, who has been authorized pursuant to the above resolution to execute power of attorneys on behalf of National Fire Insurance Company of Hartford.

This Power of Attorney is signed and sealed by facsimile under and by the authority of the following Resolution adopted by the Board of Directors of the Company by unanimous written consent dated the 25th day of April, 2012:

"Whereas, the bylaws of the Company or specific resolution of the Board of Directors has authorized various officers (the "Authorized Officers")to execute various policies, bonds, undertakings and other obligatory instruments of like nature; and

Whereas, from time to time, the signature of the Authorized Officers, in addition to being provided in original, hard copy format, may be provided via facsimile or otherwise in an electronic format (collectively, "Electronic Signatures"); Now therefore be it resolved: that the Electronic Signature of any Authorized Officer shall be valid and binding on the Company. "

ADOPTED BY THE BOARD OF DIRECTORS OF AMERICAN CASUALTY COMPANY OF READING, PENNSYLVANIA:

This Power of Attorney is made and executed pursuant to and by authority of the following resolution duly adopted by the Board of Directors of the Company by unanimous written consent dated May 10, 1995:

"RESOLVED: That any Senior or Group Vice President may authorize an officer to sign specific documents, agreements and instruments on behalf of the Company provided that the name of such authorized officer and a description of the documents, agreements or instruments that such officer may sign will be provided in writing by the Senior or Group Vice President to the Secretary of the Company prior to such execution becoming effective."

This Power of Attorney is signed by Paul T. Bruflat, Vice President, who has been authorized pursuant to the above resolution to execute power of attorneys on behalf of American Casualty Company of Reading, Pennsylvania.

This Power of Attorney is signed and sealed by facsimile under and by the authority of the following Resolution adopted by the Board of Directors of the Company by unanimous written consent dated the 25th day of April, 2012:

"Whereas, the bylaws of the Company or specific resolution of the Board of Directors has authorized various officers (the "Authorized Officers")to execute various policies, bonds, undertakings and other obligatory instruments of like nature; and

Whereas, from time to time, the signature of the Authorized Officers, in addition to being provided in original, hard copy format, may be provided via facsimile or otherwise in an electronic format (collectively, "Electronic Signatures"); Now therefore be it resolved: that the Electronic Signature of any Authorized Officer shall be valid and binding on the Company. "

CONTINENTAL CASUALTY COMPANY
Chicago, Illinois
Statement of Net Admitted Assets and Liabilities
December 31, 2020

ASSETS

Bonds	$	31,739,863,036
Stocks		5,477,910,817
Mortgage loans on real estate		1,061,159,487
Cash, cash equivalents, and short-term investments		1,084,081,751
Other invested assets		1,714,830,044
Receivables for securities		63,102,929
Investment income due and accrued		311,368,437
Premiums and considerations		2,180,568,451
Amounts recoverable from reinsurers		154,925,874
Funds held by or deposited with reinsured companies		6,015,575
Current federal and foreign income tax recoverable and interest thereon		15,339
Net deferred tax asset		516,818,788
Other assets		89,632,850
Total Assets	$	44,400,293,379

LIABILITIES AND SURPLUS

Losses	$	15,612,132,102
Loss adjustment expense		2,069,601,590
Other expenses (excluding taxes, license and fees)		687,108,534
Taxes, License and fees (excluding federal and foreign income taxes)		144,792,471
Federal and foreign income taxes payable		68,533,580
Unearned premiums		14,561,969,823
Ceded reinsurance premiums payable (net of ceding commissions)		671,624,983
Provision for reinsurance		81,488,652
Other liabilities		(204,576,740)
Total Liabilities	$	33,692,674,995

Surplus Account:			
Capital paid up	$ 35,632,565		
Gross paid in and contributed surplus	5,684,824,266		
Special Surplus	741,711,504		
Unassigned funds	4,245,450,049		
Surplus as regards policyholders		$	10,707,618,384
Total Liabilities and Capital		$	44,400,293,379

I, Julie Lee, Assistant Vice President of Continental Casualty Company hereby certify that the above is an accurate representation of the financial statement of the Company dated December 31, 2020, as filed with the various Insurance Departments and is a true and correct statement of the condition of Continental Casualty Company as of that date.

CONTINENTAL CASUALTY COMPANY

By Julie Lee
Assistant Vice President, External Reporting

Subscribed and sworn to me this 9 day of April 2021
My commission expires:

YOLANDA JIMENEZ
OFFICIAL SEAL
Notary Public, State of Illinois
My Commission Expires
September 24, 2025

By Yolanda Jimenez
Notary Public

CHUBB

Power of Attorney

Federal Insurance Company | Vigilant Insurance Company | Pacific Indemnity Company
Westchester Fire Insurance Company | ACE American Insurance Company

Know All by These Presents, that **FEDERAL INSURANCE COMPANY**, an Indiana corporation, **VIGILANT INSURANCE COMPANY**, a New York corporation, **PACIFIC INDEMNITY COMPANY**, a Wisconsin corporation, **WESTCHESTER FIRE INSURANCE COMPANY** and **ACE AMERICAN INSURANCE COMPANY** corporations of the Commonwealth of Pennsylvania, do each hereby constitute and appoint Katherine Acosta, Thomas Bean, George O. Brewster, Desiree Cardlin, Colette R. Chisholm, Dana Granice, Susan Lupski, Gerard S. Macholz, Camille Maitland, Robert T. Pearson, Nelly Renchiwich, Rita Losquadro, Vincent A. Walsh and Michelle Wannamaker of Uniondale, New York ----------

each as their true and lawful Attorney-in-Fact to execute under such designation in their names and to affix their corporate seals to and deliver for and on their behalf as surety thereon or otherwise, bonds and undertakings and other writings obligatory in the nature thereof (other than bail bonds) given or executed in the course of business, and any instruments amending or altering the same, and consents to the modification or alteration of any instrument referred to in said bonds or obligations.

In Witness Whereof, said **FEDERAL INSURANCE COMPANY, VIGILANT INSURANCE COMPANY, PACIFIC INDEMNITY COMPANY, WESTCHESTER FIRE INSURANCE COMPANY** and **ACE AMERICAN INSURANCE COMPANY** have each executed and attested these presents and affixed their corporate seals on this **8th** day of **January, 2021.**

Dawn M. Chloros, Assistant Secretary

Stephen M. Haney, Vice President

STATE OF NEW JERSEY
County of Hunterdon ss.

On this **8th** day of **January, 2021** before me, a Notary Public of New Jersey, personally came Dawn M. Chloros and Stephen M. Haney, to me known to be Assistant Secretary and Vice President, respectively, of FEDERAL INSURANCE COMPANY, VIGILANT INSURANCE COMPANY, PACIFIC INDEMNITY COMPANY, WESTCHESTER FIRE INSURANCE COMPANY and ACE AMERICAN INSURANCE COMPANY, the companies which executed the foregoing Power of Attorney, and the said Dawn M. Chloros and Stephen M. Haney, being by me duly sworn, severally and each for herself and himself did depose and say that they are Assistant Secretary and Vice President, respectively, of FEDERAL INSURANCE COMPANY, VIGILANT INSURANCE COMPANY, PACIFIC INDEMNITY COMPANY, WESTCHESTER FIRE INSURANCE COMPANY and ACE AMERICAN INSURANCE COMPANY and know the corporate seals thereof, that the seals affixed to the foregoing Power of Attorney are such corporate seals and were thereto affixed by authority of said Companies; and that their signatures as such officers were duly affixed and subscribed by like authority.

Notarial Seal

KATHERINE J. ADELAAR
NOTARY PUBLIC OF NEW JERSEY
No. 2316685
Commission Expires July 16, 2024

Notary Public

CERTIFICATION

Resolutions adopted by the Boards of Directors of FEDERAL INSURANCE COMPANY, VIGILANT INSURANCE COMPANY, and PACIFIC INDEMNITY COMPANY on August 30, 2016; WESTCHESTER FIRE INSURANCE COMPANY on December 11, 2006; and ACE AMERICAN INSURANCE COMPANY on March 20, 2009:

"RESOLVED, that the following authorizations relate to the execution, for and on behalf of the Company, of bonds, undertakings, recognizances, contracts and other written commitments of the Company entered into in the ordinary course of business (each a "Written Commitment"):

(1) Each of the Chairman, the President and the Vice Presidents of the Company is hereby authorized to execute any Written Commitment for and on behalf of the Company, under the seal of the Company or otherwise.

(2) Each duly appointed attorney-in-fact of the Company is hereby authorized to execute any Written Commitment for and on behalf of the Company, under the seal of the Company or otherwise, to the extent that such action is authorized by the grant of powers provided for in such person's written appointment as such attorney-in-fact.

(3) Each of the Chairman, the President and the Vice Presidents of the Company is hereby authorized, for and on behalf of the Company, to appoint in writing any person the attorney-in-fact of the Company with full power and authority to execute, for and on behalf of the Company, under the seal of the Company or otherwise, such Written Commitments of the Company as may be specified in such written appointment, which specification may be by general type or class of Written Commitments or by specification of one or more particular Written Commitments.

(4) Each of the Chairman, the President and the Vice Presidents of the Company is hereby authorized, for and on behalf of the Company, to delegate in writing to any other officer of the Company the authority to execute, for and on behalf of the Company, under the Company's seal or otherwise, such Written Commitments of the Company as are specified in such written delegation, which specification may be by general type or class of Written Commitments or by specification of one or more particular Written Commitments.

(5) The signature of any officer or other person executing any Written Commitment or appointment or delegation pursuant to this Resolution, and the seal of the Company, may be affixed by facsimile on such Written Commitment or written appointment or delegation.

FURTHER RESOLVED, that the foregoing Resolution shall not be deemed to be an exclusive statement of the powers and authority of officers, employees and other persons to act for and on behalf of the Company, and such Resolution shall not limit or otherwise affect the exercise of any such power or authority otherwise validly granted or vested."

I, Dawn M. Chloros, Assistant Secretary of FEDERAL INSURANCE COMPANY, VIGILANT INSURANCE COMPANY, PACIFIC INDEMNITY COMPANY, WESTCHESTER FIRE INSURANCE COMPANY and ACE AMERICAN INSURANCE COMPANY (the "Companies") do hereby certify that

(i) the foregoing Resolutions adopted by the Board of Directors of the Companies are true, correct and in full force and effect,
(ii) the foregoing Power of Attorney is true, correct and in full force and effect.

Given under my hand and seals of said Companies at Whitehouse Station, NJ, this June 3, 2021

Dawn M. Chloros, Assistant Secretary

IN THE EVENT YOU WISH TO VERIFY THE AUTHENTICITY OF THIS BOND OR NOTIFY US OF ANY OTHER MATTER, PLEASE CONTACT US AT:
Telephone (908) 903- 3493 Fax (908) 903- 3656 e-mail: surety@chubb.com

FEDERAL INSURANCE COMPANY

STATEMENT OF ASSETS, LIABILITIES AND SURPLUS TO POLICYHOLDERS

Statutory Basis

December 31, 2020

(in thousands)

ASSETS		*LIABILITIES AND SURPLUS TO POLICYHOLDERS*	
Cash and Short Term Investments	$ (247,647)	Outstanding Losses and Loss Expenses	$ 7,823,012
United States Government, State and Municipal Bonds	4,277,332	Reinsurance Payable on Losses and Expenses	1,421,176
Other Bonds	5,455,272	Unearned Premiums	2,145,775
Stocks	567,832	Ceded Reinsurance Premiums Payable	261,276
Other Invested Assets	1,207,053	Other Liabilities	551,641
TOTAL INVESTMENTS	11,259,842	TOTAL LIABILITIES	12,202,880
Investments in Affiliates:		Capital Stock	20,980
Great Northern Ins. Co.	404,889	Paid-In Surplus	2,711,474
Vigilant Ins. Co.	349,615	Unassigned Funds	1,591,718
Chubb Indemnity Ins. Co.	182,191		
Chubb National Ins. Co.	186,189	SURPLUS TO POLICYHOLDERS	4,324,172
Other Affiliates	98,826		
Premiums Receivable	1,634,609		
Other Assets	2,410,891		
TOTAL ADMITTED ASSETS	$ 16,527,052	TOTAL LIABILITIES AND SURPLUS	$ 16,527,052

Investments are valued in accordance with requirements of the National Association of Insurance Commissioners, At December 31, 2020, investments with a carrying value of 507,794,700 were deposited with government authorities as required by law.

STATE OF PENNSYLVANIA

COUNTY OF PHILADELPHIA

John Taylor, being duly sworn, says that he is Senior Vice President of Federal Insurance Company and that to the best of his knowledge and belief the foregoing is a true and correct statement of the said Company's financial condition as of the 31 st day of December, 2020.

Sworn before me this April 7 2021

DocuSigned by:

3FB94DA77[illegible] Senior Vice President

Diane Wright

Notary Public

August 8, 2023

My commission expires

Commonwealth of Pennsylvania - Notary Seal
Diane Wright, Notary Public
Philadelphia County
My commission expires August 8, 2023
Commission number 1235745

Member, Pennsylvania Association of Notaries

CERTIFICATE OF LIABILITY INSURANCE

DATE (MM/DD/YYYY): 6/9/2021

THIS CERTIFICATE IS ISSUED AS A MATTER OF INFORMATION ONLY AND CONFERS NO RIGHTS UPON THE CERTIFICATE HOLDER. THIS CERTIFICATE DOES NOT AFFIRMATIVELY OR NEGATIVELY AMEND, EXTEND OR ALTER THE COVERAGE AFFORDED BY THE POLICIES BELOW. THIS CERTIFICATE OF INSURANCE DOES NOT CONSTITUTE A CONTRACT BETWEEN THE ISSUING INSURER(S), AUTHORIZED REPRESENTATIVE OR PRODUCER, AND THE CERTIFICATE HOLDER.

IMPORTANT: If the certificate holder is an ADDITIONAL INSURED, the policy(ies) must have ADDITIONAL INSURED provisions or be endorsed. If SUBROGATION IS WAIVED, subject to the terms and conditions of the policy, certain policies may require an endorsement. A statement on this certificate does not confer rights to the certificate holder in lieu of such endorsement(s).

PRODUCER Alliant Insurance Services, Inc. 333 Earle Ovington Blvd Ste 700 Uniondale NY 11553 License#: 0C36861	**CONTACT NAME:** Dylan Lovell **PHONE (A/C, No, Ext):** 516-414-8900 **FAX (A/C, No):** **E-MAIL ADDRESS:** Dylan.Lovell@alliant.com
INSURED MLJPJV0-01 IPC Resiliency Partners 1010 Northern Blvd., Suite 200 Great Neck NY 11021	**INSURER(S) AFFORDING COVERAGE** / **NAIC #** **INSURER A :** Zurich American Insurance Comp — 16535 **INSURER B :** Markel American — 28932 **INSURER C :** **INSURER D :** **INSURER E :** **INSURER F :**

COVERAGES **CERTIFICATE NUMBER:** 633002900 **REVISION NUMBER:**

THIS IS TO CERTIFY THAT THE POLICIES OF INSURANCE LISTED BELOW HAVE BEEN ISSUED TO THE INSURED NAMED ABOVE FOR THE POLICY PERIOD INDICATED. NOTWITHSTANDING ANY REQUIREMENT, TERM OR CONDITION OF ANY CONTRACT OR OTHER DOCUMENT WITH RESPECT TO WHICH THIS CERTIFICATE MAY BE ISSUED OR MAY PERTAIN, THE INSURANCE AFFORDED BY THE POLICIES DESCRIBED HEREIN IS SUBJECT TO ALL THE TERMS, EXCLUSIONS AND CONDITIONS OF SUCH POLICIES. LIMITS SHOWN MAY HAVE BEEN REDUCED BY PAID CLAIMS.

INSR LTR	TYPE OF INSURANCE	ADDL INSD	SUBR WVD	POLICY NUMBER	POLICY EFF (MM/DD/YYYY)	POLICY EXP (MM/DD/YYYY)	LIMITS	
A	X **COMMERCIAL GENERAL LIABILITY** ☐ CLAIMS-MADE ☒ OCCUR GEN'L AGGREGATE LIMIT APPLIES PER: ☐ POLICY ☒ PRO-JECT ☐ LOC ☐ OTHER:	Y	Y	GLO 4329659-00	6/3/2021	6/3/2027	EACH OCCURRENCE DAMAGE TO RENTED PREMISES (Ea occurrence) MED EXP (Any one person) PERSONAL & ADV INJURY GENERAL AGGREGATE PRODUCTS - COMP/OP AGG $	$ 10,000,000 $ 300,000 $ 25,000 $ 5,000,000 $ 10,000,000 $ 10,000,000 $
	AUTOMOBILE LIABILITY ☐ ANY AUTO ☐ OWNED AUTOS ONLY ☐ SCHEDULED AUTOS ☐ HIRED AUTOS ONLY ☐ NON-OWNED AUTOS ONLY						COMBINED SINGLE LIMIT (Ea accident) BODILY INJURY (Per person) BODILY INJURY (Per accident) PROPERTY DAMAGE (Per accident) $	$ $ $ $ $
B	☐ **UMBRELLA LIAB** ☒ OCCUR X **EXCESS LIAB** ☐ CLAIMS-MADE ☐ DED ☐ RETENTION $	Y	Y	Various - See Addendum	6/3/2021	6/3/2027	EACH OCCURRENCE AGGREGATE $	$ 200,000,000 $ 200,000,000 $
	WORKERS COMPENSATION AND EMPLOYERS' LIABILITY Y / N ANYPROPRIETOR/PARTNER/EXECUTIVE OFFICER/MEMBER EXCLUDED? ☐ **(Mandatory in NH)** If yes, describe under DESCRIPTION OF OPERATIONS below	N / A					☐ PER STATUTE ☐ OTH-ER E.L. EACH ACCIDENT E.L. DISEASE - EA EMPLOYEE E.L. DISEASE - POLICY LIMIT	 $ $ $

DESCRIPTION OF OPERATIONS / LOCATIONS / VEHICLES (ACORD 101, Additional Remarks Schedule, may be attached if more space is required)

Re: Installation of East Side Coastal Resiliency From Montgomery Street to East 15th Street - Borough of Manhattan, FMS ID: SANDRESM1, E-PIN: 85021B0024001, DDC PIN: 8502021RC0001C

City of New York, including its officials and employees, with coverage at least as broad as ISO Form CG2010 and CG2037; all person(s) or organization(s), if any, that Article 22.1.1(b) of the Contract requires to be named as an additional insured, with coverage at least as broad as CG2026; U.S. Department of Housing and Urban Development (HUD), including its officials and employees; New York City Housing Authority (NYCHA), including its officials and employees; New York City Economic Development Corporation (EDC), including its officials and employees; Consolidated Edison, Inc.; Empire City Subway (ECS) / Verizon; Gouverneur Gardens (GG) Housing Corporation; New York City Transit Authority (NYCTA), the Manhattan and Bronx Surface Transit Operating Authority (MaBSTOA), the Staten Island Rapid Transit Operating Authority (SIRTOA), MTA Capital Construction (MTACC), the Metropolitan Transportation See Attached...

CERTIFICATE HOLDER

City of New York Department of Design and Construction
30 30 Thomas Avenue
Long Island City NY 11101

CANCELLATION 30 Day Notice of Cancellation

SHOULD ANY OF THE ABOVE DESCRIBED POLICIES BE CANCELLED BEFORE THE EXPIRATION DATE THEREOF, NOTICE WILL BE DELIVERED IN ACCORDANCE WITH THE POLICY PROVISIONS.

AUTHORIZED REPRESENTATIVE

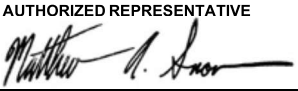

© 1988-2015 ACORD CORPORATION. All rights reserved.

AGENCY CUSTOMER ID: MLJPJV0-01

LOC #: _____

ADDITIONAL REMARKS SCHEDULE

AGENCY		NAMED INSURED
Alliant Insurance Services, Inc.		IPC Resiliency Partners 1010 Northern Blvd., Suite 200 Great Neck NY 11021
POLICY NUMBER		
CARRIER	NAIC CODE	EFFECTIVE DATE:

ADDITIONAL REMARKS

THIS ADDITIONAL REMARKS FORM IS A SCHEDULE TO ACORD FORM,

FORM NUMBER: 25 FORM TITLE: CERTIFICATE OF LIABILITY INSURANCE

Authority (MTA) including its subsidiaries and affiliates; East River Housing Corporation (ERH); New York State Department or Transportation (NYSDOT); Altice NV; and Lower East Side Ecology Center are included as Additional Insured as respects Liability arising out of work performed by the Named Insured. The insurance provided shall be primary and any other insurance maintained by the Additional Insured is excess and non-contributory. Waiver of Subrogation applies as required by contract.

© 2008 ACORD CORPORATION. All rights reserved.

The ACORD name and logo are registered marks of ACORD

AGENCY CUSTOMER ID: MLJPJV-01

LOC #:

ADDITIONAL REMARKS SCHEDULE

AGENCY	NAMED INSURED
Uniondale-Alliant Ins Svc Inc	IPC Resiliency Partners
POLICY NUMBER	
CARRIER / NAIC CODE	EFFECTIVE DATE: 6/3/21 - 6/3/27

ADDITIONAL REMARKS

THIS ADDITIONAL REMARKS FORM IS A SCHEDULE TO ACORD FORM,

FORM NUMBER: 25 FORM TITLE: CERTIFICATE OF LIABILITY INSURANCE

Excess Layers:

Markel American Insurance Company - 28932
Policy #MKLM1EUL101589
Occurrence/Aggregate: $5,000,000
Effective: 6/3/2021 - 6/3/2027

Starr Indemnity & Liability Company - 38318
Policy #1000587144211
Occurrence/Aggregate: $5,000,000
Effective: 6/3/21 - 6/3/27

Ascot Specialty Insurance Company - 45055
Policy #EXNA2110000035-01
Occurrence/Aggregate: $5,000,000
Effective: 6/3/21 - 6/3/27

Sompo America Fire & Marine Ins Co - 38997
Policy #EXC30007704800
Occurrence/Aggregate: $12,500,000
Effective: 6/3/21 - 6/3/27

Crum & Forster Indemnity Co - 31348
Policy #5228099091
Occurrence/Aggregate: $12,500,000
Effective: 6/3/21 - 6/3/27

RSUI Indemnity Co - 22314
Policy #NHA094362
Occurrence/Aggregate: $5,500,000
Effective: 6/3/21 - 6/3/27

Starr Indemnity & Liability Company- 38318
Policy #1000587145211
Occurrence/Aggregate: $7,000,000
Effective: 6/33/21 - 6/3/27

Great American Casualty Ins Co - 39896
Policy #EXC3850256
Occurrence/Aggregate: $12,500,000
Effective: 6/3/21 - 6/3/27

Colony Insurance Company - 39993
Policy #AR6461517
Occurrence/Aggregate: $12,500,000
Effective: 6/3/21 - 6/3/27

Zurich American Ins Co - 16535
Policy #AEC 7845768-00
Occurrence/Aggregate: $12,500,000
Effective: 6/3/21 - 6/3/27

Westchester Fire Ins Co - 10030
Policy #G72527525001
Occurrence/Aggregate: $25,000,000
Effective: 6/3/21 - 6/3/27

Superior Specialty Insurance Company - 16551
Policy #ECWEX202100003300
Occurrence/Aggregate: $5,000,000
Effective: 6/3/21 - 6/3/27

Navigators Insurance Company -42307
Policy #IS21EXCZ07UZBIV
Occurrence/Aggregate: $10,000,000
Effective: 6/3/21 - 6/3/27

© 2008 ACORD CORPORATION. All rights reserved.
The ACORD name and logo are registered marks of ACORD

ADDITIONAL REMARKS SCHEDULE

AGENCY	NAMED INSURED
Uniondale-Alliant Ins Svc Inc	IPC Resiliency Partners
POLICY NUMBER	
CARRIER / NAIC CODE	EFFECTIVE DATE: 6/3/21 - 6/3/27

ADDITIONAL REMARKS

THIS ADDITIONAL REMARKS FORM IS A SCHEDULE TO ACORD FORM,

FORM NUMBER: 25 **FORM TITLE:** CERTIFICATE OF LIABILITY INSURANCE

Excess Layers:

Berkshire Hathaway Specialty Insurance Company - 22276
Policy #MKLM1EUL101589
Occurrence/Aggregate: $15,000,000
Effective: 6/3/2021 - 6/3/2027

Arcadia/Hamilton - AA1120113
Policy #B0507UC2102589
Occurrence/Aggregate: $10,000,000
Effective: 6/3/21 - 6/3/27

Canopius/Argo/Apollo/Ascot - AA1126004
Policy #B0507UC2102587
Occurrence/Aggregate: $15,000,000
Effective: 6/3/21 - 6/3/27

Lexington Insurance Company - 19437
Policy #UC2102630
Occurrence/Aggregate: $15,000,000
Effective: 6/3/21 - 6/3/27

Chubb Underwriting Agencies Limited - AA1128488
Policy #UC2102631
Occurrence/Aggregate: $15,000,000
Effective: 6/3/21 - 6/3/27

© 2008 ACORD CORPORATION. All rights reserved.
The ACORD name and logo are registered marks of ACORD

June 10, 2021

IPC Resiliency Partners
1010 Northern Blvd., Suite 200
Great Neck, NY 11021

Re: SANDRESM1
Excess Liability Tower – Lloyd's of London Policies

To Whom It May Concern:

This letter is to confirm that Lloyd's of London (AA1122000) is A, XV Rated on A.M. Best. There are not individual ratings for each of the Lloyd's of London Syndicates, as they all share the same A, XV Rating. The Syndicates are searchable on A.M. Best, but all are assigned a rating of NR (Not Rated).

- Lloyd's Syndicate 3334 (Hamilton Managing Agency Limited) AA1120113
- Lloyd's Syndicate 4444 (Canopius Managing Agents Limited) AA1126004
- Lloyd's Syndicate 2488 (Chubb Underwriting Agencies Limited) AA1128488

The Lloyd's of London Syndicates do not have NAIC Codes. They use Alien Insurer Identification Numbers (AIIN) in place of NAIC. The Syndicates are Excess & Surplus (E&S) carriers at the top of the $200mm Excess Tower. The General Liability and all Excess Liability policies have Limits that reinstate twice throughout the Project term.

Should you have any questions, please feel free to contact me.

Sincerely,

Paul Maloney

Paul Maloney
Assistant Account Manager

Project ID.: SANDRESM1

CITY OF NEW YORK

CERTIFICATION BY INSURANCE BROKER OR AGENT

The undersigned insurance broker represents to the City of New York that the attached Certificate of Insurance is accurate in all material respects.

Alliant Insurance Services Inc.
[Name of broker or agent (typewritten)]

333 Earle Ovington Blvd. #700 Uniondale NY 11553
[Address of broker or agent (typewritten)]

Sharon.oderwald@alliant.com
[Email address of broker or agent (typewritten)]

516-414-8900
[Phone number/Fax number of broker or agent (typewritten)]

Sharon Oderwald
[Signature of authorized official, broker, or agent]

Sharon Oderwald, Account Manager
[Name and title of authorized official, broker, or agent (typewritten)]

State of ..... N Y .....)
) ss.:
County of ..... Nassau .....)

Sworn to before me this 9th day of June, 20 21

Maria Knipfing
NOTARY PUBLIC FOR THE STATE OF N Y

MARIA KNIPFING
Notary Public, State of New York
No. 01KN6116407
Qualified in Nassau County
Commission Expires September 27, 20 24

CERTIFICATE OF LIABILITY INSURANCE

DATE (MM/DD/YYYY): 6/8/2021

THIS CERTIFICATE IS ISSUED AS A MATTER OF INFORMATION ONLY AND CONFERS NO RIGHTS UPON THE CERTIFICATE HOLDER. THIS CERTIFICATE DOES NOT AFFIRMATIVELY OR NEGATIVELY AMEND, EXTEND OR ALTER THE COVERAGE AFFORDED BY THE POLICIES BELOW. THIS CERTIFICATE OF INSURANCE DOES NOT CONSTITUTE A CONTRACT BETWEEN THE ISSUING INSURER(S), AUTHORIZED REPRESENTATIVE OR PRODUCER, AND THE CERTIFICATE HOLDER.

IMPORTANT: If the certificate holder is an ADDITIONAL INSURED, the policy(ies) must have ADDITIONAL INSURED provisions or be endorsed. If SUBROGATION IS WAIVED, subject to the terms and conditions of the policy, certain policies may require an endorsement. A statement on this certificate does not confer rights to the certificate holder in lieu of such endorsement(s).

PRODUCER Alliant Insurance Services, Inc. 333 Earle Ovington Blvd Ste 700 Uniondale NY 11553 License#: 0C36861	**CONTACT NAME:** Dylan Lovell **PHONE (A/C, No, Ext):** 516-414-8900 **FAX (A/C, No):** **E-MAIL ADDRESS:** Dylan.Lovell@alliant.com
INSURED MLJPJV0-01 IPC Resiliency Partners 1010 Northern Blvd., Suite 200 Great Neck NY 11021	**INSURER(S) AFFORDING COVERAGE** / **NAIC #** **INSURER A :** Zurich American Insurance Comp / 16535 **INSURER B :** Fair American Insurance and Re / 35157 **INSURER C :** **INSURER D :** **INSURER E :** **INSURER F :**

COVERAGES **CERTIFICATE NUMBER:** 1936660628 **REVISION NUMBER:**

THIS IS TO CERTIFY THAT THE POLICIES OF INSURANCE LISTED BELOW HAVE BEEN ISSUED TO THE INSURED NAMED ABOVE FOR THE POLICY PERIOD INDICATED. NOTWITHSTANDING ANY REQUIREMENT, TERM OR CONDITION OF ANY CONTRACT OR OTHER DOCUMENT WITH RESPECT TO WHICH THIS CERTIFICATE MAY BE ISSUED OR MAY PERTAIN, THE INSURANCE AFFORDED BY THE POLICIES DESCRIBED HEREIN IS SUBJECT TO ALL THE TERMS, EXCLUSIONS AND CONDITIONS OF SUCH POLICIES. LIMITS SHOWN MAY HAVE BEEN REDUCED BY PAID CLAIMS.

INSR LTR	TYPE OF INSURANCE	ADDL INSD	SUBR WVD	POLICY NUMBER	POLICY EFF (MM/DD/YYYY)	POLICY EXP (MM/DD/YYYY)	LIMITS	
	COMMERCIAL GENERAL LIABILITY CLAIMS-MADE / OCCUR GEN'L AGGREGATE LIMIT APPLIES PER: POLICY / PRO-JECT / LOC OTHER:						EACH OCCURRENCE DAMAGE TO RENTED PREMISES (Ea occurrence) MED EXP (Any one person) PERSONAL & ADV INJURY GENERAL AGGREGATE PRODUCTS - COMP/OP AGG	$ $ $ $ $ $
A	**AUTOMOBILE LIABILITY** ANY AUTO OWNED AUTOS ONLY / SCHEDULED AUTOS X HIRED AUTOS ONLY / X NON-OWNED AUTOS ONLY	Y	Y	BAP 7981301	6/3/2021	6/3/2027	COMBINED SINGLE LIMIT (Ea accident) BODILY INJURY (Per person) BODILY INJURY (Per accident) PROPERTY DAMAGE (Per accident)	$ 2,000,000 $ $ $
	UMBRELLA LIAB / OCCUR **EXCESS LIAB** / CLAIMS-MADE DED / RETENTION $						EACH OCCURRENCE AGGREGATE	$ $
	WORKERS COMPENSATION AND EMPLOYERS' LIABILITY ANYPROPRIETOR/PARTNER/EXECUTIVE OFFICER/MEMBER EXCLUDED? **Y / N** **(Mandatory in NH)** If yes, describe under DESCRIPTION OF OPERATIONS below	N / A					PER STATUTE / OTH-ER E.L. EACH ACCIDENT E.L. DISEASE - EA EMPLOYEE E.L. DISEASE - POLICY LIMIT	 $ $ $
B	Railroad Protective Liability			RPL-7000430-00	6/3/2021	8/31/2026	Each Occ/Agg	$2mm/$6mm

DESCRIPTION OF OPERATIONS / LOCATIONS / VEHICLES (ACORD 101, Additional Remarks Schedule, may be attached if more space is required)

Re: Installation of East Side Coastal Resiliency From Montgomery Street to East 15th Street - Borough of Manhattan, FMS ID: SANDRESM1, E-PIN: 85021B0024001, DDC PIN: 8502021RC0001C

City of New York, including its officials and employees, with coverage at least as broad as ISO Form CG2010 and CG2037; all person(s) or organization(s), if any, that Article 22.1.1(b) of the Contract requires to be named as an additional insured, with coverage at least as broad as CG2026; U.S. Department of Housing and Urban Development (HUD), including its officials and employees; New York City Housing Authority (NYCHA), including its officials and employees; New York City Economic Development Corporation (EDC), including its officials and employees; Consolidated Edison, Inc.; Empire City Subway (ECS) / Verizon; Gouverneur Gardens (GG) Housing Corporation; New York City Transit Authority (NYCTA), the Manhattan and Bronx Surface Transit Operating Authority (MaBSTOA), the Staten Island Rapid Transit Operating Authority (SIRTOA), MTA Capital Construction (MTACC), the Metropolitan Transportation

See Attached...

CERTIFICATE HOLDER	**CANCELLATION** 30 Day Notice of Cancellation
City of New York Department of Design and Construction 30 30 Thomas Avenue Long Island City NY 11101	**SHOULD ANY OF THE ABOVE DESCRIBED POLICIES BE CANCELLED BEFORE THE EXPIRATION DATE THEREOF, NOTICE WILL BE DELIVERED IN ACCORDANCE WITH THE POLICY PROVISIONS.** **AUTHORIZED REPRESENTATIVE**

© 1988-2015 ACORD CORPORATION. All rights reserved.

AGENCY CUSTOMER ID: MLJPJV0-01

LOC #:

ADDITIONAL REMARKS SCHEDULE

AGENCY	NAMED INSURED
Alliant Insurance Services, Inc.	IPC Resiliency Partners 1010 Northern Blvd., Suite 200 Great Neck NY 11021
POLICY NUMBER	
CARRIER / NAIC CODE	EFFECTIVE DATE:

ADDITIONAL REMARKS

THIS ADDITIONAL REMARKS FORM IS A SCHEDULE TO ACORD FORM,

FORM NUMBER: 25 **FORM TITLE:** CERTIFICATE OF LIABILITY INSURANCE

Authority (MTA) including its subsidiaries and affiliates; East River Housing Corporation (ERH); New York State Department or Transportation (NYSDOT); Altice NV; and Lower East Side Ecology Center are included as Additional Insured as respects Liability arising out of work performed by the Named Insured. The insurance provided shall be primary and any other insurance maintained by the Additional Insured is excess and non-contributory. Waiver of Subrogation applies as required by contract.

© 2008 ACORD CORPORATION. All rights reserved.

The ACORD name and logo are registered marks of ACORD

Project ID.: SANDRESM1

CITY OF NEW YORK

CERTIFICATION BY INSURANCE BROKER OR AGENT

The undersigned insurance broker represents to the City of New York that the attached Certificate of Insurance is accurate in all material respects.

Alliant Insurance Services Inc.
[Name of broker or agent (typewritten)]

333 Earle Ovington Blvd. #700 Uniondale NY 11553
[Address of broker or agent (typewritten)]

Sharon.oderwald@alliant.com
[Email address of broker or agent (typewritten)]

516-414-8900
[Phone number/Fax number of broker or agent (typewritten)]

Sharon Oderwald
[Signature of authorized official, broker, or agent]

Sharon Oderwald, Account Manager
[Name and title of authorized official, broker, or agent (typewritten)]

State of ..... NY .....)
) ss.:
County of ..... Nassau .....)

Sworn to before me this 8th day of June, 20 21

Maria Knipfing
NOTARY PUBLIC FOR THE STATE OF N.Y.

MARIA KNIPFING
Notary Public, State of New York
No. 01KN6116407
Qualified in Nassau County
Commission Expires September 27, 2024

NEW YORK STATE Workers' Compensation Board

CERTIFICATE OF INSURANCE COVERAGE
DISABILITY AND PAID FAMILY LEAVE BENEFITS LAW

PART 1. To be completed by Disability and Paid Family Leave Benefits Carrier or Licensed Insurance Agent of that Carrier

1a. Legal Name & Address of Insured (use street address only)
IPC RESILIENCY PARTNERS
1010 NORTHERN BLVD
GREAT NECK, NY 11021

Work Location of Insured *(Only required if coverage is specifically limited to certain locations in New York State, i.e., Wrap-Up Policy)*

1b. Business Telephone Number of Insured
7185719561

1c. Federal Employer Identification Number of Insured or Social Security Number
86-1934841

2. Name and Address of Entity Requesting Proof of Coverage (Entity Being Listed as the Certificate Holder)
City of New York Department of Design and Construction
30 30 Thomas Avenue
Long Island City, NY 11101

3a. Name of Insurance Carrier
Standard Security Life Insurance Company of New York

3b. Policy Number of Entity Listed in Box "1a"
Z12899-000

3c. Policy effective period
5/28/2021 to 6/3/2022

4. Policy provides the following benefits:
- [x] A. Both disability and paid family leave benefits.
- [ ] B. Disability benefits only.
- [ ] C. Paid family leave benefits only.

5. Policy covers:
- [x] A. All of the employer's employees eligible under the NYS Disability and Paid Family Leave Benefits Law.
- [ ] B. Only the following class or classes of employer's employees:

Under penalty of perjury, I certify that I am an authorized representative or licensed agent of the insurance carrier referenced above and that the named insured has NYS Disability and/or Paid Family Leave Benefits insurance coverage as described above.

Date Signed 6/4/2021 By _____
(Signature of insurance carrier's authorized representative or NYS Licensed Insurance Agent of that insurance carrier)

Telephone Number (212) 355-4141 Name and Title SUPERVISOR-DBL/POLICY SERVICES

IMPORTANT: If Boxes 4A and 5A are checked, and this form is signed by the insurance carrier's authorized representative or NYS Licensed Insurance Agent of that carrier, this certificate is COMPLETE. Mail it directly to the certificate holder.

If Box 4B, 4C or 5B is checked, this certificate is NOT COMPLETE for purposes of Section 220, Subd. 8 of the NYS Disability and Paid Family Leave Benefits Law. It must be mailed for completion to the Workers' Compensation Board, Plans Acceptance Unit, PO Box 5200, Binghamton, NY 13902-5200.

PART 2. To be completed by the NYS Workers' Compensation Board (Only if Box 4C or 5B of Part 1 has been checked)

State of New York
Workers' Compensation Board

According to information maintained by the NYS Workers' Compensation Board, the above-named employer has complied with the NYS Disability and Paid Family Leave Benefits Law with respect to all of his/her employees.

Date Signed _____ By _____
(Signature of Authorized NYS Workers' Compensation Board Employee)

Telephone Number _____ Name and Title _____

Please Note: *Only insurance carriers licensed to write NYS disability and paid family leave benefits insurance policies and NYS licensed insurance agents of those insurance carriers are authorized to issue Form DB-120.1.* ***Insurance brokers are NOT authorized to issue this form.***

DB-120.1 (10-17)

Additional Instructions for Form DB-120.1

By signing this form, the insurance carrier identified in Box 3 on this form is certifying that it is insuring the business referenced in box "1a" for disability and/or paid family leave benefits under the New York State Disability and Paid Family Leave Benefits Law. The Insurance Carrier or its licensed agent will send this Certificate of Insurance to the entity listed as the certificate holder in Box 2.

The insurance carrier must notify the above certificate holder and the Workers' Compensation Board within 10 days IF a policy is cancelled due to nonpayment of premiums or within 30 days IF there are reasons other than nonpayment of premiums that cancel the policy or eliminate the insured from coverage indicated on this Certificate. (These notices my be sent by regular mail.) Otherwise, this Certificate is valid for one year after this form is approved by the insurance carrier or its licensed agent, or until the policy expiration date listed in Box 3c, whichever is earlier

This certificate is issued as a matter of information only and confers no rights upon the certificate holder. This certificate does not amend, extend or alter the coverage afforded by the policy listed, nor does it confer any rights or responsibilities beyond those contained in the referenced policy.

This certificate may be used as evidence of a Disability and/or Paid Family Leave Benefits contract of insurance only while the underlying policy is in effect.

Please Note: Upon the cancellation of the disability and/or paid family leave benefits policy indicated on this form, if the business continues to be named on a permit, license or contract issued by a certificate holder, the business must provide that certificate holder with a new Certificate of NYS Disability and/or Paid Family Leave Benefits Coverage or other authorized proof that the business is complying with the mandatory coverage requirements of the New York State Disability and Paid Family Leave Benefits Law.

DISABILITY AND PAID FAMILY LEAVE BENEFITS LAW

§220. Subd. 8

(a) The head of a state or municipal department, board, commission or office authorized or required by law to issue any permit for or in connection with any work involving the employment of employees in employment as defined in this article, and not withstanding any general or special statute requiring or authorizing the issue of such permits, shall not issue such permit unless proof duly subscribed by an insurance carrier is produced in a form satisfactory to the chair, that the payment of disability benefits and after January first, two thousand and twenty-one, the payment of family leave benefits for all employees has been secured as provided by this article. Nothing herein, however, shall be construed as creating any liability on the part of such state or municipal department, board, commission or office to pay any disability benefits to any such employee if so employed.

(b) The head of a state or municipal department, board, commission or office authorized or required by law to enter into any contract for or in connection with any work involving the employment of employees in employment as defined in this article and notwithstanding any general or special statute requiring or authorizing any such contract, shall not enter into any such contract unless proof duly subscribed by an insurance carrier is produced in a form satisfactory to the chair, that the payment of disability benefits and after January first, two thousand eighteen, the payment of family leave benefits for all employees has been secured as provided by this article.

NEW YORK STATE | Workers' Compensation Board

CERTIFICATE OF NYS WORKERS' COMPENSATION INSURANCE COVERAGE

1a. Legal Name & Address of Insured (use street address only)	1b. Business Telephone Number of Insured
IPC Resiliency Partners 1010 Northern Blvd., Suite 200 Great Neck, NY 11021	718-554-2800 1c. NYS Unemployment Insurance Employer Registration Number of Insured
Work Location of Insured *(Only required if coverage is specifically limited to certain locations in New York State, i.e., a Wrap-Up Policy)*	1d. Federal Employer Identification Number of Insured or Social Security Number 86-1934841
2. Name and Address of Entity Requesting Proof of Coverage (Entity Being Listed as the Certificate Holder) City of New York Department of Design and Construction 30 30 Thomas Avenue Long Island City, NY 11101	3a. Name of Insurance Carrier Zurich American Insurance Company 3b. Policy Number of Entity Listed in Box "1a" WC 4329659-00 3c. Policy effective period 06/03/2021 to 06/03/2022 3d. The Proprietor, Partners or Executive Officers are ☒ included. (Only check box if all partners/officers included) ☐ all excluded or certain partners/officers excluded.

This certifies that the insurance carrier indicated above in box "3" insures the business referenced above in box "1a" for workers' compensation under the New York State Workers' Compensation Law. **(To use this form, New York (NY) must be listed under Item 3A on the INFORMATION PAGE of the workers' compensation insurance policy).** The Insurance Carrier or its licensed agent will send this Certificate of Insurance to the entity listed above as the certificate holder in box "2".

The insurance carrier must notify the above certificate holder and the Workers' Compensation Board within 10 days IF a policy is canceled due to nonpayment of premiums or within 30 days IF there are reasons other than nonpayment of premiums that cancel the policy or eliminate the insured from the coverage indicated on this Certificate. (These notices may be sent by regular mail.) **Otherwise, this Certificate is valid for one year after this form is approved by the insurance carrier or its licensed agent, or until the policy expiration date listed in box "3c", whichever is earlier.**

This certificate is issued as a matter of information only and confers no rights upon the certificate holder. This certificate does not amend, extend or alter the coverage afforded by the policy listed, nor does it confer any rights or responsibilities beyond those contained in the referenced policy.

This certificate may be used as evidence of a Workers' Compensation contract of insurance only while the underlying policy is in effect.

Please Note: Upon cancellation of the workers' compensation policy indicated on this form, if the business continues to be named on a permit, license or contract issued by a certificate holder, the business must provide that certificate holder with a new Certificate of Workers' Compensation Coverage or other authorized proof that the business is complying with the mandatory coverage requirements of the New York State Workers' Compensation Law.

Under penalty of perjury, I certify that I am an authorized representative or licensed agent of the insurance carrier referenced above and that the named insured has the coverage as depicted on this form.

Approved by: Paul Maloney
(Print name of authorized representative or licensed agent of insurance carrier)

Approved by: Paul Maloney 06/04/2021
(Signature) (Date)

Title: Assistant Account Manager

Telephone Number of authorized representative or licensed agent of insurance carrier: 516-414-8613

Please Note: Only insurance carriers and their licensed agents are authorized to issue Form C-105.2. Insurance brokers are NOT authorized to issue it.

Workers' Compensation Law

Section 57. Restriction on issue of permits and the entering into contracts unless compensation is secured.

1. The head of a state or municipal department, board, commission or office authorized or required by law to issue any permit for or in connection with any work involving the employment of employees in a hazardous employment defined by this chapter, and notwithstanding any general or special statute requiring or authorizing the issue of such permits, shall not issue such permit unless proof duly subscribed by an insurance carrier is produced in a form satisfactory to the chair, that compensation for all employees has been secured as provided by this chapter. Nothing herein, however, shall be construed as creating any liability on the part of such state or municipal department, board, commission or office to pay any compensation to any such employee if so employed.

2. The head of a state or municipal department, board, commission or office authorized or required by law to enter into any contract for or in connection with any work involving the employment of employees in a hazardous employment defined by this chapter, notwithstanding any general or special statute requiring or authorizing any such contract, shall not enter into any such contract unless proof duly subscribed by an insurance carrier is produced in a form satisfactory to the chair, that compensation for all employees has been secured as provided by this chapter.

(NO TEXT ON THIS PAGE)

LABOR LAW ARTICLE 8 - NYC PUBLIC WORKS

Workers, Laborers and Mechanics employed on a public work project must receive not less than the prevailing rate of wage and benefits for the classification of work performed by each upon such public work. Pursuant to Labor Law Article 8 the Comptroller of the City of New York has promulgated this schedule solely for Workers, Laborers and Mechanics engaged by private contractors on New York City public work projects. Prevailing rates are required to be annexed to and form part of the public work contract pursuant to § 220 (3).

This schedule is a compilation of separate determinations of the prevailing rate of wage and supplements made by the Comptroller for each trade classification listed herein pursuant to New York State Labor Law section § 220 (5). The source of the wage and supplement rates, whether a collective bargaining agreement, survey data or other, is listed at the end of each classification.

Agency Chief Contracting Officers should contact the Bureau of Labor Law's Classification Unit with any questions concerning trade classifications, prevailing rates or prevailing practices with respect to procurement on New York City public work contracts. Contractors are advised to review the Comptroller's Prevailing Wage Schedule before bidding on public work contracts. Contractors with questions concerning trade classifications, prevailing rates or prevailing practices with respect to public work contracts in the procurement stage must contact the contracting agency responsible for the procurement.

Any error as to compensation under the prevailing wage law or other information as to trade classification, made by the contracting agency in the contract documents or in any other communication, will not preclude a finding against the contractor of prevailing wage violation.

Any questions concerning trade classifications, prevailing rates or prevailing practices on New York City public work contracts that have already been awarded may be directed to the Bureau of Labor Law's Classification Unit by calling (212) 669-4443. All callers must have the agency name and contract registration number available when calling with questions on public work contracts. Please direct all other compliance issues to: Bureau of Labor Law, Attn: Wasyl Kinach, P.E., Office of the Comptroller, 1 Centre Street, Room 651, New York, N.Y. 10007; Fax (212) 669-4002.

The appropriate schedule of prevailing wages and benefits must be posted at all public work sites pursuant to Labor Law § 220 (3-a) (a).

This schedule is applicable to work performed during the effective period, unless otherwise noted. Changes to this schedule are published on our web site comptroller.nyc.gov/wages. Contractors must pay the wages and supplements in effect when the worker, laborer, mechanic performs the work. Preliminary schedules for future one-year periods appear in the City Record on or about June 1 each succeeding year. Final schedules appear on or about July 1 in the City Record and on our web site comptroller.nyc.gov/wages.

The Comptroller's Office has attempted to include all overtime, shift and night differential, Holiday, Saturday, Sunday or other premium time work. However, this schedule does not set forth every prevailing practice with respect to such rates with which employers must comply. All such practices are nevertheless part of the employer's prevailing wage obligation and contained in the collective bargaining agreements of the prevailing wage unions. These collective bargaining agreements are available for inspection by appointment. Requests for appointments may be made by calling (212) 669-4443, Monday through Friday between the hours of 9 a.m. and 5 p.m.

Prevailing rates and ratios for apprentices are published in the Construction Apprentice Prevailing Wage Schedule. Pursuant to Labor Law § 220 (3-e), only apprentices who are individually registered in a bona fide program to which the employer contractor is a participant, registered with the New York State Department of Labor, may be paid at the apprentice rates. Apprentices who are not so registered must be paid as journey persons.

New York City public work projects awarded pursuant to a Project Labor Agreement ("PLA") in accordance with Labor Law section 222 may have different labor standards for shift, premium and overtime work. Please refer to the PLA's pre-negotiated labor agreements for wage and benefit rates applicable to work performed outside of the regular workday. More information is available at the Mayor's Office of Contract Services (MOCS) web page at:

https://www1.nyc.gov/site/mocs/legal-forms/project-labor-agreements.page

All the provisions of Labor Law Article 8 remain applicable to PLA work including, but not limited to, the enforcement of prevailing wage requirements by the Comptroller in accordance with the trade classifications in this schedule; however, we will enforce shift, premium, overtime and other non-standard rates as they appear in a project's pre-negotiated labor agreement.

In order to meet their obligation to provide prevailing supplemental benefits to each covered employee, employers must either:

1) **Provide bona fide fringe benefits which cost the employer no less than the prevailing supplemental benefits rate; or**
2) **Supplement the employee's hourly wage by an amount no less than the prevailing supplemental benefits rate; or**
3) **Provide a combination of bona fide fringe benefits and wage supplements which cost the employer no less than the prevailing supplemental benefits rate in total.**

Although prevailing wage laws do not require employers to provide bona fide fringe benefits (as opposed to wage supplements) to their employees, other laws may. For example, the Employee Retirement Income Security Act, 29 U.S.C. § 1001 et seq., the Patient Protection and Affordable Care Act, 42 U.S.C. § 18001 et seq., and the New York City Paid Sick Leave Law, N.Y.C. Admin. Code § 20-911 et seq., require certain employers to provide certain benefits to their employees. Labor agreements to which employers are a party may also require certain benefits. The Comptroller's Office does not enforce these laws or agreements.

Employers must provide prevailing supplemental benefits at the straight time rate for each hour worked unless otherwise noted in the classification.

Paid Holidays, Vacation and Sick Leave when listed must be paid or provided in addition to the prevailing hourly supplemental benefit rate.

For more information, please refer to the Comptroller's Prevailing Wage Law Regulations in Title 44 of the Rules of the City of New York, Chapter 2, available at comptroller.nyc.gov/wages.

Wasyl Kinach, P.E.
Director of Classifications
Bureau of Labor Law

TABLE OF CONTENTS

CLASSIFICATION	PAGE
ASBESTOS HANDLER	6
BLASTER	6
BOILERMAKER	7
BRICKLAYER	8
CARPENTER - BUILDING COMMERCIAL	9
CARPENTER - HEAVY CONSTRUCTION WORK	10
CARPENTER - HIGH RISE CONCRETE FORMS	11
CARPENTER - SIDEWALK SHED, SCAFFOLD AND HOIST	12
CARPENTER - WOOD WATER STORAGE TANK	12
CEMENT & CONCRETE WORKER	13
CEMENT MASON	14
CORE DRILLER	15
DERRICKPERSON AND RIGGER	17
DIVER	17
DOCKBUILDER - PILE DRIVER	18
DRIVER: TRUCK (TEAMSTER)	19
ELECTRICIAN	21
ELECTRICIAN - ALARM TECHNICIAN	24
ELECTRICIAN-STREET LIGHTING WORKER	25
ELEVATOR CONSTRUCTOR	26
ELEVATOR REPAIR & MAINTENANCE	27
ENGINEER	28
ENGINEER - CITY SURVEYOR AND CONSULTANT	33
ENGINEER - FIELD (BUILDING CONSTRUCTION)	34
ENGINEER - FIELD (HEAVY CONSTRUCTION)	35

ENGINEER - FIELD (STEEL ERECTION) 36
ENGINEER - OPERATING 37
FLOOR COVERER 44
GLAZIER 45
GLAZIER - REPAIR & MAINTENANCE 46
HAZARDOUS MATERIAL HANDLER 47
HEAT AND FROST INSULATOR 48
HOUSE WRECKER 49
IRON WORKER - ORNAMENTAL 49
IRON WORKER - STRUCTURAL 50
LABORER 51
LANDSCAPING 52
MARBLE MECHANIC 54
MASON TENDER 55
MASON TENDER (INTERIOR DEMOLITION WORKER) 56
METALLIC LATHER 57
MILLWRIGHT 57
MOSAIC MECHANIC 58
PAINTER 59
PAINTER - LINE STRIPING (ROADWAY) 60
PAINTER - METAL POLISHER 61
PAINTER - SIGN 62
PAINTER - STRUCTURAL STEEL 63
PAPERHANGER 64
PAVER AND ROADBUILDER 65
PLASTERER 67
PLASTERER - TENDER 67
PLUMBER 68

PLUMBER (MECHNICAL EQUIPMENT AND SERVICE) 69
PLUMBER (RESIDENTIAL RATES FOR 1, 2 AND 3 FAMILY HOME CONSTRUCTION) 70
PLUMBER: PUMP & TANK 71
POINTER, WATERPROOFER, CAULKER, SANDBLASTER, STEAMBLASTER 72
ROOFER 72
SHEET METAL WORKER 73
SHEET METAL WORKER - SPECIALTY 74
SHIPYARD WORKER 75
SIGN ERECTOR 77
STEAMFITTER 77
STEAMFITTER - REFRIGERATION AND AIR CONDITIONER 79
STONE MASON - SETTER 81
TAPER 82
TELECOMMUNICATION WORKER 83
TILE FINISHER 84
TILE LAYER - SETTER 85
TIMBERPERSON 85
TUNNEL WORKER 86
UTILITY LOCATOR 88
WELDER 90

ASBESTOS HANDLER
SEE HAZARDOUS MATERIAL HANDLER

BLASTER

Blaster

Effective Period: 7/1/2019 - 6/30/2020
Wage Rate per Hour: $55.86
Supplemental Benefit Rate per Hour: $44.48

Blaster- Hydraulic Trac Drill

Effective Period: 7/1/2019 - 6/30/2020
Wage Rate per Hour: $50.00
Supplemental Benefit Rate per Hour: $44.48

Blaster - Wagon: Air Trac: Quarry Bar: Drillrunners

Effective Period: 7/1/2019 - 6/30/2020
Wage Rate per Hour: $49.17
Supplemental Benefit Rate per Hour: $44.48

Blaster - Journeyperson

(Laborer, Chipper/Jackhammer including Walk Behind Self Propelled Hydraulic Asphalt and Concrete Breakers and Hydro (Water) Demolition, Powder Carrier, Hydraulic Chuck Tender, Chuck Tender and Nipper)

Effective Period: 7/1/2019 - 6/30/2020
Wage Rate per Hour: $42.65
Supplemental Benefit Rate per Hour: $44.48

Blaster - Magazine Keepers: (Watch Person)

Effective Period: 7/1/2019 - 6/30/2020
Wage Rate per Hour: $21.33
Supplemental Benefit Rate per Hour: $44.48

Overtime
Time and one half the regular rate after an 8 hour day.
Time and one half the regular rate for Saturday.
Double time the regular rate for Sunday.

Overtime Holidays
Double time the regular rate for work on the following holiday(s).
New Year's Day
Memorial Day
Independence Day
Labor Day
Columbus Day
Thanksgiving Day
Christmas Day

Paid Holidays
Labor Day
Thanksgiving Day

Shift Rates
When two shifts are employed, single time rate shall be paid for each shift. When three shifts are found necessary, each shift shall work seven and one half hours (7 ½), but shall be paid for eight (8) hours of labor, and be permitted one half hour for lunch.

(Local #731)

BOILERMAKER

Boilermaker

Effective Period: 7/1/2019 - 6/30/2020
Wage Rate per Hour: $59.17
Supplemental Benefit Rate per Hour: $44.59
Supplemental Note: For time and one half overtime - $66.44 For double overtime - $88.28

Overtime Description
For Repair and Maintenance work:
Time and one half the regular rate after an 8 hour day.
Time and one half the regular rate for Saturday.
Double time the regular rate for Sunday.
For New Construction work:
Double time the regular rate after an 8 hour day.
Double time the regular time rate for Saturday.
Double time the regular rate for Sunday.

Overtime Holidays
Double time the regular rate for work on the following holiday(s).
New Year's Day
President's Day
Memorial Day
Independence Day

Columbus Day
Election Day
Veteran's Day
Thanksgiving Day
Christmas Day

Quadruple time the regular rate for work on the following holiday(s).
Labor Day

Paid Holidays
Good Friday
Day after Thanksgiving
Day before Christmas
Day before New Year's Day

Shift Rates
When shifts are required, the first shift shall work eight (8) hours at the regular straight-time hourly rate. The second shift shall work seven and one-half (7 ½) hours and receive eight hours at the regular straight time hourly rate plus twenty-five cents ($0.25) per hour. The third shift shall work seven (7) hours and receive eight hours at the regular straight time hourly rate plus fifty cents ($0.50) per hour. A thirty (30) minute lunch period shall not be considered as time worked. Work in excess of the above shall be paid overtime at the appropriate new construction work or repair work overtime wage and supplemental benefit hourly rate.

(Local #5)

BRICKLAYER

Bricklayer

Effective Period: 7/1/2019 - 6/30/2020
Wage Rate per Hour: $56.32
Supplemental Benefit Rate per Hour: $33.11

Overtime
Time and one half the regular rate after a 7 hour day.
Time and one half the regular rate for Saturday.
Double time the regular rate for Sunday.
Saturday may be used as a make-up day at straight time when a day is lost during that week to inclement weather.

Overtime Holidays
Double time the regular rate for work on the following holiday(s).
New Year's Day
President's Day
Memorial Day
Independence Day
Labor Day

Thanksgiving Day
Christmas Day

Paid Holidays
None

Shift Rates
Overtime rates to be paid outside the regular scheduled work day.

(Bricklayer District Council)

CARPENTER - BUILDING COMMERCIAL

Building Commercial

Effective Period: 7/1/2019 - 6/30/2020
Wage Rate per Hour: $52.50
Supplemental Benefit Rate per Hour: $46.38

Overtime
Time and one half the regular rate after an 8 hour day.
Time and one half the regular rate for Saturday.
Double time the regular rate for Sunday.
Saturday may be used as a make-up day at straight time when a day is lost during that week to inclement weather.

Overtime Holidays
Double time the regular rate for work on the following holiday(s).
New Year's Day
Washington's Birthday
Memorial Day
Independence Day
Labor Day
Columbus Day
Presidential Election Day
Thanksgiving Day
Day after Thanksgiving
Christmas Day

Paid Holidays
None

Shift Rates
The employer may work two (2) shifts with the first shift at the straight time wage rate starting at the established time between 7 a.m. and 9 a.m. The second shift will receive one hour at the double time rate of pay for the last hour of the shift; eight (8) hours pay for seven (7) hours of work, nine (9) hours pay for eight (8) hours of work.

When it is not possible to conduct alteration work during regular working hours in a building occupied by tenants, the rule for the second shift will apply.

(Carpenters District Council)

CARPENTER - HEAVY CONSTRUCTION WORK
(Construction of Engineering Structures and Building Foundations)

Heavy Construction Work

Effective Period: 7/1/2019 - 6/30/2020
Wage Rate per Hour: $54.68
Supplemental Benefit Rate per Hour: $51.73

Overtime
Time and one half the regular rate after an 8 hour day.
Time and one half the regular rate for Saturday.
Double time the regular rate for Sunday.
Saturday may be used as a make-up day at straight time when a day is lost during that week to inclement weather.

Overtime Holidays
Double time the regular rate for work on the following holiday(s).
New Year's Day
President's Day
Memorial Day
Independence Day
Labor Day
Columbus Day
Presidential Election Day
Thanksgiving Day
Christmas Day

Paid Holidays
None

Shift Rates
Off shift work commencing between 5:00 P.M. and 11:00 P.M. shall work eight and one half hours allowing for one half hour for lunch. The wage rate shall be 113% of the straight time hourly wage rate.

(Carpenters District Council)

CARPENTER - HIGH RISE CONCRETE FORMS
(Excludes Engineering Structures and Building Foundations)

Carpenter High Rise A

Effective Period: 7/1/2019 - 6/30/2020
Wage Rate per Hour: $50.78
Supplemental Benefit Rate per Hour: $43.44

Carpenter High Rise B

Carpenter High Rise B worker is excluded from high risk operations such as erection decking, perimeter debris netting, leading edge work, self-climbing form systems, and the installation of cocoon systems unless directly supervised by a Carpenter High Rise A worker.

Effective Period: 7/1/2019 - 6/30/2020
Wage Rate per Hour: $40.19
Supplemental Benefit Rate per Hour: $16.75

Overtime
Time and one half the regular rate after an 8 hour day.
Time and one half the regular rate for Saturday.
Double time the regular rate for Sunday.
Saturday may be used as a make-up day at straight time when a day is lost during that week to inclement weather.

Overtime Holidays
Time and one half the regular rate for work on the following holiday(s).
New Year's Day
President's Day
Good Friday
Memorial Day
Independence Day
Labor Day
Columbus Day
Presidential Election Day
Thanksgiving Day
Christmas Day

Paid Holidays
None

Shift Rates
The second shift wage rate shall be 113% of the straight time hourly wage rate. There must be a first shift in order to work a second shift.

(Carpenters District Council)

CARPENTER - SIDEWALK SHED, SCAFFOLD AND HOIST

Carpenter - Hod Hoist

(Assisted by Mason Tender)

Effective Period: 7/1/2019 - 6/30/2020
Wage Rate per Hour: $50.50
Supplemental Benefit Rate per Hour: $39.56

Overtime
Time and one half the regular rate after an 8 hour day.
Time and one half the regular rate for Saturday.
Double time the regular rate for Sunday.
Saturday may be used as a make-up day at straight time when a day is lost during that week to inclement weather.

Overtime Holidays
Double time the regular rate for work on the following holiday(s).
New Year's Day
President's Day
Memorial Day
Independence Day
Labor Day
Columbus Day
Presidential Election Day
Thanksgiving Day
Day after Thanksgiving
Christmas Day

Paid Holidays
None

Shift Rates
The second shift will receive one hour at the double time rate of pay for the last hour of the shift; eight hours pay for seven hours of work, nine hours pay for eight hours of work. There must be a first shift in order to work a second shift.

(Carpenters District Council)

CARPENTER - WOOD WATER STORAGE TANK

Tank Mechanic

Effective Period: 7/1/2019 - 6/30/2020
Wage Rate per Hour: $34.14
Supplemental Benefit Rate per Hour: $19.00

Tank Helper

Effective Period: 7/1/2019 - 6/30/2020
Wage Rate per Hour: $27.30
Supplemental Benefit Rate per Hour: $19.00

Overtime
Time and one half the regular rate after an 8 hour day.
Time and one half the regular rate for Saturday.
Double time the regular rate for Sunday.
Time and one half the regular rate for work on a holiday plus the day's pay.

Paid Holidays
New Year's Day
President's Day
Good Friday
Memorial Day
Independence Day
Labor Day
Columbus Day
Thanksgiving Day
Day after Thanksgiving
1/2 day on Christmas Eve if work is performed in the A.M.
1/2 day on New Year's Eve if work is performed in the A.M.

Vacation
Employed for one (1) year.....one (1) week vacation (40 hours)
Employed for three (3) years.....two (2) weeks vacation (80 hours)
Employed for more than twenty (20) years.....three (3) weeks vacation (120 hours)

SICK LEAVE:
Two (2) sick days after being employed for twenty (20) years.

(Carpenters District Council)

CEMENT & CONCRETE WORKER

Cement & Concrete Worker

Effective Period: 7/1/2019 - 6/30/2020
Wage Rate per Hour: $43.53

Supplemental Benefit Rate per Hour: $28.95
Supplemental Note: $32.45 on Saturdays; $35.95 on Sundays & Holidays

Cement & Concrete Worker - (Hired after 2/6/2016)

Effective Period: 7/1/2019 - 6/30/2020
Wage Rate per Hour: $33.05
Supplemental Benefit Rate per Hour: $20.95
Supplemental Note: $22.45 on Saturdays; $23.95 on Sundays & Holidays

Overtime Description
Time and one half the regular rate after 7 hour day (time and one half the regular rate after an 8 hour day when working with Dockbuilders on pile cap forms and for work below street level to the top of the foundation wall, not to exceed 2 feet or 3 feet above the sidewalk-brick shelf, when working on the foundation and structure.)

Overtime
Time and one half the regular rate for Saturday.
Double time the regular rate for Sunday.

Overtime Holidays
Double time the regular rate for work on the following holiday(s).
New Year's Day
President's Day
Good Friday
Memorial Day
Independence Day
Labor Day
Columbus Day
Presidential Election Day
Thanksgiving Day
Christmas Day

Paid Holidays
1/2 day before Christmas Day
1/2 day before New Year's Day

Shift Rates
On shift work extending over a twenty-four hour period, all shifts are paid at straight time.

(Cement Concrete Workers District Council)

CEMENT MASON

Cement Mason

Effective Period: 7/1/2019 - 6/30/2020

Wage Rate per Hour: $44.97
Supplemental Benefit Rate per Hour: $40.56
Supplemental Note: Supplemental benefit time and one half rate: $71.19; Double time rate: double the base supplemental benefit rate.

Overtime Description
Time and one-half the regular rate after an 8 hour day, double time the regular rate after 10 hours. Time and one-half the regular rate on Saturday, double time the regular rate after 10 hours. Double time the regular rate on Sunday.

Overtime Holidays
Double time the regular rate for work on the following holiday(s).
New Year's Day
President's Day
Good Friday
Memorial Day
Independence Day
Labor Day
Columbus Day
Presidential Election Day
Thanksgiving Day
Christmas Day

Paid Holidays
Any worker who reports to work on Christmas Eve or New Year's Eve pursuant to his employer's instruction shall be entitled to three (3) hours afternoon pay without working.

Shift Rates
For an off shift day, (work at times other than the regular 7:00 A.M. to 3:30 P.M. work day) a cement mason shall be paid at the regular hourly rate plus a 25% per hour differential. Four Days a week at Ten (10)hour day.

(Local #780) (BCA)

CORE DRILLER

Core Driller

Effective Period: 7/1/2019 - 6/30/2020
Wage Rate per Hour: $40.44
Supplemental Benefit Rate per Hour: $26.70

Core Driller Helper

Effective Period: 7/1/2019 - 6/30/2020
Wage Rate per Hour: $32.12
Supplemental Benefit Rate per Hour: $26.70

Core Driller Helper(Third year in the industry)

Effective Period: 7/1/2019 - 6/30/2020
Wage Rate per Hour: $28.91
Supplemental Benefit Rate per Hour: $26.70

Core Driller Helper (Second year in the industry)

Effective Period: 7/1/2019 - 6/30/2020
Wage Rate per Hour: $25.70
Supplemental Benefit Rate per Hour: $26.70

Core Driller Helper (First year in the industry)

Effective Period: 7/1/2019 - 6/30/2020
Wage Rate per Hour: $22.48
Supplemental Benefit Rate per Hour: $26.70

Overtime Description
Time and one half the regular rate for work on a holiday plus Holiday pay when worked.

Overtime
Time and one half the regular rate after an 8 hour day.
Time and one half the regular rate for Saturday.
Double time the regular rate for Sunday.
Time and one half the regular rate for work on the following holiday(s).

Paid Holidays
New Year's Day
Memorial Day
Independence Day
Labor Day
Thanksgiving Day
Christmas Day

Shift Rates
The shift day shall be the continuous eight and one-half (8½) hours from 6:00 A.M. to 2:30 P.M. and from 2:30 P.M. to 11:00 P.M., including one-half (½) hour of employees regular rate of pay for lunch. When two (2) or more shifts are employed, single time shall be paid for each shift, but those employees employed on a shift other than from 8:00 A.M. to 5:00 P.M. shall, in addition, receive seventy-five cents ($0.75) per hour differential for each hour worked. When three (3) shifts are needed, each shift shall work seven and one-half (7 ½) hours paid for eight (8) hours of labor and be permitted one-half (½) hour for mealtime.

(Carpenters District Council)

DERRICKPERSON AND RIGGER

Derrick Person & Rigger

Effective Period: 7/1/2019 - 6/30/2020
Wage Rate per Hour: $50.91
Supplemental Benefit Rate per Hour: $54.11
Supplemental Note: The above supplemental rate applies for work performed in Manhattan, Bronx, Brooklyn and Queens. $55.53 - For work performed in Staten Island.

Derrick Person & Rigger - Site Work

Assists the Stone Mason-Setter in the setting of stone and paving stone.

Effective Period: 7/1/2019 - 6/30/2020
Wage Rate per Hour: $42.59
Supplemental Benefit Rate per Hour: $42.37

Overtime Description
The first two hours of overtime on weekdays and the first seven hours of work on Saturdays are paid at time and one half for wages and supplemental benefits. All additional overtimes is paid at double time for wages and supplemental benefits. Deduct $1.42 from the Staten Island hourly benefits rate before computing overtime.

Overtime
Double time the regular rate for Sunday.

Overtime Holidays
Double time the regular rate for work on the following holiday(s).
New Year's Day
Washington's Birthday
Good Friday
Memorial Day
Independence Day
Labor Day
Thanksgiving Day
Christmas Day

Paid Holidays
1/2 day on Christmas Eve if work is performed in the A.M.

(Local #197)

DIVER

Diver (Marine)

Effective Period: 7/1/2019 - 6/30/2020
Wage Rate per Hour: $69.22
Supplemental Benefit Rate per Hour: $51.73

Diver Tender (Marine)

Effective Period: 7/1/2019 - 6/30/2020
Wage Rate per Hour: $49.14
Supplemental Benefit Rate per Hour: $51.73

Overtime
Time and one half the regular rate after an 8 hour day.
Time and one half the regular rate for Saturday.
Double time the regular rate for Sunday.
Saturday may be used as a make-up day at straight time when a day is lost during that week to inclement weather.

Overtime Holidays
Double time the regular rate for work on the following holiday(s).
New Year's Day
President's Day
Memorial Day
Independence Day
Labor Day
Columbus Day
Presidential Election Day
Thanksgiving Day
Christmas Day

Paid Holidays
None

Shift Rates
When three shifts are utilized each shift shall work seven and one half-hours (7 1/2 hours) and paid for 8 hours, allowing for one half hour for lunch.

(Carpenters District Council)

DOCKBUILDER - PILE DRIVER

Dockbuilder - Pile Driver

Effective Period: 7/1/2019 - 6/30/2020
Wage Rate per Hour: $54.63
Supplemental Benefit Rate per Hour: $51.73

Overtime
Time and one half the regular rate after an 8 hour day.
Time and one half the regular rate for Saturday.
Double time the regular rate for Sunday.
Saturday may be used as a make-up day at straight time when a day is lost during that week to inclement weather.

Overtime Holidays
Double time the regular rate for work on the following holiday(s).
New Year's Day
President's Day
Memorial Day
Independence Day
Labor Day
Columbus Day
Presidential Election Day
Thanksgiving Day
Christmas Day

Paid Holidays
None

Shift Rates
Off shift work commencing between 5:00 P.M. and 11:00 P.M. shall work eight and one half hours allowing for one half hour for lunch. The wage rate shall be 113% of the straight time hourly wage rate.

(Carpenters District Council)

DRIVER: TRUCK (TEAMSTER)

Driver - Dump Truck

Effective Period: 7/1/2019 - 6/30/2020
Wage Rate per Hour: $41.18
Supplemental Benefit Rate per Hour: $49.65
Supplemental Note: Over 40 hours worked: at time and one half rate - $22.08; at double time rate - $29.44

Driver - Tractor Trailer

Effective Period: 7/1/2019 - 6/30/2020
Wage Rate per Hour: $43.84
Supplemental Benefit Rate per Hour: $49.03
Supplemental Note: Over 40 hours worked: at time and one half rate - $19.80; at double time rate - $26.40

Driver - Euclid & Turnapull Operator

Effective Period: 7/1/2019 - 6/30/2020
Wage Rate per Hour: $44.40
Supplemental Benefit Rate per Hour: $49.03
Supplemental Note: Over 40 hours worked: at time and one half rate - $19.80; at double time rate - $26.40

Overtime Description
For Paid Holidays: Holiday pay for all holidays shall be prorated based two hours per day for each day worked in the holiday week, not to exceed 8 hours of holiday pay. For Thanksgiving week, the prorated share shall be 5 1/3 hours of holiday pay for each day worked in Thanksgiving week.

Overtime
Time and one half the regular rate after an 8 hour day.
Time and one half the regular rate for Saturday.
Double time the regular rate for Sunday.

Overtime Holidays
Double time the regular rate for work on the following holiday(s).
New Year's Day
President's Day
Memorial Day
Independence Day
Labor Day
Columbus Day
Veteran's Day
Thanksgiving Day
Day after Thanksgiving
Christmas Day

Paid Holidays
New Year's Day
President's Day
Memorial Day
Independence Day
Labor Day
Columbus Day
Veteran's Day
Thanksgiving Day
Day after Thanksgiving
Christmas Day

Shift Rates
Off single shift work commencing between 6:00 P.M. and 5:00 A.M. shall work eight and one half (8 1/2) hours allowing for one half hour for lunch and be paid 117.3% of the straight time hourly wage rate.

Driver Redi-Mix (Sand & Gravel)

Effective Period: 7/1/2019 - 6/30/2020
Wage Rate per Hour: $39.00

Supplemental Benefit Rate per Hour: $45.52
Supplemental Note: Over 40 hours worked: time and one half rate $16.78; double time rate $22.37

Overtime Description
For Paid Holidays: Employees working two (2) days in the calendar week in which the holiday falls are to paid for these holidays, provided they shape each remaining workday during that calendar week.

Overtime
Time and one half the regular rate after an 8 hour day.
Time and one half the regular rate for Saturday.
Double time the regular rate for Sunday.

Overtime Holidays
Double time the regular rate for work on the following holiday(s).
President's Day
Columbus Day
Veteran's Day

Triple time the regular rate for work on the following holiday(s).
New Year's Day
Memorial Day
Independence Day
Labor Day
Thanksgiving Day
Christmas Day

Paid Holidays
New Year's Day
President's Day
Memorial Day
Independence Day
Labor Day
Columbus Day
Election Day
Thanksgiving Day
Christmas Day

(Local #282)

ELECTRICIAN
(Including installation of low voltage cabling carrying data, video and/or voice on building construction/alteration/renovation projects.)

Electrician "A" (Regular Day / Day Shift)

Effective Period: 7/1/2019 - 6/30/2020

Wage Rate per Hour: **$56.00**
Supplemental Benefit Rate per Hour: **$56.54**

Electrician "A" (Regular Day Overtime after 7 hrs / Day Shift Overtime after 8 hrs)

Effective Period: 7/1/2019 - 6/30/2020
Wage Rate per Hour: **$84.00**
Supplemental Benefit Rate per Hour: **$60.07**

Electrician "A" (Swing Shift)

Effective Period: 7/1/2019 - 6/30/2020
Wage Rate per Hour: **$65.71**
Supplemental Benefit Rate per Hour: **$64.36**

Electrician "A" (Swing Shift Overtime After 7.5 hours)

Effective Period: 7/1/2019 - 6/30/2020
Wage Rate per Hour: **$98.57**
Supplemental Benefit Rate per Hour: **$68.51**

Electrician "A" (Graveyard Shift)

Effective Period: 7/1/2019 - 6/30/2020
Wage Rate per Hour: **$73.60**
Supplemental Benefit Rate per Hour: **$70.94**

Electrician "A" (Graveyard Shift Overtime After 7 hours)

Effective Period: 7/1/2019 - 6/30/2020
Wage Rate per Hour: **$110.40**
Supplemental Benefit Rate per Hour: **$75.59**

Overtime
Time and one half the regular rate after a 7 hour day.
Time and one half the regular rate for Saturday.
Time and one half the regular rate for Sunday.

Overtime Holidays
Time and one half the regular rate for work on a holiday.
New Year's Day
Martin Luther King Jr. Day
President's Day
Memorial Day
Independence Day
Labor Day
Columbus Day
Veteran's Day
Thanksgiving Day
Day after Thanksgiving

Christmas Day

Paid Holidays
None

Shift Rates
When so elected by the Employer, one or more shifts of at least five days duration may be scheduled as follows: Day Shift: 8:00 am to 4:30 pm, Swing Shift 4:30 pm to 12:30 am, Graveyard Shift: 12:30 am to 8:00 am.

For multiple shifts of temporary light and/or power, the temporary light and/or power employee shall be paid for 8 hours at the straight time rate. For three or less workers performing 8 hours temporary light and/or power the supplemental benefit rate is $24.92.

Electrician "M" (First 8 hours)

"M" rated work shall be defined as jobbing: electrical work of limited duration and scope, also consisting of repairs and/or replacement of electrical and tele-data equipment. Includes all work necessary to retrofit, service, maintain and repair all kinds of lighting fixtures and local lighting controls and washing and cleaning of foregoing fixtures.

Effective Period: 7/1/2019 - 6/30/2020
Wage Rate per Hour: $29.00
Supplemental Benefit Rate per Hour: $23.43
First and Second Year "M" Wage Rate Per Hour: $24.50
First and Second Year "M" Supplemental Rate: $21.07

Electrician "M" (Overtime After First 8 hours)

"M" rated work shall be defined as jobbing: electrical work of limited duration and scope, also consisting of repairs and/or replacement of electrical and tele-data equipment. Includes all work necessary to retrofit, service, maintain and repair all kinds of lighting fixtures and local lighting controls and washing and cleaning of foregoing fixtures.

Effective Period: 7/1/2019 - 6/30/2020
Wage Rate per Hour: $43.50
Supplemental Benefit Rate per Hour: $25.26
First and Second Year "M" Wage Rate Per Hour: $36.75
First and Second Year "M" Supplemental Rate: $22.62

Overtime
Time and one half the regular rate after an 8 hour day.
Time and one half the regular rate for Saturday.
Time and one half the regular rate for Sunday.

Overtime Holidays
Time and one half the regular rate for work on the following holiday(s).
New Year's Day
Martin Luther King Jr. Day

President's Day
Memorial Day
Independence Day
Labor Day
Columbus Day
Veteran's Day
Thanksgiving Day
Day after Thanksgiving
Christmas Day

Paid Holidays
None

(Local #3)

ELECTRICIAN - ALARM TECHNICIAN
(Scope of Work - Inspect, test, repair, and replace defective, malfunctioning, or broken devices, components and controls of Fire, Burglar and Security Systems)

Alarm Technician

Effective Period: 7/1/2019 - 3/9/2020
Wage Rate per Hour: $33.40
Supplemental Benefit Rate per Hour: $17.68
Supplemental Note: $16.06 only after 8 hours worked in a day

Effective Period: 3/10/2020 - 6/30/2020
Wage Rate per Hour: $33.90
Supplemental Benefit Rate per Hour: $18.43
Supplemental Note: $16.80 only after 8 hours worked in a day

Overtime Description
Time and one half the regular rate for work on the following holidays: Columbus Day, Veterans Day, Day after Thanksgiving.
Double time the regular rate for work on the following holidays: New Year's day, Martin Luther King Jr. Day, President's Day, Memorial Day, Independence Day, Labor Day, Thanksgiving Day, Christmas Day.

Overtime
Time and one half the regular rate after an 8 hour day.
Time and one half the regular rate for Saturday.
Double time the regular rate for Sunday.

Paid Holidays
New Year's Day

Martin Luther King Jr. Day
President's Day
Memorial Day
Independence Day
Labor Day
Columbus Day
Veteran's Day
Thanksgiving Day
Day after Thanksgiving
Christmas Day

Shift Rates

Night Differential is based upon a ten percent (10%) differential between the hours of 4:00 P.M. and 12:30 A.M. and a fifteen percent (15%) differential for the hours 12:00 A.M. to 8:00 A.M.

Vacation

At least 1 year of employment.....ten (10) days
5 years or more of employment.....fifteen (15) days
10 years of employment.....twenty (20) days
Plus one Personal Day per year

Sick Days:
One day per Year. Up to 4 vacation days may be used as sick days.

(Local #3)

ELECTRICIAN-STREET LIGHTING WORKER

Electrician - Electro Pole Electrician

Effective Period: 7/1/2019 - 6/30/2020
Wage Rate per Hour: $56.00
Supplemental Benefit Rate per Hour: $58.44

Electrician - Electro Pole Foundation Installer

Effective Period: 7/1/2019 - 6/30/2020
Wage Rate per Hour: $42.66
Supplemental Benefit Rate per Hour: $43.52

Electrician - Electro Pole Maintainer

Effective Period: 7/1/2019 - 6/30/2020
Wage Rate per Hour: $36.61
Supplemental Benefit Rate per Hour: $39.16

Overtime Description

Electrician - Electro Pole Electrician: Time and one half the regular rate after a 7 hour day and after 5 consecutive days worked per week.
Electrician - Electro Pole Foundation Installer: Time and one half the regular rate after 8 hours within a 24 hour period and Saturday and Sunday.
Electrician - Electro Pole Maintainer: Time and one half the regular rate after a 7 hour day and after 5 consecutive days worked per week. Saturdays and Sundays may be used as a make-up day at straight time when a day is lost during the week to inclement weather.

Overtime Holidays

Time and one half the regular rate for work on the following holiday(s).
New Year's Day
Martin Luther King Jr. Day
President's Day
Memorial Day
Independence Day
Labor Day
Columbus Day
Veteran's Day
Thanksgiving Day
Day after Thanksgiving
Christmas Day

Paid Holidays

None

(Local #3)

ELEVATOR CONSTRUCTOR

Elevator Constructor

Effective Period: 7/1/2019 - 3/16/2020
Wage Rate per Hour: $66.95
Supplemental Benefit Rate per Hour: $36.65

Effective Period: 3/17/2020 - 6/30/2020
Wage Rate per Hour: $69.56
Supplemental Benefit Rate per Hour: $37.47

Overtime Description

For New Construction: work performed after 7 or 8 hour day, Saturday, Sunday or between 4:30pm and 7:00am shall be paid at double time rate.

Existing buildings: work performed after an 8 hour day, Saturday, Sunday or between 5:30pm and 7:00 am shall be paid time and one half.

Overtime

Double time the regular rate for work on the following holiday(s).

Paid Holidays
New Year's Day
President's Day
Good Friday
Memorial Day
Independence Day
Labor Day
Columbus Day
Veteran's Day
Thanksgiving Day
Day after Thanksgiving
Christmas Day

Vacation
Employer contributes 8% of regular basic hourly rate as vacation pay for employees with more than 15 years of service, and 6% for employees with 5 to 15 years of service, and 4% for employees with less than 5 years of service.

(Local #1)

ELEVATOR REPAIR & MAINTENANCE

Elevator Service/Modernization Mechanic

Effective Period: 7/1/2019 - 3/16/2020
Wage Rate per Hour: $52.44
Supplemental Benefit Rate per Hour: $36.55

Effective Period: 3/17/2020 - 6/30/2020
Wage Rate per Hour: $54.56
Supplemental Benefit Rate per Hour: $37.37

Overtime Description
For Scheduled Service Work: Double time - work scheduled in advance by two or more workers performed on Sundays, Holidays, and between midnight and 7:00am.

Overtime
Time and one half the regular rate after an 8 hour day.
Time and one half the regular rate for Saturday.
Time and one half the regular rate for Sunday.
Time and one half the regular rate for work on a holiday plus the day's pay.

Paid Holidays
New Year's Day
President's Day

Good Friday
Memorial Day
Independence Day
Labor Day
Columbus Day
Veteran's Day
Thanksgiving Day
Day after Thanksgiving
Christmas Day

Shift Rates

Afternoon shift - regularly hourly rate plus a (15%) fifteen percent differential. Graveyard shift - time and one half the regular rate.

Vacation

Employer contributes 8% of regular basic hourly rate as vacation pay for employees with more than 15 years of service, and 6% for employees with 5 to 15 years of service, and 4% for employees with less than 5 years of service.

(Local #1)

ENGINEER

Engineer - Heavy Construction Operating Engineer I

Cherrypickers 20 tons and over and Loaders (rubber tired and/or tractor type with a manufacturer's minimum rated capacity of six cubic yards and over).

Effective Period: 7/1/2019 - 6/30/2020
Wage Rate per Hour: $70.71
Supplemental Benefit Rate per Hour: $39.74
Supplemental Note: $72.08 on overtime
Shift Wage Rate: $113.14

Engineer - Heavy Construction Operating Engineer II

Backhoes, Basin Machines, Groover, Mechanical Sweepers, Bobcat, Boom Truck, Barrier Transport (Barrier Mover) & machines of similar nature. Operation of Churn Drills and machines of a similar nature, Stetco Silent Hoist and machines of similar nature, Vac-Alls, Meyers Machines, John Beam and machines of a similar nature, Ross Carriers and Travel Lifts and machines of a similar nature, Bulldozers, Scrapers and Turn-a-Pulls: Tugger Hoists (Used exclusively for handling excavated material); Tractors with attachments, Hyster and Roustabout Cranes, Cherrypickers. Austin Western, Grove and machines of a similar nature, Scoopmobiles, Monorails, Conveyors, Trenchers: Loaders-Rubber Tired and Tractor: Barber Greene and Eimco Loaders and Eimco Backhoes; Mighty Midget and similar breakers and Tampers, Curb and Gutter Pavers and Motor Patrol, Motor Graders and all machines of a similar nature. Locomotives 10 Tons or under. Mini-Max, Break-Tech and machines of a similar nature; Milling machines, robotic and demolition machines and machines of a similar nature, shot blaster, skid steer machines and machines of a similar nature including bobcat, pile rig rubber-tired excavator (37,000 lbs. and under), 2 man auger.

Effective Period: 7/1/2019 - 6/30/2020
Wage Rate per Hour: $68.58
Supplemental Benefit Rate per Hour: $39.74
Supplemental Note: $72.08 on overtime
Shift Wage Rate: $109.73

Engineer - Heavy Construction Operating Engineer III

Minor Equipment such as Tractors, Post Hole Diggers, Ditch Witch (Walk Behind), Road Finishing Machines, Rollers five tons and under, Tugger Hoists, Dual Purpose Trucks, Fork Lifts, and Dempsey Dumpers, Fireperson.

Effective Period: 7/1/2019 - 6/30/2020
Wage Rate per Hour: $65.00
Supplemental Benefit Rate per Hour: $39.74
Supplemental Note: $72.08 on overtime
Shift Wage Rate: $104.00

Engineer - Heavy Construction Maintenance Engineer I

Installing, Repairing, Maintaining, Dismantling and Manning of all equipment including Steel Cutting, Bending and Heat Sealing Machines, Mechanical Heaters, Grout Pumps, Bentonite Pumps & Plants, Screening Machines, Fusion Coupling Machines, Tunnel Boring Machines Moles and Machines of a similar nature, Power Packs, Mechanical Hydraulic Jacks; all drill rigs including but not limited to Churn, Rotary Caisson, Raised Bore & Drills of a similar nature; Personnel, Inspection & Safety Boats or any boats used to perform functions of same, Mine Hoists, Whirlies, all Climbing Cranes, all Tower Cranes, including but not limited to Truck Mounted and Crawler Type and machines of similar nature; Maintaining Hydraulic Drills and machines of a similar nature; Well Point System-Installation and dismantling; Burning, Welding, all Pumps regardless of size and/or motor power, except River Cofferdam Pumps and Wells Point Pumps; Motorized Buggies (three or more); equipment used in the cleaning and televising of sewers, but not limited to jet-rodder/vacuum truck, vacall/vactor, closed circuit television inspection equipment; high powered water pumps, jet pumps; screed machines and concrete finishing machines of a similar nature; vermeers.

Effective Period: 7/1/2019 - 6/30/2020
Wage Rate per Hour: $68.25
Supplemental Benefit Rate per Hour: $39.74
Supplemental Note: $72.08 on overtime
Shift Wage Rate: $109.20

Engineer - Heavy Construction Maintenance Engineer II

On Base Mounted Tower Cranes

Effective Period: 7/1/2019 - 6/30/2020
Wage Rate per Hour: $90.00
Supplemental Benefit Rate per Hour: $39.74
Supplemental Note: $72.08 on overtime
Shift Wage Rate: $144.00

Engineer - Heavy Construction Maintenance Engineer III

On Generators, Light Towers

Effective Period: 7/1/2019 - 6/30/2020
Wage Rate per Hour: $44.64
Supplemental Benefit Rate per Hour: $39.74
Supplemental Note: $72.08 on overtime
Shift Wage Rate: $71.42

Engineer - Heavy Construction Maintenance Engineer IV

On Pumps and Mixers including mud sucking

Effective Period: 7/1/2019 - 6/30/2020
Wage Rate per Hour: $45.83
Supplemental Benefit Rate per Hour: $39.74
Supplemental Note: $72.08 on overtime
Shift Wage Rate: $73.33

Engineer - Steel Erection Maintenance Engineers

Derrick, Travelers, Tower, Crawler Tower and Climbing Cranes

Effective Period: 7/1/2019 - 6/30/2020
Wage Rate per Hour: $65.31
Supplemental Benefit Rate per Hour: $39.74
Supplemental Note: $72.08 on overtime
Shift Wage Rate: $104.50

Engineer - Steel Erection Oiler I

On a Truck Crane

Effective Period: 7/1/2019 - 6/30/2020
Wage Rate per Hour: $61.05
Supplemental Benefit Rate per Hour: $39.74
Supplemental Note: $72.08 on overtime
Shift Wage Rate: $97.68

Engineer - Steel Erection Oiler II

On a Crawler Crane

Effective Period: 7/1/2019 - 6/30/2020
Wage Rate per Hour: $46.18
Supplemental Benefit Rate per Hour: $39.74
Supplemental Note: $72.08 on overtime
Shift Wage Rate: $73.89

Overtime Description

On jobs of more than one shift, if the next shift employee fails to report for work through any cause over which the employer has no control, the employee on duty who works the next shift continues to work at the single time rate.

Overtime

Double time the regular rate after an 8 hour day.
Double time the regular time rate for Saturday.
Double time the regular rate for Sunday.
Double time the regular rate for work on the following holiday(s).

Paid Holidays

New Year's Day
Lincoln's Birthday
President's Day
Memorial Day
Independence Day
Labor Day
Columbus Day
Veteran's Day
Thanksgiving Day
Day after Thanksgiving
Christmas Day
Employees must work at least one day in the payroll week in which the holiday occurs to receive the paid holiday

---

Engineer - Building Work Maintenance Engineers I

Installing, repairing, maintaining, dismantling (of all equipment including: Steel Cutting and Bending Machines, Mechanical Heaters, Mine Hoists, Climbing Cranes, Tower Cranes, Linden Peine, Lorain, Liebherr, Mannes, or machines of a similar nature, Well Point Systems, Deep Well Pumps, Concrete Mixers with loading Device, Concrete Plants, Motor Generators when used for temporary power and lights), skid steer machines of a similar nature including bobcat.

Effective Period: 7/1/2019 - 6/30/2020
Wage Rate per Hour: $62.45
Supplemental Benefit Rate per Hour: $39.74
Supplemental Note: $72.08 on overtime

Engineer - Building Work Maintenance Engineers II

On Pumps, Generators, Mixers and Heaters

Effective Period: 7/1/2019 - 6/30/2020
Wage Rate per Hour: $48.26
Supplemental Benefit Rate per Hour: $39.74
Supplemental Note: $72.08 on overtime

Engineer - Building Work Oilers I

All gasoline, electric, diesel or air operated Gradealls: Concrete Pumps, Overhead Cranes in Power Houses: Their duties shall be to assist the Engineer in oiling, greasing and repairing of all machines; Driving Truck Cranes: Driving and Operating Fuel and Grease Trucks, Cherrypickers (hydraulic cranes) over 70,000 GVW, and machines of a similar nature.

Effective Period: 7/1/2019 - 6/30/2020
Wage Rate per Hour: $59.33
Supplemental Benefit Rate per Hour: $39.74
Supplemental Note: $72.08 on overtime

Engineer - Building Work Oilers II

Oilers on Crawler Cranes, Backhoes, Trenching Machines, Gunite Machines, Compressors (three or more in Battery).

Effective Period: 7/1/2019 - 6/30/2020
Wage Rate per Hour: $43.78
Supplemental Benefit Rate per Hour: $39.74
Supplemental Note: $72.08 on overtime

Overtime Description
On jobs of more than one shift, if an Employee fails to report for work through any cause over which the Employer has no control, the Employee on duty will continue to work at the rate of single time.

Overtime
Double time the regular rate after an 8 hour day.
Double time the regular time rate for Saturday.
Double time the regular rate for Sunday.
Double time the regular rate for work on the following holiday(s).

Paid Holidays
New Year's Day
Lincoln's Birthday
President's Day
Memorial Day
Independence Day
Labor Day
Columbus Day
Veteran's Day
Thanksgiving Day
Christmas Day
Employees must work at least one day in the payroll week in which the holiday occurs to receive the paid holiday

Shift Rates
Off Shift: double time the regular hourly rate.

(Local #15)

ENGINEER - CITY SURVEYOR AND CONSULTANT

Party Chief

Effective Period: 7/1/2019 - 6/30/2020
Wage Rate per Hour: $40.41
Supplemental Benefit Rate per Hour: $22.75
Supplemental Note: Overtime Benefit Rate - $27.25 per hour (time & one half) $31.75 per hour (double time).

Instrument Person

Effective Period: 7/1/2019 - 6/30/2020
Wage Rate per Hour: $33.13
Supplemental Benefit Rate per Hour: $22.75
Supplemental Note: Overtime Benefit Rate - $27.25 per hour (time & one half) $31.75 per hour (double time).

Rodperson

Effective Period: 7/1/2019 - 6/30/2020
Wage Rate per Hour: $28.54
Supplemental Benefit Rate per Hour: $22.75
Supplemental Note: Overtime Benefit Rate - $27.25 per hour (time & one half) $31.75 per hour (double time).

Overtime Description

Time and one half the regular rate after an 8 hour day, Time and one half the regular rate for Saturday for the first eight hours worked, Double time the regular time rate for Saturday for work performed in excess of eight hours, Double time the regular rate for Sunday and Double time the regular rate for work on a holiday.

Paid Holidays

New Year's Day
Lincoln's Birthday
President's Day
Memorial Day
Independence Day
Labor Day
Columbus Day
Veteran's Day
Thanksgiving Day
Day after Thanksgiving
Christmas Day
Employees must work at least one day in the payroll week in which the holiday occurs to receive the paid holiday

(Operating Engineer Local #15-D)

ENGINEER - FIELD (BUILDING CONSTRUCTION)
(Construction of Building Projects, Concrete Superstructures, etc.)

Field Engineer - BC Party Chief

Effective Period: 7/1/2019 - 6/30/2020
Wage Rate per Hour: $65.44
Supplemental Benefit Rate per Hour: $35.12
Supplemental Note: Overtime Benefit Rate - $49.33 per hour (time & one half) $63.54 per hour (double time).

Field Engineer - BC Instrument Person

Effective Period: 7/1/2019 - 6/30/2020
Wage Rate per Hour: $50.83
Supplemental Benefit Rate per Hour: $35.12
Supplemental Note: Overtime Benefit Rate - $49.33 per hour (time & one half) $63.54 per hour (double time).

Field Engineer - BC Rodperson

Effective Period: 7/1/2019 - 6/30/2020
Wage Rate per Hour: $32.84
Supplemental Benefit Rate per Hour: $35.12
Supplemental Note: Overtime Benefit Rate - $49.33 per hour (time & one half) $63.54 per hour (double time).

Overtime Description
Time and one half the regular rate after a 7 hour work and time and one half the regular rate for Saturday for the first seven hours worked, Double time the regular time rate for Saturday for work performed in excess of seven hours, Double time the regular rate for Sunday and Double time the regular rate for work on a holiday.

Paid Holidays
New Year's Day
President's Day
Good Friday
Memorial Day
Independence Day
Labor Day
Columbus Day
Veteran's Day
Thanksgiving Day
Christmas Day
Employees must work at least one day in the payroll week in which the holiday occurs to receive the paid holiday

(Operating Engineer Local #15-D)

ENGINEER - FIELD (HEAVY CONSTRUCTION)

(Construction of Roads, Tunnels, Bridges, Sewers, Building Foundations, Engineering Structures etc.)

Field Engineer - HC Party Chief

Effective Period: 7/1/2019 - 6/30/2020
Wage Rate per Hour: $74.18
Supplemental Benefit Rate per Hour: $36.51
Supplemental Note: Overtime benefit rate - $51.29 per hour (time & one half), $66.07 per hour (double time).

Field Engineer - HC Instrument Person

Effective Period: 7/1/2019 - 6/30/2020
Wage Rate per Hour: $54.47
Supplemental Benefit Rate per Hour: $36.51
Supplemental Note: Overtime benefit rate - $51.29 per hour (time & one half), $66.07 per hour (double time).

Field Engineer - HC Rodperson

Effective Period: 7/1/2019 - 6/30/2020
Wage Rate per Hour: $45.70
Supplemental Benefit Rate per Hour: $36.51
Supplemental Note: Overtime benefit rate - $51.29 per hour (time & one half), $66.07 per hour (double time).

Overtime Description

Time and one half the regular rate after an 8 hour day, Time and one half the regular rate for Saturday for the first eight hours worked, Double time the regular time rate for Saturday for work performed in excess of eight hours, Double time the regular rate for Sunday and Double time the regular rate for work on a holiday.

Paid Holidays

New Year's Day
Lincoln's Birthday
President's Day
Memorial Day
Independence Day
Labor Day
Columbus Day
Veteran's Day
Thanksgiving Day
Christmas Day
Employees must work at least one day in the payroll week in which the holiday occurs to receive the paid holiday

(Operating Engineer Local #15-D)

ENGINEER - FIELD (STEEL ERECTION)

Field Engineer - Steel Erection Party Chief

Effective Period: 7/1/2019 - 6/30/2020
Wage Rate per Hour: $69.15
Supplemental Benefit Rate per Hour: $36.01
Supplemental Note: Overtime benefit rate - $50.54 per hour (time & one half), $65.07 per hour (double time).

Field Engineer - Steel Erection Instrument Person

Effective Period: 7/1/2019 - 6/30/2020
Wage Rate per Hour: $53.88
Supplemental Benefit Rate per Hour: $36.01
Supplemental Note: Overtime benefit rate - $50.54 per hour (time & one half), $65.07 per hour (double time).

Field Engineer - Steel Erection Rodperson

Effective Period: 7/1/2019 - 6/30/2020
Wage Rate per Hour: $36.04
Supplemental Benefit Rate per Hour: $36.01
Supplemental Note: Overtime benefit rate - $50.54 per hour (time & one half), $65.07 per hour (double time).

Overtime Description

Time and one half the regular rate for Saturday for the first eight hours worked.
Double time the regular rate for Saturday for work performed in excess of eight hours.

Overtime

Time and one half the regular rate after an 8 hour day.
Double time the regular rate for Sunday.
Double time the regular rate for work on the following holiday(s).

Paid Holidays

New Year's Day
Lincoln's Birthday
President's Day
Memorial Day
Independence Day
Labor Day
Columbus Day
Veteran's Day
Thanksgiving Day
Christmas Day
Employees must work at least one day in the payroll week in which the holiday occurs to receive the paid holiday

(Operating Engineer Local #15-D)

ENGINEER - OPERATING

Operating Engineer - Road & Heavy Construction I

Back Filling Machines, Cranes, Mucking Machines and Dual Drum Paver.

Effective Period: 7/1/2019 - 6/30/2020
Wage Rate per Hour: $81.17
Supplemental Benefit Rate per Hour: $32.95
Supplemental Note: $59.95 overtime hours
Shift Wage Rate: $129.87

Operating Engineer - Road & Heavy Construction II

Backhoes, Power Shovels, Hydraulic Clam Shells, Steel Erection, Moles and machines of a similar nature.

Effective Period: 7/1/2019 - 6/30/2020
Wage Rate per Hour: $84.01
Supplemental Benefit Rate per Hour: $32.95
Supplemental Note: $59.95 overtime hours
Shift Wage Rate: $134.42

Operating Engineer - Road & Heavy Construction III

Mine Hoists, Cranes, etc. (Used as Mine Hoists)

Effective Period: 7/1/2019 - 6/30/2020
Wage Rate per Hour: $86.69
Supplemental Benefit Rate per Hour: $32.95
Supplemental Note: $59.95 overtime hours
Shift Wage Rate: $138.70

Operating Engineer - Road & Heavy Construction IV

Gradealls, Keystones, Cranes on land or water (with digging buckets), Bridge Cranes, Vermeer Cutter and machines of a similar nature, Trenching Machines.

Effective Period: 7/1/2019 - 6/30/2020
Wage Rate per Hour: $84.62
Supplemental Benefit Rate per Hour: $32.95
Supplemental Note: $59.95 overtime hours
Shift Wage Rate: $135.39

Operating Engineer - Road & Heavy Construction V

Pile Drivers & Rigs (employing Dock Builder foreperson): Derrick Boats, Tunnel Shovels.

Effective Period: 7/1/2019 - 6/30/2020
Wage Rate per Hour: $82.96
Supplemental Benefit Rate per Hour: $32.95
Supplemental Note: $59.95 overtime hours
Shift Wage Rate: $132.74

Operating Engineer - Road & Heavy Construction VI

Mixers (Concrete with loading attachment), Concrete Pavers, Cableways, Land Derricks, Power Houses (Low Air Pressure Units).

Effective Period: 7/1/2019 - 6/30/2020
Wage Rate per Hour: $78.85
Supplemental Benefit Rate per Hour: $32.95
Supplemental Note: $59.95 overtime hours
Shift Wage Rate: $126.16

Operating Engineer - Road & Heavy Construction VII

Barrier Movers , Barrier Transport and Machines of a Similar Nature.

Effective Period: 7/1/2019 - 6/30/2020
Wage Rate per Hour: $63.81
Supplemental Benefit Rate per Hour: $32.95
Supplemental Note: $59.95 overtime hours
Shift Wage Rate: $102.10

Operating Engineer - Road & Heavy Construction VIII

Utility Compressors

Effective Period: 7/1/2019 - 6/30/2020
Wage Rate per Hour: $49.67
Supplemental Benefit Rate per Hour: $32.95
Supplemental Note: $59.95 overtime hours
Shift Wage Rate: $62.44

Operating Engineer - Road & Heavy Construction IX

Horizontal Boring Rig

Effective Period: 7/1/2019 - 6/30/2020
Wage Rate per Hour: $75.02
Supplemental Benefit Rate per Hour: $32.95
Supplemental Note: $59.95 overtime hours
Shift Wage Rate: $120.03

Operating Engineer - Road & Heavy Construction X

Elevators (manually operated as personnel hoist).

Effective Period: 7/1/2019 - 6/30/2020
Wage Rate per Hour: $69.01
Supplemental Benefit Rate per Hour: $32.95
Supplemental Note: $59.95 overtime hours
Shift Wage Rate: $110.42

Operating Engineer - Road & Heavy Construction XI

Compressors (Portable 3 or more in battery), Driving of Truck Mounted Compressors, Well-point Pumps, Tugger Machines Well Point Pumps, Churn Drill.

Effective Period: 7/1/2019 - 6/30/2020
Wage Rate per Hour: $53.74
Supplemental Benefit Rate per Hour: $32.95
Supplemental Note: $59.95 overtime hours
Shift Wage Rate: $85.98

Operating Engineer - Road & Heavy Construction XII

All Drills and Machines of a similar nature.

Effective Period: 7/1/2019 - 6/30/2020
Wage Rate per Hour: $79.68
Supplemental Benefit Rate per Hour: $32.95
Supplemental Note: $59.95 overtime hours
Shift Wage Rate: $127.49

Operating Engineer - Road & Heavy Construction XIII

Concrete Pumps, Concrete Plant, Stone Crushers, Double Drum Hoist, Power Houses (other than above).

Effective Period: 7/1/2019 - 6/30/2020
Wage Rate per Hour: $77.19
Supplemental Benefit Rate per Hour: $32.95
Supplemental Note: $59.95 overtime hours
Shift Wage Rate: $123.50

Operating Engineer - Road & Heavy Construction XIV

Concrete Mixer

Effective Period: 7/1/2019 - 6/30/2020
Wage Rate per Hour: $73.82
Supplemental Benefit Rate per Hour: $32.95
Supplemental Note: $59.95 overtime hours
Shift Wage Rate: $118.11

Operating Engineer - Road & Heavy Construction XV

Compressors (Portable Single or two in Battery, not over 100 feet apart), Pumps (River Cofferdam) and Welding Machines, Push Button Machines, All Engines Irrespective of Power (Power-Pac) used to drive auxiliary equipment, Air, Hydraulic, etc.

Effective Period: 7/1/2019 - 6/30/2020
Wage Rate per Hour: $49.99
Supplemental Benefit Rate per Hour: $32.95
Supplemental Note: $59.95 overtime hours
Shift Wage Rate: $79.98

Operating Engineer - Road & Heavy Construction XVI

Concrete Breaking Machines, Hoists (Single Drum), Load Masters, Locomotives (over ten tons) and Dinkies over ten tons, Hydraulic Crane-Second Engineer.

Effective Period: 7/1/2019 - 6/30/2020
Wage Rate per Hour: $70.53
Supplemental Benefit Rate per Hour: $32.95
Supplemental Note: $59.95 overtime hours
Shift Wage Rate: $112.85

Operating Engineer - Road & Heavy Construction XVII

On-Site concrete plant engineer, On-site Asphalt Plant Engineer, and Vibratory console.

Effective Period: 7/1/2019 - 6/30/2020
Wage Rate per Hour: $71.06
Supplemental Benefit Rate per Hour: $32.95
Supplemental Note: $59.95 overtime hours
Shift Wage Rate: $113.70

Operating Engineer - Road & Heavy Construction XVIII

Tower Crane

Effective Period: 7/1/2019 - 6/30/2020
Wage Rate per Hour: $101.71
Supplemental Benefit Rate per Hour: $32.95
Supplemental Note: $59.95 overtime hours
Shift Wage Rate: $162.74

Operating Engineer - Paving I

Asphalt Spreaders, Autogrades (C.M.I.), Roto/Mil

Effective Period: 7/1/2019 - 6/30/2020
Wage Rate per Hour: $78.85
Supplemental Benefit Rate per Hour: $32.95
Supplemental Note: $59.95 overtime hours

Shift Wage Rate: $126.16

Operating Engineer - Paving II

Asphalt Roller

Effective Period: 7/1/2019 - 6/30/2020
Wage Rate per Hour: $76.83
Supplemental Benefit Rate per Hour: $32.95
Supplemental Note: $59.95 overtime hours
Shift Wage Rate: $122.93

Operating Engineer - Paving III

Asphalt Plants

Effective Period: 7/1/2019 - 6/30/2020
Wage Rate per Hour: $65.08
Supplemental Benefit Rate per Hour: $32.95
Supplemental Note: $59.95 overtime hours
Shift Wage Rate: $104.13

Operating Engineer - Concrete I

Cranes

Effective Period: 7/1/2019 - 6/30/2020
Wage Rate per Hour: $84.25
Supplemental Benefit Rate per Hour: $32.95
Supplemental Note: $59.95 overtime hours

Operating Engineer - Concrete II

Compressors

Effective Period: 7/1/2019 - 6/30/2020
Wage Rate per Hour: $50.37
Supplemental Benefit Rate per Hour: $32.95
Supplemental Note: $59.95 overtime hours

Operating Engineer - Concrete III

Micro-traps (Negative Air Machines), Vac-All Remediation System.

Effective Period: 7/1/2019 - 6/30/2020
Wage Rate per Hour: $67.45
Supplemental Benefit Rate per Hour: $32.95
Supplemental Note: $59.95 overtime hours

Operating Engineer - Steel Erection I

Three Drum Derricks

Effective Period: 7/1/2019 - 6/30/2020
Wage Rate per Hour: $87.14
Supplemental Benefit Rate per Hour: $32.95
Supplemental Note: $59.95 overtime hours
Shift Wage Rate: $139.42

Operating Engineer - Steel Erection II

Cranes, 2 Drum Derricks, Hydraulic Cranes, Fork Lifts and Boom Trucks.

Effective Period: 7/1/2019 - 6/30/2020
Wage Rate per Hour: $83.75
Supplemental Benefit Rate per Hour: $32.95
Supplemental Note: $59.95 overtime hours
Shift Wage Rate: $134.00

Operating Engineer - Steel Erection III

Compressors, Welding Machines.

Effective Period: 7/1/2019 - 6/30/2020
Wage Rate per Hour: $49.95
Supplemental Benefit Rate per Hour: $32.95
Supplemental Note: $59.95overtime hours
Shift Wage Rate: $79.92

Operating Engineer - Steel Erection IV

Compressors - Not Combined with Welding Machine.

Effective Period: 7/1/2019 - 6/30/2020
Wage Rate per Hour: $47.58
Supplemental Benefit Rate per Hour: $32.95
Supplemental Note: $59.95 overtime hours
Shift Wage Rate: $76.13

Operating Engineer - Building Work I

Forklifts, Plaster (Platform machine), Plaster Bucket, Concrete Pump and all other equipment used for hoisting material.

Effective Period: 7/1/2019 - 6/30/2020
Wage Rate per Hour: $69.51
Supplemental Benefit Rate per Hour: $32.95
Supplemental Note: $59.95 overtime hours

Operating Engineer - Building Work II

Compressors, Welding Machines (Cutting Concrete-Tank Work), Paint Spraying, Sandblasting, Pumps (with the exclusion of Concrete Pumps), All Engines irrespective of Power (Power-Pac) used to drive Auxiliary Equipment, Air, Hydraulic, Jacking System, etc.

Effective Period: 7/1/2019 - 6/30/2020
Wage Rate per Hour: $52.21
Supplemental Benefit Rate per Hour: $32.95
Supplemental Note: $59.95 overtime hours

Operating Engineer - Building Work III

Double Drum

Effective Period: 7/1/2019 - 6/30/2020
Wage Rate per Hour: $79.02
Supplemental Benefit Rate per Hour: $32.95
Supplemental Note: $59.95 overtime hours

Operating Engineer - Building Work IV

Stone Derrick, Cranes, Hydraulic Cranes Boom Trucks.

Effective Period: 7/1/2019 - 6/30/2020
Wage Rate per Hour: $83.68
Supplemental Benefit Rate per Hour: $32.95
Supplemental Note: $59.95 overtime hours

Operating Engineer - Building Work V

Dismantling and Erection of Cranes, Relief Engineer.

Effective Period: 7/1/2019 - 6/30/2020
Wage Rate per Hour: $77.15
Supplemental Benefit Rate per Hour: $32.95
Supplemental Note: $59.95 overtime hours

Operating Engineer - Building Work VI

4 Pole Hoist, Single Drum Hoists.

Effective Period: 7/1/2019 - 6/30/2020
Wage Rate per Hour: $76.35
Supplemental Benefit Rate per Hour: $32.95
Supplemental Note: $59.95 overtime hours

Operating Engineer - Building Work VII

Rack & Pinion and House Cars

Effective Period: 7/1/2019 - 6/30/2020
Wage Rate per Hour: $60.84
Supplemental Benefit Rate per Hour: $32.95
Supplemental Note: $59.95 overtime hours
For New House Car projects Wage Rate per Hour $48.70

Overtime Description
On jobs of more than one shift, if an Employee fails to report for work through any cause over which the Employer has no control, the Employee on duty will continue to work at the rate of single time.

For House Cars and Rack & Pinion only: Overtime paid at time and one-half for all hours in excess of eight hours in a day, Saturday, Sunday and Holidays worked.

Overtime
Double time the regular rate after an 8 hour day.
Double time the regular time rate for Saturday.
Double time the regular rate for Sunday.
Double time the regular rate for work on the following holiday(s).

Paid Holidays
New Year's Day
Lincoln's Birthday
President's Day
Memorial Day
Independence Day
Labor Day
Columbus Day
Veteran's Day
Thanksgiving Day
Day after Thanksgiving
Christmas Day
Employees must work at least one day in the payroll week in which the holiday occurs to receive the paid holiday

Shift Rates
For Steel Erection Only: Shifts may be worked at the single time rate at other than the regular working hours (8:00 A.M. to 4:30 P.M.) on the following work ONLY: Heavy construction jobs on work below the street level, over railroad tracks and on building jobs.

(Operating Engineer Local #14)

FLOOR COVERER
(Interior vinyl composition tile, sheath vinyl linoleum and wood parquet tile including site preparation and synthetic turf not including site preparation)

Floor Coverer

Effective Period: 7/1/2019 - 6/30/2020
Wage Rate per Hour: $50.50
Supplemental Benefit Rate per Hour: $45.98

Overtime
Time and one half the regular rate after an 8 hour day.
Time and one half the regular rate for Saturday.
Double time the regular rate for Sunday.

Overtime Holidays
Double time the regular rate for work on the following holiday(s).
New Year's Day
President's Day
Memorial Day
Independence Day
Labor Day
Columbus Day
Presidential Election Day
Thanksgiving Day
Day after Thanksgiving
Christmas Day

Paid Holidays
1/2 day on Christmas Eve if work is performed in the A.M.
1/2 day on New Year's Eve if work is performed in the A.M.

Shift Rates
Two shifts may be utilized with the first shift working 8 a.m. to the end of the shift at straight time rate of pay. The wage rate for the second shift consisting of 7 hours shall be paid at 114.29% of straight time wage rate. The wage rate for the second shift consisting of 8 hours shall be paid 112.5% of the straight time wage rate.
There must be a first shift to work the second shift.

(Carpenters District Council)

GLAZIER
(New Construction, Remodeling, and Alteration)

Glazier

Effective Period: 7/1/2019 - 6/30/2020
Wage Rate per Hour: $46.05
Supplemental Benefit Rate per Hour: $43.39
Supplemental Note: Supplemental Benefit Overtime Rate: $65.10

Overtime
Time and one half the regular rate after an 8 hour day.
Time and one half the regular rate for Saturday.
Time and one half the regular rate for Sunday.

Overtime Holidays
Time and one half the regular rate for work on the following holiday(s).
New Year's Day
President's Day
Memorial Day
Independence Day
Thanksgiving Day
Day after Thanksgiving
Christmas Day

Paid Holidays
None

Shift Rates
Shifts shall be any 8 consecutive hours after the normal working day for which the Glazier shall receive 9 hours pay for 8 hours worked.

(Local #1281)

GLAZIER - REPAIR & MAINTENANCE
(For the Installation of Glass - All repair and maintenance work on a particular building, whenever performed, where the total cumulative contract value is under $141,750)

Craft Jurisdiction for repair, maintenance and fabrication

Plate glass replacement, Residential glass replacement, Residential mirrors and shower doors, Storm windows and storm doors, Residential replacement windows, Herculite door repairs, Door closer repairs, Retrofit apartment house (non-commercial buildings), Glass tinting.

Effective Period: 7/1/2019 - 6/30/2020
Wage Rate per Hour: $25.64
Supplemental Benefit Rate per Hour: $22.29

Overtime
Time and one half the regular rate after an 8 hour day.
Time and one half the regular rate for Sunday.
Time and one half the regular rate for work on the following holiday(s).

Time and one half the regular hourly rate after 40 hours in any work week.

Paid Holidays
New Year's Day
President's Day
Memorial Day
Independence Day
Labor Day
Thanksgiving Day
Day after Thanksgiving
Christmas Day
Employees must work at least one day in the payroll week in which the holiday occurs to receive the paid holiday

(Local #1281)

HAZARDOUS MATERIAL HANDLER
(Removal, abatement, encapsulation or decontamination of asbestos, lead, mold, or other toxic or hazardous waste/materials)

Handler

Effective Period: 7/1/2019 - 6/30/2020
Wage Rate per Hour: $36.50
Supplemental Benefit Rate per Hour: $16.45

Overtime
Time and one half the regular rate after an 8 hour day.
Time and one half the regular rate for Sunday.
Time and one half the regular hourly rate after 40 hours in any work week.

Overtime Holidays
Time and one half the regular rate for work on the following holiday(s).
New Year's Day
Good Friday
Memorial Day
Independence Day
Labor Day
Thanksgiving Day
Christmas Day
Easter

Paid Holidays
None

(Local #78 and Local #12A)

HEAT AND FROST INSULATOR

Heat & Frost Insulator

Effective Period: 7/1/2019 - 6/30/2020
Wage Rate per Hour: $61.46
Supplemental Benefit Rate per Hour: $40.46

Overtime Description
Double time shall be paid for supplemental benefits during overtime work.
8th hour paid at time and one half.

Overtime
Double time the regular rate after an 8 hour day.
Double time the regular time rate for Saturday.
Double time the regular rate for Sunday.

Overtime Holidays
Double time the regular rate for work on the following holiday(s).
New Year's Day
Martin Luther King Jr. Day
President's Day
Memorial Day
Independence Day
Columbus Day
Veteran's Day
Thanksgiving Day
Day after Thanksgiving
Christmas Day

Triple time the regular rate for work on the following holiday(s).
Labor Day

Paid Holidays
None

Shift Rates
The first shift shall work seven hours at the regular straight time rate. The second and third shift shall work seven hours the regular straight time hourly rate plus a fourteen percent wage and benefit premium.

(Local #12) (BCA)

HOUSE WRECKER
(TOTAL DEMOLITION)

House Wrecker - Tier A

On all work sites the first, second, eleventh and every third House Wrecker thereafter will be Tier A House Wreckers (i.e. 1st, 2nd, 11th, 14th etc). Other House Wreckers may be Tier B House Wreckers.

Effective Period: 7/1/2019 - 6/30/2020
Wage Rate per Hour: $37.18
Supplemental Benefit Rate per Hour: $29.77

House Wrecker - Tier B

Effective Period: 7/1/2019 - 6/30/2020
Wage Rate per Hour: $26.41
Supplemental Benefit Rate per Hour: $22.18

Overtime
Time and one half the regular rate after an 8 hour day.
Time and one half the regular rate for Saturday.
Double time the regular rate for Sunday.

Overtime Holidays
Double time the regular rate for work on the following holiday(s).
New Year's Day
President's Day
Memorial Day
Independence Day
Labor Day
Thanksgiving Day
Christmas Day

Paid Holidays
None

(Mason Tenders District Council)

IRON WORKER - ORNAMENTAL

Iron Worker - Ornamental

Effective Period: 7/1/2019 - 6/30/2020

Wage Rate per Hour: $45.15
Supplemental Benefit Rate per Hour: $55.62
Supplemental Note: Supplemental benefits are to be paid at the applicable overtime rate when overtime is in effect.

Overtime Description
Time and one half the regular rate after a 7 hour day for a maximum of two hours on any regular work day (the 8th and 9th hour) and double time shall be paid for all work on a regular work day thereafter, time and one half the regular rate for Saturday for the first seven hours of work and double time shall be paid for all work on a Saturday thereafter.

Overtime
Double time the regular rate for Sunday.

Overtime Holidays
Double time the regular rate for work on the following holiday(s).
New Year's Day
President's Day
Memorial Day
Independence Day
Labor Day
Thanksgiving Day
Christmas Day

Paid Holidays
None

Shift Rates
For off shift work - 8 hours pay for 7 hours of work. When two or three shifts are employed on a job, Monday through Friday, the workday for each shift shall be seven hours and paid for ten and one-half hours at the single time rate. When two or three shifts are worked on Saturday, Sunday or holidays, each shift shall be seven hours and paid fifteen and three-quarters hours.

(Local #580)

IRON WORKER - STRUCTURAL

Iron Worker - Structural

Effective Period: 7/1/2019 - 6/30/2020
Wage Rate per Hour: $51.05
Supplemental Benefit Rate per Hour: $76.89
Supplemental Note: Supplemental benefits are to be paid at the applicable overtime rate when overtime is in effect.

Overtime Description

Monday through Friday- the first eight hours are paid at straight time, the 9th and 10th hours are paid at time and one-half the regular rate, all additional weekday overtime is paid at double the regular rate. Saturdays- the first eight hours are paid at time and one-half the regular rate, double time thereafter. Sunday-all shifts are paid at double time.

Overtime

Time and one half the regular rate after an 8 hour day.
Time and one half the regular rate for Saturday.
Double time the regular rate for Sunday.

Overtime Holidays

Double time the regular rate for work on the following holiday(s).
New Year's Day
President's Day
Memorial Day
Independence Day
Labor Day
Thanksgiving Day
Christmas Day

Paid Holidays

1/2 day on Christmas Eve if work is performed in the A.M.
1/2 day on New Year's Eve if work is performed in the A.M.

Shift Rates

Monday through Friday - First Shift: First eight hours are paid at straight time, the 9th & 10th hours are paid at time and a half, double time paid thereafter. Second and third Shifts: First eight hours are paid at time and one-half, double time thereafter. Saturdays: All shifts, first eight hours paid at time and one-half, double time thereafter: Sunday all shifts are paid at double time.

(Local #40 & #361)

LABORER
(Foundation, Concrete, Excavating, Street Pipe Layer and Common)

Laborer

Excavation and foundation work for buildings, heavy construction, engineering work, and hazardous waste removal in connection with the above work. Landscaping tasks in connection with heavy construction work, engineering work and building projects. Projects include, but are not limited to pollution plants, sewers, parks, subways, bridges, highways, etc.

Effective Period: 7/1/2019 - 6/30/2020
Wage Rate per Hour: $42.65
Supplemental Benefit Rate per Hour: $44.48

Overtime
Time and one half the regular rate after an 8 hour day.
Time and one half the regular rate for Saturday.
Double time the regular rate for Sunday.

Overtime Holidays
Double time the regular rate for work on the following holiday(s).
New Year's Day
Memorial Day
Independence Day
Labor Day
Columbus Day
Thanksgiving Day
Christmas Day

Paid Holidays
Labor Day
Thanksgiving Day

Shift Rates
When two shifts are employed, single time rate shall be paid for each shift. When three shifts are found necessary, each shift shall work seven and one half hours (7 ½), but shall be paid for eight (8) hours of labor, and be permitted one half hour for lunch.

(Local #731)

LANDSCAPING
(Landscaping tasks, as well as tree pruning, tree removing, spraying and maintenance in connection with the planting of street trees and the planting of trees in city parks but not when such activities are performed as part of, or in connection with, other construction or reconstruction projects.)

Landscaper (Year 6 and above)

Effective Period: 7/1/2019 - 6/30/2020
Wage Rate per Hour: $31.75
Supplemental Benefit Rate per Hour: $16.05

Landscaper (Year 3 - 5)

Effective Period: 7/1/2019 - 6/30/2020
Wage Rate per Hour: $30.72
Supplemental Benefit Rate per Hour: $16.05

Landscaper (up to 3 years)

Effective Period: 7/1/2019 - 6/30/2020
Wage Rate per Hour: $28.14
Supplemental Benefit Rate per Hour: $16.05

Groundperson

Effective Period: 7/1/2019 - 6/30/2020
Wage Rate per Hour: $28.14
Supplemental Benefit Rate per Hour: $16.05

Tree Remover / Pruner

Effective Period: 7/1/2019 - 6/30/2020
Wage Rate per Hour: $36.92
Supplemental Benefit Rate per Hour: $16.05

Landscaper Sprayer (Pesticide Applicator)

Effective Period: 7/1/2019 - 6/30/2020
Wage Rate per Hour: $26.59
Supplemental Benefit Rate per Hour: $16.05

Watering - Plant Maintainer

Effective Period: 7/1/2019 - 6/30/2020
Wage Rate per Hour: $21.40
Supplemental Benefit Rate per Hour: $16.05

Overtime Description

For all overtime work performed, supplemental benefits shall include an additional seventy-five ($0.75) cents per hour.

Overtime

Time and one half the regular rate after an 8 hour day.
Time and one half the regular rate for Saturday.
Double time the regular rate for Sunday.
Time and one half the regular rate for work on a holiday plus the day's pay.

Paid Holidays

New Year's Day
Memorial Day
Independence Day
Labor Day
Thanksgiving Day
Christmas Day

Shift Rates

Work performed on a 4pm to 12am shift has a 15% differential. Work performed on a 12am to 8am shift has a 20% differential.

(Local #175)

MARBLE MECHANIC

Marble Setter

Effective Period: 7/1/2019 - 6/30/2020
Wage Rate per Hour: $54.44
Supplemental Benefit Rate per Hour: $40.77

Marble Finisher

Effective Period: 7/1/2019 - 6/30/2020
Wage Rate per Hour: $42.86
Supplemental Benefit Rate per Hour: $38.22

Marble Polisher

Effective Period: 7/1/2019 - 6/30/2020
Wage Rate per Hour: $39.81
Supplemental Benefit Rate per Hour: $30.35

Marble Maintenance Finisher

Effective Period: 7/1/2019 - 6/30/2020
Wage Rate per Hour: $24.31
Supplemental Benefit Rate per Hour: $13.34

Overtime Description
Supplemental Benefit contributions are to be made at the applicable overtime rates. Time and one half the regular rate after a 7 hour day or time and one half the regular rate after an 8 hour day - chosen by Employer at the start of the project and then would last for the full duration of the project.

Overtime
Time and one half the regular rate for Saturday.
Double time the regular rate for Sunday.

Overtime Holidays
Double time the regular rate for work on the following holiday(s).
New Year's Day
President's Day
Good Friday

Memorial Day
Independence Day
Labor Day
Columbus Day
Veteran's Day
Thanksgiving Day
Day after Thanksgiving
Christmas Day

Paid Holidays
None

(Local #7)

MASON TENDER

Mason Tender

Effective Period: 7/1/2019 - 6/30/2020
Wage Rate per Hour: $38.40
Supplemental Benefit Rate per Hour: $31.04

Overtime
Time and one half the regular rate after an 8 hour day.
Time and one half the regular rate for Saturday.
Double time the regular rate for Sunday.
Saturday may be used as a make-up day at straight time when a day is lost during that week to inclement weather.

Overtime Holidays
Double time the regular rate for work on the following holiday(s).
New Year's Day
President's Day
Memorial Day
Independence Day
Labor Day
Thanksgiving Day
Christmas Day

Paid Holidays
None

Shift Rates
The employer may work two (2) shifts with the first shift at the straight time wage rate and the second shift receiving eight (8) hours paid for seven (7) hours work at the straight time wage rate. When it is not possible to conduct alteration work during regular working hours in a building occupied by tenants, the rule for the second shift will apply.

(Local #79)

MASON TENDER (INTERIOR DEMOLITION WORKER)

Mason Tender Tier A

Tier A Interior Demolition Worker performs all burning, chopping, and other technically skilled tasks related to interior demolition work.

Effective Period: 7/1/2019 - 6/30/2020
Wage Rate per Hour: $36.44
Supplemental Benefit Rate per Hour: $24.50

Mason Tender Tier B

Tier B Interior Demolition Worker performs manual work and work incidental to demolition work, such as loading and carting of debris from the work site to an area where it can be loaded in to bins/trucks for removal. Also performs clean-up of the site when demolition is completed.

Effective Period: 7/1/2019 - 6/30/2020
Wage Rate per Hour: $25.63
Supplemental Benefit Rate per Hour: $18.82

Overtime
Time and one half the regular rate after an 8 hour day.
Time and one half the regular rate for Sunday.

Overtime Holidays
Double time the regular rate for work on the following holiday(s).
New Year's Day
President's Day
Memorial Day
Independence Day
Labor Day
Thanksgiving Day
Christmas Day

Paid Holidays
None

(Local #79)

METALLIC LATHER

Metallic Lather

Effective Period: 7/1/2019 - 6/30/2020
Wage Rate per Hour: $46.23
Supplemental Benefit Rate per Hour: $46.67
Supplemental Note: Overtime Supplemental Benefit rate - $57.92

Overtime Description
Overtime would be time and one half the regular rate after a seven (7) or eight (8) hours workday, which would be set at the start of the job.

Overtime
Time and one half the regular rate for Saturday.
Double time the regular rate for Sunday.

Overtime Holidays
Double time the regular rate for work on the following holiday(s).
New Year's Day
Washington's Birthday
Memorial Day
Independence Day
Labor Day
Columbus Day
Thanksgiving Day
Christmas Day

Paid Holidays
1/2 day on Christmas Eve if work is performed in the A.M.
1/2 day on New Year's Eve if work is performed in the A.M.

Shift Rates
There will be no shift differential paid on the first shift if more than one shift is employed. The shift differential will remain $12/hour on the second and third shift for the first eight (8) hours if worked. There will be no pyramiding on overtime worked on second and third shifts. The time and one half (1.5x) rate will be against the base wage rate, not the shift differential

(Local #46)

MILLWRIGHT

Millwright

Effective Period: 7/1/2019 - 6/30/2020

Wage Rate per Hour: $54.20
Supplemental Benefit Rate per Hour: $53.81

Overtime
Time and one half the regular rate after an 8 hour day.
Time and one half the regular rate for Saturday.
Double time the regular rate for Sunday.
Saturday may be used as a make-up day at straight time when a day is lost during that week to inclement weather.

Overtime Holidays
Double time the regular rate for work on the following holiday(s).
New Year's Day
President's Day
Good Friday
Memorial Day
Independence Day
Labor Day
Columbus Day
Presidential Election Day
Thanksgiving Day
Christmas Day

Paid Holidays
1/2 day on Christmas Eve if work is performed in the A.M.
1/2 day on New Year's Eve if work is performed in the A.M.

Shift Rates
The first shift shall receive the straight time rate of pay. The second shift receives the straight time rate of pay plus fifteen (15%) per cent. Members of the second shift shall be allowed one half hour to eat, with this time being included in the hours of the workday established. There must be a first shift to work a second shift. All additional hours worked shall be paid at the time and one-half rate of pay plus fifteen (15%) per cent for weekday hours.

(Local #740)

MOSAIC MECHANIC

Mosaic Mechanic - Mosaic & Terrazzo Mechanic

Effective Period: 7/1/2019 - 6/30/2020
Wage Rate per Hour: $49.91
Supplemental Benefit Rate per Hour: $43.24

Mosaic Mechanic - Mosaic & Terrazzo Finisher

Effective Period: 7/1/2019 - 6/30/2020
Wage Rate per Hour: $48.31
Supplemental Benefit Rate per Hour: $43.24

Mosaic Mechanic - Machine Operator Grinder

Effective Period: 7/1/2019 - 6/30/2020
Wage Rate per Hour: $48.31
Supplemental Benefit Rate per Hour: $43.24

Overtime
Time and one half the regular rate after a 7 hour day.
Time and one half the regular rate for Saturday.
Double time the regular rate for Sunday.

Overtime Holidays
Double time the regular rate for work on the following holiday(s).
New Year's Day
Washington's Birthday
Good Friday
Independence Day
Labor Day
Columbus Day
Veteran's Day
Thanksgiving Day
Day after Thanksgiving
Christmas Day

Paid Holidays
None

(Local #7)

PAINTER

Painter - Brush & Roller

Effective Period: 7/1/2019 - 6/30/2020
Wage Rate per Hour: $43.00
Supplemental Benefit Rate per Hour: $32.49
Supplemental Note: $ 37.75 on overtime

Spray & Scaffold / Decorative / Sandblast

Effective Period: 7/1/2019 - 6/30/2020
Wage Rate per Hour: $46.00

Supplemental Benefit Rate per Hour: $32.49
Supplemental Note: $ 37.75 on overtime

Overtime
Time and one half the regular rate after a 7 hour day.
Time and one half the regular rate for Saturday.
Time and one half the regular rate for Sunday.

Overtime Holidays
Time and one half the regular rate for work on the following holiday(s).
New Year's Day
President's Day
Memorial Day
Independence Day
Labor Day
Columbus Day
Thanksgiving Day
Christmas Day

Paid Holidays
None

(District Council of Painters #9)

PAINTER - LINE STRIPING (ROADWAY)

Striping - Machine Operator

Effective Period: 7/1/2019 - 6/30/2020
Wage Rate per Hour: $35.00
Supplemental Benefit Rate per Hour: $12.37
Supplemental Note: Overtime Supplemental Benefit rate - $8.02; New Hire Rate (0-3 months) - $0.00

Lineperson (Thermoplastic)

Effective Period: 7/1/2019 - 6/30/2020
Wage Rate per Hour: $39.00
Supplemental Benefit Rate per Hour: $12.37
Supplemental Note: Overtime Supplemental Benefit rate - $8.02; New Hire Rate (0-3 months) - $0.00

Overtime Description
For Paid Holidays: Employees will only receive Holiday Pay for holidays not worked if said employee worked both the weekday before and the weekday after the holiday.

Overtime
Time and one half the regular rate after an 8 hour day.

Time and one half the regular rate for Saturday.
Time and one half the regular rate for Sunday.
Time and one half the regular rate for work on the following holiday(s).

Paid Holidays

New Year's Day
Good Friday
Memorial Day
Independence Day
Labor Day
Columbus Day
Presidential Election Day
Thanksgiving Day
Day after Thanksgiving
Christmas Day

Shift Rates

Four (4), ten (10) hour days may be worked at straight time during a week, Monday thru Thursday.
Friday may be used as a make-up day.

Vacation

Employees with one to two years service shall accrue vacation based on hours worked: 250 hours worked - 1 day vacation; 500 hours worked - 2 days vacation; 750 hours worked - 3 days vacation; 900 hours worked - 4 days vacation; 1,000 hours worked - 5 days vacation. Employees with two to five years service receive two weeks vacation. Employees with five to twenty years service receive three weeks vacation. Employees with twenty to twenty-five years service receive four weeks vacation. Employees with 25 or more years service receive five weeks vacation. Vacation must be taken during winter months.

(Local #1010)

PAINTER - METAL POLISHER

METAL POLISHER

Effective Period: 7/1/2019 - 6/30/2020
Wage Rate per Hour: $30.58
Supplemental Benefit Rate per Hour: $7.16

METAL POLISHER - NEW CONSTRUCTION

Effective Period: 7/1/2019 - 6/30/2020
Wage Rate per Hour: $31.53
Supplemental Benefit Rate per Hour: $7.16

METAL POLISHER - SCAFFOLD OVER 34 FEET

Effective Period: 7/1/2019 - 6/30/2020

Wage Rate per Hour: $34.08
Supplemental Benefit Rate per Hour: $7.16

Overtime Description
All work performed on Saturdays shall be paid at time-in-a half. The exception being; for suspended scaffold work and work deemed as a construction project; an eight (8) hour shift lost during the week due to circumstances beyond the control of the employer, up to a maximum of eight (8) hours per week, may be worked on Saturday at the straight time rate.

Overtime
Time and one half the regular rate after an 8 hour day.
Time and one half the regular rate for Saturday.
Double time the regular rate for Sunday.
Saturday may be used as a make-up day at straight time when a day is lost during that week to inclement weather.
Triple time the regular rate for work on the following holiday(s).

Paid Holidays
New Year's Day
Martin Luther King Jr. Day
President's Day
Memorial Day
Independence Day
Labor Day
Columbus Day
Veteran's Day
Thanksgiving Day
Day after Thanksgiving
Christmas Day

Shift Rates
Four Days a week at Ten (10) hours straight a day.

Local 8A-28A

PAINTER - SIGN

Sign Painter

Effective Period: 7/1/2019 - 6/30/2020
Wage Rate per Hour: $41.98
Supplemental Benefit Rate per Hour: $20.10

Assistant Sign Painter

Effective Period: 7/1/2019 - 6/30/2020

Wage Rate per Hour: $35.67
Supplemental Benefit Rate per Hour: $18.47

Overtime
Time and one half the regular rate after an 8 hour day.
Time and one half the regular rate for Saturday.
Time and one half the regular rate for Sunday.
Double time the regular rate for work on the following holiday(s).

Paid Holidays
New Year's Day
President's Day
Memorial Day
Independence Day
Labor Day
Columbus Day
Election Day
Thanksgiving Day
Day after Thanksgiving
Christmas Day

Vacation
At least 1 year of employment.....1 week
2 years or more of employment.....2 weeks
8 years or more of employment.....3 weeks

(Local #8A-28A)

PAINTER - STRUCTURAL STEEL

Painters on Structural Steel

Effective Period: 7/1/2019 - 6/30/2020
Wage Rate per Hour: $49.50
Supplemental Benefit Rate per Hour: $41.83

Painter - Power Tool

Effective Period: 7/1/2019 - 6/30/2020
Wage Rate per Hour: $55.50
Supplemental Benefit Rate per Hour: $41.83
Overtime Wage Rate: $6.00 above the "Painters on Structural Steel" overtime rate.

Overtime Description
Supplemental Benefits shall be paid for each hour worked, up to forty (40) hours per week for the period of May 1st to November 15th or up to fifty (50) hours per week for the period of November 16th to April 30th.

Overtime
Time and one half the regular rate after a 7 hour day.
Time and one half the regular rate for Saturday.
Time and one half the regular rate for Sunday.

Overtime Holidays
Double time the regular rate for work on the following holiday(s).
New Year's Day
Memorial Day
Independence Day
Labor Day
Thanksgiving Day
Christmas Day

Paid Holidays
None

Shift Rates
Regular hourly rates plus a ten per cent (10%) differential

(Local #806)

PAPERHANGER

Paperhanger

Effective Period: 7/1/2019 - 6/30/2020
Wage Rate per Hour: $45.40
Supplemental Benefit Rate per Hour: $34.74
Supplemental Note: Supplemental benefits are to be paid at the appropriate straight time and overtime rate.

Overtime
Time and one half the regular rate after a 7 hour day.
Time and one half the regular rate for Saturday.
Time and one half the regular rate for Sunday.

Overtime Holidays
Time and one half the regular rate for work on the following holiday(s).
New Year's Day
President's Day
Memorial Day
Independence Day
Labor Day
Thanksgiving Day
Day after Thanksgiving
Christmas Day

Paid Holidays
None

Shift Rates
Evening shift - 4:30 P.M. to 12:00 Midnight (regular rate of pay); any work performed before 7:00 A.M. shall be at time and one half the regular base rate of pay.

(District Council of Painters #9)

PAVER AND ROADBUILDER

Paver & Roadbuilder - Formsetter

Effective Period: 7/1/2019 - 6/30/2020
Wage Rate per Hour: $46.85
Supplemental Benefit Rate per Hour: $44.86
Supplemental Note: For time and one half overtime - $48.74 For double overtime - $52.61

Paver & Roadbuilder - Laborer

Paving and road construction work, regardless of material used, including but not limited to preparation of job sites, removal of old surfaces, asphalt and/or concrete, by whatever method, including but not limited to milling; laying of concrete; laying of asphalt for temporary, patchwork, and utility paving (but not production paving); site preparation and incidental work for installation of rubberized materials and similar surfaces; installation and repair of temporary construction fencing; slurry/seal coating, paving stones, maintenance of safety surfaces; play equipment installation, and other related work.

Effective Period: 7/1/2019 - 6/30/2020
Wage Rate per Hour: $42.98
Supplemental Benefit Rate per Hour: $44.86
Supplemental Note: For time and one half overtime - $48.74 For double overtime - $52.61

Production Paver & Roadbuilder - Screed Person

(Production paving is asphalt paving when using a paving machine or on a project where a paving machine is traditionally used)

Adjustment of paving machinery on production paving jobs.

Effective Period: 7/1/2019 - 6/30/2020
Wage Rate per Hour: $47.45
Supplemental Benefit Rate per Hour: $44.86
Supplemental Note: For time and one half overtime - $48.74 For double overtime - $52.61

Production Paver & Roadbuilder - Raker

Effective Period: 7/1/2019 - 6/30/2020
Wage Rate per Hour: $46.85
Supplemental Benefit Rate per Hour: $44.86
Supplemental Note: For time and one half overtime - $48.74 For double overtime - $52.61

Production Paver & Roadbuilder - Shoveler

General laborer (except removal of surfaces - see Paver and Roadbuilder-Laborer) including but not limited to tamper, AC paint and liquid tar work.

Effective Period: 7/1/2019 - 6/30/2020
Wage Rate per Hour: $42.98
Supplemental Benefit Rate per Hour: $44.86
Supplemental Note: For time and one half overtime - $48.74 For double overtime - $52.61

Overtime Description
If an employee works New Year's Day or Christmas Day, they receive the single time rate plus 25%.

For Paid Holidays: Holiday pay for all holidays shall be prorated based two hours per day for each day worked in the holiday week, not to exceed 8 hours of holiday pay.

Overtime
Time and one half the regular rate after an 8 hour day.
Time and one half the regular rate for Saturday.
Double time the regular rate for Sunday.

Overtime Holidays
Double time the regular rate for work on the following holiday(s).
Memorial Day
Independence Day
Labor Day
Columbus Day
Thanksgiving Day

Paid Holidays
Memorial Day
Independence Day
Labor Day
Thanksgiving Day

Shift Rates
When two shifts are employed, the work period for each shift shall be a continuous eight (8) hours. When three shifts are employed, each shift will work seven and one half (7 ½) hours but will be paid for eight (8) hours since only one half (1/2) hour is allowed for meal time.
When two or more shifts are employed, single time will be paid for each shift.

Night Work - On night work, the first eight (8) hours of work will be paid for at the single time rate, except that production paving work shall be paid at 10% over the single time rate for the screed person, rakers and shovelers directly involved only. This differential is to be paid when there is only one shift and the shift works at night. All other workers will be exempt. Hours worked over eight (8) hours during said shift shall be paid for at the time and one-half rate.

(Local #1010)

PLASTERER

Plasterer

Effective Period: 7/1/2019 - 6/30/2020
Wage Rate per Hour: $45.93
Supplemental Benefit Rate per Hour: $26.52

Overtime
Time and one half the regular rate after an 8 hour day.
Time and one half the regular rate for Saturday.
Double time the regular rate for Sunday.
Saturday may be used as a make-up day at straight time when a day is lost during that week to inclement weather.

Overtime Holidays
Double time the regular rate for work on the following holiday(s).
New Year's Day
President's Day
Memorial Day
Independence Day
Labor Day
Thanksgiving Day
Christmas Day

Paid Holidays
None

Shift Rates
When it is not possible to conduct work during regular working hours (between 6:30am and 4:30pm), a shift differential shall be paid at the regular hourly rate plus a twelve per cent (12%) per hour differential. Workers on shift work shall be allowed a paid one-half hour meal break.

(Local #262)

PLASTERER - TENDER

Plasterer - Tender

Effective Period: 7/1/2019 - 6/30/2020
Wage Rate per Hour: $38.40
Supplemental Benefit Rate per Hour: $31.04

Overtime
Time and one half the regular rate after an 8 hour day.
Time and one half the regular rate for Saturday.
Double time the regular rate for Sunday.
Saturday may be used as a make-up day at straight time when a day is lost during that week to inclement weather.

Overtime Holidays
Double time the regular rate for work on the following holiday(s).
New Year's Day
Washington's Birthday
Memorial Day
Independence Day
Labor Day
Presidential Election Day
Thanksgiving Day
Christmas Day

Paid Holidays
None

Shift Rates
When work commences outside regular work hours, workers receive an hour additional (differential) wage and supplement payment. Eight hours pay for seven hours work or nine hours pay for eight hours work.

(Mason Tenders District Council)

PLUMBER

Plumber

Effective Period: 7/1/2019 - 6/30/2020
Wage Rate per Hour: $69.00
Supplemental Benefit Rate per Hour: $37.20
Supplemental Note: Supplemental benefit contributions are to be made at the applicable overtime rates.

Plumber - Temporary Services

Temporary Services - When there are no Plumbers on the job site, there may be three shifts designed to cover the entire twenty-four hour period, including weekends if necessary, at the following rate straight time.

Effective Period: 7/1/2019 - 6/30/2020
Wage Rate per Hour: $55.28
Supplemental Benefit Rate per Hour: $29.68

Overtime Description
Double time the regular rate after a 7 hour day - unless for new construction site work where the plumbing contract price is $1.5 million or less, the hours of labor can be 8 hours per day at the employers option. On Alteration jobs when other mechanical trades at the site are working an eighth hour at straight time, then the plumber shall also work an eighth hour at straight time.

Overtime
Double time the regular time rate for Saturday.
Double time the regular rate for Sunday.

Overtime Holidays
Double time the regular rate for work on the following holiday(s).
New Year's Day
President's Day
Memorial Day
Independence Day
Labor Day
Columbus Day
Veteran's Day
Thanksgiving Day
Day after Thanksgiving
Christmas Day

Shift Rates
Shift work, when directly specified in public agency or authority documents where plumbing contract is $8 million or less, will be permitted. 30% shift premium shall be paid for wages and fringe benefits for 4:00 pm and midnight shifts Monday to Friday. 50% shift premium shall be paid for wages and fringe benefits for 4:00 pm and midnight shift work performed on weekends. For shift work on holidays, double time wages and fringe benefits shall be paid.

(Plumbers Local #1)

PLUMBER (MECHNICAL EQUIPMENT AND SERVICE)
(Mechanical Equipment and Service work shall include any repair and/or replacement of the present plumbing system.)

Plumber

Effective Period: 7/1/2019 - 6/30/2020
Wage Rate per Hour: $43.05
Supplemental Benefit Rate per Hour: $17.71

Overtime
Time and one half the regular rate after an 8 hour day.
Time and one half the regular rate for Saturday.
Time and one half the regular rate for Sunday.

Overtime Holidays
Time and one half the regular rate for work on the following holiday(s).
New Year's Day
President's Day
Memorial Day
Independence Day
Thanksgiving Day
Day after Thanksgiving
Christmas Day

Paid Holidays
None

(Plumbers Local # 1)

PLUMBER (RESIDENTIAL RATES FOR 1, 2 AND 3 FAMILY HOME CONSTRUCTION)

Effective Period: 7/1/2019 - 6/30/2020
Wage Rate per Hour: $47.89
Supplemental Benefit Rate per Hour: $26.74

Overtime
Double time the regular rate after an 8 hour day.
Double time the regular time rate for Saturday.
Double time the regular rate for Sunday.

Overtime Holidays
Double time the regular rate for work on the following holiday(s).
New Year's Day
President's Day
Memorial Day
Independence Day
Labor Day
Columbus Day
Veteran's Day
Thanksgiving Day
Day after Thanksgiving
Christmas Day

Paid Holidays
None

Shift Rates
30% shift premium shall be paid for wages and fringe benefits for 4:00 pm and midnight shifts Monday to Friday. 50% shift premium shall be paid for wages and fringe benefits for 4:00 pm and midnight shift work performed on weekends. For shift work on holidays, double time wages and fringe benefits shall be paid.

(Plumbers Local #1)

PLUMBER: PUMP & TANK
Oil Trades (Installation and Maintenance)

Plumber - Pump & Tank

Effective Period: 7/1/2019 - 6/30/2020
Wage Rate per Hour: $67.45
Supplemental Benefit Rate per Hour: $25.26

Overtime
Time and one half the regular rate after an 8 hour day.
Time and one half the regular rate for Saturday.
Time and one half the regular rate for Sunday.

Overtime Holidays
Time and one half the regular rate for work on the following holiday(s).
New Year's Day
President's Day
Memorial Day
Independence Day
Labor Day
Columbus Day
Veteran's Day
Thanksgiving Day
Day after Thanksgiving
Christmas Day

Paid Holidays
None

Shift Rates
All work outside the regular workday (8:00 A.M. to 3:30 P.M.) is to be paid at time and one half the regular hourly rate

(Plumbers Local #1)

POINTER, WATERPROOFER, CAULKER, SANDBLASTER, STEAMBLASTER
(Exterior Building Renovation)

Journeyperson

Effective Period: 7/1/2019 - 6/30/2020
Wage Rate per Hour: $53.42
Supplemental Benefit Rate per Hour: $26.52

Overtime
Time and one half the regular rate after an 8 hour day.
Time and one half the regular rate for Saturday.
Time and one half the regular rate for Sunday.
Saturday may be used as a make-up day at straight time when a day is lost during that week to inclement weather.

Overtime Holidays
Time and one half the regular rate for work on the following holiday(s).
New Year's Day
Martin Luther King Jr. Day
President's Day
Memorial Day
Independence Day
Labor Day
Thanksgiving Day
Christmas Day

Paid Holidays
None

Shift Rates
All work outside the regular work day (an eight hour workday between the hours of 6:00 A.M. and 4:30 P.M.) is to be paid at time and one half the regular rate.

(Bricklayer District Council)

ROOFER

Roofer

Effective Period: 7/1/2019 - 6/30/2020
Wage Rate per Hour: $43.50
Supplemental Benefit Rate per Hour: $33.81

Overtime
Time and one half the regular rate after an 8 hour day.
Time and one half the regular rate for Saturday.
Time and one half the regular rate for Sunday.

Overtime Holidays
Time and one half the regular rate for work on the following holiday(s).
New Year's Day
Memorial Day
Independence Day
Labor Day
Thanksgiving Day
Christmas Day

Paid Holidays
None

Shift Rates
Second shift - Regular hourly rate plus a 10% differential. Third shift - Regular hourly rate plus a 15% differential.

(Local #8)

SHEET METAL WORKER

Sheet Metal Worker

Effective Period: 7/1/2019 - 6/30/2020
Wage Rate per Hour: $50.15
Supplemental Benefit Rate per Hour: $50.55
Supplemental Note: Supplemental benefit contributions are to be made at the applicable overtime rates.

Sheet Metal Worker - Fan Maintenance

(The temporary operation of fans or blowers in new or existing buildings for heating and/or ventilation, and/or air conditioning prior to the completion of the project.)

Effective Period: 7/1/2019 - 6/30/2020
Wage Rate per Hour: $40.12
Supplemental Benefit Rate per Hour: $50.55

Sheet Metal Worker - Duct Cleaner

Effective Period: 7/1/2019 - 6/30/2020
Wage Rate per Hour: $16.08
Supplemental Benefit Rate per Hour: $11.63

Overtime
Time and one half the regular rate after an 8 hour day.
Time and one half the regular rate for Saturday.
Double time the regular rate for Sunday.

Overtime Holidays
Double time the regular rate for work on the following holiday(s).
New Year's Day
Martin Luther King Jr. Day
President's Day
Memorial Day
Independence Day
Labor Day
Columbus Day
Veteran's Day
Thanksgiving Day
Day after Thanksgiving
Christmas Day

Paid Holidays
None

Shift Rates
Work that can only be performed outside regular working hours (eight hours of work between 7:30 A.M. and 3:30 P.M.) - First shift (work between 3:30 P.M. and 11:30 P.M.) - 10% differential above the established hourly rate. Second shift (work between 11:30 P.M. and 7:30 A.M.) - 15% differential above the established hourly rate.

For Fan Maintenance: On all full shifts of fan maintenance work the straight time hourly rate of pay will be paid for each shift, including nights, Saturdays, Sundays, and holidays.

(Local #28

SHEET METAL WORKER - SPECIALTY
(Decking & Siding)

Sheet Metal Specialty Worker

The first worker to perform this work must be paid at the rate of the Sheet Metal Worker. The second and third workers shall be paid the Specialty Worker Rate. The ratio of One Sheet Metal Worker, then Two Specialty Workers shall be utilized thereafter.

Effective Period: 7/1/2019 - 6/30/2020
Wage Rate per Hour: $46.30
Supplemental Benefit Rate per Hour: $25.95
Supplemental Note: Supplemental benefit contributions are to be made at the applicable overtime rates.

Overtime
Time and one half the regular rate after an 8 hour day.
Time and one half the regular rate for Saturday.
Double time the regular rate for Sunday.

Overtime Holidays
Double time the regular rate for work on the following holiday(s).
New Year's Day
Martin Luther King Jr. Day
President's Day
Memorial Day
Independence Day
Labor Day
Columbus Day
Veteran's Day
Thanksgiving Day
Christmas Day

Paid Holidays
None

(Local #28)

SHIPYARD WORKER

Shipyard Mechanic - First Class

Effective Period: 7/1/2019 - 6/30/2020
Wage Rate per Hour: $28.50
Supplemental Benefit Rate per Hour: $3.95

Shipyard Mechanic - Second Class

Effective Period: 7/1/2019 - 6/30/2020
Wage Rate per Hour: $19.07
Supplemental Benefit Rate per Hour: $3.59

Shipyard Laborer - First Class

Effective Period: 7/1/2019 - 6/30/2020
Wage Rate per Hour: $23.40
Supplemental Benefit Rate per Hour: $3.75

Shipyard Laborer - Second Class

Effective Period: 7/1/2019 - 6/30/2020
Wage Rate per Hour: $17.38
Supplemental Benefit Rate per Hour: $3.52

Shipyard Dockhand - First Class

Effective Period: 7/1/2019 - 6/30/2020
Wage Rate per Hour: $21.57
Supplemental Benefit Rate per Hour: $3.68

Shipyard Dockhand - Second Class

Effective Period: 7/1/2019 - 6/30/2020
Wage Rate per Hour: $17.28
Supplemental Benefit Rate per Hour: $3.52

Overtime Description
Work performed on holiday is paid double time the regular hourly wage rate plus holiday pay.

Overtime
Time and one half the regular rate after an 8 hour day.
Time and one half the regular rate for Saturday.
Double time the regular rate for Sunday.
Time and one half the regular hourly rate after 40 hours in any work week.

Paid Holidays
New Year's Day
Martin Luther King Jr. Day
President's Day
Good Friday
Memorial Day
Independence Day
Labor Day
Thanksgiving Day
Day after Thanksgiving
Christmas Day

Based on Survey Data

SIGN ERECTOR
(Sheet Metal, Plastic, Electric, and Neon)

Sign Erector

Effective Period: 7/1/2019 - 6/30/2020
Wage Rate per Hour: $49.35
Supplemental Benefit Rate per Hour: $54.63

Overtime
Time and one half the regular rate after a 7 hour day.
Time and one half the regular rate for Saturday.
Time and one half the regular rate for Sunday.
Time and one half the regular rate for work on the following holiday(s).

Paid Holidays
New Year's Day
President's Day
Memorial Day
Independence Day
Labor Day
Columbus Day
Election Day
Thanksgiving Day
Day after Thanksgiving
Christmas Day

Shift Rates
Time and one half the regular hourly rate is to be paid for all hours worked outside the regular workday either (7:00 A.M. through 2:30 P.M.) or (8:00 A.M. through 3:30 P.M.)

(Local #137)

STEAMFITTER

Steamfitter I

Effective Period: 7/1/2019 - 6/30/2020
Wage Rate per Hour: $57.50
Supplemental Benefit Rate per Hour: $57.29
Supplemental Note: Overtime supplemental benefit rate: $113.84

Steamfitter -Temporary Services

The steamfitters shall not do any other work and shall not be permitted to work more than one shift in a twenty-four hour day. When steamfitters are present during the regular working day, no temporary services steamfitter will be required

Effective Period: 7/1/2019 - 6/30/2020
Wage Rate per Hour: $43.70
Supplemental Benefit Rate per Hour: $46.54

Overtime
Double time the regular rate after a 7 hour day.
Double time the regular time rate for Saturday.
Double time the regular rate for Sunday.

Overtime Holidays
Double time the regular rate for work on the following holiday(s).
New Year's Day
President's Day
Memorial Day
Independence Day
Labor Day
Columbus Day
Veteran's Day
Thanksgiving Day
Day after Thanksgiving
Christmas Day

Paid Holidays
None

Shift Rates
Work performed between 3:30 P.M. and 7:00 A.M. and on Saturdays, Sundays and Holidays shall be at double time the regular hourly rate and paid at the overtime supplemental benefit rate above.

Steamfitter II

For heating, ventilation, air conditioning and mechanical public work contracts with a dollar value not to exceed $30,000,000 and for fire protection/sprinkler public work contracts not to exceed $3,000,000.

Effective Period: 7/1/2019 - 6/30/2020
Wage Rate per Hour: $57.50
Supplemental Benefit Rate per Hour: $57.29
Supplemental Note: Overtime supplemental benefit rate: $113.84

Steamfitter -Temporary Services

The steamfitters shall not do any other work and shall not be permitted to work more than one shift in a twenty-four hour day. When steamfitters are present during the regular working day, no temporary services steamfitter will be required.

Effective Period: 7/1/2019 - 6/30/2020
Wage Rate per Hour: $43.70
Supplemental Benefit Rate per Hour: $46.54

Overtime
Double time the regular rate after an 8 hour day.
Double time the regular time rate for Saturday.
Double time the regular rate for Sunday.

Overtime Holidays
Double time the regular rate for work on the following holiday(s).
New Year's Day
President's Day
Memorial Day
Independence Day
Labor Day
Columbus Day
Veteran's Day
Thanksgiving Day
Day after Thanksgiving
Christmas Day

Paid Holidays
None

Shift Rates
May be performed outside of the regular workday except Saturday, Sunday and Holidays. A shift shall consist of eight working hours. All work performed in excess of eight hours shall be paid at double time. No shift shall commence after 7:00 P.M. on Friday or 7:00 P.M. the day before holidays. All work performed after 12:01 A.M. Saturday or 12:01 A.M. the day before a Holiday will be paid at double time. When shift work is performed the wage rate for regular time worked is a 15% percent premium on wage and 15% percent premium on supplemental benefits.

On Transit Authority projects, where work is performed in the vicinity of tracks all shift work on weekends and holidays may be performed at the regular shift rates.

Local #638

STEAMFITTER - REFRIGERATION AND AIR CONDITIONER
(Maintenance and Installation Service Person)

Refrigeration and Air Conditioner Mechanic

Effective Period: 7/1/2019 - 6/30/2020
Wage Rate per Hour: $42.35
Supplemental Benefit Rate per Hour: $17.46

Refrigeration and Air Conditioner Service Person V

Effective Period: 7/1/2019 - 6/30/2020
Wage Rate per Hour: $34.80
Supplemental Benefit Rate per Hour: $15.59

Refrigeration and Air Conditioner Service Person IV

Effective Period: 7/1/2019 - 6/30/2020
Wage Rate per Hour: $28.83
Supplemental Benefit Rate per Hour: $14.05

Refrigeration and Air Conditioner Service Person III

Filter changing and maintenance thereof, oil and greasing, tower and coil cleaning, scraping and painting, general housekeeping, taking of water samples.

Effective Period: 7/1/2019 - 6/30/2020
Wage Rate per Hour: $24.74
Supplemental Benefit Rate per Hour: $12.91

Refrigeration and Air Conditioner Service Person II

Filter changing and maintenance thereof, oil and greasing, tower and coil cleaning, scraping and painting, general housekeeping, taking of water samples.

Effective Period: 7/1/2019 - 6/30/2020
Wage Rate per Hour: $20.51
Supplemental Benefit Rate per Hour: $11.83

Refrigeration and Air Conditioner Service Person I

Filter changing and maintenance thereof, oil and greasing, tower and coil cleaning, scraping and painting, general housekeeping, taking of water samples.

Effective Period: 7/1/2019 - 6/30/2020
Wage Rate per Hour: $15.01
Supplemental Benefit Rate per Hour: $10.60

Overtime

Time and one half the regular rate after an 8 hour day.
Time and one half the regular rate for Saturday.
Double time the regular rate for Sunday.

Overtime Holidays

Double time the regular rate for work on the following holiday(s).
New Year's Day
Independence Day
Labor Day
Veteran's Day
Thanksgiving Day
Christmas Day

Double time and one half the regular rate for work on the following holiday(s).
Martin Luther King Jr. Day
President's Day
Memorial Day
Columbus Day

Paid Holidays

New Year's Day
Martin Luther King Jr. Day
President's Day
Memorial Day
Independence Day
Labor Day
Columbus Day
Veteran's Day
Thanksgiving Day
Christmas Day

(Local #638B)

STONE MASON - SETTER

Stone Mason - Setter

(Assisted by Derrickperson and Rigger)

Effective Period: 7/1/2019 - 6/30/2020
Wage Rate per Hour: $54.17
Supplemental Benefit Rate per Hour: $42.65

Overtime

Time and one half the regular rate after a 7 hour day.
Time and one half the regular rate for Saturday.
Double time the regular rate for Sunday.

Overtime Holidays

Double time the regular rate for work on the following holiday(s).
New Year's Day

Washington's Birthday
Good Friday
Memorial Day
Independence Day
Labor Day
Thanksgiving Day
Christmas Day

Paid Holidays
1/2 day on Christmas Eve if work is performed in the A.M.

Shift Rates
For all work outside the regular workday (8:00 A.M. to 3:30 P.M. Monday through Friday), the pay shall be straight time plus a ten percent (10%) differential.

(Bricklayers District Council)

TAPER

Drywall Taper

Effective Period: 7/1/2019 - 6/30/2020
Wage Rate per Hour: $47.82
Supplemental Benefit Rate per Hour: $26.81

Overtime
Time and one half the regular rate after a 7 hour day.
Time and one half the regular rate for Saturday.
Time and one half the regular rate for Sunday.

Overtime Holidays
Time and one half the regular rate for work on the following holiday(s).
New Year's Day
Martin Luther King Jr. Day
President's Day
Good Friday
Memorial Day
Independence Day
Labor Day
Columbus Day
Thanksgiving Day
Christmas Day

Paid Holidays
Any worker who reports to work on Christmas Eve or New Year's Eve pursuant to his employer's instruction shall be entitled to three (3) hours afternoon pay without working.

(Local #1974)

TELECOMMUNICATION WORKER

(Install/maintain/repair telecommunications cables carrying data, video, and/or voice except for installation on building construction/alteration/renovation projects.)

Telecommunication Worker

Effective Period: 7/1/2019 - 6/30/2020
Wage Rate per Hour: $44.75
Supplemental Benefit Rate per Hour: $23.15
Supplemental Note: The above rate applies for Manhattan, Bronx, Brooklyn, Queens. $22.84 for Staten Island only.

Overtime

Time and one half the regular rate after an 8 hour day.
Time and one half the regular rate for Saturday.
Time and one half the regular rate for Sunday.

Overtime Holidays

Time and one half the regular rate for work on the following holiday(s).
New Year's Day
Lincoln's Birthday
Washington's Birthday
Memorial Day
Independence Day
Labor Day
Columbus Day
Election Day
Veteran's Day
Thanksgiving Day
Christmas Day

Paid Holidays

New Year's Day
Lincoln's Birthday
Washington's Birthday
Memorial Day
Independence Day
Labor Day
Columbus Day
Election Day
Veteran's Day
Thanksgiving Day
Christmas Day

Employees have the option of observing either Martin Luther King's Birthday or the day after Thanksgiving instead of Lincoln's Birthday

Shift Rates
For any workday that starts before 8A.M. or ends after 6P.M. there is a 10% differential for the applicable worker's hourly rate.

Vacation
After 6 months.....one week.
After 12 months but less than 7 years.....two weeks.
After 7 or more but less than 15 years.....three weeks.
After 15 years or more but less than 25 years.....four weeks.

(C.W.A.)

TILE FINISHER

Tile Finisher

Effective Period: 7/1/2019 - 6/30/2020
Wage Rate per Hour: $42.72
Supplemental Benefit Rate per Hour: $33.57

Overtime
Time and one half the regular rate after a 7 hour day.
Time and one half the regular rate for Saturday.
Double time the regular rate for Sunday.

Overtime Holidays
Double time the regular rate for work on the following holiday(s).
New Year's Day
President's Day
Good Friday
Memorial Day
Independence Day
Labor Day
Columbus Day
Veteran's Day
Thanksgiving Day
Day after Thanksgiving
Christmas Day

Paid Holidays
None

Shift Rates

Off shift work day (work performed outside the regular 8:00 A.M. to 3:30 P.M. workday): shift differential of one and one quarter (1¼) times the regular straight time rate of pay for the seven hours of actual off-shift work.

(Local #7)

TILE LAYER - SETTER

Tile Layer - Setter

Effective Period: 7/1/2019 - 6/30/2020
Wage Rate per Hour: $54.84
Supplemental Benefit Rate per Hour: $38.32

Overtime
Time and one half the regular rate after a 7 hour day.
Time and one half the regular rate for Saturday.
Double time the regular rate for Sunday.

Overtime Holidays
Double time the regular rate for work on the following holiday(s).
New Year's Day
President's Day
Good Friday
Memorial Day
Independence Day
Labor Day
Columbus Day
Veteran's Day
Thanksgiving Day
Day after Thanksgiving
Christmas Day

Shift Rates
Off shift work day (work performed outside the regular 8:00 A.M. to 3:30 P.M. workday): shift differential of one and one quarter (1¼) times the regular straight time rate of pay for the seven hours of actual off-shift work.

(Local #7)

TIMBERPERSON

Timberperson

Effective Period: 7/1/2019 - 6/30/2020
Wage Rate per Hour: $50.05
Supplemental Benefit Rate per Hour: $51.03

Overtime
Time and one half the regular rate after an 8 hour day.
Time and one half the regular rate for Saturday.
Double time the regular rate for Sunday.
Saturday may be used as a make-up day at straight time when a day is lost during that week to inclement weather.
Time and one half the regular hourly rate after 40 hours in any work week.

Overtime Holidays
Double time the regular rate for work on the following holiday(s).
New Year's Day
President's Day
Memorial Day
Independence Day
Labor Day
Columbus Day
Presidential Election Day
Thanksgiving Day
Christmas Day

Paid Holidays
None

Shift Rates
Off shift work commencing between 5:00 P.M. and 11:00 P.M. shall work eight and one half hours allowing for one half hour for lunch. The wage rate shall be 113% of the straight time hourly wage rate.

(Local #1536)

TUNNEL WORKER

Blasters, Mucking Machine Operators (Compressed Air Rates)

Effective Period: 7/1/2019 - 6/30/2020
Wage Rate per Hour: $65.42
Supplemental Benefit Rate per Hour: $56.42

Tunnel Workers (Compressed Air Rates)

Includes shield driven liner plate portions or solidification portions work (8 hour shift) during excavation phase.

Effective Period: 7/1/2019 - 6/30/2020

Wage Rate per Hour: **$63.21**
Supplemental Benefit Rate per Hour: **$54.60**

Top Nipper (Compressed Air Rates)

Effective Period: 7/1/2019 - 6/30/2020
Wage Rate per Hour: **$62.02**
Supplemental Benefit Rate per Hour: **$53.57**

Outside Lock Tender, Outside Gauge Tender,Muck Lock Tender (Compressed Air Rates)

Effective Period: 7/1/2019 - 6/30/2020
Wage Rate per Hour: **$60.84**
Supplemental Benefit Rate per Hour: **$52.63**

Bottom Bell & Top Bell Signal Person: Shaft Person (Compressed Air Rates)

Effective Period: 7/1/2019 - 6/30/2020
Wage Rate per Hour: **$60.84**
Supplemental Benefit Rate per Hour: **$52.63**

Changehouse Attendant: Powder Watchperson (Compressed Air Rates)

Effective Period: 7/1/2019 - 6/30/2020
Wage Rate per Hour: **$53.40**
Supplemental Benefit Rate per Hour: **$49.60**

Blasters (Free Air Rates)

Effective Period: 7/1/2019 - 6/30/2020
Wage Rate per Hour: **$62.41**
Supplemental Benefit Rate per Hour: **$54.17**

Tunnel Workers (Free Air Rates)

Effective Period: 7/1/2019 - 6/30/2020
Wage Rate per Hour: **$59.72**
Supplemental Benefit Rate per Hour: **$51.89**

All Others (Free Air Rates)

Effective Period: 7/1/2019 - 6/30/2020
Wage Rate per Hour: **$55.18**
Supplemental Benefit Rate per Hour: **$48.03**

Microtunneling (Free Air Rates)

Effective Period: 7/1/2019 - 6/30/2020
Wage Rate per Hour: $47.78
Supplemental Benefit Rate per Hour: $41.51

Overtime Description

For work performed during excavation and primary concrete tunnel lining phases - Double time the regular rate after an 8 hour day and Saturday, Sunday and on the following holiday(s) listed below.
For Repair-Maintenance Work on Existing Equipment and Facilities - Time and one half the regular rate after a 7 hour day, Saturday, Sunday and double time the regular rate for work on the following holiday(s) listed below.
For Small-Bore Micro Tunneling Machines - Time and one-half the regular rate shall be paid for all overtime.
For work not listed above - Time and one half the regular rate after an 8 hour day and Saturday and double time the regular rate on Sunday and on the following holiday(s) listed below.

Paid Holidays

New Year's Day
Lincoln's Birthday
President's Day
Memorial Day
Independence Day
Labor Day
Columbus Day
Election Day
Veteran's Day
Thanksgiving Day
Christmas Day

(Local #147)

UTILITY LOCATOR
(Locate & mark underground utilities for street excavation.)

Utility Locator (Year 7 and above)

Effective Period: 7/1/2019 - 6/30/2020
Wage Rate per Hour: $31.56
Supplemental Benefit Rate per Hour: $1.93

Utility Locator (Year 5 - 6)

Effective Period: 7/1/2019 - 6/30/2020
Wage Rate per Hour: $22.85
Supplemental Benefit Rate per Hour: $1.93

Utility Locator (Year 4)

Effective Period: 7/1/2019 - 6/30/2020
Wage Rate per Hour: $21.54
Supplemental Benefit Rate per Hour: $1.93

Utility Locator (Year 3)

Effective Period: 7/1/2019 - 6/30/2020
Wage Rate per Hour: $20.30
Supplemental Benefit Rate per Hour: $1.93

Utility Locator (Year 2)

Effective Period: 7/1/2019 - 6/30/2020
Wage Rate per Hour: $19.13
Supplemental Benefit Rate per Hour: $1.93

Utility Locator (Year 1)

Effective Period: 7/1/2019 - 6/30/2020
Wage Rate per Hour: $18.04
Supplemental Benefit Rate per Hour: $1.93

Utility Locator (Up to 1 year)

Effective Period: 7/1/2019 - 6/30/2020
Wage Rate per Hour: $17.00
Supplemental Benefit Rate per Hour: $1.93
Supplemental Note: No benefits for the first 90 days of employment.

Overtime
Time and one half the regular rate for work on the following Paid Holiday(s).
Time and one half the regular hourly rate after 40 hours in any work week.

Paid Holidays
New Year's Day
Memorial Day
Independence Day
Thanksgiving Day
Christmas Day

Shift Rates
10% shift differential to employees working any shift starting between noon and 5 AM.

Vacation
For up to 1 year ..... 0 hours
For year 1 - 2 ..... 48 hours per year
For year 3 - 9 ..... 96 hours per year
For year 10 or more ..... 144 hours per year

Sick Days:
For up to 1 year employee receives 40 hours paid sick leave.
For year 1 employee earns 2 hours of paid sick leave for every 100 overtime hours worked.
For year 2 - 9 years employee earns 4 hours of paid sick leave for every 100 overtime hours worked.
For year 10 or more employee earns 6 hours of paid sick leave for every 100 overtime hours worked.

(C.W.A.)

WELDER
TO BE PAID AT THE RATE OF THE JOURNEYPERSON IN THE TRADE PERFORMING THE WORK.

OFFICE OF THE COMPTROLLER

CITY OF NEW YORK

CONSTRUCTION APPRENTICE PREVAILING WAGE SCHEDULE

Pursuant to Labor Law § 220 (3-e), only apprentices who are individually registered in a bona fide program to which the employer contractor is a participant and registered with the New York State Department of Labor, may be paid at the apprentice rates in this schedule. Apprentices who are not so registered must be paid as journey persons in accordance with the trade classification of the work they actually performed.

Apprentice ratios are established to ensure the proper safety, training and supervision of apprentices. A ratio establishes the number of journey workers required for each apprentice in a program and on a job site. Ratios are interpreted as follows: in the case of a 1:1, 1:4 ratio, there must be one journey worker for the first apprentice, and four additional journey workers for each subsequent apprentice.

TABLE OF CONTENTS

CLASSIFICATION	PAGE
BOILERMAKER	3
BRICKLAYER	4
CARPENTER	5
CARPENTER - HIGH RISE CONCRETE FORMS	5
CEMENT MASON	6
CEMENT AND CONCRETE WORKER	7
DERRICKPERSON & RIGGER (STONE)	7
DOCKBUILDER/PILE DRIVER	8
ELECTRICIAN	9
ELEVATOR CONSTRUCTOR	11
ELEVATOR REPAIR & MAINTENANCE	12
ENGINEER	13
ENGINEER - OPERATING	13
FLOOR COVERER	14
GLAZIER	15
HAZARDOUS MATERIAL HANDLER	15
HEAT & FROST INSULATOR	16
HOUSE WRECKER	16
IRON WORKER - ORNAMENTAL	17
IRON WORKER - STRUCTURAL	18
LABORER (FOUNDATION, CONCRETE, EXCAVATING, STREET PIPE LAYER & COMMON)	19
MARBLE MECHANICS	19
MASON TENDER	21
METALLIC LATHER	22
MILLWRIGHT	22
PAINTER	23
PAINTER - METAL POLISHER	24
PAINTER - STRUCTURAL STEEL	25
PAVER AND ROADBUILDER	25
PLASTERER	26
PLASTERER - TENDER	26
PLUMBER	27
POINTER, WATERPROOFER, CAULKER, SANDBLASTER, STEAMBLASTER	28
ROOFER	29
SHEET METAL WORKER	30
SIGN ERECTOR	31
STEAMFITTER	32
STONE MASON - SETTER	33
TAPER	34
TILE LAYER - SETTER	34
TIMBERPERSON	35

BOILERMAKER
(Ratio of Apprentice to Journeyperson: 1 to 1, 1 to 3)

Boilermaker (First Year)

Effective Period: 7/1/2019 - 6/30/2020
Wage Rate Per Hour: 65% of Journeyperson's rate
Supplemental Benefit Rate Per Hour: $31.76

Boilermaker (Second Year: 1st Six Months)

Effective Period: 7/1/2019 - 6/30/2020
Wage Rate Per Hour: 70% of Journeyperson's rate
Supplemental Benefit Rate Per Hour: $33.59

Boilermaker (Second Year: 2nd Six Months)

Effective Period: 7/1/2019 - 6/30/2020
Wage Rate Per Hour: 75% of Journeyperson's rate
Supplemental Benefit Rate Per Hour: $35.43

Boilermaker (Third Year: 1st Six Months)

Effective Period: 7/1/2019 - 6/30/2020
Wage Rate Per Hour: 80% of Journeyperson's rate
Supplemental Benefit Rate Per Hour: $37.25

Boilermaker (Third Year: 2nd Six Months)

Effective Period: 7/1/2019 - 6/30/2020
Wage Rate Per Hour: 85% of Journeyperson's rate
Supplemental Benefit Rate Per Hour: $39.08

Boilermaker (Fourth Year: 1st Six Months)

Effective Period: 7/1/2019 - 6/30/2020
Wage Rate Per Hour: 90% of Journeyperson's rate
Supplemental Benefit Rate Per Hour: $40.93

Boilermaker (Fourth Year: 2nd Six Months)

Effective Period: 7/1/2019 - 6/30/2020
Wage Rate Per Hour: 95% of Journeyperson's rate
Supplemental Benefit Rate Per Hour: $42.75

(Local #5)

BRICKLAYER
(Ratio of Apprentice to Journeyperson: 1 to 1, 1 to 4)

Bricklayer (First 750 Hours)

Effective Period: 7/1/2019 - 6/30/2020
Wage Rate Per Hour: 50% of Journeyperson's rate
Supplemental Benefit Rate Per Hour: $20.61

Bricklayer (Second 750 Hours)

Effective Period: 7/1/2019 - 6/30/2020
Wage Rate Per Hour: 60% of Journeyperson's rate
Supplemental Benefit Rate Per Hour: $20.61

Bricklayer (Third 750 Hours)

Effective Period: 7/1/2019 - 6/30/2020
Wage Rate Per Hour: 70% of Journeyperson's rate
Supplemental Benefit Rate Per Hour: $20.61

Bricklayer (Fourth 750 Hours)

Effective Period: 7/1/2019 - 6/30/2020
Wage Rate Per Hour: 80% of Journeyperson's rate
Supplemental Benefit Rate Per Hour: $20.61

Bricklayer (Fifth 750 Hours)

Effective Period: 7/1/2019 - 6/30/2020
Wage Rate Per Hour: 90% of Journeyperson's rate
Supplemental Benefit Rate Per Hour: $20.61

Bricklayer (Sixth 750 Hours)

Effective Period: 7/1/2019 - 6/30/2020
Wage Rate Per Hour: 95% of Journeyperson's rate
Supplemental Benefit Rate Per Hour: $20.61

(Bricklayer District Council)

CARPENTER
(Ratio of Apprentice to Journeyperson: 1 to 1, 1 to 4)

Carpenter (First Year)

Effective Period: 7/1/2019 - 6/30/2020
Wage Rate Per Hour: 40% of Journeyperson's rate
Supplemental Benefit Rate Per Hour For Building Apprentice: $31.44
Supplemental Benefit Rate Per Hour For Heavy Apprentice: $33.49

Carpenter (Second Year)

Effective Period: 7/1/2019 - 6/30/2020
Wage Rate Per Hour: 50% of Journeyperson's rate
Supplemental Benefit Rate Per Hour For Building Apprentice: $31.44
Supplemental Benefit Rate Per Hour For Heavy Apprentice: $33.49

Carpenter (Third Year)

Effective Period: 7/1/2019 - 6/30/2020
Wage Rate Per Hour: 65% of Journeyperson's rate
Supplemental Benefit Rate Per Hour For Building Apprentice: $31.44
Supplemental Benefit Rate Per Hour For Heavy Apprentice: $33.49

Carpenter (Fourth Year)

Effective Period: 7/1/2019 - 6/30/2020
Wage Rate Per Hour: 80% of Journeyperson's rate
Supplemental Benefit Rate Per Hour For Building Apprentice: $31.44
Supplemental Benefit Rate Per Hour For Heavy Apprentice: $33.49

(Carpenters District Council)

CARPENTER - HIGH RISE CONCRETE FORMS
(Ratio of Apprentice to Journeyperson: 1 to 1, 2 to 5)

Carpenter - High Rise (First Year)

Effective Period: 7/1/2019 - 6/30/2020
Wage Rate per Hour: $17.52
Supplemental Benefit Rate per Hour: $16.30

Carpenter - High Rise (Second Year)

Effective Period: 7/1/2019 - 6/30/2020
Wage Rate per Hour: $23.95
Supplemental Benefit Rate per Hour: $16.43

Carpenter - High Rise (Third Year)

Effective Period: 7/1/2019 - 6/30/2020
Wage Rate per Hour: $30.53
Supplemental Benefit Rate per Hour: $16.56

Carpenter - High Rise (Fourth Year)

Effective Period: 7/1/2019 - 6/30/2020
Wage Rate per Hour: $38.15
Supplemental Benefit Rate per Hour: $16.71

(Carpenters District Council)

CEMENT MASON
(Ratio of Apprentice to Journeyperson: 1 to 1, 1 to 4)

Cement Mason (First Year)

Effective Period: 7/1/2019 - 6/30/2020
Wage and Supplemental Rate Per Hour: 50% of Journeyperson's Rate

Cement Mason (Second Year)

Effective Period: 7/1/2019 - 6/30/2020
Wage and Supplemental Rate Per Hour: 60% of Journeyperson's Rate

Cement Mason (Third Year)

Effective Period: 7/1/2019 - 6/30/2020
Wage and Supplemental Rate Per Hour: 70% of Journeyperson's Rate

(Local #780)

CEMENT AND CONCRETE WORKER
(Ratio of Apprentice to Journeyperson: 1 to 1, 1 to 3)

Cement & Concrete Worker (First 1333 hours)

Effective Period: 7/1/2019 - 6/30/2020
Wage Rate Per Hour: 50% of Journeyperson's rate
Supplemental Benefit Rate Per Hour: $20.00

Cement & Concrete Worker (Second 1333 hours)

Effective Period: 7/1/2019 - 6/30/2020
Wage Rate Per Hour: 65% of Journeyperson's rate
Supplemental Benefit Rate Per Hour: $25.45

Cement & Concrete Worker (Last 1334 hours)

Effective Period: 7/1/2019 - 6/30/2020
Wage Rate Per Hour: 80% of Journeyperson's rate
Supplemental Benefit Rate Per Hour: $26.95

Cement & Concrete Worker (Hired after 2/6/2016 - First 1334 hours)

Effective Period: 7/1/2019 - 6/30/2020
Wage Rate Per Hour: 53% of Journeyperson's rate
Supplemental Benefit Rate Per Hour: $14.04

Cement & Concrete Worker (Hired after 2/6/2016 - Second 1334 hours)

Effective Period: 7/1/2019 - 6/30/2020
Wage Rate Per Hour: 69% of Journeyperson's rate
Supplemental Benefit Rate Per Hour: $18.97

Cement & Concrete Worker (Hired after 2/6/2016 - Last 1334 hours)

Effective Period: 7/1/2019 - 6/30/2020
Wage Rate Per Hour: 85% of Journeyperson's rate
Supplemental Benefit Rate Per Hour: $20.05

(Cement Concrete Workers District Council)

DERRICKPERSON & RIGGER (STONE)
(Ratio of Apprentice to Journeyperson: 1 to 1, 1 to 4)

Derrickperson & Rigger (stone) - First Year

Effective Period: 7/1/2019 - 6/30/2020
Wage Rate Per Hour: 50% of Journeyperson's rate
Supplemental Benefit Rate Per Hour: 50% of Journeyperson's rate

Derrickperson & Rigger (stone) - Second Year: 1st Six Months

Effective Period: 7/1/2019 - 6/30/2020
Wage Rate Per Hour: 70% of Journeyperson's rate
Supplemental Benefit Rate Per Hour: 75% of Journeyperson's rate

Derrickperson & Rigger (stone) - Second Year: 2nd Six Months

Effective Period: 7/1/2019 - 6/30/2020
Wage Rate Per Hour: 80% of Journeyperson's rate
Supplemental Benefit Rate Per Hour: 75% of Journeyperson's rate

Derrickperson & Rigger (stone) - Third Year

Effective Period: 7/1/2019 - 6/30/2020
Wage Rate Per Hour: 90% of Journeyperson's rate
Supplemental Benefit Rate Per Hour: 75% of Journeyperson's rate

(Local #197)

DOCKBUILDER/PILE DRIVER
(Ratio of Apprentice to Journeyperson: 1 to 1, 1 to 6)

Dockbuilder/Pile Driver (First Year)

Effective Period: 7/1/2019 - 6/30/2020
Wage Rate Per Hour: 40% of Journeyperson's rate
Supplemental Benefit Rate Per Hour: $34.12

Dockbuilder/Pile Driver (Second Year)

Effective Period: 7/1/2019 - 6/30/2020
Wage Rate Per Hour: 50% of Journeyperson's rate
Supplemental Benefit Rate Per Hour: $34.12

Dockbuilder/Pile Driver (Third Year)

Effective Period: 7/1/2019 - 6/30/2020

Wage Rate Per Hour: 65% of Journeyperson's rate
Supplemental Benefit Rate Per Hour: $34.12

Dockbuilder/Pile Driver (Fourth Year)

Effective Period: 7/1/2019 - 6/30/2020
Wage Rate Per Hour: 80% of Journeyperson's rate
Supplemental Benefit Rate Per Hour: $34.12

(Carpenters District Council)

ELECTRICIAN
(Ratio of Apprentice to Journeyperson: 1 to 1, 1 to 3)

Electrician (First Term: 0-6 Months)

Effective Period: 7/1/2019 - 6/30/2020
Wage Rate per Hour: $15.75
Supplemental Benefit Rate per Hour: $14.03
Overtime Supplemental Rate Per Hour: $15.07

Electrician (First Term: 7-12 Months)

Effective Period: 7/1/2019 - 6/30/2020
Wage Rate per Hour: $16.25
Supplemental Benefit Rate per Hour: $14.28
Overtime Supplemental Rate Per Hour: $15.36

Electrician (Second Term: 0-6 Months)

Effective Period: 7/1/2019 - 6/30/2020
Wage Rate per Hour: $17.25
Supplemental Benefit Rate per Hour: $14.79
Overtime Supplemental Rate Per Hour: $15.94

Electrician (Second Term: 7-12 Months)

Effective Period: 7/1/2019 - 6/30/2020
Wage Rate per Hour: $18.25
Supplemental Benefit Rate per Hour: $15.30
Overtime Supplemental Rate Per Hour: $16.51

Electrician (Third Term: 0-6 Months)

Effective Period: 7/1/2019 - 6/30/2020
Wage Rate per Hour: $19.25
Supplemental Benefit Rate per Hour: $15.81
Overtime Supplemental Rate Per Hour: $17.09

Electrician (Third Term: 7-12 Months)

Effective Period: 7/1/2019 - 6/30/2020
Wage Rate per Hour: $20.25
Supplemental Benefit Rate per Hour: $16.32
Overtime Supplemental Rate Per Hour: $17.67

Electrician (Fourth Term: 0-6 Months)

Effective Period: 7/1/2019 - 6/30/2020
Wage Rate per Hour: $21.25
Supplemental Benefit Rate per Hour: $16.83
Overtime Supplemental Rate Per Hour: $18.24

Electrician (Fourth Term: 7-12 Months)

Effective Period: 7/1/2019 - 6/30/2020
Wage Rate per Hour: $23.25
Supplemental Benefit Rate per Hour: $17.85
Overtime Supplemental Rate Per Hour: $19.39

Electrician (Fifth Term: 0-12 Months)

Effective Period: 7/1/2019 - 6/30/2020
Wage Rate per Hour: $24.50
Supplemental Benefit Rate per Hour: $21.07
Overtime Supplemental Rate Per Hour: $22.62

Electrician (Fifth Term: 13-18 Months)

Effective Period: 7/1/2019 - 6/30/2020
Wage Rate per Hour: $29.00
Supplemental Benefit Rate per Hour: $23.43
Overtime Supplemental Rate Per Hour: $25.26

Overtime Description

Overtime Wage paid at time and one half the regular rate

(Local #3)

ELEVATOR CONSTRUCTOR
(Ratio of Apprentice to Journeyperson: 1 to 1, 1 to 2)

Elevator (Constructor) - First Year

Effective Period: 7/1/2019 - 3/16/2020
Wage Rate Per Hour: 50% of Journeyperson's rate
Supplemental Rate Per Hour: $31.52

Effective Period: 3/17/2020 - 6/30/2020
Wage Rate Per Hour: 50% of Journeyperson's rate
Supplemental Rate Per Hour: $32.14

Elevator (Constructor) - Second Year

Effective Period: 7/1/2019 - 3/16/2020
Wage Rate Per Hour: 55% of Journeyperson's rate
Supplemental Rate Per Hour: $32.03

Effective Period: 3/17/2020 - 6/30/2020
Wage Rate Per Hour: 55% of Journeyperson's rate
Supplemental Rate Per Hour: $32.67

Elevator (Constructor) - Third Year

Effective Period: 7/1/2019 - 3/16/2020
Wage Rate Per Hour: 65% of Journeyperson's rate
Supplemental Rate Per Hour: $33.06

Effective Period: 3/17/2020 - 6/30/2020
Wage Rate Per Hour: 65% of Journeyperson's rate
Supplemental Rate Per Hour: $33.74

Elevator (Constructor) - Fourth Year

Effective Period: 7/1/2019 - 3/16/2020
Wage Rate Per Hour: 75% of Journeyperson's rate
Supplemental Rate Per Hour: $34.08

Effective Period: 3/17/2020 - 6/30/2020
Wage Rate Per Hour: 75% of Journeyperson's rate
Supplemental Rate Per Hour: $34.80

(Local #1)

ELEVATOR REPAIR & MAINTENANCE
(Ratio of Apprentice to Journeyperson: 1 to 1, 1 to 2)

Elevator Service/Modernization Mechanic (First Year)

Effective Period: 7/1/2019 - 3/16/2020
Wage Rate Per Hour: 50% of Journeyperson's rate
Supplemental Benefit Per Hour: $31.47

Effective Period: 3/17/2020 - 6/30/2020
Wage Rate Per Hour: 50% of Journeyperson's rate
Supplemental Benefit Per Hour: $32.09

Elevator Service/Modernization Mechanic (Second Year)

Effective Period: 7/1/2019 - 3/16/2020
Wage Rate Per Hour: 55% of Journeyperson's rate
Supplemental Benefit Per Hour: $31.98

Effective Period: 3/17/2020 - 6/30/2020
Wage Rate Per Hour: 55% of Journeyperson's rate
Supplemental Benefit Per Hour: $32.62

Elevator Service/Modernization Mechanic (Third Year)

Effective Period: 7/1/2019 - 3/16/2020
Wage Rate Per Hour: 65% of Journeyperson's rate
Supplemental Benefit Per Hour: $32.99

Effective Period: 3/17/2020 - 6/30/2020
Wage Rate Per Hour: 65% of Journeyperson's rate
Supplemental Benefit Per Hour: $33.67

Elevator Service/Modernization Mechanic (Fourth Year)

Effective Period: 7/1/2019 - 3/16/2020
Wage Rate Per Hour: 75% of Journeyperson's rate
Supplemental Benefit Per Hour: $34.01

Effective Period: 3/17/2020 - 6/30/2020
Wage Rate Per Hour: 75% of Journeyperson's rate
Supplemental Benefit Per Hour: $34.73

(Local #1)

ENGINEER
(Ratio of Apprentice to Journeyperson: 1 to 1, 1 to 5)

Engineer - First Year

Effective Period: 7/1/2019 - 6/30/2020
Wage Rate per Hour: $25.38
Supplemental Benefit Rate per Hour: $26.69

Engineer - Second Year

Effective Period: 7/1/2019 - 6/30/2020
Wage Rate per Hour: $31.72
Supplemental Benefit Rate per Hour: $26.69

Engineer - Third Year

Effective Period: 7/1/2019 - 6/30/2020
Wage Rate per Hour: $34.89
Supplemental Benefit Rate per Hour: $26.69

Engineer - Fourth Year

Effective Period: 7/1/2019 - 6/30/2020
Wage Rate per Hour: $38.06
Supplemental Benefit Rate per Hour: $26.69

(Local #15)

ENGINEER - OPERATING
(Ratio of Apprentice to Journeyperson: 1 to 1, 1 to 5)

Operating Engineer - First Year

Effective Period: 7/1/2019 - 6/30/2020
Wage Rate Per Hour 40% of Journeyperson's Rate
Supplemental Benefit Per Hour: $22.45

Operating Engineer - Second Year

Effective Period: 7/1/2019 - 6/30/2020
Wage Rate Per Hour: 50% of Journeyperson's Rate

Supplemental Benefit Per Hour: $22.45

Operating Engineer - Third Year

Effective Period: 7/1/2019 - 6/30/2020
Wage Rate Per Hour: 60% of Journeyperson's Rate
Supplemental Benefit Per Hour: $22.45

(Local #14)

FLOOR COVERER
(Ratio of Apprentice to Journeyperson: 1 to 1, 1 to 4)

Floor Coverer (First Year)

Effective Period: 7/1/2019 - 6/30/2020
Wage Rate Per Hour: 40% of Journeyperson's rate
Supplemental Rate Per Hour: $31.24

Floor Coverer (Second Year)

Effective Period: 7/1/2019 - 6/30/2020
Wage Rate Per Hour: 50% of Journeyperson's rate
Supplemental Rate Per Hour: $31.24

Floor Coverer (Third Year)

Effective Period: 7/1/2019 - 6/30/2020
Wage Rate Per Hour: 65% of Journeyperson's rate
Supplemental Rate Per Hour: $31.24

Floor Coverer (Fourth Year)

Effective Period: 7/1/2019 - 6/30/2020
Wage Rate Per Hour: 80% of Journeyperson's rate
Supplemental Rate Per Hour: $31.24

(Carpenters District Council)

GLAZIER
(Ratio of Apprentice to Journeyperson: 1 to 1, 1 to 3)

Glazier (First Year)

Effective Period: 7/1/2019 - 6/30/2020
Wage and Supplemental Rate Per Hour: 40% of Journeyperson's rate

Glazier (Second Year)

Effective Period: 7/1/2019 - 6/30/2020
Wage and Supplemental Rate Per Hour: 50% of Journeyperson's rate

Glazier (Third Year)

Effective Period: 7/1/2019 - 6/30/2020
Wage and Supplemental Rate Per Hour: 60% of Journeyperson's rate

Glazier (Fourth Year)

Effective Period: 7/1/2019 - 6/30/2020
Wage and Supplemental Rate Per Hour: 80% of Journeyperson's rate

(Local #1281)

HAZARDOUS MATERIAL HANDLER
(Ratio of Apprentice Journeyperson: 1 to 1, 1 to 3)

Handler (First 1000 Hours)

Effective Period: 7/1/2019 - 6/30/2020
Wage Rate Per Hour: 78% of Journeyperson's rate
Supplemental Benefit Rate Per Hour: $14.25

Handler (Second 1000 Hours)

Effective Period: 7/1/2019 - 6/30/2020
Wage Rate Per Hour: 80% of Journeyperson's rate
Supplemental Benefit Rate Per Hour: $14.25

Handler (Third 1000 Hours)

Effective Period: 7/1/2019 - 6/30/2020

Wage Rate Per Hour: 83% of Journeyperson's rate
Supplemental Benefit Rate Per Hour: $14.25

Handler (Fourth 1000 Hours)

Effective Period: 7/1/2019 - 6/30/2020
Wage Rate Per Hour: 89% of Journeyperson's rate
Supplemental Benefit Rate Per Hour: $14.25

(Local #78)

HEAT & FROST INSULATOR
(Ratio of Apprentice to Journeyperson: 1 to 1, 1 to 3)

Heat & Frost Insulator (First Year)

Effective Period: 7/1/2019 - 6/30/2020
Wage and Supplemental Rate Per Hour: 35% of Journeyperson's rate

Heat & Frost Insulator (Second Year)

Effective Period: 7/1/2019 - 6/30/2020
Wage and Supplemental Rate Per Hour: 45% of Journeyperson's rate

Heat & Frost Insulator (Third Year)

Effective Period: 7/1/2019 - 6/30/2020
Wage and Supplemental Rate Per Hour: 55% of Journeyperson's rate

Heat & Frost Insulator (Fourth Year)

Effective Period: 7/1/2019 - 6/30/2020
Wage and Supplemental Rate Per Hour: 65% of Journeyperson's rate

(Local #12)

HOUSE WRECKER
(TOTAL DEMOLITION)
(Ratio of Apprentice to Journeyperson: 1 to 1, 1 to 3)

House Wrecker - First Year

Effective Period: 7/1/2019 - 6/30/2020
Wage Rate per Hour: $21.17
Supplemental Benefit Rate per Hour: $19.09

House Wrecker - Second Year

Effective Period: 7/1/2019 - 6/30/2020
Wage Rate per Hour: $22.32
Supplemental Benefit Rate per Hour: $19.09

House Wrecker - Third Year

Effective Period: 7/1/2019 - 6/30/2020
Wage Rate per Hour: $23.97
Supplemental Benefit Rate per Hour: $19.09

House Wrecker - Fourth Year

Effective Period: 7/1/2019 - 6/30/2020
Wage Rate per Hour: $26.53
Supplemental Benefit Rate per Hour: $19.09

(Mason Tenders District Council)

IRON WORKER - ORNAMENTAL
(Ratio of Apprentice to Journeyperson: 1 to 1, 1 to 4)

Iron Worker (Ornamental) - 1st Ten Months

Effective Period: 7/1/2019 - 6/30/2020
Wage Rate Per Hour: 50% of Journeyperson's rate
Supplemental Rate Per Hour: $40.20

Iron Worker (Ornamental) - 11 -16 Months

Effective Period: 7/1/2019 - 6/30/2020
Wage Rate Per Hour: 55% of Journeyperson's rate
Supplemental Rate Per Hour: $41.44

Iron Worker (Ornamental) - 17 - 22 Months

Effective Period: 7/1/2019 - 6/30/2020
Wage Rate Per Hour: 60% of Journeyperson's rate
Supplemental Rate Per Hour: $42.68

Iron Worker (Ornamental) - 23 - 28 Months

Effective Period: 7/1/2019 - 6/30/2020
Wage Rate Per Hour: 70% of Journeyperson's rate
Supplemental Rate Per Hour: $45.17

Iron Worker (Ornamental) - 29 - 36 Months

Effective Period: 7/1/2019 - 6/30/2020
Wage Rate Per Hour: 80% of Journeyperson's rate
Supplemental Rate Per Hour: $47.65

(Local #580)

IRON WORKER - STRUCTURAL
(Ratio of Apprentice to Journeyperson: 1 to 1, 1 to 6)

Iron Worker (Structural) - 1st Six Months

Effective Period: 7/1/2019 - 6/30/2020
Wage Rate per Hour: $26.62
Supplemental Benefit Rate per Hour: $53.09

Iron Worker (Structural) - 7- 18 Months

Effective Period: 7/1/2019 - 6/30/2020
Wage Rate per Hour: $27.22
Supplemental Benefit Rate per Hour: $53.09

Iron Worker (Structural) - 19 - 36 months

Effective Period: 7/1/2019 - 6/30/2020
Wage Rate per Hour: $27.83
Supplemental Benefit Rate per Hour: $53.09

(Local #40 and #361)

LABORER (FOUNDATION, CONCRETE, EXCAVATING, STREET PIPE LAYER & COMMON)

(Ratio Apprentice to Journeyperson: 1 to 1, 1 to 3)

Laborer (Foundation, Concrete, Excavating, Street Pipe Layer & Common) - First 1000 hours

Effective Period: 7/1/2019 - 6/30/2020
Wage Rate Per Hour: 50% of Journeyperson's rate
Supplemental Rate Per Hour: $44.48

Laborer (Foundation, Concrete, Excavating, Street Pipe Layer & Common) - Second 1000 hours

Effective Period: 7/1/2019 - 6/30/2020
Wage Rate Per Hour: 60% of Journeyperson's rate
Supplemental Rate Per Hour: $44.48

Laborer (Foundation, Concrete, Excavating, Street Pipe Layer & Common) - Third 1000 hours

Effective Period: 7/1/2019 - 6/30/2020
Wage Rate Per Hour: 75% of Journeyperson's rate
Supplemental Rate Per Hour: $44.48

Laborer (Foundation, Concrete, Excavating, Street Pipe Layer & Common) - Fourth 1000 hours

Effective Period: 7/1/2019 - 6/30/2020
Wage Rate Per Hour: 90% of Journeyperson's rate
Supplemental Rate Per Hour: $44.48

(Local #731)

MARBLE MECHANICS

(Ratio of Apprentice to Journeyperson: 1 to 1, 1 to 4)

Cutters & Setters - First 750 Hours

Effective Period: 7/1/2019 - 6/30/2020
Wage and Supplemental Rate Per Hour: 40% of Journeyperson's rate

NO BENEFITS PAID DURING THE FIRST TWO MONTHS (PROBATIONARY PERIOD)

Cutters & Setters - Second 750 Hours

Effective Period: 7/1/2019 - 6/30/2020
Wage and Supplemental Rate Per Hour: 45% of Journeyperson's rate

Cutters & Setters - Third 750 Hours

Effective Period: 7/1/2019 - 6/30/2020
Wage and Supplemental Rate Per Hour: 50% of Journeyperson's rate

Cutters & Setters - Fourth 750 Hours

Effective Period: 7/1/2019 - 6/30/2020
Wage and Supplemental Rate Per Hour: 55% of Journeyperson's rate

Cutters & Setters - Fifth 750 Hours

Effective Period: 7/1/2019 - 6/30/2020
Wage and Supplemental Rate Per Hour: 60% of Journeyperson's rate

Cutters & Setters - Sixth 750 Hours

Effective Period: 7/1/2019 - 6/30/2020
Wage and Supplemental Rate Per Hour: 65% of Journeyperson's rate

Cutters & Setters - Seventh 750 Hours

Effective Period: 7/1/2019 - 6/30/2020
Wage and Supplemental Rate Per Hour: 70% of Journeyperson's rate

Cutters & Setters - Eighth 750 Hours

Effective Period: 7/1/2019 - 6/30/2020
Wage and Supplemental Rate Per Hour: 75% of Journeyperson's rate

Cutters & Setters - Ninth 750 Hours

Effective Period: 7/1/2019 - 6/30/2020
Wage and Supplemental Rate Per Hour: 85% of Journeyperson's rate

Cutters & Setters - Tenth 750 Hours

Effective Period: 7/1/2019 - 6/30/2020
Wage and Supplemental Rate Per Hour: 95% of Journeyperson's rate

Polishers & Finishers - First 900 Hours

Effective Period: 7/1/2019 - 6/30/2020
Wage and Supplemental Rate Per Hour: 70% of Journeyperson's rate

NO BENEFITS PAID DURING THE FIRST TWO MONTHS (PROBATIONARY PERIOD)

Polishers & Finishers - Second 900 Hours

Effective Period: 7/1/2019 - 6/30/2020
Wage and Supplemental Rate Per Hour: 80% of Journeyperson's rate

Polishers & Finishers - Third 900 Hours

Effective Period: 7/1/2019 - 6/30/2020
Wage and Supplemental Rate Per Hour: 90% of Journeyperson's rate

(Local #7)

MASON TENDER
(Ratio of Apprentice to Journeyperson: 1 to 1, 1 to 3)

Mason Tender - First Year

Effective Period: 7/1/2019 - 6/30/2020
Wage Rate per Hour: $21.39
Supplemental Benefit Rate per Hour: $19.90

Mason Tender - Second Year

Effective Period: 7/1/2019 - 6/30/2020
Wage Rate per Hour: $22.54
Supplemental Benefit Rate per Hour: $19.90

Mason Tender - Third Year

Effective Period: 7/1/2019 - 6/30/2020
Wage Rate per Hour: $24.29
Supplemental Benefit Rate per Hour: $19.90

Mason Tender - Fourth Year

Effective Period: 7/1/2019 - 6/30/2020
Wage Rate per Hour: $26.95
Supplemental Benefit Rate per Hour: $19.90

(Local #79)

METALLIC LATHER
(Ratio of Apprentice to Journeyperson: 1 to 1, 1 to 3)

Metallic Lather (First Year)

Effective Period: 7/1/2019 - 6/30/2020
Wage Rate per Hour: $23.04
Supplemental Benefit Rate per Hour: $20.00

Metallic Lather (Second Year)

Effective Period: 7/1/2019 - 6/30/2020
Wage Rate per Hour: $28.38
Supplemental Benefit Rate per Hour: $20.66

Metallic Lather (Third Year)

Effective Period: 7/1/2019 - 6/30/2020
Wage Rate per Hour: $34.68
Supplemental Benefit Rate per Hour: $21.32

Metallic Lather (Fourth Year)

Effective Period: 7/1/2019 - 6/30/2020
Wage Rate per Hour: $37.18
Supplemental Benefit Rate per Hour: $21.82

(Local #46)

MILLWRIGHT
(Ratio of Apprentice to Journeyperson: 1 to 1, 1 to 4)

Millwright (First Year)

Effective Period: 7/1/2019 - 6/30/2020
Wage Rate per Hour: $29.16
Supplemental Benefit Rate per Hour: $34.66

Millwright (Second Year)

Effective Period: 7/1/2019 - 6/30/2020
Wage Rate per Hour: $34.46
Supplemental Benefit Rate per Hour: $38.31

Millwright (Third Year)

Effective Period: 7/1/2019 - 6/30/2020
Wage Rate per Hour: $39.76
Supplemental Benefit Rate per Hour: $42.61

Millwright (Fourth Year)

Effective Period: 7/1/2019 - 6/30/2020
Wage Rate per Hour: $50.36
Supplemental Benefit Rate per Hour: $49.27

(Local #740)

PAINTER
(Ratio of Apprentice to Journeyperson: 1 to 1, 1 to 3)

Painter - Brush & Roller - First Year

Effective Period: 7/1/2019 - 6/30/2020
Wage Rate per Hour: $17.20
Supplemental Benefit Rate per Hour: $15.05

Painter - Brush & Roller - Second Year

Effective Period: 7/1/2019 - 6/30/2020
Wage Rate per Hour: $21.50
Supplemental Benefit Rate per Hour: $19.39

Painter - Brush & Roller - Third Year

Effective Period: 7/1/2019 - 6/30/2020
Wage Rate per Hour: $25.80
Supplemental Benefit Rate per Hour: $22.79

Painter - Brush & Roller - Fourth Year

Effective Period: 7/1/2019 - 6/30/2020
Wage Rate per Hour: $34.40
Supplemental Benefit Rate per Hour: $29.16

(District Council of Painters)

PAINTER - METAL POLISHER
(Ratio of Apprentice to Journeyperson: 1 to 1, 1 to 3)

Metal Polisher (First Year)

Effective Period: 7/1/2019 - 6/30/2020
Wage Rate per Hour: $13.00
Supplemental Benefit Rate per Hour: $5.13

Metal Polisher (Second Year)

Effective Period: 7/1/2019 - 6/30/2020
Wage Rate per Hour: $13.00
Supplemental Benefit Rate per Hour: $5.13

Metal Polisher (Third Year)

Effective Period: 7/1/2019 - 6/30/2020
Wage Rate per Hour: $15.75
Supplemental Benefit Rate per Hour: $5.13

(Local 8A-28)

PAINTER - STRUCTURAL STEEL
(Ratio of Apprentice to Journeyperson: 1 to 1, 1 to 3)

Painters - Structural Steel (First Year)

Effective Period: 7/1/2019 - 6/30/2020
Wage and Supplemental Rate Per Hour: 40% of Journeyperson's rate

Painters - Structural Steel (Second Year)

Effective Period: 7/1/2019 - 6/30/2020
Wage and Supplemental Rate Per Hour: 60% of Journeyperson's rate

Painters - Structural Steel (Third Year)

Effective Period: 7/1/2019 - 6/30/2020
Wage and Supplemental Rate Per Hour: 80% of Journeyperson's rate

(Local #806)

PAVER AND ROADBUILDER
(Ratio of Apprentice to Journeyperson: 1 to 1, 1 to 3)

Paver and Roadbuilder - First Year (Minimum 1000 hours)

Effective Period: 7/1/2019 - 6/30/2020
Wage Rate per Hour: $28.86
Supplemental Benefit Rate per Hour: $21.40

Paver and Roadbuilder - Second Year (Minimum 1000 hours)

Effective Period: 7/1/2019 - 6/30/2020
Wage Rate per Hour: $30.50
Supplemental Benefit Rate per Hour: $21.40

(Local #1010)

PLASTERER
(Ratio of Apprentice to Journeyperson: 1 to 1, 1 to 3)

Plasterer - First Year: 1st Six Months

Effective Period: 7/1/2019 - 6/30/2020
Wage Rate Per Hour: 40% of Journeyperson's rate
Supplemental Rate Per Hour: $13.88

Plasterer - First Year: 2nd Six Months

Effective Period: 7/1/2019 - 6/30/2020
Wage Rate Per Hour: 45% of Journeyperson's rate
Supplemental Rate Per Hour: $14.36

Plasterer - Second Year: 1st Six Months

Effective Period: 7/1/2019 - 6/30/2020
Wage Rate Per Hour: 55% of Journeyperson's rate
Supplemental Rate Per Hour: $16.44

Plasterer - Second Year: 2nd Six Months

Effective Period: 7/1/2019 - 6/30/2020
Wage Rate Per Hour: 60% of Journeyperson's rate
Supplemental Rate Per Hour: $17.53

Plasterer - Third Year: 1st Six Months

Effective Period: 7/1/2019 - 6/30/2020
Wage Rate Per Hour: 70% of Journeyperson's rate
Supplemental Rate Per Hour: $19.72

Plasterer - Third Year: 2nd Six Months

Effective Period: 7/1/2019 - 6/30/2020
Wage Rate Per Hour: 75% of Journeyperson's rate
Supplemental Rate Per Hour: $20.81

(Local #530)

PLASTERER - TENDER
(Ratio of Apprentice to Journeyperson: 1 to 1, 1 to 3)

Plasterer Tender - First Year

Effective Period: 7/1/2019 - 6/30/2020
Wage Rate per Hour: $21.39
Supplemental Benefit Rate per Hour: $19.90

Plasterer Tender - Second Year

Effective Period: 7/1/2019 - 6/30/2020
Wage Rate per Hour: $22.54
Supplemental Benefit Rate per Hour: $19.90

Plasterer Tender - Third Year

Effective Period: 7/1/2019 - 6/30/2020
Wage Rate per Hour: $24.29
Supplemental Benefit Rate per Hour: $19.90

Plasterer Tender - Fourth Year

Effective Period: 7/1/2019 - 6/30/2020
Wage Rate per Hour: $26.95
Supplemental Benefit Rate per Hour: $19.90

(Local #79)

PLUMBER
(Ratio of Apprentice to Journeyperson: 1 to 1, 1 to 3)

Plumber - First Year: 1st Six Months

Effective Period: 7/1/2019 - 6/30/2020
Wage Rate per Hour: $16.28
Supplemental Benefit Rate per Hour: $5.43

Plumber - First Year: 2nd Six Months

Effective Period: 7/1/2019 - 6/30/2020
Wage Rate per Hour: $19.28
Supplemental Benefit Rate per Hour: $6.43

Plumber - Second Year

Effective Period: 7/1/2019 - 6/30/2020
Wage Rate per Hour: $27.23
Supplemental Benefit Rate per Hour: $19.80

Plumber - Third Year

Effective Period: 7/1/2019 - 6/30/2020
Wage Rate per Hour: $29.33
Supplemental Benefit Rate per Hour: $19.80

Plumber - Fourth Year

Effective Period: 7/1/2019 - 6/30/2020
Wage Rate per Hour: $32.18
Supplemental Benefit Rate per Hour: $19.80

Plumber - Fifth Year: 1st Six Months

Effective Period: 7/1/2019 - 6/30/2020
Wage Rate per Hour: $33.58
Supplemental Benefit Rate per Hour: $19.80

Plumber - Fifth Year: 2nd Six Months

Effective Period: 7/1/2019 - 6/30/2020
Wage Rate per Hour: $45.65
Supplemental Benefit Rate per Hour: $19.80

(Plumbers Local #1)

POINTER, WATERPROOFER, CAULKER, SANDBLASTER, STEAMBLASTER
(Exterior Building Renovation)
(Ratio of Apprentice to Journeyperson: 1 to 1, 1 to 4)

Pointer, Waterproofer, Caulker, Sandblaster, Steamblaster - First Year

Effective Period: 7/1/2019 - 6/30/2020
Wage Rate per Hour: $26.36
Supplemental Benefit Rate per Hour: $14.00

Pointer, Waterproofer, Caulker, Sandblaster, Steamblaster - Second Year

Effective Period: 7/1/2019 - 6/30/2020
Wage Rate per Hour: $29.42
Supplemental Benefit Rate per Hour: $18.97

Pointer, Waterproofer, Caulker, Sandblaster, Steamblaster - Third Year

Effective Period: 7/1/2019 - 6/30/2020
Wage Rate per Hour: $34.80
Supplemental Benefit Rate per Hour: $21.72

Pointer, Waterproofer, Caulker, Sandblaster, Steamblaster - Fourth Year

Effective Period: 7/1/2019 - 6/30/2020
Wage Rate per Hour: $41.93
Supplemental Benefit Rate per Hour: $22.72

(Bricklayer District Council)

ROOFER
(Ratio of Apprentice to Journeyperson: 1 to 1, 1 to 2)

Roofer - First Year

Effective Period: 7/1/2019 - 6/30/2020
Wage Rate Per Hour: 35% of Journeyperson's rate
Supplemental Benefit Rate Per Hour: $3.36

Roofer - Second Year

Effective Period: 7/1/2019 - 6/30/2020
Wage Rate Per Hour: 50% of Journeyperson's rate
Supplemental Benefit Rate Per Hour: $16.92

Roofer - Third Year

Effective Period: 7/1/2019 - 6/30/2020
Wage Rate Per Hour: 60% of Journeyperson's rate
Supplemental Benefit Rate Per Hour: $20.29

Roofer - Fourth Year

Effective Period: 7/1/2019 - 6/30/2020
Wage Rate Per Hour: 75% of Journeyperson's rate
Supplemental Benefit Rate Per Hour: $25.37

(Local #8)

SHEET METAL WORKER
(Ratio of Apprentice to Journeyperson: 1 to 1, 1 to 3)

Sheet Metal Worker (0-6 Months)

Effective Period: 7/1/2019 - 6/30/2020
Wage Rate Per Hour: 25% of Journeyperson's rate
Supplemental Rate Per Hour: $6.51

Sheet Metal Worker (7-18 Months)

Effective Period: 7/1/2019 - 6/30/2020
Wage Rate Per Hour: 35% of Journeyperson's rate
Supplemental Rate Per Hour: $18.57

Sheet Metal Worker (19-30 Months)

Effective Period: 7/1/2019 - 6/30/2020
Wage Rate Per Hour: 45% of Journeyperson's rate
Supplemental Rate Per Hour: $25.40

Sheet Metal Worker (31-36 Months)

Effective Period: 7/1/2019 - 6/30/2020
Wage Rate Per Hour: 55% of Journeyperson's rate
Supplemental Rate Per Hour: $29.95

Sheet Metal Worker (37-42 Months)

Effective Period: 7/1/2019 - 6/30/2020
Wage Rate Per Hour: 55% of Journeyperson's rate
Supplemental Rate Per Hour: $29.95

Sheet Metal Worker (43-48 Months)

Effective Period: 7/1/2019 - 6/30/2020
Wage Rate Per Hour: 70% of Journeyperson's rate
Supplemental Rate Per Hour: $36.83

Sheet Metal Worker (49-54 Months)

Effective Period: 7/1/2019 - 6/30/2020
Wage Rate Per Hour: 70% of Journeyperson's rate
Supplemental Rate Per Hour: $36.83

Sheet Metal Worker (55-60 Months)

Effective Period: 7/1/2019 - 6/30/2020
Wage Rate Per Hour: 80% of Journeyperson's rate
Supplemental Rate Per Hour: $41.42

(Local #28)

SIGN ERECTOR
(Ratio of Apprentice to Journeyperson: 1 to 1, 1 to 4)

Sign Erector - First Year: 1st Six Months

Effective Period: 7/1/2019 - 6/30/2020
Wage Rate Per Hour: 35% of Journeyperson's rate
Supplemental Rate Per Hour: $15.75

Sign Erector - First Year: 2nd Six Months

Effective Period: 7/1/2019 - 6/30/2020
Wage Rate Per Hour: 40% of Journeyperson's rate
Supplemental Rate Per Hour: $17.86

Sign Erector - Second Year: 1st Six Months

Effective Period: 7/1/2019 - 6/30/2020
Wage Rate Per Hour: 45% of Journeyperson's rate
Supplemental Rate Per Hour: $19.98

Sign Erector - Second Year: 2nd Six Months

Effective Period: 7/1/2019 - 6/30/2020
Wage Rate Per Hour: 50% of Journeyperson's rate
Supplemental Rate Per Hour: $22.12

Sign Erector - Third Year: 1st Six Months

Effective Period: 7/1/2019 - 6/30/2020

Wage Rate Per Hour: 55% of Journeyperson's rate
Supplemental Rate Per Hour: $29.92

Sign Erector - Third Year: 2nd Six Months

Effective Period: 7/1/2019 - 6/30/2020
Wage Rate Per Hour: 60% of Journeyperson's rate
Supplemental Rate Per Hour: $32.56

Sign Erector - Fourth Year: 1st Six Months

Effective Period: 7/1/2019 - 6/30/2020
Wage Rate Per Hour: 65% of Journeyperson's rate
Supplemental Rate Per Hour: $35.92

Sign Erector - Fourth Year: 2nd Six Months

Effective Period: 7/1/2019 - 6/30/2020
Wage Rate Per Hour: 70% of Journeyperson's rate
Supplemental Rate Per Hour: $38.65

Sign Erector - Fifth Year

Effective Period: 7/1/2019 - 6/30/2020
Wage Rate Per Hour: 75% of Journeyperson's rate
Supplemental Rate Per Hour: $41.33

Sign Erector - Sixth Year

Effective Period: 7/1/2019 - 6/30/2020
Wage Rate Per Hour: 80% of Journeyperson's rate
Supplemental Rate Per Hour: $44.01

(Local #137)

STEAMFITTER
(Ratio of Apprentice to Journeyperson: 1 to 1, 1 to 3)

Steamfitter - First Year

Effective Period: 7/1/2019 - 6/30/2020
Wage Rate and Supplemental Per Hour: 40% of Journeyperson's rate

Steamfitter - Second Year

Effective Period: 7/1/2019 - 6/30/2020
Wage Rate and Supplemental Rate Per Hour: 50% of Journeyperson's rate.

Steamfitter - Third Year

Effective Period: 7/1/2019 - 6/30/2020
Wage Rate and Supplemental Rate per Hour: 65% of Journeyperson's rate.

Steamfitter - Fourth Year

Effective Period: 7/1/2019 - 6/30/2020
Wage Rate and Supplemental Rate Per Hour: 80% of Journeyperson's rate.

Steamfitter - Fifth Year

Effective Period: 7/1/2019 - 6/30/2020
Wage Rate and Supplemental Rate Per Hour: 85% of Journeyperson's rate.

(Local #638)

STONE MASON - SETTER
(Ratio Apprentice of Journeyperson: 1 to 1, 1 to 2)

Stone Mason - Setters - First 750 Hours

Effective Period: 7/1/2019 - 6/30/2020
Wage and Supplemental Rate Per Hour: 50% of Journeyperson's rate

Stone Mason - Setters - Second 750 Hours

Effective Period: 7/1/2019 - 6/30/2020
Wage Rate Per Hour: 60% of Journeyperson's rate
Supplemental Rate Per Hour: 50% of Journeyperson's rate

Stone Mason - Setters - Third 750 Hours

Effective Period: 7/1/2019 - 6/30/2020
Wage Rate Per Hour: 70% of Journeyperson's rate
Supplemental Rate Per Hour: 50% of Journeyperson's rate

Stone Mason - Setters - Fourth 750 Hours

Effective Period: 7/1/2019 - 6/30/2020
Wage Rate Per Hour: 80% of Journeyperson's rate
Supplemental Rate Per Hour: 50% of Journeyperson's rate

Stone Mason - Setters - Fifth 750 Hours

Effective Period: 7/1/2019 - 6/30/2020
Wage Rate Per Hour: 90% of Journeyperson's rate
Supplemental Rate Per Hour: 50% of Journeyperson's rate

Stone Mason - Setters - Sixth 750 Hours

Effective Period: 7/1/2019 - 6/30/2020
Wage Rate Per Hour: 100% of Journeyperson's rate
Supplemental Rate Per Hour: 50% of Journeyperson's rate

(Bricklayers District Council)

TAPER
(Ratio of Apprentice to Journeyperson: 1 to 1, 1 to 4)

Drywall Taper - First Year

Effective Period: 7/1/2019 - 6/30/2020
Wage and Supplemental Rate Per Hour: 40% of Journeyperson's rate

Drywall Taper - Second Year

Effective Period: 7/1/2019 - 6/30/2020
Wage and Supplemental Rate Per Hour: 60% of Journeyperson's rate

Drywall Taper - Third Year

Effective Period: 7/1/2019 - 6/30/2020
Wage and Supplemental Rate Per Hour: 80% of Journeyperson's rate

(Local #1974)

TILE LAYER - SETTER
(Ratio of Apprentice to Journeyperson: 1 to 1, 1 to 4)

Tile Layer - Setter - First 750 Hours

Effective Period: 7/1/2019 - 6/30/2020
Wage and Supplemental Rate Per Hour: 50% of Journeyperson's rate

Tile Layer - Setter - Second 750 Hours

Effective Period: 7/1/2019 - 6/30/2020
Wage and Supplemental Rate Per Hour: 55% of Journeyperson's rate

Tile Layer - Setter - Third 750 Hours

Effective Period: 7/1/2019 - 6/30/2020
Wage and Supplemental Rate Per Hour: 65% of Journeyperson's rate

Tile Layer - Setter - Fourth 750 Hours

Effective Period: 7/1/2019 - 6/30/2020
Wage and Supplemental Rate Per Hour: 75% of Journeyperson's rate

Tile Layer - Setter - Fifth 750 Hours

Effective Period: 7/1/2019 - 6/30/2020
Wage and Supplemental Rate Per Hour: 85% of Journeyperson's rate

Tile Layer - Setter - Sixth 750 Hours

Effective Period: 7/1/2019 - 6/30/2020
Wage and Supplemental Rate Per Hour: 95% of Journeyperson's rate

(Local #7)

TIMBERPERSON
(Ratio of Apprentice to Journeyperson: 1 to 1, 1 to 6)

Timberperson - First Year

Effective Period: 7/1/2019 - 6/30/2020
Wage Rate Per Hour: 40% of Journeyperson's rate
Supplemental Rate Per Hour: $33.76

Timberperson - Second Year

Effective Period: 7/1/2019 - 6/30/2020

Wage Rate Per Hour: 50% of Journeyperson's rate
Supplemental Rate Per Hour: $33.76

Timberperson - Third Year

Effective Period: 7/1/2019 - 6/30/2020
Wage Rate Per Hour: 65% of Journeyperson's rate
Supplemental Rate Per Hour: $33.76

Timberperson - Fourth Year

Effective Period: 7/1/2019 - 6/30/2020
Wage Rate Per Hour: 80% of Journeyperson's rate
Supplemental Rate Per Hour: $33.76

(Local #1536)

THE CITY OF NEW YORK
OFFICE OF THE COMPTROLLER
1 CENTRE STREET ROOM 1120
NEW YORK, N.Y. 10007-2341

TELEPHONE: (212) 669-3622
FAX NUMBER: (212) 669-8499

Leonard A. Mancusi
SENIOR ASSISTANT COMPTROLLER

ALAN G. HEVESI
COMPTROLLER

MEMORANDUM

November 6, 2000

To Agency Chief Contracting Officers

From: Leonard A. Mancusi

Re: Security at Construction Sites

Prior to the enactment of Administrative Code §6-109, security guards on construction sites were not subject to prevailing wages. Security guards under the New York State labor law are covered under §230 which provides that prevailing wages are to be paid for security guards in existing buildings. §6-109 of the Administrative Code which was enacted in 1996 closed this loophole by including all security guards working pursuant to a city contract as a prevailing wage trade.

Although some construction contract boilerplate language has been amended to include §6-109, sub-contractors performing security services have advised us that they were not aware of this provision and, since traditionally, security guards were not a covered trade on construction sites, and they were not advised by a prime contractor that they would have to pay prevailing wages, they have not been doing so.

To avoid the possibility of issuing stop payments against prime contractors for the failure of their security service sub-contractors to pay

prevailing wages, we suggest that you write to all your existing security guard sub-contractors and their primes and in the future, upon approval of a security guard sub-contractor, advise the contractors of their obligation to pay prevailing wages under §6-109 of the Administrative Code.

As always, your cooperation is appreciated.

LAM:er
ACCO.SECURITY AT SITES

(NO TEXT ON THIS PAGE)

Department of Design and Construction

INFRASTRUCTURE DIVISION

BUREAU OF DESIGN

VOLUME 2 OF 3

PROJECT ID: SANDRESM1

INSTALLATION OF EAST SIDE COASTAL RESILENCY FROM MONTGOMERY STREET TO EAST 15TH STREET

TOGETHER WITH ALL WORK INCIDENTAL THERETO

INCLUDING FLOOD PROTECTION SYSTEM, ROLLER AND SWING GATES, PARK RECONSTRUCTION, SEWER, PEDESTRIAN BRIDGES, PARK, BUILDINGS, GROUND IMPROVEMENT, STREET LIGHTING AND TRAFFIC WORK

Together With All Work Incidental Thereto
BOROUGH OF MANHATTAN
CITY OF NEW YORK

_____

Contractor.

_____

Dated_____, **20**_____

_____

APPROVED AS TO FORM
CERTIFIED AS TO LEGAL AUTHORITY

_____

Acting Corporation Counsel

_____

Dated_____, **20**_____

_____

(NO TEXT ON THIS PAGE)

Department of Design and Construction

INFRASTRUCTURE DIVISION

BUREAU OF DESIGN

VOLUME 2 OF 3

PROJECT ID: SANDRESM1

INSTALLATION OF EAST SIDE COASTAL RESILENCY FROM MONTGOMERY STREET TO EAST 15TH STREET

TOGETHER WITH ALL WORK INCIDENTAL THERETO

INCLUDING FLOOD PROTECTION SYSTEM, ROLLER AND SWING GATES, PARK RECONSTRUCTION, SEWER, PEDESTRIAN BRIDGES, PARK, BUILDINGS, GROUND IMPROVEMENT, STREET LIGHTING AND TRAFFIC WORK

Together With All Work Incidental Thereto

BOROUGH OF MANHATTAN

CITY OF NEW YORK

_____

Contractor.

_____

Dated_____, **20**_____

_____

Department of Design and Construction

INFRASTRUCTURE DIVISION

BUREAU OF DESIGN

VOLUME 2 OF 3

PROJECT ID: SANDRESM1

INSTALLATION OF EAST SIDE COASTAL RESILENCY FROM MONTGOMERY STREET TO EAST 15TH STREET

TOGETHER WITH ALL WORK INCIDENTAL THERETO

INCLUDING FLOOD PROTECTION SYSTEM, ROLLER AND SWING GATES, PARK RECONSTRUCTION, SEWER, PEDESTRIAN BRIDGES, PARK, BUILDINGS, GROUND IMPROVEMENT, STREET LIGHTING AND TRAFFIC WORK

Together With All Work Incidental Thereto
BOROUGH OF MANHATTAN
CITY OF NEW YORK

_____

Contractor.

_____

Dated_____, **20**_____

_____

APPROVED AS TO FORM
CERTIFIED AS TO LEGAL AUTHORITY

_____

Acting Corporation Counsel

CAC
12/22/2020

_____

Dated December 22, **20**20

_____

Department of Design and Construction

THE CITY OF NEW YORK

DEPARTMENT OF DESIGN AND CONSTRUCTION

DIVISION OF INFRASTRUCTURE

30-30 THOMSON AVENUE
LONG ISLAND CITY, NY, 11101
TEL: 718.391.1000
WEB: www.nyc.gov/ddc

DDC SPONSOR AGENCY:

NEW YORK CITY DEPARTMENT OF PARKS AND RECREATION

PREPARED BY:

AKRF / KSE JV

DATE PREPARED:

DECEMBER 16, 2020

VOLUME 3 OF 3

FOR FURNISHING ALL LABOR AND MATERIALS NECESSARY AND REQUIRED FOR:

PROJECT ID: SANDRESM1

SCHEDULE A SPECIFICATIONS AND REVISIONS TO STANDARD SPECIFICATIONS

FOR FURNISHING ALL LABOR AND MATERIALS NECESSARY AND REQUIRED FOR:

INSTALLATION OF EAST SIDE COASTAL RESILENCY FROM MONTGOMERY STREET TO EAST 15TH STREET

INCLUDING FLOOD PROTECTION SYSTEM, ROLLER AND SWING GATES, PARK RECONSTRUCTION, SEWER, PEDESTRIAN BRIDGES, PARK, BUILDINGS, GROUND IMPROVEMENT, STREET LIGHTING AND TRAFFIC WORK

TOGETHER WITH ALL WORK INCIDENTAL THERETO

BOROUGH OF MANHATTAN

CITY OF NEW YORK

HUD FUNDED

VOLUME 3 OF 3

TABLE OF CONTENTS

SECTION	DESCRIPTION	PAGES
SPECIFICATIONS AND STANDARDS OF NEW YORK CITY		1 to 2
SCHEDULE A	GENERAL CONDITIONS TO CONSTRUCTION CONTRACT	SA-1 to SA-12
R – PAGES	REVISIONS TO STANDARD SPECIFICATIONS	R-1 to R-2
PROJECT DESCRIPTION	PROJECT DESCRIPTION AND NYSDOT SPECIFICATION REFERENCES	PD–1 to PD-8
GENERAL-PAGES	GENERAL SPECIAL SPECIFICATIONS	G-1 to G-51
S – PAGES	SPECIAL PROVISIONS	S-1 to S-78
PARKS-PAGES	SPECIAL PARKS SPECIFICATIONS	PARKS-1 to PARKS-605
FLOODWALL-PAGES	SPECIAL FLOODWALL SPECIFICATIONS	FW-1 to FW-210
FLOODGATE-PAGES	SPECIAL FLOODGATE SPECIFICATIONS	FG-1 to FG-32
BRIDGES- PAGES	SPECIAL BRIDGES SPECIFICATIONS	BRIDGES-1 to BRIDGES -99
BUILDINGS- PAGES	SPECIAL BUILDINGS SPECIFICATIONS	BLDG-1 to BLDG-688
PC-PAGES	PARALLEL CONVEYANCE SPECIFICATIONS	PC-1 to PC-106
HAZ – PAGES	SPECIFICATIONS FOR HANDLING, TRANSPORTATION POTENTIALLY HAZARDOUS CONTAMINATED MATERIALS	HAZ-1 to HAZ-46
EP7(1.0)-PAGES	GAS COST SHARING (EP-7) STANDARD SPECIFICATIONS	EP7-1 to EP7-29
JB – PAGES	JOINT BID	JB-1 to JB-401
HUD-PAGES	U.S. DEPARTMENT OF HOUSING AND URBAN DEVELOPMENT PROJECTS	HUD-1R to HUD-66R

(NO TEXT ON THIS PAGE)

SPECIFICATIONS AND STANDARDS OF NEW YORK CITY

The following New York City Department of Transportation (NYCDOT) reference documents are available online at: http://www1.nyc.gov/site/ddc/resources/publications.page and https://www1.nyc.gov/html/dot/html/about/dotlibrary.shtml#spec or for purchase between 9:00 A.M. and 3:00 P.M. Bid Window, at 55 Water St., Ground Floor, NYC, N.Y. 10041. Tel. (212) 839-9435.

1. NYCDOT Standard Highway Specifications, August 1, 2015
2. NYC DOT Standard Details of Construction, July 2010 (Revised March 15, 2016)
3. NYCDOT Division of Street Lighting Specifications
4. NYCDOT Division of Street Lighting Standard Drawings
5. NYCDOT Standard Specifications for Traffic Signals
6. NYCDOT Standard Drawings for Traffic Signals

The following reference documents for New York City Department of Environmental Protection (NYCDEP) are available online at: http://www1.nyc.gov/site/ddc/resources/publications.page or for pick up between 8:00 A.M. and 4:00 P.M. at 30-30 Thomson Avenue, 3rd Floor, Division of Infrastructure, Long Island City, N.Y. 11101.
Contact: Mr. Nader Soliman, Tel. (718) 391-1179

1. NYCDEP Standard Sewer and Water Main Specifications, July 1, 2014
2. NYCDEP Instructions for Concrete Specifications, Jan. 92
3. NYCDEP General Specification 11-Concrete, November 1991
4. NYCDEP Sewer Design Standards, (September 2007) Revised August 2018

The following reference documents for New York City Department of Environmental Protection (NYCDEP) are available online at: https://www1.nyc.gov/site/dep/water/green-infrastructure.page or for pick up between 8:00 A.M. and 4:00 P.M. at 30-30 Thomson Avenue, 3rd Floor, Division of Infrastructure, Long Island City, N.Y. 11101.
Contact: Mr. Robert Kuhlmann, Tel. (718) 391-2145

1. NYCDEP Water Main Standard Drawings, November 2010
2. Specifications for Trunk Main Work, July 2014
3. Standard Design and Guidelines for Green Infrastructure Practices, latest version, available only online at: https://www1.nyc.gov/assets/dep/downloads/pdf/water/stormwater/green-infrastructure/green-infrastructure-standard-designs.pdf

Water main work material specifications are available at the Department of Environmental Protection, 59-17 Junction Boulevard, 3rd Floor Low-Rise Building, Flushing, N.Y. 11373-5108.
Contact: Mr. Tarlock Sahansra, P.E., Tel. (718) 595-5302
E-mail: TSAHANSRA@DEP.NYC.GOV

Standard Specifications and Drawings for New York City Fire Department Communications facilities of New York City are available online at https://www1.nyc.gov/assets/fdny/downloads/pdf/about/fdny-plant-operations-standard-drawings-specifications.pdf or for pick up from the FDNY Facilities Management Bureau, Plant Operations Engineering, 316 Sgt. Beers Avenue Cluster 1 Box 16, Fort Totten, N.Y. 11359.
Contact: Mr. Ed Durkin, Tel. (718) 281-3933

Tree Planting Standards of the City of New York Parks & Recreation are available at the following Department of Parks & Recreation website:
http://www.nycgovparks.org/pagefiles/53/Tree-Planting-Standards.pdf

SPECIFICATIONS AND STANDARDS OF PRIVATE UTILITIES

The Following reference document for Private Utility Work is available for pick up between 8:30 A.M. and 4:00 P.M. at 30-30 Thomson Avenue, First Floor Bid Procurement Room, L.I.C., N.Y. 11101.

1. CET SPECIFICATIONS AND SKETCHES dated November 2010.

SCHEDULE A

(GENERAL CONDITIONS TO CONSTRUCTION CONTRACT (INCLUDING GENERAL CONDITIONS RELATED TO ARTICLE 22 – INSURANCE)

PART I. REQUIRED INFORMATION

INFORMATION FOR BIDDERS SECTION 26 BID SECURITY The **Contractor** shall obtain a bid security in the amount indicated to the right.	Required provided the TOTAL BID PRICE set forth on the Bid Form is $1,000,000. or more. Certified Check: 2% of Bid Amount or Bond: 10% of Bid Amount
INFORMATION FOR BIDDERS SECTION 26 PERFORMANCE AND PAYMENT BONDS The **Contractor** shall obtain performance and payment bonds in the amount indicated to the right.	Required for contracts in the amount of $1,000,000 or more. Performance Security shall be in an amount equal to 50% of the Contract Price. Payment Security shall be in an amount equal to 100% of the Contract Price.
INFORMATION FOR BIDDERS DEPARTMENT OF DESIGN AND CONSTRUCTION SAFETY REQUIREMENTS The **Contractor** shall provide the safety personnel as indicated to the right.	■ Project Safety Representative ■ Dedicated, full-time Project Safety Manager
CONTRACT ARTICLE 14 DATE FOR SUBSTANTIAL COMPLETION The **Contractor** shall substantially complete the **Work** in the number of calendar days indicated to the right.	1826, also see Page SA-5
CONTRACT ARTICLE 15 LIQUIDATED DAMAGES If the **Contractor** fails to substantially complete the **Work** within the time fixed for substantial completion plus authorized time extensions or if the **Contractor**, in the sole determination of the **Commissioner**, has abandoned the **Work**, the **Contractor** shall pay to the **City** the amount indicated to the right.	$30,000. for each consecutive calendar day over substantial completion time

CONTRACT ARTICLE 17. **SUB-CONTRACTOR** The **Contractor** shall not make subcontracts totaling an amount more than the percentage of the total **Contract** price indicated to the right.	Not to exceed 49 % of the **Contract** price
CONTRACT ARTICLE 21. **RETAINAGE** The **Commissioner** shall deduct and retain until the substantial completion of the **Work** the percent value of the **Work** indicated to the right.	5 % of the value of the **Work**
CONTRACT ARTICLE 22. **(Per Directions Below)**	See pages SA-6 through SA-13
CONTRACT ARTICLE 24. **DEPOSIT GUARANTEE** As security for the faithful performance of its obligations, the **Contractor**, upon filing its requisition for payment on **Substantial Completion**, shall deposit with the **Commissioner** a sum equal to the percentage of the **Contract** price indicated to the right.	1% of **Contract** price
CONTRACT ARTICLE 24. **PERIOD OF GUARANTEE** Periods of maintenance and guarantee other than the period set forth in Article 24.1 are indicated to the right.	Eighteen (18) Months, excluding Trees Twenty-four (24) Months for Tree Planting
CONTRACT ARTICLE 74. **STATEMENT OF WORK** The **Contractor** shall furnish all labor and materials and perform all **Work** in strict accordance with the **Contract Drawings**, **Specifications,** and all **Addenda** thereto, as **shown in the column to the right.**	**Addenda**, numbered: _____
CONTRACT ARTICLE 75. **COMPENSATION TO BE PAID TO CONTRACTOR** The **City** shall pay and the **Contractor** shall accept in full consideration for the performance of the **Contract**, subject to additions and deductions as provided herein**,** the total sum **shown in the column to the right,** being the amount at which the **Contract** was awarded to the **Contractor** at a public letting thereof, based upon the **Contractor's** bid for the **Contract.**	Amount for which the **Contract** was Awarded: _____ _____ Dollars ($_____)

CONTRACT ARTICLE 79. PARTICIPATION BY MINORITY-OWNED AND WOMEN-OWNED BUSINESS ENTERPRISES IN CITY PROCUREMENT	See M/WBE Utilization Plan in the Bid Booklet
STANDARD HIGHWAY SPECIFICATIONS SECTION 6.40 LIQUIDATED DAMAGES FOR ENGINEER'S FIELD OFFICE If the Contractor fails to satisfactorily provide the field office and all equipment specified in **Section 6.40 - Engineer's Field Office**, and/or if a cited deficiency exceed seventy two (72) hours after notice from the Engineer in writing, or is permitted to recur, liquidated damages will be assessed in the amount specified herein for each subsequent calendar day or part thereof that a cited deficiency resulting in nonpayment, as described in **Section 6.40.5**, is not corrected.	$ 500.00 for each calendar day of deficiency
STANDARD HIGHWAY SPECIFICATIONS SECTION 6.70 LIQUIDATED DAMAGES FOR MAINTENANCE AND PROTECTION OF TRAFFIC	$ 250.00 for each instance of failure to comply with the Maintenance and Protection of Traffic requirements within three (3) hours after written notice from the Engineer. $ 500.00 for each and every hour of failing to open the entire width of roadway to traffic the morning following a night/weekend work operation.
STANDARD HIGHWAY SPECIFICATIONS SECTION 7.13 LIQUIDATED DAMAGES FOR MAINTENANCE OF SITE If the Contractor fails to comply, within three (3) consecutive hours after written notice from the Engineer, with the requirements of **Section 7.13 - Maintenance of Site**, the Contractor shall pay to the City of New York, until such notice has been complied with or rescinded, the sum specified above per calendar day, for each instance of such failure, as liquidated damages and not as a penalty, for such default.	$ 6,000.00 for each calendar day, for each occurrence

Date for Substantial Completion (Reference: Article 14)

The Contractor shall substantially complete the Work within the Final Contract Duration determined in accordance with the terms and conditions set forth herein.

The Base Contract Duration for this project is 1,826 consecutive calendar days ("ccds").

The Final Contract Duration shall be the Base Contract Duration when a check mark is indicated before the word "NO", below, and shall be the Base Contract Duration adjusted by the table set forth below when a check mark is indicated before the word "YES", below.

_____ YES __√__ NO

When the Final Contract Duration is indicated above to be adjusted by the table below, the table may increase the Base Contract Duration depending on the date of scheduled substantial completion to avoid a scheduled substantial completion of the Work during the winter months. The date of scheduled substantial completion shall be determined by adding the Base Contract Duration to the date specified to commence work in the written Notice to Proceed. The Final Contract Duration shall then be determined as follows:

(a) Find the row that corresponds to the month of substantial completion based on the Base Contract Duration added to the date specified to commence work in the written Notice to Proceed.

(b) Find the number of days to be added to the Base Contract Duration in the table below. Add that number of days to the Base Contract Duration to obtain the Final Contract Duration in consecutive calendar days.

Month of Substantial Completion based on the Base Contract Duration	Number of Days of adjustment
January	150
February	120
March	90
April	60
May	30
June	0
July	0
August	0
September	0
October	0
November –December 15	0
December 16 – December 31	180

(GENERAL CONDITIONS RELATING TO ARTICLE 22 – INSURANCE)

PART II. TYPES OF INSURANCE, MINIMUM LIMITS AND SPECIAL CONDITIONS

Note: All certificate(s) of insurance submitted pursuant to Contract Article 22.3. 3 must be accompanied by a Certification by Broker consistent with Part III below and include the following information:

- **For each insurance policy, the name and NAIC number of issuing company, number of policy, and effective dates;**
- **Policy limits consistent with the requirements listed below;**
- **Additional insureds or loss payees consistent with the requirements listed below; and**
- **The number assigned to the Contract by the City (in the "Description of Operations" field).**

Insurance indicated by a blackened box (■) or by X in a □ to left will be required under this contract

Types of Insurance (per Article 22 in its entirety, including listed paragraph)	Minimum Limits and Special Conditions
■ Commercial General Liability Art. 22.1.1	The minimum limits shall be $ 5,000,000 per occurrence and $ 10,000,000 per project aggregate applicable to this **Contract.** Additional Insureds: 1. City of New York, including its officials and employees, with coverage at least as broad as ISO Form CG 20 10 and CG 20 37, 2. All person(s) or organization(s), if any, that Article 22.1.1(b) of the Contract requires to be named as Additional Insured(s), with coverage at least as broad as ISO Form CG 20 26. The Additional Insured endorsement shall either specify the entity's name, if known, or the entity's title (e.g., Project Manager), 3. U.S. Department of Housing and Urban Development (HUD), including its officials and employees. 4. New York City Housing Authority (NYCHA) , including its officials and employees. 5. New York City Economic Development Corporation (EDC), including its officials and employees. 6. Consolidated Edison, Inc. 7. Empire City Subway (ECS) / Verizon. 8. Gouverneur Gardens (GG) Housing Corporation 9. New York City Transit Authority (NYCTA), the Manhattan and Bronx Surface Transit Operating Authority (MaBSTOA), the Staten Island Rapid Transit Operating Authority (SlRTOA), MTA Capital Construction Co., the Metropolitan Transportation Authority (MTA) including its subsidiaries and affiliates 10. East River Housing Corporation (ERH) 11. New York State Department of Transportation (NYSDOT) 12. Altice NV 13. Lower East Side Ecology Center

■ Workers' Compensation Art. 22.1.2 ■ Disability Benefits Insurance Art. 22.1.2 ■ Employers' Liability Art. 22.1.2 ■ Jones Act Art. 22.1.3 ■ U.S. Longshoremen's and Harbor Workers Compensation Act Art. 22.1.3	Workers' Compensation, Employers' Liability, and Disability Benefits Insurance: Statutory per New York State law without regard to jurisdiction. **Note:** The following forms are acceptable: (1) New York State Workers' Compensation Board Form No. C-105.2, (2) State Insurance Fund Form No. U-26.3, (3) New York State Workers' Compensation Board Form No. DB-120.1 and (4) Request for WC/DB Exemption Form No. CE-200. The City will not accept an ACORD form as proof of Workers' Compensation or Disability Insurance. Jones Act and U.S. Longshoremen's and Harbor Workers' Compensation Act: Statutory per U.S. Law. ☐ Additional Requirements:
■ Builders' Risk Art. 22.1.4	☐ Required: 100% of total bid amount ■ Required: 100 % of total bid amount for Item(s): PK-ESCR 049, PK-ESCR 051, PK-ESCR 050A, PK-ESCR 50B, PK-ESCR 501, PK-ESCR 502, PK-ESCR 503, PK-ESCR 032, PK-ESCR 200, PK-ESCR 905, PK-ESCR 947 **Contractor** the Named Insured; the **City** both an Additional Insured and one of the loss payees as its interests may appear. If the **Work** does not involve construction of a new building or gut renovation work, the **Contractor** may provide an installation floater in lieu of Builders Risk insurance. Note: Builders Risk Insurance may terminate upon **Substantial Completion** of the **Work** in its entirety.

■ Commercial Auto Liability Art. 22.1.5	$ 2,000,000 per accident combined single limit If vehicles are used for transporting hazardous materials, the **Contractor** shall provide pollution liability broadened coverage for covered vehicles (endorsement CA 99 48) as well as proof of MCS 90 Additional Insureds: 1. City of New York, including its officials and employees
■ Contractors Pollution Liability Art. 22.1.6	$_5,000,000_ per occurrence $_5,000,000_ aggregate Additional Insureds: 1. City of New York, including its officials and employees, and 2. _____ 3. _____
■ Marine Protection and Indemnity Art. 22.1.7(a)	$_25,000,000_ each occurrence $_25,000,000_ aggregate Additional Insureds: 1. City of New York, including its officials and employees, and 2. _____ 3. _____
☐ Hull and Machinery Insurance Art. 22.1.7(b)	$_____ per occurrence $_____ aggregate Additional Insureds: 1. City of New York, including its officials and employees, and 2. _____ 3. _____

■ Marine Pollution Liability Art. 22.1.7(c)	$ 1,000,000 per occurrence $ 1,000,000 aggregate Additional Insureds: 1. City of New York, including its officials and employees, and 2. _____ 3. _____
[OTHER] Art. 22.1.8 ■ Railroad Protection Liability Policy (ISO-RIMA or equivalent form) approved by Permittor covering the work to be performed at the designated site and affording protection for damages arising out of bodily injury or death, physical damage to or destruction of property, including damage to the Insured's own property and conforming to the following: • Policy Endorsement CG 28 31 - Pollution Exclusion Amendment is required to be endorsed onto the policy when environmental-related work and/or exposures exist. • Indicate the Name and address of the Contractor to perform the work, the Contract # and the name of the railroad property where the work is being performed and the Agency Permit. • Evidence of Railroad Protective Liability Insurance, must be provided in the form of the Original Policy. A detailed Insurance Binder (ACORD or Manuscript Form) will be accepted pending issuance of the Original Policy, which must be provided within 30 days of the Binder Approval.	$ 2,000,000 per occurrence $ 6,000,000 annual aggregate Named Insureds: 1. New York City Transit Authority (NYCTA), the Manhattan and Bronx Surface Transit Operation Authority (MaBSTOA), the Staten Island Rapid Transit Operation Authority (SIRTOA), MTA Capital Construction Co., the Metropolitan Transportation Authority (MTA) including its subsidiaries and affiliates, and the City of New York (as Owner) and all other indemnified parties. □

[OTHER] Art. 22.1.8

■ Professional Liability

A. The Contractor's Professional Engineer shall maintain and submit evidence of Professional Liability Insurance in the minimum amount of $1,000,000 per claim. The policy or policies shall include an endorsement to cover the liability assumed by the Contractor under this Contract arising out of the negligent performance of professional services or caused by an error, omission or negligent act of the Contractor's Professional Engineer or anyone employed by the Contractor's Professional Engineer.

B. Claims-made policies will be accepted for Professional Liability Insurance. All such policies shall have an extended reporting period option or automatic coverage of not less than two (2) years. If available as an option, the Contractor's Professional Engineer shall purchase extended reporting period coverage effective on cancellation or termination of such insurance unless a new policy is secured with a retroactive date, including at least the last policy year.

[OTHER] Art. 22.1.8 ■ Engineer's Field Office **Section 6.40, Standard Highway Specifications**	Fire insurance, extended coverage and vandalism, malicious mischief and burglary, and theft insurance coverage in the amount of $40,000

[OTHER] Art. 22.1.8

■ The Following Additional Insurance Must Be Provided:

Umbrella/Excess Liability Insurance - The Contractor shall provide Umbrella/Excess Liability Insurance in the minimum amount of $200,000,000 per Occurrence and $200,000,000 in Aggregate. The policy terms and condition should be at least as broad as the underlying policies. The underlying policies should comply with the insurance provision as outlined by the contract. Defense cost should be in addition to the limit of liability. The City of New York, including its officials and employees, should be included as additional insured as respects to the noted project.
The Umbrella/Excess Liability Insurance must be purchased specifically and exclusively for the Work and extend to all aspects of the Work, with coverage limits devoted solely to the Work.

SCHEDULE A
(GENERAL CONDITIONS TO CONSTRUCTION CONTRACT)
(GENERAL CONDITIONS RELATING TO ARTICLE 22 – INSURANCE)

PART III. CERTIFICATES OF INSURANCE

All certificates of insurance (except certificates of insurance solely evidencing Workers' Compensation Insurance, Employer's Liability Insurance, and/or Disability Benefits Insurance) must be accompanied by one of the following:

(1) the Certification by Insurance Broker or Agent on the following page setting forth the required information and signatures;

-- OR --

(2) copies of all policies as certified by an authorized representative of the issuing insurance carrier that are referenced in such certificate of insurance. If any policy is not available at the time of submission, certified binders may be submitted until such time as the policy is available, at which time a certified copy of the policy shall be submitted.

CITY OF NEW YORK

CERTIFICATION BY INSURANCE BROKER OR AGENT

The undersigned insurance broker represents to the City of New York that the attached Certificate of Insurance is accurate in all material respects.

_____
[Name of broker or agent (typewritten)]

_____
[Address of broker or agent (typewritten)]

_____
[Email address of broker or agent (typewritten)]

_____
[Phone number/Fax number of broker or agent (typewritten)]

_____
[Signature of authorized official, broker, or agent]

_____
[Name and title of authorized official, broker, or agent (typewritten)]

State of ……)
) ss.:
County of ……)

Sworn to before me this _____ day of _____, 20____

_____
NOTARY PUBLIC FOR THE STATE OF _____

SCHEDULE A

(GENERAL CONDITIONS TO CONSTRUCTION CONTRACT)

PART IV. ADDRESS OF COMMISSIONER

Wherever reference is made in Article 7 or Article 22 to documents to be sent to the **Commissioner** (e.g., notices, filings, or submissions), such documents shall be sent to the address set forth below or, in the absence of such address, to the **Commissioner's** address as provided elsewhere in this **Contract**.

DDC Director, Insurance Risk Manager

30 – 30 Thomson Avenue, 4th Floor (IDCNY Building)

Long Island City, NY 11101

(NO FURTHER TEXT ON THIS PAGE)

R - PAGES

REVISIONS TO STANDARD SPECIFICATIONS

NOTICE

The Specification Bulletin(s) ("SB(s)") referenced in this Section (R-Pages) may consist of revisions to the following Standard Specifications:

- New York City Department of Transportation ("NYC DOT") Standard Highway Specifications, dated 8/1/2015;
- New York City Department of Environmental Protection ("NYC DEP") Standard Sewer and Water Main Specifications, dated 7/1/2014; and
- NYC DEP Specifications for Trunk Main Work, dated 7/2014.

The SB(s) modify and supersede portions of the applicable Standard Specifications. The provisions contained in this Contract's I-Pages, S-Pages and SW-Pages may further modify the applicable Standard Specifications.

The following SB(s) are included as part of this contract:

- SB 16-001 – REVISIONS TO THE NYC DOT STANDARD HIGHWAY SPECIFICATIONS.
- SB 16-002 – REVISIONS TO THE NYC DEP STANDARD SEWER AND WATER MAIN SPECIFICATIONS.
- SB 17-001 – UV CURED-IN-PLACE-PIPE (CIPP) LINING METHOD
- *SB 17-002 – SUPERSEDED BY SB 18-001*
- SB 17-003 – ENGINEERS FIELD OFFICE
- SB 17-004 – FIRE DEPARTMENT FACILITIES
- SB 17-005 – DIGITAL PHOTOGRAPHS
- SB 17-006 – RECORDS OF SUBSURFACE STRUCTURES
- SB 17-007 – MOBILIZATION
- SB 17-008 – QUALIFICATION CARDS
- SB 17-009 – SALVAGEABLE MATERIALS
- SB 17-010 – MILLED ASPHALTIC CONCRETE AGGREGATE
- SB 17-011 – DETECTABLE WARNING UNIT COLOR

- SB 17-012 – TEMPORARY HOUSE CONNECTION MATERIAL
- SB 18-001 – RODENT AND WATERBUG PEST CONTROL
- SB 18-002 – COLOR SURFACE TREATMENT FOR PAVEMENTS
- SB 18-003 – WATER AND SEWER GENERAL PROVISIONS
- SB 18-004 – CUTTING DUCTILE IRON PIPE
- SB 18-005 – STOCKPILES
- SB 19-001 – RESTORATION OF PAVEMENT SURFACE
- SB 19-002 – SCHEDULE OF OPERATIONS

The SB(s) are available online at: http://www1.nyc.gov/site/ddc/resources/specification-bulletins.page or for pickup between 8:00 AM and 4:00 PM at 30-30 Thomson Avenue, 3rd Floor, Division of Infrastructure, Long Island City, NY 11101. Contacts:

- Mr. Richard Jones, (718) 391-1417
- Mr. Salman Macktoom, (718) 391-2041

(NO FURTHER TEXT THIS PAGE)

PROJECT DESCRIPTION

PROJECT DESCRIPTION AND NYSDOT SPECIFICATION REFERENCES

SANDRESM1

The following pages provide the project description and the parameters for using New York State Department of Transportation (NYSDOT) specifications as part of the Contract Work.

(NO TEXT ON THIS PAGE)

SANDRESM1 Project Description:

The project area is located on the East Side of the Borough of Manhattan, New York County, NY. The project area extends from Montgomery Street on the south to the north end of John V. Lindsay East River Park (East River Park) at about East 15th Street. The project area is approximately 61 acres and consists primarily of the Franklin Delano Roosevelt East River Drive (the FDR Drive) right-of-way, a portion of Pier 42 and Corlears Hook Park as well as East River Park. The majority of the project area is within East River Park and includes three existing pedestrian bridges across the FDR Drive to East River Park (Corlears Hook, Delancey Street, and East 10th Street Bridges) and the Houston Street overpass.

The purpose of the project is to install a flood protection system comprised of a combination of floodwalls and closure structures. Specifically, the project includes the construction of above ground floodwall, a transition retaining wall, and installation of 2 swing and roller type steel flood gates and supporting infrastructure improvements that together would reduce risk of damage from coastal storms in the project area.

A key element of the project is elevating and reconstructing East River Park to make it more resilient to coastal storms, including redesigned and enhanced connections to the waterfront and East River Park, with the reconstruction of the Corlears Hook Bridge, the replacement of the Delancey and East 10th Street bridges. These bridge improvements will create more inviting and accessible crossings over the FDR Drive to the reconstructed East River Park and the East River waterfront, including the waterfront shared-use path. The reconstructed bridges at Delancey and East 10th Street also provide more community-oriented access that supports and encourages public access to the waterfront with gentler grades that are consistent with the principle of universal access. Within the park, the bridge landings provide an elevated gateway with expanded views of the reconstructed park and the river.

The park's underground water and sewer infrastructure will be reconstructed, along with existing park structures and recreational features, including the amphitheater, track facility, and tennis house, as part of the raised park. Two existing embayments along the East River Park esplanade are being relocated further north on the bulkhead to allow for siting of active recreation fields within the park and to facilitate a direct and ADA accessible connection to the water.

Concrete

The architectural concrete construction used for the exposed pedestrian bridge abutments, floodwall and retaining wall require review, selection and acceptance of samples and mockups by the Engineer at an early stage. The use of a formliner is required continually for the floodwall and retaining walls and on the bridge abutments at Corlears Hook, Delancey and East 10th Street pedestrian bridges. In order to ensure consistent color throughout the project, the concrete mix should be comprised from uniform aggregate sources and types not varied without approval of the Engineer. A no cost substitute for an alternative concrete mix is acceptable only if it provides consistent color throughout the project.

Any references to "average concrete" refer to Class B-32 per Section ESCR-3.05 in the FLOODWALL-Pages.

Overlapping Scopes of Work

Due to the size, complexity, and varied types of work in this Contract, certain elements of work may be covered under multiple pay items and/or multiple specification sections. The

bidder must clearly read the specifications and fully understand what scope is included in each pay item. Just because an item exists does not imply that the item will be used in all portions of the Contract Work.

Example: Bid Item 50.11CS036050, “3'-6"W X 5'-0"H SINGLE BARREL FLAT TOP REINFORCED CONCRETE COMBINED SEWER”, includes excavation and shoring in the bid unit price per NYCDEP Standard Sewer and Water Specifications Section 50.11.6. The Contractor will not be paid under Bid Item PK-667 “TEMPORARY SHEETING” for installation of shoring when installing pipe under Bid Item 50.11CS036050.

Example: The PARKS-Pages includes Bid Item PK-ESCR-646, “Miscellaneous Iron And Steel” and the FLOODWALL-Pages includes Bid Item ESCR-564, “Structural Steel.” These items will not be used interchangeably but will be used for the scope of work listed at the beginning of the PARKS-Pages and the FLOODWALL-Pages.

NYSDOT Specifications

All requirements as defined in the City of New York Standard Construction Contract (“Standard Construction Contract”) are to be followed. NYSDOT specific construction management and contractual requirements that are referenced in NYSDOT specifications are not to be inadvertently incorporated or take precedent over Contract requirements, including the Standard Construction Contract, Special Specifications or Provisions, the New York City Department of Transportation Standard Highway Specifications, or the New York City Department of Environmental Protection Standard Sewer and Water Specifications.

References are made herein to certain NYSDOT specifications. All references to the "Department", "Materials Bureau", "Regional Engineer", "Regional Landscape Architect", "Landscape Architect", "DCES", or other reference to NYSDOT offices or personnel are deemed to mean the "ENGINEER" as that term is defined in the Standard Construction Contract. However, where references are made to materials or contractors or subcontractors being required to appear on NYSDOT approved lists, these references and requirements remain unchanged.

Reference to NYSDOT specifications will not be deemed to imply NYSDOT or New York State involvement in any testing and approval of materials or in the supervision of construction. In the event of a conflict, the Standard Construction Contract, the contract drawings and New York City specifications will prevail over any NYSDOT specifications, unless the ENGINEER directs otherwise.

ITEM NUMBER	SPECIFICATION NAME	SPECIFICATION TYPE
202.120001	REMOVING EXISTING SUPERSTRUCTURES	NYSDOT STANDARD
202.120002	REMOVING EXISTING SUPERSTRUCTURES	NYSDOT STANDARD

ITEM NUMBER	SPECIFICATION NAME	SPECIFICATION TYPE
202.120003	REMOVING EXISTING SUPERSTRUCTURES	NYSDOT STANDARD
202.19	REMOVAL OF SUBSTRUCTURES	NYSDOT STANDARD
203.02	UNCLASSIFIED EXCAVATION AND DISPOSAL	NYSDOT STANDARD
203.03	EMBANKMENT IN PLACE	NYSDOT STANDARD
203.03950017	EXPANDED POLYSTYRENE FILL	PIN APPROVED
203.07	SELECT GRANULAR FILL	NYSDOT STANDARD
203.12030017	PREFABRICATED VERTICAL DRAINS	PIN APPROVED
203.12230017	FURNISHING EQUIPMENT FOR INSTALLING PREFABRICATED VERTICAL DRAINS	PIN APPROVED
203.12430017	PREPARING SURFACE FOR PREFABRICATED VERTICAL DRAINS	PIN APPROVED
203.20	SELECT GRANULAR SUBGRADE	NYSDOT STANDARD
203.21	SELECT STRUCTURE FILL	NYSDOT STANDARD
203.25	SAND BACKFILL	NYSDOT STANDARD
203.90000017	GRANULAR DRAINAGE BLANKET	PIN APPROVED
203.99010039	DEEP SOIL MIXING	PIN APPROVED
204.01	CONTROLLED LOW STRENGTH MATERIAL	NYSDOT STANDARD
206.01	STRUCTURE EXCAVATION	NYSDOT STANDARD
207.22	GEOTEXTILE DRAINAGE	NYSDOT STANDARD
207.25	GEOMEMBRANE	NYSDOT STANDARD
207.26	PREFABRICATED COMPOSITE STRUCTURAL DRAIN	NYSDOT STANDARD
304.11	SUBBASE COURSE, TYPE 1	NYSDOT STANDARD
520.50000004	SAWING CONCRETE	NYSDOT STANDARD

ITEM NUMBER	SPECIFICATION NAME	SPECIFICATION TYPE
551.012053	STEEL H-PILES (HP 12X53)	NYSDOT STANDARD
551.012084	STEEL H PILES (HP 12X84)	NYSDOT STANDARD
551.014073	STEEL H-PILES (HP 14X73)	NYSDOT STANDARD
551.018181	STEEL H-PILES (HP 18X181)	NYSDOT STANDARD
551.03950017	PREDRILLING HOLES FOR PILES	PIN APPROVED
551.12	SPLICES FOR STEEL H-PILES	NYSDOT STANDARD
551.13	FURNISHING EQUIPEMENT FOR DRIVING PILES	NYSDOT STANDARD
551.14	DYNAMIC PILE TESTING	NYSDOT STANDARD
551.40200017	FURNISHING EQUIPMENT FOR INSTALLING MICROPILES	PIN APPROVED
551.50220017	STATIC PILE LOAD TEST	PIN APPROVED
551.92000008	REMOVAL OF PILES	NYSDOT STANDARD
551.99301239	MICROPILES (DESIGN PROVIDED)	PIN APPROVED
551.99450017	PERMANENT CASING FOR MICROPILES	PIN APPROVED
552.13	TEMPORARY STEEL SHEETING	NYSDOT STANDARD
554.43	FILL TYPE RETAINING WALL (GREATER THAN 18FT-24FT)	NYSDOT STANDARD
555.02000001	CONCRETE FOR STRUCTURES CLASS MP (MASS PLACEMENT)	PIN APPROVED
555.08	FOOTING CONCRETE, CLASS HP	NYSDOT STANDARD
555.09	CONCRETE FOR STRUCTURES, CLASS HP	NYSDOT STANDARD
556.0102	EPOXY-COATED STEEL FABRIC REINFORCEMENT	NYSDOT STANDARD
556.0202	EPOXY-COATED BAR REINFORCEMENT FOR STRUCTURES	NYSDOT STANDARD
556.03	STUD SHEAR CONNECTORS FOR BRIDGES	NYSDOT STANDARD

ITEM NUMBER	SPECIFICATION NAME	SPECIFICATION TYPE
557.0101	SUPERSTRUCTURE SLAB WITH INTEGRAL WEARING SURFACE - BOTTOM FORMWORK REQUIRED - TYPE 1 FRICTION	NYSDOT STANDARD
557.0109	SUPERSTRUCTURE SLAB WITH INTEGRAL WEARING SURFACE - BOTTOM FORMWORK REQURIED - TYPE 9 FRICTION	NYSDOT STANDARD
557.2001	STRUCTURAL APPROACH SLAB WITH INTEGRAL WEARING SURFACE -TYPE 1 FRICTION	NYSDOT STANDARD
557.29	WINTER SURFACE TREATMENT - SUPERSTRUCTURE SLABS AND STRUCTURAL APPROACH SLABS	NYSDOT STANDARD
559.16960118	PROTECTIVE SEALING OF STRUCTURAL CONCRETE	NYSDOT STANDARD
559.18960118	PROTECTIVE SEALING OF STRUCTURAL CONCRETE DECK	NYSDOT STANDARD
595.50000018	SHEET APPLIED WATERPROOFING MEMBRANE	NYSDOT STANDARD
559.90010011	ANTI-GRAFFITI PROTECTION COATING	NYSDOT STANDARD
560.10040010	REMOVAL OF STONE MANSORY	NYSDOT STANDARD
563.0101	PRESTRESSED CONCRETE I-BEAM UNITS (TYPE 1)	NYSDOT STANDARD
563.0105	PRESTRESSED CONCRETE I-BEAM UNITS (TYPE 5)	NYSDOT STANDARD
563.03	PRESTRESSED CONCRETE HOLLOW SLAB UNITS	NYSDOT STANDARD
564.02010211	BRIDGE HANGER ASSEMBLIES	NYSDOT STANDARD
564.0501	STRUCTURAL STEEL - TYPE 1 (STRAIGHT STEEL)	NYSDOT STANDARD
564.0502	STRUCTURAL STEEL - TYPE 2 (CURVED STEEL)	NYSDOT STANDARD
565.14200008	NON-GUIDED POLYTETRAFLUOROETHYLENE (PTEF)SLIDING BEARING	NYSDOT STANDARD
565.1522	TYPE M.R. EXPANSION BEARINGS (226 to 450 KIPS)	NYSDOT STANDARD
565.1523	TYPE M.R. EXPANSION BEARINGS (451 to 675 KIPS)	NYSDOT STANDARD
565.1722	TYPE M.R. FIXED BEARINGS (226 TO 450 KIPS)	NYSDOT STANDARD

ITEM NUMBER	SPECIFICATION NAME	SPECIFICATION TYPE
565.1723	TYPE M.R. FIXED BEARINGS (451 to 675 KIPS)	NYSDOT STANDARD
565.1821	TYPE E.P. BEARING (ALL LOAD RANGES)	NYSDOT STANDARD
565.1921	TYPE E.L. BEARINGS (0 TO 55KIPS)	NYSDOT STANDARD
565.1922	TYPE E.L. BEARINGS (56 TO 111 KIPS)	NYSDOT STANDARD
565.1923	TYPE E.L. BEARINGS (112 TO 168 KIPS)	NYSDOT STANDARD
565.1924	TYPE E.L. BEARINGS (169 TO 225 KIPS)	NYSDOT STANDARD
565.1925	TYPE E.L. BEARING (OVER 225 KIPS)	NYSDOT STANDARD
567.50	ARMORED JOINT SYSTEM WITH PREFORMED ELASTIC STRIP SEAL	NYSDOT STANDARD
567.60	ARMORLESS BRIDGE JOINT SYSTEM	NYSDOT STANDARD
568.12010010	METAL HANDRAIL	PIN APPROVED
569.03	VERTICAL FACED CONCRETE PARAPET	NYSDOT STANDARD
580.01	REMOVAL OF STRUCTURAL CONCRETE	NYSDOT STANDARD
582.06	REMOVAL OF STRUCTURAL CONCRETE - REPLACEMENT WITH CLASS D CONCRETE	NYSDOT STANDARD
582.07	REMOVAL OF STRUCTURAL CONCRETE - REPLACEMENT WITH VERTICAL AND OVERHEAD PATCHING MATERIAL	NYSDOT STANDARD
583.03	REMOVAL OF STRUCTURAL CONCRETE - REPLACEMENT WITH SHOTCRETE, WITH REINFORCEMENT BAR ENCASEMENT	NYSDOT STANDARD
585.01	STRUCTURAL LIFTING OPERATIONS, TYPE A	NYSDOT STANDARD
586.0201	DRILLING AND GROUTING BOLTS OR REINFORCEMENT BARS	NYSDOT STANDARD
595.50000018	SHEET-APPLIED WATERPROOFING MEMBRANE	NYSDOT STANDARD
605.0901	UNDERDRAIN FILTER, TYPE I	NYSDOT STANDARD
605.1503	PERFORATED CORRUGATED POLYETHYLENE UNDERDRAIN TUBING 8 INCH DIAMETER	NYSDOT STANDARD

ITEM NUMBER	SPECIFICATION NAME	SPECIFICATION TYPE
605.1504	PERFORATED CORRUGATED POLYETHYLENE UNDERDRAIN TUBING, 10 INCH DIAMETER	NYSDOT STANDARD
606.2801	HPBO (MOD) CORRUGATED BEAM MEDIAN BARRIER	NYSDOT STANDARD
606.3041	SINGLE-SLOPE CONCRETE MEDIAN BARRIER (OPTIONAL)	NYSDOT STANDARD
606.3051	SINGLE-SLOPE CONCRETE MEIDAN BARRIER – WIDE (OPTIONAL)	NYSDOT STANDARD
606.3053	SINGLE-SLOPE CONCRETE MEDIAN BARRIER – EXTRA WIDE (CAST-IN-PLACE)	NYSDOT STANDARD
606.3061	SINGLE-SLOPE CONCRETE HALF SECTION BARRIER (OPTIONAL)	NYSDOT STANDARD
606.3062	SINGLE-SLOPE CONCRETE HALF SECTION BARRIER (PRECAST)	NYSDOT STANDARD
606.7201	REMOVING AND DISPOSING HPBO (MOD) CORRUGATED BEAM MEDIAN BARRIER	NYSDOT STANDARD
606.75	REMOVING AND DISPOSING CONCRETE MEDIAN BARRIER	NYSDOT STANDARD
606.751	REMOVING AND DISPOSING CONCRETE BARRIER - HALF SECTION	NYSDOT STANDARD
606.8906	TRANSITION HPBO (MOD) CORRUGATED BEAM MEDIAN BARRIER TO SINGLE SLOPE CONCRETE MEDIAN BARRIER	NYSDOT STANDARD
606.9001	TRANSITION BETWEEN STANDARD (NJ) CONCRETE BARRIER AND SINGLE-SLOPE CONCRETE BARRIER	NYSDOT STANDARD
606.9002	TRANSITION BETWEEN WIDE AND NORMAL SINGLE SLOPE CONCRETE MEDIAN BARRIER	NYSDOT STANDARD
606.9003	TRANSITION BETWEEN HALF SECTION AND FULL-SECTION SINGLE-SLOPE CONCRETE BARRIER	NYSDOT STANDARD
607.91120001	STEEL RAILING AND HANDRAIL	PIN APPROVED
608.0101	CONCRETE SIDEWALKS AND DRIVEWAYS	NYSDOT STANDARD
618.79ABCN15	SECURITY BOLLARD	NYSDOT STANDARD
619.70040011	PROTECTIVE SAFETY SHIELDING OVER HIGHWAY	SPECIAL SPEC
623.12	CRUSHED STONE (IN PLACE MEASURE)	NYSDOT STANDARD
644.11	ANCHOR BOLTS	NYSDOT STANDARD

ITEM NUMBER	SPECIFICATION NAME	SPECIFICATION TYPE
644.20	DRILLED SHAFT FOR OVERHEAD SIGN STRUCTURES	NYSDOT STANDARD
644.421220	TRUSSED ARM CANTILEVER SIGN STRUCTURE (12YD ARM, 20SY SIGN AREA)	NYSDOT STANDARD
644.421420	TRUSSED ARM CANTILEVER SIGN STRUCTURE (14YD ARM, 20SY AREA)	NYSDOT STANDARD
644.432560	SINGLE SPAN SIGN STRUCTURE (25YD SPAN, 60SY AREA)	NYSDOT STANDARD
644.434090	SINGLE SPAN SIGN STRUCTURE (40YD MAX SPAN, 90YD MAX AREA)	NYSDOT STANDARD
644.435090	SINGLE SPAN SIGN STRUCTURE (50YD MAX SPAN, 90YD MAX SIGN AREA)	NYSDOT STANDARD
645.62	OVERHEAD SIGN PANELS WITH HIGH-VISABILITY SHEETING	NYSDOT STANDARD
646.24	REFERENCE MARKER PANEL RELOCATION	NYSDOT STANDARD
647.21	REMOVAL OF SINGLE SPAN OVERHEAD SIGN PANEL(S), STRUCTURE, AND FOUNDATIONS	NYSDOT STANDARD
647.25	REMOVE AND DISPOSE OF BRIDGE-MOUNTED SIGN PANEL, SIGN PANEL ASSEMBLY	NYSDOT STANDARD
647.31	RELOCATE SIGN PANEL WITH ASSEMBLY SIZE 1 (UNDER 30SF)	NYSDOT STANDARD
656.01	MISCELLANEOUS METALS	NYSDOT STANDARD
670.0145	FOUNDATION FOR LIGHT STANDARDS 45FT LONG	NYSDOT STANDARD
698.05	FUEL PRICE ADJUSTMENT	NYSDOT STANDARD
698.06	STEEL/IRON PRICE ADJUSTMENT	NYSDOT STANDARD

PIN APPROVED SPECIFICATIONS ARE LOCATED IN THE NYSDOT PAY ITEM CATALOG: www.dot.ny.gov/pic

NYSDOT STANDARD SPECIFICATIONS ARE LOCATED ON THE NYSDOT WEBSITE: www.dot.ny.gov/main/business-center/engineering/specifications/updated-standard-specifications-us

Special specifications are located in Volume 3 of this Contract.

GENERAL

GENERAL SPECIAL SPECIFICATIONS

SANDRESM1

The specifications in the GENERAL-Pages provide requirements for construction management and execution of the Work.

The GENERAL-Pages supplement and modify the specifications shown on the Specifications and Standards of New York City sheet at the beginning of this Volume 3.

(NO TEXT ON THIS PAGE)

TABLE OF CONTENTS

Section **Page No.**

Table of Contents i

Section HW-900 – Allowance For Maximum Incentive For Early Completion/Liquidated Damages 1

Section HW-900H – Allowance for City Work Acceleration 5

Section 6.39 B – Mobilization 6

Section 6.40 CR – Engineer's Field Office 8

Section 6.52 FED – Uniformed Flagperson 15

Section ESCR 15 – Operation and Maintenance Data 18

Section HW-908 – Allowance for Extra Work Due to Archeological Discoveries 25

Section ESCR 9.30 – Stormwater Pollution Prevention 26

Section ESCR-5 – Construction and Demolition Waste Management 31

Section ESCR-6 - Conservation of Water and Energy 35

Section ESCR-7.13 WF1 – Maritime Load-Out Facility 37

Section ESCR-7.13WF2 – On-Site Waterfront Operations Facility 38

Section ESCR-10 – Air Quality Monitoring 42

Section ESCR-11 – Noise Monitoring 44

Section ESCR-HW-901 – Temporary Phasing Measures 46

(NO TEXT ON THIS PAGE)

SECTION HW-900 – ALLOWANCE FOR MAXIMUM INCENTIVE FOR EARLY COMPLETION/LIQUIDATED DAMAGES

HW-900.1 GENERAL.

Since Project SANDRESM1 is critical to coastal resiliency of Manhattan and TIME IS OF THE ESSENCE, the City is making available to the Contractor certain incentive payments. The incentive payment amount will be tied to an Accelerated Substantial Completion Date for this Capital Project. To earn an incentive payment amount, the Contractor must meet the Accelerated Substantial Completion Date for this Capital Project. Please be advised that in the event the Scheduled Substantial Completion Date for this Capital Project is extended by the Commissioner in accordance with **Article 13 "Extension Of Time For Performance"** of the Standard Construction Contract, the Accelerated Substantial Completion Date may be extended accordingly.

Any dispute, negotiation and/or any other cause resulting in a delay, whether caused by the City, the Utilities, or any other party, which results in the Contractor's failure to meet the Accelerated Substantial Completion Date as set forth in **Subsection HW-900.2**, will result in no payment of the entire incentive and the Contractor agrees that it shall not bring a claim against the City for the incentive payment. (See below for more details.)

The Contractor is a sophisticated business entity involved in the construction industry with access to legal representation and understands that by entering into this Contract with the City that the Contractor hereby waives any and all claims it may have against the City or any of its officials, employees or agencies for the Contractor failing to meet the Accelerated Substantial Completion Date and, thus not receiving any incentive payment available for this Capital Project. This includes any portion of the incentive payment, which the Contractor forfeits by failing to meet the Accelerated Substantial Completion Date. As a sophisticated business entity involved in the construction industry, the Contractor understands that it is possible that it may not receive any incentive under this Contract and that it cannot bring any claim or lawsuit in any jurisdiction against the City if it does not meet the Accelerated Substantial Completion Date for any reason and does not earn the incentive payment.

Furthermore, the Contractor will not have a claim against the City for a compensable delay under **Article 11** of the Standard Construction Contract, or any other claim against the City, if the City does not pay any incentive for this Capital Project because the Contractor did not meet the Accelerated Substantial Completion Date, and the Contractor's failure to meet such Accelerated Substantial Completion Date is due to a delay by the City or any City agency, any Utilities or any other cause whatsoever.

The early completion incentive is separate and distinct from **Article 11** of the Standard Construction Contract and the Contractor agrees and understands that the incentive payment cannot be claimed under **Article 11** of the Standard Construction Contract.

Moreover, the Contractor hereby waives any and all rights (and hereby understands what it is waiving as described herein) the Contractor may have or thinks it has in law (contract law or torts law) or in this Contract to bring any kind of claim against the City, if the City, based on this Contract, does not pay the incentive amount for this Capital Project for any reason.

HW-900.2 INCENTIVE/LIQUIDATED DAMAGES.

Timely completion of all work, excluding punchlist work, is essential to this project. In order to ensure such timely completion the City is providing incentive payment or, in the event that the

Contractor fails to meet the Scheduled Substantial Completion Date, liquidated damage assessment for this contract, as set forth below.

The Contractor shall be assessed liquidated damages, per **Article 15** of the Standard Construction Contract and as shown in Schedule "A", in the event the Contractor fails to substantially complete all work excluding punchlist work, within the time fixed for such completion in Schedule "A".

(1) General Provisions:

(a) Two (2) types of incentive payment amounts are available to the Contractor under this **Section HW-900.** The amounts are set forth below in **Paragraph (5)** of this **Subsection HW-900.2.**

(b) An incentive payment will be authorized to the Contractor only if all work of the contract including, but not limited to, all change order work for the contract, receives a determination of Substantial Completion, as defined in **Paragraph (7)** of this **Subsection HW-900.2**, below, by the Accelerated Substantial Completion Date, as defined in **Paragraph (3)** of this **Subsection HW-900.2**, below.

(c) No incentive will be authorized for the early completion of the contract in the event that substantial completion of the work of the contract occurs after the Accelerated Substantial Completion Date, regardless of delays, including delays attributable to the City. Examples of delays that may cause the Contractor to miss the Accelerated Substantial Completion Date and not earn the available incentive payment amounts include, without limitation, delays resulting from subsurface conditions at the site materially differing from any shown on the Contract Drawings or indicated in the Specifications, delays resulting from such subsurface conditions as could not reasonably have been anticipated by the Contractor and were not anticipated by the City, and delays due to private utilities, which conditions will materially affect the cost of the work to be done under the contract. Notwithstanding the above, the Commissioner may grant an extension of time in accordance with **Article 13** of the Standard Construction Contract for any or all of such delays.

(d) Liquidated damages will be assessed by the City against the Contractor if substantial completion of the work of the contract does not occur by the Scheduled Substantial Completion Date, plus authorized time extensions pursuant to **Article 13** of the Standard Construction Contract.

(e) The determination of incentive payment or liquidated damage assessment will be made solely by the Commissioner, and the Commissioner's decision with respect thereto shall be accepted as final, binding, and conclusive.

(2) Scheduled Substantial Completion Date: Both the scheduled commencement date and the Scheduled Substantial Completion Date, excluding punch list work, are to be set forth in the written Notice to Proceed to be issued by the Commissioner in accordance with **Article 8** of the Standard Construction Contract. The number of consecutive calendar days for determining the Scheduled Substantial Completion Date is set forth in Schedule "A".

(3) Accelerated Substantial Completion Date: The Accelerated Substantial Completion date is set at fifteen (15) calendar days before the Scheduled Substantial Completion Date, as defined in **Paragraph (2)** of this **Subsection HW-900.2**, above. The number of consecutive calendar days for determining the Accelerated Substantial Completion Date is 1811 from the scheduled commencement date set forth in the Notice to Proceed.

(4) Incentive and Liquidated Damages Payments:

(a) Incentive Payments:

(i) Potential Incentive Payment No. 1: If the Work of the contract including, but not limited to, all change order work, receives a determination of Substantial Completion, as defined in **Paragraph (7)** of this **Subsection HW-900.2**, below, prior to the Accelerated Substantial Completion Date, as defined in **Paragraph (3)** of this **Subsection HW-900.2**, above, plus authorized time extensions under **Article 13** of the Standard Construction Contract, then the City, will authorize Incentive Payment No. 1 to the Contractor in accordance with **Paragraph (5)** of this **Subsection HW-900.2**, below, less any and all deductions authorized by this contract or by law.

(b) Liquidated Damages: Should substantial completion of the work of the contract, as defined in **Paragraph (7)** of this **Subsection HW-900.2**, below, occur after the Scheduled Substantial Completion Date set for the contract, as defined in **Paragraph (2)** of this **Subsection HW-900.2**, above, plus authorized time extensions pursuant to **Article 13** of the Standard Construction Contract, or, if the Contractor, in the sole determination of the Commissioner, should abandon the work, the City will assess liquidated damages against the Contractor in an amount determined as follows: the liquidated damage amount for the contract as stated in **Paragraph (5)** of this **Subsection HW-900.2**, below, multiplied by the number of calendar days in which substantial completion of the work occurs after the Scheduled Substantial Completion Date set for the contract, plus authorized extensions; which said sum, in view of the difficulty of accurately ascertaining the loss which the City will suffer by reason of delay in the completion of the work hereunder, is hereby fixed and agreed as the liquidated damages that the City will suffer by reason of such delay, and not as a penalty.

This article shall also apply to the Contractor if it is defaulted pursuant to **Chapter X** of this Standard Construction Contract. Neither the failure to assess liquidated damages nor the granting of any time extension shall operate as a waiver or release of any claim the City may have against the Contractor for either actual or liquidated damages.

(c) Calculation: For the purposes of calculating the number of calendar days for incentive payment, such calculation shall include the day on which the Substantial Completion of the contract occurs.

For the purposes of calculating the number of calendar days for liquidated damage assessment, such calculation shall not include the day of Scheduled Substantial Completion of the contract.

(5) Incentive/Liquidated Damage Amounts:

(a) Incentive Amounts:

(i) Potential Incentive Payment No. 1: For early substantial completion of the contract before the Accelerated Substantial Completion Date as defined in **Paragraph (3)** of this **Subsection HW-900.2**, the additional incentive payment is equal to $30,000.00 per day for a maximum of one hundred and fifty (150) days before the Accelerated Substantial Completion Date ($4,500,000.00 maximum additional incentive).

(b) Liquidated Damage Amount: $30,000.00 per day for the contract, for a maximum of one hundred and fifty (150) days after the Substantial Completion Date ($4,500,000.00 maximum liquidated damage).

(6) Maximum Incentive/Liquidated Damage Amounts:

(a) Maximum Incentive Payment: The maximum incentive amounts payable to the Contractor shall equal the incentive amounts indicated in **Paragraph (5)** of this **Subsection HW-900.2**, above, as follows:

$30,000.00/day x 150 days = $4,500,000.00

(b) Liquidated Damage: The maximum liquidated damage amounts assessed to the Contractor shall equal the liquidated damage amounts indicated in **Paragraph (5)** of this **Subsection HW-900.2**, above, as follows:

$30,000.00/day x 150 days = $4,500,000.00

(7) Substantial Completion: Construction within the contract shall be substantially complete when, in the sole determination of the Commissioner, all work, exclusive landscaping and punch list work, has been completed, tested, made operational, and accepted by the Engineer.

HW-900.3 BASIS OF PAYMENT.

Payment for any incentives earned by the Contractor under this Capital Projects shall be made in accordance with the applicable **Subsection HW-900.2.(4)(a)** above.

The total estimated cost of this item is the “fixed sum” amount shown for this item in the Bid Schedule. No guarantee is given that the actual lump sum cost for this item will in fact be the “fixed sum” amount. The “fixed sum” amount is included in the total bid solely to ensure that sufficient monies will be available to pay any incentives earned by the Contractor.

The “fixed sum” is for bidding purposes only and shall not be varied in the bid. The Contractor will be paid for the actual amount of any incentives earned, less any and all deductions authorized by this contract or by law, regardless of the fixed sum.

Payment will be made under:

Item No.	Item Description	Pay Unit
HW-900	ALLOWANCE FOR MAXIMUM INCENTIVE FOR EARLY COMPLETION	F.S.

SECTION HW-900H – ALLOWANCE FOR CITY WORK ACCELERATION

Under this Section, the Contractor will be paid for City work deemed necessary by DDC's Commissioner to accelerate the City work items in the project during critical periods but the use of this item will expire on the original contract substantial completion date. Such accelerated City work includes:

A. 100% of the premium portions of overtime pay for working during non-scheduled work hours which must be defined as those hours of work outside the permissible hours stated in the original contract OCMC Traffic Stipulations; or,

B. The premium portion of overtime pay for overtime actually worked beyond the 40-hour work week but within the permissible hours of work stated in the original contract OCMC Traffic Stipulations; or,

C. All other incidental expenditures caused by modifications of project site regulations or administrative requirements ordered by the Commissioner that result in additional costs to perform contract work as specified.

Such accelerated City work must be paid for under this item in accordance with the requirements of **Articles 25 and 26** of the Standard Construction Contract.

Payment made under this Fixed Sum item must cover the cost of all labor, materials, plant, equipment, insurance, and incidentals necessary to accelerate the City work as ordered by DDC's Commissioner.

No guarantee is given that this allowance item will in fact be required in this contract. The estimated "fixed sum" amount shown in the Bid Schedule is included in the total bid solely to insure a method of payment for any accelerated work performed by the Contractor, as directed by DDC's Commissioner.

Payment will be made under:

Item No.	Item	Pay Unit
HW-900H	ALLOWANCE FOR CITY WORK ACCELERATION	F.S.

SECTION 6.39 B – MOBILIZATION

6.39.1. DESCRIPTION. Under this section, the Contractor must set up all necessary general plant and facilities, including shops, storage areas, office and such sanitary and other facilities as are required by City, State or Federal law or regulation. Unless otherwise provided, the cost of required bonds and/or any other similar significant initial expenses required for the initiation of the contract work must also be included in this section. The determination of the adequacy of Contractor's facilities, except as noted above, will be made by the Engineer.

6.39.2. MATERIALS. Unless otherwise specified, materials required under this section are not part of the completed contract and may be as selected by the Contractor.

6.39.3. CONSTRUCTION METHODS. Such work as is done in providing the facilities and services under this section must be done in a safe and workmanlike manner and must conform with any pertinent City, State or Federal law, regulation or code. The Contractor must provide facilities and services under this section that are planned and executed to ensure the maintenance of safety and good housekeeping at the construction site.

6.39.4. PRICE TO COVER.

Payment will be made by lump sum. The amount bid will include the furnishing and maintaining of any plant, services or other facilities noted under "Description" to the extent and at the time the Contractor deems them necessary for the Contractor's operations, consistent with the requirements of this section and the contract. The amount bid for this lump sum item will be payable to the Contractor when the following items are submitted and approved by the Engineer:

1. The provision of a Field Office per Section 6.40 CR;

2. The Site Safety Plan per the Safety Requirements section of the Information for Bidders;

3. The Preliminary CPM Schedule and Baseline CPM Schedule per the "CRITICAL PATH METHOD (CPM) SCHEDULE" article in the S-Pages;

4. The Progress Schedule per Standard Construction Contract Article 9;

5. Preconstruction Photographs per Section 6.43 D of the NYCDOT Standard Highway Specifications are submitted to the Engineer; and

6. Construction Report per Item ESCR-76.11CR.

However, should the Contract be terminated, or its term expires prior to completion of at least fifty percent (50%) of the original price bid for the Contract, then the Contractor will be paid a proportionate amount of this item (hereinafter referred to as the "Adjusted Mobilization Payment") based on the following formula:

$$\text{Adjusted Mobilization Payment} = \text{As Bid Mobilization Cost} \times \frac{\text{Total Actual Payments to the Contractor approved by the Engineer}}{\text{Original Total Bid Price + Approved and Registered Change Orders}}$$

Where the Contractor has already received the original total payment for this item and the Contract has been terminated or expired prior to completion of at least fifty percent (50%) of the work covered under the original price bid for the Contract, then any monies owed by the City due to the above specified reduction in payment will be withheld from the monies the City owes to the Contractor and/or the City reserves a claim to such funds from the Contractor.

The amount bid for Mobilization must not exceed eight percent (8%) of the total contract price, excluding the price bid for Mobilization, and in no case will payment under this item exceed the original price bid for this item.

Payment will be made under:

Item No.	Item	Pay Unit
6.39 B	MOBILIZATION	L.S.

SECTION 6.40 CR – ENGINEER'S FIELD OFFICE

1.0 DESCRIPTION

The Contractor shall provide, furnish and maintain a fully equipped field office for the exclusive use of and occupancy by the Department's engineering personnel and/or Supervising Consultant (herein after called "City personnel"), and by the engineering personnel of private utilities when specified. The field office shall be at a location approved by the Engineer and shall be a commercial building, store front, or with the approval of both Office of Construction Mitigation and Coordination (OCMC) and the Community Board it may be a mobile trailer(s). If a trailer is used it shall be subject to approval by the Engineer, and all necessary permits shall be obtained by the Contractor. The Contractor may have facilities in an adjoining area separated by a lockable door, provided such facilities are in a location approved by the Engineer. It is preferred that the field office be within ½ mile of the job site, at a location approved by the Engineer. Field offices located more than ½ mile from the job site shall require approval by the Engineer.

The field office structure and occupancy thereof shall conform to the requirements of all laws, rules, regulations and orders applicable to it.

The field office and all equipment, except as otherwise specified, may be new materials or may be used materials in good condition and satisfactory to the Engineer.

2.0 MATERIALS

2.0.1 General Construction

The Engineer's Field Office shall be in an approved and weatherproof building. It shall have a minimum ceiling height of seven (7') feet and be partitioned to provide the number of rooms required for the type of office specified. Floor space shall be subdivided into work areas based on a floor plan provided by the City to the Contractor upon notification of space availability.

2.0.2 General Facilities

The field office shall contain or have the following facilities incorporated:

1. Lighting – Electric light, non-glare type luminaries to provide a minimum illumination level of 100 ft.- candles at desk height level.

2. Heating and Cooling – Adequate equipment to maintain an ambient air temperature of 70° F. ±5°.

3. Electrical Energy Outlets– In accordance with all applicable codes and placed as necessary.

4. Toilet – A separate enclosed room, properly ventilated per code and complying with applicable sanitary codes shall contain a lavatory with running hot and cold water, flush-type toilet**,** mirror, electric hand dryer, and paper towel dispenser.

5. Potable Water – Potable water supplied from an existing system or five (5) gallon capacity water cooler of a type to be approved by the Engineer shall be provided for use by City personnel. Replacement bottles of water shall be provided by the Contractor, when required.

6. Signs – Store front locations shall have a window graphic sign in black and white lettering with the following inscription. Other locations shall have a wood or metal sign affixed on the outside wall of the building with the following inscription painted in black block lettering on a white background. Paints shall be approved exterior enamels.

CITY OF NEW YORK	2-1/2”
DEPARTMENT OF DESIGN AND CONSTRUCTION	3-1/2”
INFRASTRUCTURE	2-1/2”
RESIDENT ENGINEER’S FIELD OFFICE	2-1/2”

7. Electric Refrigerator – five (5) cubic feet minimum capacity for use by City personnel.

8. Microwave, Toaster Oven and Coffee Maker – Basic reheating kitchen equipment or approved appliances for use by City personnel.

9. Windows and Doors – All windows and doors shall be weatherproof and each equipped with adequate locking devices. Each window shall be equipped with vertical blinds. Exterior doors shall be provided with two (2) separate “high security” dead bolt type cylinder locks, keyed alike, and three (3) keys shall be furnished for each lock. All windows and doors shall be alarmed with an audible alarm system with signals sent to a 24-hour security response service.

10. Partitions – Partitions for work space enclosures shall be either permanent walls or of the modular type similar to Herman Miller’s standard fabric covered line.

11. Kitchen Sink – Mechanism to provide non-drinking, hot and cold, running water.

2.0.3 Office Equipment

1. Pencil Sharpener – One standard pencil sharpener for use by City personnel.

2. Telephone Answering Machine – The telephone answering machine to be provided shall be an electronic digital voice machine with emergency call forwarding capability. It shall be operable twenty-four (24) hours per day and, when unattended, shall transmit to the caller the dolling message:

   “You have reached the Field Office of the New York City Dept. of Design and Construction. No one is here now. We check our incoming messages frequently. We will get back to you as soon as possible. Please leave your name, message and phone number where you may be reached. In case of emergency, call the New York City Hotline at 311. Again, the emergency number is 311.”

   All electronic voicemail messages shall be automatically forwarded as email attachments, to allow for the voicemails to be played remotely.

2.0.3.1 Computer Equipment

Computers furnished by the Contractor for use by City Personnel, for the duration of the contract, shall be in accordance with Table 1 - ADDITIONAL SPECIFIC REQUIREMENTS, contained herein, and shall meet the following minimum requirements:

Personal Computer(s) – Workstation Configuration

1. Make and Model: Dell; HP; Gateway; Acer; or, an approved equivalent. (Note: an approved equivalent requires written approval of the Assistant Commissioner of ITS.)
2. Processor: i5 (4MB Cache, 3.0GHz) or faster computer - Dual Processor.
3. System Ram: Minimum of 16GB (Gigabytes) Dual Channel DDR3 SDRAM at 1333MHz – 2 DIMMSs
4. Hard Disk Drive(s): 500 GB (Gigabytes) Serial ATA (7200RPM) w/DataBurst Cache, or larger.
5. CD-RW: Internal CD-RW, 48x Speed or faster.
6. 16X DVD+/-RW: DVD Burner (with double layer write capability) 16x Speed or faster
7. I/O Ports: Must have at least one (1) Serial Port, one (1) Parallel Port and three (3) USB Ports.
8. Video Display Card: HD Graphics (VGA, HDMI) with a minimum of 64 MB of RAM.

9. Monitor: 22" W, 23.0 Inch VIS, Widescreen, VGA/DVI LCD Monitor.
10. Available Exp. Slots: System as configured above shall have at least two (2) full size PCI Slots available.
11. Network Interface: Integrated 10/100/1000 Ethernet card.
12. Other Peripherals: Optical scroll Mouse, 101 Key Keyboard, Mouse Pad and all necessary cables.
13. Software Requirements: Microsoft Windows 10 Professional SP1, 32 bit or 64 bit; Microsoft Office Professional 365; Microsoft Project 365; Basic Adobe Acrobat Package; Anti-Virus software package with 4 year updates subscription; and, either Auto Cad LT or Microsoft Visio Standard Edition, as directed by the Engineer.

All field offices requiring computers shall be provided with the following:

1. One (1) broad-band internet service account. Wideband Internet connectivity at a minimum throughput of 15 Mbps download and 50 Mbps upload is required. Telephone service should be bundled together with Internet connectivity. Because of throughput requirements Verizon FIOS is the preferred connectivity provider where available.
   This account will be active for the life of the project. The e-mail name for the account shall be the DDC Field Office/project Id (preferably Gmail or Outlook - e.g., SANDRESM1@gmail.com).

2. All necessary Cabling.

3. Storage Boxes for and Blank CDs/DVDs.

4. UPS/Surge Suppressor combo.

5. 30 USB Thumb (or flash) Drives – 16 GB each

All computers required for use in the Engineer's Field Office shall be delivered, installed, and setup in the Field Office by the Contractor.

All Computer Hardware shall come with a three (3) year warranty for on- site repair or replacement. Additionally, and notwithstanding any terms of the warranty to the contrary, the Contractor is responsible for rectifying all computer problems or equipment failures within one (1) business day.

An adequate supply of blank CDs/DVDs, and paper and toner cartridges for the printer shall be provided by the Contractor and shall be replenished by the Contractor as required by the Engineer.

It is the Contractor's responsibility to ensure that electrical service and phone connections are also available at all times; that is, the Field Office Computer(s) is to be powered and turned on twenty-four (24) hours each day.

Broadband connectivity is preferred at each field office location. Please take into consideration that an extra phone line dedicated to the modem must be ordered as part of the contract unless Internet broadband connectivity, via Cable or DSL, is available at the planned field office location. Any questions regarding this policy should be directed to the Assistant Commissioner of Information Technology Services at 718-391-1761.

2.0.3.2 Data Access

Electronic access to the EquipmentWatch Retail Rental Rates database (formerly known as The AED Green Book published by Equipment Watch), shall be provided.

2.0.4 Field Testing Equipment

1. 2 – Air Entrainment Meters – Pressure Type, with carrying case for use by City personnel. Each meter shall be capable of producing an accurate test result in approximately five (5) minutes and shall comply with ASTM Designation C 231.

2. 2 – Slump Test Sets – Slump cone and test sets conforming to the requirements of ASTM Designation C 143, complete with rod and scoop for use by City personnel.

3. Thermometers: For use by City personnel.

   - 1 – Minimum-maximum thermometer.
   - 3 – Asphalt thermometers of stainless steel construction with an accuracy of 0.5% of the full scale, able to measure temperatures from 50 to 500 degrees F. in 5 degree increments.
   - 3 – Surface Thermometers able to measure temperatures of flat surfaces similar to Sargent-Welsh Model S81441-D, or an approved equivalent.

4. Nonsparking Pinch Bar – For use in opening manholes.

5. Gas Meters – For use in detecting the presence of explosive gases and vapors for use by City personnel.

6. Straight Edge – One 10 foot long straight edge for use by City personnel in detecting pavement surface tolerance.

7. 48" Smart Level – For use in determining pedestrian ramp and sidewalk slopes.

8. Chlorine Test Kits – For testing residual chlorine levels following water main flushing.

9. Green Florescent Power Trace Dye – For testing sewer connections.

10. 10 – One Million Candlepower Rechargeable Flashlights.

11. Distance Measuring Wheel – For measuring long distances.

3.0 SPECIFIC REQUIREMENTS FOR ENGINEER'S FIELD OFFICE

In addition to the general requirements, the Field Office shall have a minimum floor area of 12,000 SF, calculated based on usable area only, excluding any loss factors. Loss factors are defined as those areas such as lobby, sidewalk, window ledge, elevator shafts, and stairways. The Contractor shall provide and maintain furnishings for each type of Field Office in the quantity specified in Table 1. The furnishings shall be new or used equipment satisfactory to the Engineer.

The office shall have a minimum of two outside doors and four windows.

The Field Office shall be partitioned to provide thirty-five (35) rooms, one of which shall be at least 150 s.f. in area (for use by private utilities).

TABLE 1
ADDITIONAL SPECIFIC REQUIREMENTS

SPECIFIC REQUIREMENTS	TYPE CR
Minimum useable floor space (Square Feet) †	12,000
Office desks, at least 4'-8" x 2'-8", with drawers, locks, and keys.	50*
Swivel chairs, with arms, for the above.	50*
Office folding chairs, metal, with padded seats and backs.	20**
Steel supply cabinets (approximate size 72" high by 36" wide by 18" deep), with four adjustable shelves, tumbler lock and 3 keys.	3
Fire resistant cabinet, 4-drawer, legal size with lock and three (3) keys, meeting the requirements for "Filing devices, Insulated (36 E 9)" Class D Label, of the Underwriters' Laboratories, Inc. Specifications.	6***
Individual lockers (17" wide x 18" deep x 72" high) with flat key locks and two (2) keys each.	10
Calculating machines, tape type with digital display registering at least ten (10) digits.	50*
Standalone networked color laser printer carriage, standard 16	1
Waste paper baskets (metal, approximately 12" square by 16" high).	15
Fire extinguishers, non-toxic, dry chemical type meeting Underwriters Laboratories, Inc., approval for Class A, Class B and Class C fires with a minimum rating of 2A:lOB:10C.	3****
First Aid Kit kept properly stocked with appropriate first aid supplies at all times.	2
Drafting tables (3'-0" x 5'-0") with storage drawers and stool.	5****
Photocopying Machine – Stand-alone, heavy duty, electric, dry-process color photocopying type with color scan and send capability via e-mail, a minimum production rate of 70 pages per minute and an adequate supply of copy paper, toner, etc. The machine shall be capable of duplex copying paper sizes of 8-1/2 x 11 inches, 8-1/2 x 14 inches and 11 x 17 inches, and have separate trays for each paper size. It shall have a document feeder, collator, stapler, and the capability to reduce/enlarge copies between each paper size. The supply of each size copy paper, toner, etc. shall be replenished and the machines shall be maintained for the duration of the contract by the Contractor as required by the Engineer. Make and model can be Minolta, Canon, IBM, Epson, or an approved equivalent, and shall be networked to the office computers for printing capability.	3
Standalone networked color laser printer. (Not required if photocopying machine prints in color)	1
Vertical filing plan racks for six sets of 22"x36" plans each rack.	7****
Telephone lines for calls with no territorial limitation including international calling, where one shall be dedicated for the Fax Machine, one for each computer fax/modem and the others for telephone instruments.	20‡
Telephone instruments.	50
Telephone answering machine.	1
Fax Machine – With an adequate supply of copy paper, toner, etc. The supply of copy paper, toner, etc. shall be replenished and the machines shall be maintained for the duration of the contract by the Contractor as required by the Engineer.	1
Personal Computer – Workstation Configuration	50

Bottled water with refrigerator unit-hot/cold water. (For private utilities room.)	1
Heavy duty commercial grade diamond cut shredder with automatic start. The shredder shall be able to receive 8-1/2 inch wide paper and shred a minimum of 15 sheets simultaneously along with CDs and staples.	1
Projector – 1080p LCD with a min. of 2200 ANSI Lumens, 1920 x 1080, 16:9, 40,000:1 contrast ratio, HDMI, VGA, USB, and a 10' diagonal, 16:9 Projection Screen.	1
Conference Room, 320 square foot (20'x16' minimum, equipped with (2) 3'x6.5' tables and (30) chairs.	1
Drawing Plotter – networked (wireless) plotter. Capable to print, copy, and scan sheet sizes between 8.5"x11" and 36"x48". Ink types to be Dye-based (C, M, Y, pK, G); Pigment-based (mK). The machine shall have print speed of 180 D/hr, 19.3 sec/D, 3D/min^2 with wake-up time less than 10 sec; scan speed up to 3in/sec color, 200 dpi, up to 10 in/sec grayscale, 200 dpi; Copy up to 6 in/sec color, 200 dpi, up to 10 in/sec grayscale, 200 dpi. Print resolution to be up to 2400 X 1200 optimized dpi and scan (sheetfed) resolution up to 600 dpi. The machine shall have memory capacity of 128 GB or higher file processing and hard drive capacity of 500 GB or higher. The machine shall be capable of direct print from USB flash drive, print from network shared folder and email printing. Scan format to be JPEG, TIFF and multipage TIFF, PDF and multipage PDF; shell be capable of scan directly to USB, shared network folder, printer HDD and email.	1

‡ *Provide one (1) telephone line and two (2) telephone instruments for the exclusive use by private utilities personnel. The line shall interconnect the two telephone instruments by push button control.*
* *Provide four (4) each of Office Desks, Swivel Chairs and Waste Paper Baskets in private utilities room.*
** *Provide eight (8) Folding Chairs in private utilities room.*
*** *Provide two (2) Fire Resistant 4-Drawer Legal Size Cabinets in private utilities room.*
**** *Provide one (1) each of Fire Extinguisher, Drafting Table and Vertical File Rack in private utilities room.*

3.0.1 Construction Methods

The building shall be fully equipped and made available for use and occupancy by the Department's personnel and/or Supervision Consultant not less than thirty (30) days prior to the start of any contract work.

The building interior (including access foyers, stairwells, etc.) shall be maintained in good, clean, and sanitary working condition by the Contractor for the duration of the contract. The Contractor shall provide and pay all costs for electrical service, telephone service for calls within New York City limits, hot and cold water, heat and fuel, and daily janitor service. Staples, such as paper towels, hand soap, toilet paper, and similar supplies, shall always be available.

Where necessary, the site for a mobile trailer(s) shall be graded and shoulder stone placed and maintained as directed by the Engineer to provide a parking area for City personnel and, if necessary, an approach road shall be provided. Plumbing work shall include all water supply, drainage and piping required for the operation of a complete installation. Temporary water service shall be provided from an existing main and extended into the trailer and all fixtures requiring water supply shall be properly connected up. All necessary soil, waste, vent and drainage piping shall be provided and connected to the existing sewer or as otherwise directed.

The office, incorporated facilities, equipment, and personal property of the Department's employees shall be protected by the Contractor against loss or damage from fire, theft, or other causes, at all hours of the day and night. The Contractor shall provide fire insurance, extended coverage and vandalism, malicious

mischief and burglary, and theft insurance coverage in the amount of forty thousand dollars ($40,000.00) for office equipment of the City of New York in the Engineer's field office and for property of City personnel that is used in the contract work and stored in the office. All insurance coverage shall be written by a company approved by the Commissioner and payable in case of loss to the City of New York. The office shall be maintained by the Contractor in first class condition until final acceptance of the work.

At the direction of the Engineer, any equipment on the above lists may be deleted. The Engineer may direct that other equipment of equivalent value be supplied by the Contractor or an appropriate credit be taken for the value of equipment not provided.

When directed by the Engineer, the Contractor shall disconnect all services and remove and dispose of all temporary installations from the site, including fencing, surfacing and utilities, the area shall then be cleaned, loamed and seeded if required and left in a neat and acceptable condition. On and after the date of the Engineer's Final Acceptance, the temporary structure and all installed equipment shall become the property of the Contractor, and shall be disposed of, by the Contractor, away from the site of the work. Engineer's Final Acceptance shall be when the Contractor has completed all punch list work and Official Completion Date has been set.

4.0 NON-CONFORMANCE

No payment will be made under Engineer's Field Office for each calendar day during which there are deficiencies in compliance with the requirements of any subsection of this specification. The first calendar day shall commence twenty-four (24) hours after notice to the Contractor of such a deficiency. This non-payment shall be deducted from the Contractor's next estimate as a charge to the Contractor on the item. The amount of such calendar day non-payment will be determined by dividing the unit price bid per month by 30.

In addition, the Contractor may be subject to liquidated damages in accordance with Schedule A.

5.0 MEASUREMENT

The quantity to be measured for payment under this item shall be the number of months that the Field Office is available for occupancy by the Field Engineers during the period of the contract. Payment will begin the first month that the office is fully equipped and accepted, serviced as specified, and made available for occupancy. The Field Office is to be continuously made available and Monthly payments will continue for the duration of the contract through a period not to exceed 6 months past the substantial completion date. When directed in writing by the Commissioner, the Field Office will be provided and paid for a period of time beyond 6 months past the substantial completion date. Payment for each month's occupancy after the date of substantial completion acceptance will be made as part of the final estimate. Monthly payments may be terminated on a specified date prior to acceptance of the contract by written notification by the Engineer that such office will no longer be required on the contract.

6.0 PRICE TO COVER

The unit price bid per month for the item Engineer's Field Office shall include the cost of furnishing all labor, materials, equipment, ground rental, fire and theft insurance, and utility charges necessary to complete the work of providing or constructing the field office; making all necessary electrical, water, sewer, and other connections required to make the above facilities operative; payment of all rental costs; furnishing and paying for heating fuel, as required; all electrical energy; private telephone services; staples, as specified; and all necessary incidentals to complete the work - all in accordance with the specifications and the directions of the Engineer.

Payment will be made under:

Item No.	Item	Pay Unit
6.40 CR	ENGINEER'S FIELD OFFICE (COASTAL RESILIENCY)	MONTH

SECTION 6.52 FED – UNIFORMED FLAGPERSON

6.52FED.1. INTENT. This section describes the employment of uniformed flagpersons to direct and detour traffic.

6.52FED.2. DESCRIPTION. The Contractor must furnish an adequate number of flagpersons to control vehicular and pedestrian traffic when it is necessary to maintain alternating one-way traffic in one lane of a two-way roadway, and at all other locations where construction operations, construction vehicles and equipment, detours, and temporary traffic patterns related to the construction operations require positive temporary traffic control for safe, efficient traffic operations.

6.52FED.3. METHODS. All flagpersons must be English speaking and adequately trained and certified in flagging operations by a recognized training program such as that provided by the American Traffic Safety Services Association, the National Safety Council, unions or construction industry associations, or by an individual who holds a current certification as a flagger training instructor from such a program.

All flagpersons, their apparel, hand-signaling devices, active two-way radios, and procedures to be used by them must be in compliance with the requirements of Chapter 6E. FLAGGER CONTROL, in the Federal "U.S. Department of Transportation, Federal Highway Administration, "Manual on Uniform Traffic Control Devices for Streets and Highways" current edition.

Prior to the start of flagging operations, the Contractor must provide to the Engineer a list of certified flagpersons to be used in the contract, identifying the source of flagger training for each individual. When requested by the Engineer, flagpersons must demonstrate their competency in flagging procedures. Flagpersons not competent in flagging procedures to the satisfaction of the Engineer must be retrained or replaced at once.

The Contractor will be given a minimum of 12 hours advance notice by the Engineer as to when to furnish a flagperson.

6.52FED.4. METHOD OF MEASUREMENT. The fixed price lump sum shown in the bid proposal for this item will be considered the price bid, although actual payment will be based on the authorized work performed by the Uniformed Flagpersons. The fixed sum is not to be altered in any manner by the bidder.

It is agreed that the quantity to be measured for payment will be the number of person-hours of uniformed flagperson service actually performed, as authorized by the Engineer.

Laborers who are not certified uniformed flagpersons will not be measured for payment as flagperson under this item.

6.52FED.5. BASIS OF PAYMENT. The Contract price for this item will be a lump sum price for the work performed under this item and will be equal to the total sum of the amount of allowed wages paid for all authorized Uniformed Flagpersons performing vehicular and pedestrian traffic management.

The amount to be paid per person-hour will be calculated as follows:

For the Entity directly employing the flagperson:	
Wages & Benefits:	The hourly rates for wages & benefits ("supplemental") will be the rates listed in the prevailing wage schedule for Laborers *(Notes 1, 2)*.
Worker's Compensation Insurance:	Worker's Compensation Insurance will be paid for at cost, subject to the provisions of Article 26.2.9 of the Standard Construction Contract.
Taxes:	Applicable payroll taxes will be paid for at the appropriate cost.
Overhead & Profit:	12% overhead markup and 10% profit markup will be applied to the wage & benefit amounts. 5% combined overhead & profit markup will be applied to the Worker's Compensation Insurance amount. 0% overhead or profit markup on the premium portion of overtime wages. 0% overhead or profit markup on payroll taxes.

For the Contractor only, if the Entity directly employing the flagperson is a subcontractor:	
Overhead & Profit:	5% overhead and profit on subcontractor amounts as calculated above.

Note 1: If the contract has multiple prevailing wage schedules (e.g., NYC Comptroller Section 220 prevailing wage schedule or Federal Davis Bacon prevailing wage schedule) with different Laborer wage & benefit rates, the higher wage & benefit rates will be used. The Laborer rates appropriate for the type of work being performed will be used.
Note 2: The prevailing wages & benefits in effect at the time of work will be used.

Overhead will include without limitation, all costs and expenses in connection with administration, management superintendence, and all material costs for their apparel, hand-signaling devices, active two-way radios, and any other equipment required, and insurance required by Schedule A of the General Conditions other than Workers' Compensation Insurance.

The Contactor must submit to the Engineer satisfactory evidence of payment on certified payroll forms published by the Comptroller of the City of New York. No retainage will be withheld by the Department on such payments made under this section.

The total estimated cost of this item is the "fixed sum" amount shown for this item in the Bid Schedule. No guarantee is given that the actual total cost for this item will in fact be the "fixed sum" amount. The "fixed sum" amount is included in the total bid solely to ensure that sufficient monies will be available to pay the Contractor for these services.

The "fixed sum" is for bidding purposes only and must not be varied in the bid. The Contractor will be paid for the actual amount regardless of the fixed sum, which may be more or less than the fixed sum amount.

The Contractor must maintain separate books of accounts and must not charge any portion of the wages and benefits for Uniformed Flagpersons to another part of the work. Payment and partial payments under this item will be treated separately from the rest of the contract items.

The Comptroller's certified payroll report forms must be completed on a weekly basis and submitted to the Engineer every thirty days or whenever a payment requisition is submitted in less than thirty days. The Contractor must submit signed original daily sign-in sheets and any required daily reports, as required under this contract or directed by the Engineer.

Payment will be made under:

Item No.	Item	Pay Unit
6.52 FED	UNIFORMED FLAGPERSON	FIXED SUM

SECTION ESCR 15 – OPERATION AND MAINTENANCE DATA

1.1 MEASUREMENT AND PAYMENT

No separate measurement or payment will be made for submittal requirements as specified herein. Payment for the work covered under this section shall be distributed throughout the existing bid items. Payment for materials incorporated in the work will not be made if required approval has not been obtained.

1.2 SUBMISSION OF OPERATION AND MAINTENANCE DATA

Submit Operation and Maintenance (O&M) Data specifically applicable to this contract and a complete and concise depiction of the provided equipment, product, or system, stressing and enhancing the importance of system interactions, troubleshooting, and long-term preventative maintenance and operation. The Contractor shall prepare O&M instructions including component data from subcontractors and deliver to the Engineer prior to the training of maintenance personnel. The Contractor shall compile and prepare aggregate O&M data including clarifying and updating the original sequences of operation to as-built conditions. Organize and present information in sufficient detail to clearly explain O&M requirements at the system, equipment, component, and subassembly level. Include an index preceding each submittal.

1.2.1 Package Quality

Documents must be fully legible. Poor quality copies and material with hole punches obliterating the text or drawings will not be accepted.

1.2.2 Package Content

Data package content shall be as shown in the Section 1.4 titled "Schedule of Operation and Maintenance Data Packages." Comply with the data package requirements specified in Section 1.4, including the content of the packages and addressing each product, component, and system designated for data package submission.

1.2.3 Changes to Submittals

Manufacturer-originated changes or revisions to submitted data shall be furnished by the Contractor if a component of an item is so affected subsequent to acceptance of the O&M Data. Changes, additions, or revisions required by the Engineer for final acceptance of submitted data, shall be submitted by the Contractor within 30 calendar days of the notification of this change requirement.

1.2.4 Review and Approval

The Engineer shall review the gate Systems and equipment submittals for completeness and applicability. The Engineer shall verify that the systems and equipment provided meet the requirements of the Contract documents and design intent, particularly as they relate to functionality, energy performance, water performance, maintainability, sustainability, system cost, and local environmental impacts.

1.2.5 O&M Database

The Contractor shall develop a database that contains the information required to start a preventative maintenance program for all components in accordance with manufacturer instructions.

1.3 TYPES OF INFORMATION REQUIRED IN O&M DATA PACKAGES

1.3.1 Operating Instructions

Include specific instructions, procedures, and illustrations for the following phases of operation for the installed model and features of each system:

1.4.1.1 Safety Precautions

List personnel hazards and equipment or product safety precautions for all operating conditions.

1.4.1.2 Operator Prestart

Include procedures required to install, set up, and prepare each system for use.

1.4.1.3 Startup, Shutdown, and Post-Shutdown Procedures

Provide narrative description for Startup, Shutdown and Post-shutdown operating procedures including the control sequence for each procedure.

1.4.1.4 Normal Operations

Provide narrative description of normal operating procedures. Include Control Diagrams where applicable with data to explain operation and control of systems and specific equipment.

1.4.1.5 Alternative Operations

Provide narrative description of alternative operating procedures. Include Control Diagrams where applicable with data to explain alternative operation and control of systems and specific equipment.

1.4.1.6 Labeling

Labeling of key parts, lubrication points, and direction of rotation for all equipment shall be provided by the Contractor.

1.4.1.7 Operator Service Requirements

Include instructions for services to be performed by the operator such as lubrication, adjustment, and inspection.

1.4.1.8 Environmental Conditions

Include a list of Environmental Conditions (temperature, humidity, and other relevant data) that are best suited for the operation of each product, component, or system. Describe conditions under which the item or equipment should not be allowed to operate.

1.3.2 Preventative Maintenance

Include the following information for preventive and scheduled maintenance to minimize corrective maintenance and repair for the installed model and features of each system. Include potential environmental impacts of recommended maintenance procedures and materials.

1.3.2.1 Lubrication Data

Include preventative maintenance lubrication data, in addition to instructions for lubrication provided under Subsection 1.4.1.7 titled "Operator Service Requirements":

a. A table showing recommended lubricants for specific temperature ranges and applications.
b. Charts with a schematic diagram of the equipment showing lubrication points, recommended types and grades of lubricants, and capacities.

c. A Lubrication Schedule showing service interval frequency.

1.3.2.2 Preventative Maintenance Plan and Schedule

Include manufacturer's schedule for routine preventive maintenance, inspections, tests and adjustments required to ensure proper and economical operation and to minimize corrective maintenance. For periodic calibrations, provide manufacturer's specified frequency and procedures for each separate operation. Include detailed instructions for servicing and changing casters and caster assemblies on roller gates, servicing and changing moveable parts for adjustable seals, adjusting rubber seals, gate lifting for transporting to shops for major maintenance.

1.3.2.3 Cleaning Recommendations

Provide cleaning recommendations for each product, component, or system.

1.3.3 Corrective Maintenance (Repair)

Include manufacturer's recommended procedures and instructions for correcting problems and making repairs for the installed model and features of each system. Include potential environmental impacts of recommended maintenance procedures and materials.

1.3.3.1 Troubleshooting Guides and Diagnostic Techniques

Include step-by-step procedures to promptly isolate the cause of typical malfunctions. Describe clearly why the checkout is performed and what conditions are to be sought. Identify tests or inspections and test equipment required to determine whether parts and equipment may be reused or require replacement.

1.3.3.2 Wiring Diagrams and Control Diagrams

Wiring diagrams and control diagrams where applicable shall be point-to-point drawings of wiring and control circuits including factory-field interfaces. Provide a complete and accurate depiction of the actual job specific wiring and control work. On diagrams, number electrical and electronic wiring and pneumatic control tubing and the terminals for each type, identically to actual installation configuration and numbering.

1.3.3.3 Maintenance and Repair Procedures

Include instructions and a list of tools required to repair or restore the product or equipment to proper condition or operating standards.

1.3.3.4 Removal and Replacement Instructions

Include step-by-step procedures and a list of required tools and supplies for removal, replacement, disassembly, and assembly of components, assemblies, subassemblies, accessories, and attachments. Provide tolerances, dimensions, settings, and adjustments required. Instructions shall include a combination of text and illustrations.

1.3.3.5 Spare Parts and Supply Lists

Include lists of spare parts and supplies required for maintenance and repair to ensure continued service or operation without unreasonable delays. Identify spare parts and supplies that have a long lead-time to obtain.

1.3.4 Appendices

Provide information required below and information not specified in the preceding paragraphs but pertinent to the maintenance or operation of the product or equipment. Include the following:

1.3.4.1 Product Submittal Data

Provide a copy of all catalog cuts, illustrations, schedules, diagrams, performance charts, instructions, and brochures illustrating size, physical appearance, and other characteristics of materials, systems, or equipment for some portion of the work.

1.3.4.2 Manufacturer's Instructions

Provide a copy of all preprinted material describing installation of a product, system, or material, including special notices and information concerning impedances, hazards, and safety precautions.

1.3.4.3 O&M Submittal Data

Provide a copy of all:

- Data provided by the manufacturer, or the system provider, including manufacturer's help and product line documentation, necessary to maintain and install equipment, for operating and maintenance use by facility personnel
- Data required by operating and maintenance personnel for the safe and efficient operation, maintenance and repair of the item
- Data incorporated in an operations and maintenance manual or control system.

1.3.4.4 Parts Identification

Provide identification and coverage for all parts of each component, assembly, subassembly, and accessory of the end items subject to replacement. Include special hardware requirements, such as requirement to use high-strength bolts and nuts. Identify parts by make, model, serial number, and source of supply to allow reordering without further identification. Provide clear and legible illustrations, drawings, and exploded views to enable easy identification of the items. When illustrations omit the part numbers and description, both the illustrations and separate listing shall show the index, reference, or key number that will cross-reference the illustrated part to the listed part. Parts shown in the listings shall be grouped by components, assemblies, and subassemblies in accordance with the manufacturer's standard practice. Parts data may cover more than one model or series of equipment, components, assemblies, subassemblies, attachments, or accessories, such as typically shown in a master parts catalog.

1.3.4.5 Warranty Information

List and explain the various warranties and clearly identify the servicing and technical precautions prescribed by the manufacturers or contract documents in order to keep warranties in force. Include warranty information for primary components.

1.3.4.6 Personnel Orientation Requirements

Provide narrated instructional video footage of opening, closing, and latching of gates and reverse order to open and secure gates in the opened position using all instructed methods.

1.3.4.7 Testing Equipment and Special Tool Information

Include information on test equipment required to perform specified tests and on special tools needed for the operation, maintenance, and repair of components.

1.3.4.8 Testing and Performance Data

Include completed prefunctional checklists, functional performance test forms, and monitoring reports. Include recommended schedule for retesting and blank test forms. Checklist items include but are not limited to:

- Tide gates, swing gates and roller gates operate and move freely
- Latching handles on roadway gates operate and move freely
- Gates are secure when stored in locked position
- Coatings are intact with no rust
- Rubber gate seals are secured and protected with no tears
- Visible steel members and beams are correctly aligned
- Drain holes are clear of debris or other obstructions
- Tension rods are tight and lubricated
- Roller gate tracks and rails are aligned

1.3.4.9 Contractor Information

Provide a list that includes the name, address, and telephone number of the General Contractor and each Subcontractor who installed the product or equipment, or system. For each item, also provide the name address and telephone number of the manufacturer's representative and service organization that can provide replacements most convenient to the project site. Provide the name, address, and telephone number of the product, equipment, and system manufacturers.

1.4 SCHEDULE OF OPERATION AND MAINTENANCE DATA PACKAGES

Furnish the O&M data packages specified here for specific project components. The required information for each O&M data package is as follows:

Swing gates

a. Safety precautions
b. Operator prestart
c. Normal operations
d. Alternative operations
e. Operator service requirements
f. Lubrication data
g. Preventative maintenance plan and schedule
h. Removal and replacement instructions
i. Spare parts and supply list
j. Product submittal data
k. Manufacturer’s instructions
l. O&M submittal data
m. Parts identification
n. Testing equipment and special tool information
o. Warranty information
p. Personnel training requirements
q. Testing and performance data
r. Contractor information

Roller gates

a. Safety precautions
b. Operator prestart
c. Normal operations
d. Alternative operations
e. Operator service requirements
f. Lubrication data
g. Preventative maintenance plan and schedule
h. Cleaning recommendations
i. Removal and replacement instructions
j. Spare parts and supply list
k. Product submittal data
l. Manufacturer's instructions
m. O&M submittal data
n. Parts identification
o. Testing equipment and special tool information
p. Warranty information
q. Personnel training requirements
r. Testing and performance data
s. Contractor information

Tide gates

a. Safety precautions
b. Operator service requirements
c. Environmental conditions
d. Lubrication data
e. Preventative maintenance plan and schedule
f. Cleaning recommendations
g. Maintenance and repair procedures
h. Removal and replacement instructions
i. Spare parts and supply list
j. Product submittal data
k. Manufacturer's instructions
l. O&M submittal data
m. Parts identification
n. Testing equipment and special tool information
o. Warranty information
p. Testing and performance data
q. Contractor information

Floodproof Manhole Covers

a. Safety precautions
b. Normal operations
c. Operator service requirements
d. Lubrication data
e. Preventative maintenance plan and schedule
f. Cleaning recommendations
g. Maintenance and repair procedures
h. Removal and replacement instructions

i. Spare parts and supply list
j. Product submittal data
k. Manufacturer's instructions
l. O&M submittal data
m. Parts identification
n. Testing equipment and special tool information
o. Warranty information
p. Testing and performance data
q. Contractor information

1.5 MEASUREMENT AND PAYMENT

No separate payment will be made for compliance with the requirements of this Section.

SECTION HW-908 – ALLOWANCE FOR EXTRA WORK DUE TO ARCHEOLOGICAL DISCOVERIES

In accordance with the Special Provisions article titled “ARCHAEOLOGICAL DISCOVERIES”, should extra work be ordered by the Engineer as a result of any archaeological discoveries being found under this project, it must be paid for under this item as extra work in accordance with the requirements of Article 26 in the Standard Construction Contract dated January 2018.

Payment made under this Fixed Sum item must cover the cost of all labor, materials, plant, equipment, insurance, and incidentals necessary to complete any extra work ordered by the Engineer due to archaeological discoveries found at the site.

No guarantee is given that this allowance item will in fact be required in this contract. The estimated “fixed sum” amount shown in the Bid Schedule is included in the total bid solely to insure a method of payment for any extra work performed by the Contractor, as directed by the Engineer in consultation with the City’s Archaeologist due to archaeological discoveries found at the site.

Payment will be made under:

Item No.	Item	Pay Unit
HW-908	ALLOWANCE FOR EXTRA WORK DUE TO ARCHAEOLOGICAL DISCOVERIES	F.S.

SECTION ESCR 9.30 – STORMWATER POLLUTION PREVENTION

9.30.1. INTENT.

The intent of this section is to address erosion and sediment control as well as control of pollutants generated during construction activities that disturb an area of one acre or more. It also includes activities involving soil disturbances of less than one acre where the Department has determined that a SPDES permit is required for Stormwater discharges that may contribute to a violation of a water quality standard. The objective is to implement a Stormwater Pollution Prevention Plan (SWPPP) that will minimize the pollutants entering the storm sewer systems in compliance with the New York's State Pollutant Discharge Elimination System (SPDES) General Permit for Stormwater Runoff from Construction Activity, GP-0-20-001, issued pursuant to Article 17, Titles 7, 8 and Article 70 of the Environmental Conservation Law (ECL) and in compliance with the City's Separate Municipal Separate Storm Sewer System Construction Permitting (MS4CP) Program. The MS4CP Program was established to meet the requirements of the SPDES Permit, NY-0287890, issued on August 1, 2015 for MS4s owned or operated by the City of New York.

The Department is currently pursuing a 5-acre waiver with New York State Department of Environmental Conservation (NYSDEC), the provisions and requirements of which will be made available to the Contractor.

A copy of the SWPPP (February 2020) for the ESCR Contract is attached to the specifications and includes copies of the General Permit and the Notice of Intent (NOI) for New York. Copies of the MS4 SPDES Permit and other Information on the City's MS4CP Program are available at the following website:

https://www1.nyc.gov/site/dep/water/municipal-separate-storm-sewer-system.page

The sediment and erosion controls shown in the SWPPP and Sediment and Erosion Control drawings were developed for the ESCR project; any changes to scheduling or sequencing would need to be coordinated and in compliance with the SPDES General Permit for Stormwater Runoff from Construction Activity and the New York City MS4 Construction Permit.

9.30.2. MATERIALS AND METHODS.

The Contractor and their subcontractor(s) must sign onto the SWPPP as the operator and be responsible for implementing and maintaining the SWPPP prepared for this Contract. The Contractor shall retain the services of an independent Licensed/Certified Professional with practical experience in the principles and practices of erosion and sediment control and Stormwater management, to perform the role of the "Qualified Inspector." The "Qualified Inspector" must be a Professional Engineer or a Landscape Architect licensed to practice in New York State, or a Soil and Water Conservation Society Certified Professional in Erosion and Sediment Control (CPESC) who is independent from the Contractor.

The Contractor shall implement Stormwater Management Practices (SMPs) that are to be used to reduce the pollutants in stormwater discharges, their sequence of implementation and associated design details of the SMPs to be installed for their designated contract as shown in the SWPPP. All practices included in the SWPPP shall be in conformance with the most current version of the New York State Standard and Specifications for Erosion and Sediment Control.

The Contractor shall provide site specific updates to Erosion and Sediment Control (E&SC) Plans contained in the SWPPP to accommodate their means and methods of construction and submit these for approval. The updated E&SC Plans shall include a minimum of the following in accordance with SMPs described in the SWPPP:

1. A site map/construction drawing(s) showing the total site area, all improvements, areas of disturbance, areas that will not be disturbed, existing vegetation, the specific locations, sizes and length of each erosion and sediment control practice, on-site and adjacent off-site surface waters, wetlands and drainage patterns that could be affected by the construction activity, existing and final slopes, equipment storage areas and locations of the stormwater discharge;
2. A Construction phasing plan and sequence of operations describing the intended order of

construction activities, including clearing and grubbing, excavation and grading, utility and infrastructure installation and any other activity at the site that results in soil disturbance. The construction phasing plan must include a timeline in accordance with the overall project schedule;

3. A description of the minimum erosion and sediment control practices to be installed or implemented for each construction activity that will result in soil disturbance. Include a schedule that identifies the timing of initial placement or implementation of each erosion and sediment control practice and the minimum time frames that each practice should remain in place or be implemented;
4. A temporary or permanent soil stabilization plan that meets the requirements of the most current version of the New York Standards and Specifications for Erosion and Sediment Control, for each stage of the project, including initial land clearing and grubbing to project completion and achievement of final stabilization;
5. The dimensions, material specifications, installation details, and operation and maintenance requirements for all sediment control practices;
6. An inspection schedule for the Contractor and Sub-Contractor(s) identified in the SWPPP, to ensure continuous and effective operation of the erosion and sediment control practices; and,
7. a description of the pollution prevention measures that will be used to control litter, construction chemicals and construction debris from becoming a pollutant source in the stormwater discharges.

The Contractor must obtain and maintain a copy of the prepared SWPPP materials for this Contracts, including the SWPPP, SWPPP MS4 Acceptance Form from NYC Department of Environmental Protection (DEP), and NYSDEC NOI. The Contractor is responsible for the preparation, submittal, and procurement of the Permit Initiation Form associated with the NYCDEP SCP. Work must not begin until the permit identification number is issued by the NYSDEC, SCP is issued for the project by NYCDEP, and an initial inspection is conducted by the Qualified Inspector certifying that the appropriate control measures specified in the SWPPP have been adequately implemented to the satisfaction of the Engineer in consultation with the DDC Engineering Support Unit. There are multiple Contracts with overlapping Work (SANDRESEP, SANDRESM1, SANDRESM2, and SANDRESPC) and the Contractor is responsible for any coordination of overlapping work required to fully implement the SWPPP at no additional cost to the City.

9.30.3. DEVIATIONS AND AMENDMENTS.

Any Contractor-initiated amendments to the SWPPP that deviates from the NYSDEC technical standard and/or the NYCDEP Stormwater Design Manual must have a section justifying any non-conformance. The justification must include, but not be limited to, the following:

1. Statement of each deviation from City and State requirements;
2. Statement of the reasons for each deviation and reasons for supporting adopted alternatives;
3. Provide information which demonstrates that the deviation or alternative design is equivalent to the Technical Standards and the Stormwater Design Manual;
4. Analysis of the water quality impacts; and,
5. Determination of no-net-increase changes, if applicable.

The Contractor must maintain the SWPPP current and have the Qualified Inspector amend the SWPPP whenever:

1. There is a significant change in construction or operation which may have a significant effect on the potential for the discharge of pollutants to the waters of the New York State and which has not otherwise been addressed in the SWPPP; or,

2. The SWPPP proves to be ineffective in:

    a) Eliminating or significantly minimizing pollutants generated from sources identified in the SWPPP as required by this general permit, or

    b) Achieving the general objectives of controlling pollutants in stormwater discharges from permitted construction activities.

Additionally, the SWPPP must be amended to identify any new Contractor or Sub-contractor that will implement any measures of the SWPPP. Any Contractor-initiated amendments to the SWPPP shall be made at no additional cost to the City.

9.30.4. CERTIFICATION.

The SWPPP must clearly identify the Contractor and Sub-contractors that will implement each measure identified in the SWPPP. The Contractor and all Subcontractors identified in the SWPPP and who perform professional services at the site must implement the provisions of the plan and provide certification of the SWPPP in accordance with the provisions of the general permit GP-0-15-002 and the SCP The Contractor must also certify in the SWPPP that all appropriate stormwater and erosion control measures will be in place before commencement of construction of any segment of the project that requires such measures. Such certifications must become part of the SWPPP for the construction activity covered under this general permit. The Certification must include the name and title of the person providing signature of this permit; the name address and telephone number of the contracting firm; the address or other identifying description of the site; and, the date the certification is made.

9.30.5. SITE ASSESSMENT, INSPECTION AND MAINTENANCE.

The Contractor must have the Qualified Inspector conduct an assessment of the site prior to commencement of construction and certify in an inspection report that the appropriate erosion and sediment controls described in the SWPPP have been adequately installed or implemented to ensure overall preparedness of the site before the commencement of construction. Following the commencement of construction, site inspections must be conducted by the Qualified Inspector at least every seven (7) calendar days and within twenty-four (24) hours of the end of each rainfall event of 0.5 inches or greater. For construction sites where soil disturbance is greater than five (5) acres at one time, the Qualified Inspector must conduct at least two (2) site inspections every seven (7) calendar days and within twenty-four (24) hours of the end of each rainfall event of 0.5 inches or greater and any additional inspections as required by NYSDEC or NYCDEP. The two inspections must be separated by a minimum of two (2) full calendar days. Subsequent to each inspection, the Qualified Inspector must prepare an inspection report and submit the original to the Engineer and one copy to the Infrastructure-Engineering Support Unit. At a minimum, the inspection report must include, but not limited to, the following information:

1. Date and Time of inspection;
2. Name and Title of person performing the inspection;
3. A description of the weather and soil conditions (e.g. dry, wet, saturated) at the time of the inspection;
4. A description of the condition runoff at all points of discharged from the construction site. This must include identification of any discharges of sediment from the construction site;
5. A description of the condition of all-natural surface waterbodies located within or immediately adjacent to the properties boundaries of the construction site which receive runoff from disturbed areas. This must include identification of any discharges of sediment to the surface waterbody;
6. Record of any evidence of soil erosion on the site, potential for pollutants entering the drainage systems, problems at discharge points (such as turbidity in receiving water) and signs of soil and mud transport from the site to the public road at the limits of the project;
7. Identification of all erosion and sediment control practices that need repair or maintenance;
8. Identification of all erosion and sediment practices that were not installed properly or are not functioning as designed and need to be reinstalled or replaced;

9. Description and sketch of areas that are disturbed at the time of the inspection and areas that have been stabilized (temporary and/or final) since the last inspection;
10. Corrective actions that must be taken to install, repair, replace or maintain erosion and sediment control practices; and to correct deficiencies identified with the construction of post-construction stormwater management practices;
11. Digital photographs, with date stamp, that clearly show the condition of all practices that have been identified as needing corrective actions. The Qualified Inspector must attach paper color copies of the digital photographs to the inspection report. The Qualified Inspector must also take digital photographs with date stamp, that clearly show the conditions of the practice(s) after the corrective actions has been completed;
12. Within one business day of the completion of an inspection, the Qualified Inspector must notify the Contractor and the Engineer of any corrective actions that need to be taken. The Contractor must begin implementing the corrective actions within one business day of this notification; and,
13. All the inspection reports must be signed by the Qualified Inspector.

The Contractor must retain a signed copy of the General Permit GP-0-15-002, NOI, SWPPP, signed MS4 SWPPP Acceptance form, NOI Acknowledgment Letter, the SCP, and all original inspection reports required by this general permit at the construction site in a prominent place for public viewing from the date of initiation of construction activities to the date of final stabilization and the Notice of Termination (NOT) has been submitted to the NYSDEC and NYCDEP. These documents must be made available to the permitting authority upon request.

In addition, the Contractor and Subcontractors must identify at least one person who is an employee of the company that will be responsible for a day to day implementation of the SWPPP. The name and telephone number of this person should be listed in the SWPPP. This person must be known as the Trained Contractor and must have received a DEC-endorsed four (4) hours of Erosion and Sediment Control training. After receiving the initial training, the Trained Contractor must attend a four (4) hours training every three (3) years. The Contractor must ensure that at least one Trained Contractor is on site on a daily basis when soil disturbance activities are being performed.

Performing implementation of a SWPPP on a permitted construction project without a Trained Contractor on site daily is a violation of Part III.A.6 of the SPDES General Permit. Stormwater controls must be maintained in good operating condition until all disturbed soils are permanently stabilized. Control devices in need of repair should be repaired promptly after identification.

Once construction is completed, the Contractor must submit the NYSDEC Notice of Termination (NOT) to DEP for the MS4 acceptance signature. If required, the Contractor shall prepare a Stormwater Maintenance Permit application consisting of the NOT, as-built plan(s), operation and maintenance manual that designates the entity responsible for long term maintenance of SMPs, and any required fees as specified in the NYCDEP MS4 Stormwater Rule. NYCDEP may inspect the SMP(s) at any time and any deficiencies must be resolved by the Contractor at no additional cost to the City. Prior to filing of the Notice of Termination (NOT), or at the end of the permit term, the Contractor must have the Qualified Inspector perform a final site inspection. The Qualified Inspector must certify that the site has undergone final stabilization using either vegetative or structural stabilization methods and that all temporary erosion and sediment controls (such as silt fencing) not needed for long term erosion control have been removed. Subsequently, the Contractor must submit a complete NOT to the Engineering Support Unit to terminate the permit coverage.

Additionally, the Qualified Inspector must identify all permanent Stormwater management structures that have been constructed, and provide the owner(s) of such structures with a manual describing the operation and maintenance practices that will be necessary in order for the structures to function as designed after the site has been stabilized.

The Qualified Inspector must also certify that the permanent structures have been constructed as described in the SWPPP.

9.30.6. STABILIZATION.

The Contractor must initiate stabilization measures by the end of the next business day in areas of the site where construction activities have temporarily or permanently ceased, and completed within fourteen (14) days from the date the current soil disturbance activity ceased. For construction sites that directly discharge to one of the 303(d) segments listed in the Appendix E of the General SPDES permit, the application of soil stabilization measures must be initiated by the end of the next business day and completed within seven (7) days from the date the current soil disturbance ceased.

9.30.7. CONTRACTOR'S LIABILITY.

The Contractor must be liable for any discharge that either causes or contributes to a violation of water quality standards as contained in Parts 700 through 705 of Title 6 of the Official Compilation of Codes, Rules and Regulations of the State of New York. Should any stormwater runoff from the site violate the water quality standards, the Contractor will be directed to take immediate steps, at the Contractor's own expense, to rectify the situation and prevent any further sediment from entering the storm sewer system.

In the event that pollutants are discharged to the stormwater system due to the Contractor's negligence, the Engineer will direct the Contractor to cease any or all construction activities contributing to the release of these pollutants. The Contractor must be held responsible, at the Contractor's own cost, for any and all necessary actions to remedy the damage.

Furthermore, failure of the Contractor and Sub-contractor(s) to strictly adhere to any permit requirements must constitute a permit violation that could result in substantial criminal, civil, and administrative penalties.

It is the Contractor's responsibility to pay all the SPDES permit fees which must consist of the yearly regulatory fee, the initial authorization fee per acre of land disturbed and per acre of future impervious area. The Contractor must be liable for all penalties incurred due to the Contractor's failure to pay these fees on time.

9.30.8. MEASUREMENT AND PAYMENT.

Payment will be made at the lump sum price bid for the item Stormwater Pollution Prevention, which must include, but not be limited to, the cost of furnishing all the labor, materials, fees, permits and testing required to provide and construct all erosion and sediment control devices in accordance with the approved SWPPP; providing a Qualified Inspector to design, report, inspect and monitor the work; comply with NYSDEC permitting requirements and all necessary incidentals to complete the work all in accordance with the specifications and the directions of the Engineer.

Ten percent (10%) of the lump sum price bid will be paid when both NYSDEC and NYCDEP have issued a permit identification number and SCP for the project, respectively.

Seventy percent (70%) will be paid in proportion to the percentage of construction completion.

Twenty percent (20%) will be paid when the operation is demobilized and removed from the site, the Notice of Termination (NOT) is filed with NYSDEC and all SPDES permit fees have been paid.

Payment will be made under:

Item No.	Item	Pay Unit
ESCR-9.30	STORMWATER POLLUTION PREVENTION	L.S.

SECTION ESCR-5 – CONSTRUCTION AND DEMOLITION WASTE MANAGEMENT

1.01 DESCRIPTION

These general conditions specify sustainability compliance and documentation requirements. Specific sustainable design and construction strategies incorporated into the Project include, but are not limited to:

A. Waste Management and Recycling
B. Use of Materials with Recycled Content
C. Use of locally-manufactured materials
D. Use of low-emitting materials
E. Use of certified wood products
F. Lead Reduction

1.02 RELATED DOCUMENTS

A. S-Pages Article “Greenhouse Gas Emissions”
B. S-Pages Article “Revisions: Specifications and Contract Drawings”
C. FLOODWALL-Pages Section ESCR-6.27
D. HAZ-Pages Section ESCR 8.01
E. GENERAL-Pages Section ESCR 9.30

1.03 SUBMITTALS

Submittal No.	Paragraph No.	Submittal	Submittal Type
1	3.01.A	Compliance Documentation in accordance with NYS Governor’s Executive Order 111	For Information
2	3.01.B	Sustainable Materials Submittal Form	For Information
3	3.01.C.9	Waste Management and Recycling Plan	For Approval
4	3.01.C.10	Monthly Recycling Reports	For Information
5	3.02.A	Environmental Performance Records	For Approval

1.04 CITED STANDARDS

A. New York State Governor’s Executive Order 111 “Green and Clean” State Buildings and Vehicle Guidelines
B. United States Green Building Council (USGBC) green building assessment: Leadership in Energy and Environmental Design, LEED-NC, Version 2.2
C. Environmental Protection Agency Comprehensive Procurement Guidelines
D. Forest Stewardship Council (FSC) for Certified Wood
    a. “FSC Principles and Criteria of Forest Stewardship”
E. Green Seal Environment Standard for Paints
    a. GS-11 Top Coat Paints
    b. GC-03 Anti-corrosive and Anti-rust paints
F. South Coast Air Quality Management District (SCAQMD) Rules and Regulations
    a. Regulation XI, Rule 1113 – Architectural Coatings
    b. Regulation XI, Rule 1168 – Adhesive, Sealant, and Sealant Primer Applications
G. Bay Area Air Quality Management District (BAAQMD) Rules and Regulations
    a. Regulation 8, Rule 51 – Adhesive and Sealant Products
H. US Environmental Protection Agency/US Department of Energy (EPA/DOE) Energy Star Program
I. Federal Trade Commission (FTC) Guides for the Use of Environmental Marketing Claims
    a. 16 CFRR 260.7(e) – Recycled Content
J. Environmental management systems consistent with ISO (International Organization for Standardization) 1401

K. Product-specific type III Environmental Product Declaration (EPD) conforming to ISO 14025, 14044.
L. ISO 14021 Environmental labels and declarations – Self declared environmental claims (Type II environmental labelling)

PART 2 PRODUCTS - Not used

PART 3 EXECUTION

3.01 RESPONSIBILITIES

The Contractor must implement relevant criteria in accordance with NYS Governor's Executive Order 111 "Green and Clean" State Buildings and Vehicles Guidelines and submit supporting documentation to demonstrate compliance. At least 15% of all project materials, supplies, and equipment must meet the cited standards in 1.04. Contractor must provide calculation of the percentage of the total project materials by cost, weight, or volume. Contractor must provide all material/supplier tracking forms and/or spreadsheets. At least 5% of all project materials must include recycled content as described in ISO 14021. Contractor must provide percentage of reused or recycled materials by weight, volume, or cost. Additionally, the Contractor must provide inventory of specifications of materials containing recycled content. Inventory must include the name of the product, the name of the manufacturer, the weight, volume, or cost of the material, and the percentage of recycled content (either post-industrial or post-consumer recycled content).

Sustainability Submittal Packages: The Contractor must designate a member of its team to be responsible for tracking and submitting all sustainability documentation. A Sustainable Materials Form must be submitted monthly. Electronic copies must be submitted at the end of the Project including all cumulative data. The Form must include the following information:

A. Breakdown by weight for the materials included in the Contractor's or subcontractor's scope of Work.
B. Percentages by weight of post-consumer and/or post-industrial recycled content in the supplied products
C. Identification of materials manufactured or harvested within a 500-mile radius of the Project site.
D. Identification of Forest Stewardship Council (FSC)-certified wood products
E. Volatile Organic Compound (VOC) content of all interior field-applied adhesives, sealants, paints and coatings.

3.02 WASTE MANAGEMENT AND RECYCLING

A. The Contractor must minimize the impact to the environment due to waste production from construction activities.

B. The Contractor must divert at least fifty percent (50%) of all demolition and general construction waste from landfills by one or a combination, of the following activities:

- salvage,
- reuse,
- source-separated recycling, or
- co-mingled recycling.

Land clearing debris (including spoils) is exempt from the landfill diversion requirement.

C. Where practicable, the Contractor must stockpile and reuse non-contaminated, non-hazardous on-site excavated materials. Beneficial re-use of spoil is to be given priority.

D. The Contractor must designate a specific area to facilitate separation of materials for potential salvage, recycling and waste. Recycling and waste bin areas must be kept neat and clean and clearly marked in order to avoid contamination of materials.

E. The Contractor must oversee and document results of the Waste Management and Recycling Plan. The Contactor must provide on-site instruction covering separation, handling and recycling, salvage, reuse and return methods to be employed by all parties at the appropriate stages of the project.

F. The Contractor must develop, submit for approval, and implement a Waste Management and Recycling Plan within thirty (30) days after Notice of Award. The Waste Management and Recycling Plan must contain the following information:

a. Estimate the total proposed jobsite waste to be generated, including types and quantities

b. Proposed alternatives to Landfilling: A list of each materials proposed to be salvaged, reused, or recycled during the course of the Project, the proposed destination for each material and the projected amount (by weight or cubic yards).

c. Materials handling procedures. A description of the means by which any waste material that must be salvaged or reused must be protected from contamination, and a description of the means to be employed in recycling the above materials consistent with the requirements for acceptance by recycling facilities to be utilized.

d. Identify licensed haulers, transfer stations, processors of recyclables, and transportation procedures.

G. The Contractor must maintain records of all recycled materials and submit monthly Recycling Reports. The Reports must include:

a. Project title, name of company completing report, the dates of the period covered by the report, and Contract Number.

b. Include legible copies of the on-site logs, weight tickets, and receipts. Receipts must be from recycling and/or disposal site operators who can legally accept the materials for the purpose of reuse, recycling, or disposal.

c. If mixed C&D waste is sorted off-site, provide documentation from the processor stating that the average percentage of mixed C&D waste they recycle. The documentation must be the latest annual recycling report to the NYS Department of Environmental Conservation pursuant to 6 NYCRR Part 360 regulations, or a letter from the processor containing the equivalent information if the report is not available.

d. In the event that the Contractor cannot fulfill the diversion rate specified, the Contractor must notify the Engineer as soon as possible. The Contractor must provide documentation showing a good faith effort was made to achieve the diversion rate.

e. Report on the disposal of all jobsite waste including:

    1. Recycled materials. For each material provide the following:
        a. Amount (in tonnage or cubic yards)
        b. Dates removed from the project site
        c. Receiving party
    2. Reused or salvaged materials. For each material, provide the following:
        a. Amount estimated (in tonnage or cubic yards)
        b. Description of actual use
    3. Landfilled Material. For each material provide the following:
        a. Amount (in tonnage or cubic yards) of material landfilled from the Project
        b. Dates removed from the jobsite
        c. Identity of the transfer station or landfill
        d. The percentage of each material recycled, reused, salvaged and/or landfilled must be indicated, both for the progress period and cumulatively for the Project. The total percentage of waste diverted from landfilling, both for the progress period and cumulative total, must be clearly indicated.

H. The Contractor must include a waste reduction provision in material purchase agreements requesting that materials and equipment be delivered in packaging made of recyclable materials, that they reduce the amount of packaging, that packaging be taken back for reuse or recycling, and to take back all unused product. The Contractor must ensure that subcontractors require the same provisions in their purchase agreements.

I. The Contractor is encouraged to seek information from all sources in order to minimize disposal costs. There are numerous opportunities to sell or donate salvaged materials and accrue tax benefits (which could accrue to the Contractor). There exist outlets that will pick up, and in some cases buy, recyclable materials. Information sources are as follows:

a. New York Waste Match: https://www.opengreenmap.org/greenmap/less-more-nyc/nyc-waste-match-36062

PART 4 MEASUREMENT AND PAYMENT

4.01 MEASUREMENT AND PAYMENT

No separate payment will be made for complying with the requirements of this section.

SECTION ESCR-6 - CONSERVATION OF WATER AND ENERGY

1.01 DESCRIPTION

These conservation conditions specify sustainability compliance and documentation requirements. Specific construction conservation strategies incorporated into the Project include, but are not limited to:

A. Construction Energy Consumption

B. Construction Water Consumption

1.02 RELATED DOCUMENTS – Not Used

1.03 SUBMITTALS

Submittal No.	Paragraph No.	Submittal	Submittal Type
1	3.01.A	Summary of planning review and identification of strategies to reduce energy consumption	For Information
2	3.01.C	Documentation that strategies have been implemented	For Information
3	3.02.A	Summary of planning review and identification of strategy(ies) to reduce water consumption	For information
4	3.02.C	Calculations of potable water saved	For Information

1.04 CITED STANDARDS – Not Used

PART 2 PRODUCTS - Not used

PART 3 EXECUTION

3.0 RESPONSIBILITIES

The Contractor must implement strategies to reduce construction energy and water consumption.

3.01 CONSTRUCTION ENERGY CONSUMPTION

A. The Contractor must participate in at least one (1) planning review to identify and analyze the potential for reducing energy consumption during construction.

B. The Contractor must implement at least two (2) of the following strategies to reduce construction energy consumption:

a. Tier IV construction equipment or Tier III with Best Available Technology (BAT) for at least 75% of non-road equipment fleet greater than 50 horsepower;

b. Alternative fuels in heavy equipment such as biodiesel for at least 5% of total fuel consumption;

c. Electrified equipment for at least 20% of equipment (vs. gas or diesel engines);

d. Employee commuting programs with incentives (shuttles to transit, ride-share programs, biking facilities, etc.);

e. Reduce purchased energy for workstations (construction trailer/office energy) by 30% for two of the following: (1) lighting; (2) HVAC; (3) plug loads;

f. Purchase green power (RECs) for 30% of workstation energy consumption;

g. Offset electrical consumption by generating 5% renewable energy on site (e.g., solar panels on trailer complex, solar-powered temporary light plant, solar-powered cameras and variable message sign boards); and

h. Reduce overall fuel consumption by 10% through improved planning and logistics. Specific strategies may include:

i. Reduce number of deliveries;
ii. Reduce idle times;
iii. On-site reuse of soils or other materials to decrease truck traffic to and from site (ties into Reduced Excavated Material taken off site);
iv. Reduce on-site trucking – proper logistics planning such as staging material in close proximity to installation location;
v. Schedule acceleration without additional resource consumption;
vi. Waterborne/rail transportation of materials versus trucking (third-party distribution or logistics);
vii. On-site plants (concrete plant/asphalt plant) in lieu of trucking material to the site; and
viii. Prefabrication of design elements.

C. The Contractor must provide all relevant evidence supporting strategies implemented on a monthly basis.

3.02 CONSTRUCTION WATER CONSUMPTION

A. The Contractor must participate in at least one (1) planning review to identify and analyze the potential for reducing water consumption during construction.

B. The Contractor must implement at least one (1) of the following strategies to reduce construction energy consumption:

a. High-efficient fixtures in construction trailers or offices (demonstrate a 40% reduction in usage)

b. Monitoring and management (demonstrate team's ability to detect leaks and respond to inefficiencies in the system)

c. Reduce embodied water of materials by reducing waste material (calculate a 10% reduction in material quantities entering the site as new material)

d. Reduced embodied water through material selection (permanent and temporary materials) (Demonstrate how product selection has contributed to reduced potable water consumption by more than 25%)

e. Stormwater harvesting (show 40% savings by using harvested stormwater)

f. Greywater or wastewater effluent reuse (show 40% reuse)

g. Dewatering reuse (show 40% reuse/recycling)

C. The Contractor must provide calculations of potable water saved per gallon for each strategy as compared to not implementing the strategy over the construction duration.

D. The Contractor must provide all relevant evidence supporting strategies implemented.

PART 4 MEASUREMENT AND PAYMENT

4.01 MEASUREMENT AND PAYMENT

No separate payment will be made for complying with the requirements of this section.

SECTION ESCR-7.13 WF1 – MARITIME LOAD-OUT FACILITY

1.0 DESCRIPTION

This work shall consist of providing, furnishing and maintaining an offsite maritime facility capable of accepting, inspecting, storing, and loading materials, equipment and other items onto barges or vessels for transportation to/from the Project Site.

This work shall consist of providing a waterfront pier, property, or facility within 25 miles of the Project Site capable of accepting all materials, equipment and items related to the project for inspection, transfer, and transportation to/from the project site via barge and/or vessel.

2.0 CONSTRUCTION DETAILS

The facility must comply with the following minimum requirements:

- Capable of marine transfer operations for vessels, barges and other floating equipment to be utilized on the project.
- Capable of materials and equipment transfer .
- Capable of berthing multiple vessels, barges, and other floating equipment, such that the facility's ability to loadout for the project is not affected, including the capacity of the pier, bulkhead, or waterfront structure to support all loads anticipated by the project and/or equipment needed.
- Have storage space available to allow pre-staging of the project and bulk delivery of materials for timely mobilization to the project site.
- Be designed to meet the Storm Water Pollution Prevention Plan (SWPPP), and prevent any material from entering the waterway during transfer.
- Have office space available for the Engineer with sanitary facilities, power, space for 2 desks, and high-speed internet.
- Be accessible by the Construction Manager and all staff for controlled inspections of materials and equipment prior to mobilization to the project Site
- Have no less than 3 parking spots available for the Engineer.

The Facility must be fully equipped and made available for use by the Contractor as necessary to support the Contractor's schedule.

3.0 METHOD OF MEASUREMENT

The Facility will be measured for payment as the number of months satisfactorily provided, measured to the nearest 0.25 months.

4.0 BASIS OF PAYMENT

The unit price bid per month for the Maritime Load-out Facility shall include the cost of all labor, materials and equipment necessary to complete the work including but not limited to property rental, berthing and mooring costs, equipment, facility construction, permits, field offices, utility charges and incidental expenses. Payment will be made for each month of availability where the facility actually supports the Project site.

No payment will be made under Maritime Load-out Facility for each calendar day during which there are deficiencies in compliance with these requirements. The first calendar day shall commence 24 hours after notice to the Contractor of such a deficiency. This nonpayment shall be deducted from the next contract payment. The amount of such calendar day nonpayment will be determined by dividing the unit price bid per month by 30.

Monthly payments may be terminated prior to Substantial Completion by written notification from the Engineer that the Facility will no longer be required.

Payment will be made under:

Item No.	Item	Pay Unit
ESCR-7.13 WF1	Maritime Load-out Facility	Month

SECTION ESCR-7.13WF2 – ON-SITE WATERFRONT OPERATIONS FACILITY

1.0 DESCRIPTION

This work shall consist of providing, furnishing and maintaining a Waterfront Operations Facility capable of accepting (receiving), inspecting, storing, and loading vessels, barges, materials, equipment and other items to and from barges, vessels, and the project site. Due to limited land-access and roadways capable of supporting the project, the Contractor is expected to utilize maritime transportation to the project site to the maximum extent possible. The Contractor must plan the Work and utilize the Waterfront Operations Facility so that divisible materials such as fill are not delivered to site via tractor-trailer multi-unit vehicles, and so that no oversize truck deliveries are required.

1.01 Waterfront Operations Facility

This work shall consist of providing operational waterfront facilities to support the project, such as, barges, spud barges, jackup barges, construction trestles, temporary piers, temporary wharves, articulating ramps and gangways, roll on-roll off (RORO) facilities, lift on – lift off (LOLO) facilities, moorings, floating moorings, fendering, and vessels at the Project Site. The to:

- Stage all waterfront and floating equipment.
- Accept all materials, equipment and items related to the project for inspection, transfer, and transportation to the project site via barge and/or vessels.
- Accommodate all facets of marine and waterfront construction including but not limited to floating equipment, dive crews, barges, falsework, and vessels.

1.02 Inspection Boat

This work shall consist of providing and maintaining a motorized boat for exclusive use by the Construction Manager and the Inspection Staff for the express purposes of transportation and inspections at the Project Site.

1.03 Tug Boat

This work shall consist of providing and maintaining a manned tug or push boat at the project site capable of moving floating equipment as-needed, where-needed, and provide maritime security on a 24-hour basis.

2.0 CONSTRUCTION DETAILS

2.01 Waterfront Operations Facility

The facility must be planned, designed, laid out, constructed, operated, and removed by the Contractor in order to accommodate all anticipated marine construction and transfer activities. The Waterfront Operations Facility must:

- Deep draft as necessary for marine transfer operations for vessels, barges and other floating equipment to be utilized on the project.
- Include all necessary piers, wharves, fender systems, ramps, gangways, vessel berthing, monopiles, dolphins, moorings, loading facilities, barge anchorages, crane lift plans, barge stability certification (USCG), and other miscellaneous structures.
- Capable of all necessary materials and equipment transfer.
- Support all marine construction on the site including but not limited to infrastructure construction, waste removals, marine fueling, safety boats, soils transfer, moorings, berthing, maintenance and inspections.
- Capable of berthing multiple vessels, barges, and other floating equipment, such that the facility's ability to loadout for the project is not affected, including the capacity of the pier, bulkhead, or waterfront structure to support all loads anticipated by the project and/or equipment needed.
- Be designed to meet the Storm Water Pollution Prevention Plan (SWPPP), and prevent any material from entering the waterway during transfer.

- Be accessible by the Engineer.

2.02 Marine Surveying

The Contractor shall perform all marine surveying tasks necessary to undertake and complete the work in this Section including, but not limited to:

- bathymetric and topographic surveys.
- Utility surveys, submerged or otherwise.
- mapping of appurtenances, features, navigation structures, moorings, buoys, bridge piers, pier fenders, and utilities as needed.
- locating boundaries, easements, tunnels, anchorages and any other items that may affect the work on the water.
- Waterway surveys including navigational channels.

2.04 Permits and Approvals

The contractor shall be responsible for obtaining all permits with regards to the work in this section including but not limited to the US Army Corps of Construction Managers (USACE), NYS Department of Environmental Conservation (NYSDEC), NYS Office of General Services (OGS), NYC Department of Small Business Services (DSBS), the United States Coast Guard (USCG), and all ancillary, prerequisite, or otherwise necessary approvals:

- The Contractor shall prepare all environmental analyses and procure all environmental permits and approvals as needed for all Contractor-located areas, including staging, borrow and disposal sites, and any other areas used by the Contractor, for its convenience, in the execution of the Project.
- The Contractor shall be responsible for preparing all permit application materials, performing all environmental analyses and obtaining all environmental permits and approvals necessary for the Project and not already obtained by the Department, including those that are precipitated by the Contractor's design or actions that deviate from the requirements of any acquired permit(s) (if any) and any preliminary environmental documents. For any such approvals required to be obtained or environmental analyses to be performed by the Contractor that must formally be issued in the Department's name, the Department will cooperate with the Contractor as reasonably requested by the Contractor, including execution and delivery of appropriate applications and other documentation as prepared by the Contractor.
- Prior to submitting to third parties, the Contractor shall submit any permit/approval applications for review by the Construction Manager. The Contractor shall also submit the final environmental review compliance documents to the Construction Manager for review. The Contractor shall allot five (5) business days for the Department to review and comment on the completeness and adequacy of the application materials. It shall then be the Contractor's discretion to address any Department comments or elect to move forward with the application materials as submitted to the Department.
- The Contractor shall be solely responsible for compliance with and violations of any Environmental Requirements.
- The Contractor is responsible for any fines, non-compliance, violations, or damages incurred by reason of failure of the Contractor to comply with the requirements of this Section, Environmental Analyses, Permits, and Approvals. Any penalties, fines or damages imposed upon the Department shall be deducted from monies owed the Contractor.
- The Contractor shall be responsible for payment of all permit application and permit issuance fees for the Environmental Approvals necessary for the Project not already obtained by the Department.

2.05 Inspection Boat

The Contractor shall provide and maintain a suitable motor boat, with an operator or operators therefor, for the exclusive use by the Engineer in connection with the Work.

- The boat shall be enclosed and shall have the size, motor power and seaworthiness suitable for its intended use on rough open waters during strong weather events.
- The boat and boat operator shall be ready for use by the Engineer at all times that Work is in progress.
- Each individual boat operator shall be contactable by the Engineer whenever on shift.
- The boat shall have the ability to carry the weight of the boat operator and eight passengers within its

rated capacity.

- The boat shall be a minimum of 24 feet in length and with a beam of 8 feet. The motor shall have a minimum rating of 150 horsepower.
- A marine radio, life preservers, anchor, anchor and mooring lines, oars and oar locks, lights and other equipment as necessary to comply with marine regulations shall be provided and maintained in operating order by the Contractor.
- The Contractor shall be responsible for arrangements for berthing the boat when not in use.
- The Contractor shall provide and maintain suitable landing docks and steps to permit safe and easy access to the boat. Upon completion of the Work under this Contract, the boat and accessories shall remain the property of the Contractor.

The Contractor shall furnish the boat within 5 work days after written notification by the Construction Manager, and the boat shall, thereafter, be available at all times to the Construction Manager and other personnel authorized by the Construction Manager.

2.06 Tug Boat

The Contractor shall provide and maintain a suitable tug or push boat, with an operator or operators therefor, on site, 24 hours a day, capable of moving and responding to any situation on site with regards to waterfront construction or floating equipment. During normal on-shift operations, the Tug Boat may be assigned to construction; off-hours the Tug Boat is to remain on site and be dedicated to emergency response, security, and operation requiring off-hours Tug Boat operations. At no time shall this Tug Boat be assigned off-site without a replacement vessel on site capable of performing the requirements of this section.

- The vessel operator shall be contactable by the Engineer whenever on shift.
- The vessel shall have the ability to move any vessel or floating equipment on site.
- The vessel shall have the ability to respond to fires on the construction site.
- A marine radio, life preservers, anchor, anchor and mooring lines, oars and oar locks, lights and other equipment as necessary to comply with marine and towing regulations shall be provided and maintained in operating order by the Contractor.
- The Contractor shall be responsible for arrangements for berthing the boat on site, and providing facilities for the personnel at all times.
- The Contractor shall provide and maintain suitable landing docks and steps to permit safe and easy access to the boat. Upon completion of the Work under this Contract, the boat and accessories shall remain the property of the Contractor.

  The Contractor shall furnish the boat upon mobilization to the Project Site with any floating equipment or vessels, and the vessel shall, thereafter, be stationed and manned on site at all times through completion of the project or as otherwise directed by the Engineer. The vessel stationed on site shall be selected for its capability to maintain 24-hour operations, respond to any emergency within 30 minutes, and be capable of moving, securing, towing, and/or pushing any vessel on site, providing fire-fighting capabilities (fire pump and nozzle), and emergency evacuation of any waterfront facility or vessel.

3.0 METHOD OF MEASUREMENT

3.01 Waterfront Operations Facility

The Facility will be measured for payment as the number of months satisfactorily provided, measured to the nearest 0.25 months.

3.02 Inspection Boat

The Inspection Boat will be measured for payment on a monthly basis, measured to the nearest 0.25 months.

3.03 Tug Boat

The Tug Boat will be measured for payment on a monthly basis, measured to the nearest 0.25 months.

4.0 BASIS OF PAYMENT

4.01 Waterfront Operations Facility

The unit price bid per month for the Waterfront / Maritime Load-out facility shall include the cost of all Construction Management permits, USCG Approvals, labor, materials and equipment necessary to complete the work including but not limited to facilities construction, berthing and mooring infrastructure, vessel supply, equipment, field offices, utility charges and incidental expenses. Payment will be made for each month of availability where the facility actually supports the Project site.

No payment will be made under Waterfront Operations Facility for each calendar day during which there are deficiencies in compliance with these requirements. The first calendar day shall commence 24 hours after notice to the Contractor of such a deficiency. This nonpayment shall be deducted from the next contract payment. The amount of such calendar day nonpayment will be determined by dividing the unit price bid per month by 30.

Monthly payments may be terminated prior to contract Substantial Completion by written notification by the Engineer that such the Waterfront Operations Facility is no longer required on the contract.

4.02 Inspection Boat

The unit price bid per month shall include the cost of furnishing all labor, fuel, maintenance, repairs, registration permits, the operator, and other necessary incidentals for operation of the boat. A deduction of 1/30 of a month will be made for each 24- hour period, or portion thereof, during which the boat is unavailable to the Engineer, regardless of the reason for the boat's unavailability. Payment will begin the first month the boat is furnished and made available for use. Monthly payments may be terminated on a specified date prior to Substantial Completion by written notification by the Engineer that the Inspection Boat will no longer be required.

4.03 Tug Boat

The unit price bid per month shall include the cost of furnishing all labor, fuel, maintenance, repairs, registration permits, the crew, and other necessary incidentals for operation of the Tug Boat. A deduction of 1/30 of a month will be made for each 24- hour period, or portion thereof, during which the Tug Boat is unavailable, regardless of the reason for the boat's unavailability. Monthly payments may be terminated on a specified date prior to Substantial Completion by written notification by the Construction Manager that the Tug Boat will no longer be required. Payment will only be made for one Tug Boat at a given time.

Payment will be made under:

Item No.	Item	Pay Unit
ESCR-7.13 WF2	Inspection Boat	Month
ESCR-7.13 WF3	Tug Boat	Month
ESCR-7.13 WF4	Waterfront Operations Facility	Month

SECTION ESCR-10 – AIR QUALITY MONITORING

1.1 DESCRIPTION

A. This section specifies the procedures and requirements for Construction Air Quality Monitoring (AQM) and Reporting.

B. Prior to construction commencement, the Contractor must develop and implement a construction AQM plan that will measure air pollutant emissions at selected locations during construction activities. The air quality monitoring plan must be submitted to the Engineer for approval.

C. The AQM plan must specify the monitoring locations, the alert thresholds, the procedures for monitoring, the distribution list for regular air emissions data reports, the course of action for reporting and responding to exceedances of air quality alert thresholds, and maintenance protocols.

1.2 GENERAL REQUIREMENTS

A. It is expected that AQM during construction will be conducted in a minimum of six (6) locations or as determined by the Engineer. It is also expected that the AQM stations will be relocated as necessary during construction to reflect the sequence of construction, as approved and directed by the Engineer. The Contractor will also develop a distribution and action plan for the monitoring data.

B. AQM stations must be maintained to continuously record particulate matter concentrations and meteorological data on a real-time basis. Monitoring must be performed prior to the start of construction to obtain pre-construction background data.

C. Particulate matter ($PM_{2.5}$, and PM_{10}) must be collected continuously, 24-hours a day and 7 days a week, for the duration of the construction period. Meteorological data, which will include barometric pressure, humidity, precipitation, temperature, wind speed, and wind direction, must be collected from stations that include meteorological monitoring equipment.

D. The AQM stations must be configured to obtain the data averaged over 1-minute intervals, and the data will be used to record running 15-minute averages for particulate matter ($PM_{2.5}$ and PM_{10}) monitoring. These 15-minute averages must be compared with the background concentrations to monitor conformance with the applicable allowable limits which would be established as part of the AQM plan and determine any changes in air emissions levels due to construction activities.

E. Annual calibration and maintenance in conformance with the manufacturer's specifications must be conducted for the AQM and meteorological instrumentation.

1.3 AIR QUALITY REQUIREMENTS

A. Construction activity must not increase limits beyond the National Ambient Air Quality Standards.

B. Measures must be taken to reduce pollutant emissions during construction in accordance with all applicable laws, regulations, and building codes, including Local Law 77 of 2003 which requires the use of ULSD and best available technology (BAT):

C. Clean Fuel. Ultra Low Sulfur Diesel (ULSD) fuel must be used exclusively for all diesel engines throughout the construction site, including marine equipment.

D. Dust Control Measures. To minimize dust emissions from construction activities, a dust control plan including a robust watering program is required. This plan must include that all trucks hauling loose material must be equipped with tight-fitting tailgates and their loads securely covered prior to leaving the project area; water sprays must be used for all excavation and transfer of soils to ensure that materials will be dampened as necessary to avoid the suspension of dust into the air. Loose materials (e.g., on-site material storage piles) will be watered or covered. All construction-related dust reduction measures required by DEP's Construction Dust Rules will be implemented.

E. Idling Restriction. In accordance with Title 24, Chapter 1, Subchapter 7, Section 24-163 of the NYC Administrative Code, the local law restricting unnecessary idling on roadways, truck idle time must be restricted to three minutes except for those vehicles that are not using their engines to operate a loading, unloading, or processing device (e.g., concrete mixing trucks) or otherwise required for the proper operation of the engine.

F. Best Available Tailpipe Reduction Technologies. Nonroad diesel engines with a power rating of 50 hp or greater, and controlled truck fleets (i.e., truck fleets under long-term contract with the proposed project), including, but not limited to concrete mixing and pumping trucks, must utilize BAT for reducing diesel particulate matter emissions. Diesel particulate filters (DPFs) have been identified as being the tailpipe technology currently proven to have the highest emissions reduction capability and must be used on all nonroad diesel engines rated at 50 hp or greater, either installed by the original equipment manufacturer or retrofitted. Retrofitted DPFs must be verified by the EPA or the California Air Resources Board. Other technologies proven to achieve an equivalent emissions reduction may also be used.

G. Utilization of Newer Equipment. All nonroad construction equipment with a power rating of 50 hp or greater must meet at least the Tier 3 emissions standard.

H. Diesel Equipment Reduction. the Contractor's means and methods must minimize the use of diesel engines and utilize electric engines to the highest extent practicable. Equipment that should use electric engines in lieu of diesel engines includes, but may not be limited to, welders, compressors, and rebar benders.

1.4 SUBMISSION REQUIREMENTS

A. AQM plan for Engineer's approval.

B. Monthly reports of AQM results, including detailed air quality data at each monitoring location throughout each workday during the monitoring period.

1.5 MEASUREMENT

Air quality monitoring will be measured for payment as the number of months satisfactorily performed, mesured to the nearest month.

No payment will be made for periods where the air quality monitoring is not performed to the requirements of this section, the AQM plan, or as directed by the Engineer.

1.6 PRICE TO COVER

Theunit price bid per month must will incude the cost of furnishing all labor, maerials, equipment, insurance, and other necessary incidentals required to complete the work in accordance with the specifications and the directions of the Engineer.

Item No.	Item	Pay Unit
ESCR-10	AIR QUALITY MONITORING	MONTH

SECTION ESCR-11 – NOISE MONITORING

1.1 DESCRIPTION

A. This section specifies the procedures and requirements for Construction Noise Monitoring and Reporting.

B. Prior to the construction commencement, the Contractor must develop and implement a construction noise monitoring plan that will continously measure both equivalent (L_{eq}) and maximum (L_{max}) noise levels at selected locations during construction activities. The noise monitoring plan will provide measured noise levels during construction to determine whether construction-generated noise levels do/do not exceed the applicable limits on construction noise in the NYC Noise Control Code.

C. The noise monitoring plan must specify the proposed monitoring locations, the alert thresholds, the procedures for monitoring, a distribution list for regular noise data reports, the course of action for reporting and responding to exceedances of noise alert thresholds, and maintenance protocols. □

1.2 GENERAL REQUIREMENTS

A. It is expected that noise monitoring during construction will be conducted at a minimum of four (4) locations, or as required to document the noise requirements below, or as determined by the Engineer. It is also expected that the noise monitoring stations will be relocated as necessary to reflect the sequence of construction and more intensive noise emissions in accordance with the protocol and as directed by the Engineer. The Contractor will also develop a distribution and action plan for the monitoring data.

B. At each noise monitoring location, noise monitoring must be conducted using a Type I or Type II sound level meter that allows for wireless remote data transfer and is capable of measurements using the Fast or Slow time-weighting as described in the NYC Noise Control Code. In the event of construction-induced noise exceeding the alert threshold, a short audio recording must automatically be made, and an email alert must be sent to designated recipients. In the event that the permissible thresholds are repeatedly exceeded, the Contractor must re-evaluate and adjust the Contractor's construction methods before proceeding.

C. Noise monitoring must be performed as follows at each location:

1. Prior to the start of all construction activities to obtain baseline levels; and
2. During construction to continuously monitor conformance with allowable limits and determine any changes in noise levels due to construction activities.

1.3 NOISE REQUIREMENTS

A. Pile installation activities associated with the floodwall and closures structures that are within 50 feet of any residences, must produce no more than an 80 dBA Lmax noise level (i.e., sound pressure level) at a distance of 50 feet.

Pile installation activities, where feasible and practicable, must be limited to between the hours of 7 AM and 6 PM. This excludes any activities that need to occur adjacent to the FDR Drive where work needs to be conducted during night time as per DOT's OCMC requirements.

B. For construction activity that will occur during night-time (i.e., 6 PM to 7 AM) and weekend hours within 50 feet of any residence, the Leq(1) noise level resulting from construction

must not exceed 80 dBA as measured at the exterior façade of any residential dwelling unit.

C. Quieter equipment models for cranes, generators, compressors, and lifts that result in up to a reduction in noise levels may be necessary to achieve the noise requirements above.

D. Using barging for deliveries of construction materials (including concrete) and importing of fill to the project sites, rather than trucks on roadways to from the construction work areas may be necessary to achieve the noise requirements above.

E. Construction equipment that would operate on barges or within the river would be required to comply with all of the same regulations and commitments as on-land equipment that are subject to the New York City Noise Control Code.

1.4 SUBMISSION REQUIREMENTS

A. Noise monitoring plan for Engineer's approval.

B. Monthly reports of noise monitoring results, including detailed noise level data at each monitoring location throughout each workday during the monitoring period.

1.5 MEASUREMENT

Noise monitoring will be measured for payment as the number of months satisfactorily performed, mesured to the nearest month.

No payment will be made for periods where the noise monitoring is not performed to the requirements of this section, the noise monioring plan, or as directed by the Engineer.

1.6 PRICE TO COVER

Theunit price bid per month must will incude the cost of furnishing all labor, maerials, equipment, insurance, and other necessary incidentals required to complete the work in accordance with the specifications and the directions of the Engineer.

Item No.	Item	Pay Unit
ESCR-11	NOISE MONITORING	MONTH

SECTION ESCR-HW-901 – TEMPORARY PHASING MEASURES

ESCR-HW-901.1. DESCRIPTION.

This section describes the Contractor's responsibilities and obligations for temporary measures required in any and all work locations necessary due to the phased construction generally described by Contract Drawings PH001 – PH021 for the duration of the contract. This is in addition to any and all responsibilities and obligations in and around the site included as any other part of the Contract drawings and specifications.

The contractor is advised that the overall contract documents are intended to indicate the existing conditions of the work site, as well as to provide direction and details of construction for the final reconstruction. The contractor is hereby advised however that the work site and sequence of construction must be broken down into phases to allow the public to utilize a significant portion of the park, and its amenities, while construction in the closed sections is ongoing.

Contract Drawings PH001 – PH021 include a suggested phasing plan established to indicate one sequence of work that assures that the public has ready access to certain specific park amenities, as well as a targeted minimum percentage of open park space. The contractor shall, before any park related work begins, submit for approval his Site Specific Phasing plan for meeting these requirements. The contractor may, at his option, submit for approval an alternate or revised Site Specific Phasing plan differing from Contract Drawings PH001 – PH021 that meets the targeted goals. Note that this alternate or revised phasing plan may, or may not, be approved by the Engineer.

The Contractor's Site Specific Phasing Plan shall include specific details as to how park utilities shall be maintained both before, during and after construction takes place in each phase and at each location. Specifically, this utility phasing plan shall explicitly address how the contractor intends to maintain site irrigation, electric, plumbing, etc., in a manner that the open sections of the park, both before, during and after construction in each area, will function normally and safely and be maintained and operational in manner acceptable to the Engineer, Parks Department and the public.

The work under this Section shall include any and all work required to meet the phasing requirements indicated in the contract drawings and described in this section, and/or the Site Specific Phasing Plan submitted and proposed by the contractor and accepted by the Engineer.

The work under this Section includes but not is limited to the following:

1. Temporary measures, including the furnishing, installation, maintenance and removal of a temporary pedestrian bridge over the FDR Drive as necessary to maintain public access to open areas of the park and the Corlears Hook Ferry.
2. Any and all temporary fencing and secured access gates required due to specific phasing requirements
3. Temporary measures, including the delivery and installation of temporary walls and/or bracing, required due to the grade differences between Phases 1 and Phase 2.
4. Any and all temporary drainage structures in the existing or newly installed partial sewer systems required due to the phased construction. This includes but is not limited to temporary manholes, temporary bulkheads, fluming and pumping, etc.
5. Any and all temporary access required to both allow pedestrians to have access to open parks during Phases 1 and 2, and to provide and maintain any and all required contractor access to the work site.

6. Any and all temporary measures required to ensure that existing and newly installed park utilities, including but not limited to irrigation, electric, plumbing, outside utilities, sanitation and any and all additional utilities necessary to maintain a safe and operational park, are kept operational in a manner acceptable to the engineer, Parks Department and the generate public.

The Contractor is placed on notice that safe and clean access to parks and the Corlears Hook Ferry, both before, during and after any and all work under this contract, must be available to the public throughout all phases of the work and during all operations performed by the Contractor. Further, the Contractor is placed on notice that the monitoring by the City of the temporary measures required by this section is considered for the purposes of the contract to be a project objective necessary to eliminate and/or mitigate public disruption and inconvenience, and to ensure public health and safety. The Contractor shall therefore, at all times, conduct his operations in a manner which promotes clean and well-maintained Parks, and ensures the convenience, safety and health of general users consisting of, but not limited to, the motorist, the pedestrian and the abutting property owners/tenants, as well as those of the Contractor's employees.

The provisions of this section are supplementary to and do not abrogate the General Conditions (Section 1.06) or the General Notes on the Contract Drawings relating to the protection and cleanup of the site, and the delivery and storage of materials at the site. Furthermore, any conditions pertaining to the maintenance, protection, and cleanup of the construction site during the life of the contract which are addressed in the General Conditions and in the General Notes on the Contract Drawings, whether or not addressed under this Section, shall be deemed as having been addressed under this Section.

ESCR-HW-901.2 METHODS.

(A) GENERAL

Work under this Item shall start from the date of written notice to commence work or from the actual start of construction work, whichever is earlier.

The Contractor shall be responsible for the maintenance of the contract streets or portions of streets pursuant to Article 7 of the Standard Construction Contract.

The Contractor shall provide the necessary personnel, materials and equipment for all necessary temporary measures and equipment required by his phasing plan. The Contractor shall be fully responsible for maintaining all temporary measures in an acceptable condition and protecting the completed work until relieved of such responsibility by acceptance of the contract or the completed items of work.

(B) Corlears Hook Temporary Pedestrian Bridge

The Contractor shall provide the necessary personnel and equipment to provide a Corlears Hook Temporary Pedestrian Bridge for public access across the FDR drive to open areas of the site as well as the Corlears Hook Ferry through all phases of the work necessary for the removal and replacement of the existing Corlears Hook Bridge. Before the existing Corlears Hook Bridge is taken out of service and work for the replacement bridge is completed and the new bridge deemed open for public use, the contractor shall provide, maintain and remove a temporary pedestrian bridge to provide public access to open portions of the site as well as the Corlears Hook Ferry

across the FDR drive. Note that the utilization of the Montgomery street entrance into the site is specifically excluded as an acceptable means of providing the necessary ferry access.

This work consists of the design (as applicable), furnishing, rental, installation, maintenance and removal of a 10 foot wide prefabricated modular temporary pedestrian bridge, complete, including all columns, lighting, stairs, etc., as needed, with a service life of at least 60 months. Note that the work shall include regrading and temporary paving as necessary to provide ADA access to both sides of the bridge. The location of the bridge is as generally shown on the suggested phasing drawings with the specific location and installation details to be submitted by the contractor to the Engineer for approval. The work shall also include restoration of the area and maintenance and protection of pedestrian traffic in the temporary sidewalk area. This work is also includes the construction, maintenance, operation (including providing energy) and removal of the temporary lighting system. The design pedestrian live load for the temporary bridge must not be less than 90 PSF. The temporary bridge must be ADA compliant, including handrails.

The contractor is responsible to obtain any and all NYCDOT permits required to install and remove the temporary pedestrian bridge.

The Contractor shall submit to the Engineer for review and approval in advance of any work all necessary details regarding the temporary pedestrian bridge, including manufacturer, design, fabrication, installation and removal and restoration, for review and approval before site work begins The manufacturer shall provide examples of similar projects where temporary pedestrian bridges of the similar size, span and type required by this contract were successfully utilized.

(C) Temporary Measures Required by Phasing

The Contractor shall provide the necessary material, personnel and equipment required in any and all work locations necessary due to the phased construction indicated in the Contract documents and in conformance with the Contractor's s Site Specific Phasing Plan. Those work items of work required include but are not limited to the following:

(i) Temporary Phasing Fencing

In order that the Contractor shall maintain all areas at the work site in such a condition and conduct operations in such a manner that the public can navigate near and thru (as required) the work site significant temporary fencing shall be required. This fencing shall be placed along the shared use path, between open and under construction areas required by the specific phasing requirements and accepted, to provide a safe and designated walking path from the Corlears Hook ferry to the Corlears hooks temporary pedestrian bridge across the FDR drive, and any and all other areas that fencing is deemed by the Engineer to be required by the contractors' specific work and phasing plan. The Contractor shall submit to the Engineer for review and approval in advance of any work his specific fencing and gate plan for review and approval before site work begins. The fencing shall be moved, relocated, expanded and/ or reduced as deemed necessary. The fencing required under this section shall provide a physical barrier to safely separate the public and the contractor's operations, such as shielded fending, concrete barrier and/or plywood enclosures. The specific details of the fencing shall be included as part of the fencing plan noted above.

This temporary fencing shall also include the installation, removal and staffing of all access gates into and out of the site. These gates shall be secured at all times and staffed around the clock in such a manner that other contractors, parks department personnel and all emergency responders shall have immediate access when required.

(ii) Temporary Phasing Drainage Structures

The Contractor shall be responsible for the continued operations of all existing drainage structures during the work under this contract until such time that their replacement, if any, is complete and new drainage flow and routes are established. The Contractor's phasing plan may result in the need to install, maintain and removed temporary drainage structures to meet this requirements. These temporary structures include but are not limited to temporary bulkheads, fluming, temporary manholes, etc.

(iii) Temporary Support and/or Walls Due to Phase Grade Differentials.

The Contractor's Site Specific phasing plan may result in significant grade differentials between those areas closed and under construction and those areas open to the public. Temporary walls and or other measures separating these areas and accounting for the required grade changes shall be constructed and maintained by the contractor. These measures shall serve to accommodate the grade changes, safeguard the public from entering the work site, minimize noise and dust infiltration into the open park areas.

The contractor shall submit for approval his specific means and measures for accommodating the grade changes and safeguarding and protecting the site for review and approval. The plan shall include the specific materials to be utilized, as well as all necessary installation and removal procedures during each phase. Dependent upon the type, location and size of the temporary structures the contractor may request and the Engineer will consider if the wall can be left in place in whole or in part. Any revisions or alteration to the temporary wall required to obtain approval for it to be left in place shall be made by the contractor at no increase in cost to the city.

(iv) Temporary Measures (paths, lighting, ramps, etc.,) to Provide Public Site Access.

As indicated in the contract drawings, certain areas and functions within the Park shall remain open and available to the public at various stages of the work. The Contractor's site specific phasing plan shall indicate and the contractor shall implement those measures necessary to assure that the public has adequate, safe and code compliant access to all open park areas during all phases of the work. This shall include temporary lighting as required by the contractor's specific demolition and removal sequence.

This public access measures must also specifically ensure that the public has reasonable access to sanitary facilities, either existing, reconstructed or temporary, during all phases of the work. Any temporary sanitary facilities provided by the Contractor to meet this requirement shall be cleaned, maintained and serviced as needed and as directed by the Engineer and shall be at a minimum equal to the existing services in that area.

(v) Temporary Measures to Maintain Exiting Park Utilities

The contractor's site specific phasing plan must include specific details as to how park utilities shall be maintained both before and after construction takes place in each phase and at each location. This utility phasing plan shall specifically address how the contractor intends to maintain site irrigation, electric, plumbing, etc., in a manner that the open sections of the park, both before and after construction starts in each area, will function normally and safely and be maintained and operational in manner acceptable to the public.

(vi) Temporary Measures to Maintain General Site access

The contractor's site specific phasing plan shall include all measures necessary to assure that the contractor, as well as contractor's working on adjacent work areas, and any and all emergency vehicles, shall have safe access to the site both before and after the work required under this contract. These measures shall specifically include temporary paving, and subsequent maintenance, of the shared use construction path. This shall also include the installation, removal

and staffing of all access gates into and out of the site as well as any and all Contractor proposed temporary entrance and exit ramps into the site other than those indicated on the contract drawings. Note that all access gates shall be secured and manned 24 hours a day, 7 days a week in a manner to insure that other contractors and any and all emergency or city maintenance vehicles have ready and unencumbered access to the site at all times.

(vii) Additional measures

The contractor shall perform any and all necessary work required to maintain the work site and all open park areas and amenities in a safe and secure manner, and in conformance with all applicable rules and regulations, regardless of those items explicitly included above and as directed by the Engineer.

ESCR-HW-901.3. NONCONFORMANCE.

No payment will be made under Items ESCR-HW-901 or ESCR-8.07 for each calendar day during which there are deficiencies in compliance with the foregoing specification requirements, as determined by the Engineer and made evident by the Engineer's failure to sign documents each day approving payment to be made under this item.

If the Contractor fails to maintain any and all of the items of work required by Items ESCR-HW-901 or ESCR-8.07 or any portion thereof, adequately and safely for a period of three (3) or more consecutive hours, the Engineer may correct the adverse conditions by any means deemed appropriate, including, but not limited to, "outside services," and shall deduct the cost of the corrective work from any monies due the Contractor. The cost of this work shall be in addition to the nonpayment for site maintenance listed above.

However, where continued nonconformance with the requirements of this specification is noted by the Engineer, and prompt Contractor compliance is deemed not to be obtainable, all contract work may be stopped by direct order of the Engineer, regardless of whether corrections are made by the Engineer as stated in the paragraph above. Any delays caused by such stoppage(s) will be the sole responsibility of the contractor.

Furthermore, in addition to the remedies specified above, in the event the Contractor shall fail to comply, within three (3) consecutive hours after written notice from the Engineer, with the requirements of the contract and the specifications in the matter of providing facilities and services for the maintenance, protection and cleanup of the construction site, the Contractor shall pay to the City of New York, until such notice has been complied with or rescinded, the sum shown per calendar day in Schedule A, for each instance of such failure, as liquidated damages and not as a penalty, for such default.

Any money due the City of New York under this provision shall be deducted from the amounts due or to become due to the Contractor for work performed under the contract.

ESCR-HW-901.4. MEASUREMENT.

(A) Temporary Pedestrian Bridge (Lump Sum)

The unit price bid for procuring, delivering, installing, removing and maintaining the Temporary Pedestrian Bridge must include the cost of furnishing all labor, materials, plant, equipment, insurance and incidentals required to provide safe and ready access to the site as described above, and in accordance with the directions of the Engineer. Payment for the temporary pedestrian bridge shall be made in accordance with a lump sum breakdown provided by the Contractor and deemed acceptable to the Engineer.

(B) Temporary Measures Required by Phasing (Lump Sum)

The unit price bid for Installing, maintaining and removing(as necessary) any and all temporary measures required by phasing shall include the cost of furnishing all labor, materials, plant, equipment, insurance and incidentals required to perform the services noted above and as directed by the Engineer. Payment will be made in proportion to the percentage of actual contract completion based upon the original contract value. Measurement for this item shall not begin until actual construction work is started at the site.

ESCR-HW-901.5. PRICE TO COVER.

(A) Temporary Pedestrian Bridge (Lump Sum)

The unit price bid for installing and removing the Temporary Pedestrian Bridge shall include the cost of furnishing all labor, materials, plant, equipment, insurance and incidentals required to provide safe and ready access to the site as described above, and in accordance with the directions of the Engineer.

(B) Temporary Measures Required by Phasing (Lump Sum)

The unit price bid for Temporary Measures Required by Phasing shall include the cost of furnishing all labor, materials, plant, equipment, insurance and incidentals required to perform the services noted above, to provide safe and ready access to and maintenance of the site as described above, and in accordance with the directions of the Engineer.

Where no separate item is provided for this work, the cost thereof shall be deemed to be included under all scheduled items.

Payment will be made under:

Item No.	Item	Pay Unit
ESCR-8.07	Temporary Pedestrian Bridge	Lump Sum
ESCR-HW-901	Temporary Measures Required by Phasing	Lump Sum

S - PAGES

SPECIAL PROVISIONS

NOTICE

THE PAGES CONTAINED HEREIN (S-PAGES) ARE GENERAL SPECIAL PROVISIONS AND PROJECT SPECIFIC PROVISIONS THAT SHALL APPLY TO AND BECOME A PART OF THE CONTRACT.

(NO TEXT ON THIS PAGE)

(A) GENERAL SPECIAL PROVISIONS

TABLE OF CONTENTS

ARTICLE	DESCRIPTION	PAGE NO.
A1	LINES AND GRADES	S-4
A2	SPECIFIC TRAFFIC STIPULATIONS	S-4
A3	HOLIDAYS CONSTRUCTION EMBARGO	S-4
A4	CONTRACT ITEMS THAT INCLUDE BACKFILL AS PART OF THEIR WORK	S-5
A5	ACCELERATED PROJECT SCHEDULE AND COMBINATION OF STAGES	S-5
A6	DISPOSAL OF EXCESS EXCAVATED MATERIAL	S-5
A7	NO EXTENSIONS OF TIME FOR WINTER SHUT-DOWN	S-5
A8	PRIVATE UTILITY HARDWARE ADJUSTMENTS	S-5
A9	SURVEY MONUMENTS	S-6
A10	RESTORATION OF ADJACENT AREAS	S-6
A11	USE OF CITY WATER	S-6
A12	ITEM NO. “6.52 FED”	S-6
A13	FUEL COST	S-6
A14	DPR CONSTRUCTION PERMITS	S-6
A15	START OF CONTRACT WORK	S-6
A16	N.Y.C. TRANSIT INSURANCE	S-6
A17	TREE BARRIERS	S-9
A18	UTILITIES	S-9
A19	HOUSE CONNECTIONS	S-9
A20	VICTAULIC STYLE 77 COUPING	S-9
A21	STREET LIGHT AND TRAFFIC SIGNAL	S-10
A22	SAW CUT	S-10

A23	PRE-CONSTRUCTION STAGE	S-10
A24	EXISTING SEWERS. WATER AND APPURTENANCE	S-10
A25	RECONNECTING EXISTING SEWERS TO NEW MANHOLES	S-10
A26	THE CONTRACTOR IS ADVISED	S-11
A27	THE CONTRACTOR IS ADVISED	S-11
A28	NO ADDITIONAL PAYMENT	S-11
A29	SHEETING AND EXCAVATION AT TRANSIT FACILITIES	S-11
A30	ARCHEOLOGICAL DISCOVERIES	S-11
A31	PRICES TO INCLUDE	S-12

(NO TEXT ON THIS PAGE)

(A) GENERAL SPECIAL PROVISIONS

A1. LINES AND GRADES. The Contractor shall furnish lines and grades in accordance with Section 1.06.27 of the NYCDOT Standard Highway Specifications, except that survey controls established for this project may no longer exist and the Contractor shall be required to re-establish the survey control information using official Borough Survey Control Monuments and Bench Marks, where they exist. The Contractor shall check with Topographic Section of the Borough President's Office as to the reliability and accuracy of the data to be used for lines and grades.

A2. SPECIFIC TRAFFIC STIPULATIONS. Under this contract, the Contractor shall perform the work in strict accordance with the requirements of Section 6.70 in the Standard Highway Specifications, specific traffic stipulations as called for on the plans, OCMC Traffic Stipulations attached to the end of these Special Provisions, and the directions of the Engineer. In case of a conflict, the Engineer's decision shall be final.

In addition, the cost of compliance with requirements of the OCMC Traffic Stipulations, unless otherwise provided for, shall be deemed included in the prices bid for all scheduled items.

In addition to the requirements provided in the OCMC Traffic Stipulations, Traffic Enforcement Agents (TEA) are required as follows:

1. Full closures of the FDR Drive northbound or southbound: TEA at 38 locations per closure, with one TEA per location. Locations to be confirmed with the Engineer prior to the Contractor's submission of MPT plans for approval by the Engineer.
2. All other closures, including partial closures of the FDR Drive: No TEA are anticipated to be required.

A3. HOLIDAY CONSTRUCTION EMBARGO. A special Holiday Construction Embargo shall be in effect on the Friday of the week preceding Thanksgiving Day week from 6:00 AM to 11:59 PM and again from the Monday of Thanksgiving Day week from 6:00 AM through January 2, at 11:59 PM. Roadway and sidewalk construction activities will be restricted during the embargo period on the streets listed below*.

Any permits issued prior to the date of this notice, for work during this embargo period on the streets listed below which do not already have the permit stipulation "410" are hereby suspended for the period noted above. All permittees must comply with this embargo unless a special waiver is granted by OCMC. Waiver requests must be
filed at least thirteen days before Thanksgiving Day, in the Permit Office by filing a "Request for Roadway/Sidewalk Permits During
"Embargo Periods" and submitting supporting documentation. Waiver requests should only be submitted for critical reasons for a specific project. If a waiver is granted, the applicant will be notified so they can apply for the approved permits. Waivers **are not** required for ongoing Building Construction Activity Permits which already include the "410" permit stipulation. Waiver request forms may be obtained at any Permit Office or on the Department of Transportation's website at: **http://www.nyc.gov/html/dot/downloads/pdf/holidayembapp.pdf**

Prior to this embargo period all necessary measures must be taken so that all roadways and sidewalks are in proper condition to allow for the expeditious and safe movement of vehicular, bicycle and pedestrian traffic. Tool carts, cable reels, containers, and material stored on roadways must be removed during the embargo period.

The opening of utility access covers is prohibited on any of the streets noted below between the hours of 6:00 AM and midnight unless the utility or Contractor files for an Emergency Authorization Number as required by section 2-07 of the Department of Transportation's Highway Rules. The planned opening of utility access covers may occur during the hours of 12:01 AM and 5:59 AM where no authorization number is required.

Temporary restoration of the streets and sidewalks and removal thereof, if required for the Holiday Embargo period, will be paid for under the appropriate scheduled items.

No extension of time due to the shutdown period will be granted to the Contractor for completion of the work.

*** Please note that this embargo only applies to NYCDOT construction permits.**
*** List of street and maps of the affected locations are available by borough on the Department of Transportation's website at:**
http://www.nyc.gov/html/dot/html/motorist/trafalrt.shtml

A4. CONTRACT ITEMS THAT INCLUDE BACKFILL AS A PART OF THEIR WORK. The following shall pertain to all contract items that have backfill as a part of their work: Backfilling shall comply with Subsection 4.11.3 of the Standard Specifications and no additional payment will be made for any Highway or Street Lighting work item requiring Contractor to furnish additional fill material to meet these requirements when backfilling.

A5. ACCELERATED PROJECT SCHEDULE AND COMBINATION OF STAGES. Contractor shall plan and/or stage the Contractor's work schedule using all hours/days available. Contractor is advised that all applicable unit prices shall include, for the purpose of this contract, all overtime costs, premium time costs, shift differentials required to complete construction within the specified "Time(s) of Completion" stipulated in this contract.

Contractor shall be permitted to accelerate this project, to combine stages and/or work sequences. Any such changes shall be shown in the construction schedule, to be furnished in accordance with the General Provisions of the Standard Specifications and the "CRITICAL PATH METHOD (CPM) SCHEDULE" Article and shall be submitted for approval of the Engineer.

A6. DISPOSAL OF EXCESS EXCAVATED MATERIAL. All excess excavated material, with the exception of contaminated material, shall become the property of the Contractor and shall be properly disposed of away from the site, at the Contractor's expense. Contaminated material shall be disposed of separately in accordance with contract requirements.

A7. NO EXTENSION OF TIME FOR WINTER SHUT-DOWN. Where the Contractor's approved work schedule for installing sidewalk, curb, roadway base and/or pavement falls within the winter period of December 1st through April 1st, the Contractor will NOT be granted an extension of time for completion of this contract due to the winter shut-down period, unless otherwise provided in Schedule A.

A8. PRIVATE UTILITY HARDWARE ADJUSTMENTS. will be performed by the owning utility company or its agent, at its expense. The Contractor shall notify the utility company 72 hours prior to start of work at each location where its hardware requires adjustment.

A9. SURVEY MONUMENTS. When working in the vicinity of survey monument the Contractor shall hand excavate per Item 8.02 A and 8.02 B at City Survey Monuments, for a distance of five (5) feet around each monument, as directed by the Engineer.

A10. RESTORATION OF ADJACENT AREAS. The Contractor shall be required to remove all form work. In planting strip areas, the Contractor shall be required to restore areas damaged as a result of the Contractor's operations, to the satisfaction of the Engineer, with sod. The Contractor shall also, as directed by the Engineer, make safe adjacent areas to the Contractor's work, such as: restoring missing or damaged pavement markings that were removed or damaged as a result of the Contractor's operations (as per requirements of Section 6.44 in the Standard Specifications); resetting granite blocks in tree pits; and, applying asphaltic concrete mixture (Item 4.02 CB) where badly broken sidewalk or curb may create a dangerous condition just outside the Contractor's area of operation, where and when directed by the Engineer.

All restoration work shall be done to the satisfaction of the Engineer.

A11. USE OF CITY WATER. The Contractor is notified that for use of City water under this project the Contractor shall be required to obtain a water use permit from the Department of Environmental Protection at the Contractor's own cost.

A12. ITEM NO. "6.52 FED". The contractor is notified that wherever the Item No. "6.52 CG" and words "Crossing Guard" are used in the Contract Documents and Drawings it shall mean the Item No. "6.52 FED" and the words "Uniformed Flagperson", respectively.

A13. FUEL COST. The Contractor is notified that the fuel cost per gallon used in the formula under Sub-Article 26.2.8 of the Standard Construction Contract for **Extra Work** will be derived from the fuel price index for the United States East Coast published weekly by the United States Energy Information Administration ("USEIA"), and available on its website at http://www.eia.gov/petroleum/gasdiesel/. The USEIA-published cost per gallon for the applicable fuel on the East Coast for the week in which the first day of each calendar quarter during the contract term occurs (i.e., January 1st, April 1st, July 1st and September 1st) will be used in the reimbursement formula for all **Extra Work** invoiced that was performed during that calendar quarter. Should the USEIA stop publishing this fuel price index, the fuel cost per gallon will be determined by reference to a substitute index to be agreed upon by the Contractor and the City. Fuel reimbursed under the method described in this article is not eligible for the Fuel Price Adjustment payment under Item 698.05.

A14. DPR CONSTRUCTION PERMITS. NYC Department of Parks and Recreation (DPR) Construction Permits are required for all work on parkland or on sidewalks adjacent to parks or other areas maintained by DPR.

A15. START OF CONTRACT WORK. The Contractor is notified that a Notice To Proceed (NTP) date will be issued for work to commence within 21 to 30 Days of Contract Registration.

A16. N.Y.C. TRANSIT INSURANCE. The Contractor (Permittee) shall indemnify and save harmless the City of New York and the New York City Transit (Permittor) in accordance with the following "Insurance Requirements" and proof that the necessary insurance is in effect will be required before work can commence:

NYCT "OUTSIDE CONTRACT" INSURANCE REQUIREMENTS

1. The Permittee at its sole cost and expense shall carry or cause to carried and shall maintain at all times during the period of performance under this Agreement policies of insurance as herein below set forth below:

(A) Workers' Compensation Insurance (including Employer's Liability Insurance) with limits as specified in Schedule A, which limit may be met by a combination of primary and excess insurance meeting the statutory limits of New York State. The policy shall be endorsed to include Longshoreman's and Harbor Workers' Compensation Act/Maritime Coverage Endorsement and/or Jones Act Endorsement when applicable.

(B) Commercial General Liability Insurance (I.S.O. 2001 Form or equivalent) approved by Permittor in the Permittee's name with limits of liability as specified in Schedule A for each occurrence on a combined single limit basis for injuries to persons (including death) and damages to property. The limits may be provided in the form of a primary policy or combination of primary and umbrella/excess policy. When the minimum contract amounts can only be met when applying the umbrella/excess policy; the Umbrella/Excess Policy must follow form of the underlying policy and be extended to "drop down" to become primary in the event primary limits are reduced or aggregate limits are exhausted. Such insurance shall be primary and non-contributory to any other valid and collectable insurance and must be exhausted before implicating any Permittor/MTA policy available.

Such policy should be written on an occurrence form; and shall include:

- Contractual coverage for liability assumed by the Permittee under this agreement;
- Personal and Advertising Injury Coverage;
- Products-Completed. Operations;
- Independent Contractors Coverage;
- "XCU" coverage (Explosion, Collapse, and Underground Hazards) where necessary;
- Contractual Liability Exclusion, applicable to construction or demolition operations to be performed within 50 feet of railroad tracks, must be voided, where necessary; and,
- Additional Insured Endorsement (I.S.O. Form CG 20 26 07/04 version or equivalent) approved the Permittor naming:

New York City Transit Authority (NYCTA), the Manhattan and Bronx Surface Transit Operating Authority (MaBSTOA), the Staten Island Rapid Transit Operating Authority (SlRTOA), MTA Capital Construction Co., the Metropolitan Transportation Authority (MTA) including its subsidiaries and affiliates, and the City of New York (as Owner).

(C) Business Automobile Liability Insurance Policy - (I.S.O. Form CA 00 01 10 01 or equivalent) approved by the Permittor is required if Permitee's vehicle enters Permittor property. The insurance must be in the name of the Permittee or its contractor entering the Permittor property with limits of liability in the amount specified in Schedule A for claims for bodily injuries (including death) to persons and for damage to property arising out of the ownership, maintenance or use of any owned, hired or non-owned motor vehicle.

(D) Railroad Protective Liability Insurance policy shall be required as specified in Schedule A.

(E) Environmental/Pollution Exposures In the event environmental or pollution exposures exist, the Permittee shall require the environmental contractor or sub-contactor to provide the applicable insurance covering such exposure. The limits and type of insurance provided shall be satisfactory to the Permittor and will be confirmed to the parties prior to the start of the work.

2. General Requirements Applicable to Insurance Policies

(a) All of the insurance required by this Article shall be with Companies licensed or authorized to do business in the State of New York with an A.M. Best Company rating of not less than A-/VII or better and reasonably approved by the *Permittor/MTA and shall deliver evidence of such policies.*

(b) Except for Workers Compensation, all references to forms and coverages referred to above shall be the most recent used by the Insurance Services Office, Inc. (ISO") or equivalent forms approved by the Insurance Department of the State of New York, provided, however, that excess coverages may be written on forms reasonably acceptable to Permittor containing provisions other than those contained in ISO forms but otherwise conforming in substance to the requirements of this Article.

(c) The Permittee or its Contractor performing the work shall furnish evidence of all policies before any work is started to the permittor using the following link

https://us.marketplace.asite.com/marketplace/main/detail/28/1/1/5512158/forms

These policies must: (i) be written in accordance with the requirements of the paragraphs above, as applicable; (ii) be endorsed in form acceptable to include a provision that the policy will not be canceled, materially changed, or not renewed, unless otherwise indicated herein, at least thirty (30) days prior written notice to the Permittor c/o MTA Risk and Insurance Management (MTA RIM) Department – Standards, Enforcement & Claims Unit, 2 Broadway – 21st floor, New York, NY 10004; and (iii) state or be endorsed to provide that the coverage afforded under the contractor's policies shall apply on a primary and not on an excess or contributing basis with any policies which may be available to the Permittor/MTA, and also that the contractor's policies, primary and excess, must be exhausted before implicating any Permittor/MTA policy available. (iv) In addition, contractor's policies shall state or be endorsed to provide that, if a subcontractor's policy contains any provision that may adversely affect whether contractor's policies are primary and must be exhausted before implicating any Permittor/MTA policy available, contractor's and subcontractor's policies shall nevertheless be primary and must be exhausted before implicating any Permittor/MTA policy available. Except for Professional Liability, policies written on claims made basis are not acceptable. At least two (2) weeks prior to the expiration of the policies, contractor shall endeavor to provide evidence of renewal or replacement policies of insurance, with terms and limits no less favorable than the expiring policies. Except as otherwise indicated in the detailed coverage paragraphs below, self-insured retentions and policy deductibles shall not exceed $100,000, unless such increased deductible or retention is approved by Permittor/MTA. The Permittee shall be responsible for all claim expense and loss payments within the deductible or self-insured retention. The insurance monetary limits required herein may be met through the combined use of the insured's primary and umbrella/excess policies.

(d) Certificates of Insurance may be supplied as evidence of policies of the above policies, except for Policy (D) Railroad Protective Liability Insurance Policy. However, if requested by the Permittor, the Permittee shall deliver to the Authority, within forty-five (45) days of be request, a copy of such policies, certified by the insurance carrier as being true and complete. The Railroad Protective Liability Insurance Policy must be provided in the form of the Original Policy. A detailed Insurance Binder may be provided, ACORD or Manuscript Form, pending issuance of the Original Policy. The Original Policy must be submitted to MTA RIM within 30 days of the Binder Approval.

(e) If a Certificate of Insurance is submitted, it must: (1) be provided on the Permittor Certificate of Insurance Form or MTA Certificate of Insurance Form for Joint Agency Agreements; (2) be signed by an authorized representative of the insurance carrier or producer and notarized; {3) disclose any deductible, self-insured retention, sub-limit, aggregate limit or any exclusions to the policy that materially change the coverage; (4) indicate the Additional Insureds and Named Insureds as required herein, along with a physical copy of the Additional Insured Endorsement (I.S.O. Form CG 20 26 07/04 version or equivalent), as applicable and the endorsement(s) must include policy number(s); (5) reference the Contract by number on the face of the certificate; and (6) expressly reference the inclusion of all required endorsements.

(f) The minimum amounts of insurance required in the detail description of policies (A), (B), (C), and (D) above shall not be construed to limit the extent of the Permittee's liability under this Agreement.

(g) If, at any time during the period of this Agreement, insurance as required is not in effect, or proof thereof is not provided to the Permittor, the Permittor shall have the options to:

(i) direct the Permittee to suspend work or operation with no additional cost or extension of time due on account thereof; or
(ii) (ii) treat such failure as an Event of Default.

A17. TREE BARRIERS. The Contractor shall furnish, install, maintain and subsequently remove temporary Protective Tree Barriers. Protective Tree Barriers shall be Type B, unless otherwise directed by the Engineer, and shall be constructed and installed as shown on the Protective Tree Barrier sketch in Department Of Transportation, Standard Highway Details Of Construction, Drawing No. H-1046A, as directed by the Engineer, and in accordance with Department of Parks and Recreation requirements.

Price of the tree barriers must be deemed included in the in the unit prices bid for all scheduled items.

A18. UTILITIES. All utility locations and invert elevations are not guaranteed, nor is there any guarantee that all existing utilities, whether functional or abandoned within the project area are shown.

A19. HOUSE CONNECTIONS. All existing house connections shall be maintained and supported during construction. The Contractor shall replace any existing house connection damaged as a result of the Contractor's construction operations as ordered by the Engineer at no cost to the City.

A20. VICTAULIC STYLE 77 COUPLING. The Contractor is notified that Victaulic Style 77 Coupling is no longer acceptable for use in any steel water main work. All reference to Victaulic Style 77 Coupling within the Standard Sewer And Water Main Specifications of the Department of Environmental Protection (dated July 1, 2014), the Water Main Standard Drawings of the Department of Environmental

Protection (latest revisions), the Specifications For Trunk Main Work (dated July 2014), and the contract drawings, shall be replaced with Bolted Split-Sleeve Restrained Coupling.

A21. STREET LIGHT AND TRAFFIC SIGNAL. The Contractor is responsible for any damage to the existing street lighting and traffic signal equipment, including underground conduits and the safety of both pedestrian and vehicular traffic for the duration of the contract.

Should any conduits, cables or foundations need repair due to the Contractor's negligent operations during construction, all work shall be performed according to NYCDOT Bureau of Traffic's Standard Drawings and Specifications and City of New York DOT System Engineering Specifications (dated November 2013) at the sole expense of the Contractor.

It is the Contractor's responsibility to secure an approved electrical contractor to perform all traffic signal work (if any). For list of approved electrical contractors, contact Mr. Michael R. LeFosse of New York City Department of Transportation at (212) 839-3799.

A22. SAW CUT. The Contractor is advised that where the existing roadway pavement is designated to be replaced from curb to curb, then no full depth saw cutting of pavement for sewer and water main trenches will be required, except at the limits of full width pavement restoration. No separate or additional payment will be made for any saw cutting.

A23. PRE-CONSTRUCTION STAGE. The Contractor is advised that the Base Contract Duration (consecutive calendar days "ccds") must also include pre-construction stage from the Notice To Proceed date. During this stage the contractor is required to submit the necessary shop drawings, obtain all permits and submit the health and safety plan for review and approval. The Engineer's field office will also need to be established during this pre-construction stage period. Failure to comply with the pre-construction stage requirements may result in assessing liquidated damages to the contractor for everyday beyond the pre-construction stage duration. The liquidated damage will be of equivalent value as identified in the Schedule A for work beyond the construction completion date.

A24. EXISTING SEWERS, WATER AND APPURTENANCE. The Contractor is notified that at some locations there may exists sewers, manholes, water mains, etc., which are to remain undisturbed and are in close proximity to the line of the proposed work. The Contractor shall exercise extreme care, minimize the trench width of the proposed sewers and take all necessary precautions in placing sheeting and during excavation of the trenches to prevent any damage to the existing structures, pavement, curbs, and sidewalks that are to remain while working adjacent to them. The Contractor maybe restricted to use wood sheeting at certain critical locations as directed by the Engineer. Should any damage occur to any portion of the existing structures that are to remain due to the Contractor's operations, the Contractor shall make all repairs to the existing structures to the satisfaction of and as directed by the Engineer. The cost of such repair shall be borne by the Contractor, at no cost to the City. Additional cost to use wood sheeting specifically to ensure integrity of existing sewer structures will be deem included in all bid items for work.

A25. RECONNECTING EXISTING SEWERS TO NEW MANHOLES. If there are locations on the contract plans, where the Contractor is required to reconnect all existing sewers to the proposed manholes in this contract. The said manholes shall be fabricated to provide openings for the existing sewers at the specified invert elevations as shown on the contract drawings. The cost of reconnecting existing sewer pipes to new manholes, including concrete collar with steel reinforcements and/or grouting around the existing sewer pipes at the openings and all work necessary to complete the pipe reconnection, to the satisfaction of the Resident Engineer shall be deemed included in the prices bid for all items of work. No additional payment shall be made.

A26. THE CONTRACTOR IS ADVISED that during pre-construction stage from the Notice To Proceed date; the contractor is required to submit the necessary shop drawings, obtain permits and submit the health and safety plan for review and approval. The Engineer's field office will also need to be established during this pre-construction stage period. Failure to comply with the pre-construction stage requirements may result in assessing liquidated damages to the contractor for everyday beyond the pre-construction stage duration. The liquidated damage will be of equivalent value as identified in the Schedule A for work beyond the construction completion date.

A27. THE CONTRACTOR IS ADVISED that any City owned light poles, traffic signals, street name signs, traffic signs and encumbrances including, but not limited to, underground conduit displaced as the result of the installation of the new sewers, water mains, catch basins, catch basin connections and appurtenances shall be replaced in kind and as directed by the Engineer. The cost of such work shall be deemed included in the prices bid for all items of work under this contract.

A28. NO ADDITIONAL PAYMENT. The Contractor is advised that any fences, guardrails, boulders, asphalt walkway of the park, fixtures, other encumbrances removed within project limits during construction shall be replaced in kind to the satisfaction of the Engineer. The cost of such work shall be deemed included in the prices bid for all contract items of work and no additional or separate payment shall be made.

A29. SHEETING AND EXCAVATION AT TRANSIT FACILITIES. In case of transit facilities like MTA, LIRR, METRO NORTH etc., the Contractor shall exercise extreme caution and take all necessary precautions in placing sheeting and excavation to prevent any damage to the existing underground or overhead structures and its appurtenances during construction work throughout the project area. The Contractor must take full responsibility to protect the said structures and its appurtenances and any damage caused by the Contractor's operations ~~shall~~ must be made good by the Contractor to the satisfaction of the Engineer at no additional cost to the City.

The Contractor shall submit shop drawings to the Transit facilities showing all the details and methods of construction, such as, sheeting and bracing, including the Contractor's procedure and sequence of construction, supporting and/or protection of the existing structures and its appurtenances, with necessary design calculations for approval prior to starting of the construction. The design shall be made by a New York State Licensed Professional Engineer skilled in this type of construction and as further evidenced by the imprint of Professional Engineer's seal and signature on all drawings. The cost of this work shall be deemed included in the price bid for all items of work under this contract.

A30. ARCHAEOLOGICAL DISCOVERIES. The Contractor is notified that the Resident Engineer will retain the services of an Archaeologist (the "City's Archaeologist") for this project.

The City's Archaeologist shall be notified in advance and shall be present on site during sub-surface excavations as the City's Archaeologist deems necessary. The City's Archaeologist shall be authorized to halt construction at any time in order to record and/or recover any archaeological resources encountered during excavations, and to stabilize in place any human remains encountered. For the purpose of evaluating and recording archaeological resources, the City's Archaeologist shall be allowed to enter trenches provided all standard safety requirements are met. It is understood that some construction down time may be necessary.

In the event that human remains and/or other significant archaeological deposits are encountered during construction or archaeological investigations, Landmarks Preservation Commission (LPC) shall be notified as directed by the City's Archaeologist and the State Historic Preservation Office (SHPO) requires that the following protocol is implemented:

- At all times human remains must be treated with the utmost dignity and respect. Should human remains be encountered work in the general area of the discovery will stop immediately and the location will be immediately secured and protected from damage and disturbance.

- Human remains or associated artifacts will be left in place and not disturbed. No skeletal remains or materials associated with the remains will be collected or removed until appropriate consultation has taken place and a plan of action has been developed.

- The County coroner and local law enforcement as well as the SHPO and the involved agency will be notified immediately. The coroner and local law enforcement will make the official ruling on the nature of the remains, being either forensic or archeological. If the remains are archeological in nature, a bioarchaeologist will confirm the identification as human.

- If human remains are determined to be Native American, the remains will be left in place and protected from further disturbance until a plan for their protection or removal can be generated. The involved agency will consult SHPO and appropriate Native American groups to determine a plan of action that is consistent with the Native American Graves Protection and Repatriation Act (NAGPRA) guidance.

- If human remains are determined not to be Native American, the remains will be left in place and protected from further disturbance until a plan for their avoidance or removal can be generated. Consultation with the SHPO and other appropriate parties will be required to determine a plan of action.

Should extra work be ordered by the Resident Engineer as a result of any archaeological discoveries, it shall be paid for as extra work in accordance with the requirements of Article 26 in the Standard Construction Contract.

A31. PRICES TO INCLUDE. No direct payment will be made for costs incurred in complying with the foregoing Special Provisions, unless otherwise provided. Said costs will be deemed to have been included in the prices bid for all the scheduled contract items.

(B) HIGHWAY SPECIAL PROVISIONS (JOB SPECIFIC)

TABLE OF CONTENTS

ARTICLE	DESCRIPTION	PAGE NO.
B1	CRITICAL PATH METHOD (CPM) SCHEDULE	S-14
B2	SUBMITTAL PROCEDURES	S-26
B3	SPECIAL CONDITIONS FOR MARITIME, WATERFRONT, AND FLOATING PLANTS	S-33
B4	U.S. COAST GUARD REQUIREMENTS	S-49
B5	GREENHOUSE GAS EMISSIONS	S-56
B6	EMPLOYMENT OPPORTUNITIES	S-57
B7	WORK RESTRICTIONS	S-59
B8	VALUE ENGINEERING CHANGE PROPOSAL (VECP)	S-60
B9	REFERENCE DOCUMENTS	S-67
B10	ENVISION	S-68
B11	PAYMENT FOR MAINTENANCE AND PROTECTION OF TRAFFIC	S-69
B12	SPECIAL INSPECTION AND DEPARTMENT OF BUILDINGS	S-70
B13	COORDINATION WITH OTHER CONTRACTORS	S-71
B14	REVISIONS: SPECIFICATIONS AND CONTRACT DRAWINGS	S-72
B15	U.S. ARMY CORPS OF ENGINEERS REQUIREMENTS	S-74
B16	OMITTED WORK	S-76
B17	CONSEQUENTIAL LOSS	S-77
B18	INFORMATION FROM PREVIOUS ADVERTISEMENT	S-78

B1. CRITICAL PATH METHOD (CPM) SCHEDULE

The requirements of this article supersede the requirements of NYCDOT Standard Highway Specifications **Section 1.06.25**.

1.1 DESCRIPTION

A. This section specifies the procedures and requirements, which the Contractor must follow for documenting the progress of the Work. Among the requirements specified are schedule development and maintenance as well as associated submittal requirements.

B. The Contractor must submit a Progress Schedule in compliance with Article 9 of the Standard Construction Contract. The Contractor's Progress schedule must be a Critical Path Method Progress Schedule prepared using Primavera P6 software (P6), which demonstrates complete fulfillment of all work shown in the contract documents. The Contractor must, on at least a monthly basis, revise and update the Progress Schedule, and use it in planning, coordinating, and performing all work. Schedule activities must accurately depict the entire scope of work to be performed to complete the project including, but not limited to, all work to be performed by the Contractor, subcontractors, fabricators, suppliers, consultants, the Department, and others, contributing to the project.

1.2 RELATED DOCUMENTS

- Payment Procedures (Articles 41, 42, 43, 44, 45 and 46 of the Standard Construction Contract).
- Request for Information or Approval (Article 10 of the Standard Construction Contract).
- Submittal Procedures (Article B2 of the Special Provisions [S-Pages]).
- Definitions (Article 2 of the Standard Construction Contract).
- Progress Schedules –(Article 9 of the Standard Construction Contract).

1.3 ACTION SUBMITTALS

A. Project Scheduler's Resume: The name, resume and work experience of the Contractor's Project Scheduler must be submitted to the Engineer and approved before Work on the Schedule Document begins. The resume of the proposed Project Scheduler must include the duties, responsibilities, and accomplishments which establish the candidate's scheduling and construction experience. Should the Contractor utilize a Scheduling Consultant, the Consultant's name and work experience must be submitted to the Engineer and approved before the Consultant begins work on the Schedule Document. If either, the proposed Consultant or the Contractor's Project Scheduler are not approved, the Contractor must propose an alternate Consultant or another Project Scheduler that meets the experience requirements within five (5) working days. The Engineer has the right to reject the Project Scheduler and/or the Consultant based upon lack of experience as required herein. Rejection by the Engineer of the proposed Project Scheduler and/or the Consultant will not be allowed as a basis for an extension of time to submit any of the required Schedule Document(s).

B. CPM Schedule: The CPM Schedule must be prepared using Primavera Project Management Software P6 V15 or newer. Using Critical Path Method ("CPM") techniques, the schedule must accurately represent the Contractor's plan for the timely completion of the Work and must be submitted in the following formats:

- Preliminary CPM Schedule: No later than 15 Days (CCD) after receipt of the Notice to Proceed, the Contractor must make a presentation to the Engineer concurrently with the submittal for acceptance of the Preliminary CPM Schedule defining the Contractor's

planned activities during the first 90 Days. The Preliminary CPM Schedule must contain in detail the Contractor's proposed schedule of Work to be commenced within the first 90 Days after the Notice to Proceed. This Preliminary CPM Schedule must include, in a summary format, the balance of Work leading to the Project's Substantial Completion. The Preliminary CPM Schedule package may be conditionally accepted by the Engineer pending acceptance of the Baseline CPM Schedule. The conditionally accepted Preliminary CPM Schedule must be updated monthly until the Detailed CPM Schedule is accepted. The Contractor may make no changes to the conditionally accepted Preliminary CPM Schedule without the approval of the Engineer.

- Baseline CPM Schedule: No later than 45 Days after receipt of the Notice to Proceed, the Contractor must make a presentation to the Engineer concurrently with the submittal for acceptance of the complete CPM Schedule Documents which must incorporate the entire scope of the Work. This schedule, once approved by the Engineer, will be the Baseline CPM Schedule and will be considered the schedule of record unless a Baseline CPM Schedule revision is accepted by the Engineer. The most up to date Baseline CPM Schedule or Baseline CPM Schedule revision accepted by the Engineer must be considered the Current Baseline Schedule or the schedule of record.

- Changes to the Baseline Schedule: No changes are permitted to the Baseline CPM Schedule including but not limited to Activity ID, logic, durations, budgeted quantities of both materials and man-hours unless submitted, reviewed and accepted by the Engineer prior to their insertion into the CPM Schedule.

4. CPM Logic Diagrams: CPM Logic Diagrams must be submitted on sheets 11 x 17 inch paper and as Adobe Acrobat PDF or as otherwise directed by the Engineer. The activity box must include at a minimum the activity number, description, responsibility code, early dates, total float, original and remaining durations. Logic Diagrams must be submitted until both the Preliminary and Baseline CPM Schedules are accepted. Upon acceptance of the Preliminary and Baseline CPM Schedules one set of the CPM Logic Diagrams must be submitted. The CPM Logic Diagrams must be resubmitted for approval when a revision to the schedule logic is made.

- Monthly CPM Updated Schedule: No later than the third (3rd) working day of the month, the Contractor must submit an update of the CPM Schedule. This Schedule update must be derived from the Baseline CPM Schedule and includes progress of the Work as of the data date and as agreed to each month in the monthly schedule review/update meeting. Except for recording the work progress, no changes are permitted to the updated CPM Schedule including, but not limited to, Activity ID, logic, durations, budgeted quantities of both material and man-hours unless submitted, reviewed and accepted by the Engineer prior to their insertion into the updated CPM Schedule. The Contractor agrees that this Schedule update accurately represents the progress of the Work to date and balance of the Work to be completed.

6. Hard and Electronic Copies: The submittal of the Preliminary, Baseline, and Monthly CPM Schedule Updates, in detail and in summary format, must include three (3) collated paper copies on 11 x 17 and must also be submitted in Adobe Acrobat PDF and in native Primavera Project Management P6 software files (Version 15.0 or newer).

1.4 PROJECT SCHEDULER

A. The Contractor must employ or retain a project Scheduler with a minimum of five (5) years of

experience in the use of Oracle's Primavera Project Management Primavera Project Management (P6 or later) for the purpose of developing, monitoring, maintaining and updating the Contractor's detailed Project's Schedule utilizing the latest version of Primavera Project Management P6 software (Version 15.0 or higher). The Project Scheduler must also possess at least five (5) years of relevant experience in construction, planning, scheduling, expediting and tracking the progress of the work for projects of a similar nature, size, and complexity. The Project Scheduler must be responsible for adhering to all requirements of this schedule specification, attending all job progress review/update meetings, and other meetings as requested by the Engineer. The Project Scheduler must be dedicated fully to this Contract and is expected to function as part of the Contractor's project team and actively contribute to the planning, mitigation and coordinated maintenance and upkeep of the Project Schedule deliverables of this Contract.

3.1 GENERAL REQUIREMENTS

A. To enable the Work to be performed in an orderly and expeditious manner, the Work must be monitored closely by the Contractor using a CPM Schedule. The scheduling of all the Work, i.e. design, submittals, approvals, procurement, construction, testing, etc. is the responsibility of the Contractor.

B. Progress Payment: The monthly CPM Schedule update submission, showing updated activities and status in accordance with the requirements of this Section must be a condition precedent to the start of the monthly progress payment cycle. **The Engineer will not process the monthly progress payment until the CPM Schedule update submission has been received.**

C. Time is of the essence in the performance of all Work under this Contract including but not limited to providing the required Schedule information. The CPM Schedule must at all times accurately reflect the Contractor's CPM schedule of record for the Work and must be updated as required herein, in a timely manner. The CPM Schedule must be the primary tool utilized by the Contractor to accurately document the progress of the Work and to communicate its plan for the timely completion of the Work.

D. Float Suppression: Pursuant to float sharing requirements of this Article, the use of float suppression techniques such as preferential sequencing or logic, special lead/lag logic restraints, and extended activity times or durations is prohibited. Approval of any schedule by the Engineer does not preclude the Engineer's later correction of float suppression techniques or of any other deficiency.

E. If the Contractor elects to propose an Early Completion Schedule, such schedule must be subject to the acceptance of the Engineer and in compliance with any interim milestones specified in the Contract Documents. Early Completion Schedules are subject to Articles 8 and 9 of the Standard Construction Contract.

F. The Contractor must include an activity (milestone) in its schedule that represents Substantial Completion; such activity (milestone) will only be acceptable if it meets all the requirements of the Standard Construction Contract set forth in Article 14.

G. Scheduling Kickoff Meeting: Upon Notice to Proceed, the Contractor and the Engineer will hold a Scheduling Kickoff Meeting to review these requirements and any related Contract Documents. This meeting must be attended by the Contractor's Project Manager, Contractor's Project Scheduler, representatives from key subcontractors, and the Engineer's staff, including the Engineer's project scheduler. Specific items to be covered will include Contract

schedule requirements, project phasing, intermediate milestones, workday calendars, activity coding, schedule updating, schedule revisions, progress payment process, and any other items related to the project schedule document development.

3.2 DETAILED SCHEDULE REQUIREMENTS

A. Schedule Detail: The CPM Schedule must contain sufficient design, procurement, and construction activities to represent the Work, subject to the acceptance by the Engineer, with a means to monitor and follow progress of all phases of Work; comply with limits imposed by the scope of Work, with contractually specified seasonal restrictions, interim milestones and completion dates; and with constraints, restraints, or sequences included in the Contract. The schedule detail must be subject to acceptance by the Engineer. Factors to be considered include, but are not limited to:

1. Organization by major areas of Work Breakdown Structure (WBS).
2. Submittals, submittal reviews and approvals, manufacture, tests, delivery, installation activities for long lead items, training syllabus, critical materials and equipment, system testing as well as seasonal restrictions must be represented in the CPM Schedule. Description of the activity must include sufficient detail to identify the unique scope of that activity. Whenever possible, like items must be combined in a single submittal. If multiple items are included in a single submittal, that submittal must be identified in the Schedule by an activity in accordance with the following conditions:
   - The "Review and Approval" activity for that submittal must be a condition precedent to every activity representing fabrication and delivery of any of the materials submitted.
   - If and when the submittal receives authorization for the activity to partially proceed and that partial authorization is sufficient to enable the commencement of some, but not all, successor activities, then the original submittal activity must be broken down into multiple activities, as necessary to accurately reflect the logic of Contractor's current plan.
3. Deliveries of furnished equipment and/or materials in accordance with dates or schedule windows of times set forth in the Contract. Activities representing the delivery of materials or equipment for more than one installation activity will be permitted in accordance with the following conditions:
   - The delivery activity must precede each activity representing the installation of that material in each area.
   - When partial deliveries are received and are adequate so as to enable commencement of some, but not all, successor activities, then the original delivery activity must be broken down into multiple activities, so as to accurately reflect the logic of the Contractor's current plan.
4. The required review and approval time for any submittals must be incorporated.
5. Milestones or access restraints for completion of certain portions of the Work or access and availability to Work areas as referenced elsewhere in the Contract Documents.
6. Identification of interfaces and dependencies with preceding, concurrent, and follow-on Contractors and utilities, typically shown as milestone type of activities.
7. Planning for phased or total handover to the Engineer.
8. Identification of any resource restrictions including manpower (by trade), material, and equipment, as well as any activity requiring unusual shift work, such as multiple shifts, weekend work, specified overtime, or work at times other than regular days or hours.
9. Resource Loading: Resource allocation for each activity in the CPM Schedule identifying the man-hours by trade and costs by bid item. Cost items may be combined by category

as approved by the Engineer. Activities containing unit price items must equal the amount of the quantity specified in the Contract. The Engineer reserves the right to accept or reject any value and allocation of the man-hours and/or costs.

10. Activity Code Structures: Activities must be coded for the following categories:
    - RESP - Responsibility – Identify Contractor Utility, Subcontractor, etc. responsible for the Work.
    - PHAS – Phase – Breakdown of activities in Milestone, Construction Phases and Close out activities.
    - AREA - Area – May be used as subdivision to include permits, engineering, design, procurement, submittals, submittal review and approval, fabrication, delivery, change order, training, testing & commissioning, payment item major areas of Work.
    - LOCN – Location - Breakdown by street, interwsection or block, construction reaches or landmark locations.
    - TRAD – Trade – Breakdown by work type. Examples: ramp, plaza, sidewalk, pedestrian bridge, roadway construction.
11. Calendars: Develop activity calendars commensurate with the Contractor's workweek plan. Calendars must include all non-working Days, such as: seasonal weather conditions, weekends, holidays, or other periods when the Contractor plans not to work. Calendar(s) must be reviewed and accepted by the Engineer as part of the Baseline Contract Schedule submittal and will be monitored using the most updated Contract Schedule.
    - The planning unit for the Contract must be Days (CCD).
    - Calendars must contain all applicable union holidays, as listed in any applicable labor agreements.
    - Every activity must be assigned a working day calendar that considers when the activity is planned to occur and when it is contractually permitted to occur.
12. Activities representing work or participation by the Engineer staff must be assigned to a 5-day workweek calendar, unless otherwise specified by the Engineer or Engineer's Representative. Contractor's Schedule must not anticipate or require weekend or holiday work periods for the Engineer unless specifically approved by the Engineer.

B. Materials and Equipment Procurement: Include the following activity sequence for critical and long lead materials and equipment procurement:

    1. Submittal Preparation.
    2. Review and Approval.
    3. Fabricate and Deliver.

C. Logic and Durations: Logic and activity durations must be established by the Contractor consistent with the Contract requirements and must reflect coordination between trades, definitive resource planning and on-site work conditions. Logic must show how the start of a given activity is dependent on the completion of preceding activities, and its completion restricts the start of following activities. Except for non-construction activities such as procurement of material, delivery of equipment or fabrication, activities must not have a duration greater than twenty (20) working days unless specifically approved by the Engineer. Duration for non-construction activities such as procurement of material or delivery of equipment may not exceed twenty (20) working days without prior approval.

D. Restraints and Milestones: The start date of the CPM Schedule must be the Contract NTP date. The completion date of the CPM Schedule must be the Contract Substantial Completion date as specified in this Chapter. All intermediate restraints and milestones required in the Contract

must be shown in proper logical sequence and properly constrained.

E. Schedule Dates: Whenever the term “schedule” or “scheduled date” is used, it must mean the “early start” and “early finish” dates in the CPM Schedule. The “late” dates are for purposes of calculating float and do not represent the schedule dates.

F. Activity Descriptions: Activities must be described such that the Work is readily identifiable for assessment of start and completion, as well as intermediate status. Descriptions must utilize identifiers for physical locations such as reaches, bridge locations and elevations where possible to define the Work. The activity description must identify the scope of the activity. There must not be any two activities with the same activity description.

G. Working Days: While contract times are expressed in Days (CCD), the CPM Schedule must be calculated in working days.

H. Weather or Seasonal Allowances: Seasonal weather conditions must be considered in the planning and scheduling of all Work such that all Work will be completed within the allotted Contract time. Any weather or seasonal allowance must be stated in the Baseline narrative.

I. Submittal and Review Periods: The review period shown in the Schedule for submittals must conform to the Contract requirements set forth in Article 10 of the Standard Construction Contract and the related submittal section of the Technical Specifications.

J. Constraints: The Schedule must include all Work constraints indicated in the Contract Documents. Other activity Constraints must not be used unless approved by the Engineer.

K. Float: Float is defined as the calculated amount of time that the estimated start or finish of an Activity can be delayed without impacting the start or finish of other downstream activities logically connected in a progressive relationship. Float, in any schedule, must not be for the exclusive use or benefit of either the City or the Contractor, but must be available for use by both the City and the Contractor.

L. The CPM Schedule must contain sufficient activities and allotted time for all inspections, testing, commissioning and the Engineer’s acceptance, as well as system testing, orientation, and demonstrations. The schedule must also include a System Testing and Acceptance fragnet or subnet within the project CPM Schedule as needed. This schedule will identify all equipment and systems that require testing, orientation and acceptance by the Engineer. The durations and sequences of the systems testing, orientation and acceptance must be as specified in the various sections of the Contract Specifications. Each system will contain, but will not be limited to, all of the following activities and constraints:

1. Interface between the construction activities and their respective system.
2. Contractor’s pre-testing Work.
3. Submittal and approval of the Contractor’s pre-testing data and checklist, as appropriate.
4. Sufficient notification time to the Engineer prior to system testing.
5. Submittal and approval of the preliminary and final as-built drawings.
6. Submittal and approval of the preliminary and final O&M Manuals.
7. Submittal and approval of testing procedures.
8. All other systems that are required to be tested and accepted prior to the specific system being tested.
9. System testing by the Engineer.
10. Other outside agencies, utilities, etc., that are required to test, witness and accept the system.

11. Submittal and approval of the orientation syllabus, orientation manual, and orientation video.
12. Performance of orientation.

M. Prior to Substantial Completion, the Contractor must submit a Punchlist Completion Schedule that shows the schedule of the punch-list items. All Work shown on this schedule must be performed as specified within Article 14.2.2 “Approval of Final Approved Punch List”. The Engineer, in a written notification to the Contractor, must approve the Contractor anticipated completion dates. If the Engineer and the Contractor are unable to agree on the anticipated completion dates, the Engineer must establish dates for the completion of each item of work.

N. In the event that Contractor requires multiple submissions in order prepare a submittal that is acceptable to the Engineer and that can be approved, then the Contractor must adjust its CPM schedule to include adequate time for such multiple submittals at each stage of the approval process. Any additional time resulting from the Contractor’s multiple submissions before an item can be approved by the Engineer must be mitigated by the Contractor.

3.3 BASELINE CPM SCHEDULE NARRATIVE

A. As a component of the Baseline CPM Schedule, submit a narrative to describe the procedures, general approach and the means and methods it will use to complete the Work under the conditions described and in accordance with Article 9 of the Standard Construction Contract.

B. Submit the narrative described herein along with the Baseline CPM Schedule. Any review, acceptance or approval of a Baseline narrative or Schedule submission cannot revise or amend any Contract provision and does not represent the Engineer’s agreement to any conclusion, interpretation, indication, method or description contained therein.

C. A narrative report that must be signed by the Contractor’s project manager and must describe and demonstrate that the Contractor’s proposed means and methods meet the specified Contract requirements. The narrative must include but not limited to:

1. Description of the scope of Work and goals.
2. A discussion of the CPM Schedule development.
3. A listing of all intermediate contractual milestones with their respective float and schedule analysis.
4. Identification of the critical path(s).
5. Identification of the long lead items and their impact on the critical path(s).
6. Identification and description of the calendar(s) used in developing the Baseline CPM Schedule.
7. Identification of planned manpower and projections of Contractor’s workforce and subcontractor’s workforces; the manpower projections must also be submitted in a histogram and cumulative graph format.
8. Identification of planned equipment requirements.
9. Description of planned mobilization, including provisions for the Engineer’s office and facilities.

3.4 SCHEDULE REVIEWS

A. Reviews of Contractor’s Schedule submissions will be in accordance with Article 9 of the Standard Construction Contract and this Article, unless noted otherwise.

B. Preliminary CPM Schedule Review: Within 15 Days following receipt of the Preliminary CPM Schedule, the Engineer will review the Preliminary CPM Schedule and return it to the Contractor either with comments or conditionally accepted. During this time, the Contractor must participate

in the review and evaluation of the Preliminary CPM Schedule with the Engineer. Within 5 working days after comments are received, the Contractor must address the Engineer's comments and resubmit a corrected Preliminary CPM Package. The Contractor must repeat this process as many times as required at no additional cost to the City until the Engineer conditionally accepts the Preliminary CPM Schedule.

C. Baseline CPM Schedule Review: Within 20 working days from receipt of the Baseline CPM Schedule, the Engineer will review the Detailed CPM and return it to the Contractor either with comments or accepted. During this time, the Contractor must participate in the review and evaluation of the Detailed CPM Schedule by the Engineer. Within 5 working days after comments are received, the Contractor must address the Engineer's comments and resubmit for acceptance a corrected Detailed CPM package. The Contractor must repeat this process as many times as required until the Engineer accepts the Detailed CPM Schedule at no additional cost to the City.

D. Update Reviews: The Engineer will review and respond to the update scheduling submittals within 5 working days after submittal, unless a different review period is expressly identified elsewhere in the Specifications or other Contract Documents. After review, if changes or additional information are required, the Contractor must submit a revised CPM Schedule update within 3 working days after receiving the comments. Review, revision, and resubmission must continue until the Engineer's acceptance is achieved at no cost to the City as defined in Article 2 of the Standard Construction Contract.

E. Reviews and Re-submittals: The Contractor must repeat this process as many times as required at no additional cost to the City until the Engineer accepts the Preliminary Schedule, Baseline CPM Schedule, and the monthly CPM Schedule updates. Acceptance of the Preliminary Schedule is a prerequisite for the acceptance of the Baseline Schedule.

3.5 UPDATING THE PROJECT SCHEDULE

A. Updating: The Contract Schedule must be updated monthly, with Data Date as of the last day of the current month. The Engineer reserves the right to change the monthly cut-off dates in the future for its sole convenience. The Monthly Schedule Review/Update Meeting must be the prerequisite and the start of the monthly update cycle.

1. The CPM Schedule must be updated monthly, whether or not the Engineer has accepted the prior updated Schedule, to reflect actual progress. The update must include the historical record of actual start and finish dates for activities completed. For in-progress activities, the update must include percent complete based on a unit of measure and remaining duration based on the amount of work-days required to complete the activity. Enter for each applicable activity actual installed quantities.
2. Default (automatic) updating of the schedule is prohibited. Actual Start and Finish dates must not be automatically updated by default mechanisms that may be included in the CPM scheduling software systems. This Contract’s primary source of actual starts and finishes and percentages complete are the quantity verification sheets (QVS), which must include the Start and Finish Dates, signed by both parties and included in each of the Contractor’s payment requests.
3. The updated Current Project Schedule must be used for subsequent planning, scheduling, managing and updating the execution of Work to be accomplished. If an update evidences delay to the Baseline Schedule, one of the goals of the planning process must be mitigation of that delay, in accordance with and subject to the provisions of Articles 9 and 10 of the Standard Construction Contract.

B. Two (2) working days prior to the monthly schedule review/update meeting, the Contractor will

provide to the Engineer two (2) sets of the two weeks-look-ahead schedule or "Activity List" which will identify, at a minimum, the following information for all activities that have started, are in progress, or have been completed during the reporting period.

1. Assessment of each in-progress activity's remaining duration in P6.
2. The actual start and finish dates whenever appropriate in P6.
3. Actual quantities installed and the physical percent complete for all design and construction activities in P6.

C. Monthly Schedule Review/Update Meetings: A monthly schedule review/update meeting must be held within the last five (5) working days of the reporting month. This meeting must be attended by the Engineer, the Engineer's scheduler, the Contractor's project manager and the Contractor's Project Scheduler, and key subcontractors' representatives. The purpose of this meeting must be to obtain joint agreement on Work progress shown on the Activity List as well as to discuss schedule-related problem areas, proposed logic changes, revisions to previously established productivity rates and other schedule issues. At this meeting, all progress during the calendar month must be addressed and reviewed for incorporation into the CPM Schedule by the Contractor. These meetings must precede the formal submittal of the monthly updated CPM Schedule.

D. Subsequent to the monthly schedule review/update meeting, and pursuant to any agreements made regarding progress and the agreed-upon changes, the Contractor must update the CPM Schedule and provide all required reports showing current progress of the Work as well as a plan and schedule of the completion of the remaining Work. The CPM Schedule must be updated as of the last day of each calendar month and must be submitted no later than the fifth (5th) working days of the month following the report period, until Substantial Completion of the Project. The update must comply with the criteria and format set forth in this Specification. This progress information must be included in the computerized CPM Schedules.

E. The monthly update procedure must include a review of the submittal and delivery activities to ensure that the scope and logic of the activities are consistent with Contractor's current plan.

F. On every progress update, the Contractor must report the physical percent complete as of the status date, for all activities in progress. The physical percent complete for each activity must be established in the following manner: For activities that are quantifiable, the physical progress equals the quantity installed or erected divided by the total quantity allocated to the particular activity (including overruns and underruns). For those activities that cannot be quantified, physical percent complete must be estimated and backup calculations provided.

3.6 MONTHLY PROGRESS REPORTS

A. The Contractor must prepare definitions and designs for reports and/or layouts in Primavera Project Management, P6 V15 or newer in accordance with the requirements detailed herein. The Monthly Progress Report Package submitted to the Engineer must consist of three (3) collated copies of the following:

1. Activity Tabular Reports.
2. Resource Tabular Reports.
3. Resource/Cost Graphic Reports.
4. Bar Charts.
5. Narrative Progress Report clearly identifying progress status and restrictions encountered during the reporting period.

B. Activity Tabular Reports must be provided in the following sort orders:

1. Total float, then early start.
2. Grouped by responsibility, then by early start.
3. Grouped by major Work areas, then by early start.

The minimum activity information required in each of the above reports must include the following:

- Activity ID.
- Activity description.
- Location code identification.
- Work responsibility code identification.
- Original activity duration (OD) and remaining duration (RD) in working days.
- Early and late start and finish dates.
- Total float.
- Percent complete.
- Calendar ID.

C. Updated Bar Chart: Include updated bar charts for:

- Remaining activities.
- Critical path(s) activities.
- Six-week look ahead.
- Summary bar charts.

The minimum activity information required in each of the above bar charts must include the following:

- Activity Bar Content: The activity display must include the activities' description, activity ID, OD, RD, Calendar ID, percent complete, total float, early start and finish dates and Responsibility for each activity bar.
- Grouping: The activities must be grouped as approved by the Engineer.
- Critical Path Display: The critical path must be identified on the plot in such a manner that it will be clearly distinguishable from other activities.
- Progress Display: Completion of activities must be indicated on the plot.
- The summarized CPM Schedule must reflect the current schedule status of the project and be compared to the Baseline Schedule. The format and level of detail will be in accordance with the Contract's major areas of Work to be agreed upon with the Engineer.

D. Narrative Progress Report: The Narrative Progress Report submitted as part of the monthly update analysis must include, but not be limited to:

1. Description of the CPM Schedule status.
2. Discussion of current and anticipated delays including reason for the delay, the recovery scenario(s) and their estimated impact, including off-site activities such as submittal preparation, fabrication, and deliveries.
3. If the Work is behind schedule, include discussion of schedule slippage and/or progress along the critical path in terms of Days ahead or behind the allowable dates and discussion of progress along other paths with negative float to mitigate delays. This must also include a proposed recovery plan and action to be taken.
4. Logic changes and an explanation of the revisions. Revisions to activities not worked on during the period, including changes in duration; revisions to activity relationships; and

revisions to constraints on activities; are all to be considered logic revisions. Similarly, this must include description and explanation of reason(s) for any changes to calendars being used in Schedule as well as any changes to calendar assignments of activities.

5. Updated schedule modifications reports: A comparison report showing all changes made to the schedule since the last update as approved by the Engineer. This report must include the reasons for these changes.
6. Identification and justification of all activities performed out of sequence.
7. A summary of planned equipment utilization for the Project, identifying each type of operated equipment to be used on the Contract, the planned quantity of each type of operated equipment utilized each month, and all changes to the criteria for mobilizing and demobilizing each piece of equipment to and from the site.
8. A summary of planned labor utilization for the Contract, identifying the average and maximum number of workers on site each month. Identify actual and potential labor resource limitations. A summary of the actual labor utilization used over the past month.
9. List of identified additional out of scope items and their potential schedule impact, if any.
10. Identification of outstanding RFI's including discussion of their cost and/or schedule impact.

3.7 SCHEDULE DELAY CLAIM:

A. In addition to the requirements outline in with Article 11 "Notice of Conditions Causing delay and Documentation of damages Caused Delay" of the Standard Construction Contract and in instances where the Contractor is submitting a schedule delay claim, the claim request must include a schedule subnet, tabular reports and an explanation that clearly demonstrates the impact of the claim on the project's schedule. The schedule to be utilized as the basis for the claim must be the "Current Updated Schedule" which reflects the present status of the Project. The Contractor must provide to the Engineer, as a minimum, the following information:

1. Schedule subnets (logic diagrams) and tabular reports (prior to and after the Extra Work insertion) that clearly demonstrate the schedule impact on the entire Current Updated Schedule.
2. Schedule impact on engineering/design related activities and/or on activity man-hours.
3. Schedule impact on material and/or equipment procurement, fabrication and delivery schedules.
4. Schedule impact on material storage, temporary services (water, air, power, etc.), supervision, construction equipment, productivity, and manpower.
5. Narrative that clearly identifies, describes, and substantiates the schedule impact on both the affected and subsequent (unchanged Work) activities.
6. Corrective action that can be taken in order to avoid/minimize the schedule impact.
7. Computerized storage media containing all required schedules, cost, resource, and Narrative information.
8. Any other tabular/graphical reports required by the Engineer.

3.8 REVISION TO THE PROJECT SCHEDULE

A. In the event that the Engineer determines that there will be or has been a delay which might affect the critical path, the Engineer will instruct the Contractor to analyze the circumstances as to whether the critical path is or will be affected thereby and submit a proposed recovery plan to the Engineer.

B. In the event that it is necessary to revise the CPM's Schedule and/or phasing plan, a revised CPM Schedule and/or phasing plan must be submitted for acceptance at no additional cost to the City. Reasons for revision may include, but are not limited to, incorporation of approved

Extra Work (change orders), modification of activity man-hours, if the Engineer determines that Work is not progressing to meet the accepted CPM Schedule, when a delay is affecting the critical path(s), if the phasing plan has been changed, or if the Work is not performed as shown in the accepted CPM Schedule.

C. In all situations in which the CPM cost or CPM Schedule is revised, the Contractor must submit a narrative explaining the reasons for the changes. In addition, the Contractor must submit a listing of all proposed changes in network logic including, but not limited to changes in activity duration and logic, changes in activity man-hours and quantities, changes in activity sequence and any changes in completion dates. Revisions to the schedule document must only be made after authorization by the Engineer.

D. Upon the Engineer's direction, the proposed resource and/or schedule changes are to be added into the CPM Schedule and must be submitted to the Engineer for review and acceptance within five (5) working days.

E. After Extra Work (change orders) has been approved, the approved logic and its associated information such as activity man-hours, quantities, etc., must be incorporated into the Project Schedule. The sum of the cost and quantity of all the individual activities contained in the Extra Work must be equal to the total cost and quantity of the approved Extra Work. All activities associated with Extra Work must be coded with their specific Extra Work Number.

3.9 PROCEDURES FOR CPM UPDATES AND SCHEDULE CHANGES

A. All Monthly Progress CPM updates must be submitted using the last accepted CPM Schedule. No revisions must be made to the schedule unless they have been expressly authorized in writing by the Engineer as provided herein. Revisions that are not permitted without authorization include but are not limited to revisions in: activity duration, logic, activity man-hours, quantities, activity identification, and historical data from prior updates. Only actual dates and progress agreed upon at the progress meeting and/or progress walk through must be used in the update.

B. Any update that does not comply with these requirements will be rejected by the Engineer; and, in accordance with Paragraphs 3.1.B and 3.5.A.2, above, payment will not be processed until an update consistent with these requirements is received. The Contractor must not delay submission of an update pending authorization of review.

C. If the Contractor intends to propose revisions to the CPM Schedule, the Contractor must submit, separate from any monthly update, a list of the proposed revisions, a fragnet showing the proposed revisions in a form which clearly identifies where the fragnet is to be inserted in the schedule, and a narrative explaining the reason for these revisions. No revision to the CPM Schedule, including any update, must be made until the proposed revision is reviewed by the Engineer and written authorization from the Engineer is provided for that revision. The authorization of any revision to a previously accepted schedule is within the sole discretion of the Engineer.

The authorized revision must not be incorporated into the CPM Schedule Document until the CPM Schedule update following the date of authorization of that revision. Once incorporated, that revision must become part of the accepted schedule.

B2. SUBMITTAL PROCEDURES

The requirements of this article supplement the submittal requirements in the NYCDOT Standard Highway Specifications and the NYCDEP Standard Sewer and Water Specifications. If a conflict exists, the requirements of this article govern.

1.0 GENERAL

This article includes administrative and procedural requirements for submitting Shop Drawings, Catalogue Cuts, Material Samples, As-built or Record Drawings, and other submittals required by the Contract Documents.

Review of submittals does not relieve the Contractor of responsibility for any Contractor's errors or omissions in such submittals, nor from responsibility for complying with the requirements of the Contract.

2.0 DEFINITIONS

Program Management Information System (PMIS) – NYCDDC's System of Record for the Costal Resiliency Program.

Design Consultant - the entity responsible for providing design services for the Project, including without limitation, preparing the construction documents (drawings and specifications) and providing services in connection with such documents during construction. The entity serving as the "Design Consultant" may be a corporation, firm, partnership, joint venture, individual or combination thereof. Such entity may be either an employee(s) of the City or an entity engaged by the City to provide such services.

Submittals - written and graphic information that requires responsive actions and includes without limitation all shop drawings, product data, letters of certification, tests and other information required for quality control and as required by the Contract Documents.

Shop Drawings – includes drawings, diagrams, illustrations, schedules, performance charts, brochures, and other data, except for coordination drawings, specifically prepared for the project by the Contractor or any subcontractor, manufacturer, supplier or distributor, which illustrates how specific portions of the work must be fabricated and/or installed.

Product Data and Quality Assurance Submittals - includes manufacturer's standard catalogs, pamphlets and other printed materials including without limitation the following:

1. Catalogue and Product specifications
2. Installation instructions
3. Color charts
4. Catalog cuts
5. Rough-in diagrams and templates
6. Wiring diagrams
7. Performance curves
8. Operational range diagrams
9. Mill reports
10. Design data and calculations
11. Certification of compliance or conformance
12. Manufacturer's instructions and field reports

3.0 SUBMITTAL PROCEDURES

3.01 Document Control

The Contractor must submit for approval by the Department's engineering personnel and/or Supervising Consultant (herein after called "the Engineer") a Document Management Plan within 30 days of Notice

of Award. The Document Management Plan must define the Contractor's Electronic Document Management System (EDMS) including security protocols. The Document Management Plan must include the following:

1. Requirements for records storage and retention.
2. Procedures for the electronic data backup of all Project-related documents, on a minimum weekly basis, in a secure off-Site area in order to allow for recovery of unexpectedly lost data.
3. Procedures for data transmission, storage and sharing protocols.
4. Procedures for the maintenance, retention, retrieval, and disposal of records.
5. An auditable and tracking system of all Project correspondence and documents
6. Methods by which all documents issued and received by the Contractor will be uniquely coded and retrievable in a user-friendly format.
7. File control, and search and retrieval methods for all documents.
8. Methods to facilitate sharing of data, including procedures for accessing all documents.
9. Methods for controlling document updates.
10. Methods for identification of the originator/recipient for all documents.
11. Document approval tracking.
12. Methods for enabling a searchable database.
13. Methods to establish links among various documents.
14. Protocols for hard-copy and electronic filing.
15. Procedures for recording and tracking review comments and participation by the Engineer and the Contractors' internal review processes as well as any reviews by third-parties or stakeholders.

3.02 Project Management Information System

The Contractor must use the Project Management Information System (PMIS), provided by NYC DDC, throughout the Term of the Agreement for document management and transmittal, including workflows, file storage, communication, and correspondence. This must be in addition to the Contractor's obligation to provide the EDMS as referenced in Sub-Article 3.0.1. All submittals must be uploaded to the PMIS and adhere to the hard copy submittal requirements set forth in the General Conditions. Submittals will be deemed incomplete until the soft copy is uploaded to the Project Management Information System and the hard copies have been received by the NYC DDC. The PMIS will be accessible only through security rights and administration at the discretion of NYC DDC. NYC DDC reserves the right to make periodic changes and enhancements to this requirement with which the contractor must immediately comply.

The PMIS will not relieve the Contractor of its responsibility to independently provide redundancy and security of all Project records. Immediately upon provision by the NYC DDC of access to the PMIS and when instructed to do so by the NYC DDC, the Contractor must utilize the PMIS as the primary interface for all official communications, transmissions and records in connection with the Project between the Contractor and NYC DDC.

Additional PMIS requirements/guidelines for the Contractor:

1. The PMIS must be used to track and manage the Project and as an official record of all Project communication.
1. Designate a PMIS coordinator (an internal point of contact) and provide their name, phone, and e-mail to NYC DDC no later than seven days after NTP
2. Provide high-speed internet connectivity to access the PMIS.
3. Upload, submit, track, and review submittals and all Project related information via the PMIS. Where physical samples are required, review and track the submittal via the system, transmit the sample itself to the reviewer via traditional means and submit a scanned color copy or picture via the PMIS.
4. Enter all PMIS metadata as directed by NYC DDC
5. Use the file naming convention provided in Sub-Article 4.0 for all files uploaded to the PMIS

Refer to other General Requirements and technical specification sections for the specific submittal requirements stated in that section.

3.0.3 Submittal Coordination

The Contractor must coordinate each submittal with fabrication, purchasing, testing, delivery, other submittals, and related activities that require sequential activities.

3.0.4 Submittal Schedule

The Contractor must submit for approval by the Engineer, a Submittal Schedule within fifteen (15) days of Notice of Award. The Submittal Schedule must include and describe all project submittals. The Submittal Schedule must indicate the applicable specification section requirement, identify dates for submittal sequence, preparation and submission based on the approved project schedule and must be organized in a logical manner. The Submittals Schedule must take into consideration reasonable review times and any lead times required by fabricators or manufacturers.

In the interest of a progressive and orderly flow of work from the Contractor to the Engineer that avoids submission of an excessive number of submittals in the same period, the Submittal Schedule must not include more than two (2) submittal reviews per calendar week, unless the Engineer agrees in writing to a larger number on a case-by-case basis.

The Contractor must incorporate the following work flow and timeframes for submittal review in the Submittal Schedule:

1. Submittals received after 3PM will be deemed submitted the following working day.
2. Submittals received after 12PM on Friday will be deemed submitted on the following Monday.
3. Submittals will be deemed administratively incomplete until both the soft copy is uploaded to the PMIS and the hard copies have been received by NYC DDC

Review priorities and extension of review times must be coordinated with the times established in the approved Submittal Schedule.

3.0.5 Submittal Identification

The Contractor must place a permanent label or title block on each submittal for identification. Each submittal must include:

1. Name of firm or entity that prepared each submittal on the first page of the label or title block.
2. The following minimum information on label for processing and recording action taken:
    a. Project name, NYC DDC Project Number and Contract Number
    b. Revision date
    c. Name and address of Design Consultant
    d. Name and address of Contractor
    e. Name and address of subcontractor
    f. Name and address of supplier or manufacturer
3. Submittal number or other unique identifier, including revision identifier:
    a. Number and title of relevant Specification Section
    b. Drawing number and detail references, as appropriate
    c. Location(s) where product is to be installed, as appropriate
    d. Other necessary identification
4. A revision grid which lists all revisions of the submittal
    a. Date Submitted
    b. High-level description of change
    c. Revision number in XX format starting at 00

3.0.6 Transmittal

The Contractor must package each submittal individually and appropriately for transmittal and handling. The Contractor must transmit each submittal using a transmittal form. Transmittals received from sources other than the Contractor will be returned without review. Re-submission of the same drawings or product data must bear the original number of the prior submission, the original titles and next sequential revision number.

3.0.6.1 Transmittal Form

The Contractor must indicate the following information on the Transmittal Form:

1. Project name, NYC DDC Project number and Contract Number.
2. Date
3. Destination (To:).
4. Source (From:).
5. Unique identifier
6. Names of Contractor, subcontractor, manufacturer, and supplier.
7. Category and type of submittal.
8. Submittal purpose and description.
9. Specification Section number, unique identifier and revision number
10. Drawing number and detail references, as appropriate.
11. Transmittal number numbered consecutively.
12. Submittal and transmittal distribution record.
13. Remarks.
14. Signature of transmitter.

4.0 SUBMITTAL FORMAT

4.0.1 Shop Drawings, Product Data, and Quality Assurance Submittals

The Shop Drawings, unless otherwise directed, must be on sheets of the same size as the Contract Drawings, drawn accurately and of sufficient scale to be legible, with a one half (1/2) inch marginal space on each side and a two (2) inch marginal space for binding on the left side.

Shop Drawings and Product Data and Quality Assurance Submittals must be submitted to the PMIS as raster files in Adobe Acrobat ".pdf" format with a minimum resolution of 200 dpi. Each submittal must be readable and printable on the Department's systems with the following scanning parameters: 400 dpi resolution, autodeskewing and despeckling. Each submittal must contain a list of the submittals and the electronic format of their files. Native file versions of submittals may be requested at the discretion of NYC DDC

Responsibility of the Contractor: The approval of Shop Drawings will be general and must not relieve the Contractor of responsibility for the accuracy of such Shop Drawings, nor for the proper fitting and construction of the work, nor of the furnishing of materials or work required by the Contract and not indicated on the Shop Drawings. Approval of Shop Drawings must not be construed as approving departures from the Contract Drawings, Supplementary Drawings or Specifications.

Electronic copies of submittals uploaded to the PMIS must utilize the following standard file naming convention

Year		Four (4) digit year, i.e.: 2019
Month		Two (2) digit month, i.e.: June = 06
Day		Two (2) digit day, i.e. 28

DDC		NYC DDC
Project		Applicable project ESCR, BMCR, BPCR, RHCR
Sandy Ref.		SR = Superstorm Sandy Resilience
Specification		Applicable Specification section, i.e.: 03300
Submittal No.:		Sequential number within the specification section, i.e..: 0001
Rev		The 2-digit revision or version number i.e.: 03
Descr		Document title (short description, think Google key words, include sender/recipient acronyms if appropriate)

i.e.: 2019-06-28_DDC_ESCR_SR_03300-0001-03_Product_data_name

File naming guidelines:

Dates (Final Documents)

Dates should always be presented 'back to front', that is with the year first (always given as a four-digit number), followed by the month (always given as a two-digit number), and the day (always given as a two-digit number) such as "20190801" or 2019-08-01" for August 1st, 2019. Dates in file names are used to identify issued records and to differentiate between multiple "final" issuances of the same document.

Keep File Names Short but Meaningful

Some words add length to a file name but do not contribute towards the meaning, for example words like "the", "a", "to" and "and". Use industry-standard nomenclature or an abbreviation of same wherever possible.

No Spaces in File Names

Use an underscore "_" or a dash "- ", and words for ease in sorting. Use of caps to distinguish words for ease of reading is encouraged (e.g. DocumentManagementPlan or Document_Management_Plan). Spaces between words increase the software system naming characters and should be avoided.

Numbers in File Names

When file names include numbers, it is important to include the zero for numbers 0-9 to maintain the numeric order. This helps to retrieve the latest record number. i.e. 01, 02 … 99, unless it is a year or another number with more than two digits.

Special Characters

The use of special characters can cause problems with uploading, viewing and downloading documents over the internet. Special characters, such as: (~ " # % & * : < > ? / \ { | } @ $ ^ , ?) should not be used in filenames. Even if one's operating system allows filenames with those characters there can be issues when trying to transport files to another system.

Correspondence Files

It is recommended that the file names of correspondence include the name of the correspondent, an indication of the subject, and the date of the correspondence, e.g.: 2019-11-07_DDC_ESCR_SRM1_HNTB-DDC_Sample_Report_R02

4.0.2 Requests for Information (RFIs)

RFIs and other queries of the Design Consultant must be submitted to the PMIS using the forms specifically prepared for this purpose by the Design Consultant.

4.0.3 As-Builts

CADD record drawing (as-built) files submitted by the Contractor must be vectorized, computer-generated drawing files in the latest version of native MicroStation ".dgn" format. Each submittal must include the resource files such as Cell Libraries, Font Libraries, DGNLIB and reference files used to generate the

CADD drawing files. Record drawings must also be submitted in PDF or other raster format. Each submittal must be provided on CD-ROM or DVD+R and transmitted on the Project Management Information System. Each submittal must have a complete drawing list (drawing number and CADD file name for each drawing).

5.0 SUBMISSION OF SHOP DRAWINGS

Initial Submission: The Contractor must upload the submittal to the PMIS and provide hard copies as indicated in General Conditions for the Design Consultant's review and acceptance. The Engineer will transmit Shop Drawings to appropriate Design Consultants for review and acceptance, including Commissioning Authority/Agent as applicable. A satisfactory Shop Drawing will be stamped "No Exceptions Taken", be dated and returned to the Contractor.

Should the Shop Drawing(s) be marked "Make Corrections Noted" by the Design Consultant, the Engineer will return the Shop Drawings to the Contractor to make the necessary corrections and changes as indicated thereon.

Should the Shop Drawing(s) be "Rejected" or noted "Revise and Resubmit" by the Design Consultant, the Design Consultant will return the Shop Drawings to the Contractor with the necessary corrections and changes to be made as indicated thereon.

The Contractor must make such corrections and again submit the shop drawing to the Design Consultant. The Contractor must revise and resubmit the Shop Drawing as required by the until the Shop Drawings are stamped "No Exceptions Taken" or "Make Corrections Noted".

Commencement of Work: No work or fabrication called for by the Shop Drawings must be performed until acceptance of the said drawings by the Design Consultant. In addition to the foregoing Shop Drawing transmissions, a copy of any Shop Drawing prepared by any of the Contractor's subcontractors which Shop Drawing indicated work related to, adjacent to, impinging upon, or affecting work to be done by other subcontractors must be transmitted to the subcontractors so affected.

Variations: If the Shop Drawings show variations from the Contract requirements because of standard shop practice or other reasons, the Contractor must make specific mention of such variations in its letter

of submittal. Acceptance of the Shop Drawings will constitute acceptance of the subject matter thereof only.

6.0 SUBMISSION OF PRODUCT DATA

Except as otherwise prescribed herein, the submission, review and acceptance of Product Data and Catalogue cuts must conform to the procedures specified above.

Submissions of Product Data must include the following information, as applicable:

1. Manufacturer’s written recommendations.
2. Manufacturer's product specifications.
3. Manufacturer's installation instructions.
4. Standard color charts.
5. Manufacturer’s catalog cuts.
6. Wiring diagrams showing factory-installed wiring.
7. Printed performance curves.
8. Operational range diagrams.
9. Mill reports.
10. Standard product operation and maintenance manuals.
11. Compliance with specified referenced standards.
12. Testing by recognized testing agency.
13. Application of testing agency labels and seals.
14. Notification of coordination requirements.

The Contractor must submit Product Data before or concurrent with Samples of Materials.

7.0 SUBMISSION OF SAMPLES OF MATERIALS

Samples must be submitted in triplicate, of sufficient size to show the quality, type, range of color, finish and texture of the material.

Each of the samples must be labeled as follows:

1. Name of the Project, NYC DDC Project Number and Contract Number.
2. Name and quality of the material.
3. Date.

8.0 SUBMISSION OF PHOTOS

All electronic photographs must be uniquely identified, include the project abbreviation, identify the location depicted in the photo, date photo was taken and submitted in Joint Photographic Experts Group (JPEG) (.jpg) file format, sized at a minimum resolution of 1024 by 768 pixels. Save grayscale or color photo images that are scanned in JPEG (.jpg) file format with medium to low quality compression at a resolution of 200 dpi.

B3. SPECIAL CONDITIONS FOR MARITIME, WATERFRONT, AND FLOATING PLANTS

1.0 FLOATING PLANTS – GENERAL

1.0.1 Definition

Floating plant/vessel: used to transport personnel, work boats, floating cranes and derricks, barges, patrol boats, etc.

1.0.2 References

1. United States Army Corps of Engineers EM-385
2. OSHA 29 CFR

2.0 REQUIREMENTS

2.0.1 Floating Plant Inspection and Certification

All floating plants (i.e. regulated by the United States Coast Guard (USGC)) shall have required USCG documentation that is current before being placed in service. A copy shall be posted in a public area on board the vessel. A copy of any USCG Form 835 issued to the vessel in the preceding year shall be available to the Engineer and a copy shall be on board the vessel.

All dredges and quarter boats not subject to USCG inspection and certification or not having a current ABS classification shall be inspected in the working mode annually by a marine surveyor accredited by the National Association of Marine Surveyors (NAMS) or the Society of Accredited Marine Surveyors (SAMS) and having at least 5 years of experience in commercial marine plant and equipment.

All other plants shall be inspected before being placed in use and at least annually by the Agency required, including but not limited to the USCG for a Certificate of Inspection (COI), a marine surveyor (in the case of barges and/or vessels, certified crane inspector), professional engineer or the competent person as designated by the Contractor in writing.

The inspection shall be documented, a copy of the most recent inspection report shall be posted in a public area on board the vessel, and a copy shall be furnished to the Engineer upon request. A copy shall also be provided to the Engineer.

The inspection shall be appropriate for the intended use of the plant and shall, as a minimum, evaluate structural condition, compliance with safety requirements and compliance with NFPA 302.

Periodic inspections as defined in writing by the Contractor and tests shall assure that a safe operating condition is maintained.

Floating plants found in an unsafe condition shall be taken out of service and its use prohibited until unsafe conditions have been corrected.

2.0.2 Personnel Qualifications

Vessel Captains shall be in possession of a current, valid USCG license, which shall be posted in a public area on board the vessel, including any required and correctly endorsed documents as required by the USCG.

Crane Operators shall be licensed or certified in accordance with the requirements outlined by the NYC Department of Buildings, Cranes and Derricks

Operators of the floating plant shall be licensed and/or documented by the USCG when the plant is subject to one or more of the following criteria:

1. The vessel is inspected and certified by USCG in accordance with EP 1130-2-500, Appendix L;
2. The vessel is normally engaged in or near a channel or fairway in operations that restrict or affect navigation of other vessels and is required by law to be equipped with radio-telephones of the 156-162 band frequency; or
3. Floating plant is engaged in the transfer of oil or hazardous material in bulk.
4. A USCG Radar Observers endorsement on licenses is required for Operators of Uninspected Towing Vessels and Masters and Pilots on radar-equipped vessels 26 ft (7.9 m) or more in length. Endorsements must be issued from a USCG-approved training facility.

2.0.3 Record Keeping

All records for drills, inspections, maintenance and other legal requirements shall be maintained on site by the Contractor with copies provided on a weekly basis to the Engineer.

All records shall be reviewed and signed by the competent person, as designated in the Contractor's health and safety plan, and by the Contractor's Healt hand Safety Manager.

All legal inspections required by the USCG and other Agencies shall be conspicuously displayed on the floating equipment.

2.0.4 Severe Weather Precautions

Since floating plant, boats or other marine activities may be endangered by severe weather (including sudden and locally severe weather, storms, high winds, hurricanes, and floods), plans shall be made for removing or securing plant and evacuation of personnel in emergencies. > See Section 01.E. This plan shall be part of the Contractor's Health and safety plan and shall include at least the following:

1. A description of the types of severe weather hazards the plant may potentially be exposed to and the steps that will be taken to guard against the hazards;
2. The time frame for implementing the plan (using as a reference the number of hours remaining for the storm to reach the work site if it continues at the predicted speed and direction), including the estimated time to move the plant to safe harbor after movement is started;
3. The name and location of the safe location(s);
    a. The name of the vessel(s), type, capacity, speed, and availability that will be used to move any non-self-propelled plant;
    b. River/tide gage readings at which floating plant must be moved away from dams, river structures, etc., to safe areas;
    c. Method for securing equipment if not moved.
    d. Extended movement of floating plant and tows shall be preceded by an evaluation of weather reports and conditions by a responsible person to ascertain that safe movement of the plant and tow can be accomplished.
    e. Work or task orders shall be preceded by an evaluation of weather reports and conditions by the Contractor's Director of Safety on site to ascertain that safe working conditions exist and safe refuge of personnel is assured.
    f. USCG approved personal flotation devices (PFDs) - Types I, II, III, or V - shall be worn by all personnel on decks exposed to severe weather, regardless of other safety devices used. USCG-approved Type V automatic inflatable PFDs rated for commercial use may be worn by workers on USACE sites per Section 05.J.02.
    g. A sufficient number of vessels of adequate size and horsepower, each designed, outfitted, and equipped for towing service, shall be available at all times to move both

self- and non-self-propelled plant against tides, current, and winds during severe weather conditions.

h. Contractors working in an exposed marine location shall monitor the National Oceanic and Atmospheric Administration (NOAA) marine weather broadcasts and use other commercial weather forecasting services as may be available.
i. The floating plant shall be capable of withstanding whatever sea conditions may be experienced in the work area during the time period the work is being performed (i.e., seaworthiness, or good “sea keeping” qualities).

2.0.5 Emergency Planning

1. On any inspected vessel, all emergency planning is to be provided in accordance with USCG requirements.
2. Plans shall be prepared for response to marine emergencies such as fire, sinking, flooding, severe weather, man overboard, hazardous material incidents, etc.
3. A station bill, setting forth the special duties and the duty station of each crewmember for various emergencies, shall be prepared and posted in conspicuous locations throughout the vessel.
4. Each crewmember shall be given a written description of, and shall become familiar with, their emergency duties and shall become familiar with the vessel's emergency signals.
5. "Abandon ship/boat" and "person overboard" procedures shall include instructions for mustering personnel.
6. On all floating plant that have a regular crew or on which people are quartered, the following drills shall be held at least monthly during each shift (unless the vessel is required, under USCG regulations, to be drilled more frequently): abandon ship/boat drills, fire drills, and person overboard or rescue drills.
    a. The first set of drills shall be conducted within 24 hours of the vessel's occupancy or commencement of work.
    b. Where crews are employed or quartered at night, every fourth set of drills shall be at night; the first set of night drills shall be conducted within the first 2 weeks of the vessel's occupancy.
    c. Drills shall include, where appropriate, how to handle a pump shell or pipe rupture or failure within the hull (proper shutdown procedures, system containment, etc.) and how to handle leaks or failures of the hull or portions of it (what compartments to secure, how to handle power losses, pulling spuds to move to shallow water, etc.).
    d. Person overboard or rescue drills shall be held at least monthly at boat yards, locks, dams, and other locations where marine rescue equipment is required.
    e. Emergency lighting and power systems shall be operated and inspected at least monthly to ensure proper operation.
    f. Storage batteries for emergency lighting and power systems shall be tested at least once every 2 months.

2.0.6 Equipment Requirements

1. All equipment shall be maintained in accordance with manufacturers recommendations and requirements, as well as the requirements of any Agency providing certifications and inspections (such as the USCG COI or Crane Inspections) for equipment, the floating plant and/or vessels.
2. Fenders shall be provided to prevent damage and sparking and to provide safe areas for workers exposed to pinching situations caused by floating equipment.
3. Axes or other emergency cutting equipment shall be sharp and provided in accessible positions on all towing vessels for use such as freeing lines. On other floating plant (i.e., work barges, and floating cranes) emergency cutting equipment shall be provided in accessible positions.

4. Signal devices shall be provided on all vessels to give signals required by the navigation rules applicable to the waters on which the vessel is operated.
5. All controls requiring operation in cases of emergency (i.e., boiler stops, safety valves, power switches, fuel valves, alarms, and fire extinguishing systems) shall be located so that they are protected against accidental operation but are readily accessible in an emergency.
6. Electric lights used on or around gasoline and oil barges or other marine locations where a fire or explosion hazard exists shall be explosion-proof or approved as intrinsically safe.
7. General alarm systems shall be installed and maintained on all floating plant where it is possible for either a passenger or crewman to be out of sight or hearing from any other person.
8. Where general alarm systems are used they shall be operated from the primary electrical system with standby batteries on trickle charge that will automatically furnish the required energy during an electrical-system failure.
9. A sufficient number of signaling devices shall be placed on each deck so that they can be distinctly heard/seen above the normal background noise at any point on the deck.
10. All signaling devices shall be so interconnected that actuation can occur from at least one strategic point on each deck.
11. For floating plant with internal combustion engines, marine quality listed CO monitors shall be installed and maintained in all enclosed occupied spaces (crew quarters, pilot houses, etc.).
12. All doors shall be capable of being opened from either side and provided with positive means to secure them in both the open and closed position.
13. Escape hatches and emergency exits shall be marked on both sides with letters, at least 1 in (2.5 cm) high, stating "EMERGENCY EXIT - KEEP CLEAR."
14. Each prime mover (engine, turbine, motor) driving a deck winch shall be capable of being stopped by controls remote from the prime mover locations.
15. Shore power receptacles shall have a grounding conductor to prevent potential difference between the shore and the vessel.
16. All 120-, 208-, and 240-volt shall be grounded and fitted with Ground Fault Circuit Interrupter (GFCI) protection.
17. Cord connected equipment used in any of the above areas shall be connected to an outlet with GFCI protection.
18. Ground-fault protected receptacles shall be conspicuously marked “GFCI PROTECTED”.
19. Where appropriate, vessels should have watertight compartments readily identified and properly maintained in a watertight condition (i.e., sealable doors in place and fully functional). Penetrations shall be maintained in a watertight condition.
20. All reciprocating, rotating and moving parts of winch gears and other equipment shall be properly guarded.

2.0.7 Fuel Systems and Fuel Transfers

1. The provisions of the Oil Pollution Act of 1990, as amended, shall apply to floating plant operations as applicable
2. Gauge glasses or try cocks shall not be installed on fuel tanks or lines unless they meet the requirements of 46 CFR 58.50-10.
3. A shutoff valve shall be installed at the fuel tank connection: arrangement shall be made for operating this valve from outside the compartment in which the tank is located and from outside the engine compartment and outside the house bulkheads at or above the weather deck of the vessel.
4. A shutoff valve shall be installed at the engine end of the fuel line unless the length of the supply pipe is 6 ft (1.8 m) or less.
5. All carburetors on gasoline engines shall be equipped with a backfire trap or flame arrestor.
6. All carburetors, except down-draft type, shall be provided with a drip pan, with flame screen, that is continuously emptied by suction from the intake manifold or by a waste tank.

7. Fuel and lubricant containers and tanks shall be diked, curbed or controlled by other means complying with USCG requirements to contain the tank contents in case of leakage in accordance with 46 CFR 98.30-15, and 33 CFR 155.320.
8. Fuel oil transfers for floating plant shall be in accordance with the provisions of USCG regulations, 33 CFR 155, and/or 33 CFR 156. For uninspected vessels, USCG regulations in 33 CFR 156.120 and 33 CFR 155.320 for fuel coupling devices and fuel oil discharge containment apply.
9. All decks, overheads, and bulkheads, serving as fuel oil tank boundaries shall indicate the tank boundary with contrasting paint and be labeled “FUEL OIL TANK - NO HOT WORK”.

2.0.8 Safe Practices

1. The Contractor shall incorporate all safe practices into their Health and Safety plan to include training and inspection by the designated competent persons.
2. Obstructing cables/lines that cross waterways between floating plant or between plant and mooring shall be clearly marked.
3. Provisions shall be made to prevent accumulation of fuel and grease on floors and decks and in bilges.
4. Swimming and/or diving shall be prohibited for all personnel, except certified divers in the performance of their duties, unless necessary to prevent injury or loss of life.
5. Wading is permitted only when there are no severe underwater hazards such as sudden drop-offs, heavy surf above 3 ft (1 m), dangerous aquatic life, etc. Personnel wading shall wear an approved PFD and shall be monitored by personnel who are nearby and equipped to conduct a rescue if needed. Wading shall be discontinued when the person’s feet cannot easily touch bottom, regardless of depth.
6. A person in the water shall be considered as a person overboard and appropriate action shall be taken.
7. When barriers or blanks are installed in piping systems as a lock-out procedure, positive means (such as protruding handles) shall be used to easily recognize their presence. Barriers shall be marked (including name of installer, name of inspector, and date of installation) and accounted for prior to installation and subsequent to removal.
8. Deck loading will be limited to safe capacity. Loads will be secured and holdbacks or rings will be provided to secure loose equipment during rough weather.
9. Safeguards such as barriers, curbs, or other structures shall be provided to prevent front-end loaders, bulldozers, trucks, backhoes, track hoes, and similar operating equipment on floating equipment from falling into the water. Whenever this equipment is operating on deck, deck surfaces of floating plant shall remain above water and the entire bottom area of a floating plant shall remain submerged.
10. Projection and tripping hazards shall be removed, identified with warning signs, or distinctly marked with safety yellow.
11. Deck cargo carried on fuel barges shall be placed on dunnage.
12. When two or more pieces of floating plant are being used as one unit, they shall be securely fastened together to prevent openings between them or the openings shall be covered or guarded.
13. When three or more floating plant are configured for stationary work, a competent person shall identify any openings between decks of stationary vessels or vessels and other structures that create fully enclosed water areas (duck ponds) into which personnel can fall. If such openings are detected, means shall be taken to protect personnel from the hazard.
14. When physical barriers are not practical, ladders and life rings shall be installed in each enclosed water area to allow personnel to self-rescue. Ladders may be a rigid type or Jacob’s ladder, and must be securely anchored to the vessel or structure. Life rings shall have a sufficient length of rope to allow them to float on the water surface and the rope shall be

securely anchored to the vessel. The number and placement of ladders and life rings shall be sufficient so that the maximum swimming distance to them is no more than 25 ft (7.9 m). Ladders and life rings may be retracted during reconfiguration or movement of plant.

15. Anchor points shall be clearly identified and shall be inspected prior to applying a load or putting cables under tension. Anchor points not structurally sound shall be cut out, removed, and/or welded over to preclude usage. Visual checks and "all clear" warnings shall be made prior to tensioning cables.
16. Provisions shall be made to protect persons being transported by water from the elements
17. Plant fleeting areas will be designated in which all idle plant shall be moored. Such areas shall have warning buoys, signs, and lights in prominent locations.
18. The Contractor or, for Government-conducted operations, the Engineer, shall provide information to the local USCG Office identifying the marine activity and hazards.
19. Open or pelican hooks may be used for lifting anchor buoys.
20. Mechanical means such as securing pins shall be used to hold spuds safely in place before transiting from one site to another
21. When there is a potential for marine activities to interfere with or damage utilities or other structures, including those underwater, a survey shall be conducted to identify the utilities or structures in the work area, analyze the potential for interference or damage, and recommend steps to be taken to prevent the interference or damage.

2.0.9 Ventilation

1. In all circumstances and configurations, all ventilation requirements on floating plants and vessels must meet all applicable codes and requirements.
2. Motor vessels or boats powered by internal combustion engines having electric spark ignition systems or having auxiliary engines of this type in cabins, compartments, or confined spaces shall be equipped with an exhaust fan(s) for ventilating engine space and bilges.
3. At least two ventilators fitted with fans capable of ventilating each machinery space and fuel tank compartment, including bilges, shall be provided to remove any flammable or explosive gases, except those vessels constructed with the greater portions of the bilges open or exposed to the natural atmosphere at all times. Note: this requirement does not apply to diesel engines.
4. Other compartment spaces within a vessel, not covered in this Section, may be naturally vented.
5. For launches and motorboats having diesel power plants not equipped with fans, ventilating shall be by natural draft through permanently open inlet and outlet ducts extending into the bilges. Inlet and exhaust ducts shall be equipped with cowls or exhaust heads.
6. For launches, motorboats (survey boats), and skiffs having deck-mounted internal combustion engines (such as generators, jigger pumps) and not equipped with fans, exhaust piping shall be located away from personnel spaces to minimize CO infiltration in the work space
7. Vent and ventilator requirements.
    a. Fans shall be rated for Class I hazardous locations and located as remotely from potential explosive areas as practical. > See Section 11.H.
    b. The vent intake shall extend to within 1 ft (0.3 m) of the bottom of the compartment
    c. Means shall be provided for stopping fans in ventilation systems serving machinery components and for closing doorways, ventilators, chases, and annular spaces around tunnels and other openings from outside these spaces in case of fire.
    d. Engines shall not be started until the engine space and bilges have been ventilated to remove fuel vapor.

2.0.10 Navigation

The most current, pertinent information published by the USCG regarding aids to navigation shall be maintained aboard self-propelled vessels 26 ft (7.9 m) or more in length.

2.0.11 Access

2.0.11.1 General

1. Means of access shall be properly secured, guarded, and maintained free of slipping and tripping hazards.
2. Non-slip surfaces shall be provided on working decks, stair treads, ship ladders, platforms, catwalks, and walkways, particularly on the weather side of doorways opening on deck.
3. Double rung or flat tread type Jacob's ladders shall be used only when no safer form of access is practical. When in use, they shall hang without slack and be properly secured.
4. Vertical ladders shall comply with ASTM F1166-95a.
5. Ladders shall not be climbed by more than one person at a time between the same set of rails.

2.0.11.2 Access To/From Vessels

Safe means for boarding or leaving a floating plant shall be provided and guarded to prevent persons from falling or slipping thereon. Walking on rip-rap should be avoided where practical.

A stairway, ladder, ramp, gangway, personnel hoist or other safe means of access shall be provided at personnel points of access with breaks of 19 in (48.2 cm) or more in elevation.

Ramps for access of equipment and vehicles to or between vessels shall be of adequate strength, be provided with sideboards, and be well maintained.

Gangways and ramps shall be:

1. Secured at one end by at least one point on each side with lines or chains to prevent overturning;
2. Supported at the other end in such a manner to carry them and their normal load during use in the event they slide off their supports;
3. Placed at an angle no greater than that recommended by the manufacturer; and
4. Provided with a standard guardrail (toe boards are optional depending on their usefulness and the hazard involved).

2.0.11.3 Access on Vessels.

Vertical access shall be provided between various decks by means of stairs, ramps, or vertical ladders installed in accordance with ASTM F1166.

Employees shall not be permitted to pass fore and aft, over, or around deck loads unless there is a safe passage.

If cargo or materials are stored on deck of barges, scows, floats, etc., the outboard edge shall not be used as a passageway unless at least 2 ft (0.6 m) of clearance is maintained.

Vessel loads shall be limited so that access and passageways in use will remain above the waterline. Decks and passageways shall not be used for access if submerged or subject to constant breaking waves, except in an emergency.

2.0.11.4 Emergency Access

Vessels, except those easily boarded from the water, shall be equipped with:

1. At least one portable or permanent ladder of sufficient length to allow a person to self-rescue by boarding the ladder from the water, and
2. Other methods or means designed to assist in the rescue of an incapacitated person overboard.
3. Two means of escape shall be provided for normal work, assembly, sleeping, and messing areas on floating plants.

4. Means of access shall be maintained as safe and functional.

2.0.12 Marine Fall Protection Systems

On decks or work surfaces 6 ft (1.8 m) or more above the main deck or 6 ft or more above adjacent vessel decks, docks, or other hard surfaces, Railing Type A or Type B, as described in Section 19.E., or bulwarks, coamings, or other structures meeting the height and strength requirements of these railing systems shall be provided except as excluded in Sections 19.C.03 and 19.C.04.

Deck edge toe boards not less than 3.5 in (8.8 cm) high for Type A and 2 in (5 cm) high for Type B railings shall be provided when the railings are used for fall protection. Toe boards shall meet the strength requirements in Section 21.F.01.f. Scuppers and/ or drainage holes may be installed as needed as long as the top edge of the toeboard is intact and the strength requirements are retained.

Personal fall protection systems meeting the requirements of Section 21.I may be used when railing systems are not installed.

Railing systems and personal fall protection systems are not considered feasible on the main deck of vessels that perform duty cycle material loading and unloading operations from barges, scows or other vessels alongside.

2.0.13 Main Deck Perimeter Protection

Main deck perimeter protection systems are intended to provide protection against falling overboard. Main deck perimeter protection is required on all manned vessels, except where excluded in Section 19.D.05. Unmanned vessels do not require perimeter protection, however, fall protection shall be provided where the vessel configuration and operation exposes personnel to falls onto a hard surface from vertical distances greater than 6 ft (1.8 m). The design parameters for the different types of main deck railing systems listed in this Section are in Section 19.E unless otherwise noted.

Manned vessels are vessels that operate with crews, or quartered personnel, or that have work areas that are occupied by assigned personnel during normal work activities.

Unmanned vessels are typically those that carry cargo such as materials, supplies, equipment, or liquids, and do not have personnel on board except during loading and unloading and during short term operations such as tie-down, inspections, etc.

Manned vessels over 26 ft (7.9 m) in length operating in unprotected or partially protected waters (as defined in 46 CFR) shall have Type B Railings provided around the deck edge, except where excluded in Section 19.D.05.

Manned vessels over 26 ft (7.9 m) in length operating in rivers or protected waters shall have Type B or Type C Railings provided around the deck edge, except where excluded in Section 19.D.05.

Type D Grab rails shall be provided on all manned vessels in the following instances:

1. On deckhouses or other similar permanent structures more than 48 in (1.2 m) from deck edge rail systems
2. On deck houses or similar permanent structures that are within 8 ft (2.5 m) of the deck edge in areas where the deck edge rail has been omitted or may be temporarily removed in accordance with Section 19.D.05.

The following are main deck areas where perimeter protection may be omitted or temporarily removed:

1. Deck perimeter rails may be omitted from deck work areas specifically intended for line handling, working over the side of the vessel, load handling operations and designated boarding areas. Railings in these areas may obstruct work or access and present additional hazards such as pinch points against railings. Such deck edge areas may include those for line handling,

fleeting scows, mooring vessels, towing, pile driving activities, and handling or placing of construction materials and equipment pipelines, and anchors.
2. Deck Perimeter rails may be omitted from main deck areas where the overall walkway width is less than 2 ft (0.6 m) between deck structures/permanent equipment and the deck edge.
3. Removable perimeter rail sections may be installed in areas where activities such as working over the side of the vessel or loading operations are not normally performed. These rails shall be maintained in place when vessel operations do not include activity in these areas or during periods of tie-up or inactivity.

When deck-edge perimeter protection is not present, standard operating procedures in the Health and Safety Plan in accordance with USCG and OSHA requirements or other documents shall be developed to address the hazards involved. These documents shall be reviewed by all crew during initial orientation and at regular intervals afterward. The following operational procedures shall be followed:

1. PFD's must be worn by personnel in areas where deck perimeter protection is not present. Such areas may be used by crew to transit or access areas of the boat, but when doing so, all other requirements of this Section must be met. Areas where railings are removed shall be blocked off from access by a suitable barrier, or shall be clearly marked as PFD- required areas by signage, deck markings, or other means;
2. Continuous sight and verbal/radio contact shall be maintained between personnel in the non-protected deck perimeter areas and the vessel operator or a designated crew member who is in sight and verbal/radio contact with the operator, and who will monitor the workers in the area;
3. A safety skiff or equivalent rescue vessel shall be readily available throughout the duration of these activities in accordance with Section 05.K.

Boats with length 26 ft (7.9 m) or less shall be provided with integrated combinations of two or more of the below listed items to provide continuous perimeter protection around the vessel: Cockpits; Coamings; Handholds; Toe Rails; Life Rails; Deck Rails; Stern Rails and Bow Rails. The installations shall be in accordance with either ABYC Standards or ISO Standard 15085, as demonstrated by a manufacturer's certificate, label or other documentation.

Marine Railing Types.

Allowable types of railings on vessels (A, B, C, & D) are identified below. Specific requirements for the vessel types and areas where each may be used are delineated in Sections 19.G and 19.H. > See Appendix F.

Railing Type A: Two-Tier Rigid Fall Protection Rail. This railing is comprised of rigid vertical stanchions and two rigid horizontal tiers in accordance with Section 21.F.01. Minimum top rail height is 42 in +/- 3 in (106.6 cm +/- 7.6 cm) and the lower horizontal tier is at half height.

Railing Type B: Three-Tier Marine Rigid or Tensioned Railing. This railing is comprised of rigid vertical stanchions and three rigid or tensioned horizontal tiers. The following parameters apply:

1. Clear spacing between tiers shall be no greater than 9 in (22.8 cm), 15 in (38 cm) and 15-in respectively. The 9-in space is closest to the deck surface. Minimum height from deck to the top tier may not be less than 39 in (99 cm).
2. The 9-in, 15-in and 15-in tier spacing above may not be exceeded.
3. The bottom tier may be omitted in way of deck fittings or in order to facilitate line handling. The space resulting from the removed lower tier may not extend more than 2 ft (0.6 m) beyond either side of the deck fitting.
4. Vertical stanchions may be pipe or structural sections. Horizontal tiers may be constructed from rigid (pipe or structural sections) or non-rigid (wire rope or chain) components, or from

combinations of these components. Non-rigid tiers must be tensioned with turnbuckles or similar components.
5. Railings may be either fixed or removable in sections. All vertical stanchions must be adequate to withstand a 200 lbs (60.9 kg) load applied horizontally at the top of the stanchion. Stanchion spacing may not exceed 8 ft (2.4 m).
6. Pipe or structural section rail components shall be sized appropriately to meet NYCDOB Code.
7. Chain or wire rope together with all connecting fittings shall have minimum breaking strength of 4,000 lbs (1814.3 kg).

Chain or wire rope horizontal tiers shall be tensioned so that:

1. There is no slack;
2. Sag does not exceed 1/4 in (.62 cm) at any point between stanchions, and
3. The lowest point from deck to the top of the upper rail may not be less than 39 in (1 at any point between the stanchions. Tensioned railing tiers shall not deflect more than 1 in (2.5 cm) under a load of 200 lbs (60.9 kg).

Solid bulwarks or coamings providing equal perimeter protection to a height of 39 in (1 m) may also be provided. Bulwarks may be constructed of structural plate and shapes. Bulwarks must meet all strength/deflection/open spacing requirements presented above for railings.

Railing Type C: Non-Tensioned Railings and Flexible or Swing-Away Railings shall consist of rigid vertical stanchions with horizontal non-tensioned chain, wire rope or rigid tiers that clip to the verticals.

Non-Tensioned Railings shall consist of horizontal tiers constructed from chain, wire rope, pipe or structural sections or combinations of these components. Vertical stanchions shall be pipe or structural sections. Vertical support spacing shall not exceed 8 ft (2.4 m).

Flexible or Swing-Away Rails shall consist of chain or wire rope tensioned vertical support lines with non-tensioned chain, wire rope or clip-on rigid horizontal tiers. Vertical support line spacing shall not exceed 6 ft (1.8 m).

Pipe or structural section rail components shall be sized appropriately to meet the performance criteria of NY Chain or wire rope together with all connecting fittings shall have minimum breaking strength of 4,000 lbs (1800 kg).

For Non-Tensioned Railings and Flexible or Swing-Away Railings, sag of horizontal tiers shall not exceed 3 in (10 cm) between vertical supports.

Non-Tensioned Railings and Flexible or Swing-Away Railings shall be configured with four or more horizontal tiers. The number of horizontal tiers shall be sufficient to meet the following requirements:

1. Effective clear spacing between the deck and bottom tier shall be no greater than 9 in (22.8 cm).
2. Effective clear spacing between all tiers above the bottom tier shall be no greater than 15 in (38.1 cm).
3. Effective minimum height from deck to the top tier may not be less than 39 in (1 m).
4. The effective tier spacing identified above includes the effect of the increased spacing associated with sag in the tiers, applied either up or down. Clear spacing measurements shall be made with the railing tiers spread to form the largest opening.
5. Railing height is reduced by the amount of sag in the tiers. Railing minimum height shall be measured at the lowest point in the rail.
6. The bottom tier may be omitted in way of deck fittings or in order to facilitate line handling. The space caused by the removed lower tier may not extend more than 2 ft (0.6 beyond either side of the deck fitting.

7. The top tier may not deflect to a height less than 39 in (1 m) above the deck under a force of 200 lbs (60.9 kg), applied vertically. In addition, the top tier may not deflect more than 12 in (30.4 cm) horizontally under a force of 200 lbs applied horizontally.

Tensioning springs in the vertical support lines, if provided, must be of the compression with drawbar type.

2.0.14 Launches, Motorboats and Skiffs

Crew requirements

In the following circumstances a qualified employee shall be assigned to assist with deck duties:

1. When extended trips including overnight trips are made from the work site;
2. When conditions of navigation make it hazardous for an operator to leave the wheel while underway;
3. When operations being performed, other than tying-in, require the handling of lines;
4. When operating at night or during inclement weather;
5. When towing; or
6. While a vessel is transporting crew or passengers.

A qualified employee is any individual who has established, to the satisfaction of the operator of the vessel that he/she is physically and mentally capable of adequately performing the deck duties to which he/she may be assigned.

Personnel and cargo requirements

1. The maximum number of personnel and weight that can safely be transported shall be posted on all launches, motorboats, and skiffs. The number of personnel (including crew) shall not exceed the number of PFDs aboard.
2. Each boat shall have sufficient room, freeboard, and stability to safely carry the cargo and number of persons allowed with consideration given to the weather and water conditions in which it will be operated.
3. Launches, motorboats and skiffs less than 20 ft (6 m) in length shall meet 33 CFR 183 requiring level floatation after flooding or swamping.
4. All open cabin launches or motorboats shall be equipped with “kill (dead man) switches”.

Float Plans

Float plans shall be prepared by the operator of a launch or motorboat when engaged in surveying, patrolling, or inspection activities that are remote and are expected to take longer than 4 hours or when the operator is traveling alone. The plan shall be filed with the boat operator’s supervisor and shall contain the following, as a minimum:

1. Vessel information (make/model or local identifier);
2. Personnel on-board;
3. Activity to be performed;
4. Expected time of departure, route, and time of return;
5. Means of communication (adequate means of communication shall be provided).

All motorboat operators shall complete and document the following training:

1. A boating safety course meeting the criteria of the USCG Auxiliary, National Association of Safe Boating Law Administrators (NASBLA), or equivalent;
2. Motorboat handling training, based on the type of boats they will operate, provided by qualified instructors (in-house or other). Operators must pass a written and operational test;
3. Current USCG licensed personnel are exempt from the boating safety training, but they shall complete the written exam and operational test;

2.0.15 Scows and Barges

Scows dumping in open ocean waters should be equipped with remote opening devices to preclude the transfer of personnel between the vessels.

A safe means for transferring personnel between the towing vessels and scow shall be provided in accordance with Section 19.B.02.

The Contractor shall identify general and site-specific adverse weather and sea conditions (e.g., currents) under which the towing of scows or cargo barges is prohibited.

All barges and scows that are used as deck cargo barges shall comply with 46 CFR 174.010 through 174.020 for intact stability of deck cargo barges.

Personal fall protection devices or other fall protection as listed hereinC shall be used on all scows and open barges to prevent personnel transiting between the stern and bow of the vessel from falling into the hopper or falling off the side of the vessel to structures (e.g. dock, vessels) located 6 ft (1.8 m) or more below.

2.0.15 Personal Flotation Devices

Inherently buoyant Type III, Type V work vests, or better USCG-approved personal flotation devices (PFDs) shall be provided and properly worn in closed fashion (zipped, tied, latched, etc.) by all persons in the following circumstances:

1. On floating pipelines, pontoons, rafts, or stages;
2. On structures or equipment extending over or next to water except where guardrails, personal fall protection system, or safety nets are provided for employees;
3. Working at night, where there are drowning hazards i.e. working over or within 5 ft of the water, regardless of other safeguards provided;
4. In skiffs, small boats, or launches, unless in an enclosed cabin or cockpit; or
5. Whenever there is a drowning hazard.

Automatic-Inflatable PFDs Type V or better, USCG-approved for Commercial Use, may be worn by workers in lieu of inherently buoyant PFDs (see conditions 05.J.01.a-eabove), provided the following criteria is met:

1. PFDs are worn only by workers over 16 years of age and those who weigh 90 lb(40.8 kg) or more;
2. An AHA shall be developed for the intended activity and shall be used to select the most appropriate PFD for the activity;
3. PFDs used in heavy construction or maintenance activities or where hot work (welding, brazing, cutting, soldering, etc.) is to be performed must be designed, tested and certified by the manufacturers for this type of work;
4. PFDs shall provide a 30-pound minimum buoyancy, post-deployment, and shall have status indicator window;
5. Personnel shall be trained in the use, maintenance, restrictions, care, storage, inspection and post-deployment procedures per manufacturer’s instructions
6. The USCG-approval for auto-inflatable PFD’s is contingent upon the PFD being worn, not stowed. All auto-inflatable PFDs must be worn at all times a drowning hazard exists
7. In-water testing is required for all first time users so that wearers become familiar with the feel and performance of the PFD.
8. All wearable PFDs shall be of an international orange (or orange/red) or ANSI 107yellow-green color.

9. Each inherently buoyant PFD shall have at least 31 in2 (200 cm of retroreflective material attached to its front side and at least 31 in2 (200 cm2on its back side, per USCG b. Each auto-inflatable PFD shall have at least 31 in2 (200 cm2
10. Each PFD shall be equipped with a USCG-approved automatically activated light. Lights are not required for PFDs on projects performed exclusively during daylight hours.
11. Before and after each use, the PFD shall be inspected for defects that would alter its strength or buoyancy.

Throwable devices (Type IV PFD).

1. On USCG-inspected vessels, ring buoys are required to have automatic floating electric water lights (46 CFR 160).
2. On all other floating plant and shore installations, lights on life rings are required only in locations where adequate general lighting (e.g., floodlights, light stanchions) is not provided. For these plant and installations, at least one life ring, and every third one thereafter, shall have an automatic floating electric water light attached.
    a. All PFDs shall be equipped with retroreflective tape in accordance with USCG requirements.
    b. Life rings (rope attachment not required) and ring buoys (rope attachment required)shall be USCG-approved; shall have at least 90 ft (27.4 m) of 3/8 in (0.9 cm) of attached solid braid polypropylene, or equivalent. Throw bags may be used in addition to life rings or ring buoys. These throwable devices and lifelines shall be inspected at a minimum, every 6 months and shall be stored in such a manner as to allow immediate deployment and will be protected from degradation from weather and sunlight. Life rings or ring buoys shall be readily available and shall be provided at the following places:
3. (1) At least one not less than 20 in (51 cm) on each safety skiff up to 26 ft (7.9 m) in length (46 CFR 117.70);
4. (2) At least one (1) 24 in (61 cm) in diameter on all motor boats longer than 26 ft (7.9m) in length up to 65 ft (19.8 m) in length and for motor boats 65 ft (19.8 m) in length or longer, a minimum 3 life buoys of not less than 24 in (61 cm) and one additional for each increase in length of 100 ft (30.4 m) or fraction thereof; and
5. (3) At least one (1) at intervals of not more than 200 ft (60.9 m) on pipelines, walkways, wharves, piers, bulkheads, lock walls, scaffolds, platforms, and similar structures extending over or immediately next to water, unless the fall distance to the water is more than 45 ft (13.7 m), in which case a life ring shall be used. (The length of line for life rings at these locations shall be evaluated, but the length may not be less than 90 ft (27.4 m).

2.0.16 Lifesaving and Safety Skiffs

During construction activities, at least one skiff shall be immediately available at locations where employees work over or immediately next to water. Note: This requirement is applicable to any Operations and Maintenance activities that cause an employee to work outside the designed, permanently installed safety controls(i.e., guardrails).

Personnel trained in launching and operating the skiff shall be readily available during working hours. Lifesaving personnel shall perform a lifesaving drill, including the launching and recovery of the skiff, before the initiation of work at the site and monthly thereafter. All records of drills shall be maintained on site and a copy provided to the Engineer.

Skiffs shall be kept afloat or ready for instant launching.

Required equipment must be onboard and meet or exceed USCG requirements. Skiffs shall be equipped as follows:

1. Four (4) oars (two (2) if the skiff is motor powered);

2. Oarlocks attached to gunwales or the oars;
3. One (1) ball-pointed boat hook;
4. One (1) ring buoy with 90 ft (21.3 m) of 3/8 in (0.9 cm) solid braid polypropylene, or equivalent, line attached; and
5. PFDs in number equaling the skiff rating for the maximum number of personnel allowed on board.
6. Fire Extinguisher.
7. In locations where waters are rough or swift, or where manually operated boats are not practical, a power boat suitable for the waters shall be provided and equipped for lifesaving.

Skiffs and power boats shall have buoyant material capable of floating the boat, its equipment, and the crew.

On vessels (such as skiffs) without permanently mounted navigation lights, portable battery-operated navigation lights will be available and used for night operations.

3.0 VESSEL GENERAL PERMIT FOR DISCHARGES INCIDENTAL TO THE NORMAL OPERATION OF VESSELS (VGP) AUTHORIZATION TO DISCHARGE UNDER THE NATIONAL POLLUTANT DISCHARGE ELIMINATION SYSTEM (NPEDES)

3.01 Reference

https://www3.epa.gov/npdes/pubs/vessel_vgp_permit.pdf

3.02 VGP Authorization

Contractor is required to obtain the VGP Authorization under the NPEDES program with the EPA for all vessels on the project as follows:

1. To obtain authorization under this permit, you must meet the Part 1.2 eligibility requirements. If your vessel meets the requirements under Part 1.5.1.1, you must submit a Notice of Intent (NOI) to receive permit coverage.
2. Prior to NOI submission, owner/operators of these vessels are authorized to discharge under this permit. This automatic authorization extends until owner/operators of vessels that meet the requirements under Part 1.5.1.1 submit NOIs, but shall not extend beyond 9 months after permit issuance.
3. Owner/operators of vessels that meet the requirements under Part 1.5.1.2 are automatically authorized to discharge under this permit and are not required to submit NOIs.

3.03 General Scope of the VGP

This permit is applicable to discharges incidental to the normal operation of a vessel identified in Part 1.2.2 into waters subject to this permit. These waters are “waters of the United States” as defined in 40 CFR 122.2 (extending to the outer reach of the 3 mile territorial sea as defined in section 502(8) of the CWA.) This includes all navigable waters of the Great Lakes subject to the jurisdiction of the United States. Recreational vessels as defined in section 502(25) of the Clean Water Act are not subject to this permit. Such vessels are not subject to NPDES permitting under Section 402 of the Clean Water Act, and are instead subject to regulation under Section 312(o) of the Clean Water Act. In addition, with the exception of ballast water discharges, non-recreational vessels less than 79 feet (24.08 meters) in length, and all commercial fishing vessels, regardless of length, are not subject to this permit. See P.L. 110-299. Commercial fishing vessels and other non-recreational vessels less than 79 feet are eligible for permit coverage under this permit for their ballast water discharges. If auxiliary vessels or craft, such as lifeboats, rescue boats, or barges onboard large vessels require permit coverage (i.e. they are greater than 79 feet in length), they are eligible for coverage under this permit and are covered by

submission of the Notice of Intent for the larger vessels. Nothing in this permit shall be interpreted to apply to a vessel of the Armed Forces as defined in § 312(a)(14) of the Clean Water Act.

Vessel Discharges Eligible for Coverage Unless otherwise made ineligible under Part 1.2.3, the following discharge types are eligible for coverage under this permit:

1. Deck Runoff and Above Water Line Hull Cleaning
2. Bilgewater/Oily Water Separator Effluent
3. Ballast Water
4. Anti-fouling Leachate from Anti-Fouling Hull Coatings/Hull Coating Leachate,
5. Aqueous Film Forming Foam (AFFF)
6. Cathodic Protection
7. Chain Locker Effluent
8. Controllable Pitch Propeller and Thruster Hydraulic Fluid and other Oil Sea Interfaces including Lubrication discharges from Paddle Wheel Propulsion, Stern Tubes, Thruster Bearings, Stabilizers, Rudder Bearings, Azimuth Thrusters, and Propulsion Pod Lubrication
9. Graywater
10. Motor Gasoline and Compensating Discharge
11. Non-Oily Machinery Wastewater
12. Refrigeration and Air Condensate Discharge
13. Seawater Cooling Overboard Discharge (Including Non-Contact Engine Cooling Water; Hydraulic System Cooling Water, Refrigeration Cooling Water)
14. Boat Engine Wet Exhaust
15. Underwater Ship Husbandry

4.0 REFERENCE A

Reference A: OSHA Standards (29 CFR) for Waterfront Construction and Working Near Water

4.01 1926.605 Marine Operations and Equipment

Operations fitting the definition of "material handling" shall be performed in conformance with applicable requirements of Part 1918, "Safety and Health Regulations for Longshoring" of this chapter. The term "longshoring operations" means the loading, unloading, moving, or handling of construction materials, equipment and supplies, etc. into, in, on, or out of any vessel from a fixed structure or shore-to-vessel, vessel-to-shore or fixed structure or vessel-to-vessel.

4.02 1926.605(b) Access to Barges

Ramps for access of vehicles to or between barges shall be of adequate strength, provided with side boards, well maintained, and properly secured.

Unless employees can step safely to or from the wharf, float, barge, or river towboat, either a ramp, meeting the requirements of paragraph (b)(1) of this section, or a safe walkway, shall be provided.

Jacob's ladders shall be of the double rung or flat tread type. They shall be well maintained and properly secured.

A Jacob's ladder shall either hang without slack from its lashings or be pulled up entirely.

When the upper end of the means of access rests on or is flush with the top of the bulwark, substantial steps properly secured and equipped with at least one substantial hand rail approximately 33 inches in height, shall be provided between the top of the bulwark and the deck.

Obstructions shall not be laid on or across the gangway.

The means of access shall be adequately illuminated for its full length.

Unless the structure makes it impossible, the means of access shall be so located that the load will not pass over employees.

4.0.3 1926.605(c) Working Surfaces of Barges

Employees shall not be permitted to walk along the sides of covered lighters or barges with coamings more than 5 feet high, unless there is a 3-foot clear walkway, or a grab rail, or a taut handline is provided.

Decks and other working surfaces shall be maintained in a safe condition.

Employees shall not be permitted to pass fore and aft, over, or around deck loads, unless there is a safe passage.

Employees shall not be permitted to walk over deck loads from rail to coaming unless there is a safe passage. If it is necessary to stand at the outboard or inboard edge of the deck load where less than 24 inches of bulwark, rail, coaming, or other protection exists, all employees shall be provided with a suitable means of protection against falling from the deckload.

4.0.4 1926.605(d) First-Aid and Lifesaving Equipment

Provisions for rendering first aid and medical assistance shall be in accordance with Subpart D of this part.

The employer shall ensure that there is in the vicinity of each barge in use at least one U.S. Coast Guard-approved 30-inch lifering with not less than 90 feet of line attached, and at least one portable or permanent ladder which will reach the top of the apron to the surface of the water. If the above equipment is not available at the pier, the employer shall furnish it during the time that he is working the barge.

Employees walking or working on the unguarded decks of barges shall be protected with U.S. Coast Guard-approved work vests or buoyant vests.

4.0.5 1926.605(e) Commercial Diving Operations

Commercial diving operations shall be subject to Subpart T of Part 1910, 1910.401-1910.441, of this chapter.

4.0.6 1926.106 Working Over or Near Water

Employees working over or near water, where the danger of drowning exists, shall be provided with U.S. Coast Guard-approved life jacket or buoyant work vests.

Prior to and after each use, the buoyant work vests or life preservers shall be inspected for defects which would alter their strength or buoyancy. Defective units shall not be used.

Ring buoys with at least 90 feet of line shall be provided and readily available for emergency rescue operations. Distance between ring buoys shall not exceed 200 feet.

For all work which will be performed over or near water as defined in 29 CFR 1926.106(d) the Contractor shall have a skiff in the water at all times as required by regulation. The skiff must meet US Coast Guard requirements and be manned by a person holding a Masters license for the craft and be trained in water rescue.

B4. U.S. COAST GUARD REQUIREMENTS

1.0 GENERAL

1.0.1 Scope

Requirements set forth herein are in addition to and shall be considered as complementary to the balance of the Contract requirements.

For all operations to be performed in, on, or over the Lower New York Bay, East River, Harlem River, Broad Channel, Rockaway Inlet, or other adjacent waterways, as applicable to the Contract, the Contractor shall comply with all applicable government requirements and regulations pertaining to the Work. The securing of permits necessary for the performance of this Work shall be routed through the Engineer.

Notification and Request for Approval Requirements

At no time during the Work will the following activities be permitted without prior notification and specific approval of the USCG Sector New York Waterways Management Division for location and duration:

- Closing the waterways.
- Removing or restricting existing navigation lights and/or markings.
- Reducing or altering vertical or horizontal clearances.

All requests shall be routed through the Engineer a minimum of 30 days before the action will be required If, in the case of waterway closures, the scheduled Work cannot be completed within the approved closure period, notify the U.S. Coast Guard (USCG) immediately upon learning of the delay. With the approval of the USCG, the work shall continue on a 24-hour basis until the waterway is restored to normal operation. The USCG and the Engineer shall be immediately notified when normal operation is restored.

1.0.1.1 Port of New York / New Jersey Security Provisions

Security Zone / Exclusionary Area

- A twenty-five (25) yard (23 m) Security Zone / Exclusionary Area, has been established by the U.S. Coast Guard around all bridge piers in the New York / New Jersey area.

Advance Written Approval Requirements

- No construction workers, work barges or vessels of any type may enter these Security Zones without advance written approval from the U.S. Coast Guard Captain of the Port, NY District, through the Waterways Management Division, and the Vessel Traffic Service Activities New York (VTS).
- All requests made by the Contractor through the Engineer to enter into these Security Zones must be made in writing, not less than 30 days prior to the commencement of any work, to USCG Sector New York Waterways Management Division, in accordance with the forms attached to this specification, with a copy to the Engineer. Contractor shall comply with all Security Zone requirements of the U.S. Coast Guard, even if different than those set forth here, at no additional cost to the Department.

Initial Submittal and Information Requirements

- Submit a complete list of all construction personnel or persons that will enter into the Security Zones, including name, Social Security Number, Date of Birth, Contractor’s Business Name, Business Address, Point of Contact / Responsible Person in- Charge of Work Activities

(Construction Superintendent) and Telephone Numbers (Main Office, Field Office Numbers and Cell Phones).
- Submit Project and Work Description and include descriptions of work activities and work site in the Security Zone, together with work location(s), dates, times and Project Duration, Barge/Vessel/Boat Name(s) / Type(s) & Size(s).
- Submit a Bridge Branch Construction Approval Letter.
- Submit above items to the U.S. Coast Guard Waterways Oversight Branch (USCG/WOB), and call (718) 354-4193 or 4355 to make the required arrangements, not less than 30 days in advance of any work, with a copy to the Engineer.

Changes Subsequent to Approval by the USCG/WOB

- If any changes are made to the information provided and approved including, but not limited to, additional personnel hired or any other changes in the existing personnel roster, a revised written submission is required.
- Submit all information for approval, including all revisions to the required information, as identified above, to the U.S. Coast Guard Waterways Oversight Branch not less than ninety-six (96) hours / four (4) days in advance of the expected change, with a copy to the Engineer.

Daily Notification Requirements

- After the initial written approval for entry into the Security Zone has been received from the U.S. Coast Guard, (USCG) the Contractor is to first notify the U.S. Coast Guard / Vessel Traffic Service at (718) 354-4088 on a daily basis, while working within the Zone; and upon contacting the USCG, immediately report to the Engineer the context and outcome of all communications with the USCG.
- Daily notification shall include, but not limited to, the following times when entering or leaving the Security Zone during any part of a day:
  1. Prior to entering the Work Site at the start of each workday.
  2. Prior to leaving the Work Site at any time during the workday.
  3. Prior to returning to the Work Site at any time during the workday.

Upon securing the work site at the end of the workday.

- The Contractor shall notify the Engineer 24 hours in advance of any change in the location of the Contractor’s operations within a Security Zone.

2.0 REFERENCES

Part 26, Title 33, Code of Federal Regulations (33 CFR26) Vessel Bridge-to-Bridge, Radio Telegraphic Regulations.

Navigation Rules International – Inland, U.S. Government Printing Office Stock # 050-012-00376-9.

3.0 EXECUTION

3.0.1 Protection of Marine Traffic and Waterways

Conduct the Work in conformity with the orders of the Commander (OBR), First U.S. Coast Guard District. Battery Park Building, New York, NY 10004-5073 and/or the District Construction Manager, U.S. Army Corps of Construction Managers in charge of the locality so as not to obstruct or endanger navigation.

3.0.2 Plan Reviews

Four copies of the Contractor's plans, schedule and sequences of operations, and method of preventing any material from being discharged or falling from the construction area, approved by the Engineer, shall be transmitted to the U.S. Coast Guard by the Engineer. The Engineer will submit plans, schedules, methods and sequences of operations to the First U.S. Coast Guard District, Bridge Branch Commander (OBR) First U.S. Coast Guard District, Battery Park Building, New York, N.Y. 10004-5073, (212) 514-4338, for U.S. Coast Guard approval 30 days prior to any proposed work over the waterway. In addition, a sketch of the work area shall be submitted showing:

- The waterway.
- The bridge.
- The location of any restriction that will be placed in the waterway such as barges, anchors and anchor lines.
- The location, height above mean high water and a detailed description of any scaffolding or netting to be used.

The schedule should also include the daily hours of operation and indicate whether waterborne equipment will remain in the waterway at night. Daytime and twenty-four (24) hour emergency telephone numbers with personnel responsible for this work shall be forwarded to the USCG via the Engineer before commencement of Waterway-related construction. This information shall be updated immediately if any changes occur.

3.0.3 Modification to USCG Approved Plan

One copy of the plan and schedule of operation, and letter of approval by the U.S. Coast Guard, shall be retained by the Engineer. No deviation from the approved plan and schedule of operation may be made unless the modification has previously been submitted to and approved by the U.S. Coast Guard and the Engineer.

3.0.4 Hot Work

Positive means shall be taken to prevent sparks, molten metal and/or any hot work, debris, discharge of waste materials or construction material from entering the waterway or onto passing vessels. This includes sandblasting material, paint, wastewater, and any concrete or steelwork by-products. A safety section in the overall plan must be included that will achieve this purpose by utilizing fire resistive devices made of plywood and canvas suitably connected.

Where welding or burning is to take place, suitable flame-proof material shall be the uppermost protective containment material to arrest the fall of sparks or molten materials. All welding, burning, and slag removal shall cease upon approach of a vessel and not start again until the vessel has passed.

The Contractor's Supervisor shall be equipped with a complete communication system before commencement of any hot work, in accordance with information provided throughout this Section.

Hot work shall not commence unless communication has been established with the U.S. Coast Guard. An observer or observers shall be stationed so as to have unimpeded views of both upstream and downstream accesses to the waterway area thereby assuring that all workers can be alerted of a vessel's approach by appropriate means, such as an air horn.

3.0.5 Work Platforms

For work requiring outboard floats and/or for work on or under marine structures in the navigable waterway, deck, a fireproof canvas dodger shall be installed to prevent the fall of objects and debris into the water.

During night work, all around white lights or red lights to indicate safe passage around structures in the navigable waterway shall be mounted to indicate to mariners the locations of the work. All

structures lighting and day marks shall be submitted through the Engineer to the USCG for approval prior to commencement of work.

During daylight, warning signs for a 3-mile (4.8 km) range shall mark the locations of the work platforms. The signs shall face upstream and downstream so as to draw mariner's attention to the fact that critical work, affecting moving traffic, is occurring. A canvas dodger or netting shall be attached to the scaffold guardrail to prevent objects that bounce on the deck from ricocheting off the deck and into the waterway.

If permanent bridge or fender navigational lighting cannot be maintained operable or will be blocked, identical, temporary battery or electrically-operated lights shall be installed at the same locations. These temporary lights shall be visible for a distance of 2,000 yards (1.829 kilometers) on 90% of the nights of the year. Generally, a lamp of 100 candles will meet these requirements. The temporary lights shall be in place until the repairs have been completed or permanent navigational lighting has been reinstalled and determined to be operating satisfactorily. Locate and detail temporary lighting. If temporary lights are not installed in the same locations as the permanent lights, specific information regarding proposed locations compared to the permanent positions shall be provided to the Engineer for submission to and approval by the USCG.

3.0.6 Obstructions in Navigable Channel

During the progress of Work, should any materials, machinery, or equipment be lost, dumped, thrown overboard, or sunk, so as to obstruct, interfere with, or create a hazard to navigation, immediate notice shall be given to the U.S. Coast Guard and the object removed immediately. Until removal can be effected, the obstruction shall be properly marked in order to protect navigation.

Notice to the U.S. Coast Guard shall include a description and location of any such object and the action taken, or being taken, to protect navigation, and of action to remove the obstruction. Notice shall be given to the Captain of the Port– New York and New Jersey, at (718) 354-4119/4120 and U.S. Coast Guard Bridge Administration at (212) 668-7021/7165.

If, in the opinion of the Engineer, all obstructions in the channel resulting from the operations (through negligence, accident or otherwise) have not been removed, an inspection of the waterway bottom must be performed and remaining obstructions shall be removed, at no extra cost to the NYDDC.

After the completion of the work on or under the deck, the Contractor shall certify in writing to the Engineer that all equipment is accounted for and that all unused construction materials have been legally disposed.

3.0.7 Spills

Spillage of oil and/or hazardous substances is specifically prohibited by Section 311 of the Clean Water Pollution Control Act of 1971, as amended.

During the work, preventative measures to be taken include:

- Proper maintenance of construction equipment.
- Arrangement of fuel/hazardous substances handling areas so as to ensure that any spills are contained before reaching navigable waterways or their adjoining shoreline. In addition, the Engineer must be notified immediately.
- Instructions to personnel to legally dispose of oil and/or hazardous substances and not into drains, navigable waterways, or onto adjoining shorelines.

The USCG Captain of the Port and the Engineer shall be notified immediately at Commander, U.S. Coast Guard Activities New York, 212 U.S. Coast Guard Drive, Staten Island, NY 10305, (800-424-8802) or (718) 354-4119/4120 in the event of any spill.

A supply of an absorbent material shall be maintained at the work area(s) so that it may be rapidly deployed to soak up any possible spillage, pending U.S. Coast Guard arrival on the scene. The use of chemical dispersing agents and emulsifiers is not permitted without prior, specific USCG approval.

3.0.8 Floating Work Platforms

Floating work platforms equipment shall not interfere with operations in any federally maintained navigable channel. Floating equipment shall have a radiotelephone capable of operation from its main control in accordance with Part 26 Title 33, Code of Federal Regulations and shall be monitored during all periods the floating equipment is in operation.

Placement of construction equipment in the navigable channel shall be done so as not to reduce minimum horizontal clearance. Floating work equipment (barges, etc) must be moved out of the navigable channel during darkness, or after work hours. Work equipment remaining in the channel (if approved by USCG) during periods of darkness or reduced visibility must be lighted in accordance with Navigation Rules International – Inland.

Work barges remaining in the channel (if approved by the USCG) shall meet the following requirements:

- Must be lighted in accordance with Navigation Rules International-Inland.
- Shall be manned 24 hours a day 7 days per week.
- Shall have sanitary facilities and USCG approved safety equipment.
- Shall have a USCG approved motorized emergency tender boat with safety equipment.

The USCG must be notified, via the Engineer, at least three weeks in advance of the placement of equipment in the channel.

3.0.9 Dumping

Should any person throw construction materials into the waterway, they will be subject to prosecution under Federal and State laws.

3.0.10 Fleet Week

During “Fleet Week”, no reduction in vertical or horizontal clearances will be authorized; this includes work platforms, travelers, barges, tarps, etc.

3.0.11 Communication System

The Contractor’s Supervisor and all other applicable personnel involved shall be provided and equipped with a two-way communication system consisting of VHF-FM marine radio(s) capable of monitoring channels 13 and 16 during hours of operation, for the duration of the Work.

The Supervisor shall contact U.S. Coast Guard ActNy-VTS via marine radio, establish and maintain radio communications at all times, which shall include obtaining approval before commencement of any hot work, or any other work which may be considered hazardous to (or interfere with) marine traffic.

In the event of a radio failure, the Contractor shall provide a cellular phone(s) as a backup communication system, which shall be kept readily on hand, at all times, for use by the Contractor’s Supervisor and all other applicable personnel involved. The cellular phone(s) shall be capable of contacting the U.S. Coast Guard ActNy- VTS at (718) 354-4088.

The Contractor shall deliver to the Engineer a complete remote base station type VHF-FM marine radio system capable of monitoring, receiving, transmitting and amplifying all communications between and with the Contractor and/or the U.S. Coast Guard, as well as, other marine transmissions in the area, unless hand held units and related systems are deemed to be sufficient by the Engineer.

Test all communication systems at least 30 days prior to the need. Weekly test and regularly maintain all communication system equipment.

Provide sufficient spare equipment and parts to prevent any disruption in communications.

Provide additional communication system equipment as necessary to amplify the signal, as well as assist in maintaining clear and audible communications at all times.

U.S. Department of Homeland Security
United States Coast Guard

Commander
United States Coast Guard
Sector New York

212 Coast Guard Drive
Staten Island, NY 10305
Staff Symbol: (wwm)
Phone: (718) 354-4195
Fax: (718) 354-4190

Coast Guard Sector New York Request for Marine Activity Approval

Instructions: Type or print clearly and email to Jeff.M.Yunker@uscg.mil or fax to (718) 354-4190. **USCG notification, review and approval will generally take a MINIMUM of 5 business days. Authorization to proceed will not be given until five (5) days after Coast Guard approval is granted. This timeline also applies to any revisions to an approved project. Applicants must plan accordingly. Authorization is granted under the Ports and Waterways Safety Act (33 USC 1225(a)(2)(C). Violations of required safety measures may subject you to civil penalty proceedings in accordance with 33 CFR 1.07.**

Approval is required for all Activities: 1. Within any charted or Federal Channel, 2. Outside of the Pierhead Line on the East and Hudson Rivers, Upper New York Bay, and The Narrows, 3. Within the highlighted waters of the western Long Island Sound approach to NY Harbor (see attachment). Requests for Notice to Mariners outside of these work areas must be faxed to 617.223.8073 or emailed to LNM@uscg.mil by Tuesday for Thursday publication.

Pre-approval not required for: Diving Operations (outside of channel) or Side-scan, towed sonar, or other surveys, conducted as per the Inland Navigation Rules, within the VTS AOR. Just check in with VTS 15 minutes before beginning and upon completion each day at 718.354.4088. Surveys outside the VTS AOR do not need Coast Guard approval.

BRIDGE PROJECTS, INSPECTIONS, SURVEYS, ETC MUST BE APPROVED BY THE CG BRIDGE PROGRAM, CONTACT 212.668.7021 FOR GUIDANCE.

UNMANNED VESSELS WILL NOT BE AUTHORIZED OVERNIGHT IN FEDERAL CHANNELS.

Failure to properly notify the Coast Guard WILL result in project delay.

Company and Administrative Point of Contact:			
Address:			
Phone:		Fax:	
Project Location:			
Project Description:			
Start Date:	Finish Date:	Work Days: 7 Days	Work Hours:
Position of Equipment (detailed physical description):			
Vessels on Scene (Include Vessel name, description, length, beam, State Registration number):			
24-hr On-Scene Contact:			

B5. GREENHOUSE GAS EMISSIONS

The Contractor is encouraged to take steps to reduce the greenhouse gas emissions resulting from this Contract. To this end, the Contractor is strongly encouraged to take the following steps:

1. Use B20 biodiesel (ASTM D7467) in all non-road and marine equipment.
2. Maximize the use of recycled steel and aluminum in the permanent materials.

The Contractor is required to monitor the Contractor's performance on these steps and provide reports with supporting documentation showing the actual performance achieved.

B6. EMPLOYMENT OPPORTUNITIES

1. The Contractor's attention is drawn to the following contract requirements for providing employment opportunities:
    a. HireNYC. Requirements are in the Standard Construction Contract found in Volume 2.
    b. Section 3. Requirements are in the HUD-Pages found in Volume 3.
2. Additionally, the following requirements apply:
    a. Apprentices: The Contractor must request the maximum allowable ratio of apprentices.
    b. Sandy Recovery Hiring Plan: The Contractor is required to develop and implement a Sandy Recovery Hiring Plan for low-income and very low-income persons, Sandy-impacted residents, minorities, and women in accordance with the provisions set forth below.
    c. The following requirements are part of this Contract and will be passed on to all applicable Subcontractors:
        i. Contractor and Subcontractors are encouraged to employ 20 percent Sandy-impacted residents.
        ii. Contractor and all Subcontractors agree to register all non-trade job opportunities arising from the Work under this Contract with Sandy Recovery Workforce1, managed by the NYC Department of Small Business Services and comply with the provisions set forth below.
        iii. This section does not limit Contractor's or its Subcontractors' ability to assess the qualifications of prospective workers, and to make final hiring and retention decisions. No provision of this section shall be interpreted so as to require a Contractor or Subcontractor to employ a worker not qualified for the position in question, or to employ any particular worker.
3. Strategies and Methods
    a. The Sandy Recovery Hiring Plan shall demonstrate the Contractor's capability and plan for ensuring compliance with the hiring requirements.
    b. In an effort to provide pathways for hiring of persons impacted by Sandy, the Contractor is encouraged to work with local community-based organizations, pre-apprenticeship and apprenticeship programs, and voluntary groups engaged in rebuilding efforts.
    c. The Contractor will work with Workforce1 and the City on specific outreach events including Resource Fairs and Hire on the Spot events, connecting Sandy-impacted residents with job opportunities.
    d. The Sandy Recovery Hiring Plan should show plans to work with organizations to create a pathway and opportunities on these projects and a plan to show compliance with the hiring requirements.
4. Management and Compliance
    a. The Contractor must develop a Sandy Recovery Hiring Plan for approval by the Engineer.
    b. The Contractor must provide at least one part-time staff dedicated to tracking hiring daily at the job site and ensuring implementation of the requirements of the Plan. The Contractor must comply with monthly reporting requirements set forth by the City, which include, but are not limited to, data that the City is required to report under Local Law 140 of the City of New York and Section 3 of the Housing and Urban Development Act of 1968, as well as data collection related to Executive Order 11246.

5. Specific Requirements
    a. Job Posting Requirements: The Contractor and all subcontractors agree to inform Sandy Recovery Workforce1, managed by NYC Department of Small Business Services, of all job opportunities arising from this Contract. The Contractor must inform Sandy Recovery Workforce1 of any hiring need, and the requirements of the jobs to be filled, no less than three weeks prior to the intended first day of employment for each new position, unless otherwise approved by the City. Sandy Recovery Workforce1 will work with Contractor to develop a recruitment plan which will outline clear instructions as to when, where, and how interviews will take place. Sandy Recovery Workforce1 will screen applicants based on employer requirements and refer applicants whom it believes are qualified to the Contractor for interviews. The Contractor must interview referred applicants whom it believes are qualified, and must provide feedback on all interviewed candidates within two business days and report new hires to Sandy Recovery Workforce1 once confirmed.
    b. Sandy-impacted residents will be given first priority to register for opportunities with the rebuilding effort on-line and at Workforce1.
6. Workforce Recordkeeping Requirements: The Contractor must comply with monthly reporting requirements set forth by the City, which include, but are not limited to, data that the City is required to report under Local Law 140 of the City of New York and Section 3 of the Housing and Urban Development Act of 1968, as well as data collection related to Executive Order 11246. The Contractor must provide the Engineer with a Monthly Report of such data by the fifteenth of every month for the prior month using the paper and/ or electronic reporting format provided by the Engineer and must complete all applicable fields. If reporting particular information is impossible for the Contractor, the Contractor may apply for an exemption. Any application for an exemption must be made before the expiration of thirty (30) days after the commencement date of this Agreement and shall be in the form specified by the Engineer. Exemption may be granted upon a showing that the operation of this Section will constitute a hardship, within the sole discretion of the Commissioner. The content of this Monthly Report may change at any time as the City's reporting needs change.

□□ Furthermore, the Contractor must complete weekly Certified Payroll reports using the WH-347 form, available from the U.S. Department of Labor, Wage and Hour Division, which may be submitted each month concurrent with the aforementioned Monthly Report.□

B7. WORK RESTRICTIONS

The Contractor's attention is drawn to the following work restrictions:

1. NYC Ferry: Public access to the Corlear's Hook NYC Ferry Terminal must be maintained at all times.

The Contractor is notified of the following official activities that will affect roadway work within the project limits:

1. DOT Weekend Walks – LUNGS Spring Awakening
2. Macy's 4th of July Annual Fireworks Celebration
3. New York Road Runners (NYRR) - NYC Half Marathon

The Contractor will be required to accommodate these activities at no additional cost, per the requirements of Standard Highway Specifications Section 6.70.11.(I).

B8. VALUE ENGINEERING CHANGE PROPOSAL (VECP)

A. Purpose and scope. The purpose of a Value Engineering Change Proposal (VECP) is to encourage the use of the Contractor's ingenuity and experience in arriving at alternative construction designs, methods, and procedures that result in a lower direct cost to accomplish a contract requirement. It is the intent of this provision to share with the Contractor any substantial direct cost savings which may be generated as a result of a VECP offered by the Contractor and approved by the Engineer. A VECP is a Contractor-initiated change request. If approved, the changes and payments will be authorized through the change order process. Before a VECP can be implemented, it must pass through three approval processes: conceptual approval, formal approval, and change order approval. To expedite the review process, the Contractor has the option of jointly submitting the conceptual VECP and the formal VECP for simultaneous review. If the VECP receives formal approval, as part of the change order process the Contractor may request that the Engineer consider granting advanced authorization of extra work.

The VECP should produce direct cost savings to the City and the public without, in the sole judgment of the Engineer, impairing essential functions and characteristics of the facility including but not limited to service life, economy of operation, ease of maintenance, desired appearance, and safety. The Contractor, when developing a VECP, shall address the designer's objectives, environmental permit requirements and regulations, commitments made to the public to mitigate the impact of construction, and other such concerns.

The "direct cost savings" is the difference of the "construction savings" generated by implementing the VECP minus reasonable "design costs" associated with the VECP. The "construction savings" is the difference between what it would cost to complete all the contract work without implementing the VECP and the cost to complete all the contract work if the VECP is implemented. This includes any changes to quantities or unit prices across the entire contract if affected by the VECP. If the estimated cost to complete all the contract work without implementing the VECP differs from the contract bid amount for the work, supporting documentation to explain the variance shall be provided. Reimbursable "design costs" are specific to engineering changes (examples: design changes, plan sheet revisions, and quantity estimating). Expenditures toward proposal preparation (examples: scheduling, documentation, cost analysis, material research, etc.) are not reimbursable.

Indirect cost savings (time, user delay, railroad force account costs, inspection costs, etc.), although considered when reviewing the merits of the VECP, are not reimbursed. A VECP may alter the progress schedule and milestone dates, which in turn could affect time-related contract provisions.

Proposals that reduce the time to complete the contract, and only result in indirect cost savings, may be accepted based on the mutual benefit derived. These proposals will be evaluated in accordance with sub-provision F. Time Savings, below.

B. Submittal of Conceptual VECP. A conceptual proposal is required for all VECP. It should outline the general technical concepts associated with the VECP and the estimated direct cost savings which may result. Upon review by the Engineer, one of the following actions will be taken:

- Conceptual approval and a request for the Contractor to submit a formal VECP.
- Request for additional information.
- Rejection of the VECP.

The Contractor shall submit an original and three copies of the conceptual VECP to the Engineer along with any additional information requested by the Engineer. The conceptual VECP should contain sufficient information for concept review and evaluation, including the following as a minimum:

1. Conceptual VECP Summary. A summary of the VECP identified as "Conceptual VECP" which includes:

a. Short title (description) of the VECP (10 or less words).

b. Contract information (Contract ID number, contract description, contractor).

c. Original total contract bid price.

d. Estimated contract cost. This may be different from the original total contract bid price due to addition or alteration of work (i.e., the estimated cost to complete the work if the VECP is not implemented). The Engineer must concur with the estimated contract cost.

e. Estimated contract cost if the VECP is implemented (excludes VECP design cost and any VECP construction savings reimbursement).

f. Estimated VECP construction savings (Item d. minus Item e.).

g. Estimated VECP design cost (Not all VECP will have design cost).

h. Estimated direct cost savings due to the VECP (Item f. minus Item g.).

i. Fifty percent of the estimated direct cost savings (This should equal the overall savings to the City).

j. Estimated total adjusted contract cost if VECP is implemented (includes VECP savings and design cost reimbursements).

k. The type of VECP (either "Cost Savings" or "Time Savings Only").

l. Date by which the authorization of extra work (change order) must be granted.

m. Identification of any new or existing contract pay items requiring agreed prices.

n. Identification of any materials with long lead times (to order, fabricate, deliver, etc.) that may require purchase authorization from the Engineer prior to formal approval/disapproval of the VECP, or may delay the implementation of the VECP. Identify any date by which authorization to order these materials must be received without affecting the progress schedule.

o. A basic description of the VECP and associated benefits and impacts (progress schedule, environmental, maintenance & protection of traffic, quality, etc.).

2. Conceptual Plans. Conceptual plan drawings.

3. Design Criteria. If the VECP proposes design changes, supporting technical design criteria shall be provided.

4. Schedules.

    a. The most recently approved baseline progress schedule.

    b. The most recently approved construction progress schedule update.

    c. A draft, proposed, revised progress schedule illustrating the impacts of the VECP. The schedule shall identify: (1) the time required to develop a formal VECP; (2) the time required to order, fabricate, and deliver materials with long lead times; (3) the time required to obtain any environmental permits or other required approvals; (4) any anticipated progress schedule changes (contract completion date, milestone dates, task durations, etc.); (5) the latest date by which authorization of the VECP extra work must be granted without affecting the schedule.

    The draft progress schedule should provide a sufficient level of detail upon which the reasonableness of the VECP can be determined.

Should the Engineer find that insufficient time is available for review and processing, it may reject the VECP solely on such basis. If the Engineer fails to respond to the VECP by the date specified, the Contractor will consider the VECP rejected and will have no basis for a dispute against the City as a result thereof. The Engineer may accept a VECP that requires a contract time extension if sufficient cost savings are anticipated.

5. Estimate of costs. The conceptual VECP estimate of costs should include sufficient information to determine the reasonableness of the VECP. If the proposal requires the ordering of materials, the Contractor needs to provide documentation from the suppliers to justify the cost of the materials.
6. Previous Use or Testing. A description of any previous use or testing of the VECP on another City contract or elsewhere, the conditions and results therewith. The Contractor shall submit the technical aspects of the VECP in sufficient detail so the Engineer can determine the suitability of the VECP from an engineering perspective. If the technology is new, test information shall be provided to the Engineer's satisfaction. If a similar VECP was previously submitted on another City contract, indicate the date, contract number, and the action taken by the City.

C. Submittal of Formal VECP. Upon notification by the Engineer that the conceptual VECP is approved and a formal VECP is necessary, the Contractor will submit to the Engineer an original and three copies of the following materials and information for each formal VECP along with any additional information requested by the Engineer:

1. Formal VECP Summary. A summary of the VECP, identified as "Formal VECP", which follows the conceptual VECP summary format and information requirements (Information and estimates may have changed since the conceptual VECP).
2. Complete Plans and Specifications. Complete plans and specifications, which meet City standards, showing the proposed changes relative to the original contract features and requirements. The City requires a Professional Engineer's stamp and signature on any significant engineering changes.
3. Field Change Sheets. Field change sheets and/or shop drawings. If the VECP results in a field change, and those items affected require the submission of shop drawings, the shop drawings will not be accepted unless accompanied by corresponding field change sheets.
    1. Documents shall be developed in compliance with City requirements. The City requires a Professional Engineer's stamp and signature on any significant engineering changes.
4. Schedules. The same information requirements as for the conceptual VECP apply, except that a formal, proposed, revised progress schedule is required.
5. Cost Analysis. A complete cost analysis indicating quantity changes, unit price changes, and new contract pay items. As a minimum it shall include:
    a. An itemized comparison of estimated costs to complete all the contract work with implementing the VECP and without implementing the VECP.
    b. Proposed unit prices for any new contract pay items introduced by the VECP and appropriate documentation for review under the Agreed Price process.
    c. Proposed unit prices for any existing contract pay items for which agreed prices are sought due to a significant change in character of work (quantity or complexity). Appropriate documentation for review under the Agreed Price process is required.
    d. The cost of any items with long lead times (e.g., materials ordered) required after conceptual approval and before final approval shall be identified.

7. Differences. Full descriptions of the difference between the existing contract requirements and the proposed changes, and the comparative advantages and disadvantages of each, including considerations of service life, economy of operation, ease of maintenance, traffic flow, safety, desired appearance, progress schedule, and any increase/reduction of environmental impacts.
8. Technical Presentation. The Contractor may be required to conduct a technical presentation as part of the review process.
9. Cost Documentation. All formal VECP costs submitted shall be supported by documentation as required by Article 26 of the Standard Construction Contract.

The Engineer will not formally approve any VECP until all required VECP documentation has been submitted and is acceptable to the Engineer.

A formal VECP may be submitted concurrently with the conceptual VECP, however, the Contractor assumes any costs associated with the formal VECP at its own risk. Reimbursable costs will be considered only if the conceptual VECP is approved. Clearly identify whether a VECP is being submitted for conceptual approval, formal approval, or both.

Once a formal VECP has been approved, the VECP will then be submitted as a change order and processed accordingly. The Contractor is responsible for submitting all appropriate information to the Engineer in a timely manner.

D. Conditions. The Contractor shall not base any bid prices on the anticipated approval of a VECP and should recognize that any VECP may be rejected. The following terms and conditions apply to VECP:

1. A VECP will only be considered after the contract is awarded.
2. A VECP applies only to the contract for which it was submitted. One VECP shall not be submitted for multiple contracts. Approval or disapproval of a VECP on one contract does not guarantee approval or disapproval on another contract.
3. The VECP becomes the property of the City and will contain no restrictions imposed by the Contractor on its use or disclosure. The City will have the right to use, duplicate, and disclose in whole or in part any data necessary for the utilization of the VECP. The City retains the right to utilize any accepted or rejected VECP or part thereof on any other project without any obligation to the Contractor.
4. Approval of the conceptual VECP in no way obligates the Engineer to approve the formal VECP. The Contractor will have no claim against the City as a result of the rejection of any such conceptual or formal VECP except as otherwise provided in Sub-Provision E.4, below.
5. When the Engineer is in the process of making design and specification revisions and a Contractor submits a VECP with similar revisions, the Engineer will reject the VECP and proceed without any obligation to the Contractor.
6. A VECP will be considered only if reasonable, cost-effective options are not provided in the contract documents.
7. The Engineer will be the sole judge as to whether a VECP qualifies for consideration and evaluation. It may reject any VECP that requires excessive time or costs for design review, evaluation, and/or investigations. The Engineer will be the sole judge in determining if the proposed VECP will result in a sufficient amount of direct or indirect cost savings to offset the City's effort to review the VECP.

8. A VECP shall be consistent with DDC's design policies and basic design criteria, provide the same service life or more, facilitate economy of operations, ease of maintenance, and achieve the desired appearance and safety.
9. A VECP will not be allowed that changes the type and/or thickness of the pavement structure and material, or solely substitutes one material for another. Examples of materials that may fall into this inappropriate substitution situation are drainage pipes, coatings, pavement markings, etc. The simple elimination of work does not necessarily constitute a VECP, however, a VECP which introduces a simple material substitution, or elimination of work, may be considered if it is accompanied by a design change or change in the construction method. A simple material substitution which introduces a new material to the DDC may be also considered.
10. The VECP will not be experimental in nature, but will have been proven to the Engineer's satisfaction under similar or acceptable conditions on another City contract or at another location acceptable to the Engineer.
11. If the Engineer requires any additional information to evaluate the VECP, this information shall be provided in a timely manner. Unless otherwise mutually agreed upon, failure to do so will result in the rejection of the VECP. An incomplete or a poor quality VECP which hinders the Engineer's review may also result in the rejection of the VECP.
12. The Contractor shall encourage submissions of VECP from an approved subcontractor, provided that reimbursement is made by the City to the Contractor and that the terms of payment to the Subcontractor are satisfactorily negotiated and accepted before the VECP is submitted to the Engineer. Subcontractors may not submit a VECP except through the Contractor.
13. A VECP approved by the Engineer is considered to be a revision to the contract documents and progress schedule. Consequently, if unsatisfactory results are being achieved or adjustments are necessary during implementation of a VECP, the rejection of work, removal of work, addition of work, or revision of work shall be evaluated in accordance with the Contract requirements.
14. All contract pay items and quantities referenced in the VECP construction savings analysis shall be Engineer-approved contract provisions. Any extra work, inclusion of an omission of work, or other field changes shall be authorized prior to use in VECP savings calculations.
15. No work related to a VECP will be performed under allowance items. Agreed prices must be reached for any contract pay items related to the VECP before the VECP is approved. If the Contractor is deemed to have taken reasonable diligence in determining the work involved but if during the construction of VECP work a significant change in the character of work occurs, the Engineer may consider new agreed prices.
16. The Contractor will receive written notification from the Engineer when the VECP is approved. Material orders placed prior to VECP approval shall be submitted at the Contractor's risk.
17. Once a VECP has been approved, the VECP will then be submitted as a change order and processed accordingly. The Contractor is responsible for submitting all appropriate information to the Engineer in a timely manner.

E. Payment. If the VECP is accepted by the Engineer, the changes and payments will be authorized through a change order. Reimbursement to the Contractor will be made as follows:

1. A VECP introduces two individual payments, one for VECP construction savings, and one for VECP design cost. The contract pay item changes along with the VECP construction savings and design cost reimbursements to the Contractor should be submitted in one change order.

2. The City will pay to the Contractor 50% of the VECP construction savings. The VECP construction savings is the difference between the actual contract costs with the VECP implemented and a detailed estimate of what it would have cost to complete the contract work without implementing the VECP, based on final construction. If final construction savings differs from the amount estimated in the formal VECP, an adjustment may be made and included in another change order. The VECP construction savings reimbursement to the Contractor will not be paid until the VECP work has been completed (progress payments on the completed VECP work are allowed). The Engineer may withhold all or a portion of the payment for the Contractor's share of the VECP construction savings until the final contract accounting. In the event that at final contract accountings the implementation of VECP actually results in no construction savings, then the Contractor will receive no VECP construction savings payment.

   The Engineer is the sole judge in deciding the construction savings due to the implementation of the VECP. The Engineer will withhold VECP construction savings reimbursement until the Contractor supplies all required VECP documents.

3. If a design cost is submitted for a VECP, the City will pay to the Contractor a 50% share of the Contractor's reasonable cost for design incurred after conceptual VECP approval. If the design cost submitted for the Engineer’s approval is deemed unreasonable, only 50% of the design cost deemed to be reasonable will be reimbursed. Not every VECP will have a design cost associated with it. The Engineer is the sole judge in determining the reasonableness of the design cost. Reimbursable design costs are for engineering changes. Preparation and submission of the proposal (e.g., savings analysis, progress scheduling, etc.) are not considered design costs and are not reimbursable. Reimbursable VECP design may be performed by a consultant or directly by the Contractor. The Contractor shall not be charged for, nor can the Contractor claim, any VECP design performed by the City.

   The design cost shall be submitted as a lump sum item with supporting documentation. The supporting documentation shall include itemized direct salary costs (rates & hours), overhead (only for consultant design), and direct non-salary costs. Payment for direct salary costs and overhead will be limited to the current City reimbursement policies for Consultant Engineering agreements.

   For consultant design, reasonable overhead on the direct technical salaries will be reimbursed. For Contractor design, overhead is not reimbursable for direct salary costs.

   Overhead shall not be charged for direct non-salary costs whether incurred by the Contractor or by a consultant. Payment for direct non-salary costs will be made at actual cost paid. Although for certain direct non-salary costs (lodging, meals, mileage) the rates must meet the requirements of Comptroller’s Directive 6.

   The subtotal of direct salary costs, overhead, and direct non-salary costs shall be considered a "professional service fee" and reimbursed in accordance with §109-05B.3. Service Charges. A maximum 5% for the Contractor's contract supervision and overhead is allowed, in addition to any overhead submitted for consultant direct salary costs. All design costs are subject to audit.

   Additional supporting documentation (receipts, time sheets, etc.) shall be supplied in a timely manner if requested by the Engineer.

   In the case of a formal VECP being jointly submitted with the conceptual VECP, the City will pay to the Contractor a 50% share of the Contractor's reasonable cost for design specific to the development of the formal VECP (nothing toward the conceptual VECP) if the conceptual VECP is approved.

4. In the event of the Engineer's conceptual approval of a direct cost savings VECP, and the Contractor is directed to proceed with the VECP implementation steps and final approval is not reached, regardless of whether due to the actions of the City or the Contractor, 50% of the total reasonable design costs will still be reimbursed to the Contractor. If "advance" written approval was given to proceed with the work, procure materials, and begin fabrication; and rejection occurs, the work and fabrication costs will be reimbursed in accordance with the Standard Construction Contract. Only those materials not incorporated and unique to the contract (i.e., not restockable) will be evaluated for payment.
5. There will be no reimbursement for any costs incurred for the conceptual VECP or prior preparations.
6. If more than one VECP is approved for a contract, construction savings and design costs shall be tracked separately for each VECP.
7. When multiple submittals of information for a VECP are required to satisfy the information needs of the conceptual or formal VECP procedure, and contract timing will be negatively impacted before review and subsequent approval can be given by the Engineer, then the VECP may be rejected. In such cases, there will be no claim by the Contractor for design costs or loss of anticipated savings and/or profits.
8. VECP payments only involve direct savings or costs. Indirect savings or costs (time, user delay, contract delay, etc.) are not included in VECP payment calculations. The calculations of VECP payments are independent from the payments or penalties for contract time related issues.

   If a VECP revises the progress schedule, the contract milestones upon which time related provisions are based may be affected. Time savings resulting from a VECP may be realized in a time related contract provision. Conversely, if a VECP negatively affects a progress schedule, time related contract provisions may be negatively affected.

F. Time Savings. The Engineer will consider proposals that result in time savings and at the same time may increase the cost of the contract. The Engineer will be the sole judge as to whether the benefits of completing the contract or a phase before the scheduled completion date or milestone offsets any increase in cost. These submittals, while not constituting a Value Engineering Change Proposal, will be reviewed using the VECP approval process. In addition to information required in Sub-Provision B, “Submittal of Conceptual VECP” above and Sub-Provision C, “Submittal of Formal VECP” above, the Contractor shall provide the Engineer the anticipated amount of time to be saved and sufficient information to enable the Engineer to calculate and evaluate the cost benefit of the savings in user delay. Time savings generated by the VECP may be claimed under an existing time related contract provision. If the time savings VECP increases the cost of the contract, the additional cost shall not be subtracted from any time related contract provision payments.

G. Significant Changes. Once a VECP is approved, any future significant change is no longer based on the original contract bid conditions (quantity, nature or kind of a material involved), but rather on the conditions as adjusted by the VECP (adjusted quantities, anticipated site conditions and materials, etc.).

All significant changes shall be agreed upon prior to formal VECP approval. If after formal VECP approval, an unforeseen change in the VECP work causes a significant change in the character of work, quantities and prices may be adjusted and the VECP savings shall be adjusted accordingly.

B9. Reference Documents

The following reference documents are attached to the Contract:

(1) East Side Coastal Resiliency: Mitigation Work Plan for MGP-Related NAPL Contamination, prepared by AKRF under the Hazen and Sawyer / AKRF JV.
(2) East Side Coastal Resiliency: Remedial Action Plan (and associated CHASP), prepared by AKRF under the Hazen and Sawyer / AKRF JV.
(3) East Side Coastal Resiliency: Supplemental Subsurface Investigation Report - Borough of Manhattan, New York, prepared by AKRF under the Hazen and Sawyer / AKRF JV.
(4) East Side Coastal Resiliency: Environmental Subsurface Investigation Report for Parallel Conveyance & Isolation Gates - Borough of Manhattan, New York, AKRF-KSE JV.
(5) East Side Coastal Resiliency: Mitigation Work Plan for MGP-Related NAPL Contamination, prepared by AKRF under the Hazen and Sawyer / AKRF JV.
(6) East Side Coastal Resiliency: Supplemental Subsurface Investigation Report - Borough of Manhattan, New York, prepared by AKRF under the Hazen and Sawyer / AKRF JV.
(7) East Side Coastal Resiliency Project Area One: Subsurface Exploration Report - Borough of Manhattan, New York, prepared by AKRF under the Hazen and Sawyer / AKRF JV.
(8) East Side Coastal Resiliency Project Area Two: Subsurface Exploration Report - Borough of Manhattan, New York, prepared by AKRF under the Hazen and Sawyer / AKRF JV.
(9) Remedial Investigation Report, Operable Unit 2 (OU2) – Former East 21st Street Works – Site # V00536, New York, New York, AECOM.
(10) Remedial Investigation Report, Stuyvesant Town Former Manufactured Gas Plant Sites, VCA Index D2—0003-02-08, AECOM.
(11) Remedial Investigation Report for Operable Unit 2 – East 11th Street Works Site – NYSDEC Site No. V00534, New York, New York, ARCADIS.
(12) Storm Water Pollution Prevention Plan (SWPPP).
(13) Documents listed as Appendix A on Contract Drawing G018.
(14) As-Builts: “PLANS FOR IMPROVING PORTIONS OF THE FRANKLIN D ROOSEVELT AND PORTIONS OF THE HARLEM RIVER DRIVE”
(15) ASBESTOS AND LEAD PAINT SURVEY REPORT FOR EAST SIDE COASTAL RESILIENCY

The referenced documents are available from the NYCDDC BDO website.

B10. Envision

The DDC is committed to the principles of sustainable development and will submit this project for evaluation as per the Institute for Sustainable Infrastructure's ENVISION Sustainable Infrastructure Framework. As such, the Contractor is required to provide support and assistance to DDC in the required documentation for applicable contractor related activities for the ENVISION verification process. DDC will be responsible for the Envision submittal process, including any fees or required Sustainability professionals.

The ENVISION: Sustainable Infrastructure Framework Guidance Manual is available at: https://sustainableinfrastructure.org.

B11. Payment for Maintenance and Protection of Traffic

This contract has Maintenance and Protection of Traffic (MPT) payments on a Lump Sum basis, paid under Item 6.70. MPT includes all elements necessary to establish a work zone, provide traffic control and manage the flow and safety of traveling public to provide accessibility and safety for construction personnel and equipment, and to ensure safety and convenience of abutting residents and surrounding properties. Item 6.70 includes providing MPT to all users regardless of mode of transportation (including without limitation pedestrians, cyclists, and motorists), and throughout the entire project area (including without limitation park areas, highways, sidewalks, and streets). All MPT work must conform to the standards indicated on the contract plans, specifications and as directed by the Engineer.

The Contractor is reminded of the requirements of Section 6.70.13 of the Standard Highway Specifications, and that all required MPT components are included in the Lump Sum price unless they are paid separately. This explicitly includes flaggers, crossing guards, and uniformed flagpersons in the Lump Sum price, all of which are subject to the Davis-Bacon Wage rates found in the HUD-Pages.

B12. Special Inspection and Department of Buildings.

Portions of work under this contract are subject to the provisions of the New York City Construction Codes, as noted on the Contract Drawings.

Work subject to the provisions of the New York City Construction Codes shall meet the requirements of the New York City Construction Codes and the following:

1. Inspection of selected materials, equipment, installation, fabrication, erection or placement of components and connections made during the progress of the Work to ensure compliance with the Contract Documents and provisions of the New York City Construction Codes, shall be made by a Special Inspector. The City of New York will retain the services of the Special Inspector and bear the costs for the performance of Special Inspections in compliance with NYC Construction Codes requirements or as additionally may be called for in the project specifications. The Special Inspector shall be an entity compliant with the requirements of the New York City Construction Codes.

2. The contractor shall be responsible for, and bear all costs associated with the filing and securing of approvals, if any, as required in the specifications.

   This work may include but is not limited to:

   a. Engaging the services of a New York City licensed Concrete Testing Lab for the review and approval of concrete design mix, testing, signatures and professional seals, etc., compliant with NYC Department of Buildings requirements, for each concrete design mix.

   b. Engaging a professional engineer or registered architect to act as the applicant, and prepare or supervise the preparation of all construction documents and specifications submitted under the required applications.

   Where a Form TR3 is required, concrete mix design approval by the QA & Construction Safety Bureau per Section 3.05.4 of the NYCDOT Standard Highway Specifications is not required.

3. The Contractor shall notify the relevant Special Inspector in writing at least 72 hours before the commencement of any work requiring Special Inspection. The contractor shall be responsible for, and bear related costs to assure that all construction or work shall remain accessible and exposed for inspection purposes until the required inspection is completed.

4. Inspections and tests performed under “Special Inspection” shall not relieve the Contractor of the responsibility to comply with the Contract Documents, and that there is no warranty given to the Contractor by the City of New York in connection with such inspection and tests or certifications made under “Special Inspections”.

5. The contractor must coordinate with the Engineer to provide access and schedule the work for inspection by the Special Inspector.

B13. Coordination with Other Contractors

The East Side Costal Resiliency Project is being executed by multiple simultaneous construction contracts, including this contract. Accordingly, the Contractor is required to coordinate with the Other Contractors as specified in Article 12 of the Standard Construction Contract.

B14. Revisions: Specifications and Contract Drawings

The Specifications and the Contract Drawings for the Project are revised in accordance with the provisions set forth below.

(1) Owner: Wherever the term “Owner” is used in the Specifications and/or the Contract Drawings, such term shall mean the City of New York.

(2) Other Entities: In the event any entity other than the City of New York is referred to or named as the “Owner” in the Specifications and/or the Contract Drawings, the name of such other entity is deemed deleted and replaced with the “City of New York”.

(3) Architect: Wherever the words “Department’s Authorized Representative”, “Construction Manager”, “Landscape Architect”, “Project Manager”, “Architect”, “Architect / Engineer”, “Architect and/or Engineer”, or similar are used in the Specifications and/or the Contract Drawings, such words are deemed deleted and replaced with the word “Engineer”.

(4) Products / Manufacturers: Wherever the Specifications and/or the Contract Drawings require the contractor to provide a particular product (i.e., material and/or equipment) from a designated manufacturer and/or vendor, the term “or approved equal” is deemed inserted, even if only one product and/or manufacturer is specified, except as otherwise provided below.

(5) Special Experience Requirements: Special Experience Requirements for the Project, if any, are set forth in the Bid Booklet. Special Experience Requirements may apply to contractors, subcontractors, installers, manufacturers and/or suppliers. If the Specifications and/or the Contract Drawings contain any Special Experience Requirement that is not set forth in the Bid Booklet, such Special Experience Requirement is deemed deleted, except as otherwise provided below.

(a) Any Special Experience Requirement that provides that the entity performing the work or supplying the material must have more than three (3) years of experience, is revised to provide that the entity performing the work or supplying the material must have three (3) years of experience, except as described in paragraph (b) below.

(b) Any Special Experience Requirement that pertains to the abatement of hazardous materials shall not be subject to the deletion and/or revision set forth above. Such Special Experience Requirement shall remain in full force and effect.

(c) Any Special Experience Requirement that provides that the entity performing the work must be licensed, authorized, certified, approved by or acceptable to the manufacturer, is deemed deleted and replaced with the requirement that such entity must be properly trained for the specified work.

(d) Any Special Experience Requirement that provides that the individual workers performing the work must be licensed, authorized, certified, approved by or acceptable to the manufacturer, is deemed deleted and replaced with the requirement that such individual workers must be properly trained for the specified work.

(6) Contractor Retained Engineer: If the Specifications and/or the Contract Drawings require the Contractor to retain an Engineer to provide engineering services for the Project, the following sentence is deemed inserted: “Such Engineer must be a Professional Engineer, licensed in the State of New York.”

(7) Sustainability Provisions: If the Specifications and/or the Contract Drawings require the Contractor to purchase FSC certified wood, rapidly renewable materials, materials within 500 miles, metal materials, products, anchors, framing and accessories with recycled content, such provisions are deemed deleted and replaced with the requirement that if the contractor has

purchased FSC certified wood, rapidly renewable materials, materials within 500 miles, metal materials, products, anchors, framing and accessories with recycled content, the contractor shall submit such forms or documentation as may be required by the City in order for the USGBC to certify that the Project qualifies for the related LEED credit(s).

(8) Exculpatory Provisions: In the event the Specifications and/or the Contract Drawings contain any provision whereby the consultant and/or any of its officers, employees or agents, including subconsultants, is absolved of responsibility for any act or omission, such provision is deemed deleted.

(9) Insurance: Provisions regarding insurance coverage the Contractor is required to provide are set forth in Article 22 of the City of New York Standard Construction Contract and Schedule A, which is included in the Addendum to the General Conditions. In the event the Specifications and/or the Contract Drawings contain any provision regarding insurance requirements, such provision is deemed deleted.

(10) Indemnification: Provisions regarding indemnification are set forth in Articles 7, 12, 22 and 57 of the City of New York Standard Construction Contract. In the event the Specifications and/or the Contract Drawings contain any provision regarding indemnification, such provision is deemed deleted.

(11) Dispute Resolution: Provisions regarding dispute resolution are set forth in Article 27 of the City of New York Standard Construction Contract. In the event the Specifications and/or the Contract Drawings contain any provision regarding dispute resolution, such provision is deemed deleted.

(12) Standard Construction Contract: In the event of any conflict or inconsistency between (1) the Specifications and/or the Contract Drawings and (2) the City of New York Standard Construction Contract, the City of New York Standard Construction Contract shall prevail.

(13) Prices to Cover: All contract unit prices will include the costs of all labor, material, equipment, insurance, supervision, and insurance, whether or not specifically mentioned in the specifications.

(14) Work to be Managed solely by the NYC Department of Design and Construction (NYCDDC): In the event a provision stipulates that approval or direction will be provided by a City Agency other than the NYCDDC, that provision will be interpreted that the approval or direction will be provided by the Engineer, in consultation with the referenced Agency. This stipulation does not apply to approvals or direction that are required by Rules, Codes or other regulations; e.g. the NYC Department of Buildings will continue to enforce the NYC Building Codes and approve building permit applications.

(15) Guarantee Periods: If a Guarantee period is specified that exceeds the guarantee period listed in Schedule A, the guarantee period in Schedule A governs.

(16) Compliance with laws and regulations: all references to compliance with laws and regulations are deemed to include compliance with all local, state, and federal regulations.

(17) References:

(a) References to the General Conditions in the specifications will refer to the NYCDOT Standard Highway Specifications, Division 1 (Section 1.06), the NYCDEP Standard Sewer and Water Specifications Division 1 (Sections 10.01 through 12.07), and the Standard Construction Contract, as supplemented by the specifications in this Volume 3.

(b) References to the Materials and Methods of Construction will refer to the appropriate requirements of the NYCDOT Standard Highway Specifications, Division 2 (Sections 2.01 through 20.40) and the NYCDEP Standard Sewer and Water Specifications Division 2 (Sections 20.01 through 26.02) as supplemented by the specifications in this Volume 3.

B15. U.S. Army Corps of Engineers Requirements

The City has applied for a U.S. Army Corps of Engineers (USACE) Permit. The following USACE special conditions must be followed:

(A) This authorization is conditional on the applicant's receipt of the required Section 401 Water Quality Certification or waiver from the New York State Department of Environmental Quality (NYSDEC). No work may be accomplished until the required approval from NYSDEC has been obtained. Once obtained, the permittee, and their agents, shall be responsible for complying with any special conditions and/or stipulations incorporated into the appropriate Section 401 Water Quality Certification, and all amendments thereto.

(B) This authorization is conditional on the applicant's receipt of the required coastal zone management concurrence or waiver from the New York State Department of State (NYSDOS). No work may be accomplished until the required approval from NYSDOS has been obtained. Once obtained, the permittee, and their agents, shall be responsible for complying with any special conditions and/or stipulations incorporated into the appropriate Section 307(c) of the Coastal Management Act of 1972 Authorization from the NYSDOS, and all amendments thereto.

(C) The permittee, and their agents, shall avoid installing cofferdams within winter flounder early life stage Essential Fish Habitat between January 15 and May 31 of any year to minimize impacts to winter flounder eggs and larvae.

(D) The permittee, and their agents, shall ensure when pile driving activities occur during a time of year when ESA-listed species may be present, a vibratory hammer shall be used to the extent practicable. If an impact hammer is used, 20-minute "soft starts" shall be performed, and a wooden block shall be used to buffer the noise and vibrations during hammering.

(E) The permittee, and their agents, shall ensure cofferdams, turbidity curtains, or other methods to control turbidity are utilized when operationally feasible and ESA-listed species may be present.

(F) The permittee, and their agents, shall ensure the Section 106 Programmatic Agreement dated December 5, 2019, is adhered to.

(G) The permittee shall provide this office with a copy of all documents and correspondence required to carry out the Section 106 Programmatic Agreement dated December 5, 2019, also including the Phase 1B Archeological Report, once completed.

(H) The permittee, and their agents, shall ensure any vessels used in conjunction with this project comply with the Port of New York anchorage ground regulations codified at 33 CFR 110.155, including paragraph (1)(11) regarding vessels that impede or obstruct vessel movements.

(I) The Permittee, and their agents shall, a minimum of 14-days prior to starting operations, submit the following information to the First Coast Guard District for publication in the Local Notice to Mariners by email at LNM@uscg.mil, or faxed to (617) 223-8291):

Date of submission; Name, phone number, and email address of project point of contact; Company Name; Type of Work; Waterway and location where work will be done; Latitude & Longitude of work area (Degrees, Minutes, Thousandths of seconds); Work Start & Stop dates and Hours of Operation; Equipment on scene; Passing Arrangements / Time to move vessels to not impede

navigation; VHF Radio Channel monitored; Disposal Site (if used); NOAA Chart Number for the area.

(J) The Permittee, and their agents, shall check in with Coast Guard Sector New York Vessel Traffic Service (VTSNY) on VHF CH 12 or at (718) 354-4195 each day, fifteen minutes before starting, and upon completion, of diving operations.

(K) The permittee, and their agents, shall email Jeffrey.M.Yunker@uscg.mil each request to moor two or more barges abreast or moor any single barge perpendicular to the federal channel at any time during the project for review with VTSNY. Construction barges may be required to move with advance notice depending on the location and combined beam of the moored vessels.

(L) The permittee, and their agents, shall email Jeffrey.M.Yunker@uscg.mil the as-built coordinates for the center of each of the ten relocated sewer outfalls.

(M) The permittee, and their agents, shall notify the National Oceanic and Atmospheric Administration of the project completion and specifications so they may initiate the appropriate chart and Coast Pilot corrections. This notification must be submitted online at https://nauticalcharts.noaa.gov/charts/docs/charts-updates/Permit-Public-Notice.pdf and include a copy of the USACE permit.

(N) The permittee, and their agents, shall ensure any current, or future, outdoor lighting is located or shielded so that it is not confused with any aids to navigation and does not interfere with navigation on the adjacent waterway. If installed, the lights must be white and non-flashing.

(O) The permittee shall ensure all soil and sediment management during in-water construction adheres to a Mitigation Work Plan (MWP) approved by the New York Stated Department of Environmental Conservation (NYSDEC), and/or shall complete any sediment testing requirements, as required by the NYSDEC, prior to the start of any in-water work within the project area. A copy of any changes to the MWP, and any reports resulting from additional soil testing, shall be provided to the U.S. Army Corps of Engineers, Regulatory Branch.

(P) The permittee, and their agents, shall conduct all in-water work within the confines of a turbidity curtain and oil booms to contain soil and suspended sediments. Additionally, the permittee shall use other Best Management Practices to ensure turbidity is minimized in the water.

(Q) The permittee understands and agrees that, if future operations by the United States require the removal, relocation, or other alteration, of the structure or work herein authorized, or if, in the opinion of the Secretary of the Army or his authorized representative, said structure or work shall cause unreasonable obstruction to the free navigation of the navigable waters, the permittee will be required, upon due notice from the Corps of Engineers, to remove, relocate, or alter the structural work or obstructions caused thereby, without expense to the United States. No claim shall be made against the United States on account of any such removal or alteration.

(R) The permittee shall utilize best management practices to minimize turbidity during all in-water work activities as well as prevent construction materials, including debris, from entering any waterway to become drift or pollution hazards.

B16. Omitted Work

Article 29.5 of the Standard Construction Contract is amended as follows:

29.5 The **Contractor** agrees to make no claim for damages or for loss of overhead and profit with regard to any omitted **Work**, except as follows:

For **Qualifying Omitted Work**, defined below, the **Contractor** may make a claim for documented, project specific overhead expenses actually incurred on **Qualifying Omitted Work**. Such overhead does not include delay damages of any kind, home office overhead, general overhead, or profit, or any other expense other than those described in paragraph 29.4, above. The **Engineer** will review the **Contractor's** submissions and determine the amounts payable to the **Contractor**, if any. Disputes arising hereunder are exclusively within the jurisdiction of Article 27.

For the purposes of this Article 29.5 **qualifying Omitted Work** is defined as follows:

- An omission exceeding 2% of the total contract bid price. The omission may be a single bid item or a collection of multiple bid items of related **Work** (related directly to the **Qualifying Omitted Work**) as determined by the **Commissioner**;
- Underruns of unit price items not related to **Work** expressly omitted by the **Commissioner** in accordance with Article 29 will not be considered **Qualifying Omitted Work**.

B17. Consequential Loss

(a) Subject to sub-section (b), below, and the rights provided to the City under Article 7 (*Protection of Work and Persons and Property; Notices and Indemnification*), neither party will have the right to claim damages, including punitive and incidental damages, against the other party for breach of this Contract, in tort or on any other basis whatsoever, to the extent that any losses claimed by either Party are for loss of profits, loss of use, loss of production, loss of business, loss of business opportunity or any claim for consequential loss or for indirect loss of any nature but excluding any of the same that relate to payments or damages expressly provided for under this Contract.

(b) The limitation in sub-section (a), above, will not apply to or limit the City's right to recover from the Contractor:

(i) any losses to the extent that they are covered by the proceeds of insurance (or self-insurance) actually maintained by the Contractor or required to be maintained by the Contractor under Article 22 (*Insurance*);

(ii) losses arising out of fraud, criminal conduct, intentional misconduct, recklessness, bad faith or gross negligence on the part of the Contractor or any Subcontractor;

(iii) liquidated damages payable by the Contractor under this Contract;

(iv) amounts payable by the Contractor under any indemnity in this Contract in respect of third party claims; and

(v) losses arising out of any release or threatened release of hazardous materials (i) which was brought onto the Site by the Contractor or any Subcontractor, or (ii) which was negligently removed or handled by the Contractor or Subcontractors, regardless of the source origin or method of deposit of such hazardous materials.

B18. Information from Previous Advertisement.

This contract was previously advertised, but bids were not opened. The previous advertisement contained 18 addenda, and these Contract Documents include the addenda revisions in their final form, except as noted below.

(a) Changes in this Advertisement: As a guide to the bidders, the following changes were made to the Contract Documents from the previously advertised documents:

Volume 1:

1. Contract date on cover page
2. New Notice to Bidders 4
3. Updated PIN and ePIN numbers
4. Updated Attachment 1
5. Special Experience Requirements for the Bidder
6. Schedule B: M/WBE Goal revised
7. Bid Schedule: Remove items:
    a. ESCR-7.13 PK1
    b. ESCR-7.13 PK2
    c. ESCR-7.13 PK3
    d. ESCR-7.13 SI

Volume 2:

1. Contract date on cover page

Volume 3:

1. Contract date on cover page
2. Table of Contents: Update JB-Pages numbers
3. GENERAL-Pages: Remove Section ESCR-7.13 PK
4. S-Pages, Article B-7, Work Restrictions: Remove line 1 (“No area of East River Park can be closed before September 7, 2020”)
5. S-Pages, Article B-15, U.S. Army Corps of Engineers Requirements: New attached permit
6. S-Pages, Article B-18, Information from Previous Advertisement: New Article
7. JB-Pages: Addition of ConEd document “CONST-029 Revision Number 4” starting on page JB-12.

Please note that the above list is just a guide, and the actual text of the Contract Documents governs.

(b) Previously answered Pre-Bid Questions (PBQ): Additionally, the PBQ that were received and answered are attached to these S-Pages. PBQs that were solely related to the previous procurement (such as postponement requests) have been redacted to avoid confusion. Please note that many discrepancies identified by PBQ were corrected in subsequent addenda and these revisions are already reflected in the Contract Documents.

For clarity, the PBQ attached are part of the Contract Documents, and are not PBQ as part of this procurement.

Attached are 150 pages of PBQs and the supplemental attachments that were originally provided with the PBQs when they were issued.

OCMC TRAFFIC STIPULATIONS

February 13, 2020

OCMC FILE NO: MEC-19-181
CONTRACT NO:
PROJECT: EAST SIDE COASTAL RESILIENCY PROJECT (PROJECT AREA TWO (1)

LOCATION(S): VARIOUS LOCATIONS

PERMISSION IS HEREBY GRANTED TO THE DEPARTMENT OF DESIGN AND CONSTRUCTION ITS DULY AUTHORIZED AGENT, TO ENTER UPON AND RESTRICT THE FLOW OF TRAFFIC AT THE ABOVE LOCATION(S) FOR THE PURPOSE OF CARRYING OUT THE ABOVE NOTED PROJECT, SUBJECT TO THE STIPULATIONS, AS NOTED BELOW:

I. SPECIAL STIPULATIONS

A. **EMBARGOES** – A CONSTRUCTION EMBARGO WILL APPLY TO THOSE LOCATIONS BELOW WHICH FALL WITHIN THE **HOLIDAY EMBARGO** OR ANY OTHER SPECIAL EVENT EMBARGOES SUCH AS PUBLISHED BY THE BUREAU OF PERMIT MANAGEMENT AND CONSTRUCTION CONTROL.

1. **BIKE LANES** FOR ANY WORK IN OR AFFECTING A BIKE LANE , THE PERMITTEE MUST COMPLY WITH THE "**NEW GUILDELINES FOR THE MANITENANCE & PROTECTION OF TRAFFIC PLAN FOR CYCLING**", AND ALSO POST A SIGN AT THE WORK ZONE STATING "**CONSTRUCTION IN BIKE LANE PROCEED WITH CAUTION**". WHICH ARE AVAILABLE AT:

HTTPS://WWW1.NYC.GOV/HTML/DOT/DOWNLOADS/PDF/BIKE-MPT-GUIDELINES.PDF

B. **BIKE SHARE STATIONS**: THE PERMITTEE SHALL NOT REMOVE, RELOCATE, DAMAGE OR DISRUPT THE OPERATION OF EXISTING BIKE SHARE STATIONS WITHOUT FIRST CONTACTING NYC BIKE SHARE AT 855-245-3311 FOR THEIR REQUIREMENTS PRIOR TO COMMENCING WORK.

C. **CITYBENCH**: THE PERMITTEE SHALL NOT REMOVE, RELOCATE, DAMAGE OR DISRUPT AN EXISTING CITYBENCH WITHOUT FIRST CONTACTING NYC DOT AT 212-839-6569, OR VIA EMAIL AT CITYBENCH@DOT.NYC.GOV PRIOR TO COMMENCING WORK.

D. **PROTECTION OF NYC DEP GREEN INFRASTRUCTURE**: THE PERMITTEE SHALL TAKE PRECAUTION OF NYC DEP GREEN INFRASTRUCTURE IN THE RIGHT-OF-WAY. THE PERMITTEE MUST PROTECT NYC DEP GREEN INFRASTRUCTURE DOWNSTREAM OF THE WORK OR WITHIN FIVE (5) FEET OF THE WORK AREA. THE PERMITTEE MUST EMAIL NYC DEP AT SUSTAINABILITY@DEP.NYC.GOV FOR PROTECTION REQUIREMENTS PRIOR TO COMMENCING WORK. THE PERMITTEE IS RESPONSIBLE FOR RESTORATION OF DAMAGED NYC DEP INFRASTRUCTURE AS DIRECTED BY NYC DEP.

E. **BUS STOPS** – THE PERMITTEE SHALL PROVIDE WRITTEN NOTICE TO NYC DOT OCMC AND NEW YORK CITY TRANSIT (NYCT) A MINIMUM OF FIVE (5) WEEKS IN ADVANCE FOR LANE/STREET CLOSURES THAT AFFECT BUS ROUTES/BUS STOPS.

F. **STREET LIGHTS / TRAFFIC SIGNALS**: THE PERMITTEE SHALL NOT REMOVE OR RELOCATE EXISTING STREET LIGHTS OR TRAFFIC SIGNALS WITHOUT FIRST OBTAINING APPROVAL FROM NYCDOT STREET LIGHTING / TRAFFIC SIGNALS UNIT.

G. **TRAFFIC CAMERAS, DETECTION/COMMUNICATION EQUIPMENT**: IF AT ANY TIME DURING THE APPROVED WORK, THE PERMITTEE ENCOUNTERS TRAFFIC SURVEILLANCE CAMERAS, DETECTION EQUIPMENT OR ANY TYPE OF COMMUNICATION EQUIPMENT (WIRELESS OR HARD-WIRED) ON ANY NYC DOT FACILITY, THAT IS NOT INCLUDED ON THE DESIGN/BUILD DRAWINGS, THE PERMITTEE SHALL IMMEDIATELY NOTIFY NYC DOT TRAFFIC MANAGEMENT BY PHONE AT 718-433-3390 OR 718-433-3340 AND VIA EMAIL AT TMC@DOT.NYC.GOV AND AWAIT DIRECTION PRIOR TO CONTINUING WORK.

H. **METERS** – THE PERMITTEE SHALL NOT REMOVE OR RELOCATE PARKING METERS WITHOUT FIRST OBTAINING APPROVAL FROM NYCDOT PARKING METER DIVISION AT 718 – 894 – 8651.

I. **TEST PITS** – THE BELOW TRAFFIC STIPULATIONS DO NOT APPLY TO TEST PIT WORK RELATED TO THIS CONTRACT. WORK HOURS AND OTHER REQUIREMENTS FOR TEST PIT OPERATIONS MAY DIFFER FROM THE STIPULATIONS IDENTIFIED BELOW. THE PERMITTEE SHALL BE REQUIRED TO OBTAIN SEPARATE PERMITS RELATED TO TEST PITS.

J. **TEMPORARY PARKING REGULATIONS/PAVEMENT MARKINGS** – THE PERMITTEE IS REQUIRED TO INSTALL, MAINTAIN AND REMOVE ALL NECESSARY TEMPORARY PARKING AND REGULATORY SIGNS AND PAVEMENT MARKINGS, AND RESTORE THEIR ORIGINAL CONDITION PER NYC DOT STANDARDS, PRIOR TO EXPIRATION OF THEIR PERMITS. THE PERMITTEE OR AGENCY PERFORMING PUBLIC OUTREACH SHALL POST AND MAINTAIN ADVISORY SIGNS A MINIMUM OF 48 HOURS PRIOR TO CHANGING EXISTING PARKING REGULATION SIGNS TO APPROVED TEMPORARY CONSTRUCTION PARKING REGULATION SIGNS. THE ADVISORY SIGNS SHOULD BE POSTED ON ALL POLES AND DRIVE RAILS ON THE SEGMENT AFFECTED, INDICATING THE DATE OF THE CHANGE, THE NEW REGULATIONS AND A TELEPHONE NUMBER TO OBTAIN MORE INFORMATION.

K. **ACCESS TO ABUTTING PROPERTIES** – THE PERMITTEE SHALL COORDINATE ALL ACTIVITIES WITH ABUTTING PROPERTY OWNERS TO ENSURE ACCESS IS PROVIDED TO/FROM ENTRANCES/DRIVEWAYS AT ALL TIMES.

L. **AUTHORIZED PARKING** – PRIOR TO PERFORMING WORK WHICH IMPACTS AUTHORIZED PARKING, THE PERMITTEE SHALL SUBMIT IN WRITING, AND COPY OCMC-STREETS, A REQUEST TO OCCUPY SPACE CURRENTLY USED BY AUTHORIZED VEHICLES. APPROVAL MUST BE RECEIVED FROM AUTHORIZED PARKING PRIOR TO OCCUPYING THESE AREAS.

NYC Department of Transportation
Bureau of Permit Management and Construction Control
55 Water Street - 7th Floor, New York, NY 10041
T: 212.839.9621 F: 212.839.8970
www.nyc.gov/dot

M. **NOTIFICATION** – THE PERMITTEE MUST AT LEAST TWO (2) WORKING DAYS BEFORE THE START OF CONSTRUCTION NOTIFY THE NYC FIRE DEPARTMENT, NYC POLICE DEPARTMENT, NYCEMS, LOCAL COMMUNITY BOARD, BOROUGH PRESIDENT'S OFFICE-CHIEF ENGINEER, NYCDOT OCMC OFFICE, AND ALL ABUTTING PROPERTY OWNERS.

N. **CONSTRUCTION INFORMATIONAL SIGNS** – THIS PROJECT REQUIRES A CONSTRUCTION PROJECT INFORMATIONAL SIGN (CPIS) IN ACCORDANCE WITH NYCDOT HIGHWAY RULE SECTION 2-02 (4) AND (5). CRITERIA AND A PROTOTYPE FOR THIS SIGN MAY BE FOUND ON THE NYCDOT WEBSITE AT:

HTTP://WWW.NYC.GOV/HTML/DOT/DOWNLOADS/PDF/DOT_CPIS_DIRECTIONS.PDF

O. **ENHANCED MITIGATIONS**

- **VARIABLE MESSAGE SIGNS (VMS)** SHALL BE PROVIDED FOR THIS PROJECT. **A TOTAL OF 8 VMS SHALL BE PLACED FOR THIS CONTRACT.** THE LOCATIONS AND MESSAGES SHALL BE RECOMMENDED BY NYCDDC AND THEIR CONTRACTOR A MINIMUM OF TWO (2) WEEKS PRIOR TO WORK COMMENCING, FOR OCMC REVIEW AND APPROVAL.
- **"NO STANDING ANYTIME-TEMPORARY CONSTRUCTION" SIGNS** AND TEMPORARY PAVEMENT MARKINGS SHALL BE INSTALLED AND MAINTAINED AS WARRANTED BY THE MAINTENANCE AND PROTECTION OF TRAFFIC (MPT) REQUIRED TO FACILITATE TRAFFIC MOVEMENTS THROUGH THE WORK ZONE. ALL TEMPORARY SIGNS AND PAVEMENT MARKINGS SHALL BE REMOVED UPON COMPLETION OF THE PROJECT.
- **COMMUNITY OUTREACH** SHALL BE PROVIDED FOR THE DURATION OF THE PROJECT.

II. MAINTENANCE AND PROTECTION OF TRAFFIC

A. WHEN WORKING ON MONTGOMERY STREET BETWEEN WATER STREET AND SOUTH STREET

1. Work hours shall be as follows: 9am-2pm Monday thru Friday and Saturday 8am-4pm
2. **Maintain two (2) lanes for traffic, one (1) lane in each direction.**
3. **Must maintain minimum five (5) clear sidewalk at all time.**
4. **Must coordinate with Public School on the block before mobilizing.**

B. WHEN WORKING ON MONTGOMERY STREET BETWEEN SOUTH STREET AND NORTH BOUND ENTRANCE RAMP

1. Work hours shall be as follows: 9am-2pm Monday thru Friday and Saturday 8am-4pm.
2. **Maintain two (2) lanes for traffic, one (1) lane in each direction..**
3. **Maintain minimum five (5) foot clear sidewalk at all time.**
4. **Must coordinate with Public School on the block before mobilizing.**

C. WHEN WORKING ON SOUTH STREET BETWEEN MONTGOMERY STREET AND GOUVERNEUR SLIP

1. Work hours shall be as follows: 9AM-2M Monday thru Friday and Saturday 8am-4pm
2. **Maintain one (1) eleven (11) lane for traffic at all time.**
3. **Maintain minimum five (5) foot clear sidewalk at all time.**
4. **Must coordinate with Public School on the block before mobilizing.**

D. WHEN WORKING IN THE INTERSECTION ON SOUTH STREET AND MONTGOMERY STREET

1. Work hours shall be as follows: 9am-2pm Monday thru Friday and Saturday 8am-4pm.
2. **Maintain two (2) lanes for traffic, one (1) lane in each direction on both roadway.**
3. **Full width of roadway shall be opened to traffic when site is unattended.**

E. WHEN WORKING ON FDR DRIVE SERVICE ROAD BETWEEN EAST 10TH STREET AND EAST 6TH STREET

1. Work hours shall be as follows: 9am-5pm Monday thru Friday and Saturday 8am-4pm
2. **Maintain one (1) eleven (11) lane for traffic at all time**
3. **Maintain minimum five (5) foot clear sidewalk at all time.**
4. **Must coordinate with NYCHA before mobilizing**

F. WHEN WORKING ON EAST 10TH STREET BETWEEN AVENUE D AND ROUNDABOUT

1. Work hours shall be as follows: 9am-5pm Monday thru Friday and Saturday 8am-4pm
2. **Maintain one (1) eleven (11) lane for 2-way thru traffic with flaggers at each end of the work zone.**
3. **Maintain minimum five (5) foot clear sidewalk at all time.**
4. **Must coordinate with NYCHA and NYCTA Buses before mobilizing.**

G. WHEN WORKING ON EAST 10TH STREET BETWEEN ROUNDABOUT AND FDR DRIVE SERVICE ROAD

1. Work hours shall be as follows: 9am-5pm Monday thru Friday and Saturday 8am-4pm
2. **Maintain one (1) eleven (11) lane for 2-way thru traffic with flaggers at each end of the work zone.**
3. **Maintain minimum five (5) foot clear sidewalk at all time.**
4. **Must coordinate with NYCHA and NYCTA Buses before mobilizing.**

H. WHEN WORKING ON EAST 10TH STREET PEDESTRIAN BRIDGE WEST APPROACH

1. Work hours shall be as follows: 9am-5pm Monday thru Friday and Saturday 8am-4pm
2. **Full sidewalk closure Full sidewalk closure (during working directing pedestrians to opposite sidewalk and after working hours full width of sidewalk shall be opened.**
3. **Full roadway closure only during bridge removal and when installing new pedestrian bridge.**
4. **Contractor is required to send written notice to Police, Fire, Community Board, affected NYC Transit or private bus companies and property owners on the segment of the street in which the permit applies a minimum of seven (7) days prior to full roadway closure. A copy of this notification must be presented to NYCDOT-OCMC office with necessary permit application.**

I. WHEN WORKING ON WATER STREET BETWEEN GOUVERNEUR SLIP AND JACKSON STREET

1. Work hours shall be as follows: 9am-5pm Monday thru Friday and Saturday 8am-4pm
2. **Maintain one (1) eleven (11) lane for traffic at all time.**
3. **Maintain minimum five (5) foot clear sidewalk at all time.**
4. **Must coordinate with NYCHA before mobilizing.**

J. WHEN WORKING ON GOUVERNEUR SLIP EAST BETWEEN WATER STREET AND SOUTH STREET

1. Work hours shall be as follows: 9am-5pm Monday thru Friday and Saturday 8am-4pm
2. **Full roadway closure for installation of water main relocation and sewer relocation**
3. **Full sidewalk closure (during working directing pedestrians to opposite sidewalk and after working hours full width of sidewalk shall be opened.**
4. **Contractor is required to send written notice to Police, Fire, Community Board, affected NYC Transit or private bus companies and property owners on the segment of the street in which the permit applies a minimum of seven (7) days prior to full roadway closure. A copy of this notification must be presented to NYCDOT-OCMC office with necessary permit application**
5. **Full width of the roadway and sidewalk shall be opened when site is unattended**

K. WHEN WORKING ON JACKSON STREET BETWEEN WATER STREET AND SOUTH STREET

1. Work hours shall be as follows: 9am-3pm Monday thru Friday and Saturday 8am-4pm
2. **Full roadway closure for water connection and diversion chamber construction**
3. **Maintain minimum five (5) foot clear sidewalk at all time.**
4. **Contractor is required to send written notice to Police, Fire, Community Board, affected NYC Transit or private bus companies and property owners on the segment of the street in which the permit applies a minimum of seven (7) days prior to full roadway closure. A copy of this notification must be presented to NYCDOT-OCMC office with necessary permit application**
5. **Must coordinate with Sacred Heart Convent before mobilizing.**

L. WHEN WORKING ON DELANCEY STREET SOUTH BETWEEN LEWIS STREET AND BARUCH DRIVE

1. Work hours shall be as follows: 9am-5pm Monday thru Friday and Saturday 8am-4pm
2. **Maintain one (1) eleven (11) lane for traffic at all time.**
3. **Maintain minimum five (5) foot clear sidewalk at all time.**
4. **Must coordinate with NYCHA before mobilizing.**

M. WHEN WORKING ON DELANCEY STREET NORTH BETWEEN MARGIN STREET AND FDR DRIVE SERVICE ROAD

1. Work hours shall be as follows: 9am-5pm Monday thru Friday and Saturday 8am-4pm
2. **Maintain one (1) eleven (11) lane for traffic at all time.**
3. **Full sidewalk closure for demolition of Delancey Street Pedestrian Bridge**
4. **Must coordinate with East River Housing Corporation before mobilizing.**

N. WHEN WORKING ON DELANCEY STREET BETWEEN BARUCH DRIVE AND FDR DRIVE SERVICE ROAD

1. Work hours shall be as follows: 9am-5pm Monday thru Friday and Saturday 8am-4pm
2. **Maintain one (1) eleven (11) lane and one left turning lane at all time.**
3. **Maintain minimum five (5) foot clear sidewalk at all time.**
4. **Must coordinate with East River Housing Corporation before mobilizing**

O. WHEN WORKING ON DELANCEY STREET BETWEEN LEWIS STREET AND FDR DRIVE SERVICE ROAD

1. Work hours shall be as follows: 9am-5pm Monday thru Friday and Saturday 8am-4pm
2. **Maintain one (1) eleven (11) lane and one left turning lane at the intersection of Margin Street**
3. **Maintain one (1) eleven (11) lane at all time at all other locations.**
4. **Maintain minimum five (5) foot clear sidewalk at all time.**
5. **Must coordinate with East River Housing Corporation before mobilizing**

P. WHEN WORKING ON AVENUE D/COLUMBIA STREET BETWEEN EAST HOUSTON STREET AND RIVINGTON STREET

1. Work hours shall be as follows: 8am-6pm Saturday and Sunday 9am-6pm only.
2. **Maintain two (2) lanes for traffic, one (1) lane in each direction.**
3. **Maintain minimum five (5) foot clear sidewalk at all time.**
4. **Must coordinate with NYCHA and NYCTA Buses before mobilizing.**
5. **Full width of roadway and sidewalk shall be opened to traffic and pedestrians when site is unattended.**
6. **School location.**

Q. WHEN WORKING ON EAST HOUSTON STREET BETWEEN AVENUE D/COLUMBIA STREET AND BARUCH DRIVE

1. Work hours shall be as follows: 9am-5pm Monday thru Friday and Saturday 8am-4pm
2. **Maintain two (2) lanes for traffic, no impact on the other side of East Houston Street at any time.**
3. **Maintain minimum five (5) foot clear sidewalk at all time.**
4. **Must coordinate with NYCHA and NYCTA Buses before mobilizing.**
5. **Full width of roadway and sidewalk shall be opened to traffic and pedestrians when site is unattended.**
6. **School location.**

R. WHEN WORKING ON EAST 10TH STREET BETWEEN AVENUE D AND ROUNDABOUT

1. Work hours shall be as follows: 9am-5pm Monday thru Friday and Saturday 8am-4pm
2. **Maintain one (1) eleven (11) lane for 2-way thru traffic with flaggers at each end of the work zone.**
3. **Maintain minimum five (5) foot clear sidewalk at all time.**
4. **Must coordinate with NYCHA and NYCTA Buses before mobilizing.**

II. GENERAL NOTES

A. **THIS IS NOT A PERMIT.** THIS STIPULATION SHEET MUST BE SUBMITTED WITH ALL REQUESTS FOR PERMITS PERTAINING TO THE ABOVE CONTRACT AND PRESENT AT THE WORK SITE ALONG WITH ALL ACTIVE CONSTRUCTION PERMITS WHEN THE APPROVED WORK IS BEING PERFORMED.

B. THE PERMITTEE MUST COMPLY WITH ALL CONSTRUCTION EMBARGOS ISSUED BY THE NYCDOT INCLUDING THE HOLIDAY EMBARGO.

C. THE PERMITTEE SHALL COMPLY WITH ALL REQUIREMENTS OF THE NYCDOT SPECIAL EVENTS UNIT AS IDENTIFIED BELOW:

1. STREET FAIRS / FESTIVALS

- ALL EXCAVATIONS MUST BE PLATED WITH SKID RESISTANT PLATES.
- PLATES MUST BE RECESSED AND FLUSH WITH PAVEMENT.
- ALL PAVEMENT DEFECTS MUST BE CORRECTED WITHIN OR ADJACENT TO THE WORK ZONE.
- THE CONTRACTOR IS RESPONSIBLE FOR ANY DEFECTS WITHIN THE IMMEDIATE VICINITY IF NYCDOT STREET & ARTERIAL MAINTENANCE CANNOT MAKE REPAIRS DUE TO PROJECT INTERFERENCE (AS DETERMINED BY NYCDOT).
- ALL EQUIPMENT, TRAILERS AND MATERIAL STORAGE MUST BE REMOVED.

2. RUNNING / WALKING / BIKING EVENTS

- ALL EXCAVATIONS MUST BE BACKFILLED AND PAVED OR PLATES MUST BE RECESSED AND PAVED OVER FLUSH WITH PAVEMENT.
- ALL PAVEMENT DEFECTS MUST BE CORRECTED WITHIN OR ADJACENT TO THE WORK ZONE.
- THE CONTRACTOR IS RESPONSIBLE FOR ANY DEFECTS WITHIN THE IMMEDIATE VICINITY IF NYCDOT STREET & ARTERIAL MAINTENANCE CANNOT MAKE REPAIRS DUE TO PROJECT INTERFERENCE (AS DETERMINED BY NYCDOT).
- ALL EQUIPMENT, TRAILERS AND MATERIAL STORAGE MUST BE REMOVED.

3. PARADES

- ALL EXCAVATIONS MUST BE BACKFILLED AND PAVED OR PLATES MUST BE RECESSED AND PAVED OVER FLUSH WITH PAVEMENT.
- FORMATION AND DISPERSAL AREA PLATES MUST BE RECESSED AND FLUSH WITH PAVEMENT (PLATES MUST BE SKID RESISTANT).
- ALL PAVEMENT DEFECTS MUST BE CORRECTED WITHIN OR ADJACENT TO THE WORK ZONE.
- THE CONTRACTOR IS RESPONSIBLE FOR ANY DEFECTS WITHIN THE IMMEDIATE VICINITY IF NYCDOT STREET & ARTERIAL MAINTENANCE CANNOT MAKE REPAIRS DUE TO PROJECT INTERFERENCE (AS DETERMINED BY NYCDOT).
- ALL EQUIPMENT, TRAILERS AND MATERIAL STORAGE MUST BE REMOVED.

4. MAYORAL EVENTS

- ALL EXCAVATIONS MUST BE BACKFILLED AND PAVED OR PLATES MUST BE RECESSED AND PAVED OVER FLUSH WITH PAVEMENT.
- ALL PAVEMENT DEFECTS MUST BE CORRECTED WITHIN OR ADJACENT TO THE WORK ZONE.
- THE CONTRACTOR IS RESPONSIBLE FOR ANY DEFECTS WITHIN THE IMMEDIATE VICINITY IF NYCDOT STREET & ARTERIAL MAINTENANCE CANNOT MAKE REPAIRS DUE TO PROJECT INTERFERENCE (AS DETERMINED BY NYCDOT).
- ALL EQUIPMENT, TRAILERS AND MATERIAL STORAGE MUST BE REMOVED.

D. ALL RELOCATION WORK BY THE UTILITIES SUCH AS; CON EDISON, TELEPHONE, GAS AND CABLE COMPANIES SHALL PRECEDE THE CONTRACTORS' START OF WORK ON ALL AFFECTED ROADWAYS IN THE IMPACTED CONTRACT AREA.

E. THE CONTRACTOR IS ADVISED THAT OTHER CONTRACTORS MAY BE WORKING IN THE GENERAL AREA DURING THE TERM OF THIS STIPULATION. IN WHICH EVENT, THE CONTRACTOR MAY REQUIRE MODIFICATIONS BY THE OCMC-STREETS.

F. THE PERMITTEE IS NOT AUTHORIZED TO ENTER, OCCUPY OR USE ANY PUBLICLY-OWNED OR PRIVATELY OWNED, NON-PAVED, LANDSCAPE OR NON-LANDSCAPED LOCATION WITHOUT SPECIFIC WRITTEN PERMISSION. WHEN THE LOCATION IS WITHIN THE RIGHT-OF-WAY OF A LIMITED-ACCESS ARTERIAL HIGHWAY, **WRITTEN** APPROVAL FROM THE NYCDOT OCMC-HIGHWAYS IS REQUIRED. WHEN THE LOCATION IS WITHIN THE RIGHT-OF-WAY OF A PUBLIC STREET OR PUBLIC PARK, **WRITTEN** APPROVAL FROM THE NEW YORK CITY DEPARTMENT OF TRANSPORTATION OR NEW YORK CITY DEPARTMENT OF PARKS AND RECREATION IS REQUIRED. WHEN THE LOCATION IS WITHIN THE RIGHT-OF-WAY OF ANY OTHER JURISDICTION SUCH AS PRIVATE PROPERTY, STATE, FEDERAL ETC., IT IS THE PERMITTEE'S RESPONSIBILITY TO DETERMINE THE PROPERTY OWNER AND OBTAIN THE WRITTEN APPROVAL.

G. THE PERMITTEE SHALL ADHERE TO THE NYCDOT BUREAU OF BRIDGES' SPECIAL PROVISIONS FOR LANDSCAPE PROTECTION, MAINTENANCE AND RESTORATION, ITEMS 1.18.15 THROUGH 1.18.19, WHENEVER AND WHEREVER ANY OF THE PERMITTEE'S ACTIVITIES OCCUR WITHIN A LIMITED ACCESS ARTERIAL HIGHWAY RIGHT - OF - WAY.

H. NO DEVIATION OR DEPARTURE FROM THESE STIPULATIONS WILL BE PERMITTED WITHOUT THE PRIOR WRITTEN APPROVAL FROM THE OCMC-STREETS. REQUEST FOR SUCH MODIFICATIONS SHALL BE SUBMITTED TO THE OFFICE OF THE OCMC-STREETS, NEW YORK CITY DEPARTMENT OF TRANSPORTATION, A MINIMUM OF TWENTY (20) DAYS IN ADVANCE FOR CONSIDERATION.

I. FOR ANY CONSTRUCTION ACTIVITY RESULTING IN THE FULL CLOSURE OF A ROADWAY FOR MORE THAN 180 CONSECUTIVE CALENDAR DAYS, THE CONTRACTOR MUST PRODUCE AND SUBMIT A COMMUNITY REASSESSMENT, IMPACT AND AMELIORATION (CRIA) STATEMENT TO NYCDOT PLANNING AND OBTAIN THEIR APPROVAL BEFORE APPLYING FOR PERMITS, IN COMPLIANCE WITH THE PROVISIONS OF **LOCAL LAW 24 STREET CLOSURE LAW.**

J. FOR THIS PROJECT THE CONTRACTOR SHALL FURNISH, INSTALL AND MAINTAIN ALL NECESSARY ADVANCE WARNING AND DETOUR SIGNS, TEMPORARY CONTROL DEVICES, BARRICADES, LIGHTS AND FLASHING ARROW BOARDS IN ACCORDANCE WITH THE "MANUAL ON UNIFORM TRAFFIC CONTROL DEVICES," THE TYPICAL SCHEMES INCLUDED IN THIS SPECIFICATION; AND AS ORDERED BY THE ENGINEER-IN-CHARGE AND THE OCMC-STREETS.

K. THE CONTRACTOR SHALL BE RESPONSIBLE FOR IDENTIFYING HIS CONSTRUCTION SIGNAGE. THE IDENTIFICATION SHALL INCLUDE THE CONTRACTOR'S NAME, SPONSORING AGENCY NAME AND THE CONTRACT NUMBER. THE IDENTIFICATION SHALL BE PLACED ON THE BACK OF THE SIGN. THE LETTERING SHALL BE THREE (3) INCHES HIGH.

L. THE OCMC-STREETS RESERVES THE RIGHT TO VOID OR MODIFY THESE STIPULATIONS SHOULD CONSTRUCTION FAIL TO COMMENCE WITHIN TWO (2) YEARS OF THE SIGNED DATE OF THESE STIPULATIONS.

NICOLAS DAGHER, P.E.
EXECUTIVE DIRECTOR
OCMC

GARY SMALLS
DIRECTOR
OCMC-STREETS

City of New York
Department of Design and Construction
30-30 Thomson Avenue
Long Island City, NY 11101

HCP- Draft
April 21, 2020

Attn: Mihir Shah (718) 391-3154

Re: East Side Coastal Resiliency, SANDRESM1
From Montgomery Street to East 15th Street

WORK PERMIT

Stipulations are hereby given to the New York City Department of Design and Construction and its duly authorized representatives, to enter upon and restrict the flow of traffic according to the times and schedules as stipulated herein on the Franklin D. Roosevelt Drive (FDR Drive) in the vicinity of From Montgomery Street East 15 Street for the purpose of installation of East Side Coastal Resiliency, together with all work incidental thereto, subject to the following stipulations:

1. This permission shall be in effect as of xxxxxxxx

2. The Permittee may close lane(s) on the FDR Drive, northbound and/or southbound according with the following schedule:

a) One lane closure:

For the purpose of median reconstruction, sign Structure installations, bridge Pier Demolitions, manhole Flood proofing gate foundation, Concrete floor wall, approach slabs, drainage, barrier Replacement and reconstruction retaining wall replacement and reconstruction, and sewer reconstruction and related work

10:00PM to 5:30AM, Monday night to Friday morning
12:01AM to 6:30AM, Saturday morning
1:00AM to 11:00AM, Sunday morning

b) Two lanes closure:

1:00AM to 5:00AM, Tuesday morning to Friday morning
1:00AM to 7:00AM, Saturday morning
1:00AM to 7:00AM, Sunday morning

c) Partial Ramp closure:

Maintain a ten (10) foot minimum width of travel lane; one ramp closure at a time

From Montgomery Street to East 15th Street for the purpose of installation of street roller gate foundation, Floodwall under FDR Drive Viaduct; reconstruction of sidewalk, parking lot reconstruction under FDR Drive Viaduct, and sewer Reconstruction, as follows:

11:00PM to 5:00AM, Monday night to Friday morning

1:00AM to 7:00AM, Saturday morning
1:00AM to 7:00AM, Sunday morning

d) Full Ramp closure- three (3) times limit for each ramp:

FDR Drive Northbound Exit 3 On-Ramp, FDR Drive Northbound Exit 5 Off-Ramp, and FDR Drive Northbound Exit 5 On-Ramp (one ramp closure at a time), as follows:

1:00AM to 5:00AM, Tuesday morning to Friday morning
1:00AM to 7:00AM, Saturday morning
1:00AM to 7:00AM, Sunday morning

e) Full roadway closure- three (3) times limit for each direction:

Between Exits 2 and 7 in both directions for the purpose of Demolition and Installation of three pedestrian bridges (Corlear's Hook Bridge, Delancey Street Bridge, and East 10th Street Bridge) over the FDR Drive, as follows:

1:00AM to 5:00AM, Tuesday morning to Friday morning
2:00AM to 7:00AM, Saturday morning
2:00AM to 7:00AM, Sunday morning

3. The Permittee must submit the traffic mitigation analysis, mitigation measures (signal timing changes, Traffic enforcement agents (TEA), etc.), and Maintenance and Protection of Traffic (MPT) plans for proposed full roadway closure in order to grant OCMC final approval and associated roadway construction permits.

4. The Permittee must arrange to provide Traffic enforcement agents (TEA) at the designated intersections as per the Maintenance and Protection of Traffic (MPT) plans.

5. Significant lane closures of Arterial Highways where at any time fifty percent or more of the roadway lanes are closed, notification shall be given to the public via the placement of Variable Message Signs (VMS) seven (7) days prior to the actual closure.

6. The lane closures shall conform to the New York State Dept. of Transportation, Design Guide and Standard for Maintenance, and Protection of Traffic, the Manual of Uniform Traffic Devices (MUTCD), and OCMC approved plans.

7. The Permittee is required to submit a weekly schedule of work. This schedule is to be sent to sedward@dot.nyc.gov on the Wednesday preceding the next weeks work. The schedule will include the following information:

The name of the roadway/bridge on which lanes will be closed
The number of lanes to be closed
The direction in which the lanes will be closed
The hours and days of the lane closing

8. All lane closures must be coordinated with the Engineering in Charge (EIC) for the other adjacent projects.

9. The Permittee shall notify in writing, the New York City Department of Transportation Office of Construction Mitigation and Coordination (NYCDOT-OCMC), three (3) weeks' notice prior to any proposed full lane closure.

10. All lane closures must be coordinated with the Engineering in Charge (EIC) for the other adjacent projects & OCMC.

11. The Permittee MUST obtain a permit from the Overweight/ over dimension Unit of the NYCDOT Bureau of Bridges for Overweight/ over dimension vehicles on the Parkway/Drive.

12. This permit must be present on site when the approved work is being performed.

13. This permit is not valid unless it is signed by both the New York City Department of Transportation representative and the authorized representative of the Permittee.

14. In the event of a strike against the NYC Transit, no lane or ramp closures will be permitted from 5:00 AM to 12:00AM (midnight).

15. Section 24 - 224, Administrative Code Variance, is hereby granted for hours and days stipulated above.

16. During the time a lane closure is permitted, the Permittee may intermittently stop traffic on the adjacent lane(s) of the same roadway for periods not to exceed five (5) minutes in duration for the purpose of transporting or securing equipment that my extend beyond the closed lane(s). A minimum of one (1) hour, or until the traffic queue is relieved, whichever period is shorter, is required between two such closures.

17. No staging and/or storage sites are authorized or will be permitted unless approved in writing (where owned by New York City) by the New York City Department of Transportation's Division of Roadway Repair and Maintenance (RRM) and/or the New York City Department of Parks and Recreation (if park land is involved) or (where State owned) by New York State Department of Transportation with New York City concurrence where applicable. Except for State owned sites where City concurrence is not necessary changes in the site or limits can only be made by an amendment to this permit as applicable. A detailed drawing must be submitted and will become an attachment to the amendment. A DPR Permit shall constitute written approval from the Parks Dept.

18. The Permittee agrees to assume all responsibility for injury or damages to private and/or City property caused through the operations of the permit and to save and hold harmless the City of New York and the New York City Department of Transportation from all claims and suits which may arise therefrom.

19. The Permittee shall notify in writing, the New York City Department of Transportation, OCMC three (3) weeks' notice prior to any proposed lane change, shift or ramp closures prior to commencing work operations. Four (4) weeks' notice is required when it is anticipated that temporary traffic signals and/or signal timing adjustments will be needed.

20. The Permittee shall be responsible to provide notification to the local Community Board and Borough President's Office prior to the commencement of work. Additionally notification shall be made to the local Councilman's office. Proof of notification must be filed with the OCMC prior to the commencement of work.

21. The Permittee shall notify the New York City Dept. of Transportation's Situation Room at (718-433-3340), the NYPD Traffic Management Center at (718 706-6756), the Chief of Emergency Medical Services at (718-999-2770) and the local fire house prior to his/her proposed traffic lane reductions or street closings for any purpose. The Permittee shall also immediately notify the Situation Room upon reopening and in the event of an emergency condition.

22. In the event, a full highway closure for period greater than fifteen (15) minutes is permitted, the Permittee must notify all those parties listed in the prior three stipulations at least two weeks in advance. Additionally the Permittee must prepare a press release for the TV, Radio and Newspaper Media at least one week prior to the closure.

23. The Permittee shall adhere to all pertinent rules and regulations of the New York City Department of Transportation relative to the use and occupancy of street space, the provisions of his agreement and the performance of his work.

24. The Permittee shall adhere to the NYCDOT Bureau of Bridges' Special Provisions for Landscape Protection, Maintenance and Restoration, items 1.18.15 through 1.18.19, whenever and wherever any of the Permittee's activities occur within a limited access arterial highway right - of - way. Copies of these provisions may be obtained from the New York City Department of Transportation's Director of Arterial Maintenance at 212 – 487-6837.

25. This Permit is limited to activity performed in conformance with this agreement with the New York City Department of Transportation and does not permit any other activities, which could be a hazard or distraction to the roadway user.

26. No deviation or departure from these stipulations will be permitted without the prior written approval of the New York City Department of Transportation. Requests for such modifications shall be submitted to the OCMC a minimum of ten (10) days in advance for consideration.

27. To ensure a traffic flow at all times storage of materials and equipment shall not be permitted within the traveled way of the highway. Storage areas shall be separated from the traveled way by a clear space of 30 feet minimum width, unless such storage is placed behind concrete barrier or permanently installed bridge railing.

28. Any excavations shall be adequately fenced and/or decked over by the Permittee to preclude entry by errant vehicles, pedestrians or animals.

29. The Permittee shall insure that construction materials and/or excavated soil and rocks temporarily stored on slopes are secured by straw bales or other effective means to prevent their movement into the travel way and clear zone (recovery zone) area.

30. When work is performed in or adjacent to sidewalk areas, a safe pedestrian walkway having a minimum width of five (5) feet shall be provided at all times by the Permittee.

31. Concurrent with construction work of this contract, if other projects on this and/or adjacent highways are under construction then the Permittee is to become familiar with the scheduling of those projects and schedule his activities accordingly. To facilitate the flow of traffic, the permissible work hours may be modified as deemed necessary by the New York City Department of Transportation.

32. In order to provide an adequate transition for the safe flow of traffic, when the Permittee's (or another Permittee's) work sites are in two (2) different lanes in the same direction, those work sites shall be separated by a distance of at least two (2) miles.

33. Warning signs and traffic safety devices shall be provided, installed, maintained and removed by the Permittee in accordance with the New York State Department of Transportation's "Manual of Uniform Traffic Control Devices". The Permittee shall provide the appropriate channelization for traffic approaching and leaving his/her worksite. The Permittee shall provide flag persons, cones, barricades, etc. as required for public safety. The Permittee is responsible for the adequacy of the safety devices. The Permittee shall coordinate his/her lane closures with the lane closures of any other Permittee working within 2 miles of his/her work area.

34. Operation of a crane, derrick, shovel or other similar equipment for any and all work within the streets shall be carried out by the Permittee in accordance with the Rules, Regulations and Requirements of the New York City Department of Transportation and the New York City Department of Buildings and shall comply with all provisions of the New York City Noise Control Code. In addition, if this equipment is to be placed so that any part of the load will be superimposed on the sidewalk or roadway, the Permittee must file, with the New York City Department of Transportation, Office of Construction Mitigation and Coordination, a statement by a Professional Engineer, licensed by the State of New York, certifying the following:

    I. That the sidewalk or roadway area and the supporting subgrade can safely bear the crane load. Should the condition of the sidewalk or roadway area require that the crane load be distributed over a larger area than afforded by the elements of the crane, the engineer shall furnish the full dimensioned details of the load distribution.

    II. That the Engineer has taken all necessary measures to ascertain that there is no vault or subway tunnel underneath the sidewalk area or that if a vault or subway tunnel does exist its roof is sufficiently strong to support the load to be superimposed thereof.

    III. That the sheeting or retaining walls supporting any excavations adjoining the sidewalk or roadway area required to carry a load have been examined by the Engineer and have been found to be sufficiently strong to support the area carrying the crane load. Should the crane be employed making any excavation adjacent to the crane, the Engineer shall specify the sheeting or retaining wall reinforcement required to support the crane.

35. A Holiday Embargo is in effect for the Holidays (as determined by the New York City Office of Payroll Administration) with the following provisions:

    I. When a Holiday falls or is observed by the City of New York on a Monday or Friday no lane or ramp closures are permitted from noon on the previous business day to 6:01 AM on the following business day. For example if the holiday falls or is observed on Friday then no lane closure would be permitted from 12:01 PM on Thursday to 6:01 AM on Monday. If the Holiday falls or is observed on Monday then no lane closure is permitted from 12:01 PM on Friday to 6:01 AM on Tuesday. In addition when a Holiday falls or is observed midweek (Tuesday, Wednesday or Thursday) no Lane closures shall be permitted from noon on the previous business day to 6:01 AM on the following business day.

    II. The Holiday Embargo as detailed above is in effect for the following Holidays: New Year's Day, Mother Day, Memorial Day, Independence Day, Labor Day, Thanksgiving Day, and Christmas Day.

Note: for Thanksgiving Day the Embargo begins on Wednesday at 12 noon and extends to Monday 6 AM, at which time the original stipulations shall be in effect.

III. A "Holiday Construction Embargo" will be in effect on Gridlock Alert Days from mid - November (the exact dates will be published each year in the New York City Department of Transportation's OCMC yearly Holiday Embargo release, there are approximately ten (10)) to January 2nd. During this period, no lane or ramp closings will be permitted from 6:00 AM to Midnight except by written permission from the OCMC. This stipulation supersedes all others in this permit.

IV. A special embargo is in effect for the following holidays: Eve of Jewish New Year, Eve of Yom Kippur, Eve of Passover. No lane or ramp closures permitted from 1:00 PM to sundown.

36. A "Holiday Construction Embargo" will be in effect on Gridlock Alert Days from mid - November (the exact dates will be published each year in the New York City Department of Transportation's OCMC yearly Holiday Embargo release, there are approximately ten (10) days to January 2nd. During this period, no lane or ramp closings will be permitted from 6:00 AM to Midnight except by written permission from the OCMC. This stipulation supersedes all others in this permit.

37. When events occur at FOR YANKEE STADIUM, no lane or ramp closures will be permitted as noted below:

    a. From two hours before the event begins until one hour after the event begins, no lane or ramp closures permitted on: FDR Drive - northbound

    b. From one hour after the event begins until two hours after the event concludes, no lane or ramp closures permitted on: FDR Drive - southbound

38. Work cannot be performed during the New York City 5 Boroughs Bike Tour and the New York City Marathon, unless granted special permission by the New York City Department of Transportation, Office of Construction Mitigation and Coordination.

39. The Department of Parks and Recreation's conditions, terms and special conditions as presented in their Permit, is an integral part of this Permit.

40. Boring holes shall be back-filled with sand and compacted. In sidewalks, the last six (6) inches of the holes shall be restored with concrete. In paved areas the last six (6) inches shall be restored with concrete and/or asphalt to match the existing. On structural decks, holes shall be restored in kind.

41. The Permittee shall comply with the Industrial Code of the State of New York Part (Rule No.53) relating to Construction, Excavation and Demolition Operations at or near underground facilities. Additionally, the Permittee shall similarly notify the owners of overhead cables or other electrical or street lighting equipment in the area covered by the Permit.

42. The Permittee is reminded that the appropriate Rules and Regulations that apply to the cleaning and painting of structural steel must be rigidly followed, as specified by NYSDOT Specifications.

43. When a contractor performs work at night, the work site shall be illuminated to the satisfaction of the Engineer-In-Charge (EIC). The EIC shall be the sole judge of when illumination is required.

44. The contractor shall be responsible for identifying his/her construction signage. The identification shall include the contracting agency, the contractors name and the contract number. This identification shall be placed on the back of all signs.

45. The Permittee shall, at its own expense, be under absolute obligation to determine the location of and provide protection from damage or loss for all subsurface facilities and overhead structures in the permit area. In the event of any damage or loss to such subsurface facilities and overhead structures, the Permittee shall promptly replace or repair such facilities and structures, as directed by the New York City Department of Transportation or other City agency having jurisdiction thereof or by the owner thereof.

46. The City makes no representation as to the character of the fill in the streets, and voids therein, or the condition of the sidewalks. The Permittee accepts full responsibility and liability for any disturbance or damage, which may be caused to adjoining pavements, sidewalks or structures by or in connection with the permit activity. All damaged sidewalk or roadway pavements shall be restored (to the nearest full flag for sidewalks) in conformance with the Standard Specifications of the New York (City/State) Department of Transportation.

47. The Permittee shall furnish and install tarpaulins enclosing the immediate site of his cleaning and painting operations to insure complete protection of the general public and property, both on and below the roadway against possible damage from scraping, paint drippings, windblown paint, dust, concrete, etc. This permit does not constitute approval of either painting or paint removal methodology. All signs and signals shall be protected daily with clean and transparent coverings.

48. The washing of concrete truck drums within the Arterial Highway or city street right - of - way is strictly prohibited unless the contractor utilizes the New York State approved method.

49. When water is being used at the work site for any purpose (i.e. concrete curing, saw cutting, etc.), the Permittee is required to insure, through any and all appropriate measures, that the water does not freeze on the roadway or sidewalks. The Permittee will be responsible to maintain a clear and safe travel path.

50. The Permittee's vehicles shall not exceed the posted weight and/or height restrictions for any street, highway, bridge or viaduct section that he/she must travel upon.

51. During the snow season, the contractor shall be required to post “LIFT PLOW” signs at all locations (in both directions if necessary) where they have installed steel plates.

52. Roads used for the hauling of materials shall be kept free from debris and maintained by the Permittee and left in a condition satisfactory to the engineer-in- charge (EIC).

53. On roadways/streets where rush-hour parking and/or standing regulations are posted, the Permittee shall modify his schedule to conform to those (rush hour) restrictions.

54. The Permittee shall not park his equipment or store material overnight where it is deemed to be a safety hazard to the traveling public.

55. The Permittee shall not obstruct fire hydrants, crosswalks, pedestrian ramps, fire alarm boxes, bus stops or any public utility while performing his/her work. The Permittee may not move or remove “Bus Stop” signs without prior written approval from both the New York City Department of Transportation and the New York City Transit.

56. This is not a Parking Permit. The Permittee shall obey all traffic laws and regulations.

57. This Permit may be amended to cover new or unforeseen conditions at the discretion of the New York City Department of Transportation, after consultation with the Permittee. The New York City Department of Transportation reserves the right to cancel this permit at any time for any valid reason.

58. This Permit, unless terminated at the discretion of the New York City Department of Transportation, will expire on xxxxx.

APPROVED: _____
Jay Jaber, P.E.
Assistant Commissioner
Permit Management and Construction Control

_____
Mihir Shah, PE
Director, Coastal Resiliency NYC

SE: sedward@dot.nyc.gov

CC: Campbell, Dagher, Maniscalco, Edward, Situation Room, Police Dept. (Traffic Division), Fire Department, Litigation Support, HIQA – Highway Unit 55 Water Street 7th Fl. CC file, Project file.

NYC Department of Design and Construction
30-30 Thomson Avenue
Long Island City, NY 11101

HCP- **Draft**
April 2, 2020

Re: East Side Coastal Resiliency, ESCR
Pedestrian Bridge Replacement Project
FDR Drive between Exits 2 and 7
Six (6) 10-hour closures

WORK PERMIT

Department of Design and Construction and its duly authorized representatives to enter upon and restrict the flow of traffic according to the times and schedules as stipulated herein on the Franklin D. Roosevelt Drive (FDR Drive) between Exits 2 and 7 for the purpose of replacement of three pedestrian bridges (Corlear's Hook Bridge, Delancey Street Bridge, and East 10th Street Bridge) over the FDR Drive, together with all work incidental thereto, subject to the following stipulations:

1. This permission shall be in effect as of xxxxx

2. The Permittee may fully close the FDR Drive northbound and/or southbound between Exits 2 and 7, in according to the OCMC approved MPT plane, from 12:00 AM to 10:00 AM on Sunday morning; 3-6 times total over the course of 12-18 months. (In order to grant final approval, the Permittee must complete the traffic mitigation analysis to satisfy the NYCDOT-OCMC requirements).

3. The Permittee shall notify in writing, the New York City Department of Transportation Office of Construction Mitigation and Coordination (NYCDOT-OCMC), fourteen (14) working days prior to any proposed full lane closure.

4. The lane closures shall conform to the New York State Dept. of Transportation, Design Guide and Standard for Maintenance, and Protection of Traffic, the Manual of Uniform Traffic Devices (MUTCD), and OCMC approved plans.

5. The Permittee is required to submit a weekly schedule of work. This schedule is to be sent to OCMC on the Wednesday preceding the next weeks work. The schedule will include the following information:

The name of the roadway/bridge on which lanes will be closed
The number of lanes to be closed
The direction in which the lanes will be closed
The hours and days of the lane closing

6. To reserve a lane or roadway closures on primary, secondary and local streets; the Permittee must obtain a separate permit from OCMC – Street.

7. Significant lane closures of Arterial Highways where at any time fifty percent or more of the roadway lanes are closed, notification shall be given to the public via the placement of Variable Message Signs (VMS) seven (7) days prior to the actual closure.

8. In the event that any non-emergency construction work results in the closing of

(i) more than (2/3) of the moving lanes per direction on any street for more than 15 minutes per hour between the hours of 1 AM and 5 AM or

(ii) half (50%) or more of the moving lanes on any street or limited access roadway, for a duration of more than four minutes or two traffic light cycles of the nearest traffic signal, whichever is less, during all other hours,

the Permittee shall post at the site of the closing a public notification seven(7) calendar days prior to such closing in a manner directed by OCMC.

9. If a full highway closure is deemed necessary, the Permittee must submit a closure request and a temporary detour plan for approval from OCMC at least thirty (30) working days prior to any proposed closure (case by case basis). The Permittee must arrange to provide Traffic enforcement agents (TEA) at designated intersections as OCMC requirement.

10. The Permittee MUST arrange to provide Traffic Enforcement Agents in accordance with NYCDOT OCMC requirements.

11. All lane closures must be coordinated with the Engineering in Charge (EIC) for the other adjacent projects & OCMC.

12. The Permittee MUST obtain a permit from the Overweight/Overdimension Unit of the NYCDOT Bureau of Bridges for overweight/overdimension vehicles on the Parkway/Drive.

13. This permit must be present on site when the approved work is being performed.

14. This permit is not valid unless it is signed by both the New York City Department of Transportation representative and the authorized representative of the Permittee.

15. In the event of a strike against the NYC Transit, no lane or ramp closures will be permitted from 5:00 AM to 12:00AM (midnight).

16. Section 24 - 224, Administrative Code Variance, is hereby granted for hours and days stipulated above.

17. During the time a lane closure is permitted, the Permittee may intermittently stop traffic on the adjacent lane(s) of the same roadway for periods not to exceed five (5) minutes in duration for the purpose of transporting or securing equipment that my extend beyond the closed lane(s). A minimum of one (1) hour, or until the traffic queue is relieved, whichever period is shorter, is required between two such closures.

18. No staging and/or storage sites are authorized or will be permitted unless approved in writing (where owned by New York City) by the New York City Department of Transportation's Division of Roadway Repair and Maintenance (RRM) and/or the New York City Department of Parks and Recreation (if park land is involved) or (where State owned) by New York State Department of Transportation with New York City concurrence where applicable. Except for State owned sites where City concurrence is not necessary changes in the site or limits can only be made by an amendment to this permit as applicable. A detailed drawing must be submitted and will become an attachment to the amendment. A DPR Permit shall constitute written approval from the Parks Dept.

19. The Permittee agrees to assume all responsibility for injury or damages to private and/or City property caused through the operations of the permit and to save and hold harmless the City of New

York and the New York City Department of Transportation from all claims and suits which may arise therefrom.

20. The Permittee shall notify in writing, the New York City Department of Transportation, OCMC ten (10) working days prior to any proposed lane change, shift or ramp closures prior to commencing work operations. Four (4) weeks' notice is required when it is anticipated that temporary traffic signals and/or signal timing adjustments will be needed.

21. The Permittee shall be responsible to provide notification to the local Community Board and Borough President's Office prior to the commencement of work. Additionally notification shall be made to the local Councilman's office. Proof of notification must be filed with the OCMC prior to the commencement of work.

22. The Permittee shall notify the New York City Dept. of Transportation's Situation Room at (718-433-3340), the NYPD Traffic Management Center at (718 706-6756), the Chief of Emergency Medical Services at (718-999-2770) and the local fire house prior to his/her proposed traffic lane reductions or street closings for any purpose. The Permittee shall also immediately notify the Situation Room upon reopening and in the event of an emergency condition.

23. In the event, a full highway closure for period greater than fifteen (15) minutes is permitted, the Permittee must notify all those parties listed in the prior three stipulations at least two weeks in advance. Additionally the Permittee must prepare a press release for the TV, Radio and Newspaper Media at least one week prior to the closure.

24. The Permittee shall adhere to all pertinent rules and regulations of the New York City Department of Transportation relative to the use and occupancy of street space, the provisions of his agreement and the performance of his work.

25. The Permittee shall adhere to the NYCDOT Bureau of Bridges' Special Provisions for Landscape Protection, Maintenance and Restoration, items 1.18.15 through 1.18.19, whenever and wherever any of the Permittee's activities occur within a limited access arterial highway right - of - way. Copies of these provisions may be obtained from the New York City Department of Transportation's Director of Arterial Maintenance at 212 – 487-6837.

26. This Permit is limited to activity performed in conformance with this agreement with the New York City Department of Transportation and does not permit any other activities, which could be a hazard or distraction to the roadway user.

27. No deviation or departure from these stipulations will be permitted without the prior written approval of the New York City Department of Transportation. Requests for such modifications shall be submitted to the OCMC a minimum of ten (10) days in advance for consideration.

28. To ensure a traffic flow at all times storage of materials and equipment shall not be permitted within the traveled way of the highway. Storage areas shall be separated from the traveled way by a clear space of 30 feet minimum width, unless such storage is placed behind concrete barrier or permanently installed bridge railing.

29. Any excavations shall be adequately fenced and/or decked over by the Permittee to preclude entry by errant vehicles, pedestrians or animals.

30. The Permittee shall insure that construction materials and/or excavated soil and rocks temporarily stored on slopes are secured by straw bales or other effective means to prevent their movement into the travel way and clear zone (recovery zone) area.

31. When work is performed in or adjacent to sidewalk areas, a safe pedestrian walkway having a minimum width of five (5) feet shall be provided at all times by the Permittee.

32. Concurrent with construction work of this contract, if other projects on this and/or adjacent highways are under construction then the Permittee is to become familiar with the scheduling of those projects and schedule his activities accordingly. To facilitate the flow of traffic, the permissible work hours may be modified as deemed necessary by the New York City Department of Transportation.

33. In order to provide an adequate transition for the safe flow of traffic, when the Permittee's (or another Permittee's) work sites are in two (2) different lanes in the same direction, those work sites shall be separated by a distance of at least two (2) miles.

34. Warning signs and traffic safety devices shall be provided, installed, maintained and removed by the Permittee in accordance with the New York State Department of Transportation's "Manual of Uniform Traffic Control Devices". The Permittee shall provide the appropriate channelization for traffic approaching and leaving his/her worksite. The Permittee shall provide flagpersons, cones, barricades, etc. as required for public safety. The Permittee is responsible for the adequacy of the safety devices. The Permittee shall coordinate his/her lane closures with the lane closures of any other Permittee working within 2 miles of his/her work area.

35. Operation of a crane, derrick, shovel or other similar equipment for any and all work within the streets shall be carried out by the Permittee in accordance with the Rules, Regulations and Requirements of the New York City Department of Transportation and the New York City Department of Buildings and shall comply with all provisions of the New York City Noise Control Code. In addition, if this equipment is to be placed so that any part of the load will be superimposed on the sidewalk or roadway, the Permittee must file, with the New York City Department of Transportation, Office of Construction Mitigation and Coordination, a statement by a Professional Engineer, licensed by the State of New York, certifying the following:

I. That the sidewalk or roadway area and the supporting subgrade can safely bear the crane load. Should the condition of the sidewalk or roadway area require that the crane load be distributed over a larger area than afforded by the elements of the crane, the engineer shall furnish the full dimensioned details of the load distribution.

II. That the Engineer has taken all necessary measures to ascertain that there is no vault or subway tunnel underneath the sidewalk area or that if a vault or subway tunnel does exist its roof is sufficiently strong to support the load to be superimposed thereof.

III. That the sheeting or retaining walls supporting any excavations adjoining the sidewalk or roadway area required to carry a load have been examined by the Engineer and have been found to be sufficiently strong to support the area carrying the crane load. Should the crane be employed making any excavation adjacent to the crane, the Engineer shall specify the sheeting or retaining wall reinforcement required to support the crane.

36. A Holiday Embargo is in effect for the Holidays (as determined by the New York City Office of Payroll Administration) with the following provisions:

I. When a Holiday falls or is observed by the City of New York on a Monday or Friday no lane or ramp closures are permitted from noon on the previous business day to 6:01 AM on the following business day. For example if the holiday falls or is observed on Friday then no lane closure would be permitted from 12:01 PM on Thursday to 6:01 AM on Monday. If the Holiday falls or is observed on Monday then no lane closure is permitted from 12:01 PM on Friday to 6:01 AM on Tuesday. In addition when a Holiday falls or is observed midweek (Tuesday, Wednesday or Thursday) no Lane

closures shall be permitted from noon on the previous business day to 6:01 AM on the following business day.

II. The Holiday Embargo as detailed above is in effect for the following Holidays: New Year's Day, Mother Day, Memorial Day, Independence Day, Labor Day, Thanksgiving Day, and Christmas Day. ***Note: for Thanksgiving Day the Embargo begins on Wednesday at 12 noon and extends to Monday 6 AM, at which time the original stipulations shall be in effect.***

III. A "Holiday Construction Embargo" will be in effect on Gridlock Alert Days from mid - November (the exact dates will be published each year in the New York City Department of Transportation's OCMC yearly Holiday Embargo release, there are approximately ten (10)) to January 2nd. During this period, no lane or ramp closings will be permitted from 6:00 AM to Midnight except by written permission from the OCMC. This stipulation supersedes all others in this permit.

IV. A special embargo is in effect for the following holidays: Eve of Jewish New Year, Eve of Yom Kippur, Eve of Passover. No lane or ramp closures permitted from 1:00 PM to sundown.

37. A "Holiday Construction Embargo" will be in effect on Gridlock Alert Days from mid - November (the exact dates will be published each year in the New York City Department of Transportation's OCMC yearly Holiday Embargo release, there are approximately ten (10) days to January 2nd. During this period, no lane or ramp closings will be permitted from 6:00 AM to Midnight except by written permission from the OCMC. This stipulation supersedes all others in this permit.

38. When events occur at FOR YANKEE STADIUM, no lane or ramp closures will be permitted as noted below:

a. From two hours before the event begins until one hour after the event begins, no lane or ramp closures permitted on: FDR Drive - northbound

b. From one hour after the event begins until two hours after the event concludes, no lane or ramp closures permitted on: FDR Drive - southbound

39. Work cannot be performed during the New York City 5 Boroughs Bike Tour and the New York City Marathon, unless granted special permission by the New York City Department of Transportation, Office of Construction Mitigation and Coordination.

40. The Department of Parks and Recreation's conditions, terms and special conditions as presented in their Permit, is an integral part of this Permit.

41. Boring holes shall be back-filled with sand and compacted. In sidewalks, the last six (6) inches of the holes shall be restored with concrete. In paved areas the last six (6) inches shall be restored with concrete and/or asphalt to match the existing. On structural decks, holes shall be restored in kind.

42. The Permittee shall comply with the Industrial Code of the State of New York Part (Rule No.53) relating to Construction, Excavation and Demolition Operations at or near underground facilities. Additionally, the Permittee shall similarly notify the owners of overhead cables or other electrical or street lighting equipment in the area covered by the Permit.

43. The Permittee is reminded that the appropriate Rules and Regulations that apply to the cleaning and painting of structural steel must be rigidly followed, as specified by NYSDOT Specifications.

44. When a contractor performs work at night, the work site shall be illuminated to the satisfaction of the Engineer-In-Charge (EIC). The EIC shall be the sole judge of when illumination is required.

45. The contractor shall be responsible for identifying his/her construction signage. The identification shall include the contracting agency, the contractors name and the contract number. This identification shall be placed on the back of all signs.

46. The Permittee shall, at its own expense, be under absolute obligation to determine the location of and provide protection from damage or loss for all subsurface facilities and overhead structures in the permit area. In the event of any damage or loss to such subsurface facilities and overhead structures, the Permittee shall promptly replace or repair such facilities and structures, as directed by the New York City Department of Transportation or other City agency having jurisdiction thereof or by the owner thereof.

47. The City makes no representation as to the character of the fill in the streets, and voids therein, or the condition of the sidewalks. The Permittee accepts full responsibility and liability for any disturbance or damage, which may be caused to adjoining pavements, sidewalks or structures by or in connection with the permit activity. All damaged sidewalk or roadway pavements shall be restored (to the nearest full flag for sidewalks) in conformance with the Standard Specifications of the New York (City/State) Department of Transportation.

48. The Permittee shall furnish and install tarpaulins enclosing the immediate site of his cleaning and painting operations to insure complete protection of the general public and property, both on and below the roadway against possible damage from scraping, paint drippings, windblown paint, dust, concrete, etc. This permit does not constitute approval of either painting or paint removal methodology. All signs and signals shall be protected daily with clean and transparent coverings.

49. The washing of concrete truck drums within the Arterial Highway or city street right - of - way is strictly prohibited unless the contractor utilizes the New York State approved method.

50. When water is being used at the work site for any purpose (i.e. concrete curing, saw cutting, etc.), the Permittee is required to insure, through any and all appropriate measures, that the water does not freeze on the roadway or sidewalks. The Permittee will be responsible to maintain a clear and safe travel path.

51. The Permittee's vehicles shall not exceed the posted weight and/or height restrictions for any street, highway, bridge or viaduct section that he/she must travel upon.

52. During the snow season, the contractor shall be required to post “LIFT PLOW” signs at all locations (in both directions if necessary) where they have installed steel plates.

53. Roads used for the hauling of materials shall be kept free from debris and maintained by the Permittee and left in a condition satisfactory to the engineer-in- charge (EIC).

54. On roadways/streets where rush-hour parking and/or standing regulations are posted, the Permittee shall modify his schedule to conform to those (rush hour) restrictions.

55. The Permittee shall not park his equipment or store material overnight where it is deemed to be a safety hazard to the traveling public.

56. The Permittee shall not obstruct fire hydrants, crosswalks, pedestrian ramps, fire alarm boxes, bus stops or any public utility while performing his/her work. The Permittee may not move or remove “Bus Stop” signs without prior written approval from both the New York City Department of Transportation and the New York City Transit.

57. This is not a Parking Permit. The Permittee shall obey all traffic laws and regulations.

58. This Permit may be amended to cover new or unforeseen conditions at the discretion of the New York City Department of Transportation, after consultation with the Permittee. The New York City Department of Transportation reserves the right to cancel this permit at any time for any valid reason.

59. This Permit, unless terminated at the discretion of the New York City Department of Transportation, will expire on xxxxx.

ELECTRONIC SIGNATURE BY EDWARD CAMPBELL, DIRECTOR OF OCMC HIGHWAYS
DATED Friday, April 3, 2020

APPROVED: _____
Jay Jaber, P.E.
Assistant Commissioner
Permit Management and Construction Control

_____
DULY AUTHORIZED
REPRESENTATIVE OF PERMITTEE

OCMS: SE: sedward@dot.nyc.gov

CC: Campbell, Dagher, Maniscalco, Edward, Situation Room, Police Dept. (Traffic Division), Fire Department, Litigation Support, HIQA – Highway Unit 55 Water Street 7th Fl.

DEPARTMENT OF THE ARMY PERMIT

Permittee: **New York City Department of Design and Construction**
30-30 Thomson Avenue
Long Island City, NY 11101
(718) 391-3134

Permit Number: **NAN-2019-00596**

Date Issued: **December 2, 2020**

Issuing Office: **U.S. Army Corps of Engineers, New York District**

NOTE: The term "you" and its derivatives, as used in this permit, means the permittee or any future transferee. The term "this office" refers to the appropriate district or division office of the Corps of Engineers having jurisdiction over the permitted activity or the appropriate official of that office acting under the authority of the commanding officer.

You are authorized to perform work in accordance with the terms and conditions specified below.

Project Description:

Replace the East River Park Esplanade deck, relocate the two existing embayments, construct concrete piers for the flyover bridge, relocate ten sewer outfalls, replace deteriorating piles and fill a portion of the area underneath the existing Fireboat House platform, and dewater sewer outfall work areas using cofferdams. The project work is estimated to take approximately five years to complete. The work will result in a total of up to approximately 0.41-acre of permanent impacts to Waters of the United States (WOTUS), including open water, and a total of approximately 1.07-acres of temporary disturbances to WOTUS, including open water.

<u>Existing Bulkhead and East River Esplanade</u> (see sheets 5-29)
Remove approximately 6,327-linear feet (1.2-miles) of the existing bulkhead, East River Park Esplanade concrete deck, varying from approximately 21-feet to 32-feet wide, and select formwork, located seaward of the plane of Mean High Water (MHW). Install a new sheet pile cut-off wall in-place or landward of the existing bulkhead alignment. Reconstruct the esplanade deck to structurally support fill. The existing East River bulkhead, running underneath the esplanade for the length of the project area, will be removed and replaced, in-place or landward of existing, with a new steel sheetpile "cut-off wall". New sections of the cut-off wall will be installed in the locations of the two existing embayments (see description below). Existing timber and/or steel support piles underneath the existing esplanade will remain.

<u>Embayments</u>
Relocate two existing embayments, including the North Embayment and the South Embayment, within the project area. The two new embayments are comparable in size to the two existing embayments, which will be filled.

Existing South Embayment (see sheets 8, 17, 18, 33, and 38A)
Demolish the existing South Embayment, approximately 5,042 square feet (0.116-acre) in size within WOTUS, and the pedestrian bridge and piles, approximately 3,130 square feet (0.072-acre). Install a new cut-off wall, approximately 174-feet long, across the face of the existing South Embayment in alignment with the existing bulkhead on the north and south ends. Backfill the area (0.116-acre) behind the new wall with approximately 960-cubic yards of manufactured lightweight ceramic aggregate fill below the plane of Spring High Water (SHW). Redesign the existing pedestrian bridge as a continuation of the esplanade, supported by approximately eighteen (18) new two-feet diameter steel piles filled with a total of approximately 118 cubic yards of cast-in-place concrete below SHW, resulting in permanent impacts to approximately 0.001-acre of WOTUS.

New South Embayment (see sheets 6, 14, 31 and 38)
Demolish approximately 270-linear feet of the existing esplanade and formwork. Excavate the existing upland shoreline to create a new South Embayment, approximately 7,923 square feet (0.182-acres) in size. Install a total of approximately 20-linear feet of new cut-off wall seaward of the plane of SHW, including 10-feet on the north and south end, in order to tie the new shoreline to the existing sheet pile wall. Two triangular over-water platforms, each totaling approximately 225 square feet-feet and supported by up to 10 concrete-filled steel piles, will be placed on the north and south ends of the new embayment to transition the esplanade to the inland walkway and provided access compliant with the requirements of the Americans with Disabilities Act (ADA). Existing piles will be cut off at or above the mud line. Approximately 21 existing piles cut off above the mud line will be fitted with jackets to provide habitat structure. Place up to 400 cubic yards of new riprap in an area approximately 25-feet wide and 180-feet long, on the shoreline below the SHW, to stabilize the new bank slope. Construct a breakwater below Mean Low Water (MLW), approximately 12-feet wide and 190-feet long, install approximately eighty-five square concrete blocks, each approximately four feet in size on each side (200 cubic yards total). Install up to a total of twenty-five pre-cast concrete tidal pools, each approximately four-feet wide by three and one-half feet long, at the plane of MHW to provide habitat structure in the intertidal zone.

Existing North Embayment (see sheets 10, 21, 36 and 39A)
Demolish the existing North Embayment, approximately 7,484 square feet (0.172-acre) in size within WOTUS, and associated over-water pedestrian walkway and piles, approximately 4,280 square feet (0.098-acre). Install a new cut-off wall, approximately 238-linear feet long, across the face of the existing North Embayment in alignment with the existing cut-off wall on the north and south ends. Backfill behind the new wall (0.172-acre) with approximately 1,286-cubic yards of manufactured lightweight ceramic aggregate fill below the plane of SHW. Redesign the existing pedestrian bridge as a continuation of the esplanade, supported by approximately thirty-five (35) new two-feet diameter steel piles filled with a total of approximately 228 cubic yards of cast-in-place concrete below SHW, resulting in permanent impacts to approximately 0.003-acre of WOTUS.

New North Embayment (see sheets 20, 26, 35, and 39)
Demolish approximately 265-linear feet of the existing esplanade and formwork. Excavate the

existing upland shoreline to create a new North Embayment, approximately 4,854 square feet (0.111-acres) in size. Install a total of approximately 20-linear feet of new cut-off wall seaward of the plane of SHW, including 10-feet on the north and south end, in order to tie the new shoreline to the existing sheet pile wall. Two triangular over-water platforms, each totaling approximately 350 square feet-feet and supported by ten concrete-filled steel piles, will be placed on the north and south ends of the new embayment to transition the esplanade to the inland walkway and provided ADA access. Existing piles will be cut off at or above the mud line. Approximately 11 existing piles cut off above the mud line will be fitted with jackets to provide habitat structure. Place up to 200 cubic yards of new riprap in an area approximately 25-feet wide and 135-feet long, on the shoreline below the SHW, to stabilize the new bank slope. Construct a breakwater below the plane of MLW, approximately 12-feet wide and 170-feet long, from approximately seventy square concrete blocks, each approximately four feet in size on each side (165 cubic yards total). Install up to a total of ten pre-cast concrete tidal pools, each approximately four-feet wide by three and one-half feet long, at the plane of MHW to provide habitat structure in the intertidal zone.

Flyover Bridge (see sheets 4, and 52-55)
Construct two new bridge piers seaward of the SHW (piers 5 and 6), each consisting of two (2) five-feet diameter steel support shafts filled with approximately 12 cubic yards of cast-in-place concrete below SHW. Install two (2) five foot diameter steel support shafts filled with approximately 7 cubic yards of cast-in-place concrete below SHW and twenty (20) three-feet diameter steel support shafts each filled with approximately 4 cubic yards of cast-in-place concrete to support the north bridge approach. The new flyover bridge shafts will be installed through and connect to the existing concrete promenade deck and bulkhead using barge mounted drill rigs, and result in total impacts to approximately 260-square feet, with up to 1,008 cubic yards of fill placed below the plane of SHW. The new flyover bridge structure will be placed seaward of the plane of MHW; however, will not extend seaward of the existing promenade deck.

Sewer Outfalls and Cofferdams (see sheets 42-51)
Relocate and reconstruct ten (10) existing sewer outfalls at different locations along the length of the project area. The new outfalls will be installed through the face of the new cut-off wall and vary in size, with openings between five-feet and 12-feet wide. Temporary cofferdams will be installed during construction at each new outfall location, landward of the pierhead line, and result in temporary impacts to approximately 1,000 square feet of WOTUS. Existing outfalls will be removed and covered by the new cut-off wall.

Fireboat House/Platform (see sheets 6, 23, and 59-62)
Using divers, install approximately 120-linear feet of new stay-in-place formwork into a two-feet deep trench underneath the existing platform, extending approximately 20-feet seaward of the existing bulkhead, to form a closed, irregularly shaped rectangular cell. Backfill the newly enclosed area between the new formwork and the existing bulkhead, approximately 20-feet wide and 70-feet long (1,600 square feet), with approximately 235 cubic yards of lean concrete. Encase a total of 35 existing, degraded, 12-inch diameter timber piles underneath the existing

platform seaward of the fill area, with a composite jacket filled with epoxy grout in order to stabilize the existing platform.

Temporary Dewatering
Cofferdams will be installed to dewater the work areas during construction of each new outfall. Turbidity curtains will be installed in the East River prior to demolition of the existing East River bulkhead and esplanade in order to contain debris and turbidity.

All work shall be performed in accordance with the attached drawings entitled "East Side Coastal Resiliency Project", prepared for the New York City Department of Design and Construction, dated November 15, 2019, and special conditions (A) through (Q) which are hereby made part of this permit, and the New York State Department of Environmental Conservation Permit No. 2-6206-01582/00002, dated October 20, 2020, incorporating the Section 401 Water Quality Certificate, which are hereby made a part of this permit.

Project Location: **IN: East River**

AT: Montgomery Street to East 25th Street, Borough of Manhattan, City of New York, New York County, New York.

Permit Conditions:

General Conditions:

1. The time limit for completing the work authorized ends on October 19, 2030.
If you find that you need more time to complete the authorized activity, submit your request for a time extension to this office for consideration at least one month before the above date is reached.

2. You must maintain the activity authorized by this permit in good condition and in conformance with the terms and conditions of this permit. You are not relieved of this requirement if you abandon the permitted activity, although you may make a good faith transfer to a third party in compliance with General Condition 4 below. Should you wish to cease to maintain the authorized activity or should you desire to abandon it without a good faith transfer, you must obtain a modification of this permit from this office, which may require restoration of the area.

3. If you discover any previously unknown historic or archeological remains while accomplishing the activity authorized by this permit, you must immediately notify this office of what you have found. We will initiate the Federal and state coordination required to determine if the remains warrant a recovery effort or if the site is eligible for listing in the National Register of Historic Places.

4. If you sell the property associated with this permit, you must obtain the signature of the new owner in the space provided and forward a copy of the permit to this office to validate the transfer of this authorization.

5. If a conditioned water quality certification has been issued for your project, you must comply with the conditions specified in the certification as special conditions to this permit. For your convenience, a copy of the certification is attached if it contains such conditions.

6. You must allow representatives from this office to inspect the authorized activity at any time deemed necessary to ensure that it is being or has been accomplished in accordance with the terms and conditions of your permit.

Special Conditions:

(A) This authorization is conditional on the applicant's receipt of the required Section 401 Water Quality Certification or waiver from the New York State Department of Environmental Quality (NYSDEC). No work may be accomplished until the required approval from NYSDEC has been obtained. Once obtained, the permittee, and their agents, shall be responsible for complying with any special conditions and/or stipulations incorporated into the appropriate Section 401 Water Quality Certification, and all amendments thereto.

(B) The permittee, and their agents, shall avoid installing cofferdams within winter flounder early life stage Essential Fish Habitat between January 15 and May 31 of any year to minimize impacts to winter flounder eggs and larvae.

(C) The permittee, and their agents, shall ensure when pile driving activities occur during a time of year when ESA-listed species may be present, a vibratory hammer shall be used to the extent practicable. If an impact hammer is used, 20-minute "soft starts" shall be performed, and a wooden block shall be used to buffer the noise and vibrations during hammering.

(D) The permittee, and their agents, shall ensure cofferdams, turbidity curtains, or other methods to control turbidity are utilized when operationally feasible and ESA-listed species may be present.

(E) The permittee, and their agents, shall ensure the Section 106 Programmatic Agreement dated December 5, 2019, is adhered to.

(F) The permittee shall provide this office with a copy of all documents and correspondence required to carry out the Section 106 Programmatic Agreement dated December 5, 2019, also including the Phase 1B Archeological Report, once completed.

(G) The permittee, and their agents, shall ensure any vessels used in conjunction with this project comply with the Port of New York anchorage ground regulations codified at 33 CFR 110.155, including paragraph (1)(11) regarding vessels that impede or

obstruct vessel movements.

(H) The Permittee, and their agents, shall, a minimum of 14-days prior to starting operations, submit the following information to the First Coast Guard District for publication in the Local Notice to Mariners by email at LNM@uscg.mil, or faxed to (617) 223-8291):

Date of submission; Name, phone number, and email address of project point of contact; Company Name; Type of Work; Waterway and location where work will be done; Latitude & Longitude of work area (Degrees, Minutes, Thousandths of seconds); Work Start & Stop dates and Hours of Operation; Equipment on scene; Passing Arrangements / Time to move vessels to not impede navigation; VHF Radio Channel monitored; Disposal Site (if used); NOAA Chart Number for the area.

(I) The Permittee, and their agents shall check in with U.S. Coast Guard Sector New York Vessel Traffic Service (VTSNY) on VHF CH 12 or at (718) 354-4195 each day, fifteen minutes before starting, and upon completion, of diving operations.

(J) The permittee, and their agents, shall email U.S. Coast Guard Sector New York [Jeffrey.M.Yunker@uscg.mil] each request to moor two or more barges abreast or moor any single barge perpendicular to the federal channel at any time during the project for review with VTSNY. Construction barges may be required to move with advance notice depending on the location and combined beam of the moored vessels.

(K) The permittee, and their agents, shall email U.S. Coast Guard Sector New York [Jeffrey.M.Yunker@uscg.mil] the as-built coordinates for the center of each of the ten relocated sewer outfalls.

(L) The permittee, and their agents, shall notify the National Oceanic and Atmospheric Administration of the project completion and specifications so they may initiate the appropriate chart and Coast Pilot corrections. This notification must be submitted online at https://nauticalcharts.noaa.gov/charts/docs/charts-updates/Permit-Public-Notice.pdf and include a copy of the USACE permit.

(M) The permittee, and their agents, shall ensure any current, or future, outdoor lighting is located or shielded so that it is not confused with any aids to navigation and does not interfere with navigation on the adjacent waterway. If installed, the lights must be white and non-flashing.

(N) The permittee shall ensure all soil and sediment management during in-water construction adheres to a Mitigation Work Plan (MWP) approved by the New York Stated Department of Environmental Conservation (NYSDEC), and/or shall complete any sediment testing requirements, as required by the NYSDEC, prior to the start of any in-water work within the project area. A copy of any changes to the MWP, and any reports resulting from additional soil testing, shall be provided to the U.S. Army

Corps of Engineers, Regulatory Branch.

(O) The permittee, and their agents, shall conduct all in-water work within the confines of a turbidity curtain and oil booms to contain soil and suspended sediments. Additionally, the permittee shall use other Best Management Practices to ensure turbidity is minimized in the water.

(P) The permittee understands and agrees that, if future operations by the United States require the removal, relocation, or other alteration, of the structure or work herein authorized, or if, in the opinion of the Secretary of the Army or his authorized representative, said structure or work shall cause unreasonable obstruction to the free navigation of the navigable waters, the permittee will be required, upon due notice from the Corps of Engineers, to remove, relocate, or alter the structural work or obstructions caused thereby, without expense to the United States. No claim shall be made against the United States on account of any such removal or alteration.

(Q) The permittee shall utilize best management practices to minimize turbidity during all in-water work activities as well as prevent construction materials, including debris, from entering any waterway to become drift or pollution hazards.

Further Information:

1. Congressional Authorities: You have been authorized to undertake the activity described above pursuant to:

(X) Section 10 of the Rivers and Harbors Act of 1899 (33 U.S. Code 403).

(X) Section 404 of the Clean Water Act (33 U.S. Code 1344).

( ) Section 103 of the Marine Protection, Research and Sanctuaries Act of 1972 (33 U.S.C. 1413).

2. Limits of this authorization:

a. This permit does not obviate the need to obtain other Federal, state, or local authorizations required by law.

b. This permit does not grant any property rights or exclusive privileges.

c. This permit does not authorize any injury to the property or rights of others.

d. This permit does not authorize interference with any existing or proposed Federal project.

3. Limits of Federal Liability: In issuing this permit, the Federal Government does not assume any liability for the following:

a. Damages to the permitted project or uses thereof as a result of other permitted or unpermitted activities or from natural causes.

b. Damages to the permitted project or uses thereof as a result of current or future activities undertaken by or on behalf of the United States in the public interest.

c. Damages to persons, property, or to other permitted or unpermitted activities or structures caused by the activity authorized by this permit.

d. Design or construction deficiencies associated with the permitted work.

e. Damage claims associated with any future modification, suspension, or revocation of this permit.

4. Reliance on Applicant's Data: The determination of this office that issuance of this permit is not contrary to the public interest was made in reliance on the information you provided.

5. Reevaluation of Permit Decision: This office may reevaluate its decision on this permit at any time the circumstances warrant. Circumstances that could require a reevaluation include, but are not limited to, the following:

a. You fail to comply with the terms and conditions of this permit.

b. The information provided by you in support of your permit application proves to have been false, incomplete, or inaccurate (See 4 above).

c. Significant new information surfaces which this office did not consider in reaching the original public interest decision.

Such a reevaluation may result in a determination that it is appropriate to use the suspension, modification, and revocation procedures contained in 33 CFR 325.7 or enforcement procedures such as those contained in 33 CFR 326.4 and 326.5. The referenced enforcement procedures provide for the issuance of an administrative order requiring you to comply with the terms and conditions of your permit and for the initiation of legal action where appropriate. You will be required to pay for any corrective measures ordered by this office, and if you fail to comply with such directive, this office may in certain situations (such as those specified in 33 CFR 209.170) accomplish the corrective measures by contract or otherwise and bill you for the cost.

6. Extensions: General Condition 1 establishes a time limit for the completion of the activity authorized by this permit. Unless there are circumstances requiring either a prompt completion of the authorized activity or a reevaluation of the public interest decision, the Corps will normally give favorable consideration to a request for an extension of this time limit.

Your signature below, as permittee, indicates that you accept and agree to comply with the terms

PERMITTEE: New York City Department of Design and Construction
PERMIT NO.: NAN-2019-00596

and conditions of this permit.



11/17/20

(PERMITTEE) **(DATE)**

Eric C Macfarlane, P.E. NYCDDC Deputy Commissioner
For and In Behalf of,
Judith Coriolan
Executive Director, Safety & Site Support Division
New York City Department of Design and Construction

This permit becomes effective when the Federal official, designated to act for the Secretary of the Army, has signed below.

RYBA.STEPHAN.A.1375342223 Digitally signed by RYBA.STEPHAN.A.1375342223 Date: 2020.12.02 11:53:36 -05'00'

December 2, 2020

(COMMANDER AND DISTRICT ENGINEER) **(DATE)**

For and In Behalf Of

Matthew W. Luzzatto
Colonel, U.S. Army
Commander and District Engineer

When the structures or work authorized by this permit are still in existence at the time the property is transferred, the terms and conditions of this permit will continue to be binding on the new owner(s) of the property. To validate the transfer of this permit and the associated liabilities associated with compliance with its terms and conditions, have the transferee sign and date below. A copy of the permit signed by the transferee should be sent to this office.

(TRANSFEREE) **(DATE)**

PERMIT
Under the Environmental Conservation Law (ECL)

Permittee and Facility Information

Permit Issued To:
NYC DEPT OF DESIGN & CONSTRUCTION
30-30 THOMSON AVE FL 5

LONG ISLAND CITY, NY 11101-3045
(718) 391-2283

NYC DEPT OF PARKS & RECREATION
830 5TH AVE
NEW YORK, NY 10065-7001

Facility:
NYCDDC - East Side Coastal Resiliency
E Side Waterfront btw Montgomery St & E 25th St
Manhattan, NY 10002

Facility Location: in NEW YORK COUNTY **Village:** Manhattan
Facility Principal Reference Point: NYTM-E: 586.47 NYTM-N: 4507.386
Latitude: 40°42'46.3" Longitude: 73°58'34.6"
Project Location: 2.4 miles of East River waterfront between Montgomery St and E 25th St
Authorized Activity: Undertake a resiliency project along the East River waterfront, which includes components within the Department's jurisdiction, including demolishing the existing bulkhead and reconstructing it in place with a 8 foot elevated grade change, filling the existing embayments and creating two new embayments, reconstructing 10 sewer outfalls, stabilization of the Fireboat House platform through pile encasement, and installation of 26 support shafts for a flyover bridge over FDR Dr between E 13th and E 15th Sts, all resulting in a net increase of 2195 cubic yds of fill for which mitigation will occur.

Permit Authorizations

Tidal Wetlands - Under Article 25
Permit ID 2-6206-01582/00001
New Permit Effective Date: 10/20/2020 Expiration Date: 10/19/2030
Water Quality Certification - Under Section 401 - Clean Water Act
Permit ID 2-6206-01582/00002
New Permit Effective Date: 10/20/2020 Expiration Date: 10/19/2030
Excavation & Fill in Navigable Waters - Under Article 15, Title 5
Permit ID 2-6206-01582/00003
New Permit Effective Date: 10/20/2020 Expiration Date: 10/19/2030

NYSDEC Approval

By acceptance of this permit, the permittee agrees that the permit is contingent upon strict compliance with the ECL, all applicable regulations, and all conditions included as part of this permit.

Permit Administrator: STEPHEN A WATTS, Regional Permit Administrator
Address: NYSDEC Region 2 Headquarters
47-40 21st St
Long Island City, NY 11101 -5401

Authorized Signature: _____ Stephen A Watts III Digitally signed by Stephen A Watts III Date: 2020.10.27 18:24:59 -04'00' Date _10 /_20_/_2020_

Permit Components

NATURAL RESOURCE PERMIT CONDITIONS

WATER QUALITY CERTIFICATION SPECIFIC CONDITION

GENERAL CONDITIONS, APPLY TO ALL AUTHORIZED PERMITS

NOTIFICATION OF OTHER PERMITTEE OBLIGATIONS

NATURAL RESOURCE PERMIT CONDITIONS - Apply to the Following Permits: TIDAL WETLANDS; WATER QUALITY CERTIFICATION; EXCAVATION & FILL IN NAVIGABLE WATERS

1. Conformance With Plans All activities authorized by this permit must be in strict conformance with the approved plans submitted by the applicant or applicant's agent as part of the permit application. Such approved plans were prepared by the entities described and cited in Natural Resources permit condition 2.

2. Conformance with Plans - Addenda
Documents from the resubmission prepared by NYCDDC titled “Response to NYSDEC Notice of Incomplete Application (Dated October 1, 2019),” all received by NYSDEC November 18, 2019, as follows:

1. Enclosure 2, “Response to NYSDEC Notice of Incomplete Application: November 15, 2019."
2. Letter from Eram Quadri of NYCOMB to Karen Greene of NOAA National Marine Fisheries Service, dated September 4, 2019.
3. Letter from Eram Quadri of NYCOMB to Dr. Michael J. Asaro of NOAA’s National Marine

Fisheries Service, page 5, dated May 13, 2019.

4. Enclosure 5, "Revised Attachment 2 – Project Description," dated November 15, 2019, received by NYSDEC 11/18/2019.

5. Plans prepared by NYC Department of Design and Construction, titled 'East Side Coastal Resiliency Project', Revision 1, Sheets 1-62 of 66, dated November 15, 2019.

6. Enclosure 1, "Response to Request for Additional Justification for Fire Boat House Encasement of Support Piles," dated April 2, 2020, received by NYSDEC by email on April 6, 2020.

7. Email from NYCDDC to NYSDEC regarding "SANDRESM1 - ESCR – JPA comment on cofferdam," dated April 12, 2020, received by NYSDEC April 13, 2020.

3. Notice of Intent to Commence Work At least five (5) days prior to the start of work. Permittee must complete and submit the attached "Notice of Intent to Commence Work" form to the NYSDEC Division of Marine Resources, 47-40 21st Street, Long Island City, New York 11101.

4. Notice of Completion of Work Within ten (10) days of the completion of work, Permittee must complete and submit the attached Notice of Completion of Work form to NYSDEC Division of Marine Resources, 47-40 21st Street, Long Island City, New York 11101.

5. Mitigation Plan within 90 Days of Permit Issuance Within 90 days of the issuance of this permit, Permittee must submit verifying documentation that the 2,195 cubic yards of fill placement below mean high water will be offset through the purchase of an approvable quantity of credits from the Saw Mill Creek Wetland Mitigation Bank.

If the Permittee is unable to purchase the above-referenced credits, a traditional mitigation plan will be required. This plan must be submitted to NYSDEC for review and approval within 120 days of permit issuance. This mitigation plan must account for the proposed placement of 2,195 cubic yards of fill placement below mean high water within tidal wetlands and/or navigable waters at a 2:1 ratio. Any comments resulting from NYSDEC review must be responded to and addressed with a revised mitigation plan within two weeks of receipt of said comments. All correspondence must be submitted to NYSDEC Division of Marine Resources 47-40 21st Street, Long Island City, New York 11101 (Attention: Caitlin Frame).

6. Cofferdam Construction Work Window Installation of cofferdams is prohibited from January 15 through May 31 of any calendar year to minimize impacts to winter flounder eggs and larvae.

7. Concrete or Leachate Must Not Be Discharged During construction, concrete or leachate will not escape or be discharged, nor will washings from transit mix trucks, mixers, or other devices enter tidal wetlands and or protected buffer areas.

8. Erosion/Sediment Control All areas of soil disturbance resulting from this project will be stabilized immediately following project completion or prior to permit expiration, whichever comes first. The approved methodologies are as follows:
A. stabilization of the entire disturbed area with appropriate vegetation (grasses, etc.)

B. stabilized as per specifications identified on approved plans.

C. temporarily stabilized with straw or hay mulch or jute matting or other similar natural fiber matting within 1 week of final grading. Temporary stabilization will be maintained until a mature vegetative cover is established.

9. Clean Fill Material Only All fill will consist of clean sand, gravel, or soil. The use of material such as asphalt, slag, fly-ash, recycled concrete aggregate (RCA), broken concrete, or demolition debris is strictly prohibited.

10. Construct Bulkhead Prior to Fill Placement All peripheral berms, cofferdams, rock revetments, seawalls, gabions, bulkheads, etc. will be completed prior to placement of any fill material behind such structures.

11. Excavate Backfill Prior to Removal of Bulkhead Prior to any construction or removal of bulkheads and other shoreline stabilization structures all backfill will be excavated landward of the bulkhead and retained so as not to enter the waterway, tidal wetland or protected buffer area.

12. Demolition and Construction Debris Should any demolition or construction debris fall into the waterway or enter the tidal wetlands, it must be removed immediately.

13. Disposal of Demolition and Construction Debris All demolition and construction debris must be properly disposed of at a licensed facility.

14. Wood Preservatives

A. Pressure treated wood used for construction of in-water structures must have been treated with a preservative and must have undergone a treatment process approved (stamped or otherwise marked as certified) by the American Wood Preservative Association.

B. Wood treated with Pentachlorophenol (PCP) must not be used in wetlands or surface waters.

C. The use of creosote treated wood is prohibited both in the water and in the upland areas.

D. Chromated Copper Arsenate (CCA) pressure treated wood must be clean and free of CCA surface deposits. Wood with surface deposits must be washed for at least 5 minutes under running water prior to use. (Note the following condition for the handling of wash water.)

E. Any wood debris such as sawdust or wash water must not enter any water body, including wetlands, or protected buffer areas.

15. Combined Best Management Practices Best management practices will be employed to prevent the loss of construction materials, debris and sediments from entering the wetlands or waterways. Such practices may include, but are not limited to construction fencing, staked hay bales, silt fencing, floating platforms, floating booms, netting, containment booms and turbidity curtains.

16. No Interference With Navigation There shall be no unreasonable interference with navigation by the work herein authorized.

17. State Not Liable for Damage The State of New York shall in no case be liable for any damage or injury to the structure or work herein authorized which may be caused by or result from future operations undertaken by the State for the conservation or improvement of navigation, or for other

purposes, and no claim or right to compensation shall accrue from any such damage.

18. **Precautions Against Contamination of Waters** All necessary precautions shall be taken to preclude contamination of any wetland or waterway by suspended solids, sediments, fuels, solvents, lubricants, epoxy coatings, paints, concrete, leachate or any other environmentally deleterious materials associated with the project.

19. **State May Require Site Restoration** If upon the expiration or revocation of this permit, the project hereby authorized has not been completed, the applicant shall, without expense to the State, and to such extent and in such time and manner as the Department of Environmental Conservation may lawfully require, remove all or any portion of the uncompleted structure or fill and restore the site to its former condition. No claim shall be made against the State of New York on account of any such removal or alteration.

20. **State May Order Removal or Alteration of Work** If future operations by the State of New York require an alteration in the position of the structure or work herein authorized, or if, in the opinion of the Department of Environmental Conservation it shall cause unreasonable obstruction to the free navigation of said waters or flood flows or endanger the health, safety or welfare of the people of the State, or cause loss or destruction of the natural resources of the State, the owner may be ordered by the Department to remove or alter the structural work, obstructions, or hazards caused thereby without expense to the State, and if, upon the expiration or revocation of this permit, the structure, fill, excavation, or other modification of the watercourse hereby authorized shall not be completed, the owners, shall, without expense to the State, and to such extent and in such time and manner as the Department of Environmental Conservation may require, remove all or any portion of the uncompleted structure or fill and restore to its former condition the navigable and flood capacity of the watercourse. No claim shall be made against the State of New York on account of any such removal or alteration.

WATER QUALITY CERTIFICATION SPECIFIC CONDITIONS

1. **Water Quality Certification** The authorized project, as conditioned pursuant to the Certificate, complies with Section 301, 302, 303, 306, and 307 of the Federal Water Pollution Control Act, as amended and as implemented by the limitations, standards, and criteria of state statutory and regulatory requirements set forth in 6 NYCRR Section 608.9(a). The authorized project, as conditioned, will also comply with applicable New York State water quality standards, including but not limited to effluent limitations, best usages and thermal discharge criteria, as applicable, as set forth in 6 NYCRR Parts 701, 702, 703, and 704.

GENERAL CONDITIONS - Apply to ALL Authorized Permits:

1. **Facility Inspection by The Department** The permitted site or facility, including relevant records, is subject to inspection at reasonable hours and intervals by an authorized representative of the Department of Environmental Conservation (the Department) to determine whether the permittee is complying with this permit and the ECL. Such representative may order the work suspended pursuant to ECL 71- 0301 and SAPA 401(3).

The permittee shall provide a person to accompany the Department's representative during an inspection to the permit area when requested by the Department.

A copy of this permit, including all referenced maps, drawings and special conditions, must be available for inspection by the Department at all times at the project site or facility. Failure to produce a copy of the permit upon request by a Department representative is a violation of this permit.

2. Relationship of this Permit to Other Department Orders and Determinations Unless expressly provided for by the Department, issuance of this permit does not modify, supersede or rescind any order or determination previously issued by the Department or any of the terms, conditions or requirements contained in such order or determination.

3. Applications For Permit Renewals, Modifications or Transfers The permittee must submit a separate written application to the Department for permit renewal, modification or transfer of this permit. Such application must include any forms or supplemental information the Department requires. Any renewal, modification or transfer granted by the Department must be in writing. Submission of applications for permit renewal, modification or transfer are to be submitted to:

Regional Permit Administrator
NYSDEC Region 2 Headquarters
47-40 21st St
Long Island City, NY11101 -5401

4. Submission of Renewal Application The permittee must submit a renewal application at least 30 days before permit expiration for the following permit authorizations: Excavation & Fill in Navigable Waters, Tidal Wetlands, Water Quality Certification.

5. Permit Modifications, Suspensions and Revocations by the Department The Department reserves the right to exercise all available authority to modify, suspend or revoke this permit. The grounds for modification, suspension or revocation include:

a. materially false or inaccurate statements in the permit application or supporting papers;

b. failure by the permittee to comply with any terms or conditions of the permit;

c. exceeding the scope of the project as described in the permit application;

d. newly discovered material information or a material change in environmental conditions, relevant technology or applicable law or regulations since the issuance of the existing permit;

e. noncompliance with previously issued permit conditions, orders of the commissioner, any provisions of the Environmental Conservation Law or regulations of the Department related to the permitted activity.

6. Permit Transfer Permits are transferrable unless specifically prohibited by statute, regulation or another permit condition. Applications for permit transfer should be submitted prior to actual transfer of ownership.

NOTIFICATION OF OTHER PERMITTEE OBLIGATIONS

Item A: Permittee Accepts Legal Responsibility and Agrees to Indemnification
The permittee, excepting state or federal agencies, expressly agrees to indemnify and hold harmless the Department of Environmental Conservation of the State of New York, its representatives, employees, and agents ("DEC") for all claims, suits, actions, and damages, to the extent attributable to the permittee's acts or omissions in connection with the permittee's undertaking of activities in connection with, or operation and maintenance of, the facility or facilities authorized by the permit whether in compliance or not in compliance with the terms and conditions of the permit. This indemnification does not extend to any claims, suits, actions, or damages to the extent attributable to DEC's own negligent or intentional acts or omissions, or to any claims, suits, or actions naming the DEC and arising under Article 78 of the New York Civil Practice Laws and Rules or any citizen suit or civil rights provision under federal or state laws.

Item B: Permittee's Contractors to Comply with Permit
The permittee is responsible for informing its independent contractors, employees, agents and assigns of their responsibility to comply with this permit, including all special conditions while acting as the permittee's agent with respect to the permitted activities, and such persons shall be subject to the same sanctions for violations of the Environmental Conservation Law as those prescribed for the permittee.

Item C: Permittee Responsible for Obtaining Other Required Permits
The permittee is responsible for obtaining any other permits, approvals, lands, easements and rights-of-way that may be required to carry out the activities that are authorized by this permit.

Item D: No Right to Trespass or Interfere with Riparian Rights
This permit does not convey to the permittee any right to trespass upon the lands or interfere with the riparian rights of others in order to perform the permitted work nor does it authorize the impairment of any rights, title, or interest in real or personal property held or vested in a person not a party to the permit.

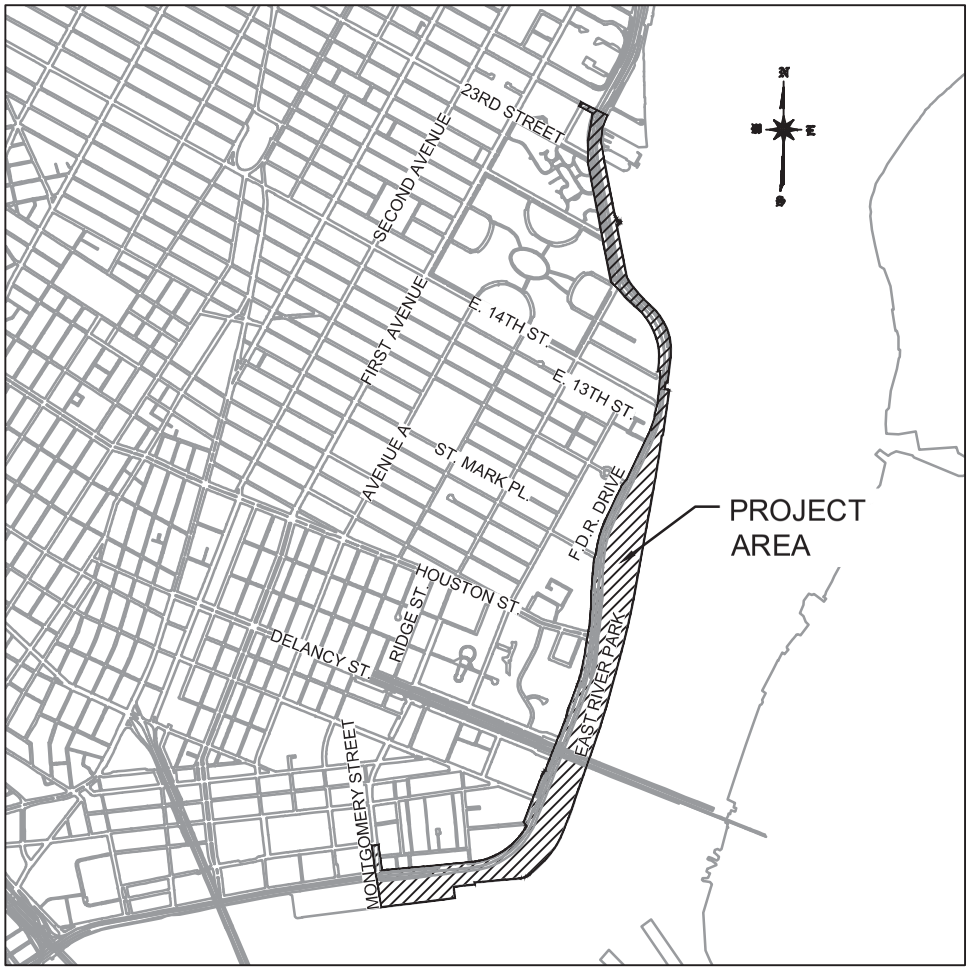

VICINITY MAP
NOT TO SCALE

LEGEND

PROJECT SITE AREA



NEW YORK CITY MAP
NOT TO SCALE



NEW YORK STATE MAP
NOT TO SCALE

OWNER(S):
CITY OF NEW YORK PARKS & RECREATION
OLMSTED CENTER
FLUSHING MEADOWS CORONA PARK
FLUSHING, NEW YORK 11368

IN: EAST RIVER AT: MONTGOMERY STREET TO CAPT. PATRICK J. BROWN WALK

TOWN: NEW YORK STATE: NEW YORK

APPLICATION BY: NYC DEPARTMENT OF DESIGN AND CONSTRUCTION

WATERWAY: EAST RIVER

DATUM: NORTH AMERICAN VERTICAL DATUM 1988 (NAVD88)

EAST SIDE COASTAL RESILIENCY PROJECT

DATE: 11/15/2019 REV.: 1 SHEET NO 1 OF 66

VICINITY MAP

SHEET NUMBER	SHEET TITLE
1	VICINITY MAP
2	TABLE OF CONTENTS
3	KEYMAP SHEET 1
4	KEYMAP SHEET 2
5	ESPLANADE DEMOLITION PLAN - REACH C
6	ESPLANADE DEMOLITION PLAN - REACH D
7	ESPLANADE DEMOLITION PLAN - REACH E
8	ESPLANADE DEMOLITION PLAN - REACH F
9	ESPLANADE DEMOLITION PLAN - REACH G
10	ESPLANADE DEMOLITION PLAN - REACH H
11	ESPLANADE DEMOLITION PLAN - REACH I
12	ESPLANADE DEMOLITION PLAN - REACH J
13	DEMOLITION CROSS SECTION
14	DEMOLITION CROSS SECTION - PROPOSED SOUTH EMBAYMENT
15	DEMOLITION CROSS SECTION
16	DEMOLITION CROSS SECTION
17	DEMOLITION CROSS SECTION - EXISTING SOUTH EMBAYMENT
18	DEMOLITION CROSS SECTION - EXISTING SOUTH EMBAYMENT
19	DEMOLITION CROSS SECTION
20	DEMOLITION CROSS SECTION - PROPOSED NORTH EMBAYMENT
21	DEMOLITION CROSS SECTION - EXISTING NORTH EMBAYMENT
22	ESPLANADE STRUCTURAL PLAN - REACH C
23	ESPLANADE STRUCTURAL PLAN - REACH D
24	ESPLANADE STRUCTURAL PLAN - REACH E
25	ESPLANADE STRUCTURAL PLAN - REACH F
26	ESPLANADE STRUCTURAL PLAN - REACH G
27	ESPLANADE STRUCTURAL PLAN - REACH H
28	ESPLANADE STRUCTURAL PLAN - REACH I
29	ESPLANADE STRUCTURAL PLAN - REACH J
30	PROPOSED CROSS SECTION
31	PROPOSED CROSS SECTION - PROPOSED SOUTH EMBAYMENT
32	PROPOSED CROSS SECTION
33	PROPOSED CROSS SECTION - FILLING OF SOUTH EMBAYMENT
34	PROPOSED CROSS SECTION
35	PROPOSED CROSS SECTION - PROPOSED NORTH EMBAYMENT
36	PROPOSED CROSS SECTION - FILLING OF NORTH EMBAYMENT
37	PROPOSED CROSS SECTION
38	PROPOSED SOUTH EMBAYMENT PLAN
38A	FILLING OF EXISTING SOUTH EMBAYMENT PLAN
39	PROPOSED NORTH EMBAYMENT PLAN
39A	FILLING OF EXISTING NORTH EMBAYMENT PLAN
40	EMBAYMENT TYPICAL DETAILS
41	PILE-SUPPORTED PLATFORM - TYPICAL SECTIONS

SHEET NUMBER	SHEET TITLE
42	OUTFALL NCM-060 (REACH C)
43	OUTFALL NCM-059 (REACH D)
44	OUTFALL NCM-028 (REACH E)
45	OUTFALL NCM-058 (REACH F)
46	OUTFALL NCM-057 (REACH F)
47	OUTFALL NCM-020 (REACH G)
48	OUTFALL NCM-056 (REACH G)
49	OUTFALL NCM-055 (REACH H)
50	OUTFALL NCM-054 (REACH H)
51	OUTFALL NCM-053 (REACH I)
52	FLYOVER BRIDGE PLAN
52A	FLYOVER BRIDGE PLAN - DETAIL
53	FLYOVER BRIDGE SECTIONS
54	FLYOVER BRIDGE CONSTRUCTION DETAILS - PLAN
55	FLYOVER BRIDGE CONSTRUCTION DETAILS - SECTION
56	COFFERDAM AND TURBIDITY CURTAIN - TYPICAL DETAILS
57	TURBIDITY BOOM DETAIL
58	SPUD BARGE TYPICAL DETAILS
59	FIREBOAT HOUSE PILE PLAN
60	FIREBOAT HOUSE TYPICAL SECTION
61	FIREBOAT HOUSE PROPOSED REPAIRS (1 OF 2)
62	FIREBOAT HOUSE PROPOSED REPAIRS (2 OF 2)
63	PROJECT SUMMARY TABLE MEASURED FROM MHHW/SHW (USACE JURISDICTION) (1)
64	PROJECT SUMMARY TABLE MEASURED FROM MHHW/SHW (USACE JURISDICTION) (2)
65	PROJECT SUMMARY TABLE MEASURED FROM MHW (DEC JURISDICTION) (1)
66	PROJECT SUMMARY TABLE MEASURED FROM MHW (DEC JURISDICTION) (2)

OWNER(S):

CITY OF NEW YORK PARKS & RECREATION
OLMSTED CENTER
FLUSHING MEADOWS CORONA PARK
FLUSHING, NEW YORK 11368

IN: EAST RIVER AT: MONTGOMERY STREET TO CAPT. PATRICK J. BROWN WALK
TOWN: NEW YORK STATE: NEW YORK
APPLICATION BY: NYC DEPARTMENT OF DESIGN AND CONSTRUCTION

WATERWAY: EAST RIVER
DATUM: NORTH AMERICAN VERTICAL DATUM 1988 (NAVD88)

EAST SIDE COASTAL RESILIENCY PROJECT

DATE: 11/15/2019 REV.: 1 SHEET NO 2 OF 66

TABLE OF CONTENTS

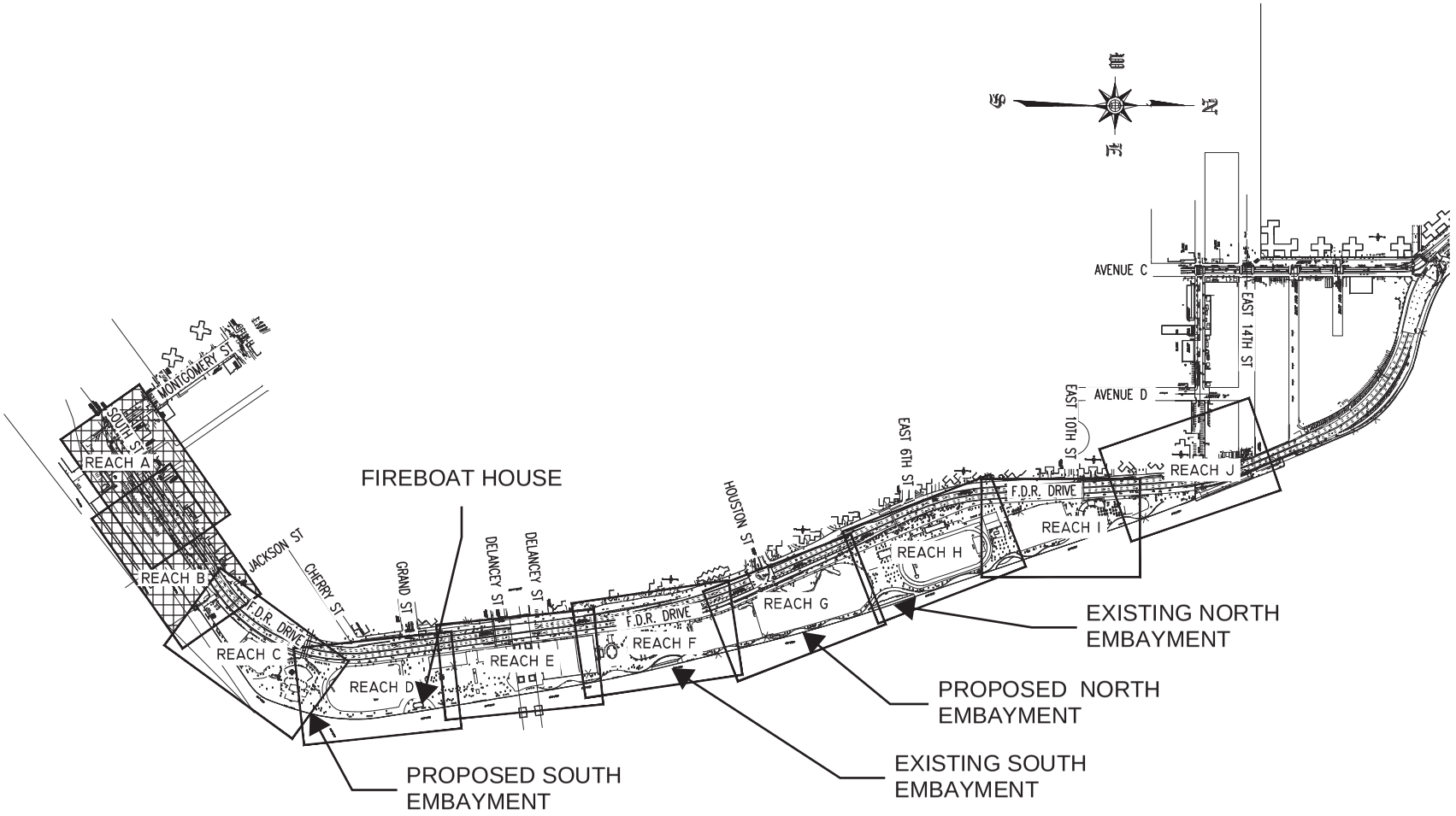

LEGEND

REACH A AND REACH B DO NOT INCLUDE ANY PROPOSED WORK IN JURISDICTIONAL AREAS.

NOTES:

1. SEE SHEETS 63-66 FOR SUMMARY OF PROPOSED WORK.

0 500 1000 2000

OWNER(S):
CITY OF NEW YORK PARKS & RECREATION
OLMSTED CENTER
FLUSHING MEADOWS CORONA PARK
FLUSHING, NEW YORK 11368

IN: EAST RIVER AT: MONTGOMERY STREET TO CAPT. PATRICK J. BROWN WALK
TOWN: NEW YORK STATE: NEW YORK
APPLICATION BY: NYC DEPARTMENT OF DESIGN AND CONSTRUCTION

WATERWAY: EAST RIVER
DATUM: NORTH AMERICAN VERTICAL DATUM 1988 (NAVD88)

EAST SIDE COASTAL RESILIENCY PROJECT

DATE: 11/15/2019 REV.: 1 SHEET NO 3 OF 66

KEYMAP SHEET 1

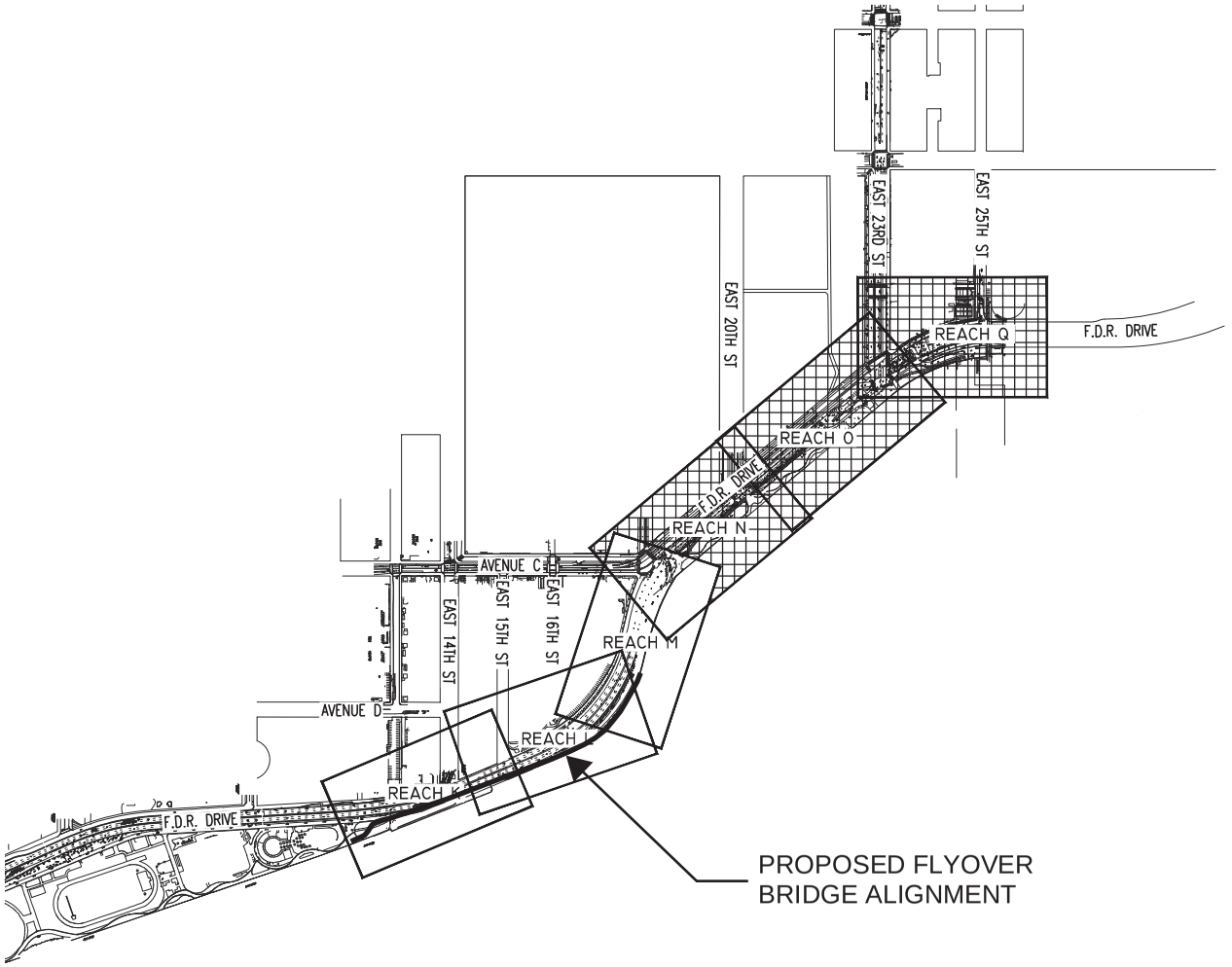

LEGEND

REACH K, REACH N AND REACH Q DO NOT INCLUDE ANY PROPOSED WORK IN JURISDICTIONAL AREAS.

NOTES:

1. SEE SHEETS 63-66 FOR SUMMARY OF PROPOSED WORK.

0 500 1000 2000

OWNER(S):
CITY OF NEW YORK PARKS & RECREATION
OLMSTED CENTER
FLUSHING MEADOWS CORONA PARK
FLUSHING, NEW YORK 11368

IN: EAST RIVER AT: MONTGOMERY STREET TO CAPT. PATRICK J. BROWN WALK
TOWN: NEW YORK STATE: NEW YORK
APPLICATION BY: NYC DEPARTMENT OF DESIGN AND CONSTRUCTION

WATERWAY: EAST RIVER
DATUM: NORTH AMERICAN VERTICAL DATUM 1988 (NAVD88)

EAST SIDE COASTAL RESILIENCY PROJECT

DATE: 11/15/2019 REV.: 1 SHEET NO 4 OF 66

KEYMAP SHEET 2

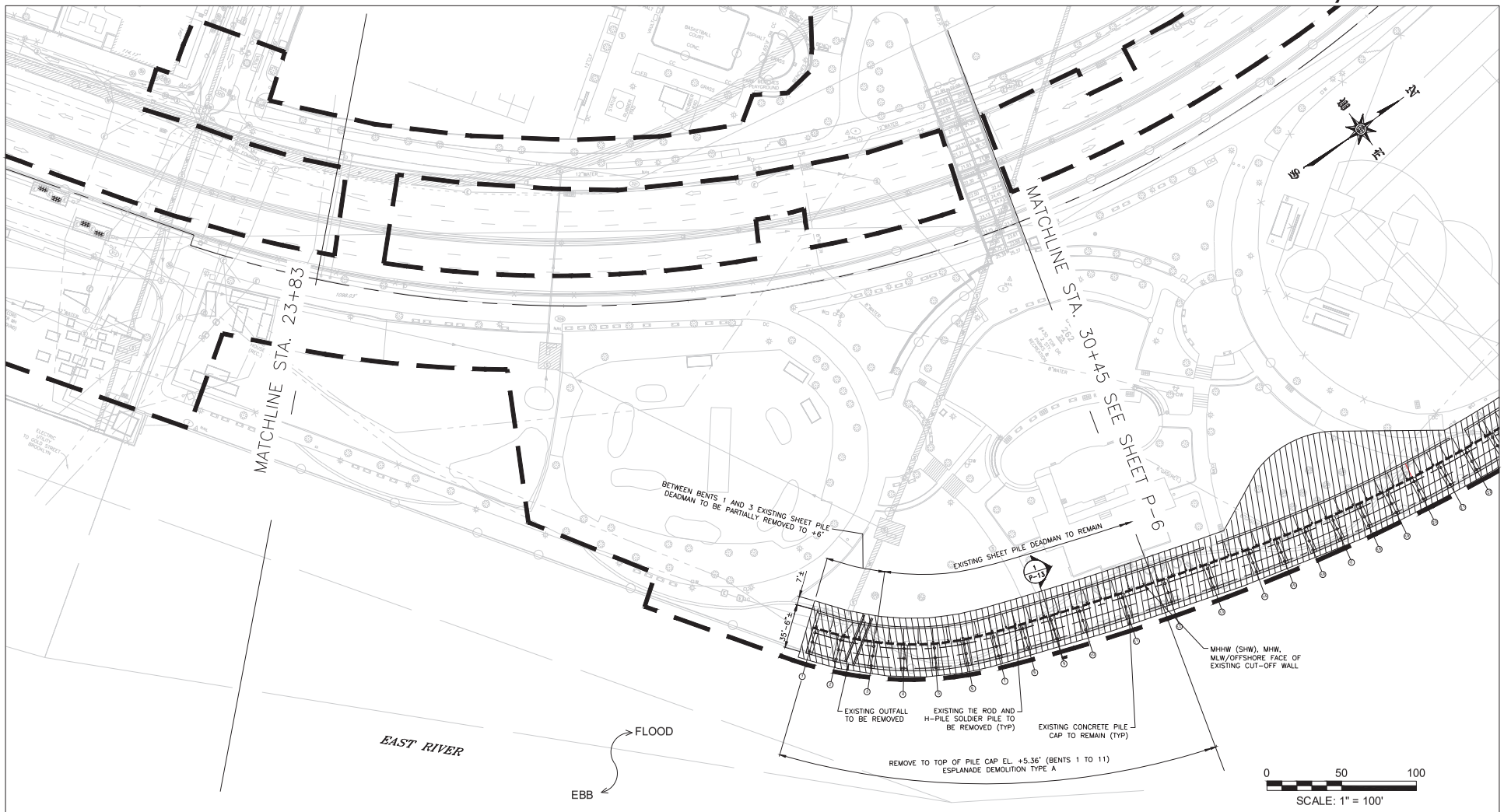

2.28'	MEAN HIGHER HIGH WATER (MHHW) \ SPRING HIGH WATER (SHW)
1.96'	MEAN HIGH WATER (MHW)
0'	NAVD88(1988)
−2.57'	MEAN LOW WATER (MLW)
TIDAL DATA	

LEGEND:

- PROPOSED DEMOLITION
- LIMIT OF WORK
- LIMIT OF TYPICAL TIDAL INFLUENCE (VARIES)

OWNER(S):

CITY OF NEW YORK PARKS & RECREATION
OLMSTED CENTER
FLUSHING MEADOWS CORONA PARK
FLUSHING, NEW YORK 11368

IN: EAST RIVER AT: MONTGOMERY STREET TO CAPT. PATRICK J. BROWN WALK
TOWN: NEW YORK STATE: NEW YORK
APPLICATION BY: NYC DEPARTMENT OF DESIGN AND CONSTRUCTION

WATERWAY:	DATUM:
EAST RIVER	NORTH AMERICAN VERTICAL DATUM 1988 (NAVD88)

EAST SIDE COASTAL RESILIENCY PROJECT

DATE: 11/15/2019	REV.: 1	SHEET NO 5 OF 66

ESPLANADE DEMOLITION PLAN - REACH C

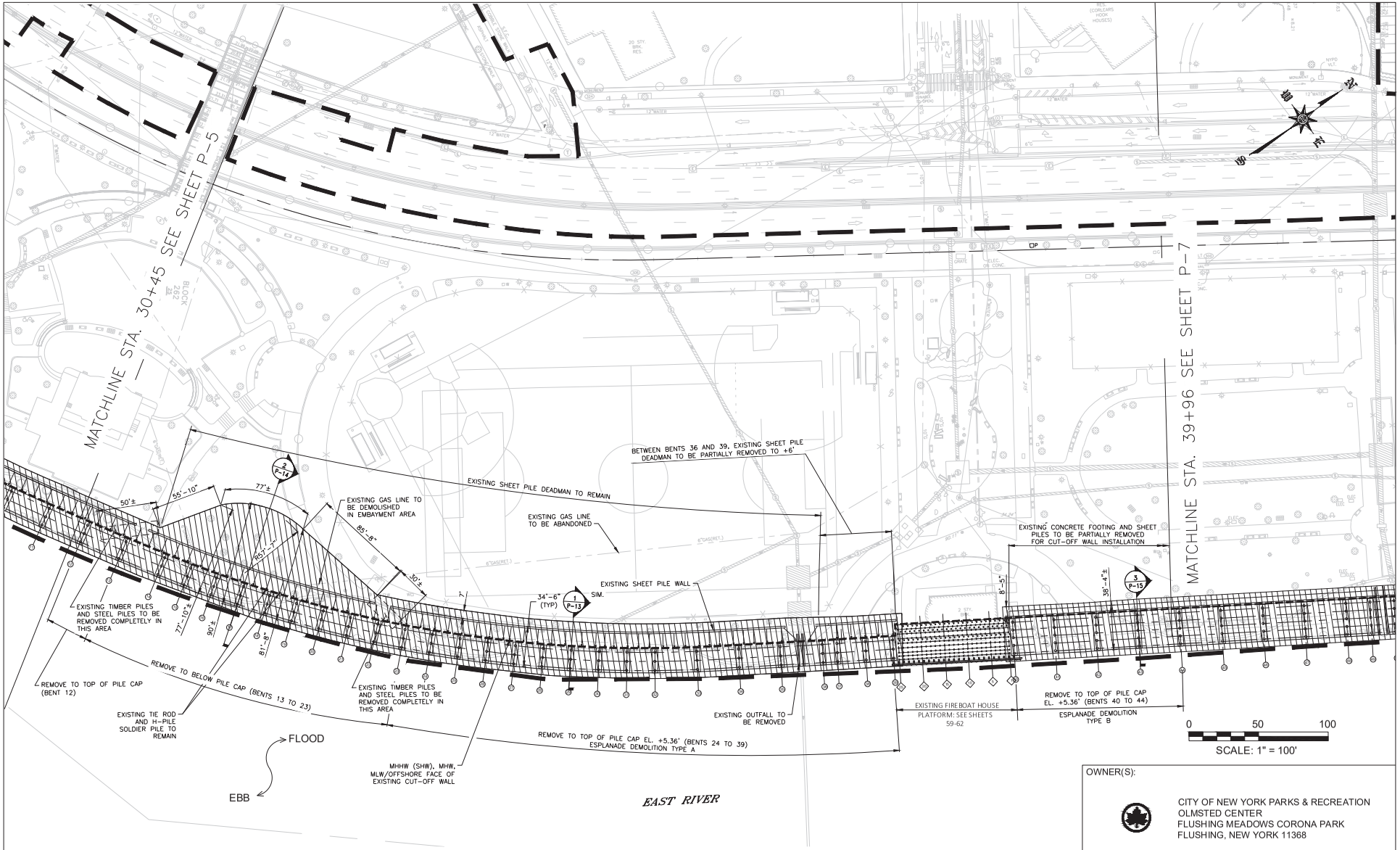

2.28'	MEAN HIGHER HIGH WATER (MHHW) \ SPRING HIGH WATER (SHW)
1.96'	MEAN HIGH WATER (MHW)
0'	NAVD88(1988)
−2.57'	MEAN LOW WATER (MLW)
TIDAL DATA	

LEGEND:

PROPOSED DEMOLITION

LIMIT OF WORK

LIMIT OF TYPICAL TIDAL INFLUENCE (VARIES)

NOTES:

1. SEE SHEETS 63-66 FOR ADDITIONAL DETAILS ON AREA, FILL VOLUME, AND CUT VOLUME ASSOCIATED WITH PROPOSED EMBAYMENT.

OWNER(S):

CITY OF NEW YORK PARKS & RECREATION
OLMSTED CENTER
FLUSHING MEADOWS CORONA PARK
FLUSHING, NEW YORK 11368

IN: EAST RIVER AT: MONTGOMERY STREET TO CAPT. PATRICK J. BROWN WALK
TOWN: NEW YORK STATE: NEW YORK
APPLICATION BY: NYC DEPARTMENT OF DESIGN AND CONSTRUCTION

WATERWAY:	DATUM:
EAST RIVER	NORTH AMERICAN VERTICAL DATUM 1988 (NAVD88)

EAST SIDE COASTAL RESILIENCY PROJECT

DATE: 11/15/2019	REV.: 1	SHEET NO 6 OF 66

ESPLANADE DEMOLITION PLAN - REACH D

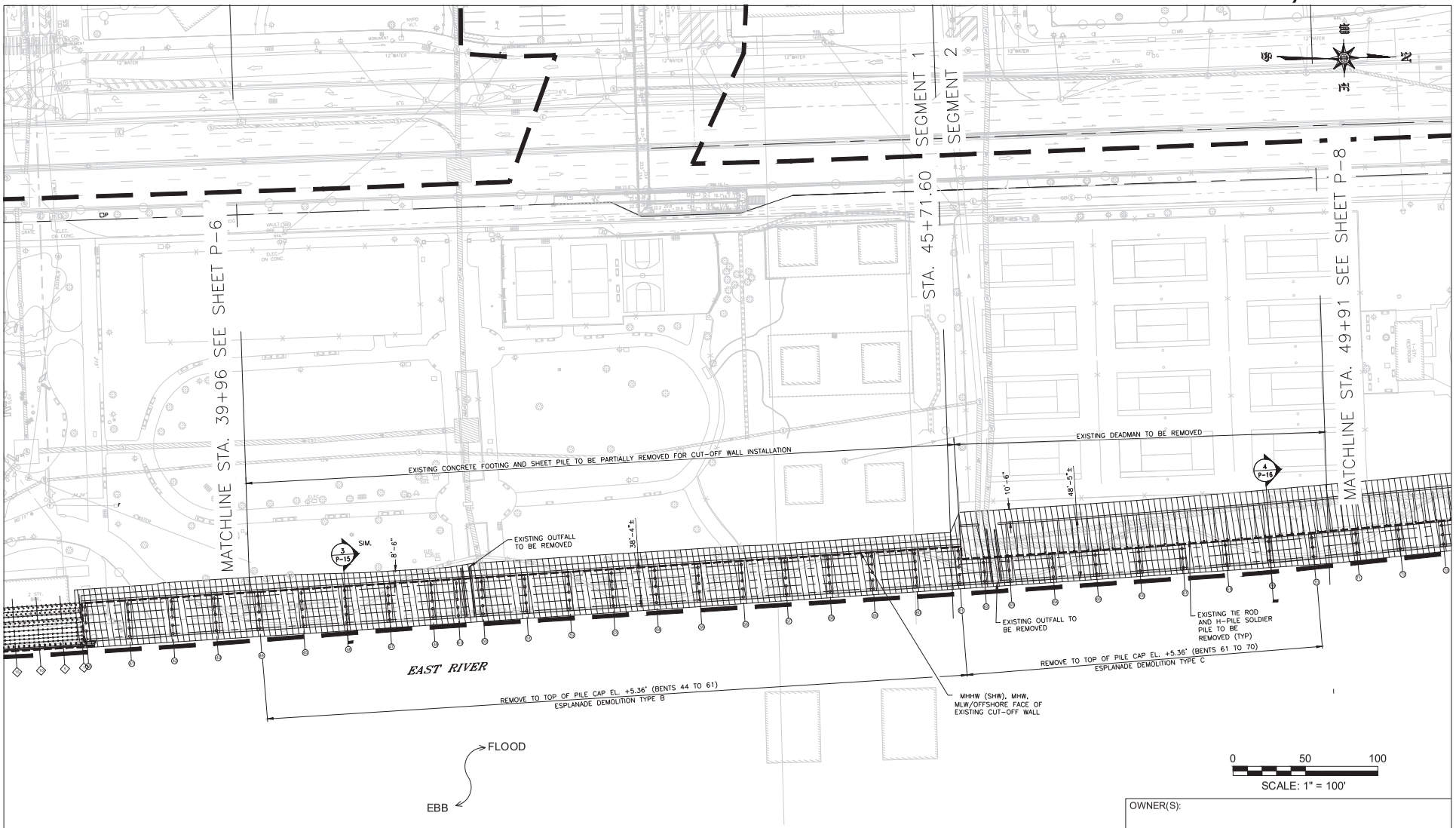

LEGEND:

- PROPOSED DEMOLITION
- LIMIT OF WORK
- LIMIT OF TYPICAL TIDAL INFLUENCE (VARIES)

2.28'	MEAN HIGHER HIGH WATER (MHHW) \ SPRING HIGH WATER (SHW)
1.96'	MEAN HIGH WATER (MHW)
0'	NAVD88(1988)
-2.57'	MEAN LOW WATER (MLW)
TIDAL DATA	

OWNER(S):

CITY OF NEW YORK PARKS & RECREATION
OLMSTED CENTER
FLUSHING MEADOWS CORONA PARK
FLUSHING, NEW YORK 11368

IN: EAST RIVER AT: MONTGOMERY STREET TO CAPT. PATRICK J. BROWN WALK
TOWN: NEW YORK STATE: NEW YORK
APPLICATION BY: NYC DEPARTMENT OF DESIGN AND CONSTRUCTION

WATERWAY:	DATUM:
EAST RIVER	NORTH AMERICAN VERTICAL DATUM 1988 (NAVD88)

EAST SIDE COASTAL RESILIENCY PROJECT

DATE: 11/15/2019	REV.: 1	SHEET NO 7 OF 66

ESPLANADE DEMOLITION PLAN - REACH E

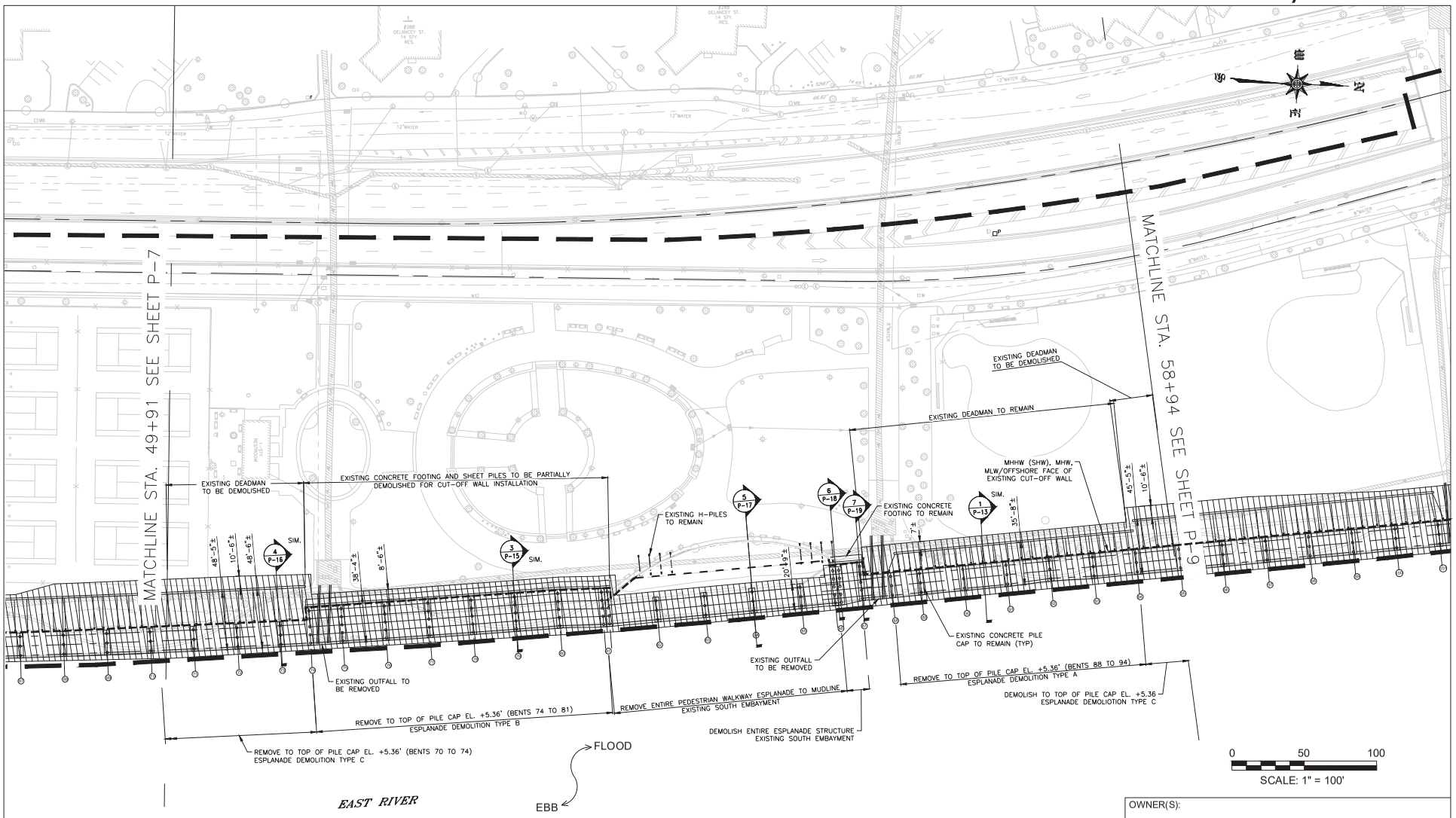

LEGEND:

- PROPOSED DEMOLITION
- LIMIT OF WORK
- LIMIT OF TYPICAL TIDAL INFLUENCE (VARIES)

2.28'	MEAN HIGHER HIGH WATER (MHHW) \ SPRING HIGH WATER (SHW)
1.96'	MEAN HIGH WATER (MHW)
0'	NAVD88(1988)
−2.57'	MEAN LOW WATER (MLW)
TIDAL DATA	

NOTES:

1. SEE SHEETS 63-66 FOR ADDITIONAL DETAILS ON AREA, FILL VOLUME, AND CUT VOLUME ASSOCIATED WITH EXISTING EMBAYMENT.

OWNER(S):

CITY OF NEW YORK PARKS & RECREATION
OLMSTED CENTER
FLUSHING MEADOWS CORONA PARK
FLUSHING, NEW YORK 11368

IN: EAST RIVER AT: MONTGOMERY STREET TO CAPT. PATRICK J. BROWN WALK
TOWN: NEW YORK STATE: NEW YORK
APPLICATION BY: NYC DEPARTMENT OF DESIGN AND CONSTRUCTION

WATERWAY:	DATUM:
EAST RIVER	NORTH AMERICAN VERTICAL DATUM 1988 (NAVD88)

EAST SIDE COASTAL RESILIENCY PROJECT

DATE: 11/15/2019	REV.: 1	SHEET NO 8 OF 66

ESPLANADE DEMOLITION PLAN - REACH F

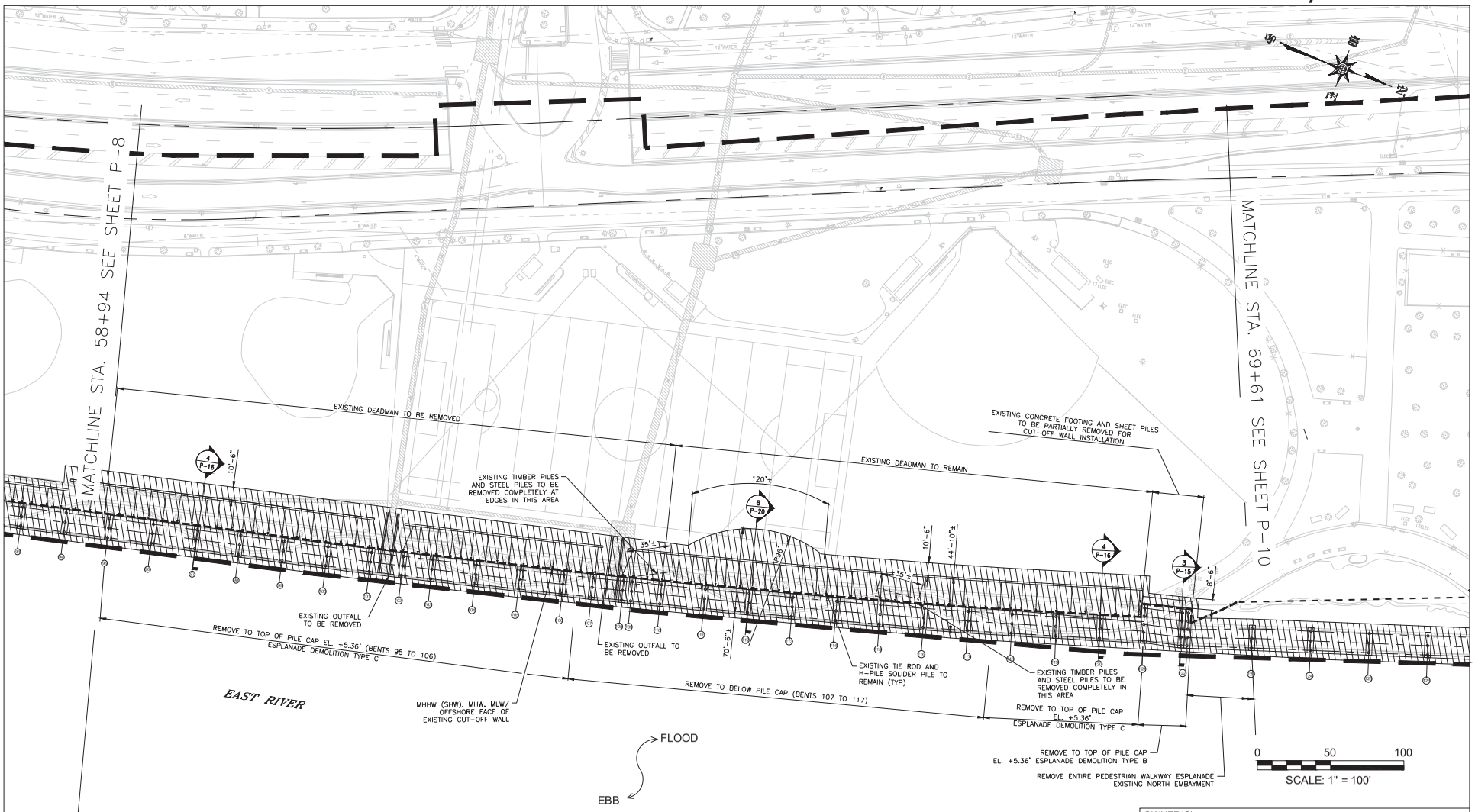

LEGEND:

- PROPOSED DEMOLITION
- LIMIT OF WORK
- LIMIT OF TYPICAL TIDAL INFLUENCE (VARIES)

2.28'	MEAN HIGHER HIGH WATER (MHHW) \ SPRING HIGH WATER (SHW)
1.96'	MEAN HIGH WATER (MHW)
0'	NAVD88(1988)
−2.57'	MEAN LOW WATER (MLW)
TIDAL DATA	

NOTES:

1. SEE SHEETS 63-66 FOR ADDITIONAL DETAILS ON AREA, FILL VOLUME, AND CUT VOLUME ASSOCIATED WITH PROPOSED EMBAYMENT.

OWNER(S):

CITY OF NEW YORK PARKS & RECREATION
OLMSTED CENTER
FLUSHING MEADOWS CORONA PARK
FLUSHING, NEW YORK 11368

IN: EAST RIVER AT: MONTGOMERY STREET TO CAPT. PATRICK J. BROWN WALK
TOWN: NEW YORK STATE: NEW YORK
APPLICATION BY: NYC DEPARTMENT OF DESIGN AND CONSTRUCTION

WATERWAY:	DATUM:
EAST RIVER	NORTH AMERICAN VERTICAL DATUM 1988 (NAVD88)

EAST SIDE COASTAL RESILIENCY PROJECT

DATE: 11/15/2019	REV.: 1	SHEET NO 9 OF 66

ESPLANADE DEMOLITION PLAN - REACH G

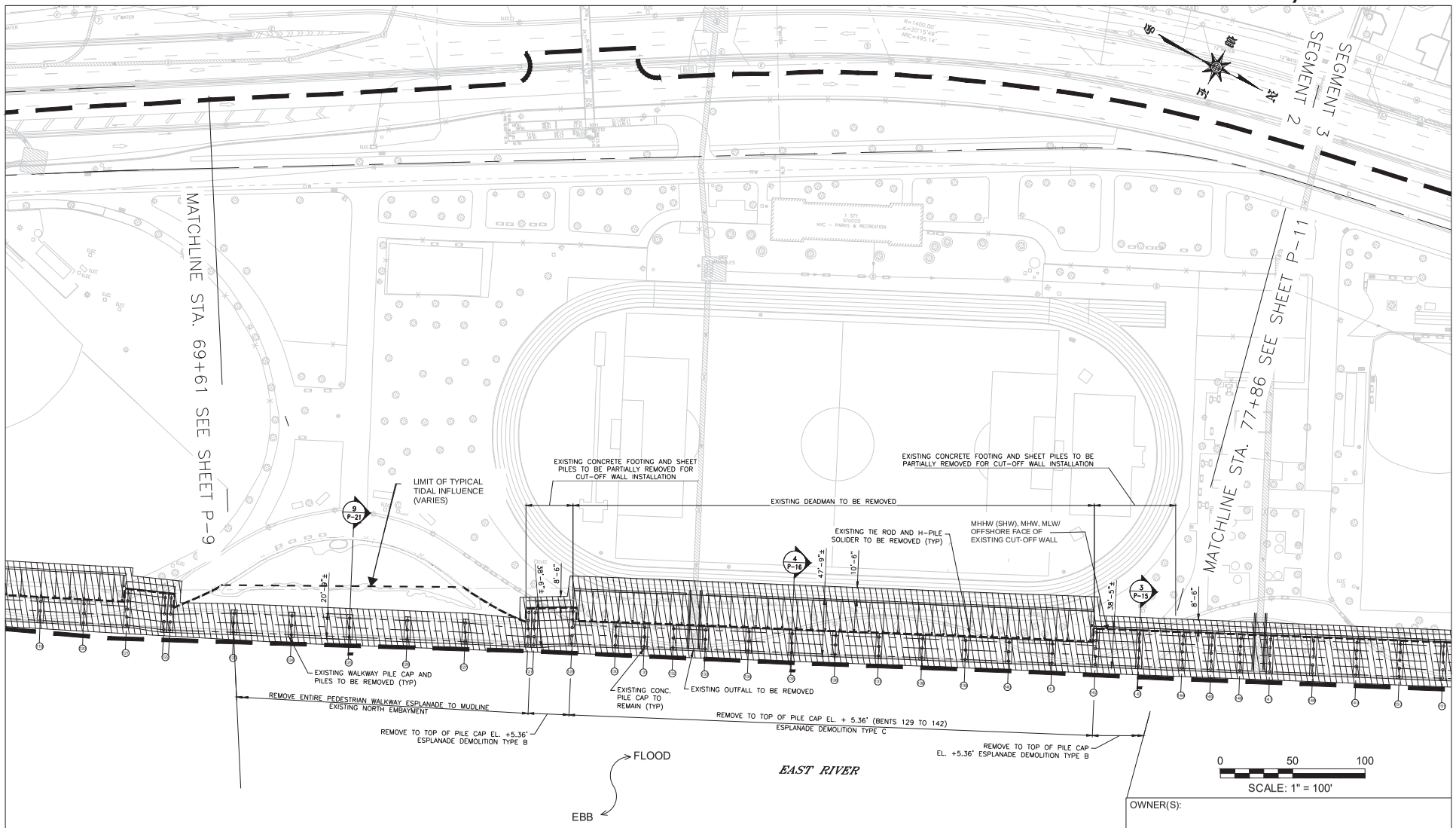

LEGEND:

- PROPOSED DEMOLITION
- LIMIT OF WORK
- LIMIT OF TYPICAL TIDAL INFLUENCE (VARIES)

2.28'	MEAN HIGHER HIGH WATER (MHHW) \ SPRING HIGH WATER (SHW)
1.96'	MEAN HIGH WATER (MHW)
0'	NAVD88(1988)
-2.57'	MEAN LOW WATER (MLW)
TIDAL DATA	

NOTES:

1. SEE SHEETS 63-66 FOR ADDITIONAL DETAILS ON AREA, FILL VOLUME, AND CUT VOLUME ASSOCIATED WITH EXISTING EMBAYMENT.

OWNER(S):

CITY OF NEW YORK PARKS & RECREATION
OLMSTED CENTER
FLUSHING MEADOWS CORONA PARK
FLUSHING, NEW YORK 11368

IN: EAST RIVER AT: MONTGOMERY STREET TO CAPT. PATRICK J. BROWN WALK
TOWN: NEW YORK STATE: NEW YORK
APPLICATION BY: NYC DEPARTMENT OF DESIGN AND CONSTRUCTION

WATERWAY:	DATUM:
EAST RIVER	NORTH AMERICAN VERTICAL DATUM 1988 (NAVD88)

EAST SIDE COASTAL RESILIENCY PROJECT

DATE: 11/15/2019	REV.: 1	SHEET NO 10 OF 66

ESPLANADE DEMOLITION PLAN - REACH H

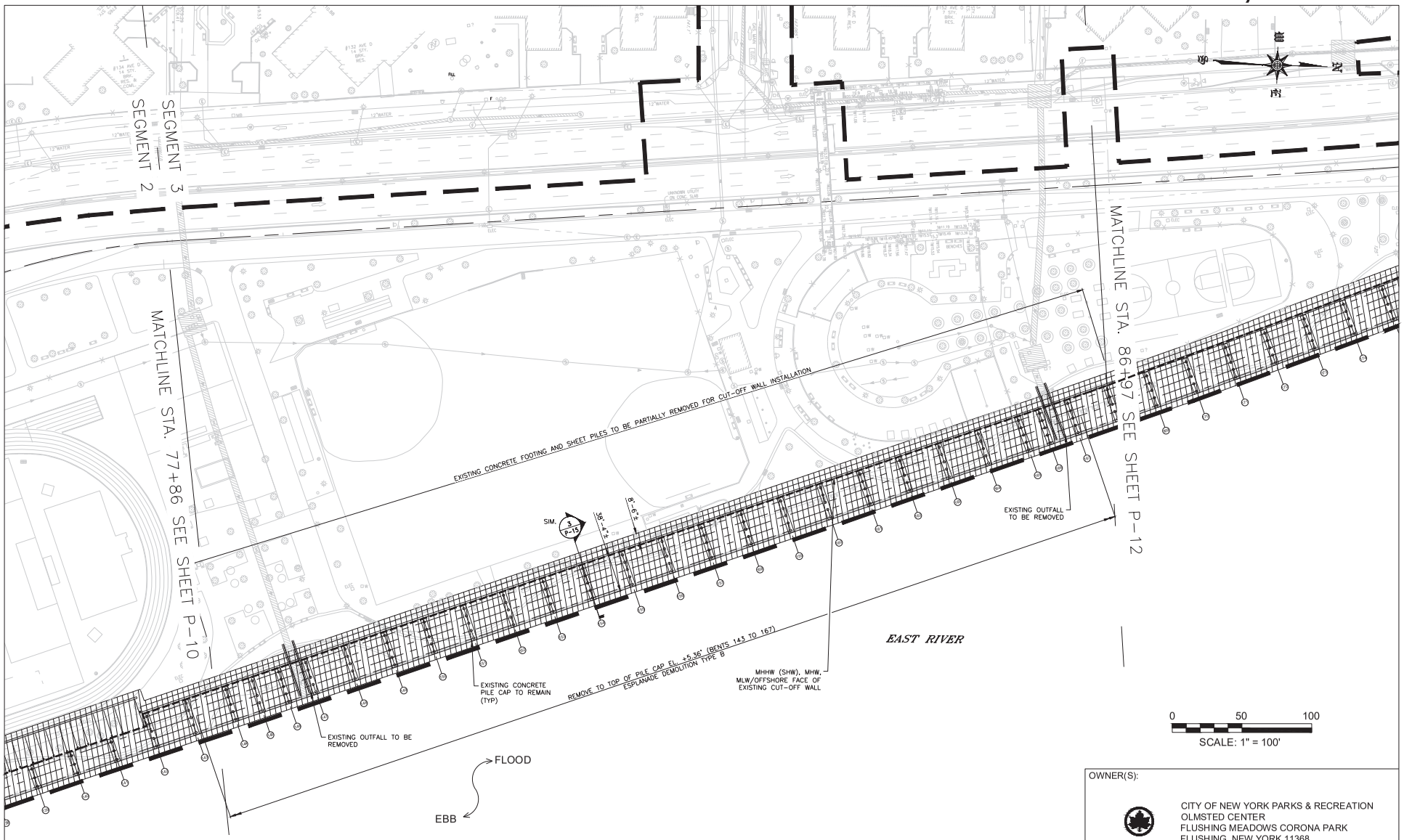

LEGEND:

- PROPOSED DEMOLITION
- LIMIT OF WORK
- LIMIT OF TYPICAL TIDAL INFLUENCE (VARIES)

2.28'	MEAN HIGHER HIGH WATER (MHHW) \ SPRING HIGH WATER (SHW)
1.96'	MEAN HIGH WATER (MHW)
0'	NAVD88(1988)
−2.57'	MEAN LOW WATER (MLW)
TIDAL DATA	

OWNER(S):

CITY OF NEW YORK PARKS & RECREATION
OLMSTED CENTER
FLUSHING MEADOWS CORONA PARK
FLUSHING, NEW YORK 11368

IN: EAST RIVER AT: MONTGOMERY STREET TO CAPT. PATRICK J. BROWN WALK
TOWN: NEW YORK STATE: NEW YORK
APPLICATION BY: NYC DEPARTMENT OF DESIGN AND CONSTRUCTION

WATERWAY:	DATUM:
EAST RIVER	NORTH AMERICAN VERTICAL DATUM 1988 (NAVD88)

EAST SIDE COASTAL RESILIENCY PROJECT

DATE: 11/15/2019	REV.: 1	SHEET NO 11 OF 66

ESPLANADE DEMOLITION PLAN - REACH I

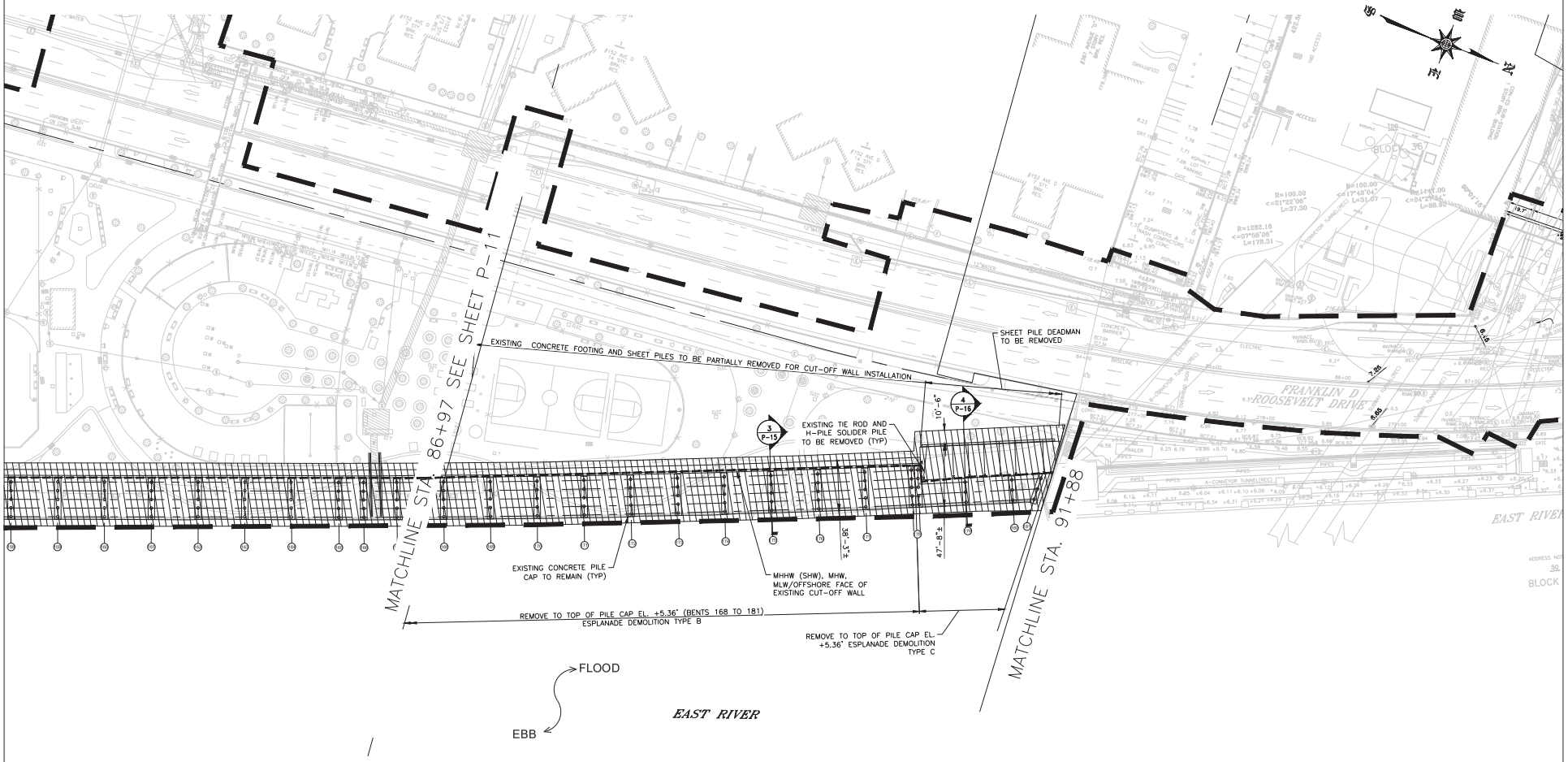

0 50 100
SCALE: 1" = 100'

LEGEND:

- PROPOSED DEMOLITION
- LIMIT OF WORK
- LIMIT OF TYPICAL TIDAL INFLUENCE (VARIES)

2.28'	MEAN HIGHER HIGH WATER (MHHW) \ SPRING HIGH WATER (SHW)
1.96'	MEAN HIGH WATER (MHW)
0'	NAVD88(1988)
−2.57'	MEAN LOW WATER (MLW)
TIDAL DATA	

OWNER(S):

CITY OF NEW YORK PARKS & RECREATION
OLMSTED CENTER
FLUSHING MEADOWS CORONA PARK
FLUSHING, NEW YORK 11368

IN: EAST RIVER AT: MONTGOMERY STREET TO CAPT. PATRICK J. BROWN WALK
TOWN: NEW YORK STATE: NEW YORK
APPLICATION BY: NYC DEPARTMENT OF DESIGN AND CONSTRUCTION

WATERWAY:	DATUM:
EAST RIVER	NORTH AMERICAN VERTICAL DATUM 1988 (NAVD88)

EAST SIDE COASTAL RESILIENCY PROJECT

DATE: 11/15/2019	REV.: 1	SHEET NO 12 OF 66

ESPLANADE DEMOLITION PLAN - REACH J

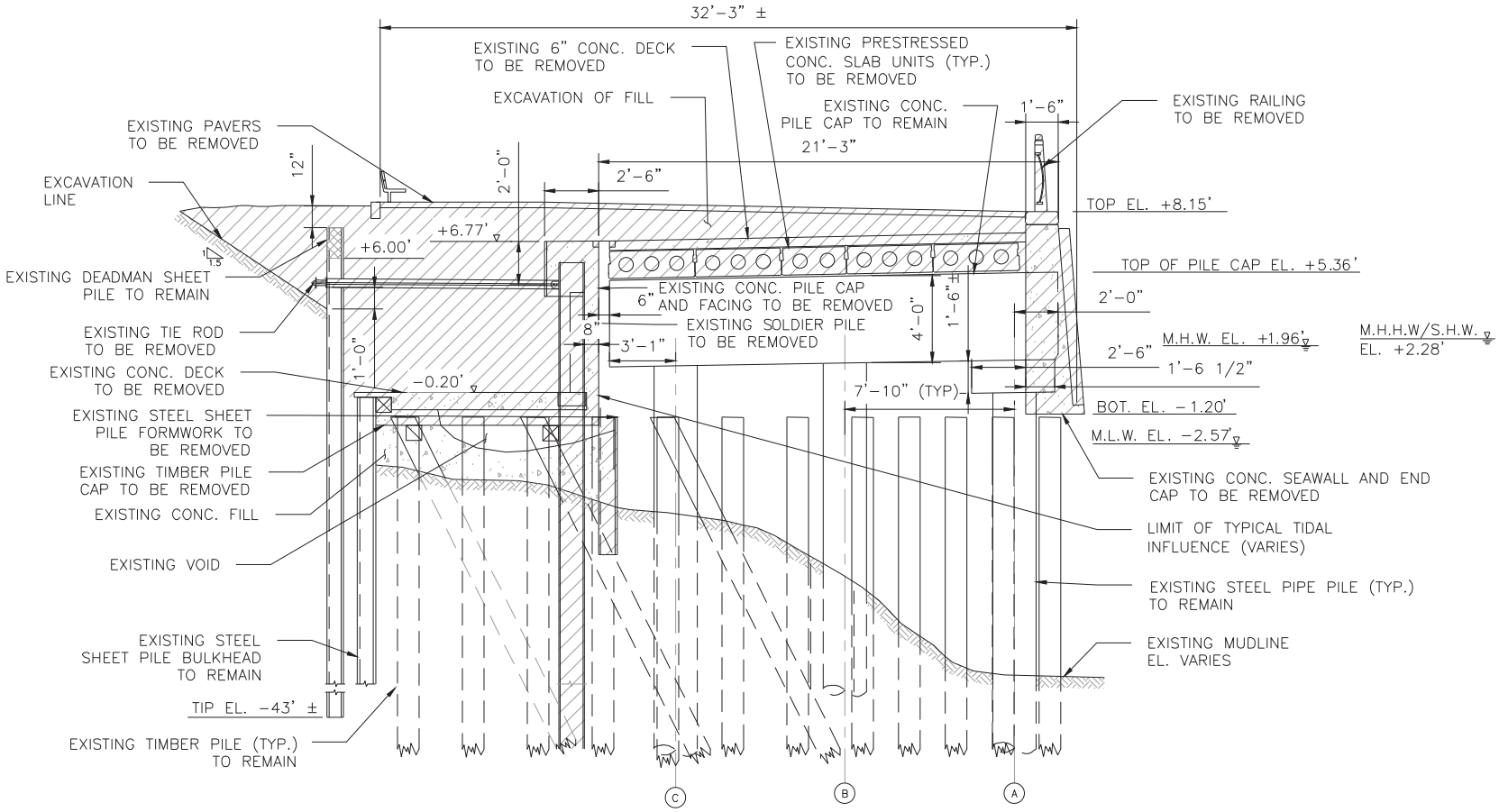

1 P-5 DEMOLITION TO PILE CAP LEVEL – ESPLANADE DEMOLITION TYPE A
SCALE : 1/8"=1'-0"

P-6
P-8

1/8"=1'-0"

0 5 10 15 FT.

LEGEND

PROPOSED DEMOLITION

OWNER(S):

CITY OF NEW YORK PARKS & RECREATION
OLMSTED CENTER
FLUSHING MEADOWS CORONA PARK
FLUSHING, NEW YORK 11368

IN: EAST RIVER AT: MONTGOMERY STREET TO CAPT. PATRICK J. BROWN WALK
TOWN: NEW YORK STATE: NEW YORK
APPLICATION BY: NYC DEPARTMENT OF DESIGN AND CONSTRUCTION

WATERWAY: EAST RIVER
DATUM: NORTH AMERICAN VERTICAL DATUM 1988 (NAVD88)

EAST SIDE COASTAL RESILIENCY PROJECT

DATE: 11/15/2019 REV.: 1 SHEET NO 13 OF 66

DEMOLITION CROSS SECTION

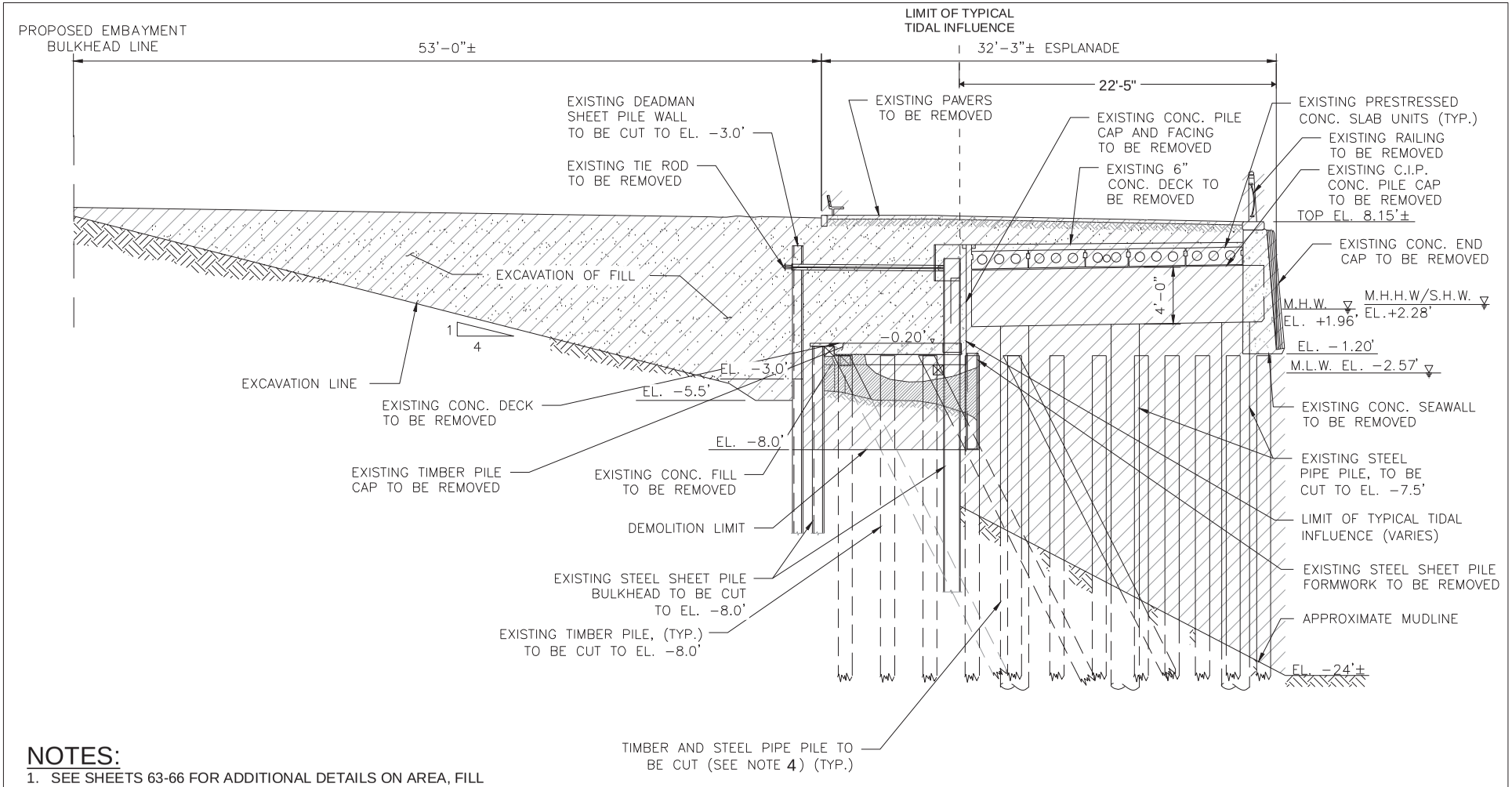

2 P-6 PROPOSED SOUTH EMBAYMENT SECTION – DEMOLITION
SCALE 3/32" = 1'-0"

NOTES:

1. SEE SHEETS 63-66 FOR ADDITIONAL DETAILS ON AREA, FILL VOLUME, AND CUT VOLUME ASSOCIATED WITH PROPOSED EMBAYMENT.
2. REMOVE ALL TIMBER DEBRIS, CONCRETE, AND ANY OTHER OBSTRUCTIONS FROM MUDLINE WITHIN WORK AREA.
3. CONTRACTOR SHALL ENSURE STABLE SLOPES DURING AND AFTER DEMOLITION.
4. EXISTING TIMBER PILES AROUND PROPOSED ECO-CONC ARMOR AND EXISTING STEEL PIPE PILES SHALL BE CUT-OFF ABOVE THE MUDLINE, APPROXIMATELY 5FT BELOW MLW.

LEGEND

PROPOSED DEMOLITION

EXCAVATION OF FILL

3/32"=1'-0" 0 5 20 FT.

OWNER(S):

CITY OF NEW YORK PARKS & RECREATION
OLMSTED CENTER
FLUSHING MEADOWS CORONA PARK
FLUSHING, NEW YORK 11368

IN: EAST RIVER AT: MONTGOMERY STREET TO CAPT. PATRICK J. BROWN WALK
TOWN: NEW YORK STATE: NEW YORK
APPLICATION BY: NYC DEPARTMENT OF DESIGN AND CONSTRUCTION

WATERWAY: EAST RIVER
DATUM: NORTH AMERICAN VERTICAL DATUM 1988 (NAVD88)

EAST SIDE COASTAL RESILIENCY PROJECT

DATE: 11/15/2019 REV.: 1 SHEET NO 14 OF 66

DEMOLITION CROSS SECTION - PROPOSED SOUTH EMBAYMENT

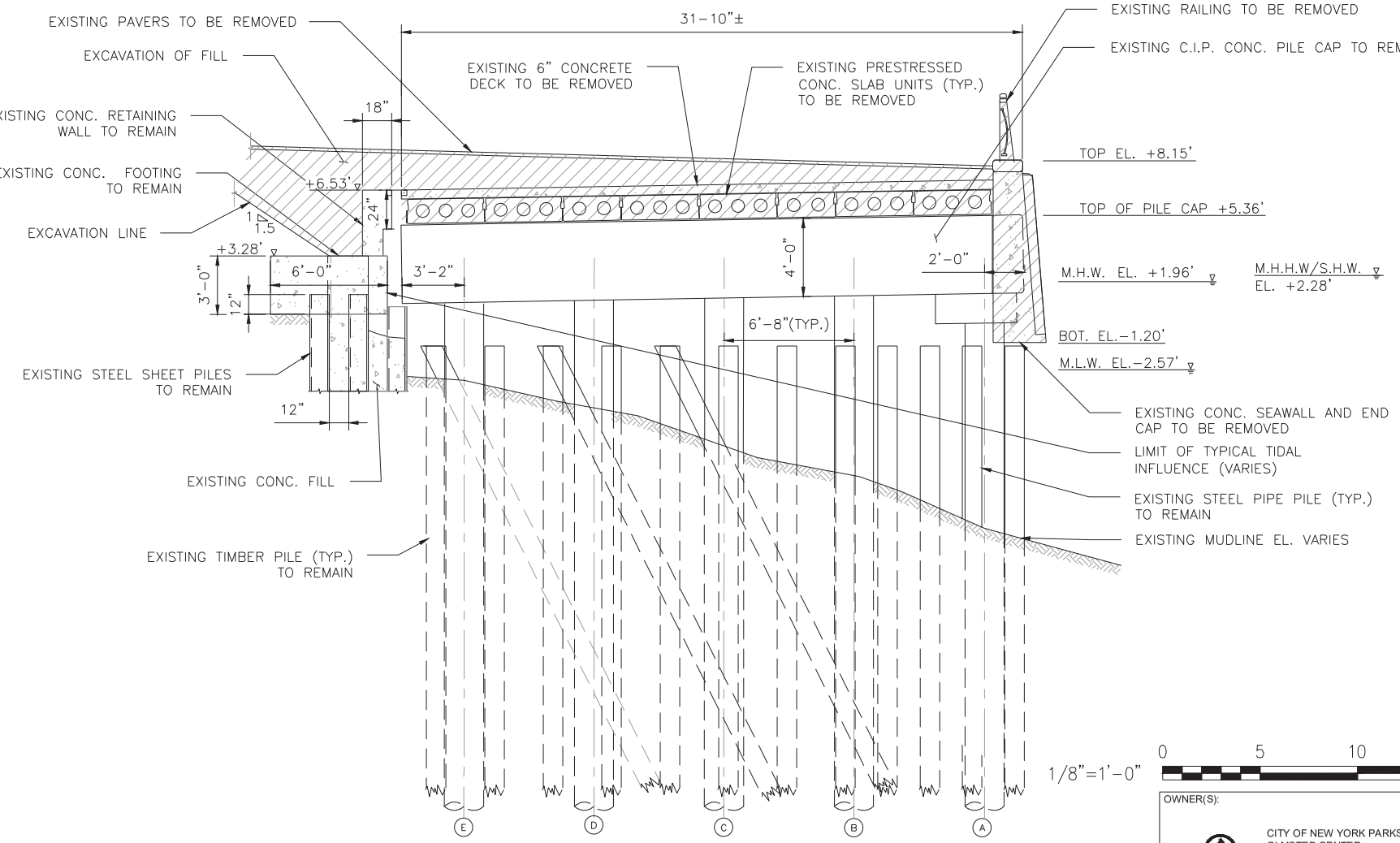

3 / P-6 DEMOLITION TO PILE CAP LEVEL – ESPLANADE DEMOLITION TYPE B
SCALE : 1/8"=1'-0"

P-7
P-8
P-9
P-10
P-11
P-12

1/8"=1'-0"

0 5 10 15 FT.

LEGEND

PROPOSED DEMOLITION

OWNER(S):

CITY OF NEW YORK PARKS & RECREATION
OLMSTED CENTER
FLUSHING MEADOWS CORONA PARK
FLUSHING, NEW YORK 11368

IN: EAST RIVER AT: MONTGOMERY STREET TO CAPT. PATRICK J. BROWN WALK
TOWN: NEW YORK STATE: NEW YORK
APPLICATION BY: NYC DEPARTMENT OF DESIGN AND CONSTRUCTION

WATERWAY: EAST RIVER
DATUM: NORTH AMERICAN VERTICAL DATUM 1988 (NAVD88)

EAST SIDE COASTAL RESILIENCY PROJECT

DATE: 11/15/2019 REV.: 1 SHEET NO 15 OF 66

DEMOLITION CROSS SECTION

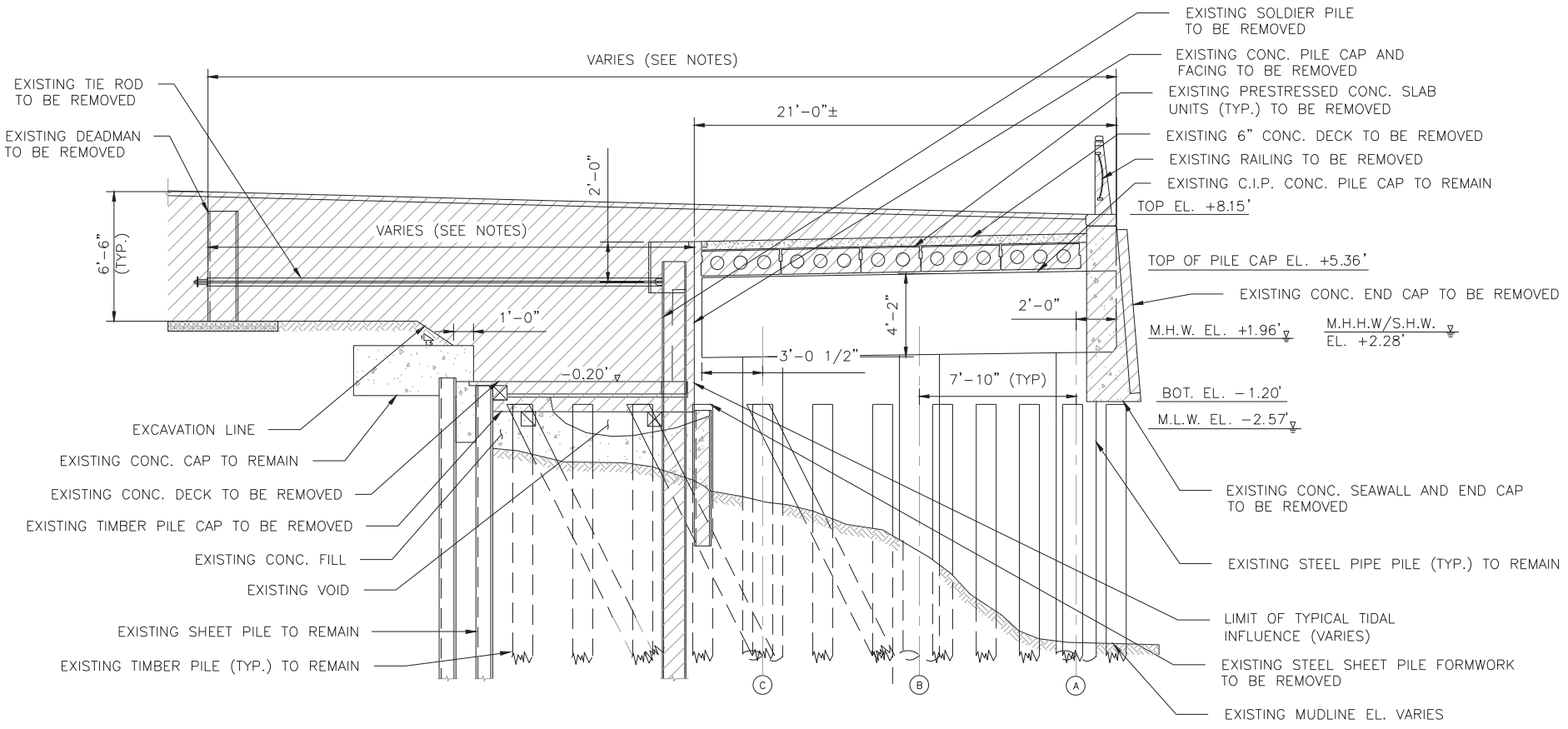

6 P-7 DEMOLITION TO PILE CAP LEVEL – ESPLANADE DEMOLITION TYPE C
SCALE : 1/8"=1'-0"
P-8 P-9 P-10 P-12

1/8"=1'-0" 0 5 10 15 FT.

NOTES:

1. THE DISTANCE BETWEEN THE WATERSIDE OF THE EXISTING CONC. PILE CAP TO THE LANDSIDE OF THE DEADPAN VARIES DEPENDING ON BENTS, AS FOLLOWS:
   - BETWEEN BENTS 61 AND 74 = 48'-5"
   - BETWEEN BENTS 94 AND 121 = 45'-5"
   - BETWEEN BENTS 129 AND 142 = 48'-5"
2. DEADPAN IS 6" DEEPER BETWEEN BENTS 94 AND 121.

LEGEND

PROPOSED DEMOLITION

OWNER(S):

CITY OF NEW YORK PARKS & RECREATION
OLMSTED CENTER
FLUSHING MEADOWS CORONA PARK
FLUSHING, NEW YORK 11368

IN: EAST RIVER AT: MONTGOMERY STREET TO CAPT. PATRICK J. BROWN WALK
TOWN: NEW YORK STATE: NEW YORK
APPLICATION BY: NYC DEPARTMENT OF DESIGN AND CONSTRUCTION

WATERWAY:	DATUM:
EAST RIVER	NORTH AMERICAN VERTICAL DATUM 1988 (NAVD88)

EAST SIDE COASTAL RESILIENCY PROJECT

DATE: 11/15/2019	REV.: 1	SHEET NO 16 OF 66

DEMOLITION CROSS SECTION

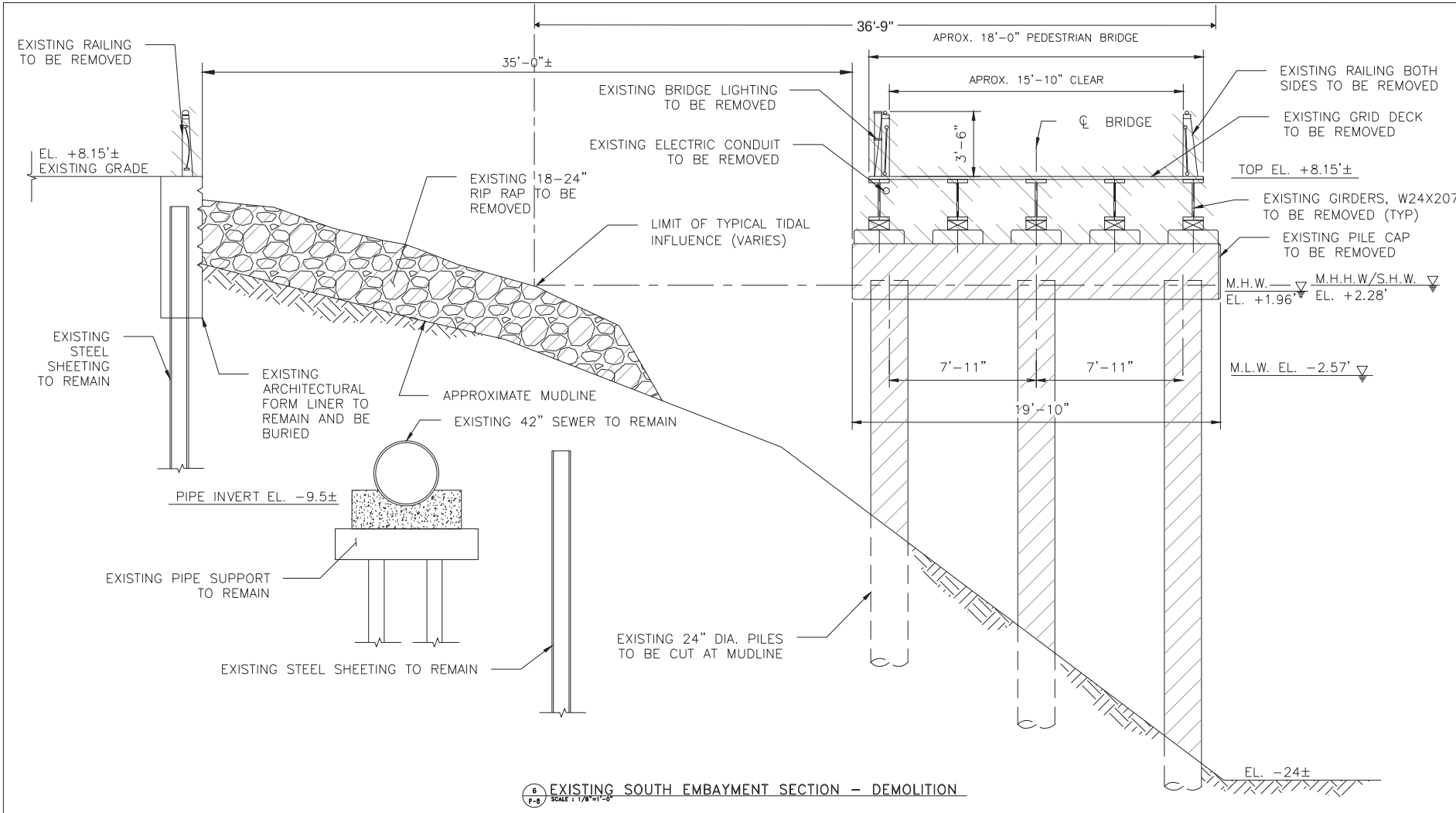

6 P-8 EXISTING SOUTH EMBAYMENT SECTION – DEMOLITION
SCALE : 1/8"=1'-0"

NOTES:

1. SEE SHEETS 63-66 FOR ADDITIONAL DETAILS ON AREA, FILL VOLUME, AND CUT VOLUME ASSOCIATED WITH EXISTING EMBAYMENT.
2. REMOVE ALL EXISTING TIMBER DEBRIS FROM MUDLINE WITHIN WORK AREA.
3. CONTRACTOR SHALL ENSURE STABLE SLOPES DURING AND AFTER DEMOLITION.

LEGEND

PROPOSED DEMOLITION

1/8"=1'-0" 0 5 10 15 FT.

OWNER(S):

CITY OF NEW YORK PARKS & RECREATION
OLMSTED CENTER
FLUSHING MEADOWS CORONA PARK
FLUSHING, NEW YORK 11368

IN: EAST RIVER AT: MONTGOMERY STREET TO CAPT. PATRICK J. BROWN WALK
TOWN: NEW YORK STATE: NEW YORK
APPLICATION BY: NYC DEPARTMENT OF DESIGN AND CONSTRUCTION

WATERWAY: EAST RIVER
DATUM: NORTH AMERICAN VERTICAL DATUM 1988 (NAVD88)

EAST SIDE COASTAL RESILIENCY PROJECT

DATE: 11/15/2019 REV.: 1 SHEET NO 17 OF 66

DEMOLITION CROSS SECTION - EXISTING SOUTH EMBAYMENT

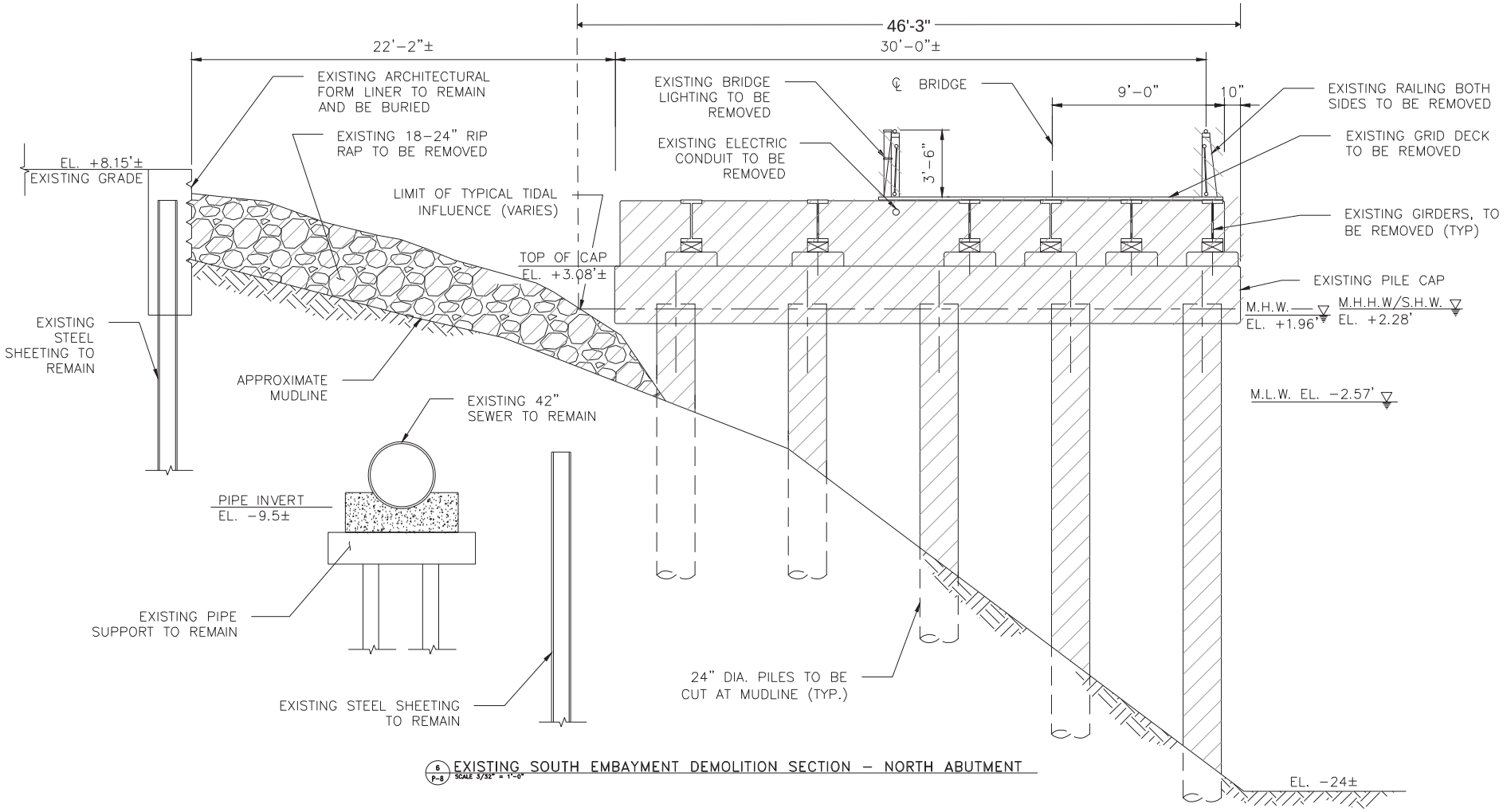

6 P-8 EXISTING SOUTH EMBAYMENT DEMOLITION SECTION – NORTH ABUTMENT
SCALE 3/32" = 1'-0"

NOTES:

1. SEE SHEETS 63-66 FOR ADDITIONAL DETAILS ON AREA, FILL VOLUME, AND CUT VOLUME ASSOCIATED WITH EXISTING EMBAYMENT.
2. REMOVE ALL EXISTING TIMBER DEBRIS FROM MUDLINE WITHIN WORK AREA.
3. CONTRACTOR SHALL ENSURE STABLE SLOPES DURING AND AFTER DEMOLITION.

LEGEND

PROPOSED DEMOLITION

1/8"=1'-0" 0 5 10 15 FT.

OWNER(S):

CITY OF NEW YORK PARKS & RECREATION
OLMSTED CENTER
FLUSHING MEADOWS CORONA PARK
FLUSHING, NEW YORK 11368

IN: EAST RIVER AT: MONTGOMERY STREET TO CAPT. PATRICK J. BROWN WALK
TOWN: NEW YORK STATE: NEW YORK
APPLICATION BY: NYC DEPARTMENT OF DESIGN AND CONSTRUCTION

WATERWAY:	DATUM:
EAST RIVER	NORTH AMERICAN VERTICAL DATUM 1988 (NAVD88)

EAST SIDE COASTAL RESILIENCY PROJECT

DATE: 11/15/2019	REV.: 1	SHEET NO 18 OF 66

DEMOLITION CROSS SECTION - EXISTING SOUTH EMBAYMENT

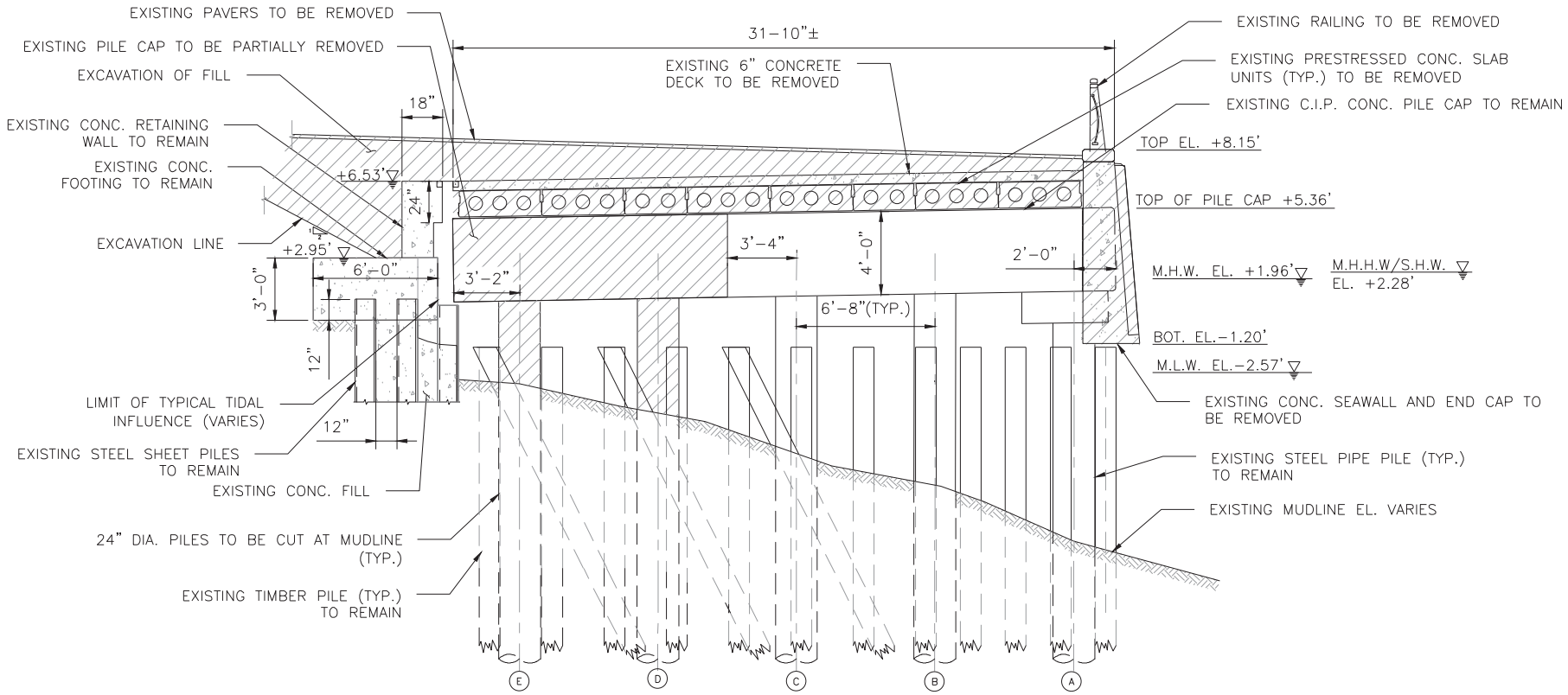

7 P-8 DEMOLITION TO PILE CAP LEVEL – ESPLANADE DEMOLITION TYPE D
SCALE 1/8" = 1'-0"

1/8"=1'-0"

0 5 10 15 FT.

LEGEND

PROPOSED DEMOLITION

OWNER(S):

CITY OF NEW YORK PARKS & RECREATION
OLMSTED CENTER
FLUSHING MEADOWS CORONA PARK
FLUSHING, NEW YORK 11368

IN: EAST RIVER AT: MONTGOMERY STREET TO CAPT. PATRICK J. BROWN WALK
TOWN: NEW YORK STATE: NEW YORK
APPLICATION BY: NYC DEPARTMENT OF DESIGN AND CONSTRUCTION

WATERWAY: EAST RIVER
DATUM: NORTH AMERICAN VERTICAL DATUM 1988 (NAVD88)

EAST SIDE COASTAL RESILIENCY PROJECT

DATE: 11/15/2019 REV.: 1 SHEET NO 19 OF 66

DEMOLITION CROSS SECTION

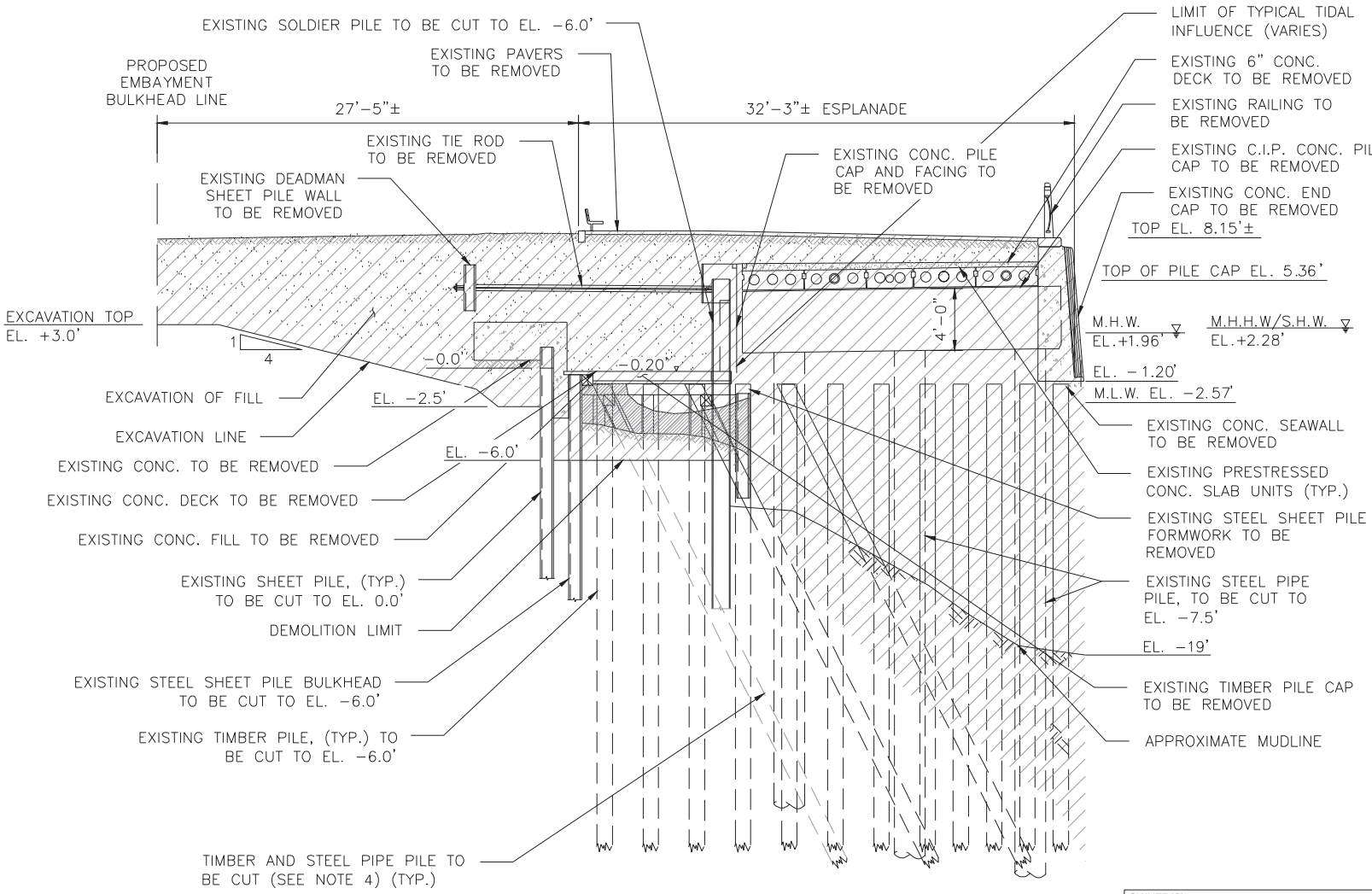

8 P-9 PROPOSED NORTH EMBAYMENT SECTION − DEMOLITION
SCALE 3/32" = 1'-0"

NOTES:

1. SEE SHEETS 63-66 FOR ADDITIONAL DETAILS ON AREA, FILL VOLUME, AND CUT VOLUME ASSOCIATED WITH PROPOSED EMBAYMENT.
2. REMOVE ALL TIMBER DEBRIS FROM MUDLINE WITHIN WORK AREA.
3. CONTRACTOR SHALL ENSURE STABLE SLOPES DURING AND AFTER DEMOLITION.
4. EXISTING TIMBER PILES AROUND PROPOSED ECO-CONC ARMOR AND EXISTING STEEL PIPE PILES SHALL BE CUT-OFF ABOVE THE MUDLINE, APPROXIMATELY 5FT BELOW MLW.

LEGEND

PROPOSED DEMOLITION

EXCAVATION OF FILL

0 5 20 FT.

3/32"=1'−0"

OWNER(S):

CITY OF NEW YORK PARKS & RECREATION
OLMSTED CENTER
FLUSHING MEADOWS CORONA PARK
FLUSHING, NEW YORK 11368

IN: EAST RIVER AT: MONTGOMERY STREET TO CAPT. PATRICK J. BROWN WALK
TOWN: NEW YORK STATE: NEW YORK
APPLICATION BY: NYC DEPARTMENT OF DESIGN AND CONSTRUCTION

WATERWAY: EAST RIVER
DATUM: NORTH AMERICAN VERTICAL DATUM 1988 (NAVD88)

EAST SIDE COASTAL RESILIENCY PROJECT

DATE: 11/15/2019 REV.: 1 SHEET NO 20 OF 66

DEMOLITION CROSS SECTION - PROPOSED NORTH EMBAYMENT

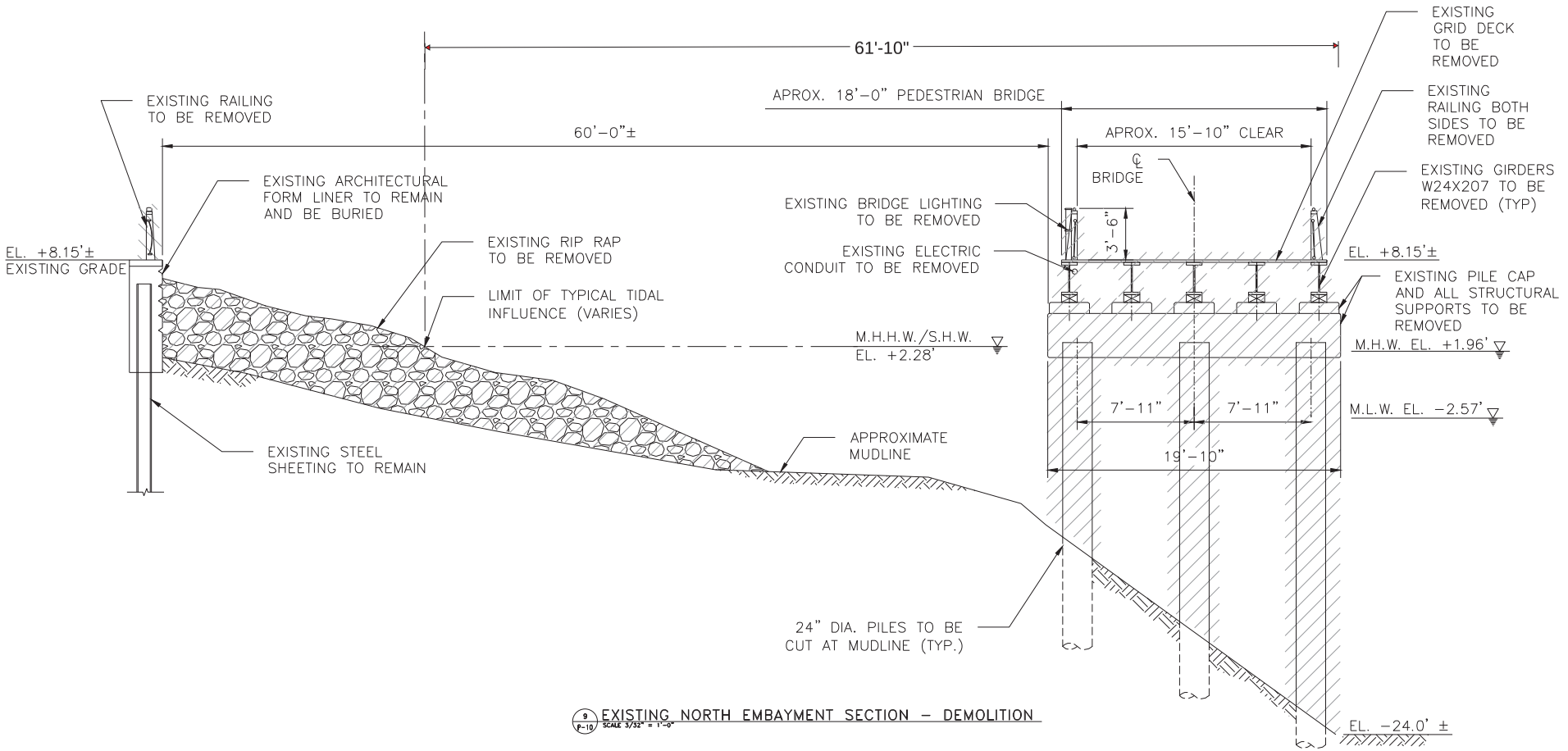

9/P-10 EXISTING NORTH EMBAYMENT SECTION – DEMOLITION
SCALE 3/32" = 1'-0"

NOTES:

1. SEE SHEETS 63-66 FOR ADDITIONAL DETAILS ON AREA, FILL VOLUME, AND CUT VOLUME ASSOCIATED WITH EXISTING EMBAYMENT.
2. REMOVE ALL EXISTING TIMBER DEBRIS FROM MUDLINE WITHIN WORK AREA.
3. CONTRACTOR SHALL ENSURE STABLE SLOPES DURING AND AFTER DEMOLITION.

LEGEND

PROPOSED DEMOLITION

OWNER(S):

CITY OF NEW YORK PARKS & RECREATION
OLMSTED CENTER
FLUSHING MEADOWS CORONA PARK
FLUSHING, NEW YORK 11368

IN: EAST RIVER AT: MONTGOMERY STREET TO CAPT. PATRICK J. BROWN WALK
TOWN: NEW YORK STATE: NEW YORK
APPLICATION BY: NYC DEPARTMENT OF DESIGN AND CONSTRUCTION

WATERWAY:	DATUM:
EAST RIVER	NORTH AMERICAN VERTICAL DATUM 1988 (NAVD88)

EAST SIDE COASTAL RESILIENCY PROJECT

DATE: 11/15/2019	REV.: 1	SHEET NO 21 OF 66

DEMOLITION CROSS SECTION - EXISTING NORTH EMBAYMENT

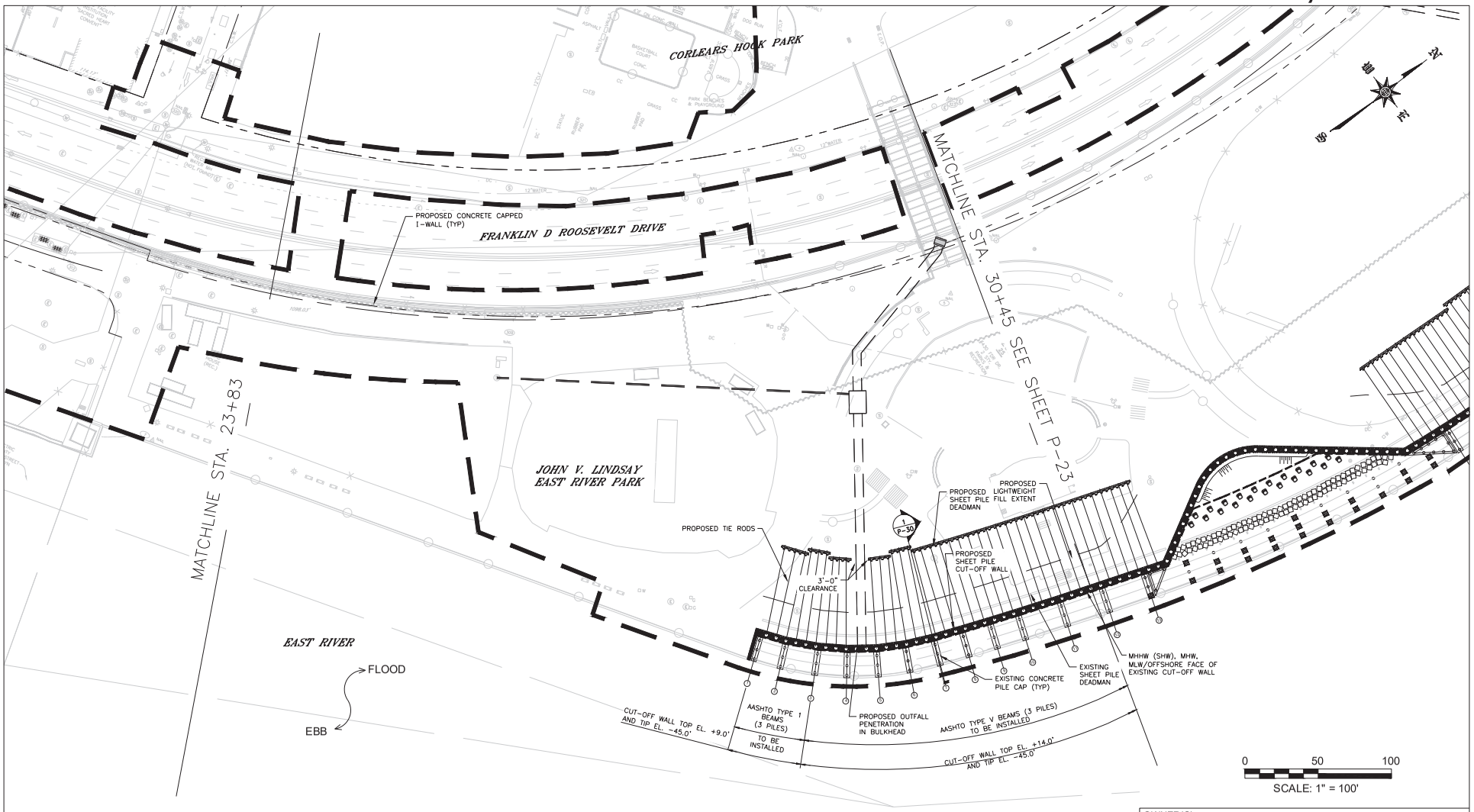

LEGEND:

- LIMIT OF WORK
- LIMIT OF TYPICAL TIDAL INFLUENCE (VARIES)
- PROPOSED COMB. SEWER

2.28'	MEAN HIGHER HIGH WATER (MHHW) \ SPRING HIGH WATER (SHW)
1.96'	MEAN HIGH WATER (MHW)
0'	NAVD88(1988)
-2.57'	MEAN LOW WATER (MLW)
TIDAL DATA	

OWNER(S):

CITY OF NEW YORK PARKS & RECREATION
OLMSTED CENTER
FLUSHING MEADOWS CORONA PARK
FLUSHING, NEW YORK 11368

IN: EAST RIVER AT: MONTGOMERY STREET TO CAPT. PATRICK J. BROWN WALK
TOWN: NEW YORK STATE: NEW YORK
APPLICATION BY: NYC DEPARTMENT OF DESIGN AND CONSTRUCTION

WATERWAY:	DATUM:
EAST RIVER	NORTH AMERICAN VERTICAL DATUM 1988 (NAVD88)

EAST SIDE COASTAL RESILIENCY PROJECT

DATE: 11/15/2019	REV.: 1	SHEET NO 22 OF 66

ESPLANADE STRUCTURAL PLAN - REACH C

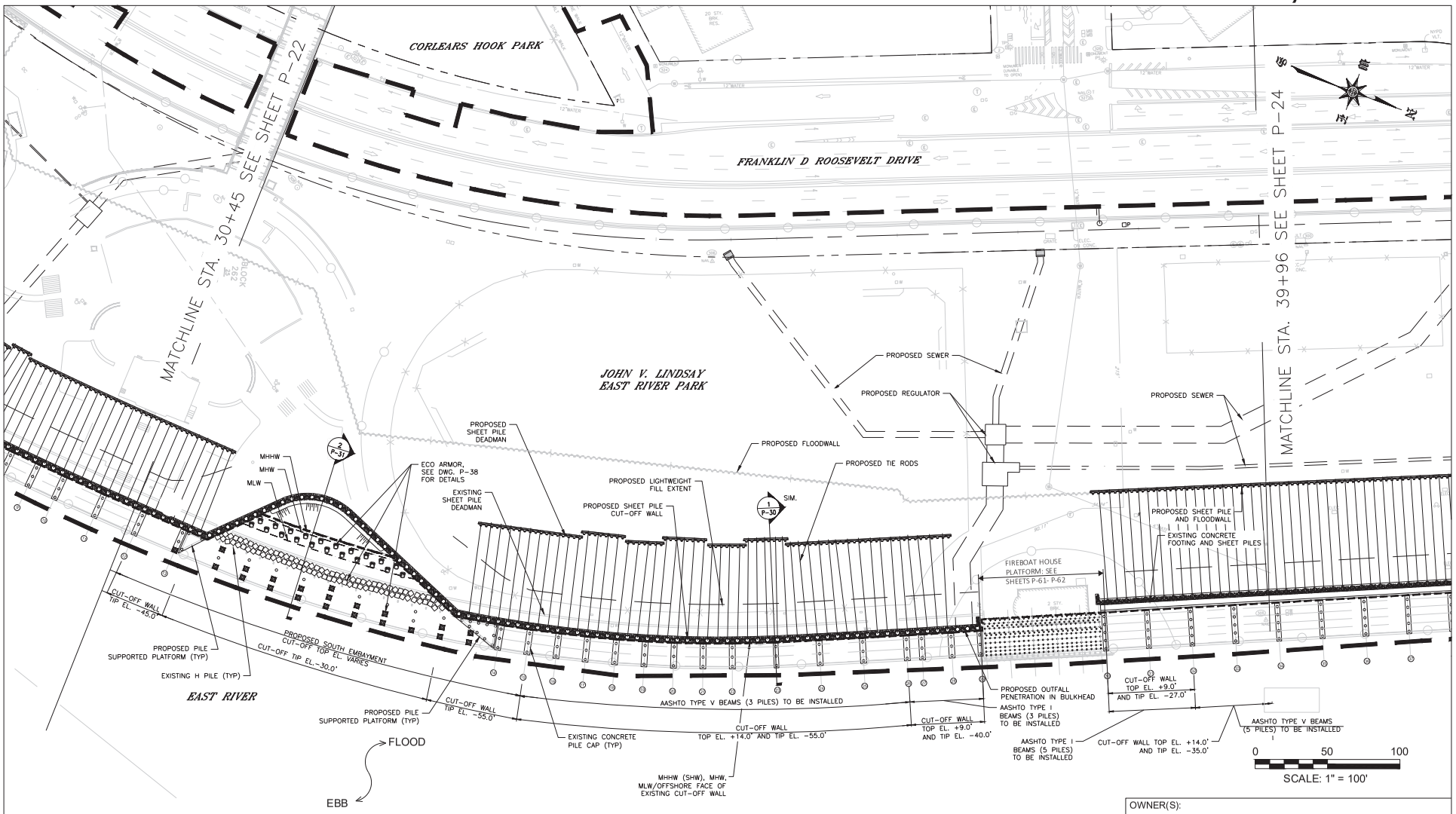

2.28'	MEAN HIGHER HIGH WATER (MHHW) \ SPRING HIGH WATER (SHW)
1.96'	MEAN HIGH WATER (MHW)
0'	NAVD88(1988)
−2.57'	MEAN LOW WATER (MLW)
TIDAL DATA	

LEGEND:

- LIMIT OF WORK
- LIMIT OF TYPICAL TIDAL INFLUENCE (VARIES)
- PROPOSED COMB. SEWER

NOTE:

1. SEE DWG P-38 FOR DETAILED PLAN OF PROPOSED SOUTH EMBAYMENT.
2. SEE DWG P-61 THROUGH P-62 FOR DETAILS ON FIREBOAT HOUSE PLATFORM REHABILITATION.

OWNER(S):

CITY OF NEW YORK PARKS & RECREATION
OLMSTED CENTER
FLUSHING MEADOWS CORONA PARK
FLUSHING, NEW YORK 11368

IN: EAST RIVER AT: MONTGOMERY STREET TO CAPT. PATRICK J. BROWN WALK
TOWN: NEW YORK STATE: NEW YORK
APPLICATION BY: NYC DEPARTMENT OF DESIGN AND CONSTRUCTION

WATERWAY:	DATUM:
EAST RIVER	NORTH AMERICAN VERTICAL DATUM 1988 (NAVD88)

EAST SIDE COASTAL RESILIENCY PROJECT

DATE: 11/15/2019	REV.: 1	SHEET NO 23 OF 66

ESPLANADE STRUCTURAL PLAN - REACH D

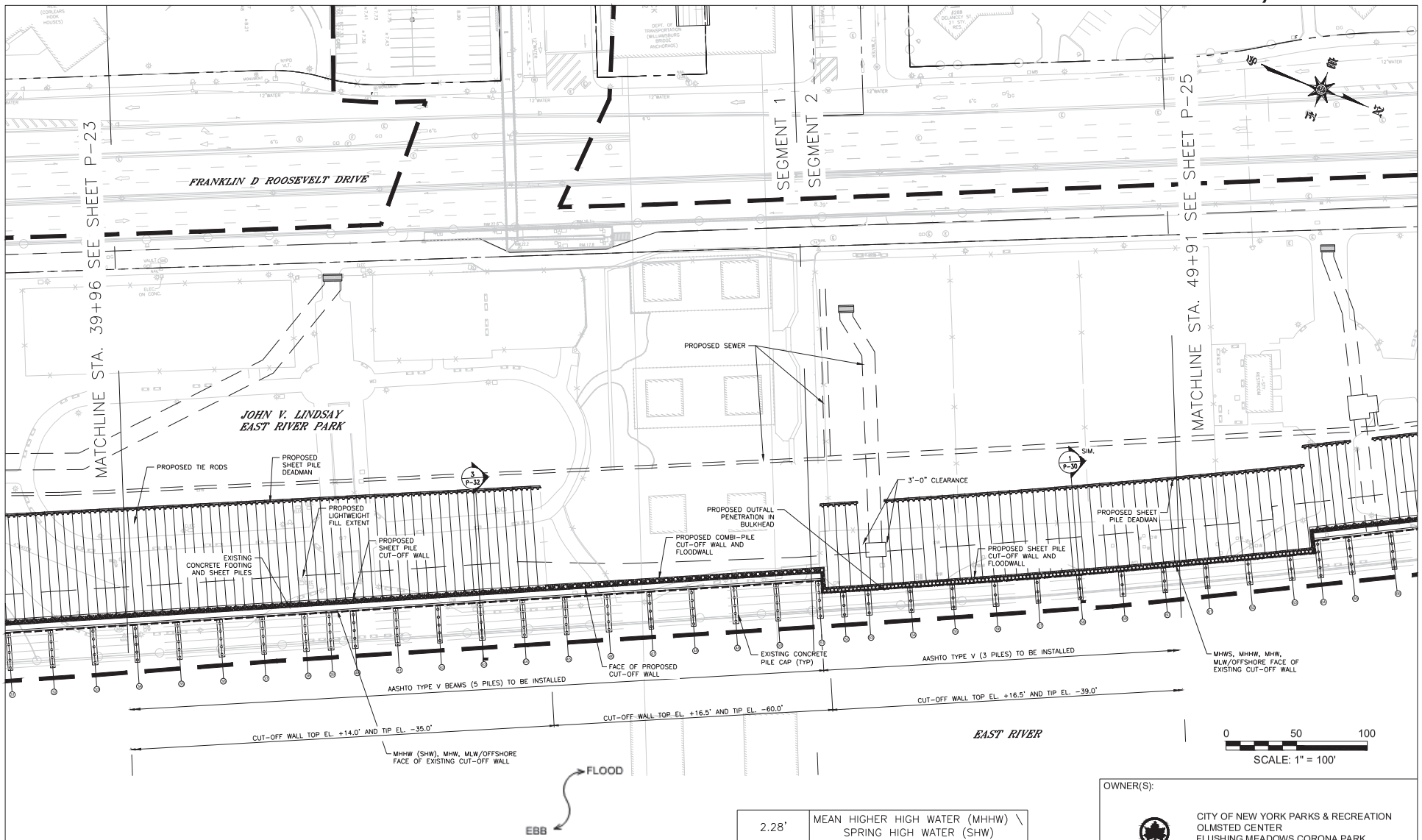

LEGEND:

- LIMIT OF WORK
- LIMIT OF TYPICAL TIDAL INFLUENCE (VARIES)
- PROPOSED COMB. SEWER

2.28'	MEAN HIGHER HIGH WATER (MHHW) \ SPRING HIGH WATER (SHW)
1.96'	MEAN HIGH WATER (MHW)
0'	NAVD88(1988)
-2.57'	MEAN LOW WATER (MLW)
TIDAL DATA	

OWNER(S):

CITY OF NEW YORK PARKS & RECREATION
OLMSTED CENTER
FLUSHING MEADOWS CORONA PARK
FLUSHING, NEW YORK 11368

IN: EAST RIVER AT: MONTGOMERY STREET TO CAPT. PATRICK J. BROWN WALK
TOWN: NEW YORK STATE: NEW YORK
APPLICATION BY: NYC DEPARTMENT OF DESIGN AND CONSTRUCTION

WATERWAY:	DATUM:
EAST RIVER	NORTH AMERICAN VERTICAL DATUM 1988 (NAVD88)

EAST SIDE COASTAL RESILIENCY PROJECT

DATE: 11/15/2019	REV.: 1	SHEET NO 24 OF 66

ESPLANADE STRUCTURAL PLAN - REACH E

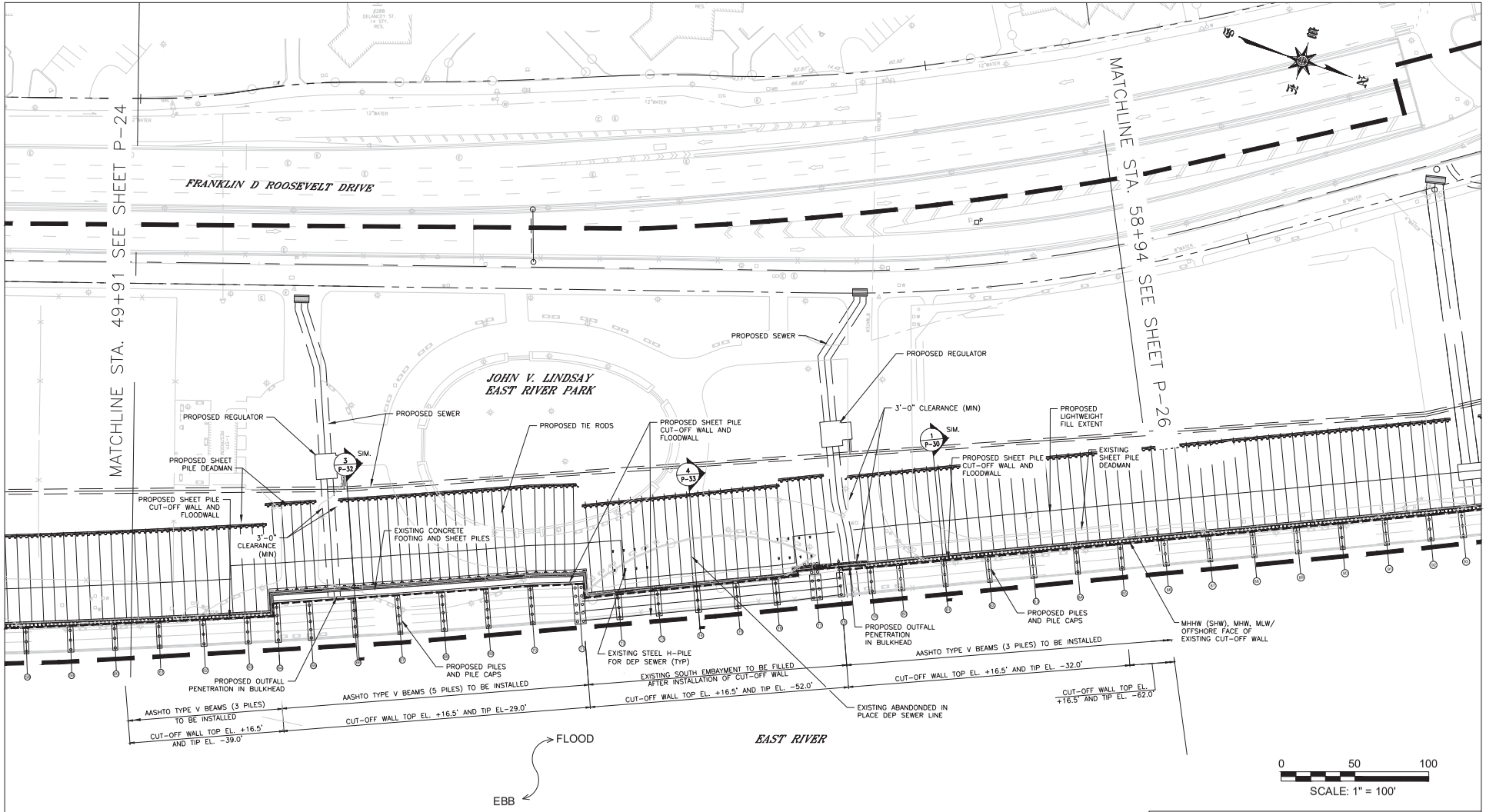

2.28'	MEAN HIGHER HIGH WATER (MHHW) \ SPRING HIGH WATER (SHW)
1.96'	MEAN HIGH WATER (MHW)
0'	NAVD88(1988)
-2.57'	MEAN LOW WATER (MLW)
TIDAL DATA	

LEGEND:

LIMIT OF WORK

LIMIT OF TYPICAL TIDAL INFLUENCE (VARIES)

PROPOSED COMB. SEWER

NOTES:

1. SEE SHEETS 63-66 FOR ADDITIONAL DETAILS ON AREA, FILL VOLUME, AND CUT VOLUME ASSOCIATED WITH EXISTING EMBAYMENT.

OWNER(S):

CITY OF NEW YORK PARKS & RECREATION
OLMSTED CENTER
FLUSHING MEADOWS CORONA PARK
FLUSHING, NEW YORK 11368

IN: EAST RIVER AT: MONTGOMERY STREET TO CAPT. PATRICK J. BROWN WALK
TOWN: NEW YORK STATE: NEW YORK
APPLICATION BY: NYC DEPARTMENT OF DESIGN AND CONSTRUCTION

WATERWAY:	DATUM:
EAST RIVER	NORTH AMERICAN VERTICAL DATUM 1988 (NAVD88)

EAST SIDE COASTAL RESILIENCY PROJECT

DATE: 11/15/2019	REV.: 1	SHEET NO 25 OF 66

ESPLANADE STRUCTURAL PLAN - REACH F

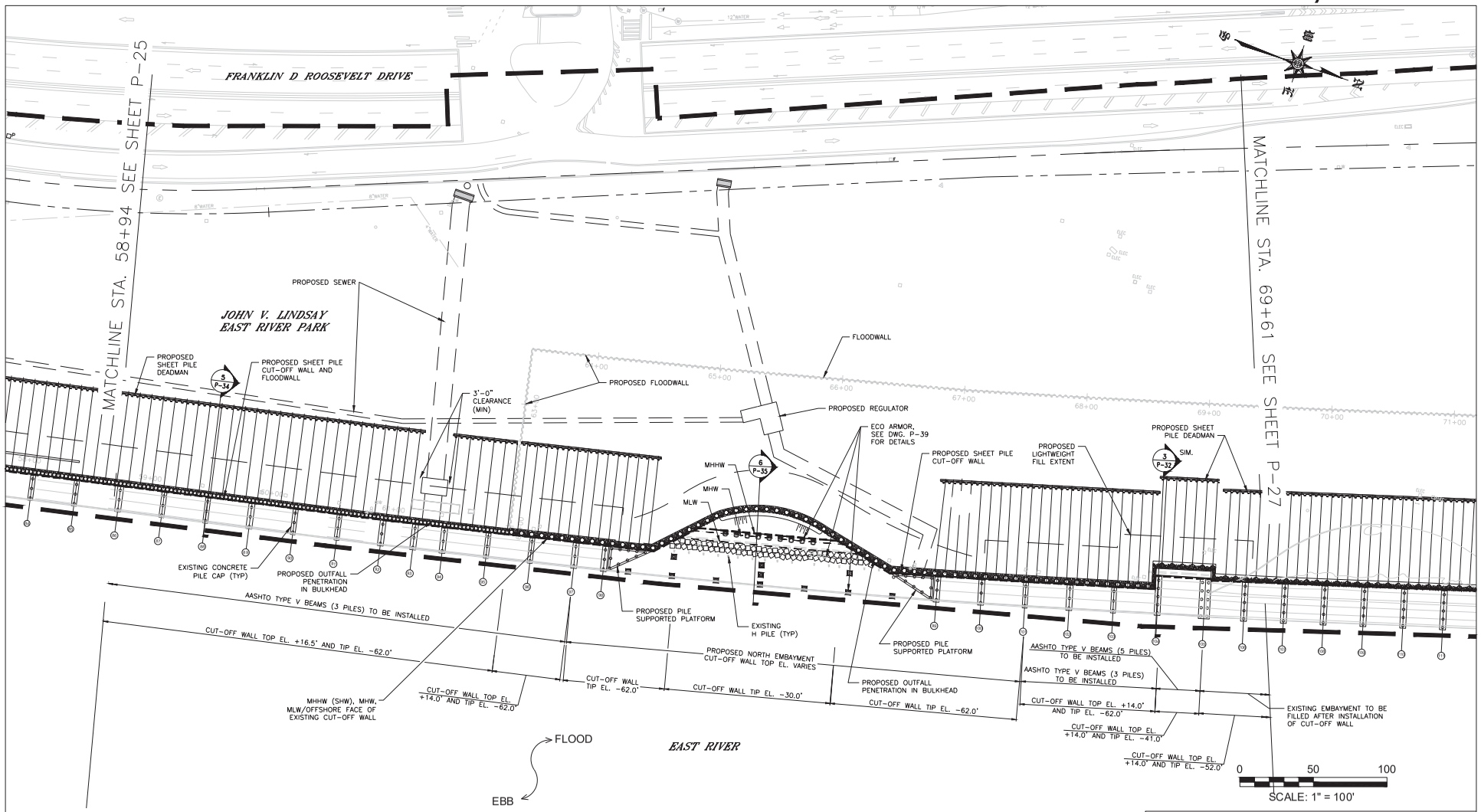

2.28'	MEAN HIGHER HIGH WATER (MHHW) \ SPRING HIGH WATER (SHW)
1.96'	MEAN HIGH WATER (MHW)
0'	NAVD88(1988)
−2.57'	MEAN LOW WATER (MLW)
TIDAL DATA	

LEGEND:

- LIMIT OF WORK
- LIMIT OF TYPICAL TIDAL INFLUENCE (VARIES)
- PROPOSED COMB. SEWER

NOTES:

1. SEE SHEET 39 FOR DETAILED PLAN OF PROPOSED NORTH EMBAYMENT.
2. SEE SHEETS 63-66 FOR ADDITIONAL DETAILS ON AREA, FILL VOLUME, AND CUT VOLUME ASSOCIATED WITH PROPOSED EMBAYMENT.

OWNER(S):

CITY OF NEW YORK PARKS & RECREATION
OLMSTED CENTER
FLUSHING MEADOWS CORONA PARK
FLUSHING, NEW YORK 11368

IN: EAST RIVER AT: MONTGOMERY STREET TO CAPT. PATRICK J. BROWN WALK
TOWN: NEW YORK STATE: NEW YORK
APPLICATION BY: NYC DEPARTMENT OF DESIGN AND CONSTRUCTION

WATERWAY:	DATUM:
EAST RIVER	NORTH AMERICAN VERTICAL DATUM 1988 (NAVD88)

EAST SIDE COASTAL RESILIENCY PROJECT

DATE: 11/15/2019	REV.: 1	SHEET NO 26 OF 66

ESPLANADE STRUCTURAL PLAN - REACH G

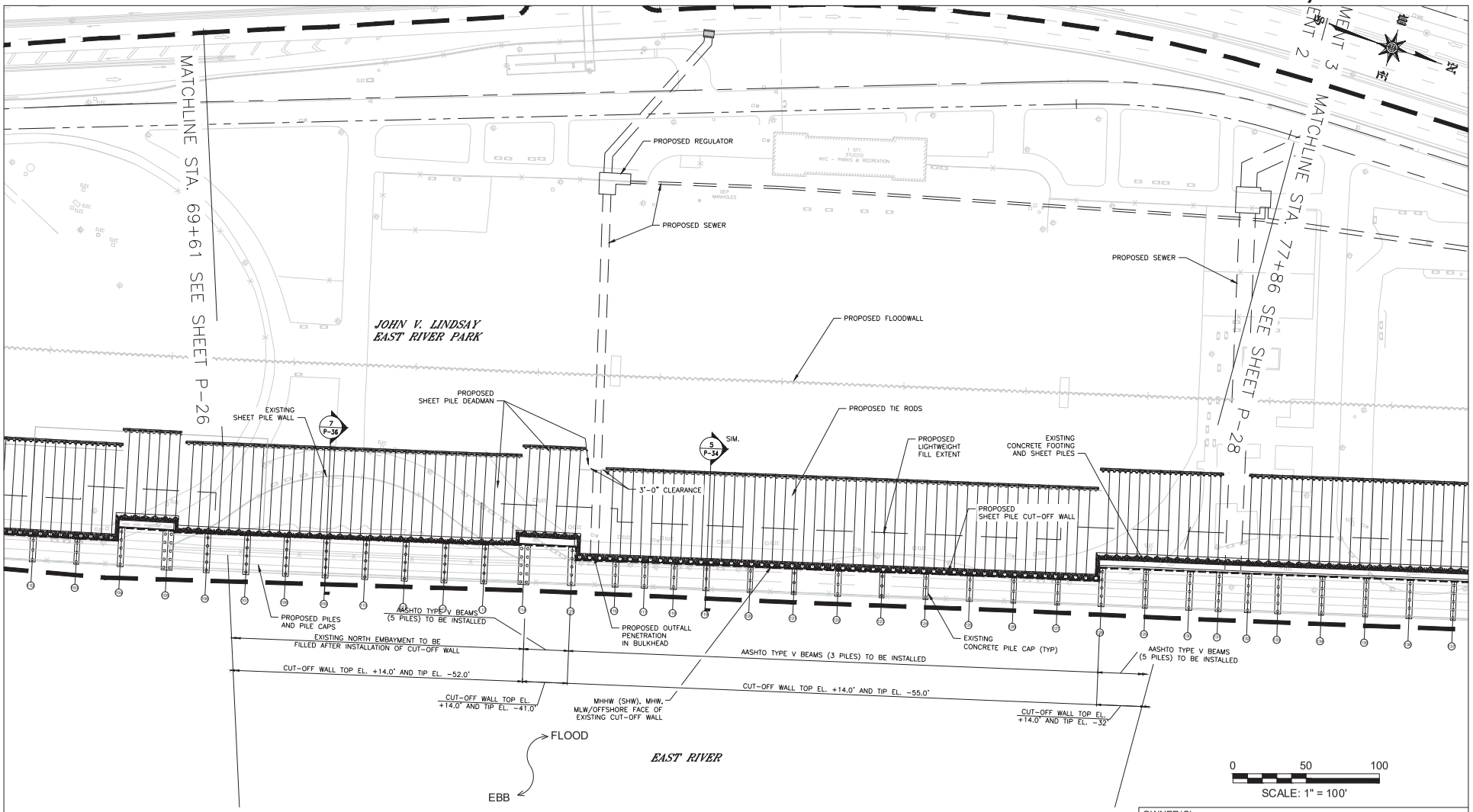

LEGEND:

LIMIT OF WORK

LIMIT OF TYPICAL TIDAL INFLUENCE (VARIES)

PROPOSED COMB. SEWER

2.28'	MEAN HIGHER HIGH WATER (MHHW) \ SPRING HIGH WATER (SHW)
1.96'	MEAN HIGH WATER (MHW)
0'	NAVD88(1988)
-2.57'	MEAN LOW WATER (MLW)
TIDAL DATA	

NOTES:

1. SEE SHEETS 63-66 FOR ADDITIONAL DETAILS ON AREA, FILL VOLUME, AND CUT VOLUME ASSOCIATED WITH EXISTING EMBAYMENT.

OWNER(S):

CITY OF NEW YORK PARKS & RECREATION
OLMSTED CENTER
FLUSHING MEADOWS CORONA PARK
FLUSHING, NEW YORK 11368

IN: EAST RIVER AT: MONTGOMERY STREET TO CAPT. PATRICK J. BROWN WALK
TOWN: NEW YORK STATE: NEW YORK
APPLICATION BY: NYC DEPARTMENT OF DESIGN AND CONSTRUCTION

WATERWAY:	DATUM:
EAST RIVER	NORTH AMERICAN VERTICAL DATUM 1988 (NAVD88)

EAST SIDE COASTAL RESILIENCY PROJECT

DATE: 11/15/2019	REV.: 1	SHEET NO 27 OF 66

ESPLANADE STRUCTURAL PLAN - REACH H

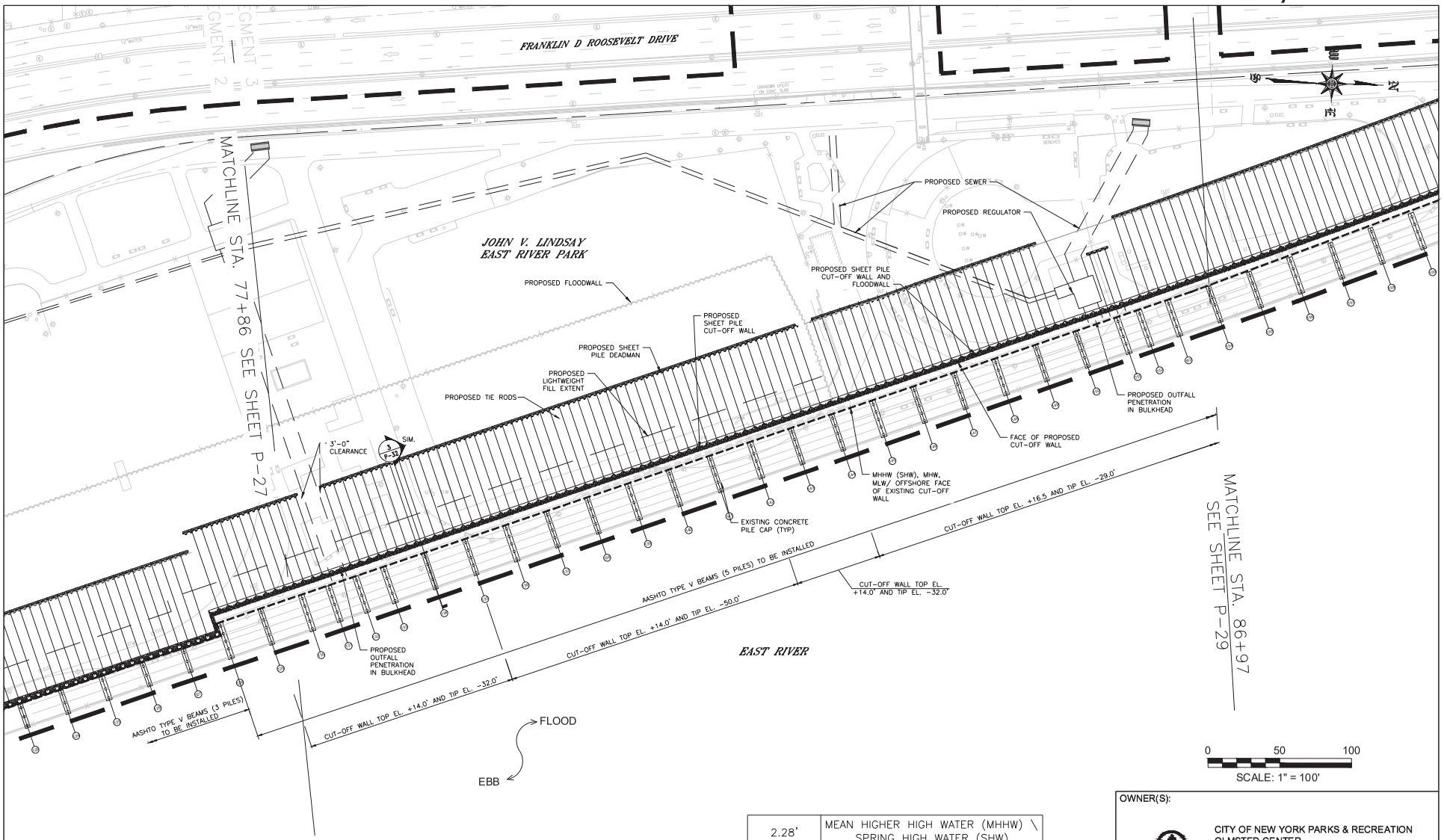

2.28'	MEAN HIGHER HIGH WATER (MHHW) \ SPRING HIGH WATER (SHW)
1.96'	MEAN HIGH WATER (MHW)
0'	NAVD88(1988)
−2.57'	MEAN LOW WATER (MLW)
TIDAL DATA	

LEGEND:

LIMIT OF WORK

LIMIT OF TYPICAL TIDAL INFLUENCE (VARIES)

PROPOSED COMB. SEWER

OWNER(S):

CITY OF NEW YORK PARKS & RECREATION
OLMSTED CENTER
FLUSHING MEADOWS CORONA PARK
FLUSHING, NEW YORK 11368

IN: EAST RIVER AT: MONTGOMERY STREET TO CAPT. PATRICK J. BROWN WALK
TOWN: NEW YORK STATE: NEW YORK
APPLICATION BY: NYC DEPARTMENT OF DESIGN AND CONSTRUCTION

WATERWAY: EAST RIVER
DATUM: NORTH AMERICAN VERTICAL DATUM 1988 (NAVD88)

EAST SIDE COASTAL RESILIENCY PROJECT

DATE: 11/15/2019 REV.: 1 SHEET NO 28 OF 66

ESPLANADE STRUCTURAL PLAN - REACH I

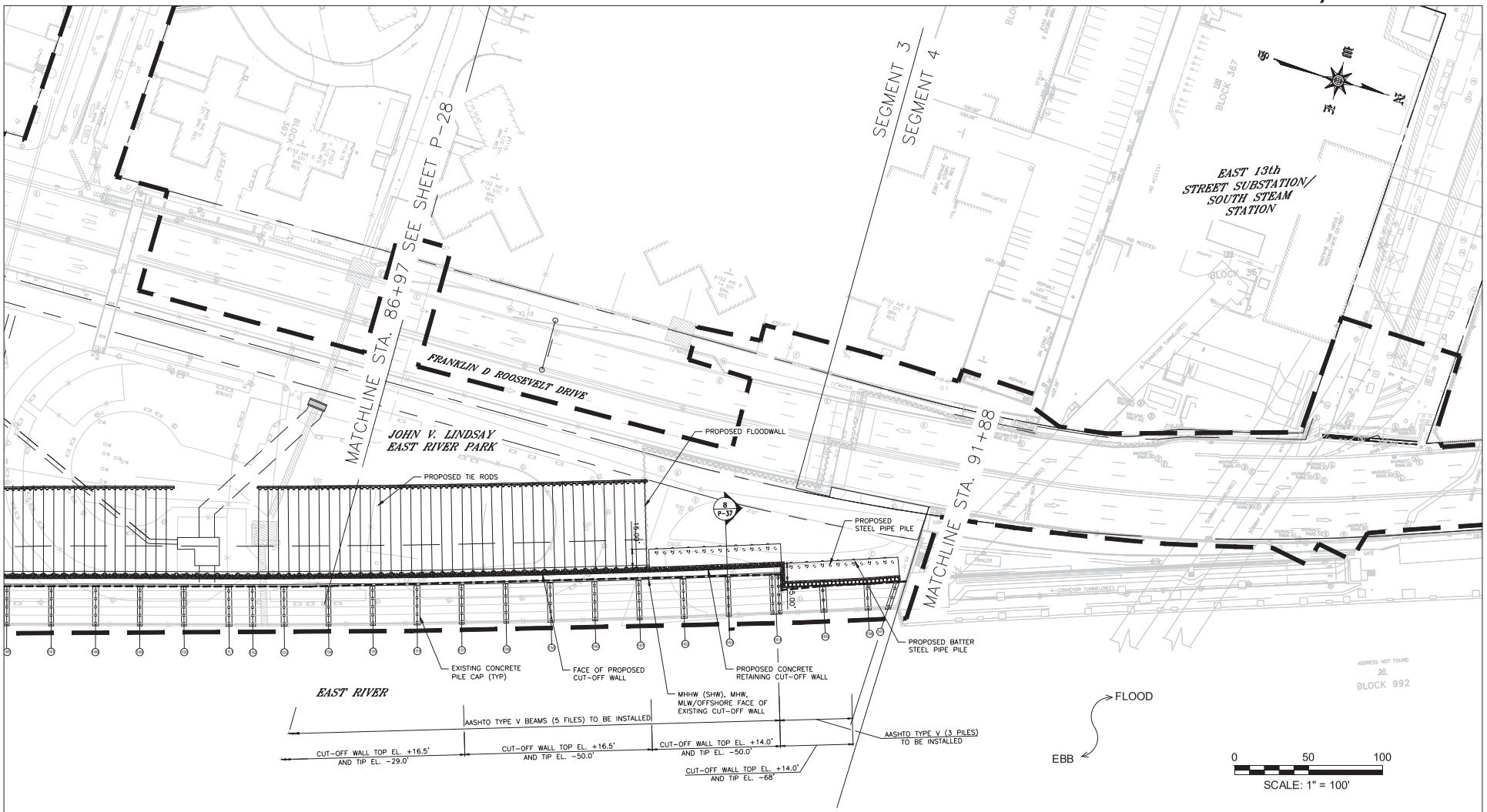

2.28'	MEAN HIGHER HIGH WATER (MHHW) \ SPRING HIGH WATER (SHW)
1.96'	MEAN HIGH WATER (MHW)
0'	NAVD88(1988)
-2.57'	MEAN LOW WATER (MLW)
TIDAL DATA	

LEGEND:

- LIMIT OF WORK
- LIMIT OF TYPICAL TIDAL INFLUENCE (VARIES)
- PROPOSED COMB. SEWER

OWNER(S):

CITY OF NEW YORK PARKS & RECREATION
OLMSTED CENTER
FLUSHING MEADOWS CORONA PARK
FLUSHING, NEW YORK 11368

IN: EAST RIVER AT: MONTGOMERY STREET TO CAPT. PATRICK J. BROWN WALK
TOWN: NEW YORK STATE: NEW YORK
APPLICATION BY: NYC DEPARTMENT OF DESIGN AND CONSTRUCTION

WATERWAY:	DATUM:
EAST RIVER	NORTH AMERICAN VERTICAL DATUM 1988 (NAVD88)

EAST SIDE COASTAL RESILIENCY PROJECT

DATE: 11/15/2019	REV.: 1	SHEET NO 29 OF 66

ESPLANADE STRUCTURAL PLAN - REACH J

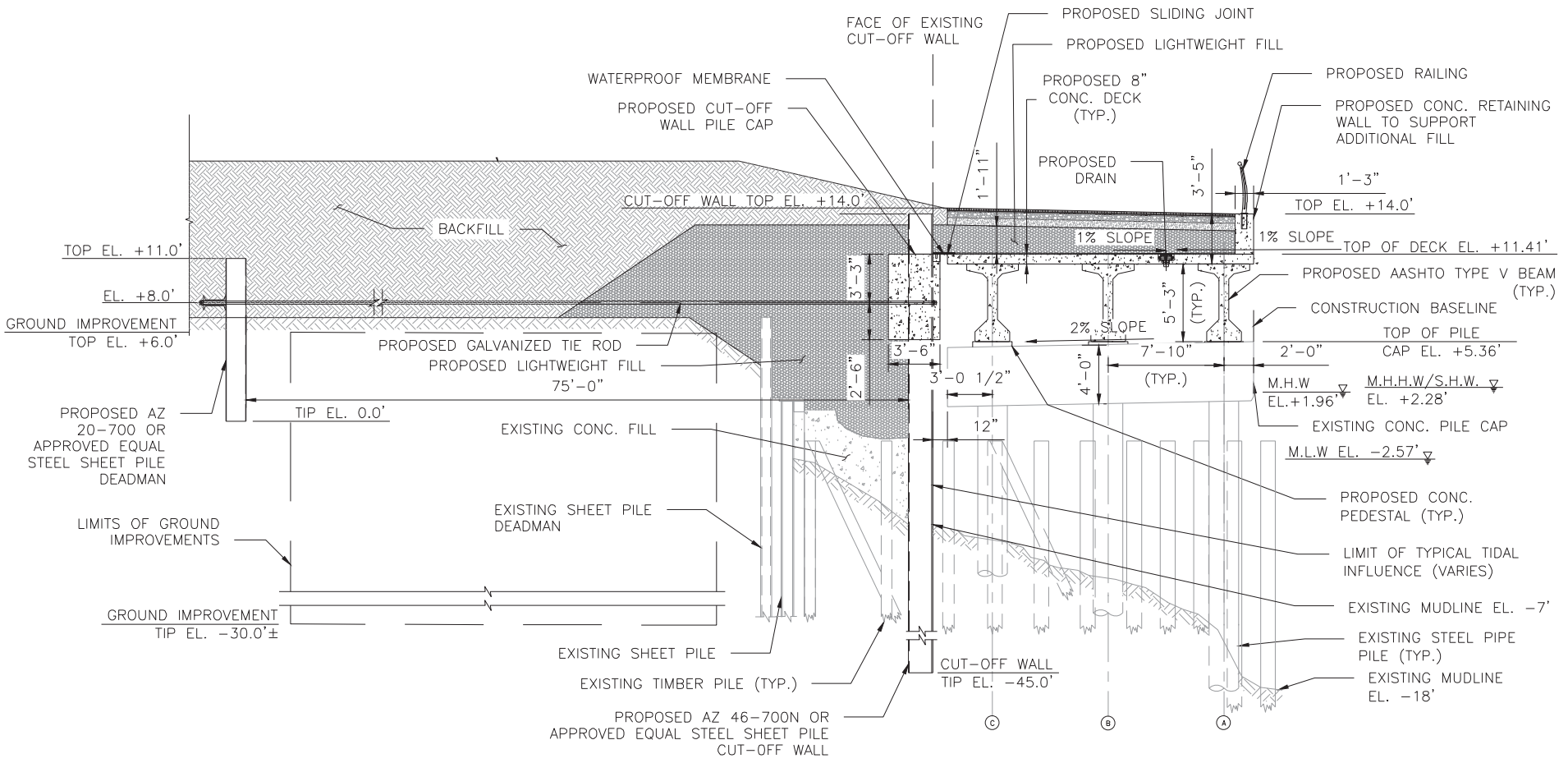

PROPOSED ESPLANADE PLATFORM, PRESTRESSED CONCRETE TYPE V BEAMS ON EXISTING STRUCTURE (3 PILES)

1 P-22 SCALE 3/32" = 1'-0"

P-23
P-25

3/32"=1'-0"

0 5 20 FT.

OWNER(S):

CITY OF NEW YORK PARKS & RECREATION
OLMSTED CENTER
FLUSHING MEADOWS CORONA PARK
FLUSHING, NEW YORK 11368

IN: EAST RIVER AT: MONTGOMERY STREET TO CAPT. PATRICK J. BROWN WALK
TOWN: NEW YORK STATE: NEW YORK
APPLICATION BY: NYC DEPARTMENT OF DESIGN AND CONSTRUCTION

WATERWAY: EAST RIVER
DATUM: NORTH AMERICAN VERTICAL DATUM 1988 (NAVD88)

EAST SIDE COASTAL RESILIENCY PROJECT

DATE: 11/15/2019 REV.: 1 SHEET NO 30 OF 66

PROPOSED CROSS SECTION

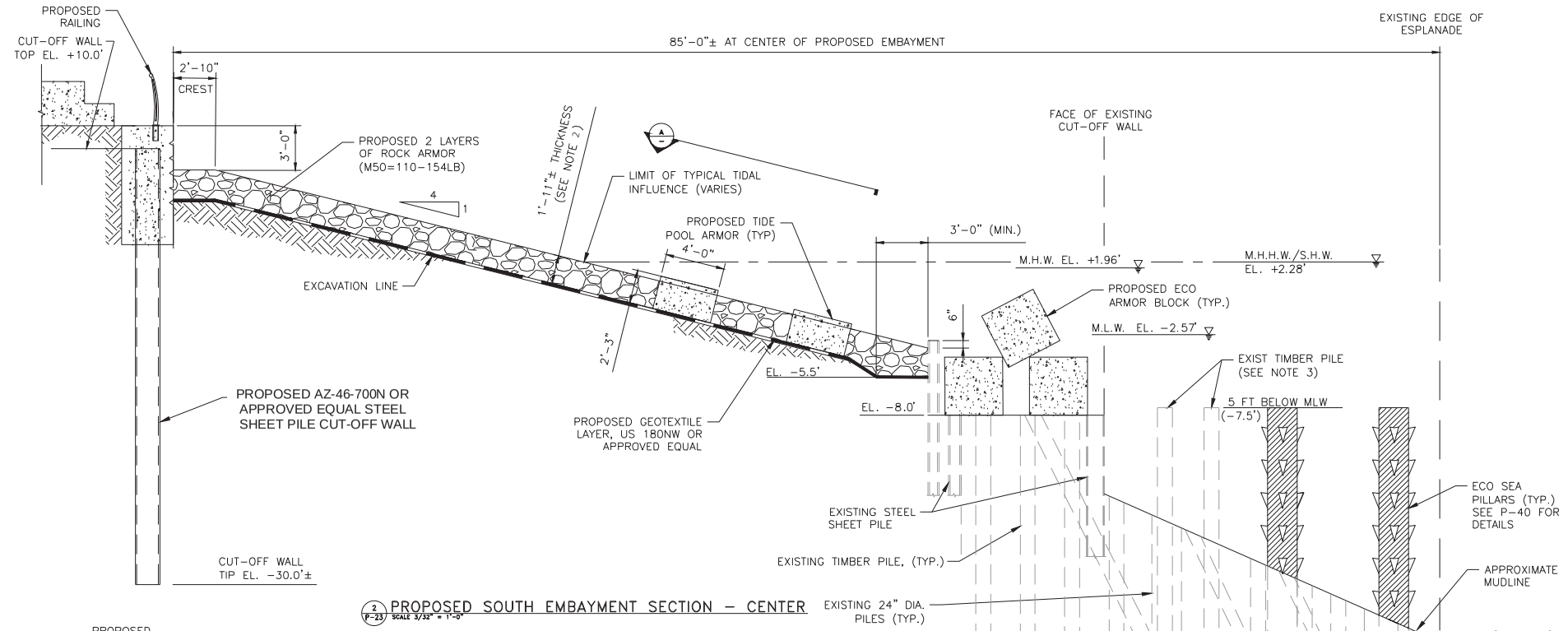

2 P-23 PROPOSED SOUTH EMBAYMENT SECTION – CENTER SCALE 3/32" = 1'-0"

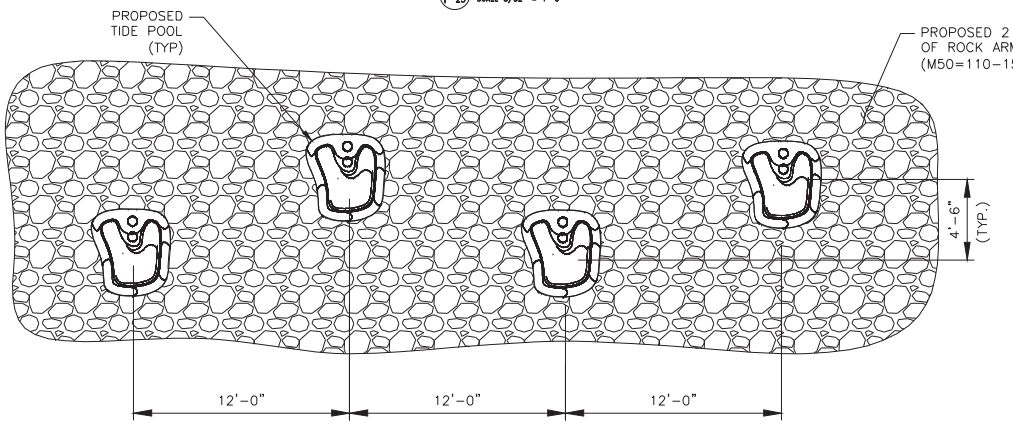

A PARTIAL PLAN A SCALE 3/32" = 1'-0"

NOTES:

1. SEE SHEETS 63-66 FOR ADDITIONAL DETAILS ON AREA, FILL VOLUME, AND CUT VOLUME ASSOCIATED WITH PROPOSED EMBAYMENT.
2. CONSTRUCTION TOLERANCES FOR RIP-RAP LAYERS SHALL NOT EXCEED: ARMOR LAYER: +8" TO -8" DEVIATION FROM PROPOSED THICKNESS.
3. EXISTING TIMBER PILES AROUND PROPOSED ECO-CONC ARMOR AND EXISTING STEEL PIPE PILES SHALL BE CUT-OFF ABOVE THE MUDLINE, APPROXIMATELY 5FT BELOW MLW.
4. BATHYMETRY IS APPROXIMATE BETWEEN THE TOE AND EXISTING ESPLANADE DUE TO A LACK OF DATA. CONTRACTOR NEEDS TO CONFIRM PRIOR TO CONSTRUCTION

3/32"=1'-0" 0 5 20 FT.

OWNER(S):

CITY OF NEW YORK PARKS & RECREATION
OLMSTED CENTER
FLUSHING MEADOWS CORONA PARK
FLUSHING, NEW YORK 11368

IN: EAST RIVER AT: MONTGOMERY STREET TO CAPT. PATRICK J. BROWN WALK
TOWN: NEW YORK STATE: NEW YORK
APPLICATION BY: NYC DEPARTMENT OF DESIGN AND CONSTRUCTION

WATERWAY: EAST RIVER
DATUM: NORTH AMERICAN VERTICAL DATUM 1988 (NAVD88)

EAST SIDE COASTAL RESILIENCY PROJECT

DATE: 11/15/2019 REV.: 1 SHEET NO 31 OF 66

PROPOSED CROSS SECTION - PROPOSED SOUTH EMBAYMENT

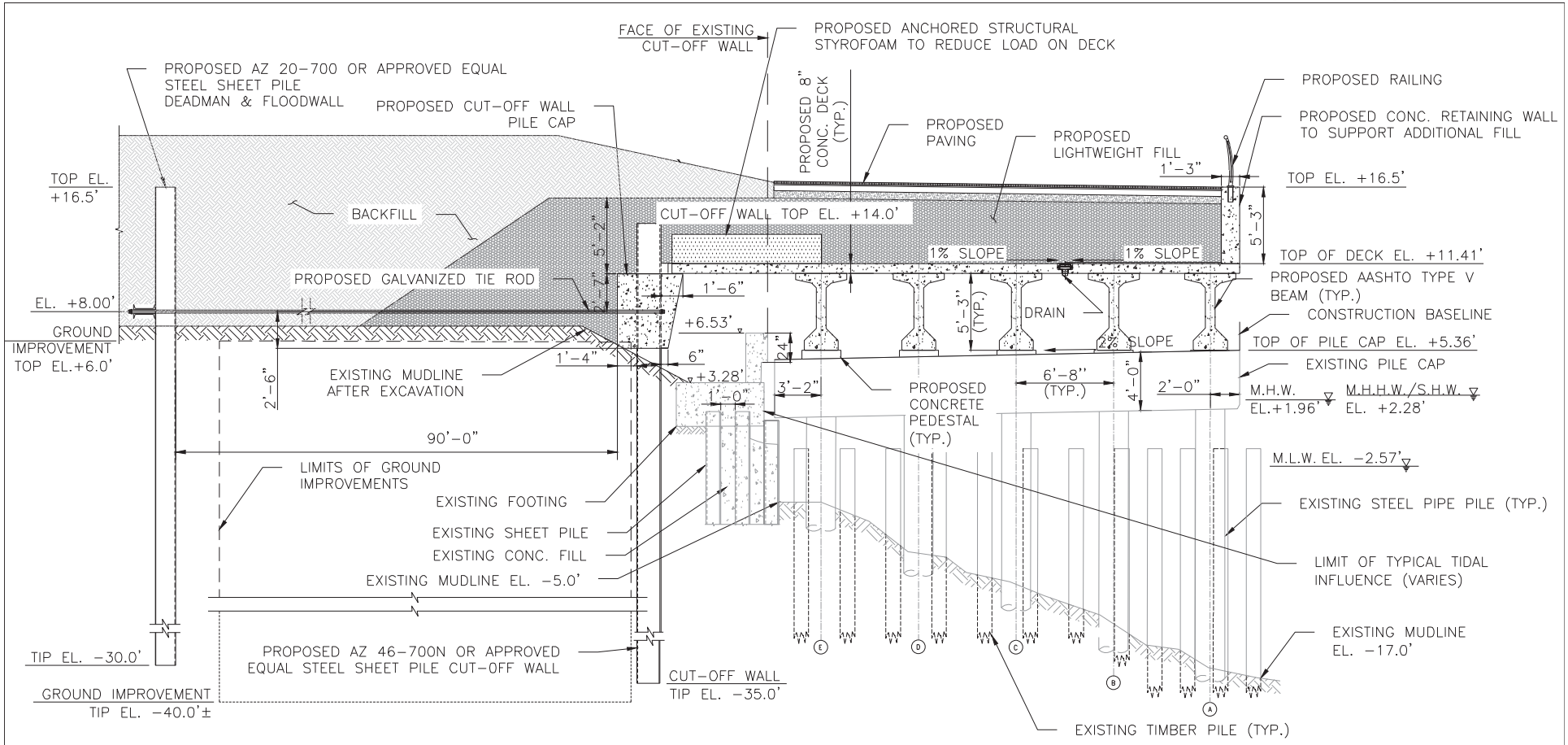

PROPOSED ESPLANADE PLATFORM,
PRESTRESSED CONCRETE TYPE V BEAMS ON EXISTING STRUCTURE – (3 PILES)

3/P-23 SCALE : 3/32"=1'-0"

P-24
P-25
P-26
P-27
P-28
P-29

0 5 20 FT.

3/32"=1'-0"

OWNER(S):

CITY OF NEW YORK PARKS & RECREATION
OLMSTED CENTER
FLUSHING MEADOWS CORONA PARK
FLUSHING, NEW YORK 11368

IN: EAST RIVER AT: MONTGOMERY STREET TO CAPT. PATRICK J. BROWN WALK
TOWN: NEW YORK STATE: NEW YORK
APPLICATION BY: NYC DEPARTMENT OF DESIGN AND CONSTRUCTION

WATERWAY:	DATUM:
EAST RIVER	NORTH AMERICAN VERTICAL DATUM 1988 (NAVD88)

EAST SIDE COASTAL RESILIENCY PROJECT

DATE: 11/15/2019	REV.: 1	SHEET NO 32 OF 66

PROPOSED CROSS SECTION

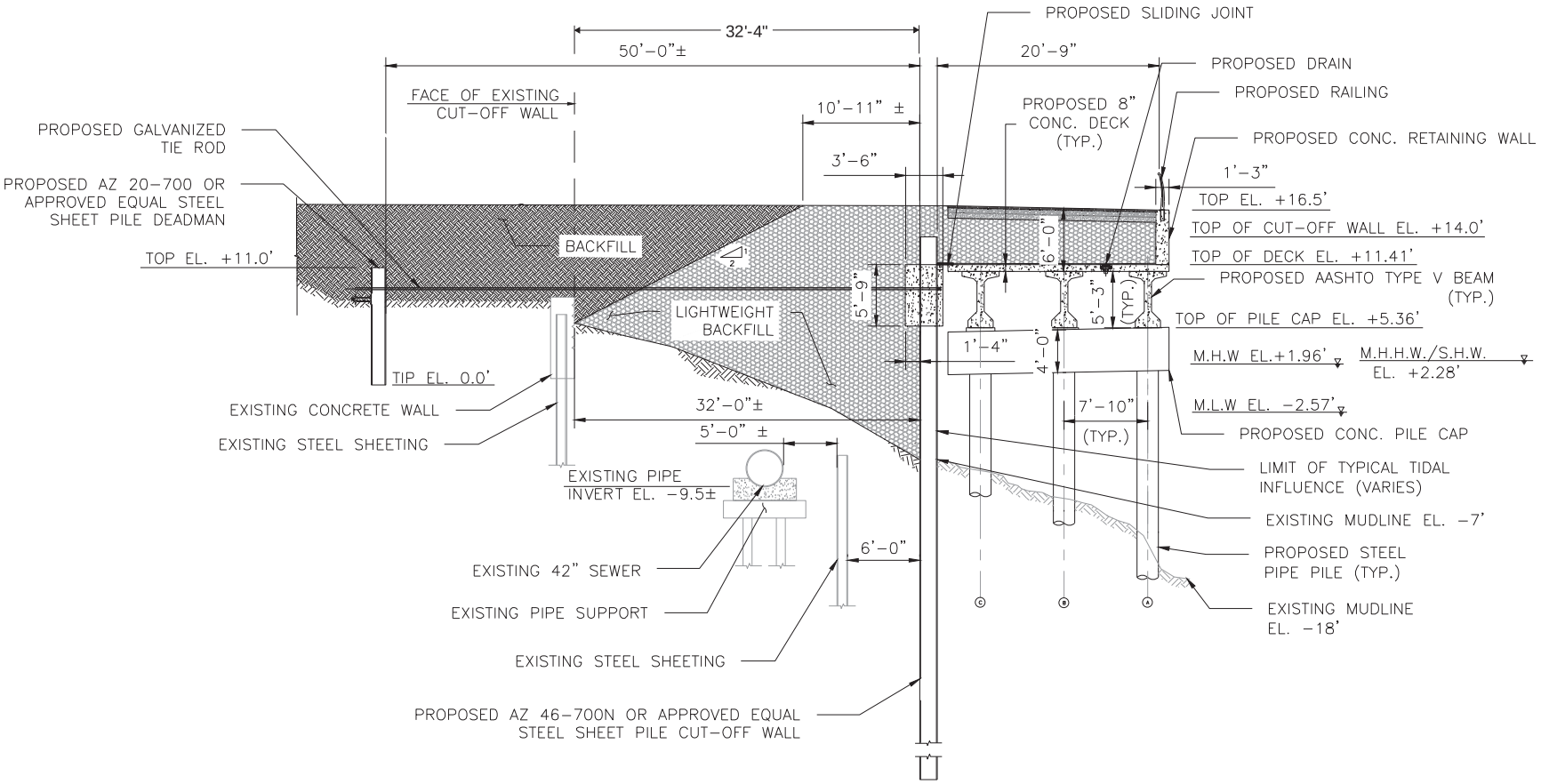

4 P-25 FILLING OF EXISTING SOUTH EMBAYMENT SECTION – CENTER
SCALE 1/16" = 1'-0"

1/16"=1'-0" 0 10 20 30 FT.

NOTES:

1. SEE SHEETS 63-66 FOR ADDITIONAL DETAILS ON AREA, FILL VOLUME, AND CUT VOLUME ASSOCIATED WITH EXISTING EMBAYMENT.

OWNER(S):

CITY OF NEW YORK PARKS & RECREATION
OLMSTED CENTER
FLUSHING MEADOWS CORONA PARK
FLUSHING, NEW YORK 11368

IN: EAST RIVER AT: MONTGOMERY STREET TO CAPT. PATRICK J. BROWN WALK
TOWN: NEW YORK STATE: NEW YORK
APPLICATION BY: NYC DEPARTMENT OF DESIGN AND CONSTRUCTION

WATERWAY: EAST RIVER
DATUM: NORTH AMERICAN VERTICAL DATUM 1988 (NAVD88)

EAST SIDE COASTAL RESILIENCY PROJECT

DATE: 11/15/2019 REV.: 1 SHEET NO 33 OF 66

PROPOSED CROSS SECTION - FILLING OF SOUTH EMBAYMENT

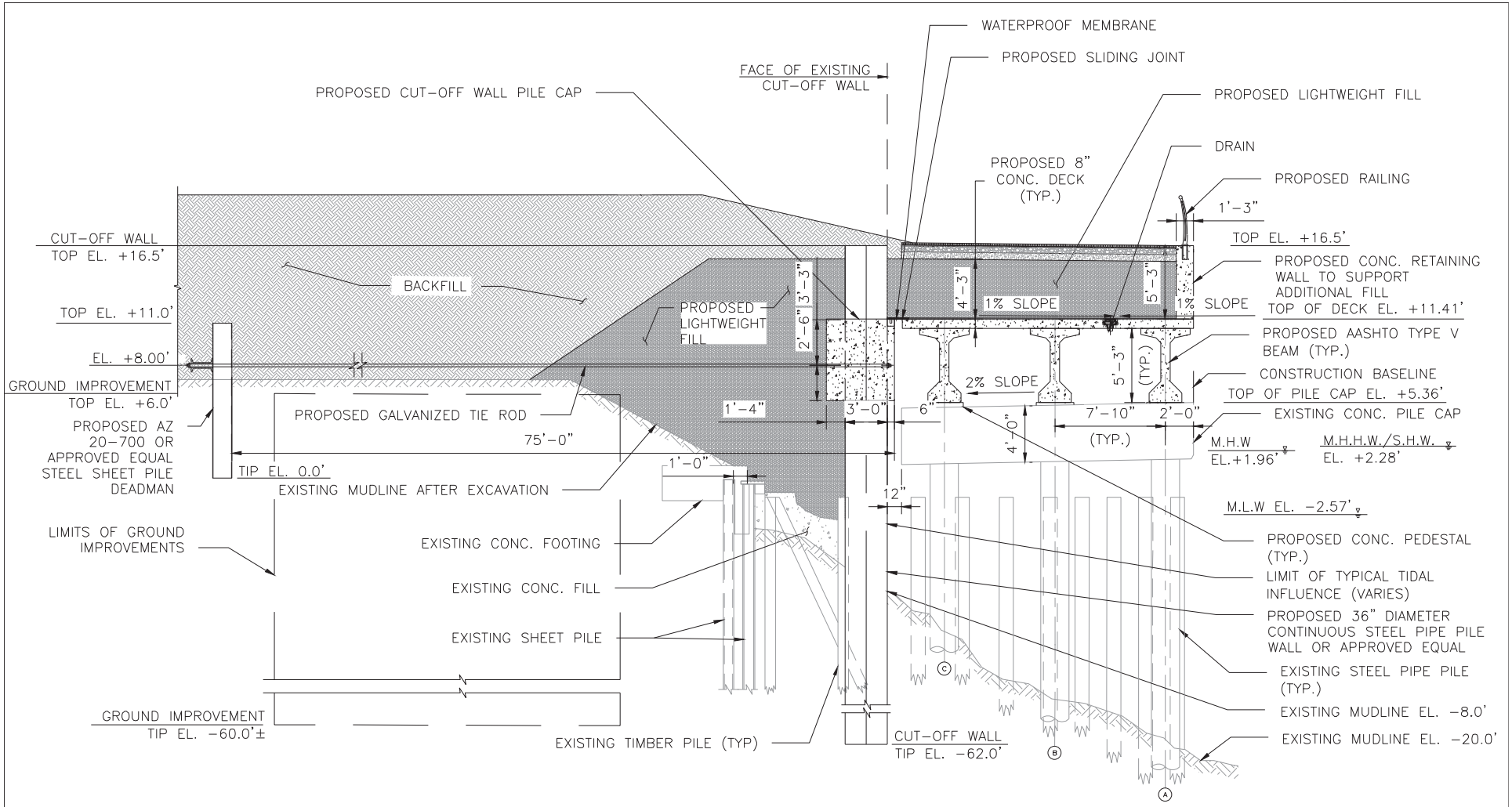

PROPOSED ESPLANADE PLATFORM
ALTERNATE SECTION,
PRESTRESSED CONCRETE TYPE V BEAMS ON EXISTING STRUCTURE (3 PILES)

5 / P-24 SCALE : 3/32"=1'-0"

P-25
P-26
P-27
P-28
P-29

3/32"=1'-0" 0 5 20 FT.

OWNER(S):

CITY OF NEW YORK PARKS & RECREATION
OLMSTED CENTER
FLUSHING MEADOWS CORONA PARK
FLUSHING, NEW YORK 11368

IN: EAST RIVER AT: MONTGOMERY STREET TO CAPT. PATRICK J. BROWN WALK
TOWN: NEW YORK STATE: NEW YORK
APPLICATION BY: NYC DEPARTMENT OF DESIGN AND CONSTRUCTION

WATERWAY: EAST RIVER
DATUM: NORTH AMERICAN VERTICAL DATUM 1988 (NAVD88)

EAST SIDE COASTAL RESILIENCY PROJECT

DATE: 11/15/2019 REV.: 1 SHEET NO 34 OF 66

PROPOSED CROSS SECTION

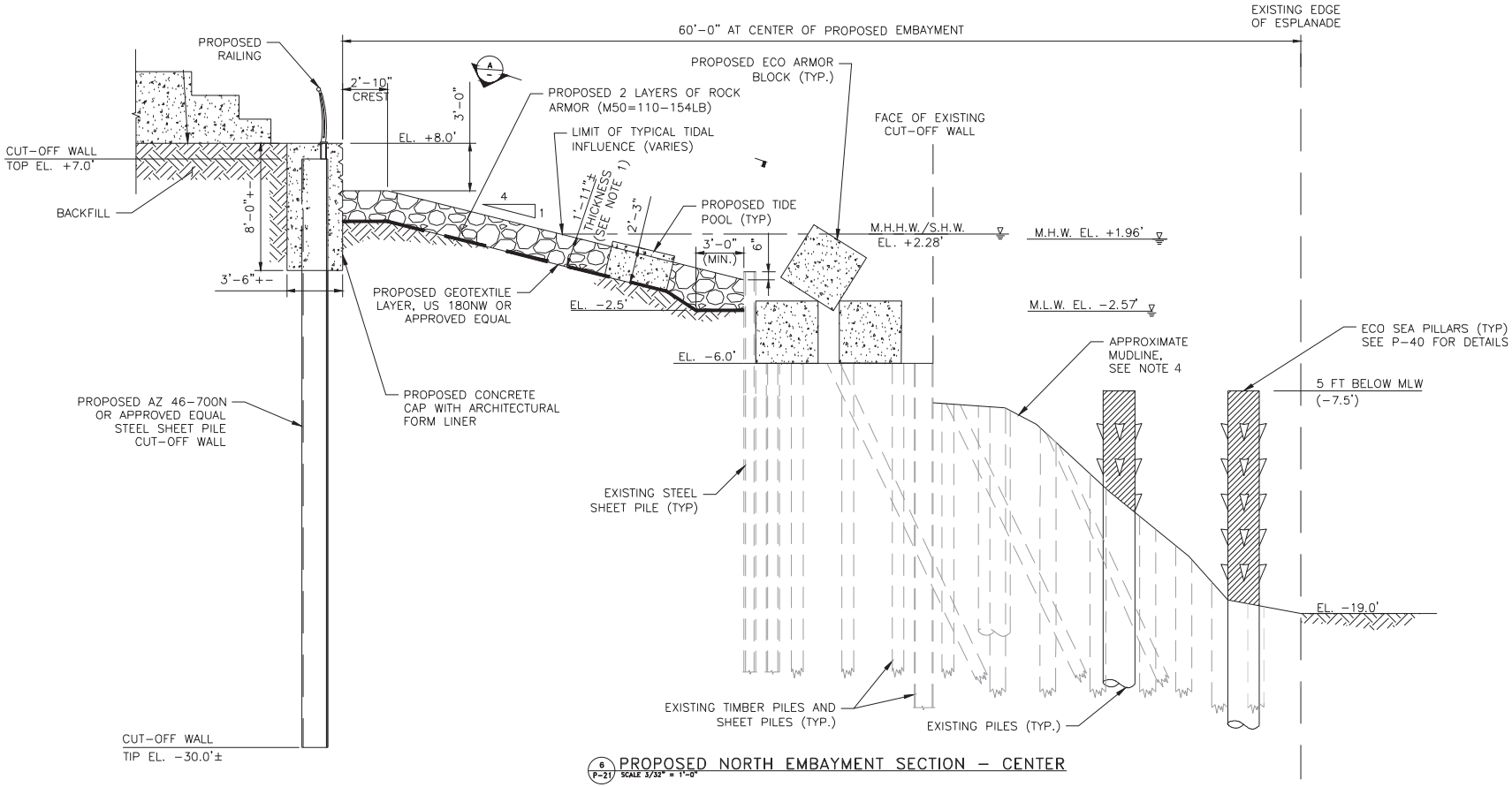

6 P-21 PROPOSED NORTH EMBAYMENT SECTION – CENTER
SCALE 3/32" = 1'-0"

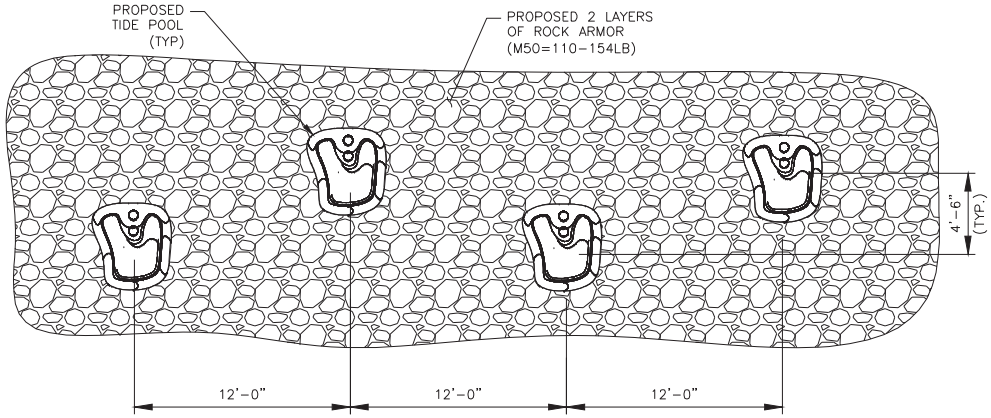

A PARTIAL PLAN A
SCALE 3/32" = 1'-0"

NOTES:

1. SEE SHEETS 63-66 FOR ADDITIONAL DETAILS ON AREA, FILL VOLUME, AND CUT VOLUME ASSOCIATED WITH PROPOSED EMBAYMENT.
2. CONSTRUCTION TOLERANCES FOR RIP-RAP LAYERS SHALL NOT EXCEED: ARMOR LAYER: +8" TO -8" DEVIATION FROM PROPOSED THICKNESS.
3. EXISTING PIPE PILES SHALL BE CUT-OFF ABOVE THE MUDLINE, APPROXIMATELY 5FT BELOW MLW.
4. BATHYMETRY IS APPROXIMATE BETWEEN THE TOE AND EXISTING ESPLANADE. CONTRACTOR SHALL CONFIRM PRIOR TO CONSTRUCTION.

3/32"=1'-0" 0 5 20 FT.

OWNER(S):

CITY OF NEW YORK PARKS & RECREATION
OLMSTED CENTER
FLUSHING MEADOWS CORONA PARK
FLUSHING, NEW YORK 11368

IN: EAST RIVER AT: MONTGOMERY STREET TO CAPT. PATRICK J. BROWN WALK
TOWN: NEW YORK STATE: NEW YORK
APPLICATION BY: NYC DEPARTMENT OF DESIGN AND CONSTRUCTION

WATERWAY: EAST RIVER
DATUM: NORTH AMERICAN VERTICAL DATUM 1988 (NAVD88)

EAST SIDE COASTAL RESILIENCY PROJECT

DATE: 11/15/2019 REV.: 1 SHEET NO 35 OF 66

PROPOSED CROSS SECTION - PROPOSED NORTH EMBAYMENT

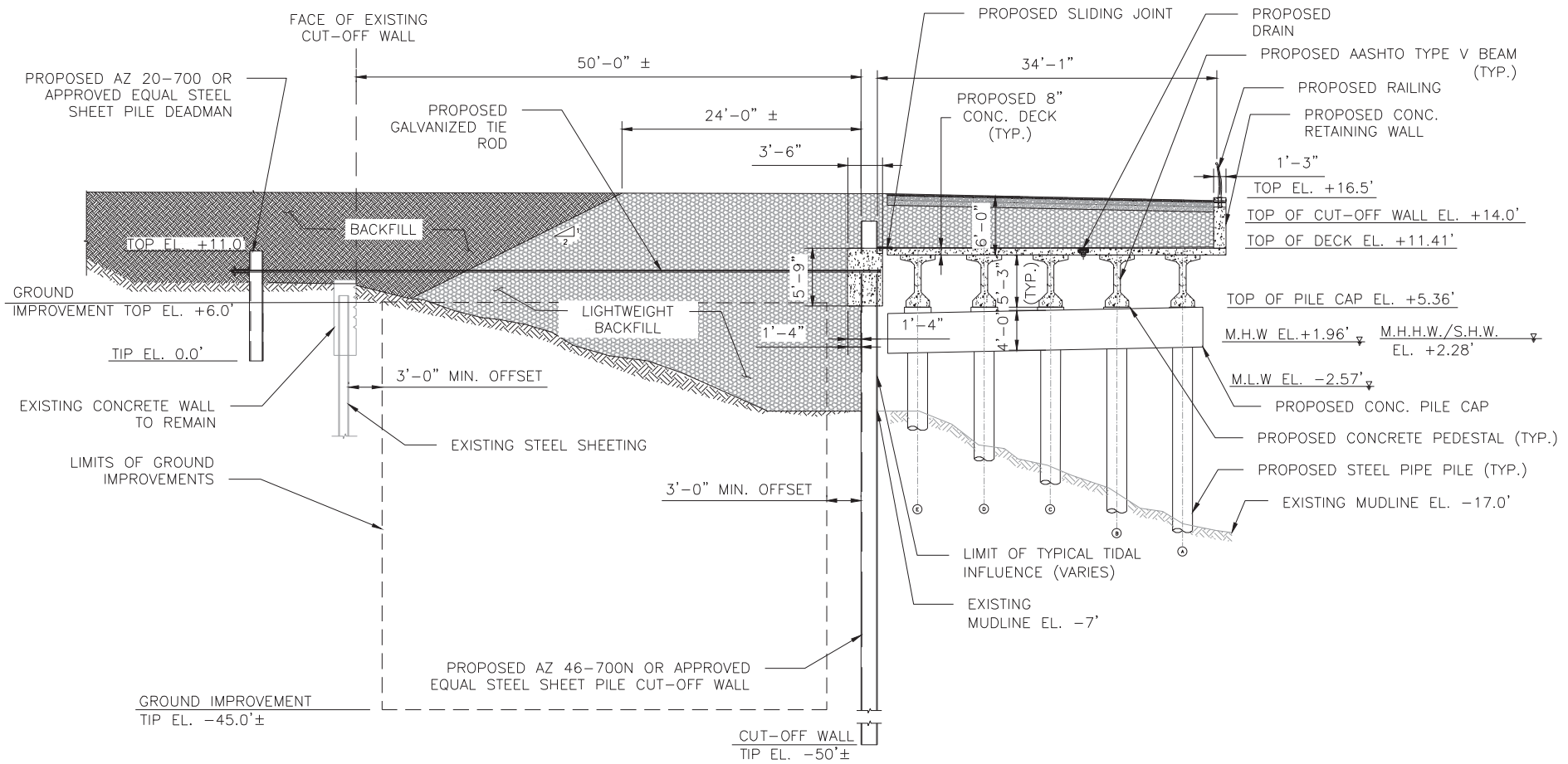

7 / P-27 FILLING OF EXISTING NORTH EMBAYMENT SECTION
SCALE 1/16" = 1'-0"

1/16"=1'-0"

0 10 20 30 FT.

NOTES:

1. SEE SHEETS 63-66 FOR ADDITIONAL DETAILS ON AREA, FILL VOLUME, AND CUT VOLUME ASSOCIATED WITH EXISTING EMBAYMENT.

OWNER(S):

CITY OF NEW YORK PARKS & RECREATION
OLMSTED CENTER
FLUSHING MEADOWS CORONA PARK
FLUSHING, NEW YORK 11368

IN: EAST RIVER AT: MONTGOMERY STREET TO CAPT. PATRICK J. BROWN WALK
TOWN: NEW YORK STATE: NEW YORK
APPLICATION BY: NYC DEPARTMENT OF DESIGN AND CONSTRUCTION

WATERWAY: EAST RIVER
DATUM: NORTH AMERICAN VERTICAL DATUM 1988 (NAVD88)

EAST SIDE COASTAL RESILIENCY PROJECT

DATE: 11/15/2019 REV.: 1 SHEET NO 36 OF 66

PROPOSED CROSS SECTION - FILLING OF NORTH EMBAYMENT

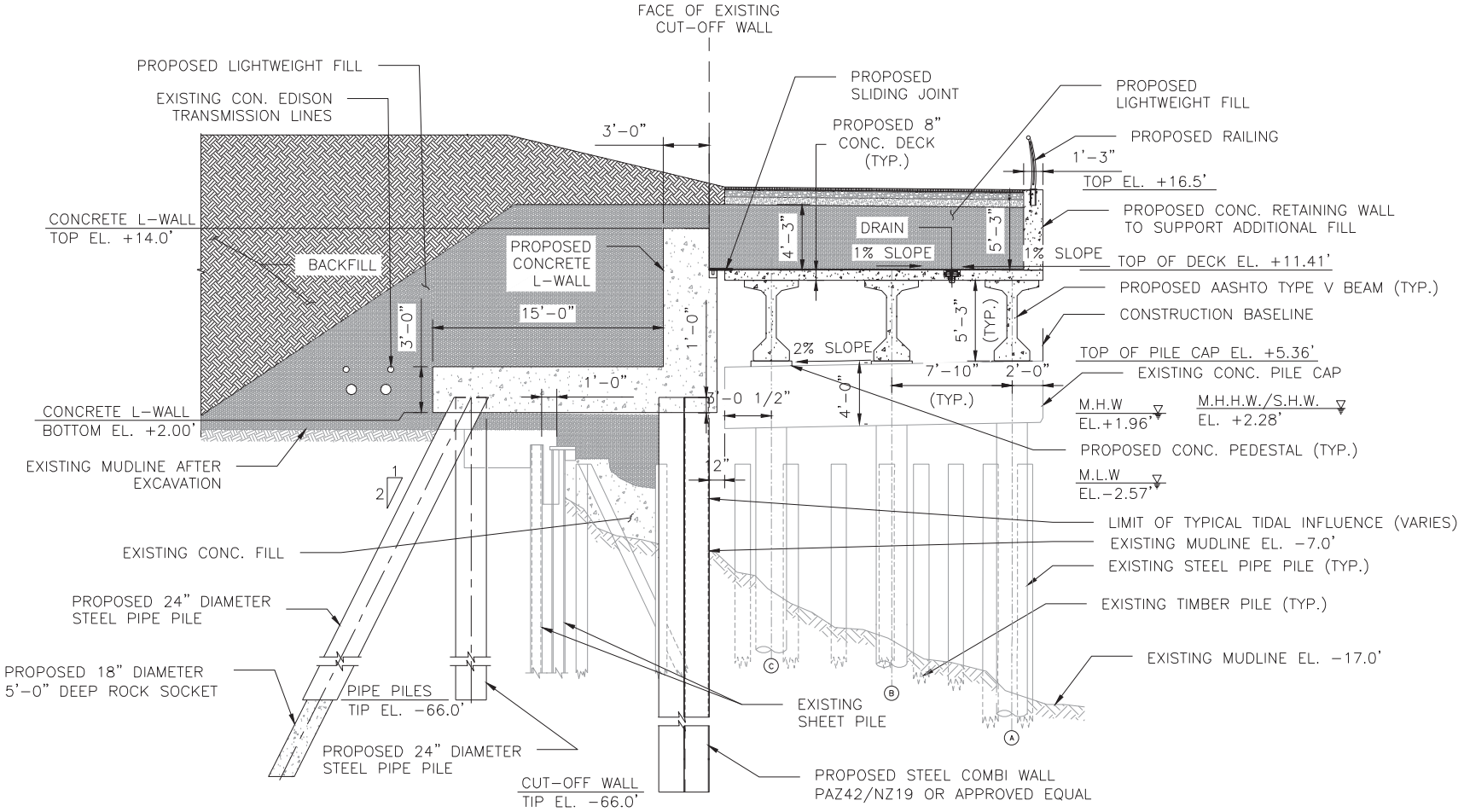

3/32"=1'-0" 0 5 20 FT.

PROPOSED WATERFRONT PLATFORM
ALTERNATE SECTION,
PRESTRESSED CONCRETE TYPE V BEAMS ON EXISTING STRUCTURE (3 PILES)

8 P-29 SCALE : 3/32"=1'-0"

OWNER(S):

CITY OF NEW YORK PARKS & RECREATION
OLMSTED CENTER
FLUSHING MEADOWS CORONA PARK
FLUSHING, NEW YORK 11368

IN: EAST RIVER AT: MONTGOMERY STREET TO CAPT. PATRICK J. BROWN WALK
TOWN: NEW YORK STATE: NEW YORK
APPLICATION BY: NYC DEPARTMENT OF DESIGN AND CONSTRUCTION

WATERWAY:	DATUM:
EAST RIVER	NORTH AMERICAN VERTICAL DATUM 1988 (NAVD88)

EAST SIDE COASTAL RESILIENCY PROJECT

DATE: 11/15/2019	REV.: 1	SHEET NO 37 OF 66

PROPOSED CROSS SECTION

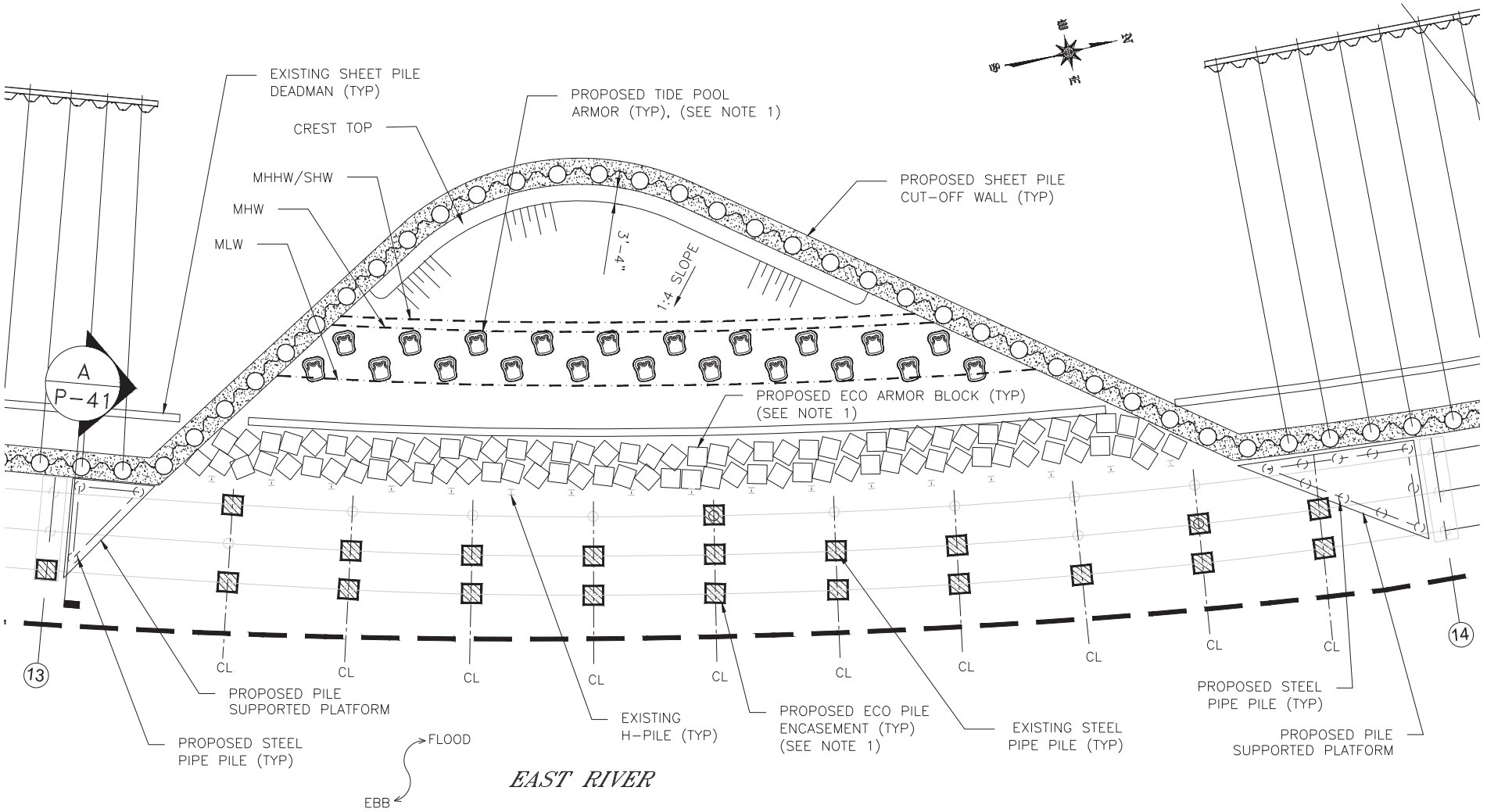

PROPOSED SOUTH EMBAYMENT
1 DETAILED PLAN
SCALE 1"=30'

LEGEND:

LIMITS OF WORK

NOTES:
1. SEE SHEET 40 FOR DETAILS.
2. SEE SHEETS 63-66 FOR ADDITIONAL DETAILS ON AREA, FILL VOLUME, AND CUT VOLUME ASSOCIATED WITH PROPOSED EMBAYMENT.

0 30 60 FT.
1"=30'

OWNER(S):

CITY OF NEW YORK PARKS & RECREATION
OLMSTED CENTER
FLUSHING MEADOWS CORONA PARK
FLUSHING, NEW YORK 11368

IN: EAST RIVER AT: MONTGOMERY STREET TO CAPT. PATRICK J. BROWN WALK
TOWN: NEW YORK STATE: NEW YORK
APPLICATION BY: NYC DEPARTMENT OF DESIGN AND CONSTRUCTION

WATERWAY:	DATUM:
EAST RIVER	NORTH AMERICAN VERTICAL DATUM 1988 (NAVD88)

EAST SIDE COASTAL RESILIENCY PROJECT

DATE: 11/15/2019	REV.: 1	SHEET NO 38 OF 66

PROPOSED SOUTH EMBAYMENT PLAN

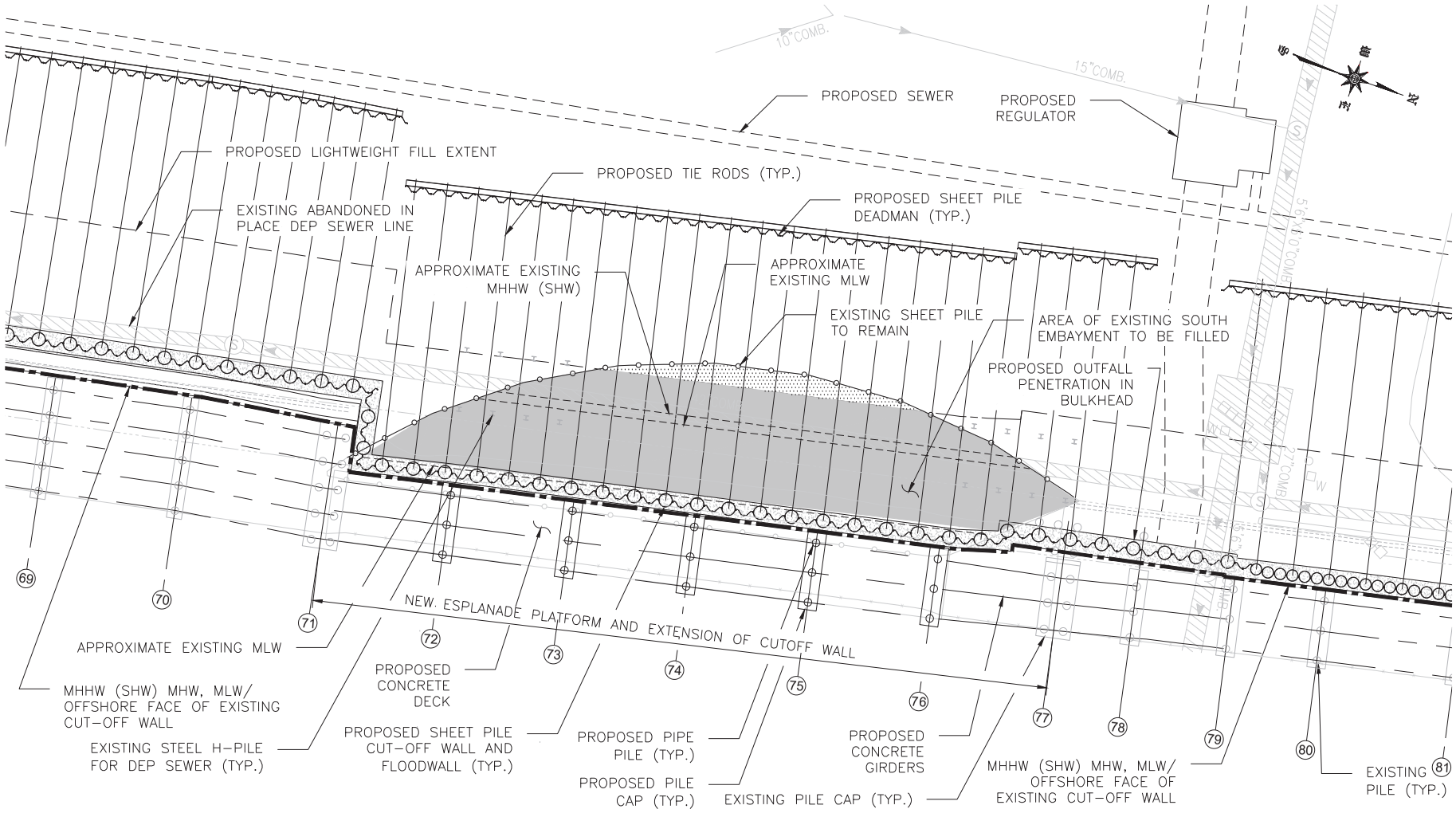

3 FILLING OF EXISTING SOUTH EMBAYMENT DETAILED PLAN
SCALE 1"=40'

LEGEND:

PROPOSED COMB. SEWER

LIMIT OF JURISDICTIONAL WATERS

LIMITS OF LIGHTWEIGHT FILL WITHIN EXISTING EMBAYMENT

LIMITS OF STANDARD FILL WITHIN EXISTING EMBAYMENT

1"=40' 0 40 80 FT.

NOT FOR CONSTRUCTION

OWNER(S):

CITY OF NEW YORK PARKS & RECREATION
OLMSTED CENTER
FLUSHING MEADOWS CORONA PARK
FLUSHING, NEW YORK 11368

IN: EAST RIVER AT: MONTGOMERY STREET TO CAPT. PATRICK J. BROWN WALK
TOWN: NEW YORK STATE: NEW YORK
APPLICATION BY: NYC DEPARTMENT OF DESIGN AND CONSTRUCTION

WATERWAY: EAST RIVER
DATUM: NORTH AMERICAN VERTICAL DATUM 1988 (NAVD88)

EAST SIDE COASTAL RESILIENCY PROJECT

DATE: 11/29/2019 REV.: SHEET 38A OF 66

FILLING OF EXISTING SOUTH EMBAYMENT PLAN

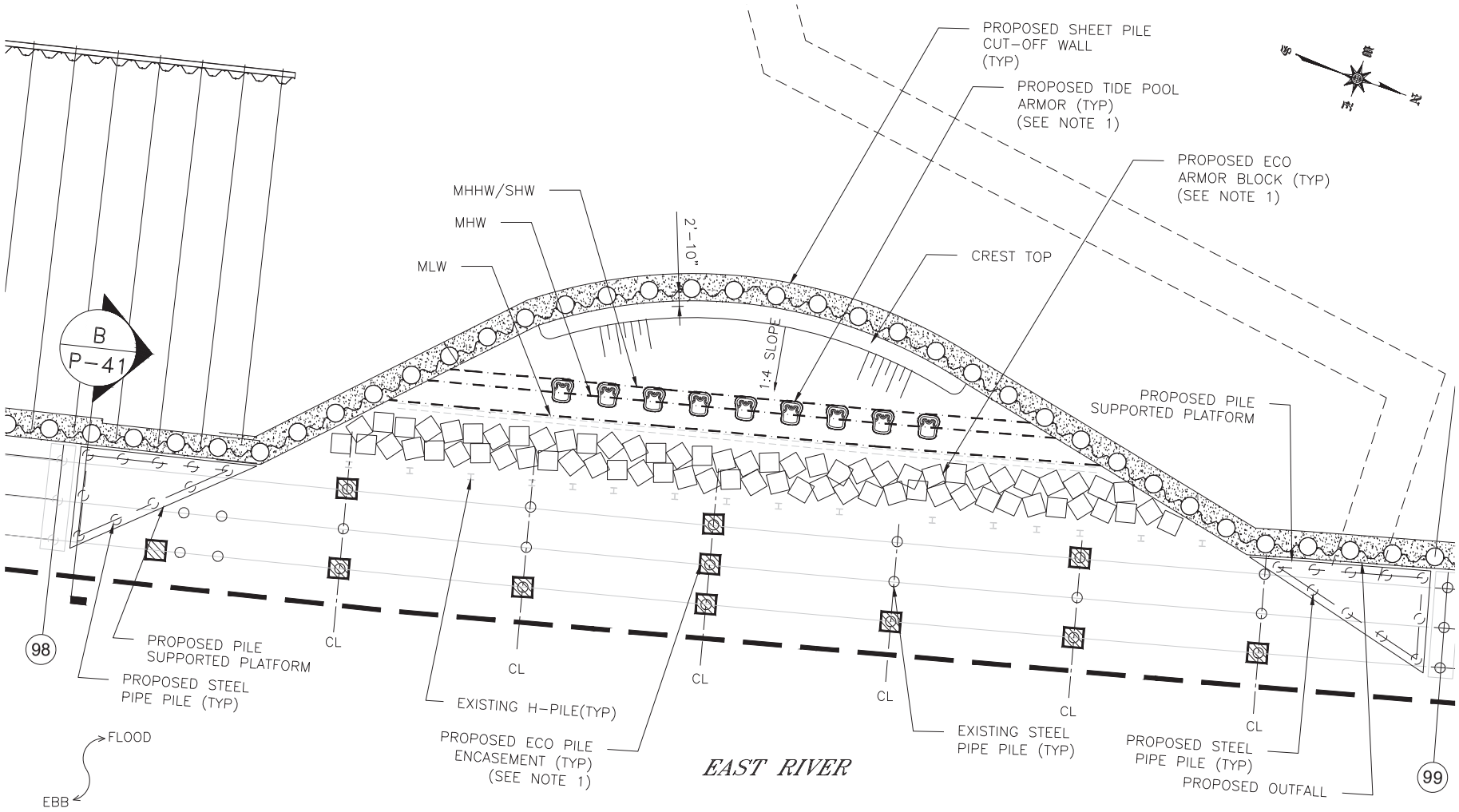

PROPOSED NORTH EMBAYMENT DETAILED PLAN
2 SCALE 1"=30'

LEGEND:

LIMITS OF WORK

PROPOSED COMB. SEWER

NOTES:
1. SEE SHEET 40 FOR DETAILS.
2. SEE SHEETS 63-66 FOR ADDITIONAL DETAILS ON AREA, FILL VOLUME, AND CUT VOLUME ASSOCIATED WITH PROPOSED EMBAYMENT.

0 30 60 FT.
1"=30'

OWNER(S):

CITY OF NEW YORK PARKS & RECREATION
OLMSTED CENTER
FLUSHING MEADOWS CORONA PARK
FLUSHING, NEW YORK 11368

IN: EAST RIVER AT: MONTGOMERY STREET TO CAPT. PATRICK J. BROWN WALK
TOWN: NEW YORK STATE: NEW YORK
APPLICATION BY: NYC DEPARTMENT OF DESIGN AND CONSTRUCTION

WATERWAY:	DATUM:
EAST RIVER	NORTH AMERICAN VERTICAL DATUM 1988 (NAVD88)

EAST SIDE COASTAL RESILIENCY PROJECT

DATE: 11/15/2019	REV.: 1	SHEET NO 39 OF 66

PROPOSED NORTH EMBAYMENT PLAN

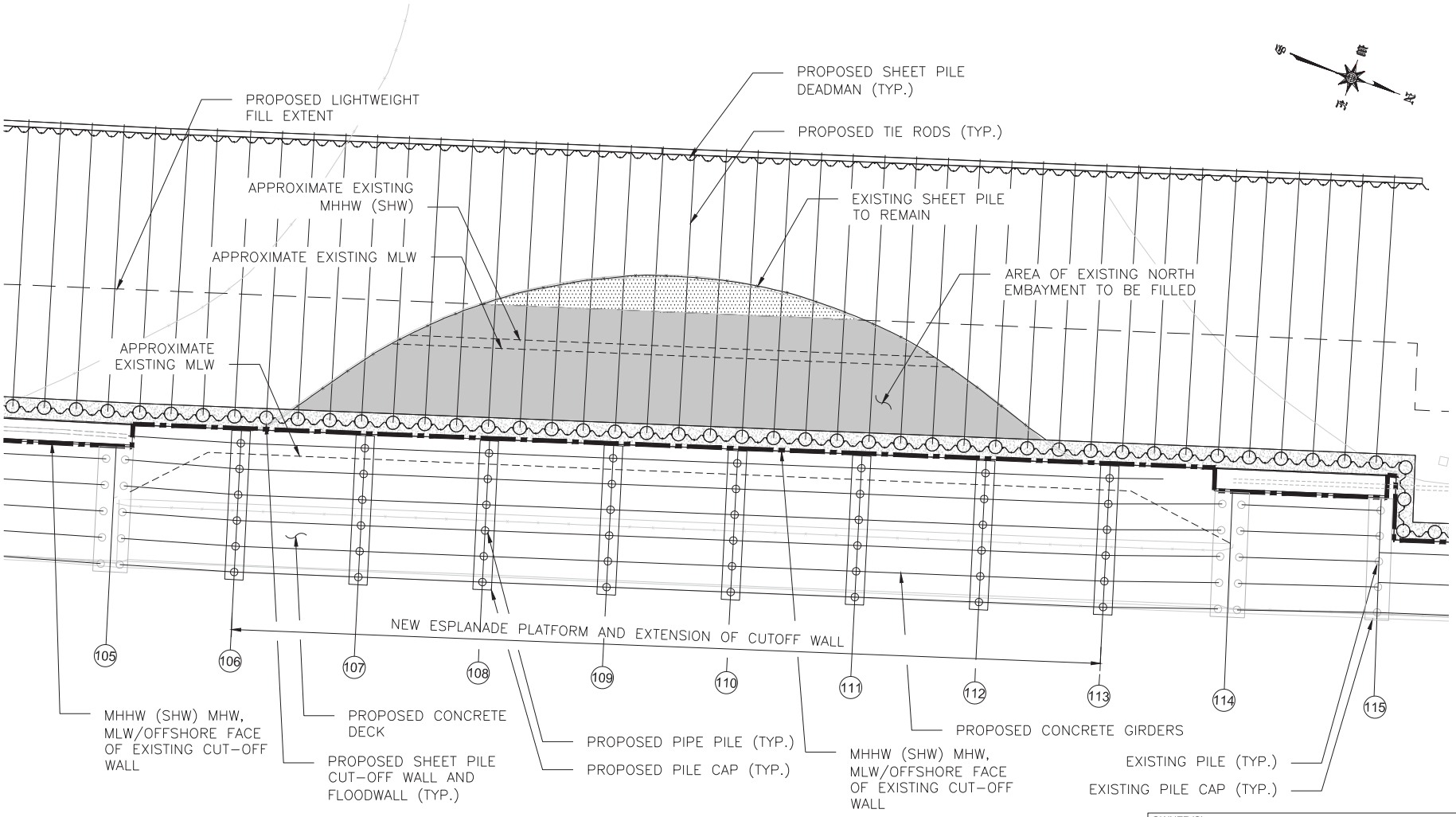

4 FILLING OF EXISTING NORTH EMBAYMENT DETAILED PLAN
SCALE 1"=40'

LEGEND:

PROPOSED COMB. SEWER

LIMIT OF JURISDICTIONAL WATERS

LIMITS OF LIGHTWEIGHT FILL WITHIN EXISTING EMBAYMENT

LIMITS OF STANDARD FILL WITHIN EXISTING EMBAYMENT

1"=40' 0 40 80 FT.

NOT FOR CONSTRUCTION

OWNER(S):

CITY OF NEW YORK PARKS & RECREATION
OLMSTED CENTER
FLUSHING MEADOWS CORONA PARK
FLUSHING, NEW YORK 11368

IN: EAST RIVER AT: MONTGOMERY STREET TO CAPT. PATRICK J. BROWN WALK
TOWN: NEW YORK STATE: NEW YORK
APPLICATION BY: NYC DEPARTMENT OF DESIGN AND CONSTRUCTION

WATERWAY:	DATUM:
EAST RIVER	NORTH AMERICAN VERTICAL DATUM 1988 (NAVD88)

EAST SIDE COASTAL RESILIENCY PROJECT

DATE: 11/29/2019	REV.:	SHEET 39A OF 66

FILLING OF EXISTING NORTH EMBAYMENT PLAN

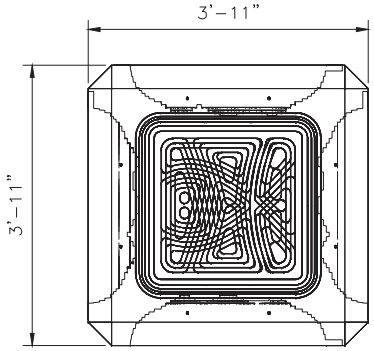

1 PLAN
SCALE 3/8" = 1'-0"
P-38 & 39

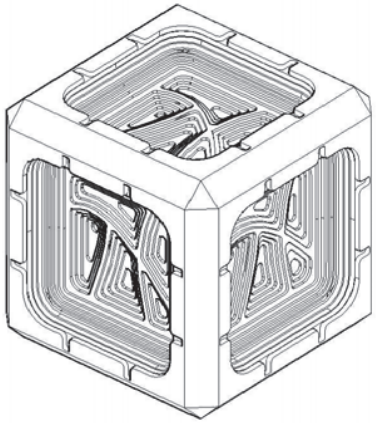

2 ISOMETRIC VIEW
SCALE 3/8" = 1'-0"

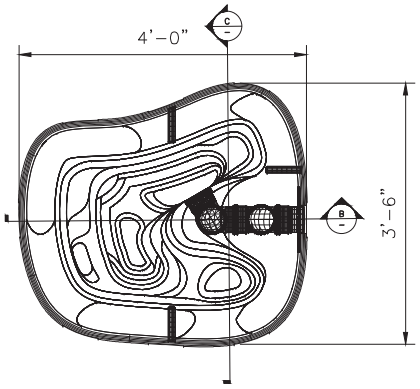

3 PLAN
SCALE 3/8" = 1'-0"
P-38 & 39

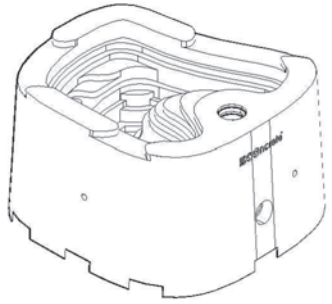

4 ISOMETRIC VIEW
SCALE 3/8" = 1'-0"

ECO ARMOR BLOCKS

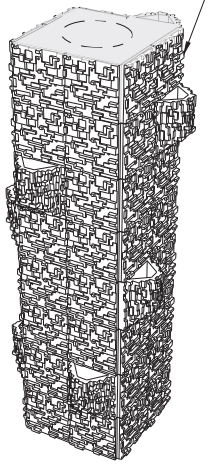

5 ISOMETRIC VIEW
NOT TO SCALE

ECO SEA PILLARS

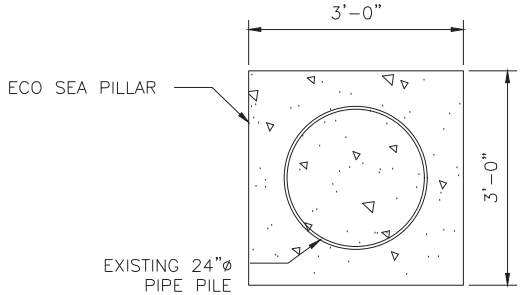

6 PLAN
SCALE 3/8" = 1'-0"
P38 & 39

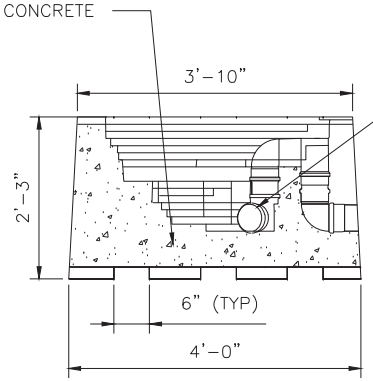

B SECTION
SCALE 3/8" = 1'-0"

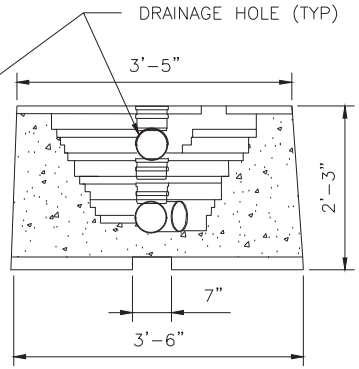

C SECTION
SCALE 3/8" = 1'-0"

TIDAL POOL

3/8"=1'-0" 0 1 5 FT.

1/8"=1'-0" 0 5 10 15 FT.

OWNER(S):

CITY OF NEW YORK PARKS & RECREATION
OLMSTED CENTER
FLUSHING MEADOWS CORONA PARK
FLUSHING, NEW YORK 11368

IN: EAST RIVER AT: MONTGOMERY STREET TO CAPT. PATRICK J. BROWN WALK
TOWN: NEW YORK STATE: NEW YORK
APPLICATION BY: NYC DEPARTMENT OF DESIGN AND CONSTRUCTION

WATERWAY: EAST RIVER
DATUM: NORTH AMERICAN VERTICAL DATUM 1988 (NAVD88)

EAST SIDE COASTAL RESILIENCY PROJECT

DATE: 11/15/2019 REV.: 1 SHEET NO 40 OF 66

EMBAYMENT TYPICAL DETAILS

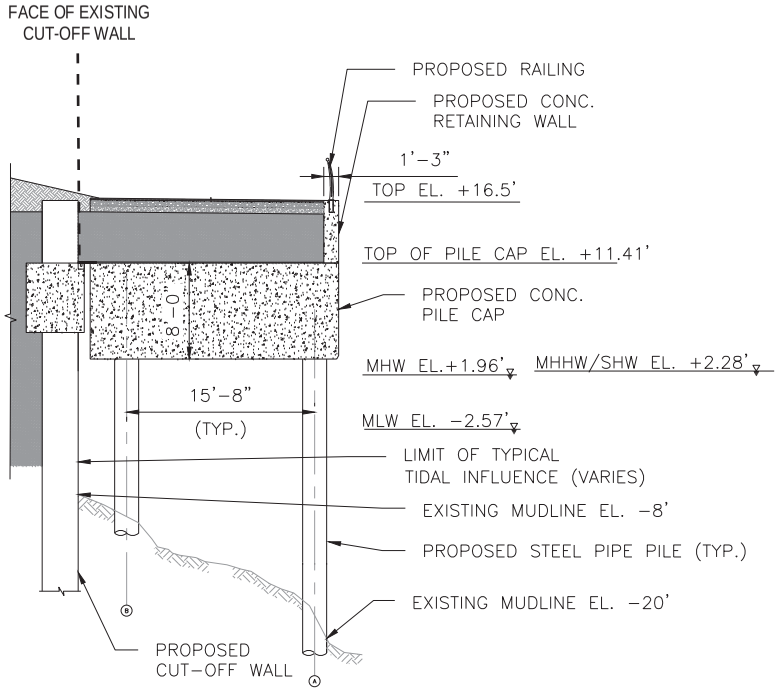

PILE-SUPPORTED PLATFORM
TYPICAL SECTION (2 PILES)
A P-38 SCALE 1/16" = 1'-0"

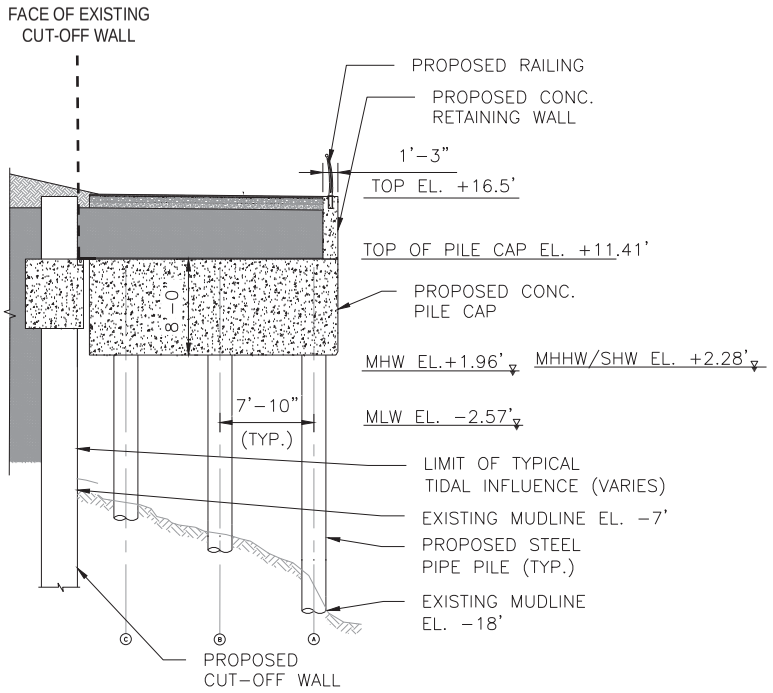

PILE-SUPPORTED PLATFORM
TYPICAL SECTION (3 PILES)
B P-39 SCALE 1/16" = 1'-0"

1/16"=1'-0"

0 10 20 30 FT.

OWNER(S):

CITY OF NEW YORK PARKS & RECREATION
OLMSTED CENTER
FLUSHING MEADOWS CORONA PARK
FLUSHING, NEW YORK 11368

IN: EAST RIVER AT: MONTGOMERY STREET TO CAPT. PATRICK J. BROWN WALK
TOWN: NEW YORK STATE: NEW YORK
APPLICATION BY: NYC DEPARTMENT OF DESIGN AND CONSTRUCTION

WATERWAY: EAST RIVER
DATUM: NORTH AMERICAN VERTICAL DATUM 1988 (NAVD88)

EAST SIDE COASTAL RESILIENCY PROJECT

DATE: 11/15/2019 REV.: 1 SHEET NO 41 OF 66

TYPICAL SECTIONS

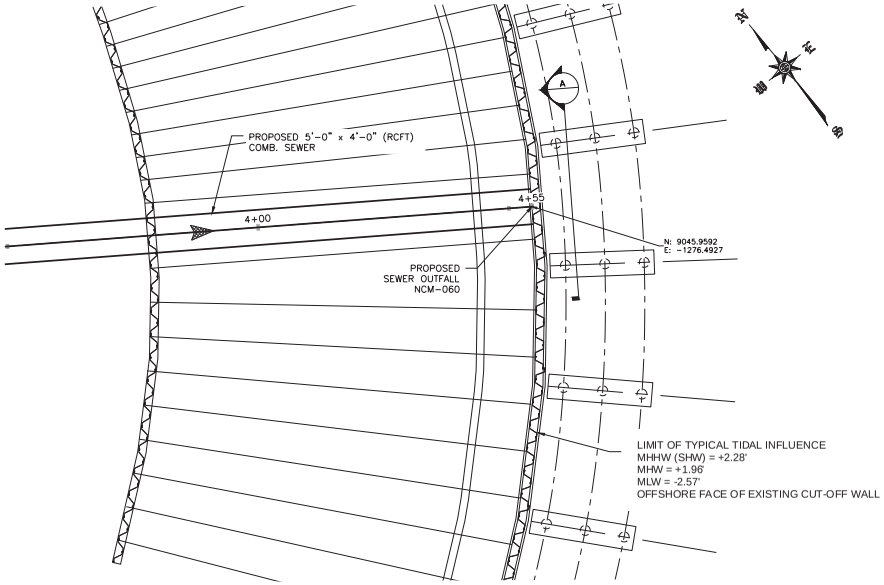

PARTIAL PLAN
SCALE: 1"=10'

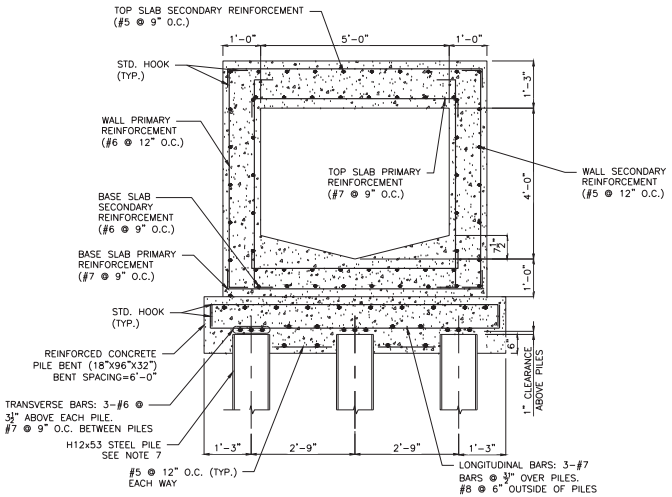

5'-0"W x 4'-0"H COMB. SEWER CROSS SECTION
SCALE: 3/4" = 1'-0"

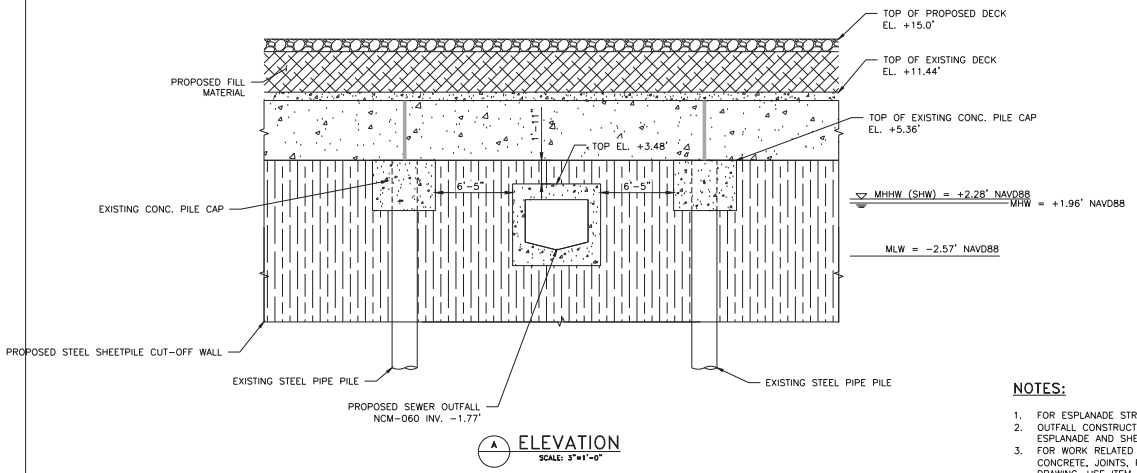

A ELEVATION
SCALE: 3"=1'-0"

NOTES:

1. FOR ESPLANADE STRUCTURAL PLANS SEE SHEETS 22 THROUGH 37.
2. OUTFALL CONSTRUCTION SHALL BE COORDINATED WITH DEMOLITION/CONSTRUCTION OF ESPLANADE AND SHEET PILE CUT-OFF WALL.
3. FOR WORK RELATED TO THE INSTALLATION OF THE DEP SEWER LINE (EXCAVATION, CONCRETE, JOINTS, REBAR, AND BACKFILL TO EXISTING GRADE) SHOWN ON THIS DRAWING, USE ITEM NO. 50.11CS050040.
4. FOR WORK RELATED TO THE END TREATMENTS OF THE SEWER LINE, COFFERDAMS AND OTHER RELATED WORK TO THE SEWER LINE INSTALLATION PERFORMED AT THE SHEET PILE INTERFACE USE ITEM 51.61F053.
5. FOR WORK RELATED THE REINFORCED CONCRETE PILE BENT USE ITEM 73.21AC FOR CONCRETE AND ITEM 73.51AS FOR REINFORCEMENT.
6. FOR DEP SEWER PILES SHOWN ON THIS DRAWING, USE ITEM 70.11SH. STEEL PILES SHALL BE DRIVEN TO ROCK. ROCK DEPTHS ARE SHOWN IN SEWER PROFILE DRAWINGS AND ARE BASED ON DATA COLLECTED DURING THE GEOTECHNICAL EXPLORATION PROGRAM CONDUCTED IN 2019. SUPPLEMENTED WITH HISTORIC SOILS DATA.
7. PLACEMENT OF ANY REQUIRED COFFERDAMS SHALL BE LIMITED TO BELOW THE EXISTING SHADE LINE OF THE ESPLANADE.

OWNER(S):

CITY OF NEW YORK PARKS & RECREATION
OLMSTED CENTER
FLUSHING MEADOWS CORONA PARK
FLUSHING, NEW YORK 11368

IN: EAST RIVER	AT: MONTGOMERY STREET TO CAPT. PATRICK J. BROWN WALK
TOWN: NEW YORK	STATE: NEW YORK
APPLICATION BY: NYC DEPARTMENT OF DESIGN AND CONSTRUCTION	
WATERWAY: EAST RIVER	DATUM: NORTH AMERICAN VERTICAL DATUM 1988 (NAVD88)
EAST SIDE COASTAL RESILIENCY PROJECT	
DATE: 11/15/2019	REV.: 1 / SHEET NO 42 OF 66

OUTFALL NCM-060 (REACH C)

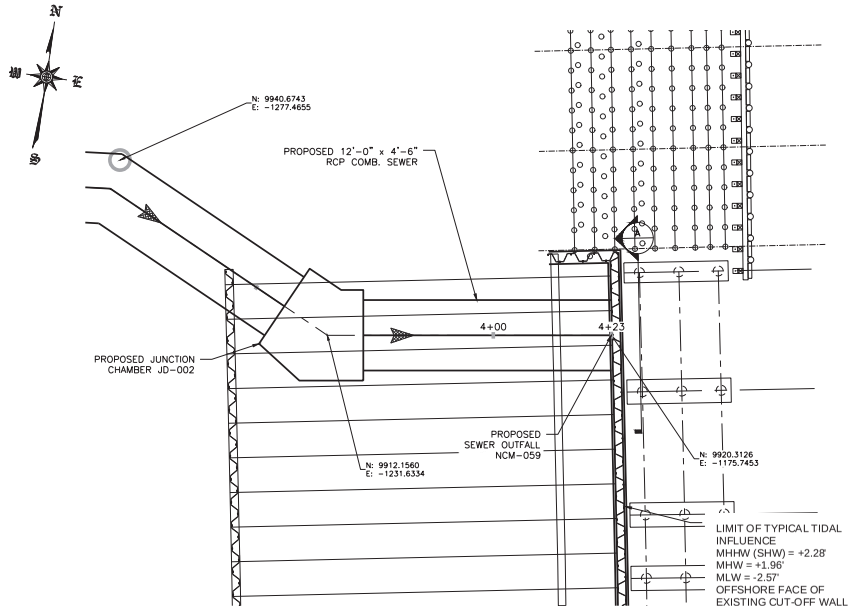

PARTIAL PLAN
SCALE: 1"=10'

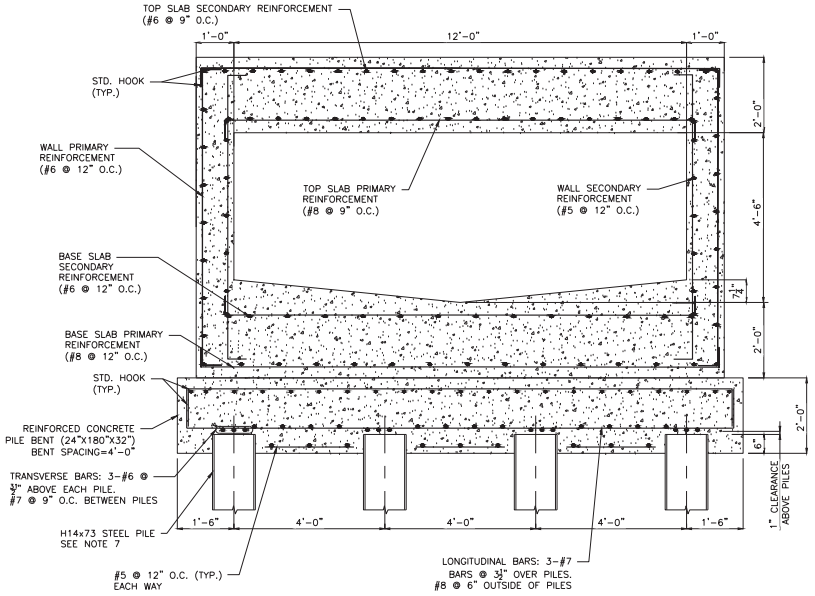

12'-0"W x 4'-6"H COMB. SEWER
CROSS SECTION
SCALE: 3/4" = 1'-0"

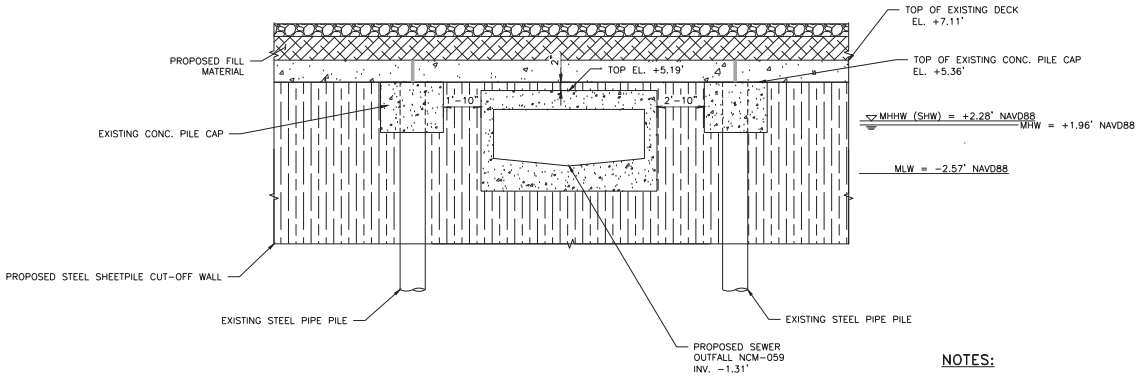

A ELEVATION
SCALE: 3"=1'-0"

NOTES:

1. FOR ESPLANADE STRUCTURAL PLANS SEE SHEETS 22 THROUGH 37.
2. OUTFALL CONSTRUCTION SHALL BE COORDINATED WITH DEMOLITION/CONSTRUCTION OF ESPLANADE AND SHEET PILE CUT-OFF WALL.
3. FOR WORK RELATED TO THE INSTALLATION OF THE DEP SEWER LINE (EXCAVATION, CONCRETE, JOINTS, REBAR, AND BACKFILL TO EXISTING GRADE) SHOWN ON THIS DRAWING, USE ITEM NO. 50.11CS120046.
4. FOR WORK RELATED TO THE END TREATMENTS OF THE SEWER LINE, COFFERDAMS AND OTHER RELATED WORK TO THE SEWER LINE INSTALLATION PERFORMED AT THE SHEET PILE INTERFACE USE ITEM 51.61F053.
5. FOR WORK RELATED THE REINFORCED CONCRETE PILE BENT USE ITEM 73.21AC FOR CONCRETE AND ITEM 73.51AS FOR REINFORCEMENT.
6. FOR DEP SEWER PILES SHOWN ON THIS DRAWING, USE ITEM 70.11SH. STEEL PILES SHALL BE DRIVEN TO ROCK. ROCK DEPTHS ARE SHOWN IN SEWER PROFILE DRAWINGS AND ARE BASED ON DATA COLLECTED DURING THE GEOTECHNICAL EXPLORATION PROGRAM CONDUCTED IN 2019, SUPPLEMENTED WITH HISTORIC SOILS DATA.
7. PLACEMENT OF ANY REQUIRED COFFERDAMS SHALL BE LIMITED TO BELOW THE EXISTING SHADE LINE OF THE ESPLANADE.

OWNER(S):

CITY OF NEW YORK PARKS & RECREATION
OLMSTED CENTER
FLUSHING MEADOWS CORONA PARK
FLUSHING, NEW YORK 11368

IN: EAST RIVER AT: MONTGOMERY STREET TO CAPT. PATRICK J. BROWN WALK
TOWN: NEW YORK STATE: NEW YORK
APPLICATION BY: NYC DEPARTMENT OF DESIGN AND CONSTRUCTION

WATERWAY:	DATUM:
EAST RIVER	NORTH AMERICAN VERTICAL DATUM 1988 (NAVD88)

EAST SIDE COASTAL RESILIENCY PROJECT

DATE: 11/15/2019	REV.: 1	SHEET NO 43 OF 66

OUTFALL NCM-059 (REACH D)

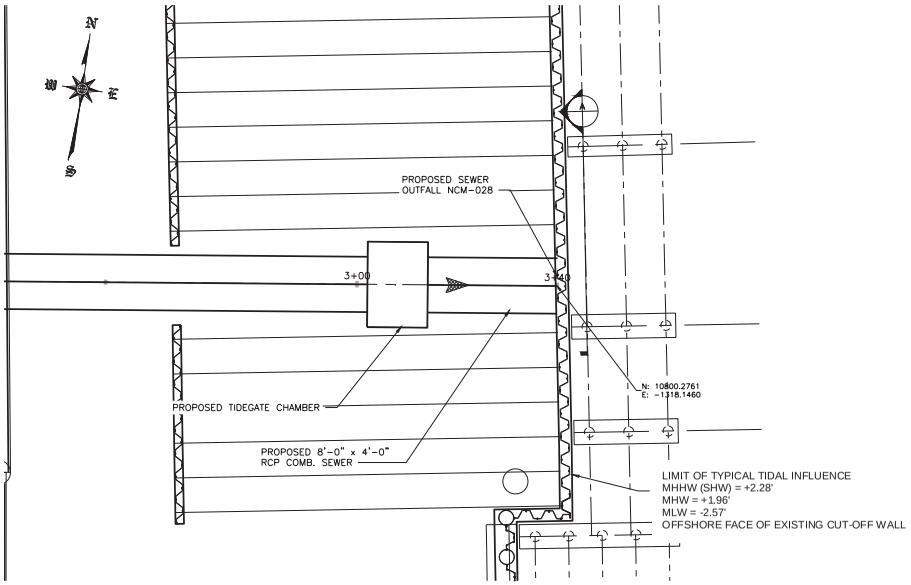

PARTIAL PLAN
SCALE: 1"=10'

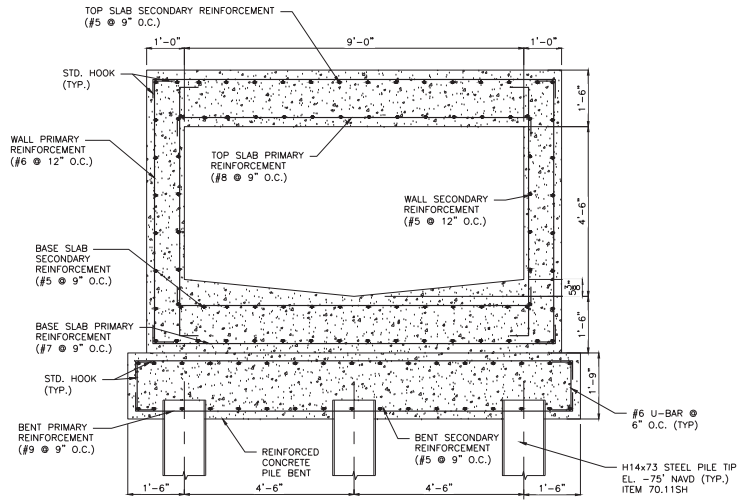

8'-0"W x 4'-0"H COMB. SEWER CROSS SECTION
SCALE: 3/4" = 1'-0"

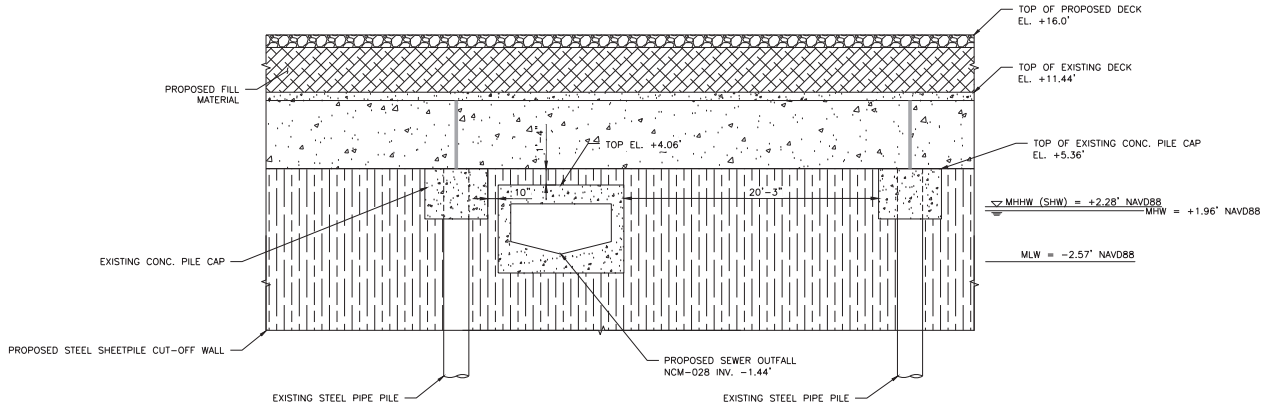

A ELEVATION
SCALE: 3"=1'-0"

NOTES:

1. FOR ESPLANADE STRUCTURAL PLANS SEE SHEETS 22 THROUGH 37.
2. OUTFALL CONSTRUCTION SHALL BE COORDINATED WITH DEMOLITION/CONSTRUCTION OF ESPLANADE AND SHEET PILE CUT-OFF WALL.
3. FOR WORK RELATED TO THE INSTALLATION OF THE DEP SEWER LINE (EXCAVATION, CONCRETE, JOINTS, REBAR, AND BACKFILL TO EXISTING GRADE) SHOWN ON THIS DRAWING, USE ITEM NO. 50.11CS080040.
4. FOR WORK RELATED TO THE END TREATMENTS OF THE SEWER LINE, COFFERDAMS AND OTHER RELATED WORK TO THE SEWER LINE INSTALLATION PERFORMED AT THE SHEET PILE INTERFACE USE ITEM 51.61F053.
5. FOR WORK RELATED THE REINFORCED CONCRETE PILE BENT USE ITEM 73.21AC FOR CONCRETE AND ITEM 73.51AS FOR REINFORCEMENT.
6. FOR DEP SEWER PILES SHOWN ON THIS DRAWING, USE ITEM 70.11SH.
7. PLACEMENT OF ANY REQUIRED COFFERDAMS SHALL BE LIMITED TO BELOW THE EXISTING SHADE LINE OF THE ESPLANADE.

OWNER(S):

CITY OF NEW YORK PARKS & RECREATION
OLMSTED CENTER
FLUSHING MEADOWS CORONA PARK
FLUSHING, NEW YORK 11368

IN: EAST RIVER AT: MONTGOMERY STREET TO CAPT. PATRICK J. BROWN WALK
TOWN: NEW YORK STATE: NEW YORK
APPLICATION BY: NYC DEPARTMENT OF DESIGN AND CONSTRUCTION

WATERWAY:	DATUM:
EAST RIVER	NORTH AMERICAN VERTICAL DATUM 1988 (NAVD88)

EAST SIDE COASTAL RESILIENCY PROJECT

DATE: 11/15/2019	REV.: 1	SHEET NO 44 OF 66

OUTFALL NCM-028 (REACH E)

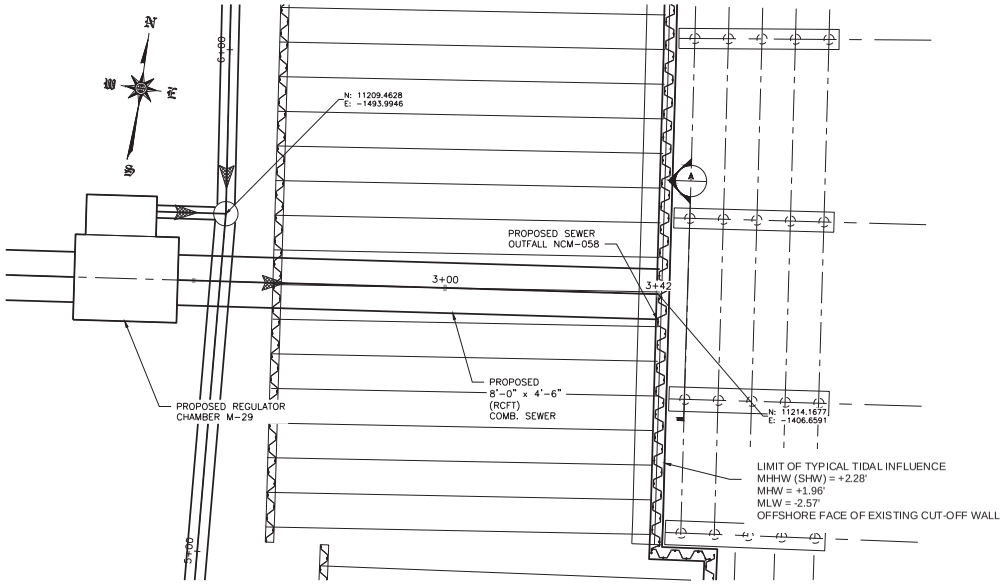

PARTIAL PLAN
SCALE: 1"=10'

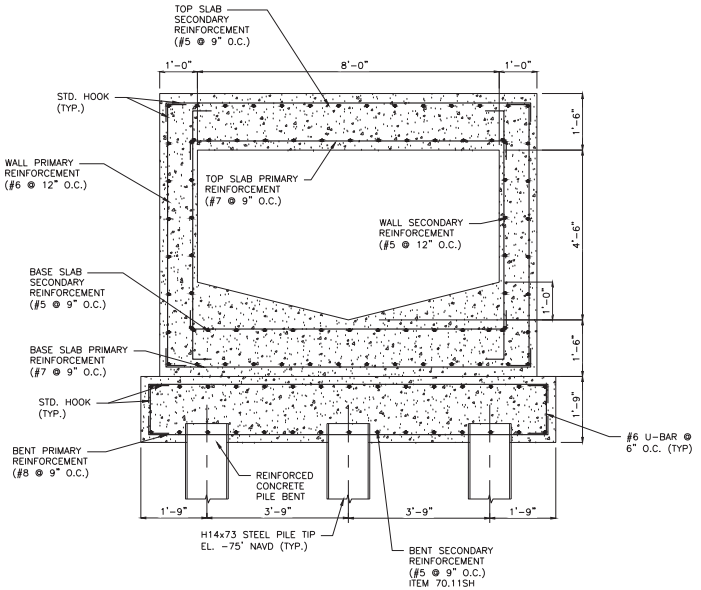

8'-0"W x 4'-6"H COMB. SEWER
CROSS SECTION
SCALE: 3/4" = 1'-0"

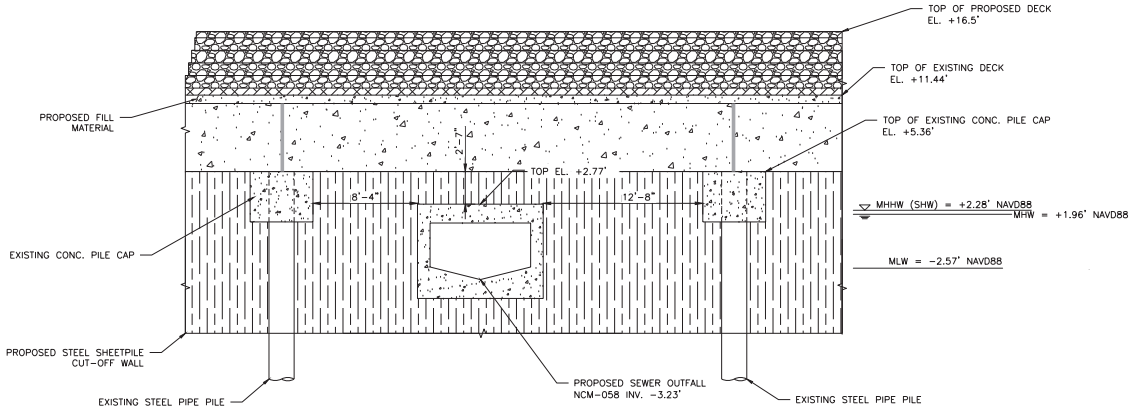

A ELEVATION
SCALE: 3"=1'-0"

NOTES:

1. FOR ESPLANADE STRUCTURAL PLANS SEE SHEETS 22 THROUGH 37.
2. OUTFALL CONSTRUCTION SHALL BE COORDINATED WITH DEMOLITION/CONSTRUCTION OF ESPLANADE AND SHEET PILE CUT-OFF WALL.
3. FOR WORK RELATED TO THE INSTALLATION OF THE DEP SEWER LINE (EXCAVATION, CONCRETE, JOINTS, REBAR, AND BACKFILL TO EXISTING GRADE) SHOWN ON THIS DRAWING, USE ITEM NO. 50.11CS080046.
4. FOR WORK RELATED TO THE END TREATMENTS OF THE SEWER LINE, COFFERDAMS AND OTHER RELATED WORK TO THE SEWER LINE INSTALLATION PERFORMED AT THE SHEET PILE INTERFACE USE ITEM 51.61F053.
5. FOR WORK RELATED THE REINFORCED CONCRETE PILE BENT USE ITEM 73.21AC FOR CONCRETE AND ITEM 73.51AS FOR REINFORCEMENT.
6. FOR DEP SEWER PILES SHOWN ON THIS DRAWING, USE ITEM 70.11SH.
7. PLACEMENT OF ANY REQUIRED COFFERDAMS SHALL BE LIMITED TO BELOW THE EXISTING SHADE LINE OF THE ESPLANADE.

OWNER(S):

CITY OF NEW YORK PARKS & RECREATION
OLMSTED CENTER
FLUSHING MEADOWS CORONA PARK
FLUSHING, NEW YORK 11368

IN: EAST RIVER AT: MONTGOMERY STREET TO CAPT. PATRICK J. BROWN WALK
TOWN: NEW YORK STATE: NEW YORK
APPLICATION BY: NYC DEPARTMENT OF DESIGN AND CONSTRUCTION

WATERWAY:	DATUM:
EAST RIVER	NORTH AMERICAN VERTICAL DATUM 1988 (NAVD88)

EAST SIDE COASTAL RESILIENCY PROJECT

DATE: 11/15/2019	REV.: 1	SHEET NO 45 OF 66

OUTFALL NCM-058 (REACH F)

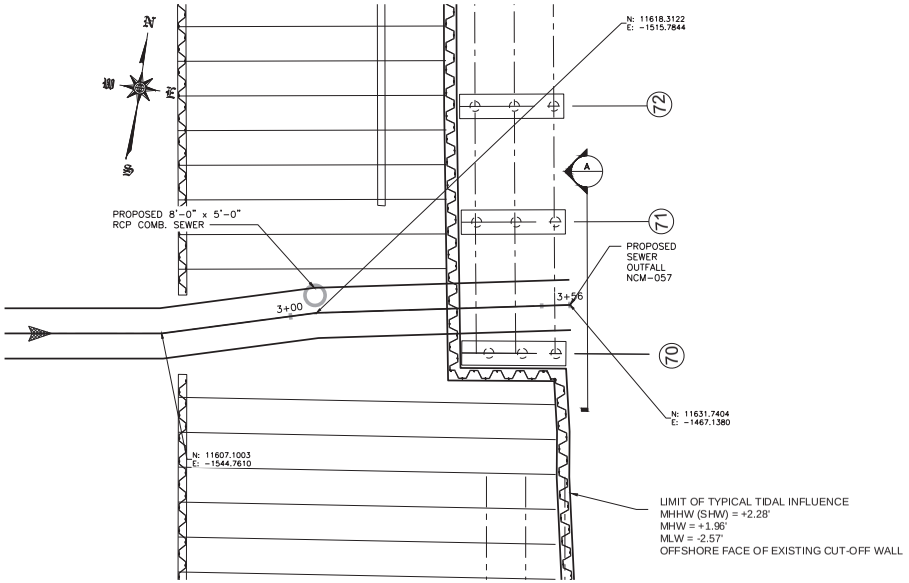

PARTIAL PLAN
SCALE: 1"=10'

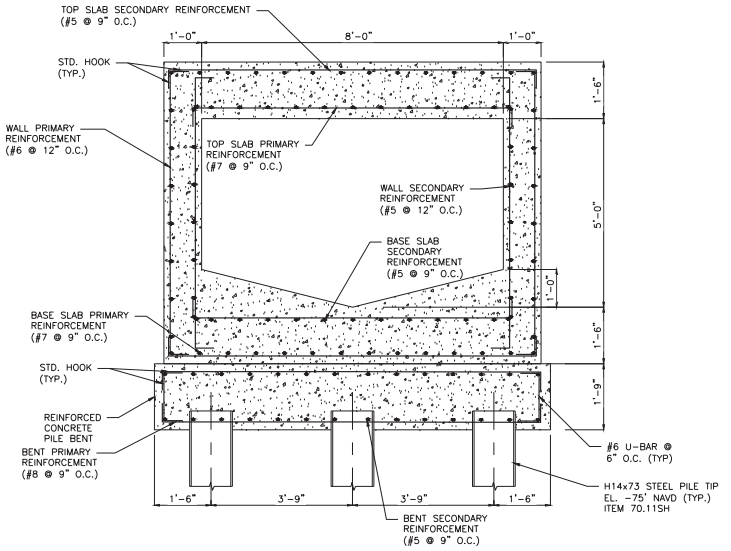

8'-0"W x 5'-0"H COMB. SEWER
CROSS SECTION
SCALE: 3/4" = 1'-0"

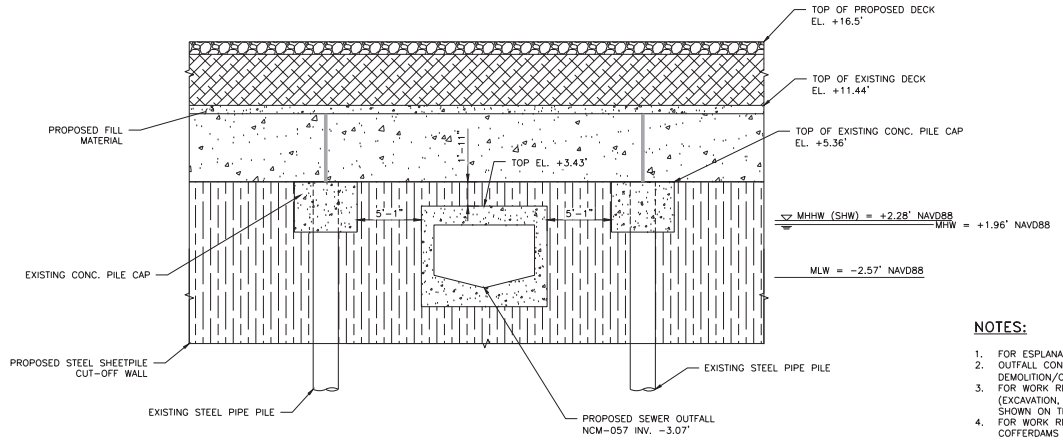

A ELEVATION
SCALE: 3"=1'-0"

NOTES:

1. FOR ESPLANADE STRUCTURAL PLANS SEE SHEETS 22 THROUGH 37.
2. OUTFALL CONSTRUCTION SHALL BE COORDINATED WITH DEMOLITION/CONSTRUCTION OF ESPLANADE AND SHEET PILE CUT-OFF WALL.
3. FOR WORK RELATED TO THE INSTALLATION OF THE DEP SEWER LINE (EXCAVATION, CONCRETE, JOINTS, REBAR, AND BACKFILL TO EXISTING GRADE) SHOWN ON THIS DRAWING, USE ITEM NO. 50.11CS080050.
4. FOR WORK RELATED TO THE END TREATMENTS OF THE SEWER LINE, COFFERDAMS AND OTHER RELATED WORK TO THE SEWER LINE INSTALLATION PERFORMED AT THE SHEET PILE INTERFACE USE ITEM 51.61F053.
5. FOR WORK RELATED THE REINFORCED CONCRETE PILE BENT USE ITEM 73.21AC FOR CONCRETE AND ITEM 73.51AS FOR REINFORCEMENT.
6. FOR DEP SEWER PILES SHOWN ON THIS DRAWING, USE ITEM 70.11SH.
7. PLACEMENT OF ANY REQUIRED COFFERDAMS SHALL BE LIMITED TO BELOW THE EXISTING SHADE LINE OF THE ESPLANADE.

OWNER(S):

CITY OF NEW YORK PARKS & RECREATION
OLMSTED CENTER
FLUSHING MEADOWS CORONA PARK
FLUSHING, NEW YORK 11368

IN: EAST RIVER AT: MONTGOMERY STREET TO CAPT. PATRICK J. BROWN WALK
TOWN: NEW YORK STATE: NEW YORK
APPLICATION BY: NYC DEPARTMENT OF DESIGN AND CONSTRUCTION

WATERWAY:	DATUM:
EAST RIVER	NORTH AMERICAN VERTICAL DATUM 1988 (NAVD88)

EAST SIDE COASTAL RESILIENCY PROJECT

DATE: 11/15/2019	REV.: 1	SHEET NO 46 OF 66

OUTFALL NCM-057 (REACH F)

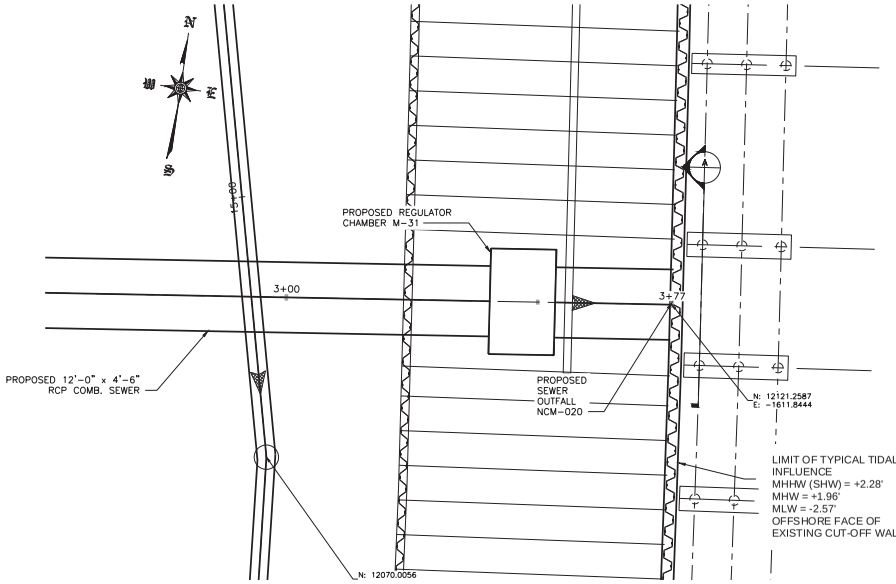

PARTIAL PLAN
SCALE: 1"=10'

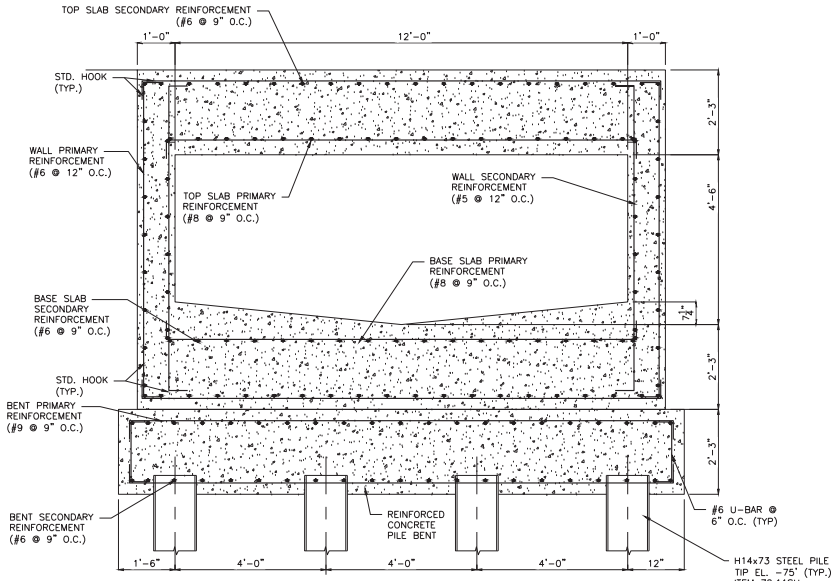

12'-0"W x 4'-6"H COMB. SEWER
CROSS SECTION
SCALE: 3/4" = 1'-0"

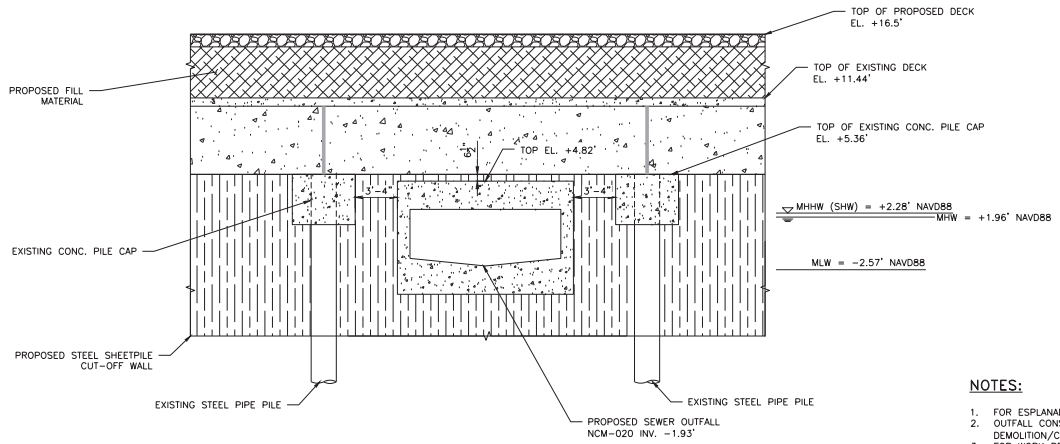

A ELEVATION
SCALE: 3"=1'-0"

NOTES:

1. FOR ESPLANADE STRUCTURAL PLANS SEE SHEETS 22 THROUGH 37.
2. OUTFALL CONSTRUCTION SHALL BE COORDINATED WITH DEMOLITION/CONSTRUCTION OF ESPLANADE AND SHEET PILE CUT-OFF WALL.
3. FOR WORK RELATED TO THE INSTALLATION OF THE DEP SEWER LINE (EXCAVATION, CONCRETE, JOINTS, REBAR, AND BACKFILL TO EXISTING GRADE) SHOWN ON THIS DRAWING, USE ITEM NO. 50.11CS120046.
4. FOR WORK RELATED TO THE END TREATMENTS OF THE SEWER LINE, COFFERDAMS AND OTHER RELATED WORK TO THE SEWER LINE INSTALLATION PERFORMED AT THE SHEET PILE INTERFACE USE ITEM 51.61F053.
5. FOR WORK RELATED THE REINFORCED CONCRETE PILE BENT USE ITEM 73.21AC FOR CONCRETE AND ITEM 73.51AS FOR REINFORCEMENT.
6. FOR DEP SEWER PILES SHOWN ON THIS DRAWING, USE ITEM 70.11SH.
7. PLACEMENT OF ANY REQUIRED COFFERDAMS SHALL BE LIMITED TO BELOW THE EXISTING SHADE LINE OF THE ESPLANADE.

OWNER(S):

CITY OF NEW YORK PARKS & RECREATION
OLMSTED CENTER
FLUSHING MEADOWS CORONA PARK
FLUSHING, NEW YORK 11368

IN: EAST RIVER AT: MONTGOMERY STREET TO CAPT. PATRICK J. BROWN WALK
TOWN: NEW YORK STATE: NEW YORK
APPLICATION BY: NYC DEPARTMENT OF DESIGN AND CONSTRUCTION

WATERWAY:	DATUM:
EAST RIVER	NORTH AMERICAN VERTICAL DATUM 1988 (NAVD88)

EAST SIDE COASTAL RESILIENCY PROJECT

DATE: 11/15/2019	REV.: 1	SHEET NO 47 OF 66

OUTFALL NCM-020 (REACH G)

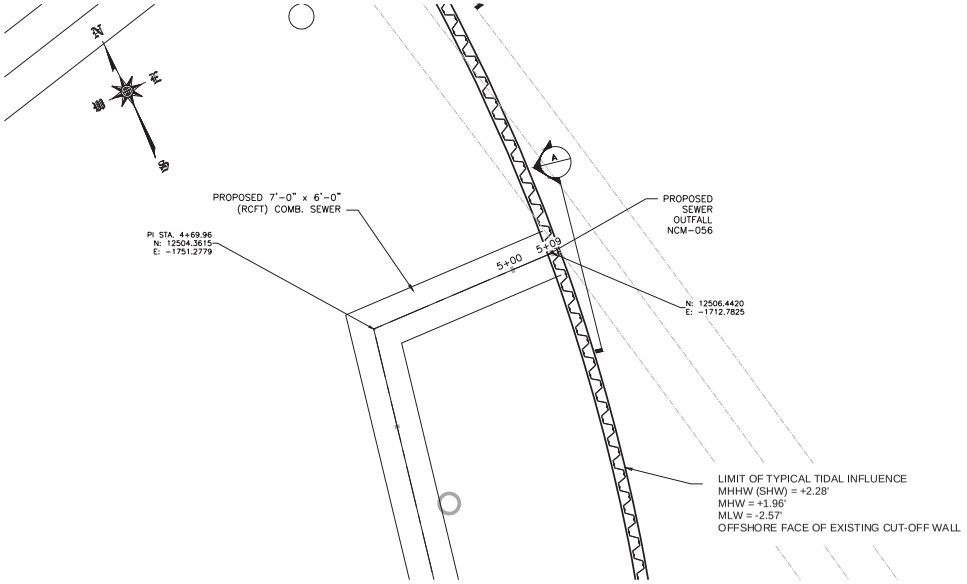

PARTIAL PLAN
SCALE: 1"=10'

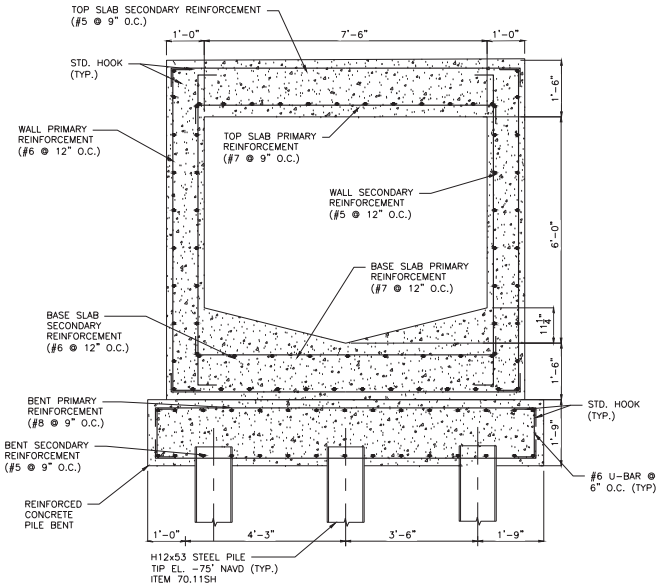

7'-0"W x 6'-0"H COMB. SEWER
CROSS SECTION
SCALE: 3/4" = 1'-0"

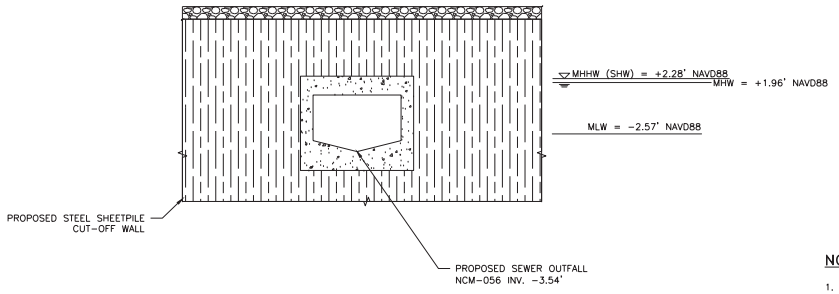

A ELEVATION
SCALE: 3"=1'-0"

NOTES:

1. FOR ESPLANADE STRUCTURAL PLANS SEE SHEETS 22 THROUGH 37.
2. OUTFALL CONSTRUCTION SHALL BE COORDINATED WITH DEMOLITION/CONSTRUCTION OF ESPLANADE AND SHEET PILE CUT-OFF WALL.
3. FOR WORK RELATED TO THE INSTALLATION OF THE DEP SEWER LINE (EXCAVATION, CONCRETE, JOINTS, REBAR, AND BACKFILL TO EXISTING GRADE) SHOWN ON THIS DRAWING, USE ITEM NO. 50.11CS070060.
4. FOR WORK RELATED TO THE END TREATMENTS OF THE SEWER LINE, COFFERDAMS AND OTHER RELATED WORK TO THE SEWER LINE INSTALLATION PERFORMED AT THE SHEET PILE INTERFACE USE ITEM 51.61F053.
5. FOR WORK RELATED THE REINFORCED CONCRETE PILE BENT USE ITEM 73.21AC FOR CONCRETE AND ITEM 73.51AS FOR REINFORCEMENT.
6. FOR DEP SEWER PILES SHOWN ON THIS DRAWING, USE ITEM 70.11SH.
7. PLACEMENT OF ANY REQUIRED COFFERDAMS SHALL BE LIMITED TO BELOW THE EXISTING SHADE LINE OF THE ESPLANADE.

OWNER(S):

CITY OF NEW YORK PARKS & RECREATION
OLMSTED CENTER
FLUSHING MEADOWS CORONA PARK
FLUSHING, NEW YORK 11368

IN: EAST RIVER		AT: MONTGOMERY STREET TO CAPT. PATRICK J. BROWN WALK	
TOWN: NEW YORK		STATE: NEW YORK	
APPLICATION BY: NYC DEPARTMENT OF DESIGN AND CONSTRUCTION			
WATERWAY: EAST RIVER		DATUM: NORTH AMERICAN VERTICAL DATUM 1988 (NAVD88)	
EAST SIDE COASTAL RESILIENCY PROJECT			
DATE: 11/15/2019	REV.: 1	SHEET NO 48 OF 66	

OUTFALL NCM-056 (REACH G)

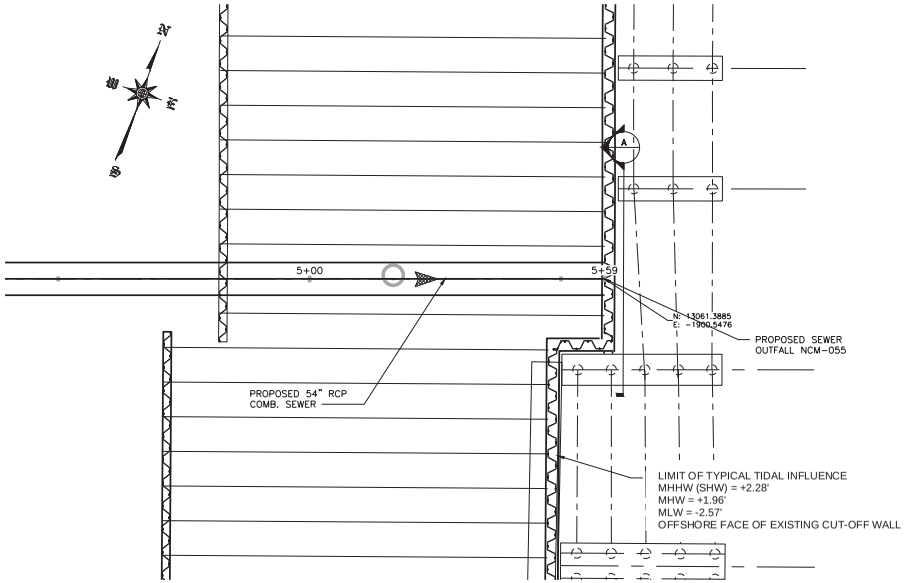

PARTIAL PLAN
SCALE: 1"=10'

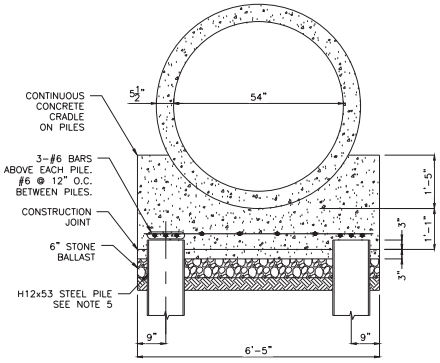

54" COMB. SEWER CROSS SECTION
SCALE: 3/4" = 1'-0"

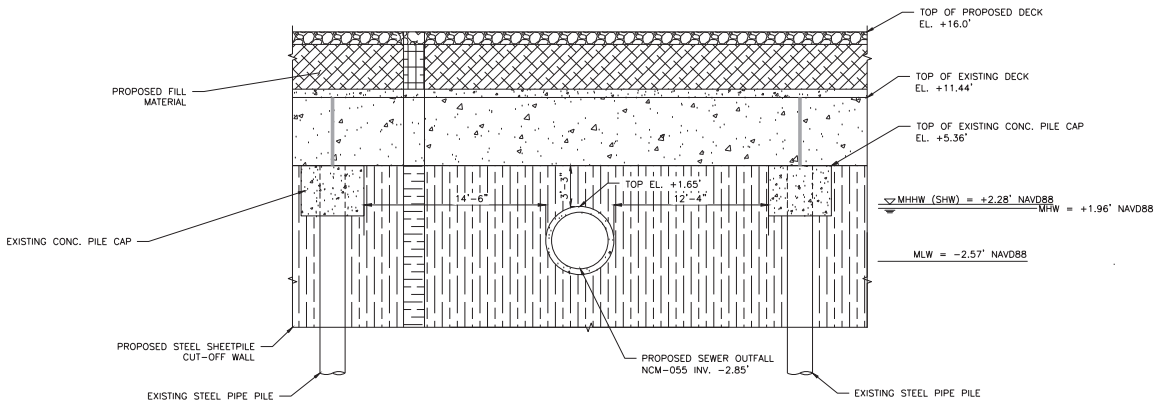

A ELEVATION
SCALE: 3"=1'-0"

NOTES:

1. FOR ESPLANADE STRUCTURAL PLANS SEE SHEETS 22 THROUGH 37.
2. OUTFALL CONSTRUCTION SHALL BE COORDINATED WITH DEMOLITION/CONSTRUCTION OF ESPLANADE AND SHEET PILE CUT-OFF WALL.
3. FOR WORK RELATED TO THE INSTALLATION OF THE DEP SEWER LINE (EXCAVATION, CONCRETE, JOINTS, REBAR, AND BACKFILL TO EXISTING GRADE) SHOWN ON THIS DRAWING, USE ITEM NO. 50.21C4C054D.
4. FOR WORK RELATED TO THE END TREATMENTS OF THE SEWER LINE, COFFERDAMS AND OTHER RELATED WORK TO THE SEWER LINE INSTALLATION PERFORMED AT THE SHEET PILE INTERFACE USE ITEM 51.61F053.
5. FOR WORK RELATED THE REINFORCED CONCRETE PILE BENT USE ITEM 73.21AC FOR CONCRETE AND ITEM 73.51AS FOR REINFORCEMENT.
6. FOR DEP SEWER PILES SHOWN ON THIS DRAWING, USE ITEM 70.11SH.
7. PLACEMENT OF ANY REQUIRED COFFERDAMS SHALL BE LIMITED TO BELOW THE EXISTING SHADE LINE OF THE ESPLANADE.

OWNER(S):

CITY OF NEW YORK PARKS & RECREATION
OLMSTED CENTER
FLUSHING MEADOWS CORONA PARK
FLUSHING, NEW YORK 11368

IN: EAST RIVER AT: MONTGOMERY STREET TO CAPT. PATRICK J. BROWN WALK
TOWN: NEW YORK STATE: NEW YORK
APPLICATION BY: NYC DEPARTMENT OF DESIGN AND CONSTRUCTION

WATERWAY:	DATUM:
EAST RIVER	NORTH AMERICAN VERTICAL DATUM 1988 (NAVD88)

EAST SIDE COASTAL RESILIENCY PROJECT

DATE: 11/15/2019	REV.: 1	SHEET NO 49 OF 66

OUTFALL NCM-055 (REACH H)

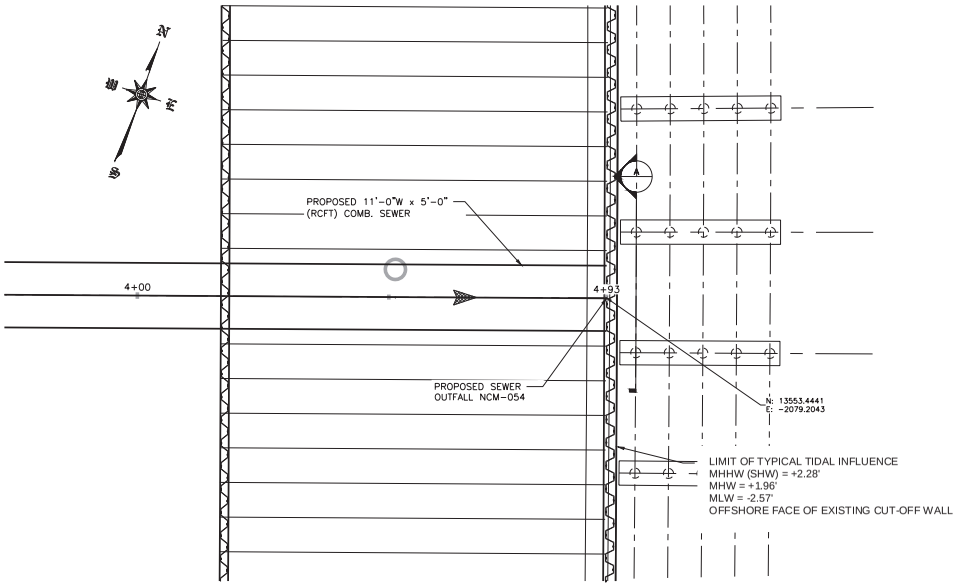

PARTIAL PLAN
SCALE: 1"=10'

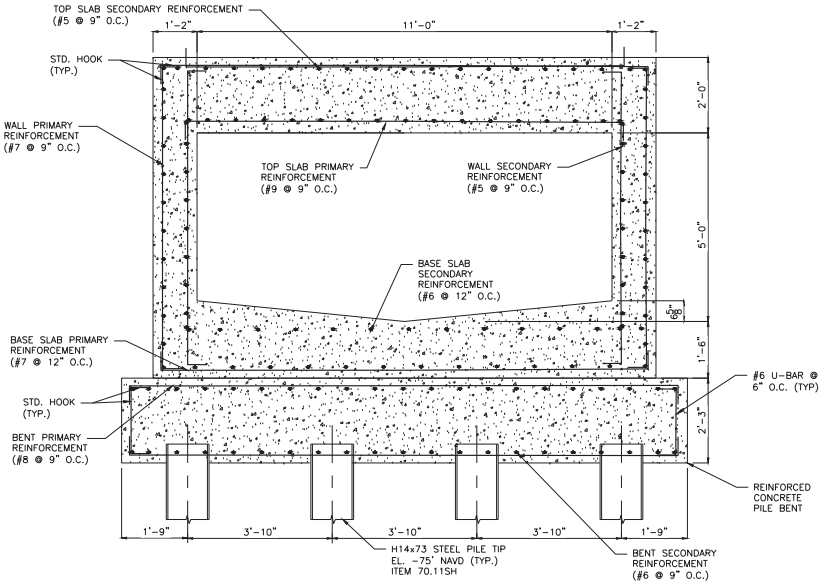

11'-0"W x 5'-0"H COMB. SEWER
CROSS SECTION

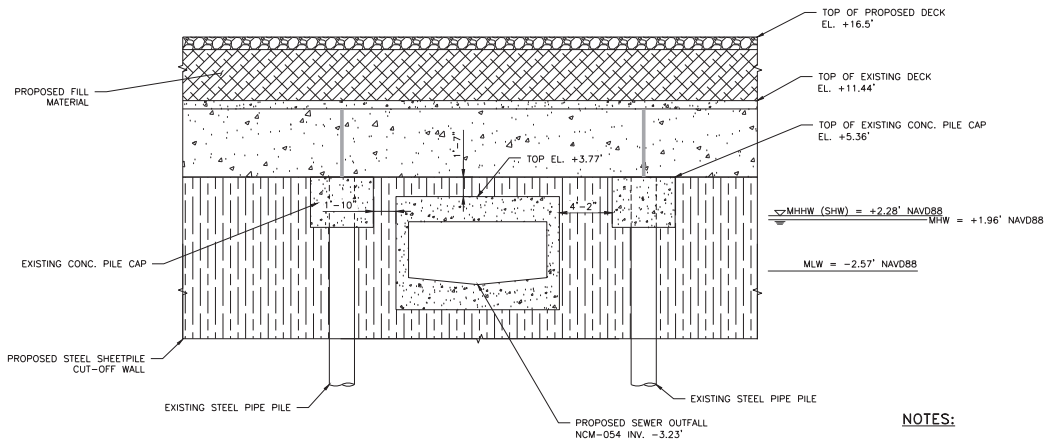

A ELEVATION
SCALE: 3"=1'-0"

NOTES:

1. FOR ESPLANADE STRUCTURAL PLANS SEE SHEETS 22 THROUGH 37.
2. OUTFALL CONSTRUCTION SHALL BE COORDINATED WITH DEMOLITION/CONSTRUCTION OF ESPLANADE AND SHEET PILE CUT-OFF WALL.
3. FOR WORK RELATED TO THE INSTALLATION OF THE DEP SEWER LINE (EXCAVATION, CONCRETE, JOINTS, REBAR, AND BACKFILL TO EXISTING GRADE) SHOWN ON THIS DRAWING, USE ITEM NO. 50.11CS110050.
4. FOR WORK RELATED TO THE END TREATMENTS OF THE SEWER LINE, COFFERDAMS AND OTHER RELATED WORK TO THE SEWER LINE INSTALLATION PERFORMED AT THE SHEET PILE INTERFACE USE ITEM 51.61F053.
5. FOR WORK RELATED THE REINFORCED CONCRETE PILE BENT USE ITEM 73.21AC FOR CONCRETE AND ITEM 73.51AS FOR REINFORCEMENT.
6. FOR DEP SEWER PILES SHOWN ON THIS DRAWING, USE ITEM 70.11SH.
7. PLACEMENT OF ANY REQUIRED COFFERDAMS SHALL BE LIMITED TO BELOW THE EXISTING SHADE LINE OF THE ESPLANADE.

OWNER(S):

CITY OF NEW YORK PARKS & RECREATION
OLMSTED CENTER
FLUSHING MEADOWS CORONA PARK
FLUSHING, NEW YORK 11368

IN: EAST RIVER AT: MONTGOMERY STREET TO CAPT. PATRICK J. BROWN WALK
TOWN: NEW YORK STATE: NEW YORK
APPLICATION BY: NYC DEPARTMENT OF DESIGN AND CONSTRUCTION

WATERWAY:	DATUM:
EAST RIVER	NORTH AMERICAN VERTICAL DATUM 1988 (NAVD88)

EAST SIDE COASTAL RESILIENCY PROJECT

DATE: 11/15/2019	REV.: 1	SHEET NO 50 OF 66

OUTFALL NCM-054 (REACH H)

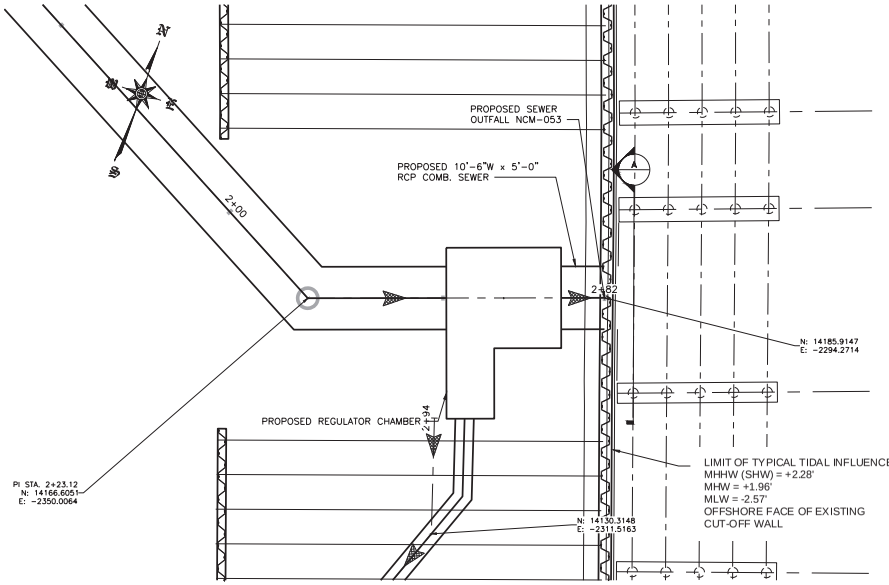

PARTIAL PLAN
SCALE: 1"=10'

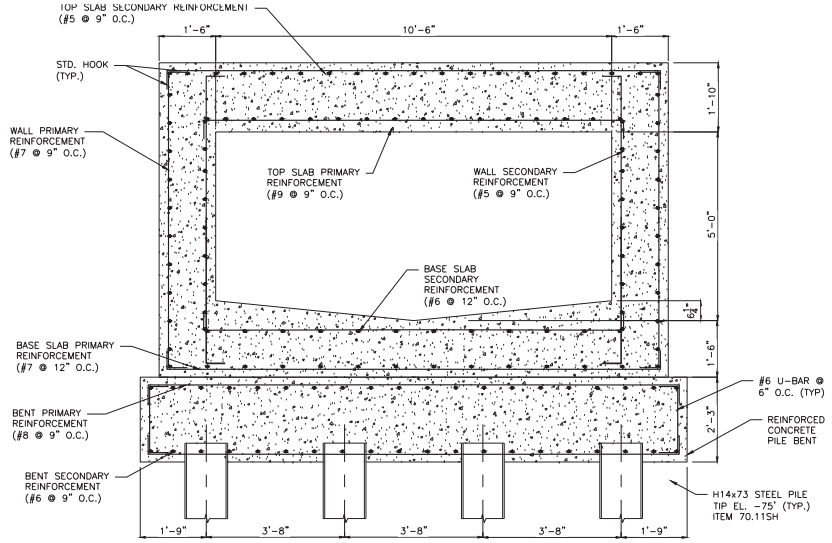

10'-6"W x 5'-0"H COMB. SEWER CROSS SECTION
SCALE: 3/4"=1'

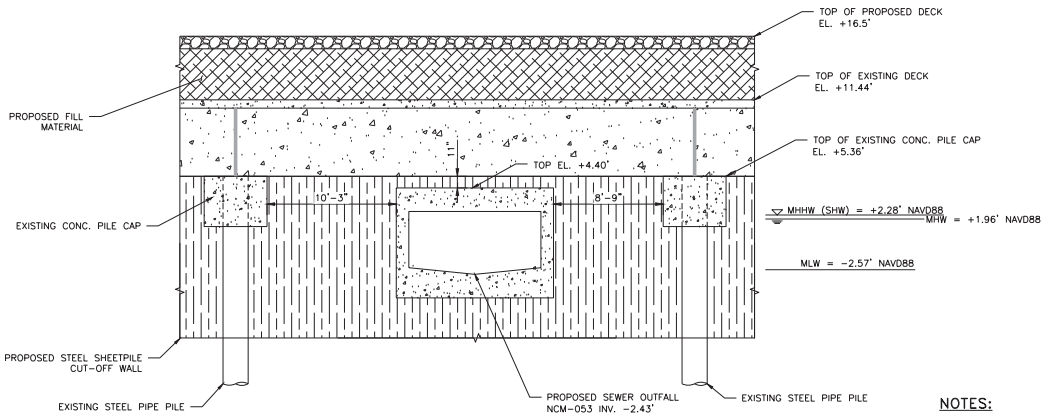

A ELEVATION
SCALE: 3"=1'-0"

NOTES:

1. FOR ESPLANADE STRUCTURAL PLANS SEE SHEETS 22 THROUGH 37.
2. OUTFALL CONSTRUCTION SHALL BE COORDINATED WITH DEMOLITION/CONSTRUCTION OF ESPLANADE AND SHEET PILE CUT-OFF WALL.
3. FOR WORK RELATED TO THE INSTALLATION OF THE DEP SEWER LINE (EXCAVATION, CONCRETE, JOINTS, REBAR, AND BACKFILL TO EXISTING GRADE) SHOWN ON THIS DRAWING, USE ITEM NO. 50.11CS106050.
4. FOR WORK RELATED TO THE END TREATMENTS OF THE SEWER LINE, COFFERDAMS AND OTHER RELATED WORK TO THE SEWER LINE INSTALLATION PERFORMED AT THE SHEET PILE INTERFACE USE ITEM 51.61F053.
5. FOR WORK RELATED THE REINFORCED CONCRETE PILE BENT USE ITEM 73.21AC FOR CONCRETE AND ITEM 73.51AS FOR REINFORCEMENT.
6. FOR DEP SEWER PILES SHOWN ON THIS DRAWING, USE ITEM 70.11SH.
7. PLACEMENT OF ANY REQUIRED COFFERDAMS SHALL BE LIMITED TO BELOW THE EXISTING SHADE LINE OF THE ESPLANADE.

OWNER(S):

CITY OF NEW YORK PARKS & RECREATION
OLMSTED CENTER
FLUSHING MEADOWS CORONA PARK
FLUSHING, NEW YORK 11368

IN: EAST RIVER AT: MONTGOMERY STREET TO CAPT. PATRICK J. BROWN WALK
TOWN: NEW YORK STATE: NEW YORK
APPLICATION BY: NYC DEPARTMENT OF DESIGN AND CONSTRUCTION

WATERWAY:	DATUM:
EAST RIVER	NORTH AMERICAN VERTICAL DATUM 1988 (NAVD88)

EAST SIDE COASTAL RESILIENCY PROJECT

DATE: 11/15/2019	REV.: 1	SHEET NO 51 OF 66

OUTFALL NCM-053 (REACH I)

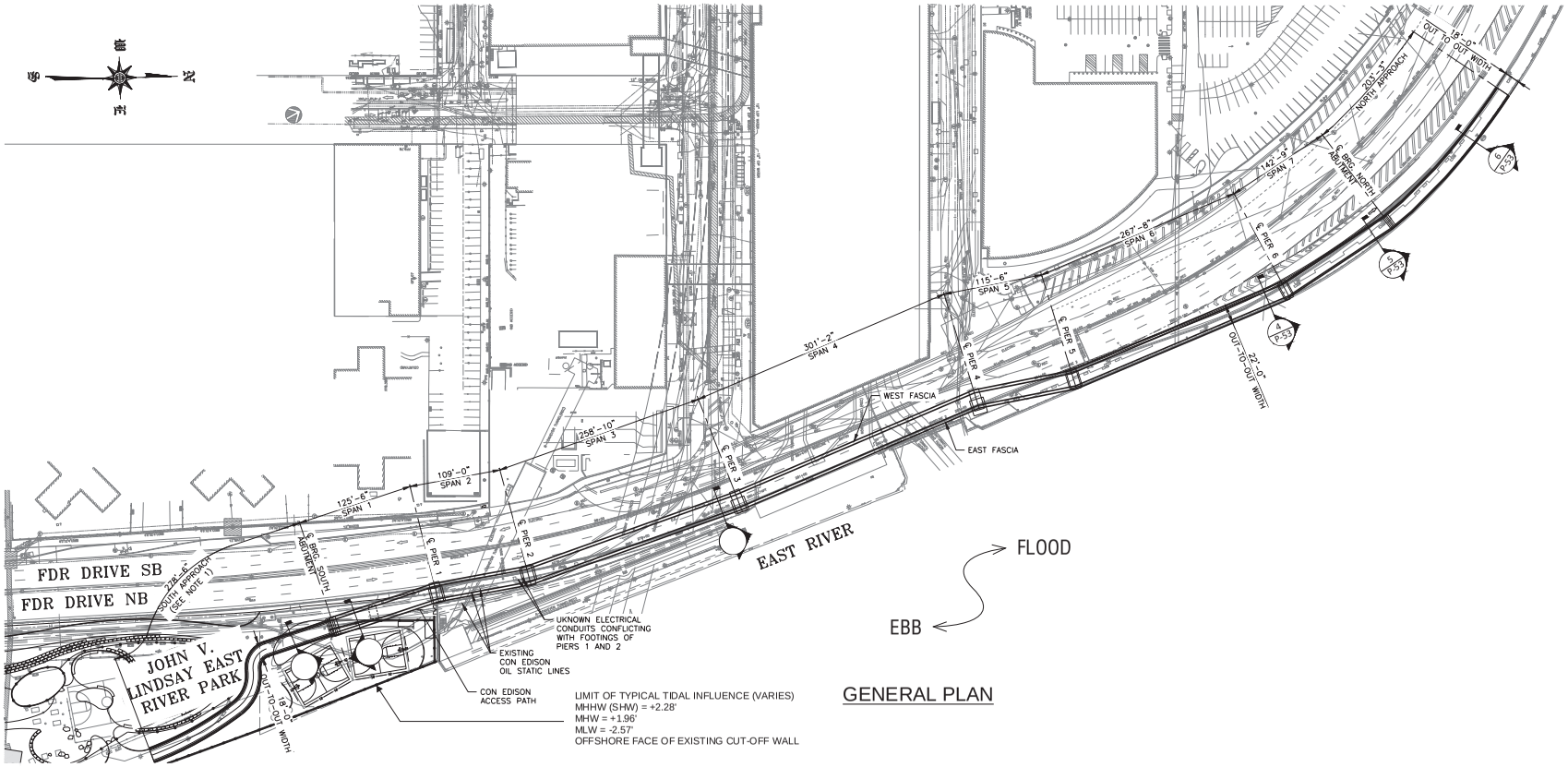

GENERAL PLAN

GENERAL ELEVATION

NOTES:

1. FINAL ALIGNMENT IS UNDER DEVELOPMENT.
2. SOUTH ABUTMENT AND PIERS 1, 2, 3 AND 4 ARE ANTICIPATED TO BE LOCATED UPLAND OF TYPICAL LIMIT OF TIDAL INFLUENCE. PIERS 5, 6 AND NORTH ABUTMENT ARE ANTICIPATED TO BE LOCATED IN WATER.

CONCEPT DESIGN

0 100 200 400 FT

OWNER(S):
CITY OF NEW YORK PARKS & RECREATION
OLMSTED CENTER
FLUSHING MEADOWS CORONA PARK
FLUSHING, NEW YORK 11368

IN: EAST RIVER AT: MONTGOMERY STREET TO CAPT. PATRICK J. BROWN WALK

TOWN: NEW YORK STATE: NEW YORK

APPLICATION BY: NYC DEPARTMENT OF DESIGN AND CONSTRUCTION

WATERWAY: EAST RIVER

DATUM: NORTH AMERICAN VERTICAL DATUM 1988 (NAVD88)

EAST SIDE COASTAL RESILIENCY PROJECT

DATE: 11/15/2019 REV.: 1 SHEET NO 52 OF 66

FLYOVER BRIDGE PLAN

NOTES:
1. FINAL ALIGNMENT IS UNDER DEVELOPMENT.
2. PIER 4 IS ANTICIPATED TO BE LOCATED UPLAND OF TYPICAL LIMIT OF TIDAL INFLUENCE. PIERS 5, 6 AND NORTH ABUTMENT ARE ANTICIPATED TO BE LOCATED IN WATER.
3. LIMIT OF TIDAL INFLUENCE IS TENTATIVE AND WILL BE FINALIZED AT A LATER DATE PENDING ADDITIONAL GEOTECHNICAL INFORMATION.

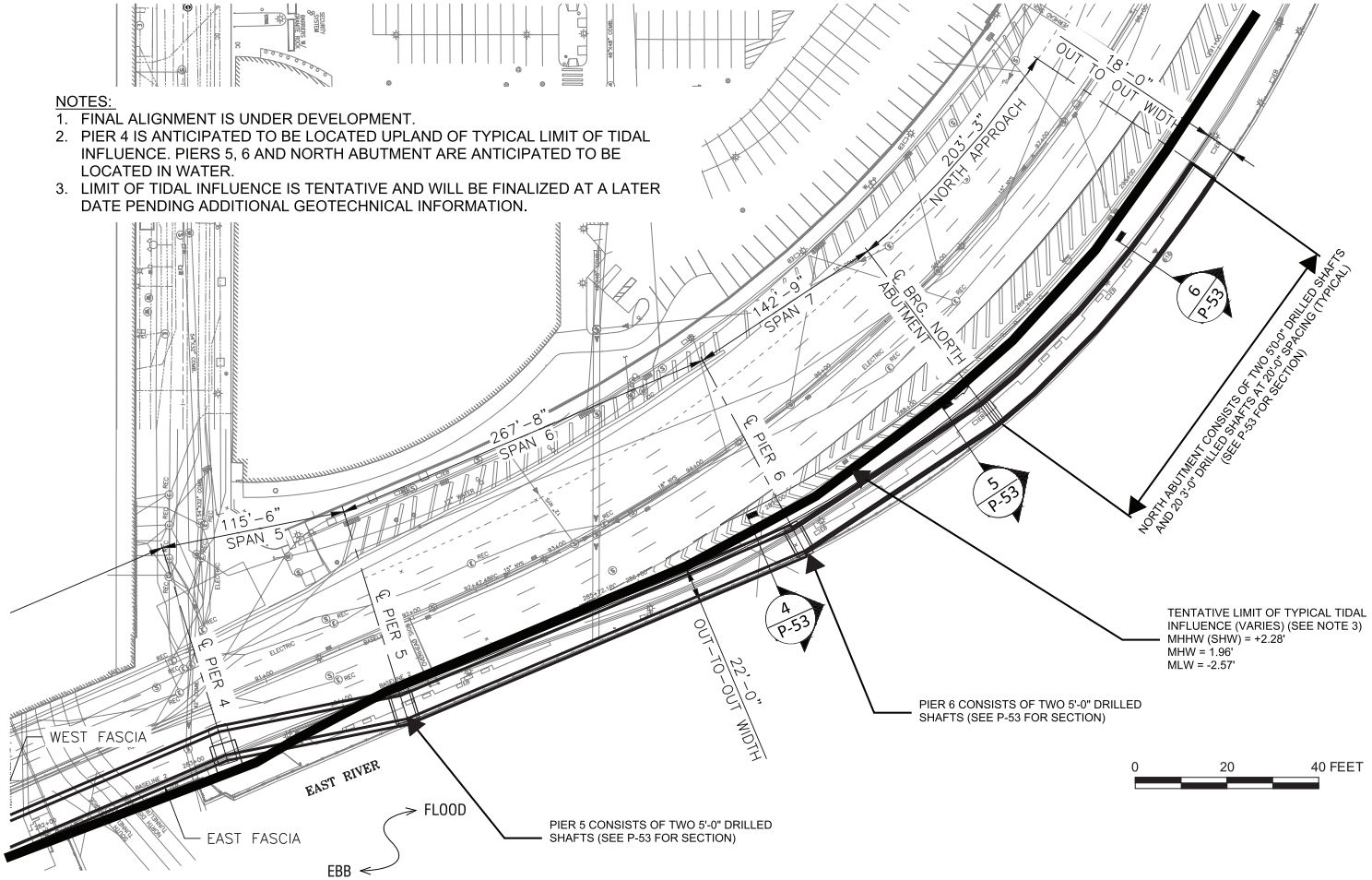

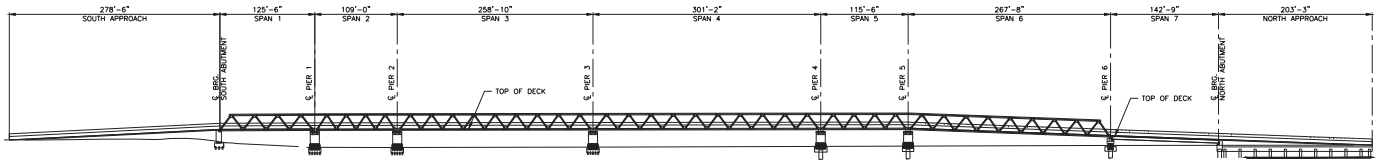

GENERAL ELEVATION

0 100 200 FEET

OWNER(S):
CITY OF NEW YORK PARKS & RECREATION
OLMSTED CENTER
FLUSHING MEADOWS CORONA PARK
FLUSHING, NEW YORK 11368

IN: EAST RIVER AT: MONTGOMERY STREET TO CAPT. PATRICK J. BROWN WALK
TOWN: NEW YORK STATE: NEW YORK
APPLICATION BY: NYC DEPARTMENT OF DESIGN AND CONSTRUCTION

WATERWAY: EAST RIVER
DATUM: NORTH AMERICAN VERTICAL DATUM 1988 (NAVD88)

EAST SIDE COASTAL RESILIENCY PROJECT

DATE: 11/26/2019 REV.: SHEET NO 52A OF 66

FLYOVER BRIDGE PLAN - DETAIL

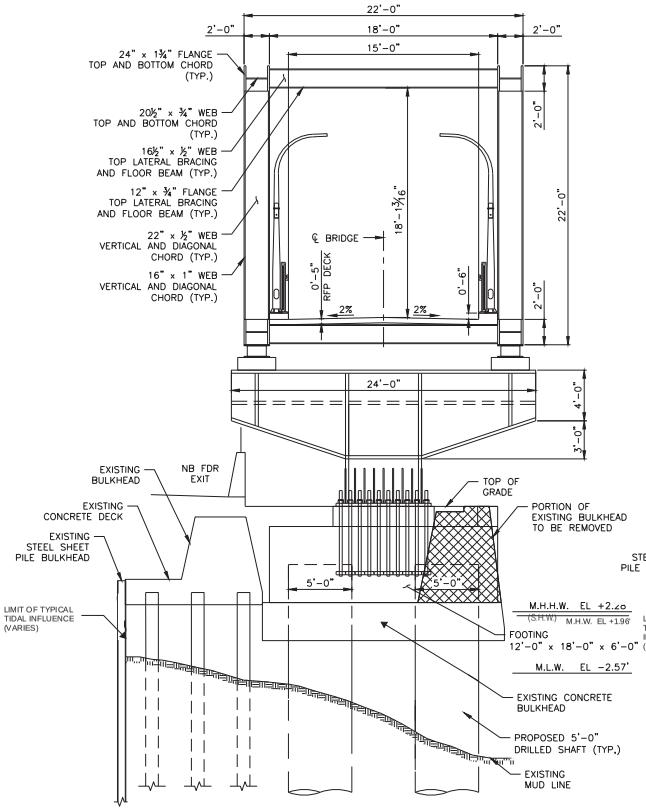

4 P-52 CROSS SECTION

(PIER 6 SHOWN, PIER 5 SIMILAR)

0 8 16 FT

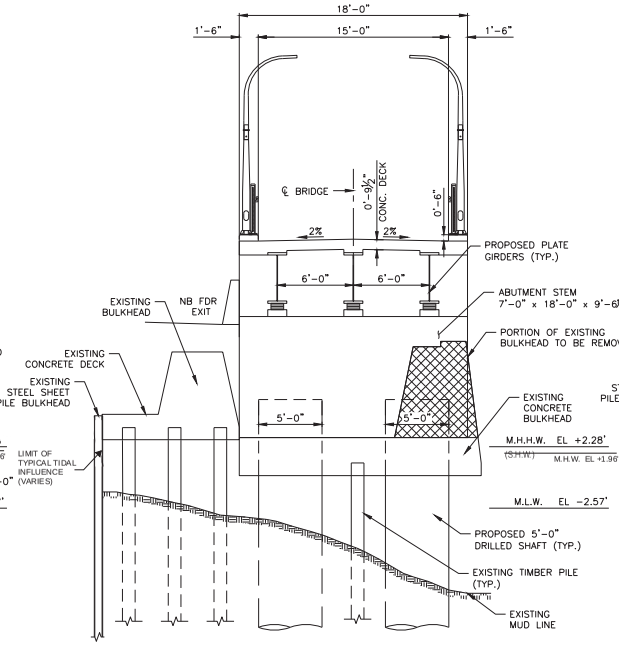

5 P-52 CROSS SECTION

0 8 16 FT

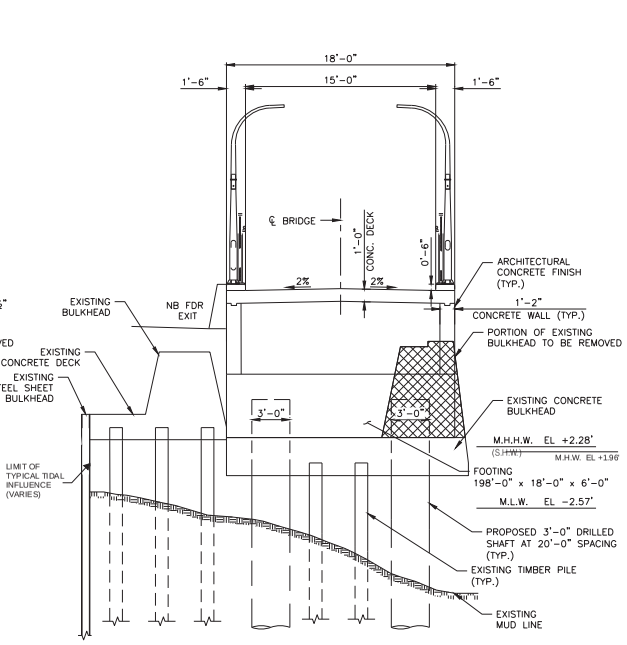

6 P-52 CROSS SECTION

0 8 16 FT

NOTE: FINAL ALIGNMENT OF PIERS 5 AND 6 SHALL BE REVISED SUCH THAT FLYOVER BRIDGE DECKING DOES NOT EXTEND SEAWARD OF THE EXISTING BULKHEAD. NO ADDITIONAL SHADING OF THE EAST RIVER WOULD RESULT FROM THE FLYOVER BRIDGE.

CONCEPT DESIGN

OWNER(S):
CITY OF NEW YORK PARKS & RECREATION
OLMSTED CENTER
FLUSHING MEADOWS CORONA PARK
FLUSHING, NEW YORK 11368

IN: EAST RIVER AT: MONTGOMERY STREET TO CAPT. PATRICK J. BROWN WALK
TOWN: NEW YORK STATE: NEW YORK
APPLICATION BY: NYC DEPARTMENT OF DESIGN AND CONSTRUCTION

WATERWAY: EAST RIVER
DATUM: NORTH AMERICAN VERTICAL DATUM 1988 (NAVD88)

EAST SIDE COASTAL RESILIENCY PROJECT

DATE: 11/15/2019 REV.: 1 SHEET NO 53 OF 66

FLYOVER BRIDGE SECTIONS

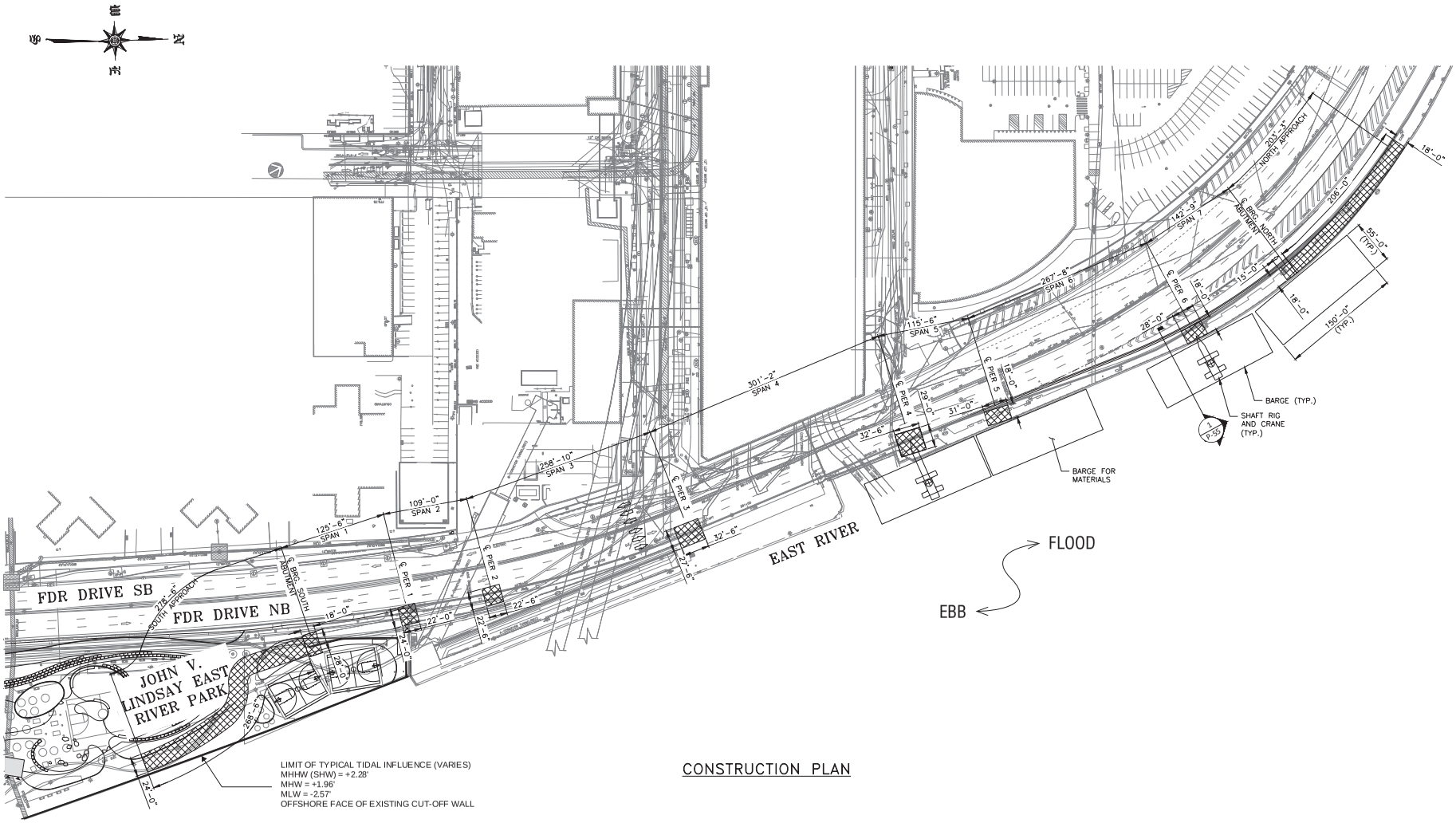

CONSTRUCTION PLAN

LEGEND:
EXCAVATION LIMITS

NOTES:
1. FINAL ALIGNMENT IS UNDER DEVELOPMENT.
2. SOUTH ABUTMENT AND PIERS 1, 2, 3 AND 4 ARE ANTICIPATED TO BE LOCATED UPLAND OF TYPICAL LIMIT OF TIDAL INFLUENCE. PIERS 5, 6 AND NORTH ABUTMENT ARE ANTICIPATED TO BE LOCATED IN WATER.

CONCEPT DESIGN

0 150 300 900 FT

OWNER(S):
CITY OF NEW YORK PARKS & RECREATION
OLMSTED CENTER
FLUSHING MEADOWS CORONA PARK
FLUSHING, NEW YORK 11368

IN: EAST RIVER AT: MONTGOMERY STREET TO CAPT. PATRICK J. BROWN WALK
TOWN: NEW YORK STATE: NEW YORK
APPLICATION BY: NYC DEPARTMENT OF DESIGN AND CONSTRUCTION

WATERWAY: EAST RIVER
DATUM: NORTH AMERICAN VERTICAL DATUM 1988 (NAVD88)

EAST SIDE COASTAL RESILIENCY PROJECT

DATE: 11/15/2019 REV.: 1 SHEET NO 54 OF 66

FLYOVER BRIDGE CONSTRUCTION DETAILS - PLAN

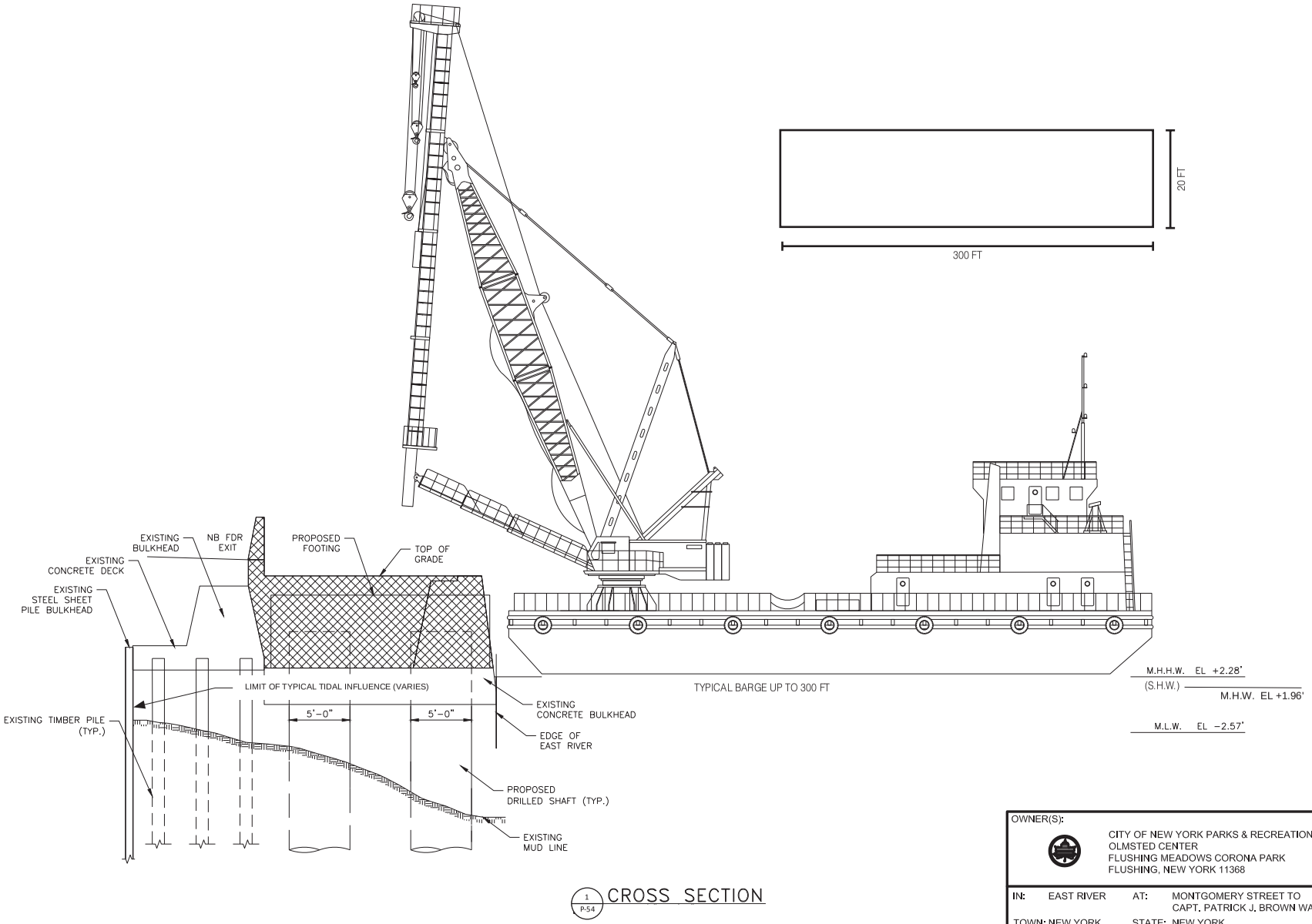

1 P-54 CROSS SECTION

CONCEPT DESIGN

0 8 16 32 FT

OWNER(S):
CITY OF NEW YORK PARKS & RECREATION
OLMSTED CENTER
FLUSHING MEADOWS CORONA PARK
FLUSHING, NEW YORK 11368

IN: EAST RIVER AT: MONTGOMERY STREET TO CAPT. PATRICK J. BROWN WALK
TOWN: NEW YORK STATE: NEW YORK
APPLICATION BY: NYC DEPARTMENT OF DESIGN AND CONSTRUCTION

WATERWAY: EAST RIVER
DATUM: NORTH AMERICAN VERTICAL DATUM 1988 (NAVD88)

EAST SIDE COASTAL RESILIENCY PROJECT

DATE: 11/15/2019 REV.: 1 SHEET NO 55 OF 66

FLYOVER BRIDGE CONSTRUCTION DETAILS - SECTION

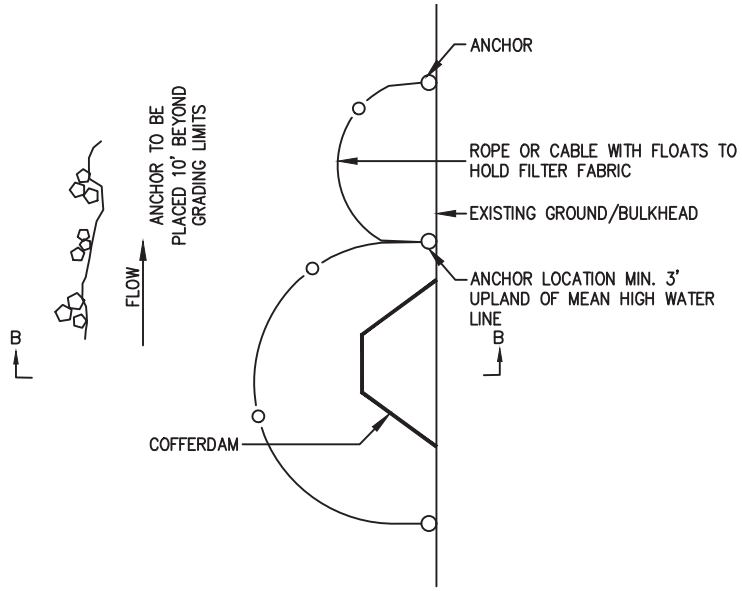

PLAN VIEW
NOT TO SCALE

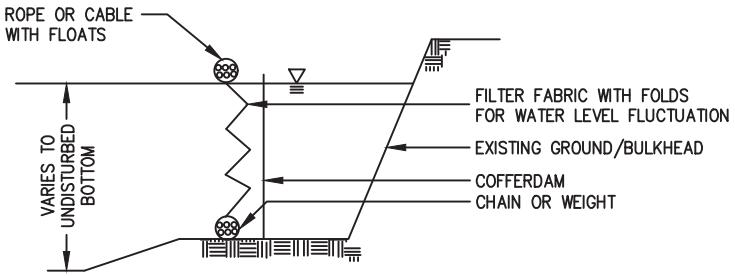

SECTION B–B
NOT TO SCALE

NOTES:

TURBIDITY CURTAIN

1. APPLICATION: TURBIDITY CURTAINS ARE NOT ALLOWED TO BE INSTALLED ACROSS FLOWING WATER COURSES.

2. DESIGN CRITERIA: THE TURBIDITY CURTAIN SHALL BE FIRMLY ANCHORED IN PLACE. THE HEIGHT OF THE CURTAIN SHALL BE 20 PERCENT GREATER THAN THE DEPTH OF THE WATER TO ALLOW FOR WATER LEVEL FLUCTUATIONS. IF WATER DEPTHS AT THE DESIGN ALIGNMENT ARE MINIMAL, THE TOE CAN BE ANCHORED IN PLACE BY STAKING.

3. CONSTRUCTION SPECIFICATIONS: THE AREA OF PROPOSED INSTALLATION OF THE CURTAIN SHALL BE INSPECTED FOR OBSTACLES AND IMPEDIMENTS THAT COULD DAMAGE THE CURTAIN OR IMPAIR ITS EFFECTIVENESS TO RETAIN SEDIMENT. ALL MATERIALS SHALL BE REMOVED SO THEY CANNOT ENTER THE WATERBODY.

4. MAINTENANCE: THE TURBIDITY CURTAIN SHALL BE INSPECTED DAILY. ANY DAMAGED SECTIONS SHALL BE REPAIRED OR REPLACED IMMEDIATELY. IT IS NOT NORMALLY NECESSARY TO REMOVE SEDIMENT DEPOSITED BEHIND THE CURTAIN; HOWEVER, WHEN DETERMINED BY THE ENGINEER TO BE NECESSARY, REMOVAL SHALL BE DONE BY HAND PRIOR TO REMOVAL OF THE BARRIER. ALL REMOVED SILT SHALL BE STABILIZED IN UPLAND AREAS AWAY FROM THE WATERBODY. THE BARRIER SHALL BE REMOVED SLOWLY AND BY CAREFULLY PULLING IT TOWARD THE CONSTRUCTION SITE TO MINIMIZE THE RELEASE OF ATTACHED SEDIMENT.

COFFERDAM

1. DESIGN CRITERIA: NO CONSTRUCTION ACTIVITY SHALL COMMENCE IN THE AREA OF THE COFFERDAM UNTIL IT IS COMPLETED AND STABILIZED. COFFERDAM STRUCTURES SHALL BE SIZED AND INSTALLED IN ACCORDANCE WITH THE MANUFACTURERS RECOMMENDATIONS. TOP OF COFFERDAM SHOULD BE CONSTRUCTED TO ALIGN WITH TOP OF EXISTING PILE CAP.

2. MAINTENANCE AND INSPECTION: ALL COFFERDAMS WILL BE INSPECTED DAILY TO ASSURE PROPER PERFORMANCE AND STABILITY. ANY UNDERMINED OR SETTLED AREAS SHALL BE RESTORED IMMEDIATELY. ANY HOLES, LEAKS, OR TORN AREAS IN THE GEO–MEMBRANES OR FABRIC SHALL BE REPAIRED IMMEDIATELY. ANY SHIFTING, MOVEMENT, OR SETTLING OF THE COFFER DAM SHALL BE ADDRESSED IMMEDIATELY. INSPECT THE INTERIOR DEWATERING SYSTEM AND ENSURE THAT THE SYSTEM IS DISCHARGING CLEAN WATER, OR IS BEING PUMPED TO APPROPRIATE SEDIMENT CONTROL FACILITY PRIOR TO RETURNING TO THE WATER RESOURCE. REPAIR OR REPLACE ANY LOSS OF ROCK RIPRAP OR FILL THAT MAY OCCUR AND ASSURE THE TOP OF THE COFFER DAM IS LEVEL WITHOUT ANY LOW SPOTS DUE TO SETTLING.

3. UPON COMPLETION OF THE CONSTRUCTION WORK, REMOVE ALL EXCESS MATERIAL, ACCUMULATED SEDIMENT AND DEBRIS FROM THE WORK AREA, AND REMOVE THE COFFERDAM IN ACCORDANCE WITH THE SITE STABILIZATION PLAN.

OWNER(S):	CITY OF NEW YORK PARKS & RECREATION OLMSTED CENTER FLUSHING MEADOWS CORONA PARK FLUSHING, NEW YORK 11368
IN: EAST RIVER	AT: MONTGOMERY STREET TO CAPT. PATRICK J. BROWN WALK
TOWN: NEW YORK	STATE: NEW YORK
APPLICATION BY:	NYC DEPARTMENT OF DESIGN AND CONSTRUCTION
WATERWAY: EAST RIVER	DATUM: NORTH AMERICAN VERTICAL DATUM 1988 (NAVD88)
EAST SIDE COASTAL RESILIENCY PROJECT	
DATE: 11/15/2019	REV.: 1 / SHEET NO 56 OF 66
COFFERDAM AND TURBIDITY CURTAIN - TYPICAL DETAILS	

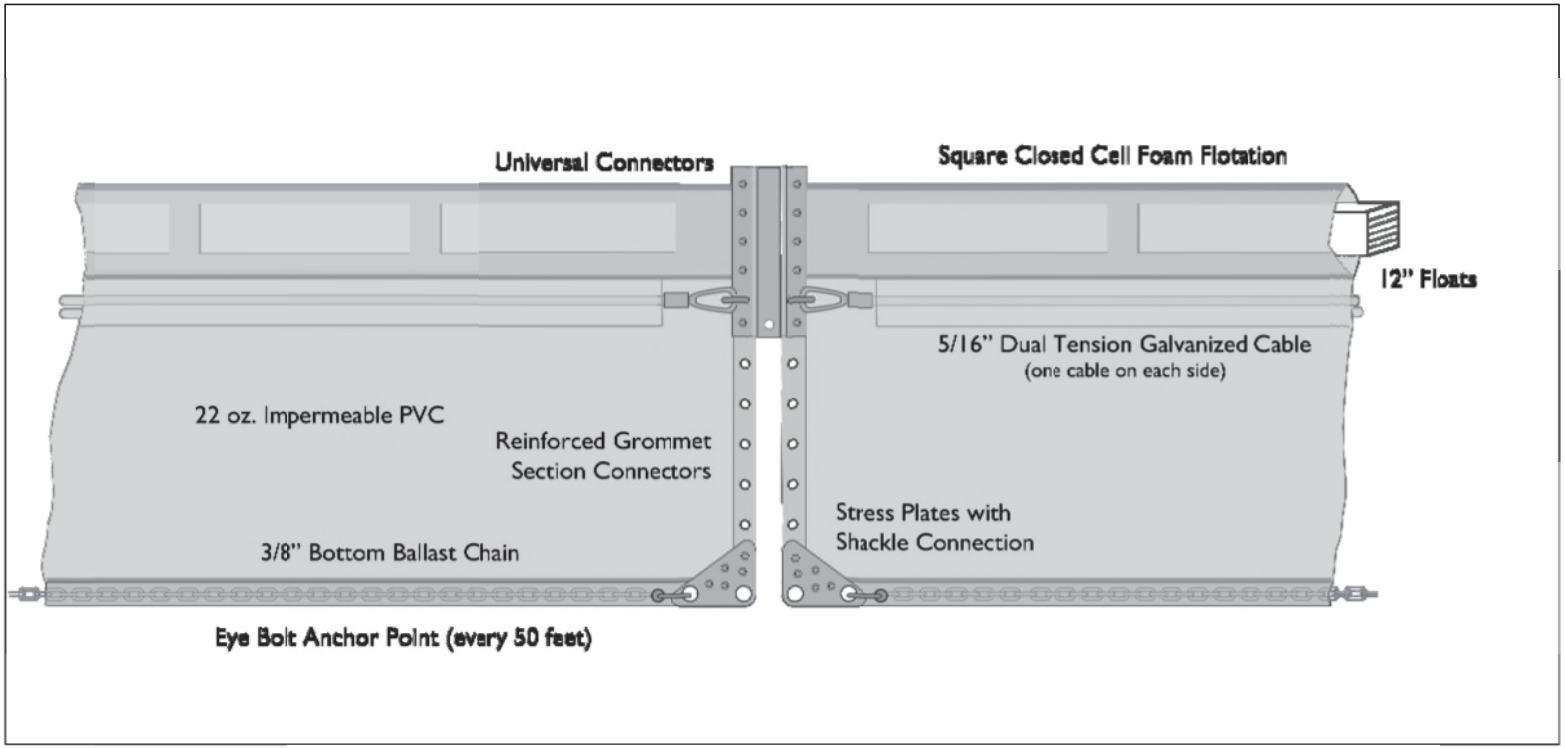

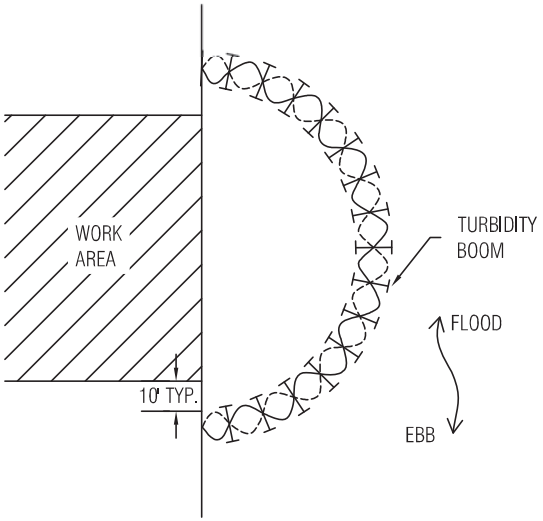

TYPICAL TURBIDITY BOOM LAYOUT

OWNER(S):

CITY OF NEW YORK PARKS & RECREATION
OLMSTED CENTER
FLUSHING MEADOWS CORONA PARK
FLUSHING, NEW YORK 11368

IN: EAST RIVER AT: MONTGOMERY STREET TO CAPT. PATRICK J. BROWN WALK
TOWN: NEW YORK STATE: NEW YORK
APPLICATION BY: NYC DEPARTMENT OF DESIGN AND CONSTRUCTION

WATERWAY:	DATUM:
EAST RIVER	NORTH AMERICAN VERTICAL DATUM 1988 (NAVD88)

EAST SIDE COASTAL RESILIENCY PROJECT

DATE: 11/15/2019	REV.:	SHEET NO 57 OF 66

TURBIDITY BOOM DETAIL

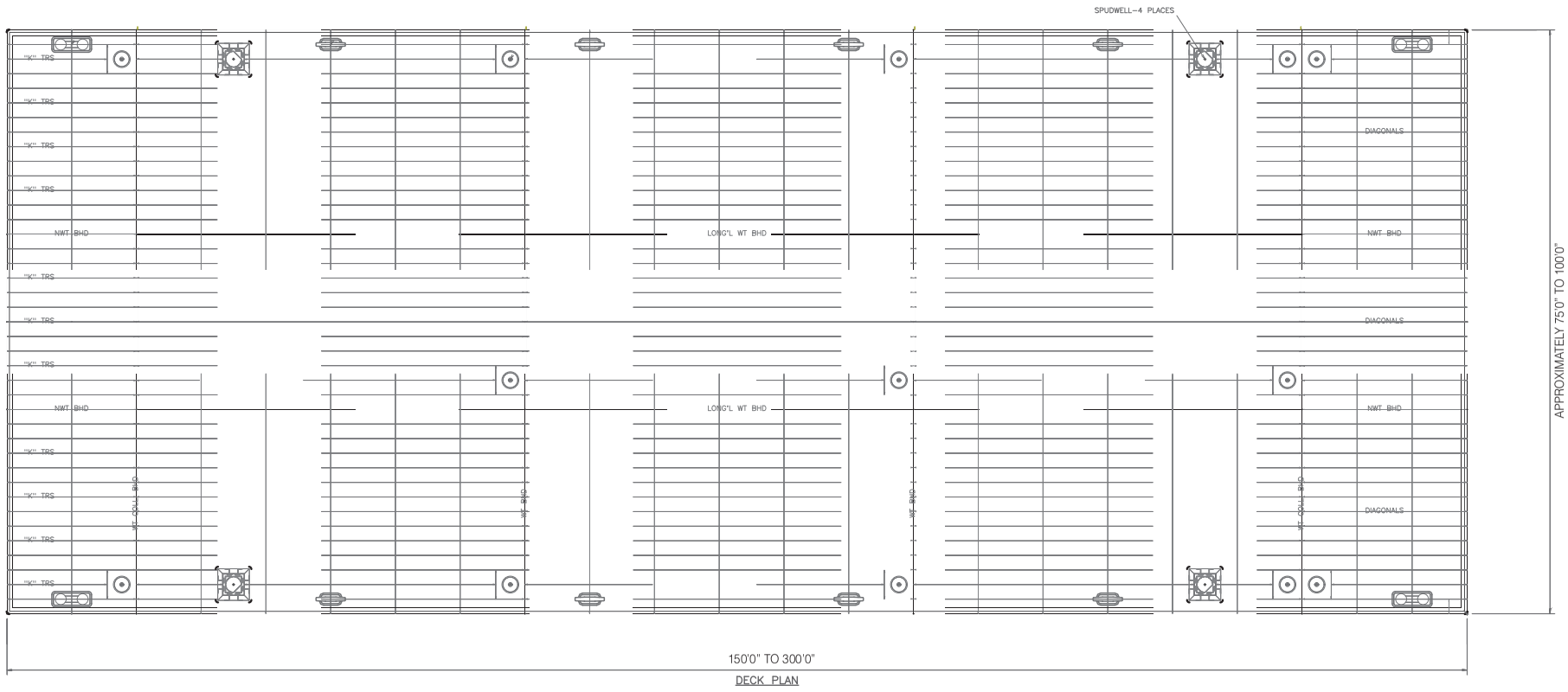

OWNER(S):

CITY OF NEW YORK PARKS & RECREATION
OLMSTED CENTER
FLUSHING MEADOWS CORONA PARK
FLUSHING, NEW YORK 11368

IN:	EAST RIVER	AT:	MONTGOMERY STREET TO CAPT. PATRICK J. BROWN WALK
TOWN: NEW YORK		STATE: NEW YORK	
APPLICATION BY:	NYC DEPARTMENT OF DESIGN AND CONSTRUCTION		
WATERWAY: EAST RIVER		DATUM: NORTH AMERICAN VERTICAL DATUM 1988 (NAVD88)	
EAST SIDE COASTAL RESILIENCY PROJECT			
DATE: 11/15/2019	REV.: 1	SHEET NO 58 OF 66	

SPUD BARGE TYPICAL DETAIL

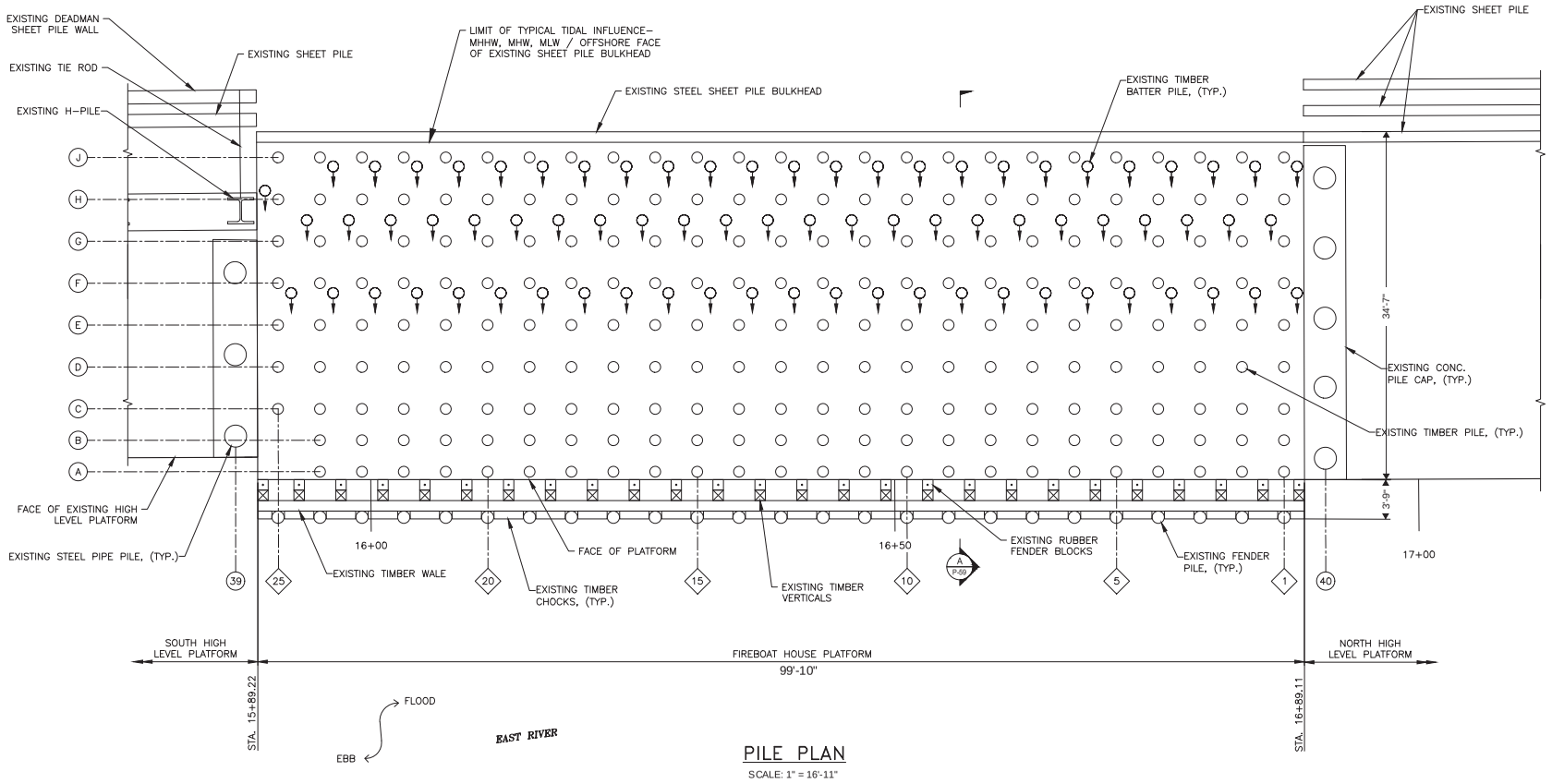

PILE PLAN

SCALE: 1" = 16'-11"

LEGEND

- EXISTING STEEL PIPE PILE
- EXISTING H PILE
- EXISTING BATTER PILE
- EXISTING TIMBER PILE

OWNER(S):

CITY OF NEW YORK PARKS & RECREATION
OLMSTED CENTER
FLUSHING MEADOWS CORONA PARK
FLUSHING, NEW YORK 11368

IN: EAST RIVER AT: MONTGOMERY STREET TO CAPT. PATRICK J. BROWN WALK

TOWN: NEW YORK STATE: NEW YORK

APPLICATION BY: NYC DEPARTMENT OF DESIGN AND CONSTRUCTION

WATERWAY:	DATUM:
EAST RIVER	NORTH AMERICAN VERTICAL DATUM 1988 (NAVD88)

EAST SIDE COASTAL RESILIENCY PROJECT

DATE: 11/15/2019	REV.:	SHEET NO 59 OF 66

FIREBOAT HOUSE PILE PLAN

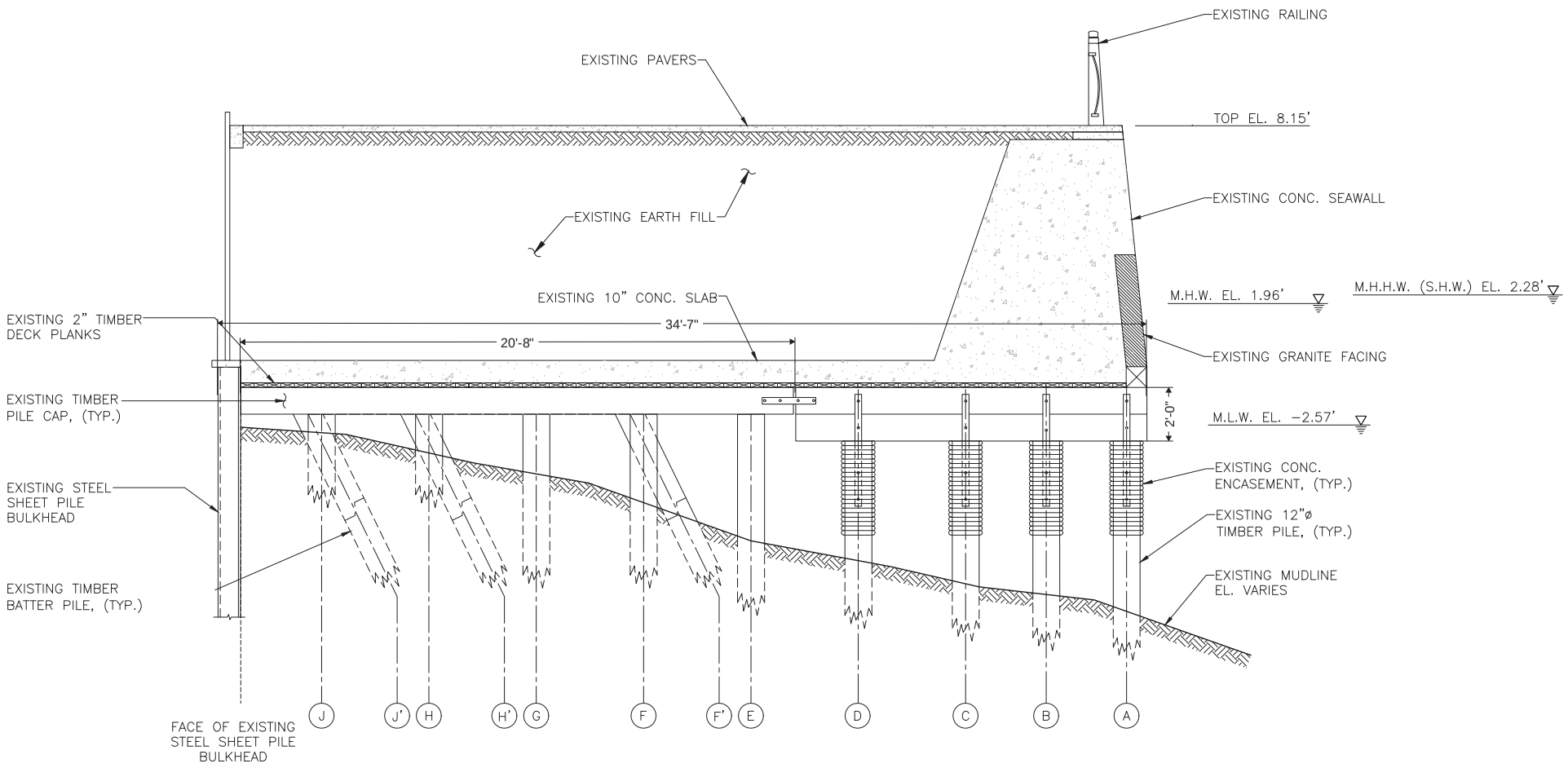

A / P-58 EXISTING FIREBOAT HOUSE PLATFORM

SCALE: 1" = 5'-7/8"

NOTE: TIMBER FENDERS AND FIREBOAT HOUSE FOUNDATION NOT SHOWN FOR CLARITY

OWNER(S):

CITY OF NEW YORK PARKS & RECREATION
OLMSTED CENTER
FLUSHING MEADOWS CORONA PARK
FLUSHING, NEW YORK 11368

IN: EAST RIVER AT: MONTGOMERY STREET TO CAPT. PATRICK J. BROWN WALK
TOWN: NEW YORK STATE: NEW YORK
APPLICATION BY: NYC DEPARTMENT OF DESIGN AND CONSTRUCTION

WATERWAY:	DATUM:
EAST RIVER	NORTH AMERICAN VERTICAL DATUM 1988 (NAVD88)

EAST SIDE COASTAL RESILIENCY PROJECT

DATE: 11/15/2019	REV.:	SHEET NO 60 OF 66

FIREBOAT HOUSE TYPICAL SECTION

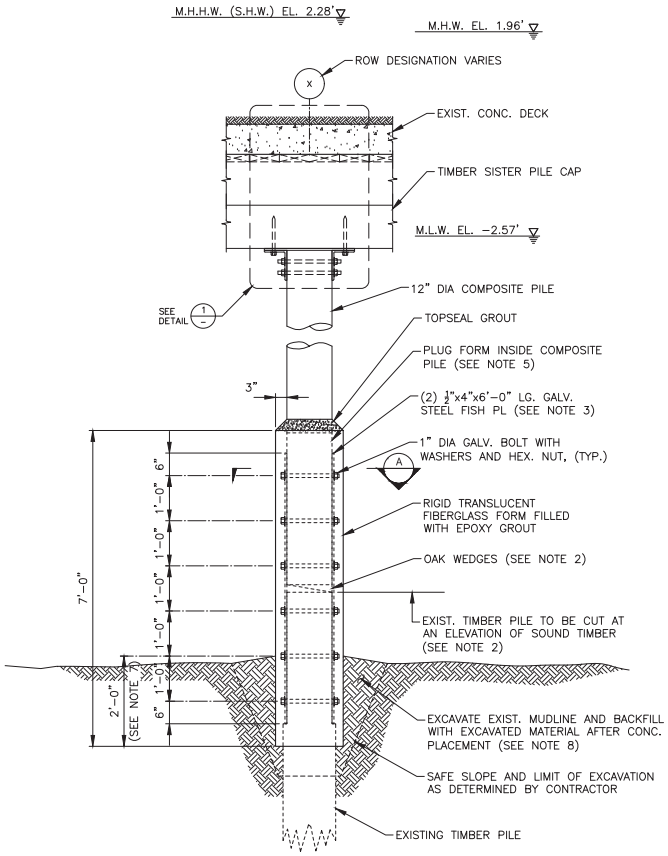

COMPOSITE POST REPLACEMENT
NTS

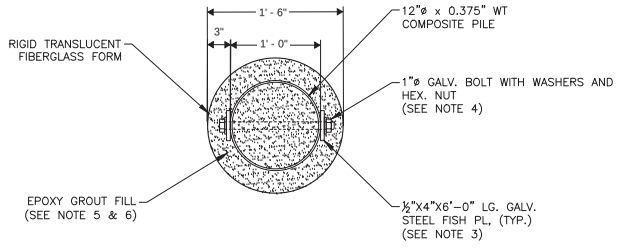

A SECTION
NTS

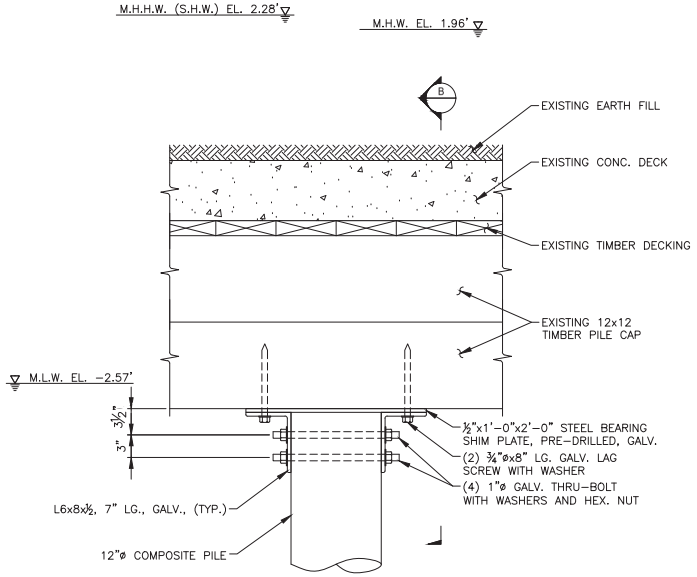

1 DETAIL
NTS

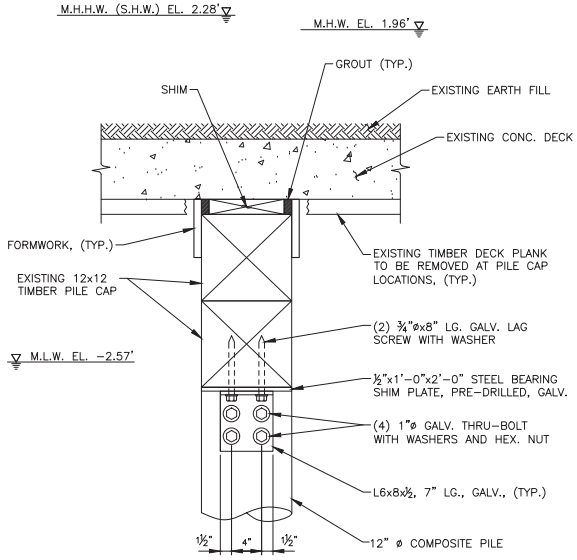

B SECTION
NTS

NOTES:

1. ADJACENT PILES NOT SHOWN FOR CLARITY.
2. CUT LENGTH OF THE EXISTING TIMBER PILES SHALL BE THE GREATER OF A DISTANCE 18" ABOVE THE EXISTING MUDLINE OR THE DISTANCE TO SOUND TIMBER. SOUND TIMBER SHALL BE WHERE MINIMUM 10" PILE DIAMETER EXISTS AND GREATER THAN 90% CROSS−SECTION REMAINS, OR WHERE 8" PILE DIAMETER EXISTS WITH 100% REMAINING CROSS−SECTION (TO BE VERIFIED BY OWNER'S REPRESENTATIVE). TRIM OAK WEDGES AS NEEDED TO MAINTAIN MINIMUM CLEARANCE OF 1−1/2" FROM INSIDE OF FIBERGLASS FORM.
3. CONTRACTOR TO TRIM EXISTING PILE AS NECESSARY TO INSTALL GALVANIZED STEEL FISH PLATES FLUSH BETWEEN THE COMPOSITE PILE AND THE EXISTING TIMBER PILE. WHERE THE EXISTING PILE IS SMALLER THAN THE COMPOSITE PILE, OAK SPACER BLOCKS SHALL BE PLACED BETWEEN THE EXISTING PILE AND FISH PLATES TO MAINTAIN A FLUSH CONNECTION WITH THE COMPOSITE PILE.
4. CONTRACTOR TO TRIM EXCESS PROJECTING PORTION OF GALVANIZED BOLTS, IF NECESSARY, TO ACCOMMODATE THE RIGID FIBERGLASS FORMWORK WITH A MAXIMUM ANNULUS OF 3 INCHES.
5. CONTRACTOR SHALL PRE−INSTALL A PLUG FORM INSIDE THE COMPOSITE PILE AND FILL THE COMPOSITE PILE WITH CEMENTITIOUS GROUT, TO A MINIMUM ELEVATION OF 1 FOOT ABOVE THE HIGHEST THRU−BOLT. CONTRACTOR IS RESPONSIBLE FOR PROVIDING MEANS AND METHODS TO PLACE FILL AND ALLOW EXCESS WATER TO FLOW OUT FROM INSIDE THE COMPOSITE PILE.
6. PUMP PORTS MUST BE CAPPED AFTER EPOXY PLACEMENT. CONTRACTOR TO PROVIDE MEANS AND METHODS FOR MATERIAL PLACEMENT.
7. THE BOTTOM ELEVATION OF THE FIBERGLASS FORMWORK AND EPOXY GROUT FILL SHALL EXTEND 1 FT BELOW THE BOTTOM BOLT OF THE SPLICE CONNECTION. THE FORMWORK AND EPOXY GROUT FILL SHALL ALSO EXTEND NO LESS THAN 2 FT BELOW THE EXISTING MUDLINE ELEVATION. THE DEPTH OF EXCAVATION MAY VARY IN ACCORDANCE WITH THE ELEVATION OF SOUND TIMBER AT EACH REPAIR LOCATION.
8. PER UNDERWATER INSPECTION, SOILS NEAR THE MUDLINE ARE COMPOSED OF A MIX OF HARD SOILS AND STONE WHICH VARY FROM 4" COBBLES TO 24" BOULDERS. THE CONTRACTOR SHALL EXCAVATE AND BACKFILL THE SITE TO THE ELEVATIONS AND LIMITS SHOWN AND AS NEEDED TO MEET THE REQUIREMENTS OF CONSTRUCTION.
9. EXISTING TIMBER DECKING DIRECTLY ABOVE THE EXISTING TIMBER PIER CAP IS TO REMAIN. TIMBER DECKING IN LOCATIONS WHERE TIMBER PILE CAPS ARE TO BE INSTALLED IS TO BE REMOVED.

OWNER(S):

CITY OF NEW YORK PARKS & RECREATION
OLMSTED CENTER
FLUSHING MEADOWS CORONA PARK
FLUSHING, NEW YORK 11368

IN: EAST RIVER AT: MONTGOMERY STREET TO CAPT. PATRICK J. BROWN WALK
TOWN: NEW YORK STATE: NEW YORK
APPLICATION BY: NYC DEPARTMENT OF DESIGN AND CONSTRUCTION

WATERWAY:	DATUM:
EAST RIVER	NORTH AMERICAN VERTICAL DATUM 1988 (NAVD88)

EAST SIDE COASTAL RESILIENCY PROJECT

DATE: 11/11/19	REV.:	SHEET NO 61 OF 65

FIREBOAT HOUSE PROPOSED REPAIRS (1 OF 2)

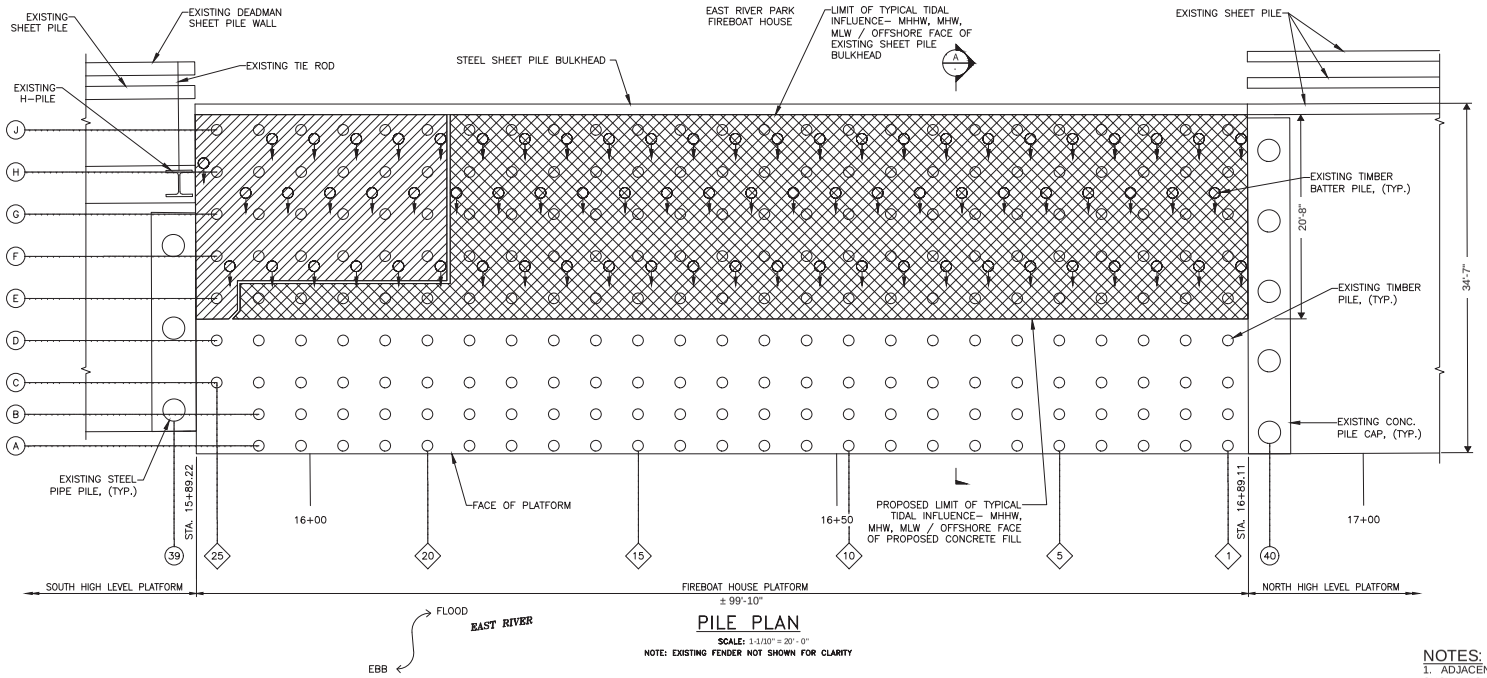

PILE PLAN

SCALE: 1-1/10" = 20' - 0"

NOTE: EXISTING FENDER NOT SHOWN FOR CLARITY

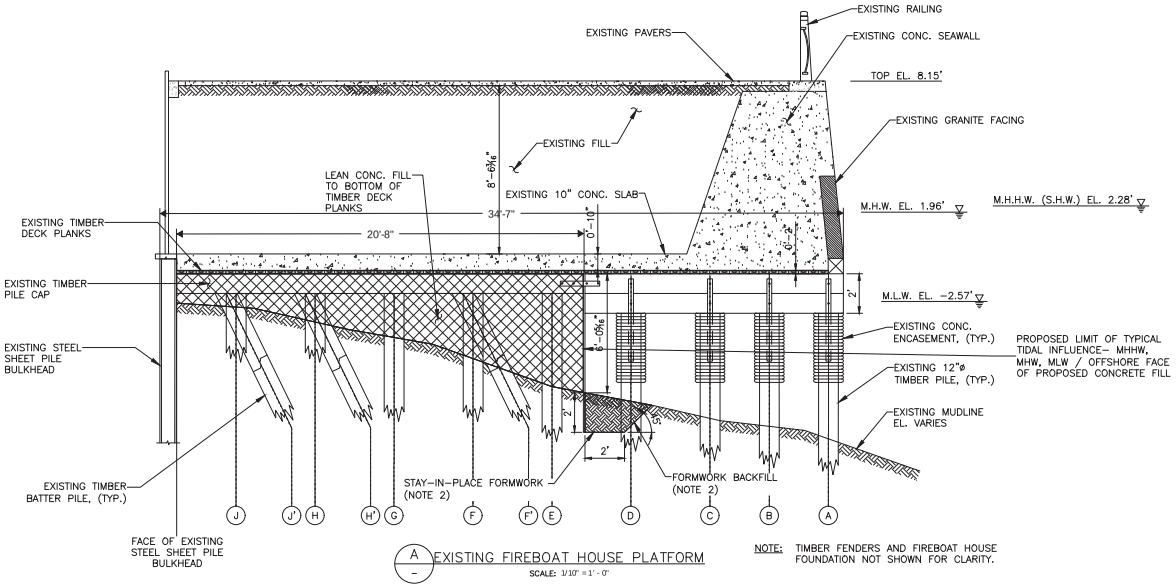

A — EXISTING FIREBOAT HOUSE PLATFORM

SCALE: 1/10" = 1' - 0"

NOTE: TIMBER FENDERS AND FIREBOAT HOUSE FOUNDATION NOT SHOWN FOR CLARITY.

NOTES:
1. ADJACENT & DERELICT ELEMENTS ARE NOT SHOWN FOR CLARITY.
2. BOTTOM OF FORM SHALL BE EMBEDDED A MINIMUM OF 2'-0" INTO EXISTING MUDLINE AND SHALL EXTEND UP TO THE ELEVATION OF THE UPPER TIMBER DECK PLANKS. EXCAVATED MATERIAL, LESS TIMBER DEBRIS, SHALL BE SALVAGED AND USED TO BACKFILL FORMWORK.
3. A TOTAL OF 98 PILES TO BE REPLACED WITH PROPOSED COMPOSITE POSTS.

LEGENDS:

EXISTING CONCRETE FILL

TO BE FILLED WITH CONCRETE

OWNER(S):

CITY OF NEW YORK PARKS & RECREATION
OLMSTED CENTER
FLUSHING MEADOWS CORONA PARK
FLUSHING, NEW YORK 11368

IN: EAST RIVER AT: MONTGOMERY STREET TO CAPT. PATRICK J. BROWN WALK
TOWN: NEW YORK STATE: NEW YORK
APPLICATION BY: NYC DEPARTMENT OF DESIGN AND CONSTRUCTION

WATERWAY:	DATUM:
EAST RIVER	NORTH AMERICAN VERTICAL DATUM 1988 (NAVD88)

EAST SIDE COASTAL RESILIENCY PROJECT

DATE: 11/15/2019	REV.:	SHEET NO 62 OF 66

FIREBOAT HOUSE PROPOSED REPAIRS (2 OF 2)

(NO TEXT ON THIS PAGE)

Addendum	Addendum Question No.	Bidder's Question	Response
4	1	Volume 1 of 3 Bid Booklet; page A-8; OTHER; 3. PK-ESCR 025, PK-ESCR 099. These items are not located in the contract bid schedule but mentioned in the special experience requirements. Please provide direction.	Refer to Addendum 3, Article 3. The references are to Section numbers, not Item numbers. The Bidder's attention is drawn to Article (C) on Bid Booklet page A-14R.
4	2	Volume 1 of 3 Bid Booklet; page A-8; OTHER; 8. PK-ESCR 653. This item requires special experience for installation at the southern M&O canopy. Will the same the qualification be needed in the northern canopy?	Refer to Addendum 3, Article 3. The references are to Section numbers, not Item numbers. The Bidder's attention is drawn to Article (C) on Bid Booklet page A-14R.
4	3	Volume 1 of 3 Bid Booklet; page A-8; OTHER; 9. PK-ESCR 928. This item is not located on the contract bid schedule but mentioned in the special experience requirements. Please provide direction.	Refer to Addendum 3, Article 3. The references are to Section numbers, not Item numbers. The Bidder's attention is drawn to Article (C) on Bid Booklet page A-14R.
4	4	Volume 1 of 3 Bid Booklet; page A-8; OTHER; 11. 572.0002NN01. This item is not located on the contract bid schedule but mentioned in the special experience requirements and located in the special bridge specifications. Confirm where the cost of the metalizing is carried.	The references are to Section numbers, not Item numbers. Please refer to the specification in the BRIDGES-Pages for payment information. The Bidder's attention is drawn to Article (C) on Bid Booklet page A-14R.
4	5	Volume 3 of 3 Bid Booklet; Building specifications; Section 01 11 00 Summary of Work; page BLDG-1; Summary of work. Bulletins (d) and (e) are two buildings, not on the bid schedule. Is this work required for the contract?	Both M & O Areas 2 and 3 Buildings shall be paid under lump sum Item no. PK-ESCR 049
4	6	Volume 1 of 3 Bid Booklet; page A-11; OTHER; 45. Buildings pages – Section 28 46 00. This item is not located on the contract bid schedule but mentioned in the special experience requirements. Please provide direction.	The references are to Section numbers, not Item numbers. The Bidder's attention is drawn to Article (C) on Bid Booklet page A-14R.
4	7	Volume 1 of 3 Bid Booklet; page A-11; OTHER; 49. PC -pages Section ESCR 50.61 and 50. PC -pages Section ESCR 50.61. These items are not located on the contract bid schedule but mentioned in the special experience requirements and located in the parallel conveyance specifications. Will micro-tunneling be paid under other items?	The references are to Section numbers, not Item numbers. The Bidder's attention is drawn to Article (C) on Bid Booklet page A-14R.

Addendum	Addendum Question No.	Bidder's Question	Response
4	8	Volume 3 of 3; Highway special provisions; B.15 Us Army Corps of Engineers Requirements; Paragraph D; Please provide a list of ESA-listed species that will affect pile driving operations, along with date restrictions.	Winter Flounder: Avoid installing cofferdams between January 15 and May 31. Migrating anadromous fishes (shad and herring): Avoid pile driving, sheetpile installation, and other in-water construction activities occurring outside of the cofferdams from March 1 to June 30.
4	9	No reinforcing details are provided for the transition walls shown on drawings F850 to F857. Drawing F857 Note 3 refers to F852 for reinforcing, but F852 is “intentionally left blank.” Please provide details.	Drawings F852A and F857A have been added. Refer to Addendum 2, Article 2.
4	10	Under general notes, the contractor is to work with outside utility companies for protection and relocation. Will we receive the utility agreements and coordination schedule for any work associated with these utilities?	Please refer to the JB-Pages in Volume 3.
4	11	Contract drawing DS104 (SHT 1180) has conflicting direction, at the bottom of the sheet just right of the Segment 1 and Segment 2 match line there are two (2) notes that state “48” Branch Interceptor (RCFT) to be abandoned in place (69 LF)” but the line designation is indicating abandonment and removal. Please clarify what is to be done with their run of pipe.	The callouts for abandonment/removal have been revised.
4	12	What depths are required for Pre-Drilling Holes for Piles? It states below existing utilities on Delancey Street Bridge drawings, but inverts of existing utilities are not present.	Please refer to the utility plans for invert elevations. The plans (including BT133) call out that pre-drilling is to be performed 10 feet below the bottom of the utility.
4	13	Pile tables for the Delancey and East 10th Street pedestrian bridges are blank. Steel pile details in each bridge dictate the estimated pile tips, but the locations are vague. Please provide accurate estimated pile tips for these locations.	The referenced pile tables for Delancey Street and East 10th Street are intended for As-Built purposes. The actual pile tip elevations will be added after construction. The pile tables on the Steel Pile Details dwg BT133 and BD141 provide the estimated pile tip elevation information and notes clearly which piles are being referred. Drawing BD 141 has been revised with estimated pile tip elevations for the staircase footings. Refer to Addendum 4, Article 3.
4	14	What depths are required for Pre-Drilling Holes for Piles? It states below existing utilities on East 10th Street drawings, but inverts of existing utilities are not present.	Please refer to the utility plans for invert elevations. The plans (including BT133) call out that pre-drilling is to be performed 10 feet below the bottom of the utility.

Addendum	Addendum Question No.	Bidder's Question	Response
4	15	Please provide details of the Montgomery Street roller gate seepage wall	See revised drawing FG110 for details on the concrete seepage wall. Refer to Addendum 4, Article 3.
4	16	Please provide details of the FDR Swing gate seepage wall	See revised drawings FG200, FG209, & FG210 for concrete seepage wall details. Refer to Addendum 4, Article 3.
4	17	Please provide details of the East 14th roller gate seepage wall	See revised drawing FG274 for seepage wall details. Refer to Addendum 4, Article 3.
4	18	Sheeting required for the Comfort Building at East 10th Street. Will contractor be responsible for the design? Will ties rods installed under a previous stage interfere with the proposed foundation? Is any SOE required for this building paid under the temporary sheeting item or under the building item?	The support of excavation (SOE) for the Comfort Building is the Contractor's means and methods, and the Contractor is responsible for the sheeting design. The H-piles should not interfere with ties. All SOE required is included the lump sum building item.
4	19	Sheet 2575 stipulates piles are spaced at 8-0 OC, while pile locations are provided in pile layout plan. Please clarify.	Please follow pile layout plans with tabulated northings and eastings.
4	20	Refer to Drawings BT-142 thru BT-151, Sheets 392 thru 401 of 2791. No details for this structure are provided for the connection of the bottom lateral braces to the end floor beams and to the arch rib knuckle. Should we use similar connections as shown in Detail 2 and 3 on Drawing BC-128 Sheet 138 of 2791?	The similar details shown on sheet BC-128 should be used.
4	21	Refer to Drawings BD-153 thru BD-162, Sheets 280 thru 289 of 2791. No details for this structure are provided for the connection of the bottom lateral braces to the end floor beams and to the arch rib knuckle. Should we use similar connections as shown in Detail 2 and 3 on Drawing BC-128 Sheet 138 of 2791?	The similar details shown on sheet BC-128 should be used.
4	22	On Drawing BD-167 sheet 294 of 2791 and Drawing BT-156 Sheet 406 of 2791 the radial heights of the arch rib are missing. Will the owner please provide them?	All the information to generate the arch geometry is provided with the equation of the parabola and beginning and end depths.

Addendum	Addendum Question No.	Bidder's Question	Response
4	23	The 2 draft OCMC permits for FDR each refer to a different limit and timeframe for full FDR closures. Please confirm that these two permits are exclusive of each other, and that the 10-hr closures on permit dated April 2, 2020 will not count towards the 3 times limit on permit dated April 21, 2020.	Confirmed.
4	24	Please provide the missing contract drawings PH001 - PH021	Refer to Addendum 2, Articles 1 and 2.
4	25	We found some discrepancies on the work permit schedule between the NY DOT and the schedules shown in the drawing TC100 for the FDR drive ROW. Which one is prevailing?	NYCDOT traffic stipulations control.
4	26	According to the different phases shown in the MPT plans (dwgs TC 100 to TC198) we are asking you if the Contractor is allow to work in more than one phase at the same time or it needs to complete the work till the final configuration, within the phase, before to start on the next ones?	Yes. See Sheet TC100, Note 6.
4	27	Drawing TC100 general notes. In the note 24, the item 7.13 paid the repair of any asphalt damaged pavement as well as the item 6.70 mentioned in the note 28. Can you clarify where the temporary asphalt has been paid?	Note 28 refers to the repair of damaged pavement markings, not temporary asphalt.
4	28	Can you clarify if the snow removal is paid under the item 7.13 or under the specification item Escr 7.13 SI Control of snow and ice condition?	Section ESCR-7.13.2.C in the GENERAL SPECIAL SPECIFICATIONS describes the locations for control and removal of snow and ice conditions for public areas in open parks. All other snow and ice removal is covered under Item 7.13 B.
4	29	Reference Site Demolition Drawings PDS002, PDS103, PDS104 and others. These drawings fail to show the complete westward Limit of work. Kindly clarify.	The westward limit of work can be found in the BC (Corlears Hook Bridge), BD (Delancey Street Bridge), and BT (10th Street Bridge) series.
4	30	Reference Drawings PDT100. Kindly clarify the note “Pier 42 (By others). Kindly clarify. We interpret this note to mean Pier 42 Contractor will “protect in place”.	All trees within the project limits that are installed under the seperate Pier 42 work will need to be protected in place as part of the SANDRESM1 project.
4	31	Please provide Milestone Drawings ARM001-ARM011 as we do not see these in the current bid documents provided	Refer to Addendum 2, Articles 1 and 2.

Addendum	Addendum Question No.	Bidder's Question	Response
4	32	Please provide NYC Parks Standard Details as we do not see these in the current bid documents provided	Refer to Addendum 2, Articles 1 and 2.
4	33	Please provide Appendix A: Signed & Sealed Project Survey as we do not see these in the current bid documents provided	Refer to Addendum 3, Article 3.
4	34	Please provide Appendix A: FEDERAL PROJECT CONSTRUCTION OF SEWERS EAST RIVER DRIVE E.10TH ST. TO E.11TH ST. AND AT FOOT OF EAST 11TH STREET EAST RIVER DRIVE TO THE BULKHEADLINE as we do not see these in the current bid documents provided	Refer to Addendum 3, Article 3.
4	35	Please provide Appendix A: BRANCH INTERCEPTOR MANHOLES CONTRACT NO.4 SOUTH BRANCH INTERCEPTING SEWER-EAST SIDE MANHOLES PLANS AND SECTIONS SHEET 58 OF 71 as we do not see these in the current bid documents provided	Refer to Addendum 3, Article 3.
4	36	Please provide Appendix A: CONTRACT NO.4 SOUTH BRANCH INTERCEPTING SEWER-EAST SIDE EAST 10TH STREET - AVE. D TO EAST RIVER PARK PLAN AND PROFILE SHEET 24 OF 71 as we do not see these in the current bid documents provided	Refer to Addendum 3, Article 3.
4	37	Please provide Appendix A: STRUCTURAL REFERENCE CONTRACT NO.4 SOUTH BRANCH INTERCEPTING SEWER - EAST SIDE, MANHOLE 23, PLANS AND SECTIONS SHEET 57 OF 71 as we do not see these in the current bid documents provided	Refer to Addendum 3, Article 3.
4	38	Please provide Appendix A: RECONSTRUCTION OF THE PROMENADE AND LANDSCAPE FROM JACKSON STREET TO EAST 14TH STREET, BETWEEN THE FDR DRIVE AND THE EAST RIVER, IN EAST RIVER PARK, BOROUGH OF MANHATTAN as we do not see these in the current bid documents provided	Refer to Addendum 3, Article 3.
4	39	Please provide Appendix A: THE PARTIAL RECONSTRUCTION OF THE FIRE BOAT HOUSE LOCATED OPPOSITE GRAND STREET BETWEEN THE F.D.R. DRIVE AND THE EAST RIVER IN EAST RIVER PARK, BOROUGH OF MANHATTAN as we do not see these in the current bid documents provided	Refer to Addendum 3, Article 3.

Addendum	Addendum Question No.	Bidder's Question	Response
4	40	Please provide Appendix A: THE RECONSTRUCTION OF THE BULKHEADS AND RELIEVING PLATFORMS FROM JACKSON STREET TO 14TH STREET BETWEEN THE FDR DRIVE AND THE EAST RIVER, IN EAST RIVER PARK(2013) as we do not see these in the current bid documents provided	Refer to Addendum 3, Article 3.
4	41	Please provide Appendix A: THE RECONSTRUCTION OF THE BULKHEADS AND RELIEVING PLATFORMS FROM JACKSON STREET TO 14TH STREET BETWEEN THE FDR DRIVE AND THE EAST RIVER, IN EAST RIVER PARK (2004) as we do not see these in the current bid documents provided	Refer to Addendum 3, Article 3.
4	42	Please provide Appendix A: EAST RIVER DRIVE IMPROVEMENT FROM MONTGOMERY STREET TO GRAND STREET (1940) as we do not see these in the current bid documents provided	Refer to Addendum 3, Article 3.
4	43	Please provide Appendix A: 1940 CROSS SECTIONS OF BULKHEAD as we do not see these in the current bid documents provided	Refer to Addendum 3, Article 3.
4	44	Please provide Appendix A:BULKHEAD WALL AND SEWER CONSTRUCTION, DREDGING AND FILLING - EAST RIVER DRIVE (1937) as we do not see these in the current bid documents provided	Refer to Addendum 3, Article 3.
4	45	Please provide Appendix A: BULKHEAD WALL AND FILLING - EAST RIVER DRIVE (1938) as we do not see these in the current bid documents provided	Refer to Addendum 3, Article 3.
4	46	Please provide Appendix A: RELOCATION OF 345 KV FDRS (2003) as we do not see these in the current bid documents provided	Refer to Addendum 3, Article 3.
4	47	Please provide Appendix A: CONSTRUCTION OF SEWERS IN EAST RIVER DRIVE E. 11TH ST TO E. 13TH ST. (1935)as we do not see these in the current bid documents provided	Refer to Addendum 3, Article 3.
4	48	Please provide Appendix A: CONSTRUCTION OF FRANKLIN D. ROOSEVELT DRIVE STATE HIGHWAY 91-4 (1995) as we do not see these in the current bid documents provided	Refer to Addendum 3, Article 3.
4	49	Please provide Appendix A: EAST RIVER RELIEVING PLATFORM - PILE DRIVING LOGS (2005-2010) as we do not see these in the current bid documents provided	Refer to Addendum 3, Article 3.

Addendum	Addendum Question No.	Bidder's Question	Response
4	50	Please provide Appendix A: DYNAMIC LOAD TEST (2005-2009) as we do not see these in the current bid documents provided	Refer to Addendum 3, Article 3.
4	51	Please provide Appendix A: CON EDISON SLEEVE DETAILS AND METHOD OF SEALING H.P. CABLE PIPE as we do not see these in the current bid documents provided	Refer to Addendum 3, Article 3.
4	52	Please provide Appendix A: RECONSTRUCTION ON FDR DRIVE - AVENUE C VIADUCT E. 18TH STREET TO E. 25TH STREET STATE HIGHWAY 93-4 (2000) as we do not see these in the current bid documents provided	Refer to Addendum 3, Article 3.
4	53	Please provide Appendix A: PLANS FOR RECONSTRUCTION OF A PORTION OF THE CITY OF NEW YORK: FRANKLIN D ROOSEVELT DRIVE (SOUTH ST. VIADUCT) (1980) as we do not see these in the current bid documents provided	Refer to Addendum 3, Article 3.
4	54	The span lengths for the Esplanade Deck that are shown on the girder framing plan on sheets 855 thru 862 do not match with the span lengths that are shown on the structural elevation drawings on sheets 836 thru 847 and they also do not align with the girder beam detail tables on sheets 929 thru 934 of 2791. Also the pier numbers are blank on some of the girder framing sheets and the pier numbers that are labeled do not seem to match with the pier numbers on the structural framing elevation. Please clarify.	Drawing series WS520, WS450, along with WS700 to WS707 and WS660 to WS667 have been revised. Refer to Addendum 4, Article 3. Please note that span lengths are measured between the adjacent pier centerlines along the construction baseline (as defined in WS510). Beam length starts 3” MIN from pier centerline (see SHEETS WS660 THROUGH WS667)

Addendum	Addendum Question No.	Bidder's Question	Response
4	55	Please add an allowance item for obstructions we run into when driving piling	Differing site conditions will be handled according to the Standard Construction Contract. However, the Contractor's attention is drawn to the following items which are intended to reduce the number of differing site conditions encountered: 1. Requirements for predrilling and removal of known obstructions such as timber cribbing where necessary (such as in Sections ESCR-5, ESCR-5.1, ESCR-551, and ESCR-552). 2. Bid items for removal of known obstructions (such as in Section ESCR-6.27) 3. Piling bid items that include predrilling. (such as in Sections ESCR-551 ESCR-552, and 551.03950017) 4. Piling bid items for specific conditions, such as installation through timber cribbing (such as in Sections ESCR-551 and ESCR-552.)
4	56	Please clarify the regions specified in bid items 940 and 941	Sequence no. 940, Item No. PK-ESCR 929 is the Gouverneur Gardens property that is impacted by construction, mainly on the Montgomery Street and South Street building frontages. PDS120 and the 320 sheets in each of the landscape series (LM320, LG320, LP320, etc.) will most clearly define this area. However, items for salvage will be defined at the walk through with the Gouverneur Gardens representative. Sequence no. 941, Item No. PK-ESCR 930, is in East River Park at the existing Lower Side Water Park in Reach D. Sheet PDS103 shows this area.
4	57	MPT drawing TC 180 note 5 mentions that all work conducted in this stage shall be conduct between the hours indicated in the schedule 1 for the FDR. Is this schedule valid also for the work related to the park, far from the interference of the FDR and not involved in the traffic maintenance?	Note 5 refers to work that requires an FDR Drive Northbound Right Lane Closure, not for work in the park.
4	58	MPT drawing TC 138 note 5 mentions that all work conducted in this stage shall be conduct between the hours indicated in the schedule 1 for the FDR (tc100). Is this schedule valid also for the work related to the park, far from the interference of the FDR and not involved in the traffic maintenance?	Note 5 refers to work that requires an FDR Drive Northbound Right Lane Closure, not for work in the park.

Addendum	Addendum Question No.	Bidder's Question	Response
4	59	Is August 1st,2022 a milestone for Phase 1 completion? And it's subject to contractual penalty or acceleration bonus?	The Phase 1 completion milestone is 8/1/2023. See Spec. Section HW-900P
4	60	Can you specify which retaining walls need to be completed by 02/01/2023?	There is no 2/1/2023 milestone related to retaining walls.
4	61	Will Stay in Place forms be permitted on Corlears Hook Bridge, Delancey St Bridge, E. 10th St. Bridge, Houston St Bridge and the Waterfront Esplanade Slab?	Yes.
4	62	5. The Reach K – Advanced Traffic Control Layout (TC 183, Sheet 2732) is supposed to be in place during all constructions stages or only during Reach K construction. Please clarify.	TC 183 applies for any temporary right lane closure of the FDR Drive. See TC 182 as an example of a work area that may require TC 183.
4	63	Should the temporary bridging mentioned in drawing TC 156/Sheet 2705 be paid under 6.70 Maintenance and Protection of Traffic or as separate item? Please clarify	It will be paid under Item 6.70.
4	64	Please clarify where the REGRADING DRAWINGS can be found for the areas marked for removal under ITEM NO. 6.02 AAN.	Refer to drawings LG300 and FG130 through FG132.
4	65	How are the areas marked as DEMO-CLEAR AND GRUBB to be paid?	See Note 12 on drawing F100.
4	66	Please provide proposed contour lines, typical sections, and cross sections for the pavement reconstruction of FDR.	Refer to drawings FG130 through FG132.
4	67	Phasing dwg PH009 states "East 6th Street Bridge to be Closed and Modified During Phase 1". Please provide details of the modifications to the 6th street pedestrian bridge	The modifications referenced are to the access and stairs to the East 6th street bridge from the park. The existing bridge is to remain. Drawings detailing this work include PDS107, LD837, LD838, LD933, LG307, and PUD307.

Addendum	Addendum Question No.	Bidder's Question	Response
5	1	General notes; sheet 21; 7.08; Please provide specifications for 8.25PT,and 8.52FP	Refer to Addendum 4, Article 2.
5	2	General notes; sheet 21; 7.09; Pay items 8.52WSF-A through D is not on the bid schedule. Please provide direction	Refer to Addendum 5, Article 1
5	3	Contract drawings DS100 (SHT 1176) and DS101 (SHT 1177) refer to 'Item No. 6.36 DR' this pay item is not part of the bid breakdown please provide.	Refer to Addendum 5, Article 1.
5	4	Please refer to Contract Drawing DS703 (SHT 1283) the sheet description is "Manhole Schedule Sheet 1 of 2" sheet 2 of 2 appears to be missing please provide.	Drawing DS703 has been renamed to "MANHOLE SCHEDULE". Refer to Addendum 5, Article 3.
5	5	14th Street crossing gate section c states micro piles. Where can we find these micro piles and what pay item are they associated with?	There are no micropiles at this location. Drawing FG293 has been revised. Refer to Addendum 5, Article 3.
5	6	Due to the size of the scope, complexity, large number of drawings and specs, and specialized nature of the project, our subcontractors and suppliers require additional time to prepare comprehensive and competitive bid packages. We request a 6 week postponement in order to secure competitive pricing for this project.	Refer to Addendum 4, Article 1.
5	7	Shaft foundations for Sports Light Tower, fields 1-6. Which pay item is associated with the construction of the shafts?	Item 670.0145, Foundation for Light Standards 45 Feet Long. Refer to Addendum 5, Article 1.
5	8	Shaft foundations shown on sheet #2048. What size spiral is required? Differing details state #4 bar or a #5 bar. Please clarify.	Drawing LD927 has been revised. Refer to Addendum 5, Article 3.
5	9	Sheet 2219 M&O Canopy 1 Sections are showing piles in the pile caps, but structural drawings have the footing bearing on soil. Does Canopy 1 require piles?	Drawing A130 has been revised. Refer to Addendum 5, Article 3.
5	10	Sheet 2272, M&O Area 2 Building has HP12x53 piles within the spread footing. What tip elevations are required for these piles. Additionally, what pay item will the piles be paid under?	Item 551.012053. Refer to Addendum 5, Article 1. See revised drawing S-206.00 for tip elevation. Refer to Addendum 5, Article 3.
5	11	Sheet 2306 M&O Area 2 Prefabricated Building Sections are showing piles in the pile caps, but structural drawings have the footing bearing on soil. Does the Area 2 Building require piles?	Drawing A330 has been revised. Refer to Addendum 5, Article 3.

Addendum	Addendum Question No.	Bidder's Question	Response
5	12	Sheet 2329 M&O Area 3 BLDG Sections are showing piles in the pile caps, but structural drawings have the footing bearing on soil. Does the Area 3 Building require piles?	Drawing A430 has been revised. Refer to Addendum 5, Article 3.
5	13	Sheet 2382 Track Building Sections are showing piles in the pile caps, but structural drawings have the footing bearing on soil. Does the Track Building require piles?	Drawings A530 and A531 have been revised. Refer to Addendum 5, Article 3.
5	14	Sheet 2481 Tennis Building Sections are showing piles in the pile caps, but structural drawings have the footing bearing on soil. Does the Tennis Building require piles?	Drawing A630 has been revised. Refer to Addendum 5, Article 3.
5	15	Piles for Comfort Station East 10th Street are paid under 551.014073 or under the building item?	Piles and foundation are to be paid under the building item. Refer to Addendum 4, Article 2.
5	16	Please provide a boring plan and borings for the Comfort Station at East 10th Street	Soil borings used for the design of the E. 10th Street comfort station can be found on drawing BT108 (boring B-21) and drawing B-F-014 (boring P1I-3A).
5	17	Sheet 2575; Note 1 states "Foundation is on drilled piles as per geotechnical report." Please provide this report and is the note suggesting that H-Piles are to be drilled for this foundation.	Drawing S702 has been revised. Refer to Addendum 5, Article 3.
5	18	What pay items are to be used for the bearings shown on Drawing BT-141 Sheet 391 of 2791?	Drawing BT141 has been revised. Refer to Addendum 5, Article 3.
5	19	What pay items are to be used for the bearings shown on Drawing BD-152 Sheet 279 of 2791?	Drawing BD152 has been revised. Refer to Addendum 5, Article 3.
5	20	What pay items are to be used for the bearings shown on Drawing BC-125 Sheet 135 of 2791?	Drawing BC125 has been revised. Refer to Addendum 5, Article 3.
5	21	Drawing BT-144 Sheet 394 of 2791, Drawing BD-155 Sheet 282 of 2791 and Drawing BC -107 Sheet 117 of 2791 have conflicting pay items for the structural steel. We believe the bottom floor beams, the lower lateral braces, the bottom tie girders and the upper arch rib lateral braces are to be paid for under Item 564.0501. We also believe the arc ribs and the arch rib knuckles are to be paid for under item 564.0502. Is this correct?	Drawings BD155, BT144, and BC107 have been revised. Refer to Addendum 5, Article 3.
5	22	If the steel in the question above is to be paid under the items stated above which pay item will be used for the splice plates between the arch rib knuckles and the bottom tie girders?	Drawings BD158, BT147, BC131 have been revised. Refer to Addendum 5, Article 3.

Addendum	Addendum Question No.	Bidder's Question	Response
5	23	Drawings F850 thru F856, F400 and F401 show conflicting information for the transition wall. Profile sheet shows top of sheet pile to El. +16.0, but sections show sheet pile extends only to the footing. Please clarify.	Drawings F400 and F401 have been revised with correct elevations. Refer to Addendum 5, Article 3.
5	24	Drawing F850 and F851 show conflicting sheet pile alignment. F851 show sheet piles on the FDR side of the Con Ed transmission lines, but F850 show all sheet pile on the park side. Please clarify	Drawing F851 currently shows sheet piles on the park side, which corresponds to drawing F850.
5	25	Utility crossing schedule drawing F710 refers to drawing FD103 for utilities B-6 to B-16 but no such drawing is provided. On F711, multiple crossings refer to drawing FXXX. Please clarify	Drawings F710 and F711 have been revised to include correct cross references. Refer to Addendum 5, Article 3.
5	26	Utility crossing schedule drawing F711 refers to drawing FG301 but no such drawing is provided. Please clarify.	Drawing F711 has been revised to include the correct cross references. Refer to Addendum 5, Article 3.
5	27	Multiple utility crossings are labeled Type G on drawing F710 and F711 but drawing F706 for Type G is intentionally left blank. Please clarify.	All "Type G" references should be "Type E". Drawings F710 and F711 have been revised. Refer to Addendum 5, Article 3.
5	28	F100-F110 drawings label shared use pathway pavement, curb, etc. to be removed under item 6.02 AAN, but F120 section drawing indicates different pay item numbers for the pavement and curb. Please clarify which pay item is correct.	Pay items have been revised on drawing F120. References to F120 have been added on drawings F101, F102, and F109. Refer to Addendum 5, Article 3.
5	29	Please provide the missing contract drawing SM328	Drawings SM311-SM316 have been revised to reference drawing SM318 instead of SM328, which does not exist. Refer to Addendum 5, Article 3.
5	30	Please provide as built plans for the existing bridge structures, ramps and other associated structural elements that will be demolished, including but not limited to Corlears Hook Bridge, Delancey Street Bridge, East 10th Street Bridge and Houston Street Bridge.	Refer to Addendum 3, Article 3.
5	31	Reference: Corlears Hook Bridge, Drawing BC119, Sheet 129.Notes at Section B-West Abutment Section and Section D-East Abutment Section reads: “Abutment (MP) Item No. 555.02000001”. This item is not part of the bid breakdown. Please clarify.	Refer to Addendum 5, Article 1.

Addendum	Addendum Question No.	Bidder's Question	Response
5	32	Reference: Corlears Hook Park, Drawing BC119A, Sheet 129A. a) Please provide missing retaining wall foundation and wall reinforcing. b) Please confirm that retaining wall footing width is 12'-0". c) Note at Retaining Wall Section reads: "6" Crushed Stone Compacted Subgrade (Stone: Item No. 65.7156)". This item is not part of the bid breakdown. Please clarify.	Drawing BC119A has been revised. Refer to Addendum 5, Article 3.
5	33	Reference: Corlears Hook Bridge, Drawing BC149 & 113, Sheet 160 & 125. Please confirm that payment for construction of curb on top of wingwalls and retaining walls, will be made under Items No. 555.09 and 556.0202.	Yes, payment for curb will be under items 555.09 and 556.0202
5	34	Due to the size and scope of the project as well as the nature of unit price contracts, we propose the addition of a bid item for Project Management and Administration to be paid on monthly basis. We believe this is mutually beneficial to NYCDDC and the GC and will produce a more competitive bid, since it would reduce the uncertainties for recovering project indirect cost and fixed costs for items that could be omitted or for underruns. Otherwise, we would need to include a contingency that NYCDDC could save.	The costs for overhead, including Project Management and Administration must be included in the costs bid for all items.
5	35	REDACTED	

PREVIOUSLY ANSWERED PBQ PAGE 13/150

Addendum	Addendum Question No.	Bidder's Question	Response
5	36	We did not see where the owner had provided us with any drawings for the existing esplande/floodwall. Can you please provide these so that we can accurately develop our demolition quantities and pricing.	Refer to Addendum 3, Article 3.
5	37	The Superstructure removal notes on sheets 105, 220 and 345 of 2791 indicate that lead protection is required during the removal of loose/peeling paint from the existing steel structures for demolition. In order to properly price the demolition of the existing bridges or any other structures on the project we need to be aware if there is any presence of lead paint, lead, asbestos or any other contaminated materials in any of these structures. Can you please provide us with any type of lead or asbestos reports that are available for the project.	Asbestos and Lead Paint Survey Report has been provided. Refer to Addendum 5, Article 2.
5	38	Note No 4 on Sheet No 1095 of 2791 indicates that there will be Dynamic Pile Load Test, Item ESCR-551.24.05 DT, Static Compression Test, Item ECSCR-551.24.05 ST and Lateral Load Test, Item ESCR-551.24.05 LT. There is no Bid Item listed within the Schedule of values for these items. Please provide the appropriate bid items and quantities for each for the Schedule of Values.	Items ESCR-551.24.05 DT, ESCR-551.24.05 LT, and ESCR-551.24.05 ST have been added to the bid schedule. Refer to Addendum 5, Article 1.

Addendum	Addendum Question No.	Bidder's Question	Response
5	39	Sheet 135 of 2791 indicates that the bearings for the Corlears Hook Bridge are to be paid for in Item 565.1521 TYPE M.R. Expansion Bearings (0 to 225 KIPS and also in Item 565.1721 TYPE M.R. Fixed Bearings (0 to 225 Kips). The table below on the same drawings indicates that these bearings exceed the 225 Kips design capacity whereas other bearings for the other pedestrian bridges have less design capacity and are classified in the 225 to 450 Kips Bid Item. Also the table list 2 of the bearings for this bridge to be guided bearings and not fixed or expansion. Should there not be a separate bid item for guided bearings? This also leads to the question as to whether or not the bearings for the other two pedestrian bridges (Delaney Street and 10th Street) as to whether or not they should also be guided bearings. Please provide clarification as to where these bearings are paid for and if they are classified properly.	Drawing BC125 has been revised. Refer to, Addendum 5, Article 3.
5	40	There is no "Specification Type" reference on Sheet PD-5 in the SANDRESM1 Volume 3.pdf file for "Bid" Item Number 557.2001 Structural Approach Slab with Integral Wearing Surface Type 1 Friction. Please provide direction as to whether or not there will be a special specification provision for this item or if we are to follow the NYSDOT Specification.	Page PD-5 has been revised. Refer to Addendum 4, Article 2.
5	41	On sheet 1083 of 2791 in the lower right hand corner of the drawings the box indicates that these are for "30% Submission". Please provide the "For Bid" drawing.	Drawing FG133 (the error was on sheet 1085, not 1083) has been revised to say "For Bid". Refer to Addendum 5, Article 3.
5	42	Reference sheets 873-902. Sections show haunch concrete paid using item ESCR 563.03. This item does not exist in the bid schedule. Please include or clarify pay item.	The concrete haunch shall be paid under items ESCR-4.06 HP ES & ESCR 4-14. Drawings WS600 through WS629 have been revised. Refer to Addendum 3, Article 4 and Addendum 5, Article 3.
5	43	Reference Plan sh. 963 & 964 – Proposed Concrete Pile Cap and Concrete Plug reference note 3 and 5. No notes are on these sheets. Please clarify.	Drawings WS758 and WS759 have been revised. Refer to Addendum 5, Article 3.

Addendum	Addendum Question No.	Bidder's Question	Response
5	44	Drawing number DS302 shows that for proposed 12" RCP Branch Interceptor Pipe use item no. 50.21C4012D". However, this item does not exist on provided bid schedule. Please clarify.	Drawing DS302 has been revised. Refer to Addendum 5, Article 3.
5	45	Bid Schedule item no. 51.21C000000C – Cleanout manholes, does not appear on the drawings. Please clarify.	Drawings PUD003 and PUD004 have been revised. Refer to Addendum 5, Article 3.
5	46	MH A02, A03, A04, K08, and K14 appear on the drawings but without an item number. Please clarify which item number do the manholes mentioned fall under.	Item 6.36DR.
5	47	Section A on sheet 603 of 2791 mentions Proposed AZ46-700N (Gr 60) Steel Sheet Pile Item NO ESCR-552.11 46-700N.CPI. There is item within the bid item schedule for this item. Please clarify if there is to be a new bid item or if this item was labeled wrong.	Drawing F704 has been revised to show item ESCR-552.11 46CP. Refer to Addendum 5, Article 3.
5	48	The bid item schedule in SANDRESM1 Volume 1 OF 3 of the specifications does not list Bid Item ESCR-551.36.05.C that is called out in the Floodwall Schedule on sheet 597 of 2791 where is calls out bid item ESCRF-551.36.05.C and Sheet FW-66 in Volume 3 of the Specifications references this bid item as well. Please provide a bid item and quantity for this item or correct the references to it within their drawings and specifications.	Item ESCR-551.36.05.C has been added to the bid schedule. Refer to Addendum 5, Article 1.
5	49	The pile schedule on sheets 1006 and 1011 of 2791 refer to bid item ESCR-551.36.05.SD as this bid item is not listed within the Schedule of Items in SANDRESM1 Volume 1 of 3 of the Specifications. Please clarify	Drawings WS860 and WS870 have been revised to show item ESCR-551.36.05.CSD. Refer to Addendum 5, Article 3.
5	50	The pile schedule on sheets 1002, 1006, 1011 and 1016 refer to bid item ESCR-551.30.01.C and sheet FW-66 of the specifications refer to this bid item as well as this bid items is not listed in SANDRESM1 Volume 1 of 3 document. Please clarify.	Item ESCR-551.30.01.C has been added to the bid schedule. Refer to Addendum 5, Article 1.

Addendum	Addendum Question No.	Bidder's Question	Response
5	51	On sheet 260 of 2791 for the Delancey Street Bridge and on sheet 375 of 2791 for the East 10th Street Bridge show the limits of soil stabilizing elements for these two bridges whereas on sheet 106 of 2791 mentions the Soil Stabilization Element Notes for the Corlears Hook Bridge but we did not see where the limits were shown for this bridge. Please clarify if the Soil Stabilizing Elements are required for the Corlears Hook Bridge and if so provide a drawing for this area..	Stabilization is not required for Corlears Hook Bridge. Drawing BC002 has been revised. Refer to Addendum 5, Article 3.
5	52	Excavation support and protection system plans and sections were provided for all bridge abutments and ramps for the Delancey Street Bridge on sheets 237 and 238 of 2791 and the East 10th Street Bridge on sheets 360 and 361 of 2791 and one was also provided for the west abutment for the Corlears Hook Bridge on sheet 120 and 121 of 2791 but we did not see one for the East Abutment for the Corlears Hook Bridge. Is there a reason why one wasn't provided and if one is available there please provide.	Drawings BC110 and BC111 have been revised. Refer to Addendum 5, Article 3.
5	53	The pile data table on sheet number 133 of 2791 indicates that there are HP12x53 H-piles required for the foundations for the east abutment and the east and west retaining or wingwalls for the Corlears Hook Bridge. There is no bid item for this pile type in the bid item schedule in the SANDRESM1 Volume 1 of 3 document. Please clarify	Item 551.012053 for 12x53 H-piles has been added to the bid schedule. Refer to Addendum 5, Article 1.
5	54	1. Referring to Table on drawing WS 704, AASHTO Girders for Waterfront esplanade extends only up to Span 162. However, as per Cross section on Drawing WS 627 & WS 628, these girders are also required for Span 163, Span 164 & Span 166. a. Please confirm, Girder Schedule provided on drawings WS 702, WS 703 & WS 704 is correct and includes all necessary AASHTO Girders required for Esplanade.	Drawings WS702, WS703, and WS704 have been revised. Refer to Addendum 4, Article 3.

Addendum	Addendum Question No.	Bidder's Question	Response
5	55	Bid Item ESCR-56-2926 Steel Laminated Bearings is called out on sheet 881 of 2791 (WS608) to be used underneath the 21" Prestressed Concrete Hollow Slab Units. The current bid item schedule within Volume 1 of 3 does not list this bid item. The steel laminated bearing tables on sheet numbers 740 thru 742 of 2791 call these bearings to be paid for under Bid Item 565.1925 . Please clarify	See revised WS600 series drawings and bearing tables on revised drawings WS740, WS741, and WS742. Refer to Addendum 5, Article 3.
5	56	Bid Item ESCR-56-2926 Steel Laminated Bearings is called out on sheet 881 of 2791 (WS608) to be used underneath the 21" Prestressed Concrete Hollow Slab Units. The current bid item schedule within Volume 1 of 3 does not list this bid item. The steel laminated bearing tables on sheet numbers 740 thru 742 of 2791 call these bearings to be paid for under Bid Item 565.1925 TYPE E>.L. BEARINGS (OVER 225 KIPS) . Please clarify	See revised WS600 series drawings and bearing tables on revised drawings WS740, WS741, and WS742. Refer to Addendum 5, Article 3.
5	57	The Steel Laminated Bearing Tables on sheets 740 thru 742 of 2791 indicates that all of the bearings are to be paid under Bid Item 565.1925 Type E.L. Bearings (over 225 Kips) but none of the bearings on the table have a capacity greater than 194 Kips with most of them less than 100 kips and some less than 55 kips which should fall into the Bid Item 565.1921 Type E.L. Bearing (0 to 55K). There seems to be missing a bid item range of capacities within the bid item list and the current bearings listed on this table should be re-classified into new bid items. Please clarify	Drawings WS740, WS741, and WS742, with bearing tables, have been revised. Refer to Addendum 5, Article 3.
5	58	Please provide electronic drawing files to aid in takeoff. If electronic files of the proposed data is unavailable, please consider supplying the digital files of the existing conditions and topography of the project site.	CAD Files will not be provided.

Addendum	Addendum Question No.	Bidder's Question	Response
5	59	REDACTED	
5	60	The profile for the 36" DIP Class 56 installed in 48" steel sleeve on piles sewer states that we are to replace 92'1" of 36x24 Combination sewer but only shows 39' to be replaced. Please clarify and provide pay item.	Drawing BD206 has been revised with a profile that shows 38'-8" of 36" DIP Class 56 to be replaced. Refer to Addendum 5, Article 3.
5	61	On sheets 879A, 880, 880A, 881, 902 thru 904 and 941 thru 944 of 2791 addresses the Bid Item 563.03 Prestressed Hollow Slab Units for the esplanade deck. This bid item is assigned to two different precast hollow slab thicknesses, 15" and 21" Slabs. Should there not be two (2) separate bid items for these two types of precast elements. Please clarify.	Bid as shown, Item 563.03 covers both slab thicknesses.
5	62	Please provide a pay item for the 24" Polyeltheline Corregated Pipe shown in Reach H,I, and J Drawings and on teh park utilities drainage summary	Item number PK-78 as shown on drawings including PUD001 and PUD002 in the Pipe Schedule.
5	63	MTA General notes; Sheet 541; Note 1: Who will be responsible for the cost of any personnel the MTA deems necessary for work associated with this contract?	MTA will bill either DDC or the appropriate utility company directly for any and all MTA force account efforts.
5	64	Please provide as-built drawings for existing sign structures	NYSDOT as-builts are included in the Appendix A materials. Refer to Addendum 3, Article 3.

Addendum	Addendum Question No.	Bidder's Question	Response
5	65	Within the SP pages noted there are two (2) OCMC Work Permits noted as "HCP- Draft", the older draft titled: "Pedestrian Bridge Replacement Project; FDR Drive between Exits 2 and 7; Six (6) 10-hour closures" and dated April 2, 2020 indicates in stipulation 2 that the FDR may be closed in either or both directions from 12:00A to 10:00A Sunday mornings 3-6 times over a 12-18mo period. The more recent draft titled more generally: "East Side Coastal Resiliency, SANDRESM1; From Montgomery Street to East 15th Street" and dated April 21, 2020 indicates in stipulation 2e that the FDR may be closed 3 times in each direction for either 4 or 5 hours as noted: 1:00AM to 5:00AM, Tuesday morning to Friday morning; 2:00AM to 7:00AM, Saturday morning; or 2:00AM to 7:00AM, Sunday morning. Please clarify if the intent was to supercede the April 2 FDR full closure stipulations with the more broad April 21 draft permit.	Both stipulations apply. The 6 10-hour closures are intended for the installation of the three (3) permanent pedestrian bridges as noted in the title. The 4 or 5 hour closures are intended for other work impacting the FDR Drive that may require full closures.

	Revised Pre-Bid Question Responses				
	Refer to			Change	
#	Original Addendum	Addendum Question No.	Bidder's Question	Discard Original Response	Incorporate Revised Response
1	4	8	Volume 3 of 3; Highway special provisions; B.15 Us Army Corps of Engineers Requirements; Paragraph D; Please provide a list of ESA-listed species that will affect pile driving operations, along with date restrictions.	~~*Winter Flounder: Avoid installing cofferdams between January 15 and May 31. Migrating anadromous fishes (shad and herring): Avoid pile driving, sheetpile installation, and other in-water construction activities occurring outside of the cofferdams from March 1 to June 30.*~~	*Winter Flounder: Avoid installing cofferdams between January 15 and May 31.*

Addendum	Addendum Question No.	Bidder's Question	Response
7	1	FDR Drive crossing gate section c states micro piles. Where can we find these micro piles and what pay item are they associated with?	There are no micropiles at this location. Drawing FG245 has been revised with an updated Section C. Refer to Addendum 7, Article 2.
7	2	Bid Schedule item no. 51.31D00200V, 51.31S00242R, 51.31S00254R, 51.31DS00254R and 51.71M0M000 appear on the drawings but not on the bid schedule list. Please clarify.	Drawing DS300 has been revised to remove reference to item 51.71M0M000, refer to Addendum 7, Article 2. Items 51.31D00200V, 51.31S00242R, 51.31S00254R, 51.31DS00254R have been added to the bid schedule. Refer to Addendum 6, Article 2 for the current bid schedule.
7	3	The proposed Sea Rail Item No PK-ESCR 031A shown on sheets 873 thru 902 does not exist in the Bid Schedule form. Please clarify	Drawings WS600 to WS631 have been revised to include item PK-ESCR 031. Refer to Addendum 7, Article 2.
7	4	Can you please provide the locations that might contain asbestos or PCB's where the gas facilities coated with coal tar wrap?	EP-7 item UTL-6.03.1A (CE), Removal of Abandoned Gas Facilities with Possible Coal Tar Wrap, is paid per linear foot. The bidder must review the gas plates in the contract drawings and use their engineering judgement. Coal tar wrap is found on certain steel pipes.
7	5	Sheet Number 727 (WS301) of 2791 indicates that the cut-off wall Tip Elevation is to be at EL -55.0 at Section D-1 shown on Sheet 875 (WS602) of 2791 shows the Cut-off wall Combi-Pile at El-55.0 and the bottom of the intermediate pile to be at EL-32.0 yet on the cut-off Wall Profile on Sheet 796 shows both the Combi-Pile wall and the intermediate piles to be at EL-55.0. Please clarify	Drawing WS402 has been revised. Drawings WS301 and WS602 are correct. Refer to Addendum 7, Article 2.
7	6	On Sheet number 232 of 2791 the conc rete deck slab in Section A is called out to be paid for under Bid Item 557.0109 which is Superstructure Slab with Integral Wearing Surface - Bottom Formwork Required - Type 9 Friction. Underneath this slab it has a geosynthetic membrane and select fill material and will be placed on grade and no bottom formwork is required. Please clarify that this is the appropriate bid item for this section of concrete.	Item 557.0109 is correct; bottom formwork is required to avoid surcharging the geo foam and underlying soils.

Addendum	Addendum Question No.	Bidder's Question	Response
7	7	On Sheet numbers 232 of 2791 Note: 1 indicates that the deck reinforcement cost to be included under Item 557.0109 and Note 2 indicates that the reinforcement is to be paid separately under Items 556.0202. We would request that the reinforcement be paid under Item 556.0202. Please clarify	The item number is correct and the basis of payment will not be adjusted.
7	8	Section D-2A on sheet 904 of 2791 (Dwg WS631) refers to Bid Item No ESCR-551-30.01 RS Proposed 24" Diameter , 10-0" Deep Rock Socket and the rock socket detail is on Sheet 1004 of 2791 (WS852). Please clarify or add bid item with the appropriate quantity and specification.	The work for the 24" diameter rock socket for the 30" pipe piles shall be paid under ESCR-551.30.01 RS. All work included to install each rock socket shown on WS852 shall be paid under ESCR-551.30.01 RS.
7	9	Section D-7 on sheet 881 of 2791 (WS608) indicated that the Intermediate Sheet Pile Tip Elevation is to be at EL-32, however on Sheets 8901 and 802 of 2791 (WS407 & WS408) from Sta 21+29.19 to Sta 22+50.08 it shows that the Intermediate Sheet Pule Elevation is to be EL -20. Please clarify	Drawing WS608 has been revised. Drawings WS407 and WS408 are correct. Refer to Addendum 7, Article 2.
7	10	Please add a pay item for PK-78 POLYETHYLENE CORRUGATED PIPE (24")	Item PK-78 has been added. Refer to Addendum 6, Article 2 for the current bid schedule.
7	11	Please correct pay item PK-ESCR 188P to read POLYETHYLENE CORRUGATED PIPE (12") AS SHOWN ON THE PIPE SCHEDULES	Confirmed that drawing, specifications and bid schedule read the same.
7	12	Please provide a pay item for the 4" Ductile Iron Sewer Pipe shown in Reach D and J	Items PK-687A and PK-687B have been added to the bid schedule and specifications. Refer to Addendum 6, Article 2.
7	13	ON sheet 880A (WS607A) The cross section refers to it as Section D-7, should this not be labeled Section D-6A as referenced from the structural plan view drawing 727 of 2791 (WS301). Please clarify	Drawing WS607A has been revised. Refer to Addendum 7, Article 2.
7	14	Please provide a pay item for the 6" Ductile Iron Sewer Pipe shown in Reach D and F	Items PK-687A and PK-687B have been added to the bid schedule and specifications. Refer to Addendum 6, Article 2.

Addendum	Addendum Question No.	Bidder's Question	Response
7	15	The plan view on sheet 729 0f 2791 (WS303) refers to Cross Section F-2 on Sheet 886 of 2791 (WS613) that shows the Intermediate Sheet Pile Tip to be at El-32, however on Sheet 811 and 812 of 2791 (WS417 & WS418) the Elevation views from Sta 35+77.56 to Sta 37+83.90 shows that the cut-off wall elevation is to be the same as the Combi-Wall to be at EL -43. Please clarify	Drawings WS613, WS417, and WS418 have been revised. Refer to Addendum 7, Article 2.
7	16	The partial Framing Plans on sheet numbers 855 thru 862 of 2791 (Dwgs WS520-527) show different span lengths than the Elevation Views on Sheets 836 thru 847 of 2791 (WS450 thru WS461). Please clarify	Drawings WS450 through WS461 have been revised. Refer to Addendum 7, Article 2.
7	17	Please add a pay item for the 12" RCP item 50.21C4012D	Item has been added. Refer to Addendum 6, Article 2 for the current bid schedule.
7	18	Please add a pay item for the MH-D09 AND MH-D10 ITEM # 51.31S00242R	Item has been added. Refer to Addendum 6, Article 2 for the current bid schedule.
7	19	Please add a pay item for the MH-H02 AND H-10 ITEM # 51.31S00254R	Item has been added. Refer to Addendum 6, Article 2 for the current bid schedule.
7	20	Please add a pay item for the MH-H01 50.11V000 Connection Manhole	Drawing DS307 has been revised with the item number changed to 51.11V000. Refer to Addendum 7, Article 2.
7	21	Please add a pay item for the MH-H04 AND H-05 ITEM # 51.21D0B2030R	Drawing DS307 has been revised with the item number changed to 51.21S0A2024R and item 51.2150B2030R is no longer referenced. Refer to Addendum 7, Article 2.
7	22	Please add a pay item for MH I-04 ITEM # 51.2150B2030R	Drawing DS308 has been revised and item 51.2150B2030R is no longer referenced. Refer to Addendum 7, Article 2.
7	23	Using the latest Drawings from Addenda #2 Cross Section G-1 on Sheet 890 of 2791 (WS617) shows the Intermediate Sheet Pile Tip to be at El-32, however on Sheet 817 of 2791 (WS423) the Elevation views from Sta 44+66.42 to Sta 45+03.34 shows that Intermediate Sheet Pile tip extends to the bottom of the Combi-Wall to El -50. Please clarify	Drawings WS423 and WS617 have been revised. Refer to Addendum 7, Article 2.
7	24	Using the latest Drawings from Addenda #2 Cross Section G-2 on Sheet 891 of 2791 (WS618) shows the Intermediate Sheet Pile Tip to be at El-30, however on Sheet 817 thru 819 of 2791 (WS423-WS425) the Elevation views from Sta 45+03.34 to Sta 47+14.59 shows that Intermediate Sheet Pile tip extends to the bottom of the Combi-Wall to El -50. Please clarify	Drawings WS423 through WS425 have been revised. Refer to Addendum 7, Article 2.

Addendum	Addendum Question No.	Bidder's Question	Response
7	25	Using the latest Drawings from Addenda #2 Cross Section G-4 on Sheet 893 of 2791 (WS620) shows the Intermediate Sheet Pile Tip to be at El-30, however on Sheet 819 thru 819 of 2791 (WS425) the Elevation views from Sta 47+14.59 to Sta 47+55.20 shows that Intermediate Sheet Pile tip extends to the bottom of the Combi-Wall to El -62. Please clarify	Drawing WS425 has been revised. Drawing WS620 is correct. Refer to Addendum 7, Article 2.
7	26	Please clarify the region of bid item 6.01 AC	The bid schedule and drawings F100, F101, and F110 have been revised to more accurately reflect the regions and quantities of clearing & grubbing required for installation of the floodwall. Refer to Addendum 7, Article 2 for the revised drawings and Addendum 6, Article 2 for the current bid schedule.
7	27	Please add a pay item for 50.22CS080050 as shown in note 7	Drawing Notes have been revised on drawings DS800 through DS823. Refer to Addendum 5, Article 3.
7	28	Referring to Drawing FG – 163, Pier 42 Swing Gate Fabrication section and detail. a. Section C suggests Sill Plate detail and embedded steel work below Top of Sill level are too be coordinated with civil drawing. We went through Civil Drawings, there is no relevant details pertaining to this portion of work. Please provide exact drawing number you are referring too.	Drawing FG163 has been revised with an added reference. Refer to Addendum 7, Article 2.
7	29	Referring to Drawing FG – 163, Pier 42 Swing Gate Fabrication section and detail. b. Section C, shows top and bottom girders are W24X84 & middle girder is W24x146. However, Detail 1, 2 & 3 on same drawing shows different girder sizes of W27x161 & W27x102. Please clarify, which girder section are correct?	Drawing FG163 has been revised. Refer to Addendum 7, Article 2.
7	30	The original set of plans along with the Addenda #2 drawings the Plan View on Sheet 730 of 2791 (WS304) and the Elevation View on Sheet 819 of 2791 (WS425) shows the Cut-off wall Sheet Pile Tip to be at El-44, however on Sheet 893 of 2791 (WS4620) Cross Section G-4 shows the Tip Elevation for the Cut-off Wall to be at EL-62. Please clarify	WS620 Section G-4 refers only to the pile supported platform.
7	31	The Original set of plans and the Addenda #2 drawings show Cross Section G-4 on Sheet 893 of 2791 (WS620) shows the Intermediate Sheet Pile Tip to be at El-30, however on Sheet 819 of 2791 (WS425) the Elevation views shows that Intermediate Sheet Pile tip extends to the bottom of the Combi-Wall to El -44. Please clarify	Drawing WS425 has been revised. Drawing WS620 is correct. Refer to Addendum 7, Article 2.

Addendum	Addendum Question No.	Bidder's Question	Response
7	32	The Original set of plans and the Addenda #2 drawings show Cross Section G-5 on Sheet 894 of 2791 (WS621) shows the Intermediate Sheet Pile Tip to be at El-30, however on Sheet 821 of 2791 (WS427) , from Sta 49+43.88 to Sta 49+93.60 the Elevation views shows that Intermediate Sheet Pile tip is to be at El -18. Please clarify	Drawings WS427 and WS62 have been revised. Refer to Addendum 7, Article 2.
7	33	The Original set of plans and the Addenda #2 drawings show Cross Section G-6 on Sheet 893 of 2791 (WS622) shows the Cut-off Wall Tip elevation to be at El-52, however on Sheet 730 of 2791 (WS304) the Plan View and on Sheet 821 of 2791 (WS427) the Elevation View shows the Cut-off Wall Tip Elevation to be at El-46. Please clarify	Drawings WS304, WS427, and WS622 have been revised. Refer to Addendum 7, Article 2.
7	34	The Original set of plans and the Addenda #2 drawings show Cross Section G-6 on Sheet 895 of 2791 (WS622) shows the Intermediate Sheet Pile Wall Tip elevation to be at El-30, however on Sheets 821 & 822 of 2791 (WS427 & WS 428) from Sta 49+93.60 to Sta 52+75.90 show the Intermediate Sheet Piles is extended to the bottom of the Combi-Wall to EL -46. Please clarify	Drawings WS427, WS428, and WS622 have been revised. Refer to Addendum 7, Article 2.
7	35	The Original set of plans and the Addenda #2 drawings show Cross Section G-6 on Sheet 895 of 2791 (WS622) and the Plan View on Sheet 731 of 2791 (WS305) both show the Cut-off Wall Tip elevation to be at El-52 and, however on the extended Plan View on Sheet 730 of 2791 (WS304) shows the Cut-off Wall Tip Elevation to be at EL-46.0. Please clarify	Drawings WS304, WS305, and WS622 have been revised. Refer to Addendum 7, Article 2.
7	36	The Original set of plans and the Addenda #2 drawings show Cross Section H-1 on Sheet 896 of 2791 (WS623) shows the Intermediate Sheet Pile Wall Tip elevation to be at El-30, however on Sheets 824 thru 826 (WS430 thru WS 432) from Sta 53+44.91 to Sta 57+80.33 show the Intermediate Sheet Piles tip elevation to be at EL-25. Please clarify	Drawings WS430, WS431, WS432, and WS623 have been revised. Refer to Addendum 7, Article 2.
7	37	What bid item will the concrete parapets seen in Section A (Typical Deck) on sheet 117 (BC107) and also in Section A on Sheet 150 (BC140) that the Handrail/Guardrail and Light Standards rest upon for the Main Arch Spans of each Pedestrian Bridge get paid under as there is no mention as to where this concrete is to be paid under (Referring to Corlears Hook Bridge Drawings only as we would assume your response will also be for the Delancey Street and East 10th Street Pedestrian Bridges as well). Is there a separate railing item similar to the approaches or is this to be paid for under Bid item 557.0109 Concrete Deck. Please Clarify.	Drawings BC107 and BC140 have been revised. Refer to Addendum 7, Article 2.

Addendum	Addendum Question No.	Bidder's Question	Response
7	38	The steel H-Pile anchorages detail on Sheet 133 of 2791 (BC123) for the Corlears Bridge does not state whether or not these anchorages are to be epoxy coated or black as the other two bridges call for these bars to be epoxy coated. Also these bar are embedded into a 2'-0" thick footings for the wingwalls and the west abutment but this detail only addresses what the bar lengths would be for a 3 ft Thick footing or a 4 ft Thick footing. Please clarify	There is no two-foot thick pile foundation at Corlears Hook Bridge. Drawing BC123 has been revised. Refer to Addendum 5, Article 3.
7	39	Section A on sheet no 117 of 2791 (BC107) it indicates that the Arch Rib (Typ) is to be paid for under Bid Item 564.0502 - Structural Steel - Type 2 (Curved Steel) but same arch rib members on the Delancey Street (Sheet no 282 of 2791 (BD155) and East 10th Street Bridges (Sheet 394 of 2791 (BT144) are shown to be paid under Bid Item 564.0501 - Structural Steel Type 1 (Straight Steel). Please clarify	Drawings BC107, BD155, and BT144, have been revised. Refer to Addendum 5, Article 3 and Addendum 7, Article 2.
7	40	On sheets 913 thru 940 (WS660 thru WS667) and sheets 936 thru 940 (WS709 thru WS713) shows that the #8 Anchor Rod and #10 Diaphragm Rods that are to be drilled and epoxy anchored into the cap along with the Expansion/Fixed And Material to be paid as part of Bid Item 565.1821 Elastomeric Bearings E.P and Bid Item 565.1925 Elastomeric Bearings E.L. (Over 225K). We would like to request that a separate bid item be setup to address these materials.	The work for the anchor rods to be drilled and epoxy anchored into the cap falls under item number 586.0201, as shown on WS660-WS667. This is a separate bid item from the bearings, which includes the anchor rods themselves but not the installation. For the diaphragm rods, the material and epoxy are included in pay item 565.1821 and a separate item number is provided for the drilling as 586.0201. These are in accordance to NYSDOT Standard Specifications Section 565.
7	41	The Original set of plans and the Addenda #2 drawings show Cross Section H-2 on Sheet 897 of 2791 (WS624) shows the Intermediate Sheet Pile Wall Tip elevation to be at El-30, however on Sheets 826 thru 830 (WS432 thru WS 436) the elevation view shows the Intermediate Sheet Pile Wall extending to the bottom of the Combi Wall to El-50. Please clarify	Drawings WS432 through WS436 are correct. Drawing WS624 has been revised. Refer to Addendum 7, Article 2.
7	42	Sheet 557; Predrilling of existing timber wall state 11'-3". Stationing state its approx. 120 linear feet. Please clarify	Drawing F104 has been revised. Refer to Addendum 7, Article 2.
7	43	Sheet 558; Existing timber crib bulkhead to be removed, see drawing WS161 for details. Sheet WS161 is for predrilling through existing timber bulkhead. Please clarify. Additionally clarify what pay item is associated with partial removal of timber bulkhead for pile installation	Drawings WS161 and F104 have been revised with timber crib demolition item number. Refer to Addendum 7, Article 2.
7	44	Sheet 584; Sta 17+00 - 18+25 and Sta 20+00 - 21+25; Reference along with sheet 595. Is it the intent to install a double sheeting wall at these locations?	Details can be found on drawings WS850 through WS857A.

Addendum	Addendum Question No.	Bidder's Question	Response
7	45	The jet grout zones as identified in the plans and profiles do not match in Drawings F400 through F410. Please revise to show a consistent set of plans in order to determine how much jet grouting should be incorporated into the flood wall.	Please refer to the utility crossing drawings F700 series (F710 & F711 for schedule) for dimensions of the jet grout zones around utilities. For the flood gates, see revised drawings F400 to F410 that include reference to FG drawing which contains details of the gate monoliths and jet grout zones. Drawings F400-F410 have been revised. F4100-F410 show the jet grout zone overlap and the profiles show only the jet grout in between the sheet pile openings. Refer to Addendum 7, Article 2.
7	46	Drawings F400 through F410 do not identify the bid items for the jet grouting at each section. Please revise drawings to show which jet grout sections correspond to which bid items.	Drawings F400 through F410 have been revised. Refer to Addendum 7, Article 2.
7	47	For the jet grout bid items (0401 through 0406), how is the cubic-yardage calculated? Is it based on a 3'-0", 4'-0", or 7'-0" wall thickness? Is it based on the centerline-centerline of the outside columns, or the edge-edge of the outside columns? Is it based on the total height of jet grout (i.e. bottom of treatment zone to top of treatment zone)? Is it based on the length of jet grout between the sheet piles (as identified in drawings F400 through F410), or the total length of jet grout including overlap with the sheet piles for each utility (as identified in drawings F700 through F705)? The contract drawings are not clear, and it is not possible to determine how the jet grout bid item quantities were calculated.	The jet grout bid item quantities are calculated by CY based on the individual jet grout column volume (diameter and height), excluding volume of overlap between adjacent columns, and number of jet grout columns needed per location.
7	48	The jet grout bid items ESCR-2.AO, ESCR-2.FDO, and ESCR-2.GCO (0402, 0404, and 0406) are not identified anywhere in the contract drawings. How were the bid item quantities calculated? How is it determined where these bid items are to be applied versus their counterparts, ESCR-2.A, ESCR-2.FD, and ESCR-2.GC (0401, 0403, and 0405)?	Refer to drawings F700-F707, which include jet grout bid items as callouts and in the notes, where applicable. ESCR-2.FDO shall include all work involved in the installation of jet grout columns with obstructions. ESCR-2.AO shall include all work involved in the installation of angled jet grout columns with obstructions. ESCR-2.GCO can be seen on FG100, FG150, & FG200. Drawings F700, F701, F702, F703, F705, FG100, FG150, and FG200 have been revised with allowance noted. Refer to Addendum 7, Article 2.

Addendum	Addendum Question No.	Bidder's Question	Response
7	49	Specification Section ESCR-2 – Jet Grouting, Part 2.13 (D) identifies that the hydraulic conductivity of the jet grout shall be 1x10^-6 cm/sec; however, Contract drawing F002 Jet Grouting note 4 identifies a minimum hydraulic conductivity of 1x10-7 cm/s. As a design permeability of 1x10^-7 cm/sec is beyond the capabilities of jet grouting, please revise the drawings to identify a design hydraulic conductivity of 1x10^-6 cm/sec.	1x10^-6 cm/sec is the correct value for the minimum hydraulic conductivity. Drawing F002 was revised in Addendum 2, Article 2 with reference to the specification.
7	50	Specification Section ESCR-2 – Jet Grouting, Part 2.11 (G) identified "borehole deviation measurements on 5% of the columns." Part 2.13 (H) later identifies "vertical alignment profiles over the length of one soil-cement element per day." Are these contradictory specifications referring to the same measurement (i.e. down the hole), or are these two separate measurements? Please clarify which specification takes precedent or what the different measurements entail.	The requirement is that the vertical alignment profile for a soil-cement element is done on a daily basis. It was estimated to be about 5% of the columns, but this is approximate based on the daily check specified above. Therefore, the daily requirement takes precedence.
7	51	Drawing F-410 is indecipherable in regard to identifying the utility crossing identifications, as there are duplicates across the page. Please revise.	Drawing F410 has been revised to only show the correct utility crossing ID numbers. Refer to Addendum 7, Article 2.
7	52	Drawings F710 and F711 reference drawing "FXXX" for identifying the crossing types for certain utilities. This drawing does not exist. Please revise with accurate crossing types for all utilities.	Drawings F710 and F711 have been revised. Refer to Addendum 7, Article 2.
7	53	Drawing F710 refers to drawing FD103 for crossing K-11. This drawing does not exist. Please either include drawing FD103, or identify what drawing should be referenced if drawing FD103 does not exist.	Drawings F710 and F711 have been revised with corrected references. Refer to Addendum 7, Article 2.
7	54	Drawing F711 refers to drawing FG301 for crossing K-11. This drawing does not exist. Please either include drawing FG301, or identify what drawing should be referenced if drawing FG301 does not exist.	Drawing F711 has been revised to include the correct cross reference. Refer to Addendum 7, Article 2.
7	55	Drawings F710 and F711 refer to crossing type G. Drawing F706 is supposed to detail crossing type G, but the page is blank. Please either include the detail for crossing type G, or identify what crossing type should be referenced if crossing type G does not exist.	All "Type G" references should be "Type E". Drawings F710 and F711 have been revised. Refer to Addendum 7, Article 2.
7	56	Drawings F400 through F410 do not show all of the proposed jet grout zones in the profiles that will be required as per the utility crossing schedules in F710 and F711. Please revise drawings to identify all proposed jet grout zones.	Please refer to the utility crossing drawings in the F700s (F710 & F711 for schedule) for dimensions of the jet grout zones around utilities. Refer to Addendum 7, Article 2.

Addendum	Addendum Question No.	Bidder's Question	Response
7	57	The jet grout zones on drawings F410, F022, and FG271 do not match (e.g. lengths, depths). Please clarify which drawing takes precedent and revise drawings as necessary.	The jet grout depths on all 3 drawings match at -34.0'. The jet grout zone can be found on the partial plan on F885. A cross-reference note has been added to revised drawing F410, Refer to Addendum 7, Article 2.
7	58	The utility crossings as identified on drawings F710 and F711 reference crossing types that require jet grouting, but many are not identified in drawings F400 through F410 as requiring jet grout. Please revise drawings F400 through F410 to identify all locations where jet grouting is required.	The locations where jet grouting is required are shown on the profiles on revised drawings F400 to F402, F409 and F410. Refer to Addendum 7, Article 2.
7	59	Drawing FG271 identifies jet grouting beneath the East 14th Street crossing, but the details are lacking. Is there to be a continuous six (6) feet thick wall on either side of the foundation, or a six (6) feet diameter treatment zone around each pipe pile? What are the depths of the jet grouting in the center of the foundation? Is there no jet grouting beneath the existing double barrel sewer, or is there continuous treatment beneath the foundation as depicted in drawing F885?	The 6 foot thick wall on either side of the foundation is correct. See revised drawing FG272 with limits of the jet grout. Depth of jet grout in the center of the foundation has been added to revised drawing FG271. Refer to Addendum 7, Article 2. There is no jet grouting beneath this existing sewer; F885 is not related to the East 14th Street gate crossing.
7	60	Drawing FG271, Note 2 identifies “jet grouting shall be performed with the triple fluid system.” This contradicts Specification ESCR-2 – Jet Grouting, which allows the contractor to select the jet grouting system. Please revise drawing to eliminate Note 2.	Drawing FG271 has been revised. Refer to Addendum 7, Article 2.
7	61	For the jet grouting identified in drawings F850 and F855, what bid item does the jet grouting fall under?	Drawings F850 and F855 have been revised. Refer to Addendum 7, Article 2.
7	62	For the jet grouting identified in drawings F880, what bid item does the jet grouting fall under?	Drawing F880 has been revised. Refer to Addendum 7, Article 2.
7	63	Sheet 597; Cutoff Floodwall ESCR-551.36.05.C at Sta 47+54. Please provide this pay item in the Bid Schedule	Item has been added. Refer to Addendum 6, Article 2 for the current bid schedule.
7	64	Sheet 583; Reference Sheet 594; How much of the AZ46 steel sheeting has low overhead issues?	Drawing F400 has been revised to show the limits of AZ46 sheeting with low overhead issues. Refer to Addendum 7, Article 2.
7	65	Sheet 592; Starting at station 90+00, is it the intent to for the layout to increase by 500 additional feet. Station limits 91, 92, 93, and 94 are not shown.	Drawing F409 has been revised with stationing conversion. Refer to Addendum 7, Article 2.

Addendum	Addendum Question No.	Bidder's Question	Response
8	1	Sheet 598; Cross Section J1 shows ESCR-552.11 46CT, but there is no Station 91+22 located on the drawings. What section does this detail apply?	Drawing F610 has been revised with corrected stationing. Refer to Addendum 7, Article 2.
8	2	Sheet 614; Section 5 Typical Shear Stud Detail. Does this detail apply to all AZ46 Steel Sheeting?	No, the shear stud detail on AZ46 sheeting is also typical as shown on drawings F704, F851, and F856.
8	3	Historic Bulkhead removal; Is removal of the historic bulkhead, pre-drilling, and partial removals paid under item ESCR 6.27 TC? There is a conflict with the sheeting, combo wall and pipe pile specifications, in which the contractor is required to remove any interferences under the pile items. Please confirm.	ESCR-6.27 TC only includes removal of the timber cribbing for tie rod and deadman installation. Refer to drawing WS162 for details. The pre-drilling is paid under the pre-drilling pile item numbers.
8	4	What pay item is associated with removing existing H-Piles along Esplanade structure, as shown on sheets 678-698	The removal of the H-piles along the esplanade are included in the demolition pay items by type shown on revised drawings WS140 to WS149, Addendum 7, Article 2.
8	5	What pay item is associated with cutting existing timber piles along Esplanade structure, as shown on sheets 678-698.	Pulling the timber piles for the cutoff wall is paid under ESCR-6.27 TP. Cutting the timber piles for the cutoff wall is paid under the esplanade type demo numbers shown in drawings WS140 through WS149.
8	6	What pay item is associated with pre-drilling after removal of timber pile locations along Esplanade structure, as shown on sheets 678-698	The pre-drilling is included in the pay item for the installation of each associated pile.
8	7	Please clarify the pay limit for each bid item (type ESCR-552.11 20, ESCR-552.11 20 C, ESCR-552.11 20 CT and ESCR-552.11 20CT) as shown on sheets 572 - 598 and sheets 726-1000. A schedule table for each type shown on sheet 597 is preferred	New drawing WS441A, with a cut-off wall schedule and pay items, has been added. Refer to Addendum 7, Article 2.
8	8	Please clarify the pay limit for each bid item (type ESCR-552.11 4219C, ESCR-552.11 4219 CD, ESCR-552.11 4219 CI and ESCR-552.11 4219 DI) as shown on sheets 726-1000. A schedule table for each type shown on sheet 597 is preferred	New drawing WS441A, with a cut-off wall schedule and pay items, has been added. Refer to Addendum 7, Article 2.
8	9	Contract drawings FM700 (SHT 1049) to FM713 (SHT 1061) refer to 'Item No. ESCR-522.11 46-700N. CPI' this pay item is not part of the bid breakdown please provide.	The correct item is ESCR-552.11 46CP. Callouts have been revised as necessary on drawings FM700 through FM713. Refer to Addendum 7, Article 2.
8	10	Please clarify where item ESCR-552.11 38 CW is to be used.	Item has been removed. Refer to Addendum 6, Article 2 for the current bid schedule.
8	11	Please clarify where item ESCR-552.11 4238C and ESCR-552.11 4238RS is to be used.	Item has been removed. Refer to Addendum 6, Article 2 for the current bid schedule.

Addendum	Addendum Question No.	Bidder's Question	Response
8	12	Please provide bar list table associated with floodwall cap, cut-off wall(cap and plug), esplanade structures (pile cap, pier, deck, etc.), pile supported platform, and I-Wall from sheet 533 to 1066	All rebar is called out on the drawings and provides sufficient information for bidding and fabrication.
8	13	Waterfront Esplanade Demolition Plans are blank. Please provide the sheet 704 to sheet 707.	WS136 to WS139 are intentionally left blank.
8	14	Drawing F300 to F310 and Drawing F850 to F887 compare to Drawing FM300 to FM717, which one governs the details for I-Wall, please advise.	Drawings F850 to F887 are special structures and their details are shown within this range of drawings. Drawings F300 to F310 are structural general plans that includes I-Walls and other structures as well. The I-Wall details are on drawings FM300 to FM717.
8	15	What pay item is associated with bent plate used for I-Wall Monolith sheeting connection , as shown on sheets FM709 to FM713	Drawing FM709 has been revised. Refer to Addendum 7, Article 2. Bent plate has been deleted. The I-Wall to FDR Gate structure has a bent plate that is paid under structural steel ESCR-564.CT. All miscellaneous structural steel is to be paid under this item as per specification.
8	16	Sheet BT123, pile data table indicated 2 type of steel pile, notes stated all pile installation and material requirements shall conform to NYSDOT Std Spec 551.012084, please clarify how many pile types to be used in this structure	Drawing BT123 is the west ramp wall reinforcement plan. Drawing BT133 has the Pile Data Table and it shows that all piles are HP 12 X 84.
8	17	Reference: Delancey Street Bridge, Drawing BD105, Sheet 232, Cross Section A/BD104. Please provide the width of EPS (Geofoam Block), Item No. 203.03950017 Extruded Polystyrene Fill and Select Granular Fill, Item No. 203.07 to fill space between EPS and new West Ramp concrete walls, since it is not clearly shown on above referenced cross section?	Drawing BD105 has been revised to clarify that there shall be a 3 inch gap (to be filled with granular fill as noted already). Refer to Addendum 7, Article 2.
8	18	Reference: Delancey Street Bridge, Drawing BD117, Sheet 244, Footing Pile Plan and Drawing BD168, Sheet 295, Staircase Plan and Elevation. Please confirm that payment for 4” Foam Material NYSDOT Stand. Spec. 705-08 shown on above referenced drawing, will be made under Item No. 555.08 Footing Concrete, Class HP?	Drawing BD117 has been revised. Refer to Addendum 7, Article 2.
8	19	Reference: Delancey Street Bridge, Drawing BD102 & 122, Sheet 232 & 249, Cross Section B/BD104 & Typical Section Spans 1 and 2. Please clarify under what bid item(s) costs for construction of 6” curb on top of 1’-6” thick reinforced concrete slab and curb reinforcement should be included?	As noted on BD105, the concrete curb / parapet shall be paid for under item 569.03. As per the specification, the cost for reinforcement is included under item 569.03.

Addendum	Addendum Question No.	Bidder's Question	Response
8	20	Reference: Delancey Street Bridge, Drawing BD137 & 134, Sheet 264 & 261. Please confirm that payment for construction of curb/parapet on top of wingwalls, will be made under Items No. 555.09 and 556.0202.	The concrete curb / parapet shall be paid for under Item 569.03. As per the specification, the cost for reinforcement is included under Item 569.03. Drawing BD134 has been revised. Refer to Addendum 7, Article 2.
8	21	Reference: Corlears Hook Park, Drawing BC120 & 140, Sheet 130 & 150, Cross Section B/BC140. Shear studs are not shown on End Floor Beams but note on Shear Stud Connector Detail reads: “Top flange for box shape end floor beam shear stud similar”. Please confirm that two (2) rows of shear studs are required on each End Floor Beam	Yes, the shear studs configuration for end floor beams and interior floor beams are similar.
8	22	Reference: Delancey Street Bridge, Drawing BD137 & 134, Sheet 264 & 261. Please clarify if payment for construction of East Ramp Deck, will be made under Items No. 557.0109 and please clarify if deck reinforcement cost to be included under the same item?	Correct. Deck and reinforcement shall be paid for under item 557.0109. Drawing BD 134 has been revised. Refer to Addendum 7, Article 2.
8	23	Drawings WS755 thru WS757 all reference sections on WS766, but WS766 is labeled as intentionally blank. Please clarify.	Drawing WS766 has been revised. Refer to Addendum 7, Article 2.
8	24	Please refer to SHT 1522, “Drainage Mini-Pile Table” there appears to be two structures missing from the table STR-302 and STR-303 which are shown to receive Mini-piles on SHT 1517.	Drawing PUD705 has been revised. Refer to Addendum 7, Article 2.
8	25	Please refer to SHTS 1517-1520 there is not details information provided for structures STR-601 and STR-602 which are listed in the “Drainage Mini-pile Table”. Please provide these details.	Refer to "Drainage/Sanitary Structure Pile Cap Detail" on drawing PUD705.
8	26	Under notes table on sheet 1486 and 1487, Structure Type C-5B is not listed for specified structure: STR-7002. Please provide Structure Type with details.	Drawing PUD003 has been revised. Refer to Addendum 7, Article 2.
8	27	Under pipe schedule notes on sheet 1484 and 1485, Item numbers for Ductile Iron Sewer Pipe – 4” D.I.A, Ductile Iron Sewer Pipe – 6” D.I.A, Polyethylene Corrugated Pipe (4”), and Polyethylene Corrugated Pipe (6”) are not provided. Please provide Item numbers for these pipes.	Items PK-687A, PK-687B and PK-ESCR 188A have been added to the specifications and bid schedule. Refer to Addendum 6, Article 2. Drawings PUD001 and PUD002 have been revised. Refer to Addendum 7, Article 2.
8	28	Please refer to SHTS 1176, 1177, 1185, 1186, 1187, 1188, 1196, 1197 mention is made for Pay item 6.36 DR but this item does not existing on the bid breakdown. Please remove these notes and/or provide the associated Pay item, Thank you.	Item 6.36 DR has been added. Refer to Addendum 6, Article 2.
8	29	Sheet 1004;Does the HP12x84 Pile Stinger as shown on the Rock Socket for all L-Wall foundations included in the pipe pile pay item?	The stinger is included in the rock socket pay item shown on drawing WS850 and the typical cross section for all other L Wall Platform Drawings.

Addendum	Addendum Question No.	Bidder's Question	Response
8	30	Sheet 1004; The HP12x84 stinger is shown to be 3' below from the proposed concrete plug. The concrete plugs are shown to be no more than 10' from cutoff. Is the pile stinger to be installed from the proposed plug or the dimensions as shown in details for typical pile rock sockets?	Drawings WS852, WS862, WS872, WS882, WS885C have been revised. Refer to Addendum 7, Article 2. The dimensions are now consistent showing the 10'.
8	31	The Original set of plans and the Addenda #2 drawings show Cross Section I-2 on Sheet 898 of 2791 (WS625) and the Plan View on Sheet 732 of 2791 (WS306) both show the Cut-off Wall Tip elevation to be at El-85 and, however on the Elevation View on Sheet 832 of 2791 (WS438) shows the Cut-off Wall Tip Elevation to be at EL-61.0. Please clarify	There are (2) L-Walls at this location and the tip elevation should be -85.0'. Drawing WS438 shows the correct extents where the tip elevation goes from -61' to -85' for the L-walls then back to -61'.
8	32	Typically manufactures requirements call for bedding for polyethylene corrugated pipe to extend to 1' above the top of pipe but the detail 5 is only calling out for bedding to be installed 6" below the bottom of pipe. Please confirm.	Please use the bedding depth as shown on Detail 5 on Sheet 3 of NYC Parks Standard Details.
8	33	Reference plan sh. 129. Pay item for abutment wall is 555.0200001. Please clarify. Will footing be paid with item 555.08?	Footing concrete will be paid under item 555.08
8	34	Please add missing pay item for T-3.18 so this work can be properly accounted for	T-3.18 is incorrect. Drawing F100 has been revised with correct items. Refer to Addendum 7, Article 2.
8	35	This sheet shows FENCE TO BE REMOVED AND REPLACED ITEM NO. 6.34 X and FENCE TO BE REMOVED ITEM NO. 6.34 X but the pay item for 6.34 X is REMOVE AND DISPOSE OF EXISTING CHAIN LINK FENCE. Please clarify.	Drawings F100 has been revised. Refer to Addendum 7, Article 2. The removal of the existing chainlink fence at Gouverneur Gardens (north side Montgomery Street) is to be accounted for under Item 6.01 AC Clearing and Grubbing. Costs for removal and disposal of the existing fence beneath the FDR Drive (Montgomery St Parking lot) to be accounted for under Item 6.34 X.
8	36	Please add missing pay item for NYCT-LP.SW so this work can be properly accounted for	Drawing F100 has been revised with reference to the item removed. Refer to Addendum 7, Article 2.
8	37	Please add missing pay item for ESCR-4.11 R so this work can be properly accounted for	The correct pay item is ESCR-4.11 RR. Drawing WS148 has been revised. Refer to Addendum 7, Article 2.
8	38	Sheets LL501 to LL560 reference the LAYOUT POINT SYMBOLS KEY but none are shown on the drawings. Please add and resend the drawings.	Drawings LL501 through LL560 were revised in Addendum 5, Article 3.

Addendum	Addendum Question No.	Bidder's Question	Response
8	39	Per NYCDOT Specifications, Bid Item 6.02 AAN UNCLASSIFIED EXCAVATION is payed for as the area "between the existing surface of the roadway, or area to be widened, and the finished subgrade of the pavement base." However, sheet F100 of the plans shows PAVEMENT TO BE REMOVED AND REPLACED AFTER REGRADING as ITEM NO. 6.02 AAN and sheet F120 shows ASPHALT PAVING AND CONCRETE SUB-BASE TO BE REMOVED as ITEM NO 6.03 AA. Please clarify where items 6.02 AAN, 6.03 AA, and 6.03 AA (S) are paid.	Drawing F120 has been revised with correct item numbers. References to drawing F120 have been added where appropriate in drawings F100, F101, F102, and F109. Refer to Addendum 7, Article 2.
8	40	Please provide sheet HW300.	There is no Highway Reconstruction work in Segment 1 Reach A. Sheet has been intentionally left blank.
8	41	Please provide sheet HW101.	There is no Highway Demolition work in Segment 1 Reach B. Sheet has been intentionally left blank.
8	42	In Volume 1 of 3, Special Experience Requirements, Page A-8, Other No. 9 states "PK-ESCR 928: Entity performing masonry work....". We find no Specification Section PK-ESCR 928 nor any bid items with that number. Please clarify.	The special experience requirements have been revised. Refer to Addendum 3, Article 1.
8	43	Drawing number DS309 shows 36” combined sewer (item 5121VC3E036D) however, this item is not exist on bid schedule.	Drawing DS309 has been revised with correct item number. Refer to Addendum 7, Article 2.
8	44	Please clarify what is included in outfall structure. It looks like all the outfall structure is included in proposed combined sewer structure and it is not clear that where the portion of outfall structure starts and which part is included in outfalls.	Drawings DS600 through DS609 and DS302 through DS308 have been revised. Refer to Addendum 7, Article 2.
8	45	Please provide Con Edison Dwg EO-9230-C as stated in section E "Price to Cover" for the JB-117?	Refer to Sketch 1 (Con Edison Drawing EO-9230-C), attached.
8	46	Please provide drawing BWS Standard Drawing No. 46464-Z as stated on JB-404?	Please refer to the NYCDEP Water Main Standard Drawings, as referenced in the Specifications and Standards of New York City sheet in Volume 3.
8	47	The table on Drawing number DS303 show that MH-D07 is STD PC 6’ DIA manhole. However, the profile on drawing number DS405 shows that the same pipe is type R manhole. Same for MH-E04 on drawing DS304. Please clarify.	Manhole types have been updated. Drawings DS405, DS413, DS414, DS418, DS419, DS421, DS422, and DS423 have been revised. Refer to Addendum 7, Article 2.
8	48	Please confirm that MH-E03 on drawing DS304 does not have H pile.	Drawing DS815 has been revised to add information about MH-E03. Refer to Addendum 7, Article 2.

Addendum	Addendum Question No.	Bidder's Question	Response
8	49	Section F states that the details will be provided during construction can the owner provide details for bidding purposes?	For bidding purposes, refer to Sketch 1 (Con Edison Drawing EO-9230-C), attached.
8	50	Sheet No 711 of 2791 (WS143) refers to Bid Item ESCR-6.27D Demolition Type D1: 3-Pile Esplanade with Conc Deadman (Typ) but this item is not mentioned in the specifications or in the Schedule of Bid Item Values in Volume 1 of 3. Please provide bid item in the schedule of values for this work.	Item ESCR-6.27 D has been added. Refer to Addendum 6, Article 2.
8	51	Sheet No 713 of 2791 (WS145) refers to Bid Item ESCR-6.27F Demolition Type F: Partial Demolition of Existing South Embayment North Abutment but this item is not mentioned in the specification or in the Schedule of Values in Volume 3 of 3. Please provide a bid item in the schedule of values for this work.	Item ESCR-6.27 F has been added. Refer to Addendum 6, Article 2.
8	52	The Original set of plans and the Addenda #2 drawings show Cross Section J-1 on Sheet 900 of 2791 (WS627) shows the Intermediate Sheet Pile Wall Tip elevation to be at El -50, however on Sheets 834 & 835 (WS440 & WS 441) the elevation view from Sta 69+24.00 to Sta 70+33.15 shows the Intermediate Sheet Pile Wall extending to the bottom of the Combi Wall to El -82. Please clarify	Drawings WS440 and WS441 have been revised and show an intermediate sheet pile tip elevation at -50.0' to match. Refer to Addendum 7, Article 2. Drawing WS627 is correct.
8	53	The new Waterfront Wall Cross Sections within the Addendum 2 drawings doesn't show the 12" Dia. PVC Sleeve covering the Tie Rods, for example this appear in plan set "SANDRESM1 Addendum 2 (292 drawings)" On sheet 873 of 2791 (Dwg WS600) Cross Section C-1. However all the Cross Sections in the original drawings this PVC Sleeve within the Tie Rods were shown, for example this appears in plan set on sheet 873 of 2791 (WS600) Cross Section C-1. This area was not "clouded" as a change so is this 12" Dia PVC Sleeve required for the Tie Rods, or is it just missing in the New Cross Sections provided in Addenda 2. Please clarify	The tie rods do not require PVC Sleeves. See Addendum 2, Article 2.

Addendum	Addendum Question No.	Bidder's Question	Response
8	54	Bid Item No ESCR-551.24.05 - 24" Steel Pipe Pile is referred to in Cross Section D-1 on Sheet Nos. 875 (WS 602) and also within similar cross sections on sheet nos. 878, 890 & 893 of Sheet 2791 (WS605, WS617 & WS620) and is shown in plan view on sheet nos. 993 thru 1000 (WS810 thru WS817) - Proposed South & North Embayment areas. This bid item is missing in the schedule of Values in Volume 1 of 3. Should this be a new bid item or should these piles be paid for under the existing Bid Item No ESCR-551.24.05C - Coated 24" Diameter x 0.5" wall thickness steel pipe pile as shown in Cross section F-2 of sheet no 886 of 2791 (WS613). Please clarify	Drawings WS602 and WS810 through WS817 have been revised with corrected bid item number for the proposed pipe piles, ESCR-551.24.75.C. Refer to Addendum 7, Article 2.
8	55	The plan view on Sheet no 584 of 2791 (Dwg F401) shows a shaded at approx. Sta 18+40 +/- a section No 5 cut thru it which the shaded area is to depict the need for Jet Grouting in this area whereas the elevation View below is missing the detail yet when you go to the overall Plan Transition 1 - Reach B on sheet no 610 0f 2791 (Dwg F850) it shows the detailed view at approx. Sta 18+39.50 that Jet Grouting is required as well as the details in Sections 3 & 5 on the same sheet. Please clarify	The profile elevation in drawing F401 has been revised to reflect the correct location of the jet grouting, at STA 18+40. Refer to Addendum 7, Article 2.
8	56	Re:Drawing WS146, note pay item ESCR-6.27 F. Kindly provide pay item on bid sheet	Item ESCR-6.27 F has been added. Refer to Addendum 6, Article 2.
8	57	Please add missing pay item for 55.11AB abandoning basins and inlets	Item 55.1AB has been added. Refer to Addendum 6, Article 2.
8	58	Drawing WS143, note pay item ESCR 6.27D. Kindly provide missing pay item on bid sheet	Item ESCR-6.27 D has been added. Refer to Addendum 6, Article 2.
8	59	On Sheet No 584 of 2791 (Dwg F401) within the latest Addendum no 3 drawings that were received on June 30th, they elevation view shows Proposed Steel Pipe Piles Bid Item No. ESCR-552.24.05.CJG but there is not a bid item that exist on most recent Bid Item Schedule of Values updated thru Addendum No 3 dated June 30, 2020 for this item. Also, Section B-4 at Sta 22.+43 on Sheet No. 595 of 2791 (Dwg F601) still shows that this proposed 24" Pipe Pile is to be paid under Bid Item ESCR-551.24.05C. Should this pile be paid under the existing Bid Item ESCR-551.24.05 CJG or is there a new bid Item ESCR-552.24.05CJG that was overlooked. Please clarify	Drawings F401 and F601 have been revised to show ESCR-551.24.05.CJG for the proposed steel pipe piles in jet grout. Refer to Addendum 7, Article 2.

Addendum	Addendum Question No.	Bidder's Question	Response
8	60	The elevation view on sheet 583 of 2791 (Dwg F400) (Addendum #3 dwgs) for approx Sta 11+30 to Sta 13+00 refers to a Proposed AZ46-700N Sheet Pile Bid Item ESCR-552.11 46CP however there is no new cross section for this area in Addendum #3 drawings as the current Section A-3 for Sta 11+63 on sheet 594 of 2791 (Dwg F600) still shows that this portion of the wall is to be paid for under Bid Item ESCR-552.11 46CPL. Please clarify	Drawing F400 has been revised. Refer to Addendum 7, Article 2. The corresponding cross section is A-4 on drawing F600.
8	61	The elevation view on sheet 585 of 2791 (Dwg F402) (Addendum #3 dwgs) for approx Sta 28+00 to Sta 31+25 refers to a Proposed AZ46-700N Sheet Pile Bid Item ESCR-552.11 46CP however there is no new cross section for this area in Addendum #3 drawings as the current Floodwall Table for Sta 28+00 to Sta 31+25 on sheet 597 of 2791 (Dwg F603) indicates that the proposed sheets will be AZ20-700 sheets and will be aid under Bid Item ESCR-552.11 20C. Please clarify	Drawing F402 has been revised to include AZ20-700. Refer to Addendum 7, Article 2.
8	62	The elevation view on sheet 593 of 2791 (Dwg F410) (Addendum #3 dwgs) for approx Sta 97+50 to Sta 98+80 refers to a Proposed AZ46-700N Sheet Pile Bid Item ESCR-552.11 46CIP however there is no new cross section for this area in Addendum #3 drawings as the current Section K-1 for Sta 93+17 on sheet 598 of 2791 (Dwg F610) still shows that this portion of the wall is to be paid for under Bid Item ESCR-552.11 46CP. Please clarify	Drawing F610 has been revised to include ESCR-552.11 46CIP. Refer to Addendum 7, Article 2.
8	63	The Pedestrian Swing Gate Schedule Table on Sheet 1131 of 2791 (Dwg FG260) refers to a Pedestrian Swing Gate for 15th Street but the ESCR Gates Summary on Sheet 1068 of 2791 (Dwg FG001) only list 6 gates and only one pedestrian gate No 6 for East 14th Street Crossing Pedestrian Gate. Also the Bid Value Schedule in Volume 1of 3 only list these 6 gates as separate bid items. Please clarify if there is to be a pedestrian gate at 15th Street.	Drawing FG260 has been revised to include only the 14th Street pedestrian gate. Refer to Addendum 7, Article 2.

Addendum	Addendum Question No.	Bidder's Question	Response
8	64	REDACTED	
8	65	Section C on Sheet no 966 of 2791 (Dwg WS761) shows a typical sliding joint detail that refers to Bid Item No 565.14200008 but the Proposed Waterfront Cross Sections on Sheets No 873 thru 902 of 2791 (WS607A thru WS629) within the most recent Addenda #3 drawings refer to this typical sliding joint to be paid for under Bid item No ESCR-567.LG. Please clarify	Drawings WS600 through WS629 have been revised. Refer to Addendum 7, Article 2.
8	66	There is no item number for the 8" Ductile Iron Pipe with cradle items. Please Clarify.	Watermain piping doesn't require cradle supports. PK-ESCR 607 "8" Dia. Ductile Iron Cement Water Pipe Line" shall be used for the water main work within East River Park.
8	67	On drawing PUD417 it shows pipe (P-1202B) with no pile or cradle, but on drawing PUD705 on the "Drainage Mini Pile Table" it shows that the pipe requires mini pile/cradle. Please Clarify.	The reason P-1202B is depicted in the Drainage Mini-Pile table is because the pipe is associated with structures STR-1202 and STR-1203 as shown in the table and is only included in the table for reference. The pipe does not require piles and the profile shown on PUD705 is correct.
8	68	The following pipes that require mini pile are not showing on the "Drainage Mini Pile Table" on drawing PUD705. The estimated total length of the piles is needed. The missing pipes are P-302B, P-4025, P-60, P-917, P-916, P-4025, P-11005, P-1220, and P-121. Please Clarify.	Pipes shown in the Drainage Mini Pile Table are shown for reference. Refer to the plans shown on PUD300 series & profiles shown in the PUD400 series drawings for pipes that requires piles. All piles should follow the NYCDEP Detail-SE2 and NYCDEP Detail-SE6.
8	69	Please clarify if Regulator M-24 Flood proofing mentioned in Sheet 1178/ DS 102 is paid under "51.71C00M24 MODIFICATION OF EXISTING CHAMBER M-24". There is no reference to pay item in page DS 102.	Bid item 51.71C00M24 has been removed from the bid schedule. Refer to Addendum 6, Article 2 for the current bid schedule.

Addendum	Addendum Question No.	Bidder's Question	Response
8	70	Please clarify item "51.11V000 DIVERSION CHAMBER". Chamber M-25 on page DS 302/Sheet 1189 is assigned to be paid under this item. Yet details page for M-25 Chamber on DS 500-502/Sheet 1227-1229 states all work for Chamber M-25 to be paid under Pay Item 51.11CS25 REGULATOR CHAMBER NO. M-25.	Drawing DS302 has been revised with the item number for Chamber M-25 changed to 51.11CM25. Refer to Addendum 7, Article 2.
8	71	Please clarify which chambers are paid under item “51.11V000 DIVERSION CHAMBER 14 each”.	All connections (12) and junction chambers (2) are to be paid under Item No. 51.11V000.
8	72	Please clarify location and scope of work for items "51.71C00M22 MODIFICATION OF EXISTING CHAMBER M-22", "51.71C00M23 MODIFICATION OF EXISTING CHAMBER M-23", "51.71C00M24 MODIFICATION OF EXISTING CHAMBER M-24", "51.71C00M36 MODIFICATION OF EXISTING CHAMBER M-36". Could not locate them in the drawings.	These items have been removed from the bid schedule. Refer to Addendum 6, Article 2.
8	73	Please clarify if work performed for Regulator Chamber M-29 is to be paid under Item 51.11HCM29 as per page DS 305/Sheet 1192. Bid item does not exist. Should it be paid under existing item 51.11CM29?	Drawing DS305 has been revised to include 51.11CM29. Refer to Addendum 7, Article 2.
8	74	Please clarify pay item for Junction Chamber JC-D01. Page DS 535/Sheet 1264 says work for this chamber will be paid under item 51.11CSD01 but item does not exist. Additionally, Note 3 of page DS 535 says all work for the structure should be paid under item 51.11CS26 - REGULATOR CHAMBER NO. M-26. What is the correct pay item for work associated to this Junction Chamber?	Drawing DS535 has been revised and Note 3 now references item 51.11V000. Refer to Addendum 7, Article 2.
8	75	Please clarify pay item for Junction Chamber JC-G01. Page DS 537 says work for this chamber will be paid under item 51.11CSG01 but item does not exist. Additionally, Note 3 of page DS 537 says all work for the structure should be paid under item 51.11CS26 - REGULATOR CHAMBER NO. M-26. What is the correct pay item for work associated to this Junction Chamber.	Drawing DS537 has been revised and Note 3 now references item 51.11V000. Refer to Addendum 7, Article 2.
8	76	Please provide the cast in place beam on S-508/Sheet # 2442. It says see the plan – there is nothing showed on the plan and there is no beam schedule.	The plan where the edge is shown is located on drawing S507. The detail of the edge beam is shown on drawing S512. There is no beam schedule as one beam detail is applicable for the entire perimeter of the building.
8	77	Beam Plate and Cap Plate Schedule shows P4 in drwg S-513 / Sheet # 2447. However there is no P4 on drawing S-503 /Sheet #2437 – Only P1, P2 , P3 are showing. Can you please clarify.	Refer to drawing S506 for location of post P4.

Addendum	Addendum Question No.	Bidder's Question	Response
8	78	What size underdrain pipes are used for the proposed amphitheater area?	Underdrain details and sizing can be found in the LD760 series and LD820 series.
8	79	What size underdrain pipes are used for the Franklin D Roosevelt Drive roadside area?	Underdrain details and sizing can be found in the LD760 series and LD820 series.
8	80	What size underdrain pipes are used near the proposed Soccer Field?	Underdrain details and sizing can be found in the LD760 series and LD820 series.
8	81	What size underdrain pipes are used near the Lawn area?	Underdrain details and sizing can be found in the LD760 series and LD820 series.
8	82	What size underdrain pipes are used for the Lawn area near proposed Multi-Use Field?	Underdrain details and sizing can be found in the LD760 series and LD820 series.
8	83	What size underdrain pipes are used near the proposed South Tennis Courts?	Underdrain details and sizing can be found in the LD760 series and LD820 series.
8	84	What size underdrain pipes are used near the proposed North Tennis Courts?	Underdrain details and sizing can be found in the LD760 series and LD820 series.
8	85	What size underdrain pipes are used for the Lawn area near Water Play?	Underdrain details and sizing can be found in the LD760 series and LD820 series.
8	86	What size underdrain pipes are used near the proposed Maintenance Area?	Underdrain details and sizing can be found in the LD760 series and LD820 series.
8	87	What size underdrain pipes are used near the proposed Field 7?	Underdrain details and sizing can be found in the LD760 series and LD820 series.
8	88	What size underdrain pipes are used in the field near the proposed Play area?	Underdrain details and sizing can be found in the LD760 series and LD820 series.
8	89	On sheet No 976 of 2791 (WS774) "Cut-off Sewer Crossing Details" it shows the details for the Sewer Outfall NCM-057 which is located approximately between Bents 78 and 79. Cross Section B on this same sheet depicts this portion of the wall to be a Combi-Wall as other sections depict this section as a Continuous Pipe Pile Wall. The elevation view seems to be correct with the cross sections and elevation views on other sheets/drawings. We believe that this Section B should be shown on the other side of the sewer outfall and a new cross section should be provided for the current location of section B depicting the proper type of wall at this location. Please clarify.	Drawing WS774 has been revised. Refer to Addendum 5, Article 3.

Addendum	Addendum Question No.	Bidder's Question	Response
8	90	Cross Section 4a "Pile Cap Type IVa" on Sheet 959 & 960 of 2791 (WS754 & S755) shows a dashed line that represents the cap bottom elevations, one for the interior side of the wall and one for the exterior side of the wall. These sheets also show Cross Section 4b "Pile Cap Type IVb", Cross Section 6a "Pile Cap Type VIa" and Cross Section 6b "Pile Cap VIb" are similar caps where both the interior and exterior side cap bottom elevations are different, however the cross sections are not showing the same dashed lines for the bottom of the cap. Shouldn't these cross sections also have a dashed line showing the different elevations for the bottom of these caps? Please clarify.	Dashed lines have been added to show different elevations on revised drawings WS754 and WS755. Refer to Addendum 7, Article 2.
8	91	The metal architectural mesh for the East 10th St and Delancey Street Bridges are shown on drawings BT105 and BD105 respectively and the mesh is called out to be paid for under NYC180002 which is in the schedule of values in Volume 1 of 3. However on general cross section on drawing BC105 the architectural mesh for the Corlears Hook Bridge this same architectural mesh is called out to be paid for under bid item NYC-607.064AD, which this bid item does not exist within the schedule of values in Volume 1 of 3. Please clarify if the Corlears Hook architectural mesh is to be paid for under the same item as the other two pedestrian bridges or if a new bid item and mesh type should be setup for the Corlears Hook Bridge. Please clarify.	Drawing BC107 has been revised. Refer to Addendum 7, Article 2.
8	92	The standard flood gate details on sheets 1156 and 1168 of 2791 (Dwgs FG708 and FG720) indicate that there are various field welds required within the various cross sections the floodgates. We are not sure why field welds are required for the installation of these gates as we would assume that these welds can be performed in the fabrication shop. If these are labeled correctly we would want to know if a bolted connection could be substituted for these field welds if they were intended to be called out this way. Please clarify.	The field welds for the 16Ga lock box shown on drawing FG720 can be shop welds. Drawing FG720 will be revised accordingly in a future addendum. On drawing FG708, the welds shown on Detail 2 and Detail 4 are shop welds. However, for Detail 2 Section A & Detail 3, field welds shown are required for braces to the gusset plates and other gate steel members. Bolted connection in this application is not accepted.

Addendum	Addendum Question No.	Bidder's Question	Response
8	93	The general cross sections on drawings BT105 and BD105 for the East 10th Street and Delancey Street Bridges respectively, calls for the main span railing to be paid for under bid item 568.12010010 and the ramp/ abutment railing to be paid for under bid item 607.91120001. Meanwhile, for the Corlears Hook Bridge the similar general cross sections on drawings BC105 indicates that the same main span railing is to be paid for under item NYC-607.064 AA as this item does not appear on the current schedule of values in Volume 1 of 3. In addition the Corlears Hook Bridge drawings do not show what bid item the railings for the abutments are to be paid under. Please clarify	Drawing BC107 has been revised with item 568.12010010 for the main span railing. Drawing BC145 has been revised with item 607.91120001 for the ramp/abutment railing. Refer to Addendum 7, Article 2.
8	94	REDACTED	
8	95	We did not see anywhere within the contract drawings that shows where Current Bid Item 449 ESCR-551.24.05.CD COATED 24" DIAMETER X 0.5 IN WALL THICKNESS STEEL PIPE PILE INSTALLED IN PREDRILLED LOCATION is used. Please clarify	Item ESCR-551.24.05.CD has been deleted and replaced by Item ESCR-551.24.75.C. Refer to Addendum 6, Article 2 for the current bid schedule. Refer to WS600 series for existing embayment cross sections and WS810-WS818 for proposed platform drawings for this item.
8	96	We did not see anywhere within the contract drawings that shows where Current Bid Item 451 ESCR-551.24.05.CJG COATED 24" DIAMETER X 0.5 IN WALL THICKNESS STEEL PIPE PILE INSTALLED IN TIMBER CRIBBING is used. Please clarify	ESCR-551.24.05.CJG is included in the contract drawings on drawing FG272 in the pile schedule, identifying the pipe piles for the 14th Street Gate crossing are all installed in jet grout. The item number for 24”x0.5” diameter pipe pile being installed in timber cribbing is also identified in the contract drawings on sheet FG207, identifying which piles for the FDR Drive Crossing Gate foundation will be installed in existing timber cribbing.
8	97	We did not see anywhere within the contract drawings that shows where Current Bid Item 455 ESCR-551.36.05.CSD COATED 36" DIAMETER X 0.5 IN WALL THICKNESS STEEL PIPE with interlock sealant installed in predrilled locations is used. Please clarify	Drawings with item ESCR-551.36.05.CSD include the revised WS860 and WS870. Refer to Addendum 7, Article 2.
8	98	We did not see anywhere within the contract drawings that shows where Current Bid Item 464 ESCR-552.11 20 C COATED AZ-20-700N OR EQUAL STEEL SHEET PILE INSTALLED IN TIMBER CRIBBING USING PRESSED-IN METHOD is used. Please clarify	Drawings with ESCR-552.11 20C include F603, the F400 profiles, and the WS600 series—where applicable for the floodwall. For the AZ-20-700N floodwall installed in timber cribbing, F603 has been revised to include ESCR-552.11 20CT. Refer to Addendum 7, Article 2.

Addendum	Addendum Question No.	Bidder's Question	Response
8	99	We did not see anywhere within the contract drawings that shows where Current Bid Item 466 ESCR-552.11 38 CW COATED PAZ42/AZ38-700N OR EQUAL COMBI-WALL INSTALLED is used. Please clarify	Item has been removed from the bid schedule. Refer to Addendum 6, Article 2 for the current bid schedule.
8	100	We did not see anywhere within the contract drawings that shows where Current Bid Item 470 ESCR-552.11 4219DI COATED PAZ42/NZ19 OR EQUAL COMBI-WALL WITH INTERLOCK SEALANT INSTALLED IN PREDRILL LOACTIONS is used. Please clarify	Item has been removed from the bid schedule. Refer to Addendum 6, Article 2 for the current bid schedule.
8	101	We did not see anywhere within the contract drawings that shows where Current Bid Item 471 ESCR-552.11 46CIP COATED AZ46-700N OR EQUAL STEEL SHEET PILE WITH INTERLOCK SEALANT INSTALLED USING PRESS-IN METHOD is used. Please clarify	Drawing F610 has been revised to include ESCR-552.11 46 CIP. Refer to Addendum 7, Article 2.
8	102	Sheets 993, 995,997,999; Please provide which pay item these 24" piles are paid under. Does the pipe piles in the North and South Embayment area receive a concrete plug and rebar cage?	A concrete plug and rebar cage is required. Drawing WS818 has been revised. Refer to Addendum 7, Article 2.
8	103	There are four different PAZ42/NZ19 combo wall pay items. Please define limits for each system.	New drawing WS441A, with a cut-off wall schedule and pay items, has been added. Refer to Addendum 7, Article 2.
8	104	There are four different AZ20 sheeting pay items. Please define limits for each system.	New drawing WS441A, with a cut-off wall schedule and pay items, has been added. Refer to Addendum 7, Article 2.
8	105	There are four different AZ46-700 sheeting pay items. Please define limits for each system.	New drawing WS441A, with a cut-off wall schedule and pay items, has been added. Refer to Addendum 7, Article 2.
8	106	Please reissue Sheet 850. The information is unreadable.	Drawing WS510 has been revised to be readable. Refer to Addendum 7, Article 2.
8	107	Sheet WS513: Please clarify pedestal elevation for Pier 164 to 166	Drawing WS513 has been revised. Refer to Addendum 7, Article 2. The pedestal elevations for P164(N) to P166(S) are listed on the pedestal elevation summary table. The P166(N) and P167 Pedestals heights from top of existing pier caps are denoted on Section S-1. These two pedestals are solid across the entire pier cap width and so their elevation changes as shown in the “Pedestal to pier 166 pile cap connection” detail. Elevations have been added to this detail for further clarity.
8	108	Sheet 965; Please confirm the length of the required MC13x50 splice plate for the threaded rod wales	The length of the splice plate has been added to revised drawing WS760. Refer to Addendum 7, Article 2.
8	109	Sheet 1323; Pile tip elevation table states sta 1+07 - sta 2+91; 30" RCP Branch Interceptor foundation plan show stationing starting at 11+06.02. Please provide correct elevation chart.	Elevation chart updated to reflect new stationing. See revised drawing DS822. Refer to Addendum 7, Article 2.

Addendum	Addendum Question No.	Bidder's Question	Response
8	110	Sheet 1517; Please provide pay item 70.13 MV	Drawings PUD700 and PUD701 have been revised to include item 70.13 MN. Refer to Addendum 7, Article 2.
8	111	Sheet 1522; Please provide mini pile details on the following structures: STR-302,STR-45,STR-60,STR-917,STR-916,STR-11005,STR-1220 and STR-121	Please refer to the Drainage/Sanitary Structure Pile Cap Detail on drawing PUD705.
8	112	Sheet 1522; Will the following structures require mini-piles if shown on table, but not on sanitary profiles : STR-403,STR-516,STR-903,STR-1003,STR-1103,STR-1202 and STR-1203	Follow table on PUD705.
8	113	Please provide recommended pile bent spacing for all Park Drainage pipe runs that requires mini pile foundations	See revised drawings PUD705 and PUD400-PUD 417 that reference NYCDEP Standard Detail-SE2 and NYCDEP Standard Detail-SE6 for pile spacing. Refer to Addendum 7, Article 2.
8	114	Sheet 1522; Does the representation of the "Pile Plan" the typical detail for "Park Drainage" structures that require mini-pile foundations?	Correct, that detail is intended for any standard NYC Parks standard pile-supported structure
8	115	Contract drawing WS142 (Sheet 710), detail drawing states "Demolition Type C is on Item No. ESCR-6.27C", but Note 4 states "Item No. ESCR-6.27B". Please clarify which pay item is correct.	Correct item is ESCR-6.27C. Drawing WS142 has been revised with a corrected Note 4. Refer to Addendum 7, Article 2.
8	116	Please provide as-built drawings for the existing Esplanade Structures and Waterfront Structures.	All available as-builts have been provided.
8	117	For Item No. "ESCR-6.27 PRSE" on Sheet 709 and "ESCR-6.27 PRNE" on sheet 715, please provide details for the existing steel pipe pile under the Esplanade. Is there any concrete in the steel pipe piles?	The existing steel pipe piles have concrete. Drawings WS144, WS148, WS145, & WS147 have been revised to include "CONCRETE-FILLED" in pipe pile demo callout. Refer to Addendum 7, Article 2.
8	118	For Reach E, F and G in Phase 1 on drawings PH006 to PH009 (Sheet 6 to 8), please provide the limit of work (width or the length from riverside) for the first early closure area and second early closure area.	The contractor shall occupy the minimum width necessary to install the flood walls at these locations that will allow adjacent park amenities to remain in operation. Refer to drawings WS003 through WS005.
8	119	Please provide a Profile view through the proposed 66” Micro-Tunnel this information in critical in determining the production of the machine based on the elevation change.	Drawings PCC350, PCC305A, and PCC351 have been revised. Refer to Addendum 7, Article 2.
8	120	Please refer to Spec Section ESCR 4.11.8, (J) there is mention of the settlement criteria which needs to be met before the pre-loaded stockpiles may be re-graded for other work to commence. For bidding purposing provide the settlement criteria so that we can analyze the existing ground conditions and determine a more accurate duration for the pre-loading.	The settlement criteria for fill with no ground modification and for prefabricated vertical drains is to achieve 95 percent consolidation within 6 months of embankment completion. The settlement criteria for the deep soil mix columns is to limit the total settlement to less than 1.5 inches.

Addendum	Addendum Question No.	Bidder's Question	Response
8	121	Please confirm that the Contractor is responsible for all costs associated with the hiring a third-party testing company to perform Soil Compaction Tests and Modified Protector Tests every 1,000 CY as outlined in Spec Section ESCR 4.11.7, (A) and (L)	Yes, the Contractor is responsible for these costs.
8	122	Reference: Delancey Street Bridge, Drawings BD189 & 185, Sheets 316 & 312. All three bridge elevations on Drawing BD189, at continuation line have reference to drawing BD185. However, text on drawing BD185, ① Delancey St. Ramp - Ramp North Elevation at continuation line reads: "O1/BD422)". Please clarify if listed drawings at continuation lines on above referenced drawings are correct and please provide missing drawing BD422?	Drawings BD184, BD185, BD186, and BD189 have been revised. There is no drawing BD422; the reference on BD185 has been revised. Refer to Addendum 7, Article 2.
8	123	Reference: Delancey Street, Drawing BD146, Sheet 273. Note at Removable Bollard Section reads: "Crushed Stone in place (typ.) Item No. 623.12". This item is not part of the bid breakdown. Please clarify.	Item has been added. Refer to Addendum 6, Article 2 for the current bid schedule.
8	124	Reference: East 10th Street Bridge, Drawings BT115 & 117, Sheets 365 & 367. On Drawing BT115, West Abutment Section, at top of bridge seat is shown 10-#10@6" (T&B). However, on same Elevation on same drawing, and on Drawing BT117, Sections E and E1 is shown #6 @ 6". Please clarify what is correct?	See revised west abutment section on drawing BT115. Drawing BT117 is correct. Refer to Addendum 7, Article 2.
8	125	Reference: East 10th Street Bridge, Drawings BT119 & 122, Sheets 365 & 372. On Drawing BT119, Wall C Elevation, footing thickness is 3'0". However, on Drawing BT122, Typical Section (Looking East) footing thickness is 4'-0". Please clarify what is correct?	Drawing BT119 has been revised to clarify that the footing thickness for Wall C shall be 4'-0" as shown in Section A of BT122. Refer to Addendum 7, Article 2.
8	126	Reference: East 10th Street Bridge, Drawing BT120, Sheet 370, Wall E Reinforcement (Looking East), and Wall E footing on Drawing BT121, Sheet 371 Pedestrian Ramp Footing Reinforcement Plan. Please confirm that payment for 4" Foam Material shown on above referenced drawing, will be made under Item No. 555.08 Footing Concrete, Class HP and Item No. 555.09 Concrete for Structures, Class HP?	Drawings BT120 and BT121 have been revised. Refer to Addendum 7, Article 2. On BT120, Wall E Reinforcement (Looking East), the payment for 4" Foam material shall be paid under item 555.09. On BT121, for Wall E footing 4" Foam material shall be paid under item 555.08.
8	127	Reference: East 10th Street Bridge, Drawing BT105, Sheet 355, Cross Section B/104. Please provide the width of EPS (Geofoam Block), Item No. 203.03950017 Extruded Polystyrene Fill and Select Granular Fill, Item No. 203.07 to fill space between EPS and new West Approach Ramp concrete walls, since it is not clearly shown on above referenced cross section?	Drawings BT105 and BD105 have been revised to clarify a 3-inch max gap (to be filled with granular fill, as noted already) between the edge of the Geofoam and the ramp wall. Refer to Addendum 7, Article 2.

Addendum	Addendum Question No.	Bidder's Question	Response
8	128	Reference: East 10th Street Bridge, Drawing BT105, Sheet 355, Cross Section B/104. Thickness of Select Granular Fill above EPS varies and is shown at two locations on above referenced Cross Section, but it is not shown in area between West Approach Ramp Walls C and D. a) Please provide missing information. b) Please clarify if including but not limited to EPS, sand backfill, select granular fill, geomembrane, etc. need to be installed between Approach Ramp Wall D and South Stair Wall?	See revised drawings BT105 and BD105 that note the following: a) When height under ramp is 3'-0" or less, item 203.02 Select Granular Fill shall be used to fill area under ramp. When height under ramp is greater than 3'-0", see typical section for EPS related details. b) See response to "a" above. Refer to Addendum 7, Article 2.
8	129	Reference: East 10th Street Bridge, Drawing BT105, Sheet 355, Cross Sections B & C/104 and Drawing BT161, Sheet 411, Typical Parapet Details. Thickness of Concrete Slab (Item 557.0109) is 1'-0" per Cross Sections B & C/104. However, per Typical Parapet Details deck thickness appears to be less than 1'-0", because bottom portion of #5@6" is 1'-0". Please clarify deck thickness.	Deck thickness of concrete slab shall be minimum 1'-0" per sections B & C shown on drawing BT105. Drawings BT161 and BD172 have been revised. Refer to Addendum 7, Article 2.
8	130	Reference: East 10th Street Bridge, Drawing BT105, Sheet 355, Cross Sections B & C/104 and Drawing BT161, Sheet 411, Typical Parapet Details. As per Cross Sections B & C/104 on Drawing BT105, and Typical Parapet Details Drawing BT161 typical parapet height is 6". However, per Section A/BT122 and X/BT123 parapet height varies from 6" to 18". Contract drawings do not show parapet transition from 6" to 18". Please clarify?	Refer to drawing BT131 for north and south parapet transition details from west ramp span to arch span.
8	131	Reference: East 10th Street Bridge, Drawings BT127 & 130, Sheets 377 & 380. Please clarify if payment for construction of East Ramp Deck, will be made under Item No. 557.0109 or under Item No. 557.2001 and please clarify if deck reinforcement cost to be included under the Item No. 557.0109 or under Item No. 556.0202?	Drawing BT127 has been revised to clarify the following: East ramp deck to be paid for under item No. 557.0109. Deck reinforcement shall be included under item 557.0109 per specification. Refer to Addendum 7, Article 2.
8	132	Reference: East 10th Street Bridge, Drawings BT157, 158 & 159, Sheets 407, 480 & 409. Please clarify if payment for construction of 8" thick walls and 8" thick slabs shown on above referenced drawings and sections, will be made under Item No. 555.09 and reinforcement cost to be included under the Item No. 556.0202?	As noted, the slab shall be paid for under item 555.09. Drawing BT157 has been revised to clarify that the 8-inch walls will also be paid for under 555.09. For both items, the reinforcement will be paid for under item 556.0202 per specification. Refer to Addendum 7, Article 2 for revised drawings.
8	133	Reference: East 10th Street, Drawing BT136, Sheet 386. Note at Removable Bollard Section reads: "Crushed Stone in place (typ.) Item No. 623.12". This item is not part of the bid breakdown. Please clarify.	Item has been added. Refer to Addendum 6, Article 2 for the current bid schedule.

Addendum	Addendum Question No.	Bidder's Question	Response
8	134	Reference: Houston Street, Drawing BH119, Sheet 516. Please confirm that Wall W7, Bottom of Footing Elev. as shown on referenced drawing is correct.	Drawing BH119 has been revised to clarify that the bottom of footing elevation shall be EL. 6.07 for Wall W7. Refer to Addendum 7, Article 2.
8	135	Reference: Houston Street Bridge, Drawing BH102, Sheet 499, Section A/BH101. Please clarify that Proposed Section A/BH101, shows typical section from STA. H100+44 to H104+04	Proposed Section A/BH101 shows typical section from 100+44.11 to 104+04.11. Drawings BH102, BH103, and BH117 have been revised. Refer to Addendum 7, Article 2.
8	136	Reference: Houston Street Bridge, Drawings BH118, 117 & 103, Sheets 515, 514 & 500. Please confirm that top of grade and top of parapet at Wall W1 are the same, and please confirm that top of wall and existing grade are the same, and please confirm that Wall 1 height is 2'-0".	Per BH103 and BH117 Sections D1 and D2, the top of parapet is not the same as top of proposed grade but the top of wall and top of proposed grade are the same at Wall W1. The top of existing grade and top of wall are not the same. The height of Wall W1 is not 2'-0. The height of the wall varies as shown in sections D1 and D2 on BH117. Callouts on drawings BH118 and BH119 have been revised to be consistent with information provided on section A/BH117. Refer to Addendum 7, Article 2.
8	137	Reference: Houston Street Bridge, Drawings BH117, 118 & 121, Sheets 514, 515 & 518, Section A/BH117. a) As per, Section A/BH117, Drawing BH117, distance from top of wall to top of grade is 0" for W2, W3 & W18. However, per Drawing BH118, Retaining Wall Elevation average distance from top of wall to top of grade for W2 is +/-2.95', for W3 is +/-3.61', and for W18 top of wall is not even shown on Drawing BH121, Sheet 518. Please clarify and provide missing information. b) As per, Section A/BH117, Drawing BH117, wall W2 and W3 thickness is 2'-0" with change to +/-2'-10" (corbel) and corbel height is 3'-0" and varies. However, per Drawing BH118, Retaining Wall Elevation average distance from top of wall to top of footing for W2 and W3 is +/-1.5'. Please clarify above because it will help in determination of retaining wall thickness/transition.	a) As the 0" dimension is called out in section A/BH117 for W2, W3, and W18, the top of grade shall be level with top of wall. Callouts on revised drawings BH118 and BH121 have been added to be consistent with information provided on section A/BH117. Refer to Addendum 7, Article 2. b) Drawing BH117 has been revised with a 3'-0" maximum corbel height noted. Refer to Addendum 7, Article 2.
8	138	Reference: Houston Street Bridge Retaining Walls, Drawing BH117 (Wall Sections), BH118 through BH121 (Wall Elevations), and BH102 & 103. Please confirm that vertical payment limits for Item 569.03 Vertical Faced Concrete Parapets, as shown on above referenced drawings, should include concrete from Top of Grade up, and payment for Item No. 555.09 Structural Concrete should include concrete from Top of Grade down to top of footing?	That is correct, as shown on BH102 and BH103.

Addendum	Addendum Question No.	Bidder's Question	Response
8	139	Reference: Flood Protection Drawings, Waterfront Demolition Section Sheet 4 of 10, Drawing WS143, Sheet 711. On above referenced drawing are shown two (2) demolition types, Type D1 – Item No. ESCR-6.27D and Type D2 – Item No. ESCR-6.27C. However, Item No. ESCR-6.27D is not part of the bid breakdown and Item No. ESCR-6.27C is DEMOLITION EXISTING ESPLANADE TYPE C-1 AND C-2. a) Please clarify above conflicting demolition types information. b) Please provide bid items for Type D1 and D2 demolition types shown on Waterfront Demolition Plans.	Item ESCR-6.27 D covers both type D1 and D2 demolition and has been added to the bid schedule. Drawing WS143 has been revised. Refer to Addendum 6, Article 2 for current bid schedule and Addendum 7, Article 2 for revised drawings.
8	140	Reference: Flood Protection Drawings, Waterfront Demolition Plan WS101, Sheet 671 and Waterfront Demolition Section Sheet 2 of 10, Drawing WS141, Sheet 709. On Drawing WS101 are shown limits of Demolition Type B. However, Section B/WS141 reads: “Demolition Type B: Proposed South Embayment – Item No.-ESCR-6.27 PRSE”. Item No. ESCR-6.27 B is DEMOLITION EXISTING ESPLANADE TYPE B and Item No. ESCR-6.27 PRSE is DEMOLITION OF THE EXISTING ESPLANADE STRUCTURE FOR THE PROPOSED SOUTH EMBAYMENT (REMOVAL LIMITS AS SHOWN ON THE CONTRACT DRAWINGS). a) Please clarify above conflicting information. b) Does the cross section shown on sheet WS141 in the Flood Protection plans only correlate to the Item No. ESCR-6.27 PRSE and not ESCR-6.27 B? And if so, is there a cross section for ESCR-6.27 B? c) Removals limits for Item No. ESCR-6.27 PRSE are not shown on plans. Please provide missing information. d) Please confirm that Engineer Quantity for Item No. Item No. ESCR-6.27 B is correct, since this type of Waterfront Demolition is shown only on Drawing WS101?	The cross section on sheet WS141 correlates to ESCR-6.27 PRSE. Item ESCR-6.27 B has been removed from the bid schedule. Refer to Addendum 6, Article 2. Refer to WS101 for removal limits for the proposed south embayment.
8	141	Reference: Flood Protection Drawings, Waterfront Demolition Plan WS103, Sheet 673 and Waterfront Demolition Section Sheet 5 of 10, Drawing WS144, Sheet 712. On Drawing WS103 are shown limits of Demolition Type E1. However, Section E1/WS144 reads: “Demolition Type E1: Existing South Embayment Center – Item No.-ESCR-6.27 EXSE” and Section E2/WS144 reads: “Demolition Type E2: Existing South Embayment Edge – Item No.-ESCR-6.27 EXSE”. Item No. ESCR-6.27 EXSE is DEMOLITION OF THE EXISTING SOUTH EMBAYMENT (REMOVAL LIMITS AS SHOWN ON THE CONTRACT DRAWINGS). Please clarify above reference to Type E1 and E2 Demolition?	Demolition Type EI & E2 are both covered under the bid item ESCR-6.27 EXSE.

Addendum	Addendum Question No.	Bidder's Question	Response
8	142	Reference: Flood Protection Drawings, Waterfront Demolition Plan WS103, Sheet 673 and Waterfront Demolition Section Sheet 7 of 10, Drawing WS146, Sheet 714. On Drawing WS103 are shown limits of Demolition Type F and Section G/WS146. However, Section G/WS146 reads: "Demolition Type G: Partial Demolition of Esplanade Pile Cap– Item No.-ESCR-6.27 S". Item No. ESCR-6.27 S is DEMOLITION OF STRUCTURES and not Type G Demolition. Please clarify above reference to Type G Demolition.	Drawing WS146 and bid schedule have been revised to include item ESCR-6.27 G. Refer to Addendum 6, Article 2 for current bid schedule and Addendum 7, Article 2 for revised drawing.
8	143	Reference: Item No. Item No. ESCR-6.27 C DEMOLITION EXISTING ESPLANADE TYPE C-1 AND C-2. Please confirm that Engineer Quantity for Item No. Item No. ESCR-6.27 C DEMOLITION EXISTING ESPLANADE TYPE C-1 AND C-2 is correct?	There is no Type C1 or C2. Specification has been revised. Refer to Addendum 6, Article 3.
8	144	Many of the sections shown on drawings LD826, LD827, LD829 differ from what is shown on LD911 as well as what is in the table on LD911A. Please clarify which details are correct.	Sizing of walls is included in the LD900 series.
8	145	Please clarify that the use of turbidity curtains as the only means of sediment control has been approved by the USACE under the Owner's project application permit for demolition of the existing esplanade. Please verify that the Owner's permit with the USACE does not require cofferdam(s) to be installed for any demolition of the existing esplanade.	Per the USACE provisional permit (dated March 12, 2020), turbidity curtains will be installed in the East River prior to demolition of the existing East River bulkhead and esplanade. Cofferdams required only for construction of the proposed outfalls.
8	146	Please clarify if the USACE permit applied for under Article B15 of the Special Provisions was exclusively filed for the permanent works denoted on the Contract Drawings and if that permit can be utilized for the Contractor's temporary marine works or not.	The temporary and permanent work covered by the USACE permit is referenced in the provisional permit (dated March 12, 2020).
8	147	Please clarify if the potential barge access locations depicted on the Contract Drawings are to be covered under the Owner's application for USACE permit denoted in B15 and if those barges can be spudded since the Owner has denoted the existing esplanade pier cannot be utilized as mooring for the Contractor's marine equipment.	Barging activities are covered under the permit, with the stipulations noted in the provisional permit as well as any other conditions determined by NYSDEC.
8	148	Please confirm that the cofferdams referenced in the utility drawing notes fall under the USACE permit the Owner applied for in Article B15 of the Special Provisions.	The USACE provisional permit (dated March 12, 2020) includes the cofferdams.

Addendum	Addendum Question No.	Bidder's Question	Response
8	149	Addendum 4; Question 8; sheet 2 of 9; The NYCDCC stated that from January 15th – May 31st, no installation of cofferdams. Additionally, avoid pile work, sheet pile work, and any other in-water work outside of cofferdams from March 1st – June 30th. Please address the following: 1.Special Provisions; Article B15 Us Army Corps of Engineers Requirements; paragraph D states pile driving activities that occur during the presence of ESA -listed species, the permittee shall ensure the use of a vibratory hammer. If the use of an impact hammer is practical, 20-minute soft starts will commence. Will the approved Army Corp permit now state no water work unless inside a cofferdam from March 1st – June 30th?	Contractor shall base the bid on the USACE provisional permit (dated March 12, 2020). Per the USACE provisional permit, the only activities entirely restricted between January 15th and May 31st are the installation of the cofferdams. Other in-water activities are permitted, and must comply with the permit conditions. In addition, any conditions or stipulations required by NYSDEC must be adhered to.
8	150	Addendum 4; Question 8; sheet 2 of 9; The NYCDCC stated that from January 15th – May 31st, no installation of cofferdams. Additionally, avoid pile work, sheet pile work, and any other in-water work outside of cofferdams from March 1st – June 30th. Please address the following: 2.The contract documents and specifications do not stipulate any cofferdam installation (other than outfalls) for the demolition or construction of the Esplanade, Cutoff wall, or any other elements of the Waterfront Structure. Will new drawings show the anticipated cofferdams for these activities?	Per the USACE provisional permit (dated March 12, 2020), cofferdams are authorized for the installation of the outfalls only. Turbidity control requirements are noted in the provisional permit for demolition and construction of the esplanade and cutoff wall. Additional conditions or stipulations required by NYSDEC must be adhered to.
8	151	Addendum 4; Question 8; sheet 2 of 9; The NYCDCC stated that from January 15th – May 31st, no installation of cofferdams. Additionally, avoid pile work, sheet pile work, and any other in-water work outside of cofferdams from March 1st – June 30th. Please address the following: 3.Will the new Army Corps permit allow the contractor to perform any in-water activities outside potential cofferdams from January to June? E.g., spudding of barges, movement of barges, material delivery, any work disturbing the mudline such as the cutting of timber or steel piles, or any other requirements for the project?	Per the USACE provisional permit (dated March 12, 2020), the only activities entirely restricted between January 15th and May 31st are the installation of the cofferdams. Other in-water activities are permitted, and must comply with the permit conditions. In addition, any conditions or stipulations required by NYSDEC must be adhered to.

Addendum	Addendum Question No.	Bidder's Question	Response
8	152	Addendum 4; Question 8; sheet 2 of 9; The NYCDCC stated that from January 15th – May 31st, no installation of cofferdams. Additionally, avoid pile work, sheet pile work, and any other in-water work outside of cofferdams from March 1st – June 30th. Please address the following: 4.Special Provisions; Article B15 Us Army Corps of Engineers Requirements; paragraph E, O, P, and R explicitly states the requirements of turbidity management for all in-water work. In Addendum 2 issued by the NYC DDC, sheet 666, the agency deleted all in water-sediment control measures. As the contractor is required to abide by the US Army Corps permit stipulations, the agency has removed all specific notes associated with maintaining these requirements. What was the intent of eliminating these notes?	Notes have been removed to avoid contradictory information. Contractor shall follow notes provided on drawings ESC001 to ESC155 and specification section ESCR 9.30.
8	153	Addendum 4; Question 8; sheet 2 of 9; The NYCDCC stated that from January 15th – May 31st, no installation of cofferdams. Additionally, avoid pile work, sheet pile work, and any other in-water work outside of cofferdams from March 1st – June 30th. Please address the following: 5.Please verify that the installation of the proposed cut-off wall is not considered a cofferdam; therefore all work associated with the sheeting wall is excluded from the restrictions outlined in Special Provisions; Article B15 Us Army Corps of Engineers Requirements; paragraph C and D. It is the bidder's understanding that a turbidity curtain is all that is required, but this assumption requires the clarification requested in the previous question.	Per the USACE permit, the installation of the cut-off wall is not considered a cofferdam. The cut-off wall is to be installed largely within the alignment and landward of the existing bulkhead. The sheet piles would be pile driven, initially vibrated down and driven to final tip elevations. All pile driving activities shall be completed in accordance with the requirements of the provisional permit. All other applicable requirements for in-water activities must be adhered to. In addition, any conditions or stipulations required by NYSDEC must be adhered to.
8	154	According Section 564.02010211 – Bridge Hanger Assemblies the strands shall be open spiral strand. Will the contractor be allowed to take into account different type of strands, that meets or exceeds the requirements, such as Full Locked Coil?	Proposals for alternate strand types will be entertained as part of a VECP per the requirements of the S-Pages.
8	155	According ASTM A586 the outer wires shall be provided with Class C weight zinc-coated. Will the contractor be allowed to use Galfan (Zinc-Aluminum coating) instead of Class C zinc? As this product offers a higher corrosion protection and it complies with ASCE 19-16 design code.	Proposals for alternate coatings will be entertained as part of a VECP per the requirements of the S-Pages.
8	156	Ref: Bid Item 202.12003 Removing Superstructure and obstructions. Kindly clarify what work is covered by this item.	Item 202.19 has been added for the substructure removal. Refer to Addendum 6, Article 2 for the current bid schedule.

Addendum	Addendum Question No.	Bidder's Question	Response
8	157	Drawings LM-300 and LM 500 series show details of various pavements. Kindly clarify the exact pay items for the described pavement base items.	Pay items for pavement types shown in LM300 and LM500 series are included on Paving Detail sheets (LD727, LD728, and LD729).
8	158	With reference to the temporary pedestrian bridge over FDR Drive. Specification section ESCR-HW-901- Temporary Phasing Measures. A. What is the Pedestrian loading required?	The pedestrian Live Load shall be a minimum of 90 psf.
8	159	With reference to the temporary pedestrian bridge over FDR Drive. Specification section ESCR-HW-901- Temporary Phasing Measures. B. Will there be any vehicle loading required. If so, what load rating is required?	No vehicles, other then those utilized by the contractor as part of their normal bridge maintenance (i.e. snow removal, light pole luminaire replacements, etc.) are anticipated to utilize the temporary pedestrian bridge.
8	160	With reference to the temporary pedestrian bridge over FDR Drive. Specification section ESCR-HW-901- Temporary Phasing Measures. C. Will the temporary bridge need to carry any utilities?	The temporary bridge will only require utilities for temporary lighting as applicable.
8	161	Track House : There is no beam schedule and beam CIP's dimensions are not indicated on the drawings. Can you please clarify?	All CIP beams are one size and shown on drawing S513
8	162	Comfort Building : There is no info on " House Trap Pit ". Can you please clarify?	Plumbing House Trap detail is shown on drawing P702 & P705.
8	163	The "Proposed Flow Diversion Structure" that appear on DWG PUD302,303,304,306,307,308 does not have an item number & does not go under any other item. Please provide a pay item for this work	Refer to the Structure Type Schedule, drawings PUD003 and PUD004. Flow Diversion Structure or "FDS" is paid for under Item no. PK-ESCR 691 and other related items noted on the table.
8	164	It is unclear to which structures in the parks require a drywell (Item PK-ESCR 405). Please clarify.	Drainage structure nos. STR-4027, STR-6002 and STR-11018 are all Drywells. Additional quantities may be required for site connection permit requirements.
8	165	Detail DS424 for RCP pipes shows that 6" Stone Ballast is required under concrete cradle. Please clarify, under which item this material is covered. Since it is not under items 50.21XXXXXXX based on specification section 50.21.	Crushed stone bedding (NYCDEP Spec 40.12) shall be deemed included in the prices bid for all contract items of work. No direct pay will be issued for crushed stone under NYCDEP sewers.
8	166	Please clarify location of bid item "6.91 REFLECTIVE CRACKING MEMBRANE (18" WIDE)". Could not locate this item in the drawings.	The cracking membrane can be found on drawings BD209, BT199, BT200 and HW 700. It is also shown on NYCDOT Standard Details of Construction drawings H1034 and H1042A.
8	167	Please clarify if signs for MPT are to be paid under item "6.25 RS Temporary Signs", as seen on bid item list, or under "6.70 MPT" as stated in MPT drawing notes.	Temporary construction signs for MPT are paid under Item 6.70 - Maintenance and Protection of Traffic.
8	168	Drawings SM311/SM312 (sheet 81-82) show preloading fill areas where drawings SM303/SM304 (sheet 73-74) do not show any earthwork settlement mitigation plan. Please clarify.	All certain areas, as shown on the drawings, require preloading to reduce future settlement when the site is "formed" for use.

Addendum	Addendum Question No.	Bidder's Question	Response
8	169	Drawing SM311 (sheet 81) shows preloading fill area at S of Delancey Ped Bridge. This fill covers the areas for Ph 1 and Ph2 per phasing plans drawings PH6 and PH16. Please clarify.	The phasing plans are suggested only. The contractor shall submit the specific phasing plan for review and approval. This plan can include adjusted limits as necessary to accomplish the work in accordance with the contractor's planned operations and sequences. Please reference the requirements of Drawing PH001 and the contract specifications.
8	170	Phasing drawings PH010 & PH011 (Reaches I & J) show that 10th St Playground and Basketball Court is open in Phase 1. However the Milestone drawings require us to build the Floodwall in Phase 1. Can you please clarify when the flood wall section 83+50 to 90+00 can be built while this section is open to public?	The floodwall in reaches I and J must be constructed while those reaches are closed. The contractor shall schedule his work accordingly to meet the floodwall milestone date.
8	171	Can you please provide Specification ESCR-7.13 per Note 6 in drawing PH01?	Drawing PH001 has been revised and Note 6 now references specification ESCR-7.13 PK. Refer to Addendum 7, Article 2.
8	172	Can you please identify project area 1.A, 1.B, 1.C which was referred in drawing PH01 for open park amenities? These project areas are not shown in phase drawings.	Drawing PH001 has been revised. Refer to Addendum 7, Article 2.
8	173	SANDRSESM2 bid on May 28, 2020. It is now 2 months later and that contract has not been awarded. Documents for SANCDRESM1 state Phase 1 Floodwall must be completed by August 1, 2023. Past experience has been that it can take quite some time for award of NYC contracts. This uncertainty places undue risk on the contractor. We propose setting number of calendar days from award for the completion of Phase 1.	Phase 1 completion date has been deleted. Refer to Addendum 6, Article 3.
8	174	Please clarify that the shared access road referenced on Contract Drawing PH001 is not part of the shared path depicted on The LP300 and 400 series drawings and that the shared path is not open to the public until the work in a particular phase is completed.	The shared use path will be closed to the public and available for the contractor's use. However, the contractor must always maintain safe access to open portions of the park across the shared use path as necessary.

Addendum	Addendum Question No.	Bidder's Question	Response
8	175	Please clarify what the intent of notes 3 and 4 on Contract Drawing PH001 under "Pier 42 Construction Access". Specifically Note 4 where the end date of June 2022 is given. This can be interpreted as a Constraint to this contract. Notes 3 and 4 require more detail then coordination with adjacent contractors. For example, is it the Owner's intent to make Pier 42 the priority if they have to close the access road for their sewer work? If that is the intent, we would have to make a new access road somewhere else which would not be accomplished quickly due to the vicinity of this project and the trucking restrictions required on the FDR drive. Clarification is required to the bidders if alternate access will be required at any time the Pier 42 contractor deems necessary or not.	Note 4 was intended to provide current information regarding the time and duration of construction work at Pier 42 only. No alternate access is anticipated during the Pier 42 sewer work. The Pier 42 sewer work is forecast to occur Spring/Summer 2021 and to take a total 5-6 days.
8	176	Please clarify where the Pier 42 contract plans to exit the shared access road. This is required to determine additional gates and/or guards. Clarify that Pier 42 Contract would provide the guards for their gates. Also, clarify that the Pier 42 contract is responsible for all SWPPP requirements with respect to their use of the shared access road. How will this delineation of maintenance be managed? Clarify that is not the intent of the Owner for ESCR to be responsible for any SWPPP or MPT required for the Pier 42 contract.	The Pier 42 contractor will be responsible for its security into and out of its site. The exact locations of the Pier 42 contractor entry point will be determined upon award of that project. The bidders under SANDRESM1 are responsible for all maintenance, etc., of the shared use path in its entirety. It is confirmed that the SANDRESM1 bidder is not responsible for any Pier 42 SWPP or MPT.
8	177	Please reference the OCMC stipulations for this job. Note 2 of the 4/2 draft states that there will only be between 3 and 6 total closures allowed for the FDR Drive. The 3 pedestrian bridges will each require 1 total closure for both the demolition of the existing bridges and the installation of the proposed bridges, which is assumedly the basis for the 6 total allowable nights. Please consider adding 2 additional nights for the installation and removal of the temporary walkway located at the Corlears Hook Bridge, which will also require full closures in order to erect and remove.	The contractor shall request 10 hour and 5 hour FDR Drive roadway closures from OCMC as part of their normal permitting process and as their planned construction operations and sequence requires. The draft OCMC stipulations included as part of the bid package serve to document some of the initial conversations and ground work that has been established as part of the design process.
8	178	Please indicate if a Final OCMC permit will be issued prior to the bid date.	No. The draft stipulations included will not be updated prior to bid. Note that the contractor must obtain all roadway closure permits from OCMC .

Addendum	Addendum Question No.	Bidder's Question	Response
8	179	Please clarify if the Construction Fence (typ.) seen in the MPT Drawings (Pages 2649-2747) are to be paid under bid item 6.70 - MPT (Lump Sum) or bid item 6,34 ACTP. The spec (Page 905 –Volume 3 of Specs) states "No separate payment will be made for Items 6.34 ACT, 6.34 ACTP, 6.34 BCT, 6.34 ADT, and 6.34 BDT; the costs must be included in the price bid for Item 6.70, Maintenance and Protection of Traffic." What is the purpose of having a separate bid item in bid item list if no payment is supposed to be made?	Item 6.34 ACTP has been removed. Refer to Addendum 6, Article 2.
8	180	Reference Bid Schedule Form page B-71 (Revision #1). Bid Items ESCR-901-SSVS, ESCR-902-SSVS, ESCR-903-SSVS, ESCR-904-SSVS and ESCR-905-SSVS are all ALLOWANCE items for Sub-Slab Venting Systems but no price has been posted to columns 5 and 6. Please clarify.	Item descriptions for items ESCR-901-SSVS, ESCR-902-SSVS, ESCR-903-SSVS, ESCR-904-SSVS, and ESCR-905-SSVS have been updated in the bid schedule. Refer to Addendum 6, Article 2.
8	181	Tug Boat requirements are for the Tug to be provided 24/7 365 on site , and is allowed to be "assigned to Construction", Please confirm that if the tug is making barge moves to and from the waterfront loading facility WF1 to WF2 and is engaged it is considered assigned to construction.	No. The Tug Boat needs to be on site and available at all times. Trips to and from WF1 to WF2 would be considered off site.
8	182	Drawings PH006/7/8 shows the PH2 areas available in Phase 1. However the given area is not enough to have the combi wall done as the stone columns/rigid inclusions, the deadmen sheeting and outfalls need to be completed to achieve MS1 Flood Wall completion. Can you please clarify?	MS1 has been deleted. Refer to Addendum 6, Article 3
8	183	Drawings PH009/10 shows the PH2 areas with the comboi flood wall but the area is not available in PH1. How can MS1 Flood Wall can be completed? Can you please clarify?	MS1 has been deleted. Refer to Addendum 6, Article 3.
8	184	Drawings PH006/7/8 shows the PH2 area second closure available in Phase 1 as 2/1/2023. The milestone 1 early completion date for incentive is June 2. This leaves us 4 months to complete demo, sewer, stone columns/rigid inclusions (with curing/testing), deadmen sheeting and combi wall with anchor ties, and 2 outfalls. Can you please review and revise MS 1 date for incentive and/or closure time frame?	MS1 has been deleted. Refer to Addendum 6, Article 3.

Addendum	Addendum Question No.	Bidder's Question	Response
8	185	REDACTED	
8	186	Specification Section ESCR-7.13 WF-1 States that the Facility is to be capable of accepting all Materials, Equipment and Items related to the project for Inspection, Transfer, and Transportation to and from the Project Site. Is the contractor required to transport all materials to and from the Project Site through this Facility?	No.

Addendum	Addendum Question No.	Bidder's Question	Response
9	1	Please provide the contractor with as-builts for: existing pedestrian bridges, waterfront structures, tennis building, track building, etc.	Refer to revised drawing G018 in Addendum 9, Article 4. Material added to Appendix A is attached to Addendum 9.
9	2	Will the removal of the Historic "Concrete" bulkhead be paid under ESCR-6.27 TC?	Drawing WS160 has been revised. Refer to Addendum 9, Article 4. The partial removal of the historic concrete bulkhead for deadman installation is paid under ESCR-6.27 S. For predrilling through historic concrete bulkhead for floodwall installation, use pay item ESCR-552.11 20CB. Refer to Addendum 9, Article 2 for the current bid schedule.
9	3	Cross Section J-1 on sheet no 900 of 2791 (WS6727) refers to the 24" Diameter rock socket to be paid for under Bid Item ESCR-551.24.05RS but when you go to the Platform Detail sheet nos 1002, 1006, 1011 and 1016 of 2791 (WS850, WS860, WS870 & WS800) the various cross sections indicate that this rock socket is to be paid for under Bid Item ESCR-551.30.05RS. Please clarify as to which bid item this 24" Diameter rock socket is to be paid under.	The rock sockets shown on drawings WS850, WS860, WS870, and WS880 are to be paid under item ESCR-551.30.01 RS. Drawing WS627 has been revised. Refer to Addendum 9, Article 4.
9	4	Please add missing pay item PK-ESCR 1190	Drawing BD207A has been revised to remove reference to item PK-ESCR 1190. Item is not in bid schedule. Refer to Addendum 9, Article 4.
9	5	We did not see anywhere within the contract drawings that shows where Current Bid Item 456 ESCR-551.993.1200 12 IN O.D. X 0.54 IN WALL THICKNESS MICROPILE is used. Please clarify	Item has been removed from the bid schedule. Refer to Addendum 9, Article 2.
9	6	We did not see anywhere within the contract drawings that shows where Current Bid Item 457 ESCR-551.993.1200C PILE LOAD TESTING FOR 12.00 IN O.D. X 0.54 IN WALL THICKNESS MICROPILE - STATIC COMPRESSION TEST is used. Please clarify	Item has been removed from the bid schedule. Refer to Addendum 9, Article 2.
9	7	We did not see anywhere within the contract drawings that shows where Current Bid Item 458 ESCR-551.993.1800 18 IN O.D. X 0.54 IN WALL THICKNESS MICROPILE is used. Please clarify	Item has been removed from the bid schedule. Refer to Addendum 9, Article 2.
9	8	We did not see anywhere within the contract drawings that shows where Current Bid Item 459 ESCR-551.993.1800C 18 IN O.D. X 0.54 IN WALL THICKNESS MICROPILE - STATIC COMPRESSION TEST is used. Please clarify	Item has been removed from the bid schedule. Refer to Addendum 9, Article 2.
9	9	Please refer to the 'Gas Cost Saving Specification' Section (EP-7) located in Volume 3 in this section there is reference made to "UTL-GCS-2W S - GAS INTERFERENCES AND ACCOMMODATIONS" (F.S. Fixed Sum) which is not currently part of the bid 'Bid Schedule' please confirm if this will be added or if was added in error.	Item has been added. Refer to Addendum 9, Article 2 for the current bid schedule.

Addendum	Addendum Question No.	Bidder's Question	Response
9	10	Please clarify that the turbidity curtain requirements denoted in ESCR 6.20.5, E are to be applied to Specification Section ESCR 6.27.4, H as well.	Contractor must install turbidity curtains to meet requirements as specified in contract specifications and permits. The USACE permit (refer to the S-Pages) requires that turbidity curtains will be installed in the East River prior to demolition of the East River bulkhead and esplanade in order to contain debris and turbidity. As noted in response to PBQ 11 below, contractors should be advised that there may be additional conditions attached to the forthcoming NYSDEC Section 401 Water Quality Certification or waiver.
9	11	Please make available to the bidders the USACE permit referenced in Article B15, US Army Corps of Engineers Requirements. As the Owner is aware, the requirements outlined by the USACE can change from those applied for and would in turn create impacts to the bidder's pricing/scope.	DDC submitted a Joint Permit Application to USACE and DEC. In response to the application, USACE issued a provisional permit (3/12/2020), refer to the S-Pages. The USACE provisional permit is conditional on receipt of the NYSDEC Section 401 Water Quality Certification or waiver, which has not yet been received. The contractors are advised that there may be additional conditions attached to the forthcoming NYSDEC water Quality Certificate which must be adhered to. DDC and NYC Parks followed up with NYSDEC in late August regarding the status of the permit determination and are still awaiting a response.
9	12	Will the contractor be allowed to subsitute resin instead of zinc in the sockets if they can prove it meets or exceeds the requirements?	Proposals for alternate socket types will be entertained as part of a VECP per the requirements of the S-Pages.
9	13	All the details for the park catch basins and manholes (DWG PUD706 & City of NY Parks & Recreations Sheet No.2), show brick masonry around the structures. However, for item PK-ESCR 691 (Brick/Precast for drain Structure) the specifications clearly say, "Brick Masonry drainage structures shall not be permitted for this contract". Please clarify, will the bricks be used according to the details or will it not be used according to the specifications.	Specification has been revised, refer to Addendum 6, Article 3.
9	14	Drawings PCS-304 show Launching and Receiving Pits. Please provide pay items for the components of this work.	Cost included under item ESCR 50.61C42D66. See revised drawing PCS304. Refer to Addendum 9, Article 4.
9	15	There are 3 Clear and Grub Items. Kindly clarify what work ESCR 6.01AC and PK ESCR 190 refer to.	Item PK-ESCR 190 has been removed. Refer to Addendum 9, Article 2 for the current bid schedule. Item 6.01 AC is used to clear along the flood wall alignment as shown on the plans and along the East River Housing parking lot. Item ESCR 6.01 AB is used to clear large areas of existing park as shown on the park demolition drawings and respective specifications.
9	16	Comfort Building : There is no info on arch drawings with regards to Finish on the roof. Structural drawings is referring to arch drawings for Finish on the roof but there is no info available on the arch drawings. Can you please clarify?	Roof type shall be RS-01 Fluid Applied Membrane Roofing (Specification section 07 55 56). See revised drawings A-750.00 to A-752.00. Refer to Addendum 9, Article 4.
9	17	Please provide the dwg for pay item 6.34 AB Chain Link Fence 4' High	Item 6.34 AB has been deleted. Refer to Addendum 9, Article 2.
9	18	Please provide the dwg for pay item 6.34 ACTP Temporary chain link fence 6' high (with top and bottom rail and posts mounted to the steel plates)	Item 6.34 ACTP has been deleted. Refer to Addendum 9, Article 2 for the current bid schedule.
9	19	Please provide the dwg for pay item 6.34 AD Chain Link Fence 8' high	Drawings with item 6.34 AD include FG138. Refer to Addendum 9, Article 4.

Addendum	Addendum Question No.	Bidder's Question	Response
9	20	Plese provide the drwg for pay item 6.34 BD Chain Link Fence Gate for 8' High Fence	Drawings with item 6.34 BD include FG138. Refer to Addendum 9, Article 4.
9	21	Please provide the dwg for pay item PK-ESCR 712 Chain Link Fence 8' HT ?	Item PK-ESCR 712 has been removed. Refer to Addendum 9, Article 2. Use item PK-305. See details 1-19, page 29 of the standard NYC Parks details.
9	22	Please provide the dwg for pay item PK_ESCR 802 A Steel Fence W Climbing Protection 6' HT ?	See Detail 1 on revised drawing LD830 and revised drawing LM525. Refer to Addendum 9, Article 4.
9	23	Please provide the dwg for pay item PK-ESCR 941 Galvanized Steel Chain Link Fence 4'HT?	Drawings with item PK-ESCR 941 include LD830, on Detail 10. The current version of LD830 is included in Addendum 9, Article 4.
9	24	RE: Drawing PDP 107, note9. We cannot locate payment Item 6.01AB. Kindly identify.	Payment for "Clearing and Grubbing" is under Item ESCR 6.01 AB.
9	25	We could not locate plan or schedule for furnish and install of permanent signs. Please clarify bid items below and their location. These items seem redundant if all sign work is supposed to be paid under "6.25 RS Temporary Signs" or "6.70 - MPT". a. 6.82 A REMOVING EXISTING TRAFFIC AND STREET NAME SIGNS	See revised notes on drawings LLP500, LLP503, LLP508, BC174, BD207, BD207A, and BT197. Refer to Addendum 9, Article 4.
9	26	We could not locate plan or schedule for furnish and install of permanent signs. Please clarify bid items below and their location. These items seem redundant if all sign work is supposed to be paid under "6.25 RS Temporary Signs" or "6.70 - MPT". b. 6.82 B REMOVING EXISTING TRAFFIC AND STREET NAME SIGN POSTS	See revised notes on drawings LLP500, LLP503, LLP508, BC174, BD207, BD207A, and BT197. Refer to Addendum 9, Article 4.
9	27	We could not locate plan or schedule for furnish and install of permanent signs. Please clarify bid items below and their location. These items seem redundant if all sign work is supposed to be paid under "6.25 RS Temporary Signs" or "6.70 - MPT". c. 6.83 AA FURNISHING NEW NON-REFLECTORIZED TRAFFIC SIGNS	See revised notes on drawings LLP500, LLP503, LLP508, BC174, BD207, BD207A, and BT197. Refer to Addendum 9, Article 4.
9	28	We could not locate plan or schedule for furnish and install of permanent signs. Please clarify bid items below and their location. These items seem redundant if all sign work is supposed to be paid under "6.25 RS Temporary Signs" or "6.70 - MPT". d. 6.83 AB FURNISHING NEW TRAFFIC SIGN POSTS	See revised notes on drawings LLP500, LLP503, LLP508, BC174, BD207, BD207A, and BT197. Refer to Addendum 9, Article 4.
9	29	We could not locate plan or schedule for furnish and install of permanent signs. Please clarify bid items below and their location. These items seem redundant if all sign work is supposed to be paid under "6.25 RS Temporary Signs" or "6.70 - MPT". e. 6.83 AR FURNISHING NEW REFLECTORIZED TRAFFIC SIGNS	See revised notes on drawings LLP500, LLP503, LLP508, BC174, BD207, BD207A, and BT197. Refer to Addendum 9, Article 4.

Addendum	Addendum Question No.	Bidder's Question	Response
9	30	We could not locate plan or schedule for furnish and install of permanent signs. Please clarify bid items below and their location. These items seem redundant if all sign work is supposed to be paid under “6.25 RS Temporary Signs” or “6.70 - MPT”. f. 6.83 BA INSTALLING TRAFFIC SIGNS	See revised notes on drawings LLP500, LLP503, LLP508, BC174, BD207, BD207A, and BT197. Refer to Addendum 9, Article 4.
9	31	We could not locate plan or schedule for furnish and install of permanent signs. Please clarify bid items below and their location. These items seem redundant if all sign work is supposed to be paid under “6.25 RS Temporary Signs” or “6.70 - MPT”. g. 6.83 BB INSTALLING TRAFFIC SIGN POSTS	See revised notes on drawings LLP500, LLP503, LLP508, BC174, BD207, BD207A, and BT197. Refer to Addendum 9, Article 4.
9	32	We could not locate plan or schedule for furnish and install of permanent signs. Please clarify bid items below and their location. These items seem redundant if all sign work is supposed to be paid under “6.25 RS Temporary Signs” or “6.70 - MPT”. h. 6.86 AA FURNISHING NEW STREET NAME SIGNS	See revised notes on drawings LLP500, LLP503, LLP508, BC174, BD207, BD207A, and BT197. Refer to Addendum 9, Article 4.
9	33	We could not locate plan or schedule for furnish and install of permanent signs. Please clarify bid items below and their location. These items seem redundant if all sign work is supposed to be paid under “6.25 RS Temporary Signs” or “6.70 - MPT”. i. 6.86 AB FURNISHING NEW STREET NAME SIGN POSTS	See revised notes on drawings LLP500, LLP503, LLP508, BC174, BD207, BD207A, and BT197. Refer to Addendum 9, Article 4.
9	34	We could not locate plan or schedule for furnish and install of permanent signs. Please clarify bid items below and their location. These items seem redundant if all sign work is supposed to be paid under “6.25 RS Temporary Signs” or “6.70 - MPT”. j. 6.86 BA INSTALLING STREET NAME SIGNS	See revised notes on drawings LLP500, LLP503, LLP508, BC174, BD207, BD207A, and BT197. Refer to Addendum 9, Article 4.
9	35	We could not locate plan or schedule for furnish and install of permanent signs. Please clarify bid items below and their location. These items seem redundant if all sign work is supposed to be paid under “6.25 RS Temporary Signs” or “6.70 - MPT”. k. 6.86 BB INSTALLING STREET NAME SIGN POSTS	See revised notes on drawings LLP500, LLP503, LLP508, BC174, BD207, BD207A, and BT197. Refer to Addendum 9, Article 4.
9	36	Please clarify payment for the temporary signs used for the “Greenway Rerouting Plan” (Dwg TC 102/Sheet 2652. Notes state signs should be paid under item “ESCR 6.25 GS Install Temp. Signs Greenway Reroute Plan” and “ESCR 6.25 GSX Remove Temp. Signs Greenway Reroute Plan” but bid items do not exist.	Follow Note 4 on drawing TC102. Greenway rerouting signs are paid under item 6.70. The current version of TC102 is in included in Addendum 2, Article 2.
9	37	Please provide pile detail under chambers 51.11C0110A and 51.11C0110B on drawing BT195.	Drawings BT195, BT203 and BT204 have been revised. Refer to Addendum 9, Article 4.
9	38	Pay Item PK-ESCR 937 D (9,463 CY) is indicated as NIC in drawing LSL-700 (sheet 1734). Please clarify.	Details identified as NIC are not in SANDRESM1 contract. Pay item PK-ESCR 937 D is included in other details, locations, and conditions and is included in SANDRESM1 contract.

Addendum	Addendum Question No.	Bidder's Question	Response
9	39	Referencing Corlears Hook Bridge, Sheet 117 of 2791, Section (Typical Deck) shows 1"x1" Chain Link Fencing (Item No. NYC-607.064 AD). We do not see this item on the Bid Schedule Form. Please clarify.	Item number is NYC180002. Drawing BC107 has been revised. Refer to Addendum 9, Article 4.
9	40	Sht 2069/drawing PUE 308 calls for 4 Water Play Activator Bollards that will be paid under item PK-ESCR 618. Details of the system can be found on sheet PUP 321/ PG 2162. The pay item is not in the bid item list, please clarify.	Item PK-ESCR 618 has been added. Refer to Addendum 9, Article 2 for the current bid schedule.
9	41	Please clarify the location of Bid Items 4.04AC,4.05A and 4.05BX for concrete pavement.	Drawings with item 4.05 BX include BT199. Item 4.04 AC is now only included in the Con Edison scope (refer to the JB-Pages) and 4.05 A has been deleted from the bid schedule.
9	42	Please clarify the location of Bid Items 4.01RAE,4.02AB-R&4.02CB for Asphalt Pavement.	Item 4.02 CB is for temporary trench restoration per NYCDOT Standard Drawings H-1053 and H-1054 and drawing FG245. Drawings with item 4.02 AB-R include FG245. Item 4.01 RAE has been deleted from the bid schedule. Refer to Addendum 9, Article 2.
9	43	Please issue all historic borings as shown on the contract documents and final subsurface investigation reports.	Refer to revised drawing G018 in Addendum 9, Article 4. Material added to Appendix A is attached to Addendum 9.
9	44	Volume 1 of 3 Bid Booklet: ESCR-552.11 38 CW, PK-667, PK-ESCR 646. These items are located in the contract bid schedule but not in Contract Drawings. Please provide direction.	ESCR-552.11 38 CW has been removed. Refer to Addendum 9, Article 2 for the current bid schedule. Drawings with item PK-667 include PUD001-PUD003. Drawings with item PK-ESCR 646 include PUP302, PUP305, and PUP307.
9	45	Will the Department of Buildings have jurisdiction for this project and what NYCDOB requirements are attached to this contract?	NYCDOB/SBS will monitor or be responsible for all work types filed with them including, but not limited to, the site work, bulkhead work, landscaping, grading, etc.
9	46	Vol. 3 of 3; page S-70 states Special Inspections by the NYCDOB. What inspections are required by the NYCDOB?	Inspections will be performed based on work type. All applicable NYCDOB and SBS requirements will apply.
9	47	Vol. 3 of 3; page S-73 states NYC Department of Buildings will continue to enforce the NYC Building Codes and approve building permit applications. Will the responsibility of the NYCDOB only adhere to the construction of the proposed buildings?	NYCDOB/SBS will monitor or be responsible for all work types filed with them including but not limited to the site work, bulkhead work, landscaping, grading, etc.
9	48	The owner has provided pay items ESCR-2.AO, ESCR-2.FDO, and ESCR-2.GCO for jet grouting obstructions. Will other ground improvements and foundation items receive obstruction pay items?	New specification Section ESCR 203 and new items ESCR-203.12 PVD and ESCR-203.99 DSM have been added. Drawings SM305 to SM309 have been revised. Refer to Addendum 9, Article 2; Addendum 9, Article 4; and Addendum 9, Article 3.

Addendum	Addendum Question No.	Bidder's Question	Response
9	49	Vol.3 of 3; Specification 5.1-Rigid inclusions has conflicting information. Initially all the cost for obstruction drilling is on the contractor (FW-94). (FW-100) states the contractor will be paid for abandoned rigid inclusions for obstructions. (FW-101) Removal of obstruction shall be paid under the obstruction rate. (FW-105 and FW-106) provide obstruction payments and bid item for Obstruction Removal for Rigid Inclusions. Please clarify	See revised specification section ESCR 5.1 for details to address obstructions. Refer to Addendum 9, Article 3.
9	50	Vol. 3 of 3; ESCR 552-Steel Sheet piling requires predrilling for the waterfront structure and the floodwall piling. The contractor is also expected to remove any bulkhead that interferes with the floodwall. Will the contractor be paid under ESCR-6.27 TC for removal of timber cribbing rock-filled bulkhead, when piles encounter obstructions? Contract drawings state the contractor should anticipate predrilling for 30% of the cutoff, before installation. Does that factor apply to the entire cutoff wall?	The assumed 30% predrilling is for piles along the waterfront, not in locations of timber cribbing. Refer to WS110 series for where the predrilling factors apply. Any elements of the existing bulkhead that need to be removed are part of the corresponding esplanade type demolition numbers shown on WS140-WS149. Contractor shall assume 100% predrilling when timber cribbing is shown (VIF) within the park to install floodwall. Work to install piles in timber cribbing is entirely covered by the pile installation numbers. ESCR-6.27 TC is only used for partial demolition of the timber cribbing for tie rod or deadman installation and is shown on WS162.
9	51	Waterfront structure demolition and construction plans/details do not show existing rip rap in between existing timber piles. Addendum #03 as-builts clearly note rip-rap was placed. Will the rip -rap need to be removed prior to installation of the proposed cutoff wall. Was any rip rap removed during the 2004 - Reconstruction of Bulkheads and Relieving Platforms project? What pay item is associated with rip rap removal.	The 1940 drawing shows rip rap. However it is not certain if this was a design or an as-built document. Also the 2012 era as-builts, along with our inspections, observations and geotechnical investigations do not indicate the existence of any riprap beneath the platform. This, however, does not mean it does not exist. It may simply be covered by river sediments. Due to this uncertainty, a pay item will not be provided specifically for rip rap removal. The contractor shall cover the costs to remove what ever material may be found within the current items provided in the contract.

Addendum	Addendum Question No.	Bidder's Question	Response
9	52	Reference: Houston Street Bridge, Drawings BH117, 119 & 120, Sheets 514, 516 & 517, Walls W10, W11, and W12 Sections B1/BH117, B2/BH117 and C/BH117. As per Drawing BH117, Section B shows work from STA. H104+04 to H107+37.11 and STA. H108+27.11 to H113+19 (Walls W7, W8, W9, W12, W13, W14, W15W16, W17) and Section C shows work from STA. H107+11 to H108+27.11 (Wall W11). a) On Drawing BH119, Wall W10, are shown sections B1/BH117 and B2/BH117 and on these sections, parapet is shown above top of grade, as continuation of 1'-0" structural wall. However, parapet is not shown on Drawing BH119 (Wall W10) and in continuation on Drawing BH120, (Wall W11) is shown Section C/BH117 (STA. H107+37.11 to H108+27.11) without parapet and top of wall and top of grade are the same. Please clarify. b) On Drawing BH120, Wall W12, in first +/-46'-0" of wall length from STA. 108+27.11 is shown section B/BH117, including Top of Grade and Top of Wall and Top of Parapet is not shown. Top of parapet is shown after Match Line G-G. Per Section B/BH117, parapet is shown above top of grade, as continuation of 1'-0" structural wall. Please clarify.	a) For sections B1 and B2 on BH117, parapet details were removed in accordance with "Detail 1" on BH102 and wall W10 on BH119. For wall W11 on BH120, top of proposed grade and top of wall are the same as they meet the elevation of the existing Houston Street Bridge. Stationing limits for B1 and B2 have been provided. Note 5 has been added to BH 101 to clarify the non-parapet limits. Refer to Addendum 9, Article 4. b) For this portion of the wall W12, see "Detail 1" on BH102, which applies to STA. H106+68.11 to H107+37.11 and H108+27.11 to H108+79.18. Refer to Addendum 7, Article 2.
9	53	Reference: Houston Street Bridge, Drawings BH102, BH119, Sheets 499, 516 , Walls W10 and W12, Detail 1/BH102, Sections B/BH117 and B2/BH117. Detail 1/BH102 B shows work from STA. H106+68.11 to H107+37.11 (Wall W10) and STA. H108+27.11 to H108+79.18 (Wall W12). However, on Drawing BH119, at Wall W10 are shown Sections B1/BH117 and B2/BH117, and at Wall W12 is shown Section B/BH117. a) Start and End Stations of wall W10 and work shown on Detail 1/BH102 does not show same work and stations shown on Sections B1 or B2. Please clarify if referenced Start and End wall stations are correct, why different Sections are shown, why parapet is shown on Section B/BH117 and not on Detail 1/BH102? b) Start and End Stations for Wall W12 are the same as on Section B/BH117 but work shown on Section B/BH117 and Detail 1/BH102 are not the same. Please clarify why parapet is shown on Section B/BH117 and not on Detail 1/BH102?	a) See response to PBQ 52 above. b) The parapet detail on section B on BH117 is marked as "varies". Therefore, this detail is consistent with stationing provided for "Detail 1" on BH102.
9	54	Reference: Houston Street Bridge, Drawing BH102, Section B/BH101, Detail 1. Texts on drawing BH102 and Proposed Section B/BH101 reads: "See Detail 1" and "2" premoulded joint filler at 68F (cost to be included under Item 569.03". Please clarify if Detail 1 2" Joint with elastomeric concrete header, provided on drawing BH117, is Detail 1 referenced on Section B/BH101 and A/BH101?	Detail 1 on BH117 is referenced to by Section C on BH103, as noted.

Addendum	Addendum Question No.	Bidder's Question	Response
9	55	Reference: Houston Street Bridge, Retaining Wall Elevation and Footing Plans, Drawings BH112 through BH116, Sheets 509 through 513, and Retaining Wall Reinforcement Details, Drawings BH118 through BH121, Sheets 515 through 518. A)Texts with arrow on Retaining Wall Reinforcement Details drawings, walls W12, W13, W14, W15, W16, W17, W18 and W19 reads: "Approx. Existing Grade". However, above referenced texts does not match Approx. Existing Grade shown on Retaining Wall Elevation and Footing Plans. Please clarify.(a)Approx. Existing Grade is not shown for Wall W6. Please provide missing information.	a) Refer to drawings BH112 through BH116 for location of approximate existing grade. Drawings BH118 through BH121 have been revised to show the correct location of approximate existing grade. Refer to Addendum 7, Article 2 and Addendum 9, Article 4. b) Approximate existing grade are provided for walls W5 and W6 on drawings BH112, BH113, BH118, and BH119.
9	56	Reference: Houston Street Bridge, Drawing BH110 & 102, Sheets 507 & 499. Note No. 2 on drawing BH110 reads: "For limits of Select Structural Fill, Item 203.21, refer to typical sections on drawings BH102 and BH103". Referenced sections does not show limits of Select Structural Fill. Please clarify.	Please see response to PBQ 84 below. Note 2 on drawing BH110 has been revised. Refer to Addendum 9, Article 4.
9	57	Reference: East 10th Street Staircase Reinforcement, Drawing BT158, Sheet 408. Note 2 on drawing BT158 reads: "See Drawing BT118-BT123 for adjoining West Ramp drawings and details". Deck reinforcing is not shown on Stair Reinforcement Section and not on above referenced West Ramp drawings. Please clarify.	Reinforcement is shown on revised drawing BT129. Refer to Addendum 9, Article 4.
9	58	Reference: Waterfront Esplanade, Drawings WS680 through WS683, Sheets 921 through 924. Note No. 2 on drawings WS680-WS682 and Note No. 1 on drawing WS683 reads: "Refer to sheet WS790-WS794 for top and bottom elevations of esplanade retaining wall". However, top elevations of retaining walls are shown on drawings WS790-WS794 but bottom elevations are not. Please clarify.	Drawings WS790 to WS794 have been revised to include Note 1 for bottom elevations. Refer to Addendum 9, Article 4.
9	59	Reference: Reference: Waterfront Esplanade Deck Typical Reinforcement Plans, Drawings WS530 through WS538, Sheets 863 through 872. Note No. 1 on drawings WS530-WS538 reads: "A partial deck plan is shown and is typical to all one (and/or two, and/or three) span units supported on three (and/or five, and/or six) girders … and/or five (nine) hollow slab units. Refer to sheets WS539A to sheets WS539H for partial plan locations". However, nothing has been shown on drawings WS539A-WS539H. Please clarify.	Drainage plans are shown no revised drawings WS539A through WS539H. Refer to Addendum 9, Article 4.

Addendum	Addendum Question No.	Bidder's Question	Response
9	60	Reference: Waterfront Esplanade, Waterproofing membrane. Per Addendum No. 3 drawings WS730 and WS731 Waterfront Esplanade Expansion Joint Details Sheet 1 and 2, are replaced with new drawings. Per new details waterproofing membrane has been deleted form Transverse Expansion Joint at Pile Caps between the Esplanade Spans details but is still shown on drawing WS761 Cut-off Wall Details Sheet 12 of 17 and on Waterfront Cross Sections (drawings WS600 to WS629). Please clarify and please confirm that bid item quantity of waterproofing membrane is correct?	Waterproofing is not specifically called out on the joint drawings. However, it is applied to the entire deck and the bid item is correct. Refer to drawing WS691B for waterproofing details. Drawings WS730, WS731, and WS761 have been revised to include reference to WS691B for waterproofing membrane details. Refer to Addendum 9, Article 4.
9	61	Reference: One Span Unit – AASHTO Beams – Girders, Drawings WS533 & WS682, Sheets 866 & 923. Per drawing WS533 Typical Partial Deck Reinforcing Plan for One Span Unit – AASHTO Beams – 5 Girders out to out deck width is 39'-1" including 10'-5" deck extension. Per drawing WS682 typical spacing for Type V beams and Type I beams is 6'-8". Deck extension of deck with five (5) AASHTO Type I Beam Girders is 10'-5" and out to out deck width is 39'-1". However, per drawing WS682, deck extension of deck with five (5) AASHTO Type V Beam Girders is 9'-2" and out to out deck width is +/-37'-9". Please clarify if deck extensions shown on drawing WS682 are correct and if out to out deck widths for deck with Type V and I Beam Girders should be the same?	9'-2" was corrected to 10'-5" on drawing WS682 in Addendum 5, Article 3. Out-to-out deck width shall be the same for Type 5 and Type 1 girders.
9	62	Reference: Two Span Unit and Three Span Unit– AASHTO Beams – Girders, Drawings WS534, WS535 & WS682, Sheets 867, 868 & 923. Per drawing WS534 and WS535 Typical Partial Deck Reinforcing Plan for Two and Three Span Unit – AASHTO Beams – 5 Girders out to out deck width is 39'-1" including 10'-5" deck extension. However, per drawing WS682, deck extension of deck with five (5) AASHTO Type V Beam Girders is 9'-2" and out to out deck width is +/-37'-9".Please clarify if deck extension shown on drawing WS682 is correct and what is correct out to out deck widths for two and three span unit deck with five (5) Type V Beam Girders?	9'-2" was corrected to 10'-5" on drawing WS682 in Addendum 5, Article 3. 39'-1" is correct width out-to-out for the (5) Type V Beam Girders.
9	63	Reference: Drawing WS761 Cut-off Wall Details Sheet 12 of 17 Detail No. 2, on Drawing WS761 shows waterproofing membrane installed on face of proposed pile cap. Please clarify is this is correct and provide vertical installation limits of waterproofing membrane?	Drawing WS761 is correct in showing the waterproofing membrane installed on the face of the proposed pile cap. The latest version of the drawing references further detail on drawing WS691B. Drawing WS691B has been revised to show vertical installation limits. Refer to Addendum 9, Article 4.

Addendum	Addendum Question No.	Bidder's Question	Response
9	64	Reference: Drawing WS761 Cut-off Wall Details Sheet 12 of 17.Per Drawing WS761, DetailsNo. 2 and No.3, payment for 6”x14”x1” stainless steel bent plate, 6”x1” PTFE plate attached to deck, stainless steel epoxy anchors, 12”x1” stainless steel plate with 7/8” anchor studs is to be included under Item No. 565.14200008 NON-GUIDED POLYTETRAFLUORETHYLENE (PTFE) SLIDING BEARING. However, on Waterfront Cross Sections, drawings WS611, WS612, WS613, WS614, WS615, WS616, WS621, WS624, WS625, WS626, WS627 payment is to be made under Item No. ESCR—567. LG. Please clarify?	Drawings WS611 to WS616, WS621, and WS624 to WS627 have been revised to show item no. 565.14200008 for this type of sliding joint. Refer to Addendum 9, Article 4.
9	65	Please provide pay item 551.30 RS for 24" rock sockets at L-Wall locations	The rock sockets shown on drawings WS850, WS860, WS870, and WS880 are to be paid under item ESCR-551.30.01 RS.
9	66	Please define limits of interlock sealant for Flood Wall. Is it the intent to provide a interlock sealant for the entire floodwall?	The interlock sealant extents are shown on drawings WS305 through WS307. The interlock sealant is only required in parts of Reach H and Reach I & J.
9	67	Sheet 1025; Please define locations for Piers 13A,13B, 13C, 14D, 14C, 14B, and 14A.	Drawing WS903 has been revised to show stationing and include correct pile designations matching drawing WS810 to WS818. Refer to Addendum 9, Article 4.
9	68	As described in Note 7; Sheet 1024. What sequence does the contractor follow for installation of anodes in the proposed embayment area	Note 5 on drawing WS900 has been revised to address order of preference for installation of anodes at the proposed platforms. Refer to Addendum 9, Article 4.
9	69	Sheet 1024; Bonding rod weld detail pipe cutoff wall. Does this state to weld a 3/8 bonding rod at every interlock for 36" combo wall.	Yes, the 3/8" bonding rod is applied at every interlock for the 36" continuous pipe pile wall. The adjacent detail for "SEAM WELD BONDING" is for the combi-wall. Note 7 has been added to drawing WS902 to allow for alternative methods as approved by Engineer. Refer to Addendum 9, Article 4.
9	70	Sheet 1024; 3/8 x 2" bonding strap. Is this strap flat braided? Are there any specifications for the 3/8 x 2" banded strap?	No, the 3/8"x 2" bonding strap is a solid steel flat bar.
9	71	Sheet 1025; Please define locations for Piers 98A, 98B, 98C, 98D, 99D, 99C, 99B, and 99A	Drawing WS903 has been revised to show stationing and include correct pile designations matching drawing WS810 to WS818. Refer to Addendum 9, Article 4.
9	72	What is the design load (psf) for the pedestrian traffic on the Temporary Corlears Hook Bridge? Also, specify if the temporary bridge is to be outfitted with handrails or not.	Section ESCR-HW-901 has been revised. Refer to Addendum 9, Article 3.
9	73	As described in Note 7; Sheet 1024. What sequence does the contractor follow for installation of anodes on existing 3 pile piers	Note 5 on drawing WS900 has been revised to address order of preference for installation of anodes at all piers, including 3 pile piers. Refer to Addendum 9, Article 4.
9	74	As described in Note 7; Sheet 1024. What sequence does the contractor follow for installation of anodes on proposed 6 pile piers	Note 5 on drawing WS900 has been revised to address order of preference for installation of anodes at all piers, including 6 pile piers. Refer to Addendum 9, Article 4.

Addendum	Addendum Question No.	Bidder's Question	Response
9	75	Please indicate if the abutments are to be considered “Mass Concrete,” for the Corlears Hook Bridge.	Abutment stem walls are mass concrete.
9	76	There are two callouts on Sheet BC119, in Details “B” and “D” for Bid Item 555.02000001. Please confirm if this should be 555.09.	Foundation concrete is paid under item no. 555.08. The abutment stem is paid under item 555.02000001.
9	77	Please indicate which Bid Item the approach slabs are paid under for the Corlears Hook Bridge, as displayed on Sheet BC149.	Item 557.2001 is for approach slabs
9	78	Please indicate which Bid Item the concrete wall will be paid for according to Sheet BC119A, Detail A.	Item 555.09
9	79	Please indicate what types of reinforcing bars are required according to Sheet BC119A, Detail A.	Epoxy coated reinforcing bars, item 556.0202
9	80	Please indicate what pay item the parapets across the bridge will be paid under in accordance with Sheet BC140, Detail C.	Item 569.03
9	81	Please Reference excavation limits given on Sheet BC110 in regard to Bid Item 206.01. The excavation limits only account for the removal of the existing West Abutment and West Wing Walls. Please provide excavation limits for the proposed Southwest Wing Wall, as well as the proposed retaining wall.	Drawings BC110 and BC111 have been revised. Refer to Addendum 9, Article 4.
9	82	Please Reference excavation limits given on Sheet BC110 in regard to Bid Item 206.01. In order to remove the existing East Abutment, it will be necessary to excavate the surrounding area. Please confirm that this excavation will be paid for under Bid Item 206.01. If this work is to be paid under Bid Item 206.01, please provide excavation limits for the abutment and wing walls.	Pay item 206.01 shall be usedfor this excavation. Drawings BC110 and BC111 have been revised to show excavation limits. See drawing BC119A for retaining wall excavation limits. Refer to Addendum 9, Article 4.
9	83	This contract calls for Bid Item 619.70040011, as shown on Sheets BD100 and BT100. This bid item does not appear in the NYSDOT Standard Specifications. Please provide the correct bid item number for temporary protective shielding.	Refer to Addendum 6, Article 3.
9	84	Reference is made to Bid Item 203.12 for the Houston Street Bridge, as indicated on Sheet BH109. This structural fill is called out as fill to be placed within the excavated area as defined by the horizontal limits displayed on this sheet. Due to the vertical raising of this ramp, please indicate if this bid item is to be utilized as backfill for the ramp itself. Please provide vertical limits of the proposed backfill for this ramp.	The select structural fill has been replaced with backfill item ESCR-4.11 CA. Drawings BH109 and BH110 have been revised. The SM series drawings show fill limits above existing grade. Select fill callouts on drawing BH102 and BH103 have been removed. Refer to Addendum 9, Article 4.
9	85	Please reference Bid Item 557.0101. This bid item does not appear in any of the drawings. Please indicate what this bid item pertains to.	Deck slab is accounted for in item 557.0109. Item 557.0101 has been removed. Refer to Addendum 9, Article 2
9	86	Please reference Bid Item 559.90010011. This bid item does not appear in any of the drawings. Please indicate what this bid item pertains to.	Please see revised Construction Note 1 on drawings BD001 and BT001. Refer to Addendum 9, Article, DR.
9	87	Please reference Bid Item 564.0503. This bid item does not appear in any of the drawings. Please indicate what this bid item pertains to.	Item 564.0503 has been removed from the bid schedule. Refer to Addendum 9, Article 2.

Addendum	Addendum Question No.	Bidder's Question	Response
9	88	Please reference Bid Item 203.20. Please confirm if this bid item is utilized only at the East Abutment at the Delancey Street Pedestrian Bridge and the East 10th Street Pedestrian Bridge, shown on Sheets BD130 and BT124 respectively.	Correct.
9	89	Please reference Bid Item 564.0502. The structural steel framing for the arch girder on the Corlears Hook Bridge was paid under this item, but the Delancey Street Bridge and East 10th Street bridge have the arch framing paid under 564.0501. Please indicate if this is correct, and please consider revising the bid quantities accordingly.	Please see responses to pre-bid questions 21 and 22 in Addendum 5, Article 4.
9	90	Please reference Bid Item ESCR-13.BRDG. The bid item quantity appears to be significantly too high for the areas given on sheets BT176, BT177, BD189, BD190, and BC155. Please indicate if this bid item is utilized anywhere else.	Item ESCR-13.BRDG is also used to identify the Architectural Concrete Textured Finishes along the Houston Street Retaining Wall as shown on drawings FW305 to FW306. Drawing FW001 has been revised to clarify the scope of the bid items associated with the Houston Street Retaining Wall. Refer to Addendum 9, Article 4.
9	91	Significant obstruction drilling will be required to install all the wick drains. Please provide a pay item for the obstruction drilling similar to the jet grouting items.	New specification Section ESCR 203 and new items ESCR-203.12 PVD and ESCR-203.99 DSM have been added. Drawings SM305 to SM309 have been revised. Refer to Addendum 9, Article 2; Addendum 9, Article 4; and Addendum 9, Article 3.
9	92	Drawing PCS304A, Secant Pile Construction, Note 4.1 requires "temporary casing to be installed using internal liquid fluid flush duplex drilling method." Please confirm conventional sectional steel casing and single rotary/kelly drilling methods will be considered acceptable for casing installation and soil excavation.	Alternative drilling methods will be considered during shop drawing review based on the contractor's SOE plan.
9	93	Drawing PCS304A, general note 4, references a geotechnical engineering report prepared by AKRF. Please provide the referenced geotechnical report.	Refer to revised drawing G018 in Addendum 9, Article 4. Material added to Appendix A is attached to Addendum 9.
9	94	Please provide the tieback anchor design loads for anchors at both the Microtunnel Launch and Receiving Pits at East 10th Street.	Design load is 80 kips. See general note 3.2 on drawing PCS304A under tie back anchor testing for more details.
9	95	Sheet 484 references #11 grade 75 bar for the tieback anchors. It is normal construction practice to utilize grade 150 bar for tieback anchors. Please confirm the size and grade of the tieback anchor denoted is correct.	It is designed for a grade 75 bar. Drawing PCS304A (sheet 484) reference is correct.
9	96	There are existing utilities nearby to the excavations for the Launch and Receiving Pits at East 10th Street. Please reconsider and/or confirm the angle of installation for the tieback anchors to avoid impacts.	Contractor's tiebacks are intended to be installed below any existing utilities.

Addendum	Addendum Question No.	Bidder's Question	Response
9	97	Sheet 623; Record Borings; Boring P1A-1 shows hard to very hard schist at elevation -8 to -8.5. This areas requires A46 steel sheeting to be installed only using the press in method. Please provide guidance on how the contractor will install sheeting through rock, only using the press application.	The press-in method for installing the sheet piling was specified to minimize the vibrations and noise generated from the installation process, such that the work does not affect nearby structures and utilities. Special measures (such as driving shoes, auguring, water jetting, etc.) are available when encountering obstructions or difficult driving conditions. Contractor shall refer to specification Section ESCR-552 and evaluate options as appropriate.
9	98	"Discrepancy noted for pay item number ESCR 4.25 RW – recovery well installation – between specifications descriptions and Bid Schedule Form: • Bid schedule form gives description of “recovery well installed to 35 feet below grade” for this pay item (see seq. no. 0428 on page B-58) • Specifications, volume 3, gives of “recovery well installed to 60 feet below grade” for this pay item (see page HAZ-10 of volume 3 of specifications) We are therefore requesting confirmations of the appropriate description for pay item ESCR 4.25 RW – should it be “35 feet below grade” or “60 feet below grade”?"	Item ESCR-4.25 RW has been replaced with ESCR-4.25 RW60 with the description "RECOVERY WELL INSTALLED TO 60 FEET BELOW GRADE". Refer to Addendum 9, Article 2.
9	99	Please provide locations of item 70.11TT- Timber Piles (Treated).	Item 70.11TT has been removed. Refer to Addendum 9, Article 2 for the current bid schedule.
9	100	Reference: Waterfront Esplanade, Miscellaneous Pile Cap Details, Sheet 2 of 2, Drawing WS514, Sheet 854. Note at Backwall Section for Pier Type A reads: “#6 @ 6” embedded 2’-0” into pile cap with HILTI HIT-RE 500 V3 epoxy (Typ.) Item No. 565.0201.” This item is not part of the bid breakdown. Please clarify.	Drawing WS514 has been revised to include the correct item 586.0201 for this work. Refer to Addendum 9, Article 4.
9	101	Reference: Waterfront Esplanade, Miscellaneous Pile Cap Details, Sheet 2 of 2, Drawing WS514, Sheet 854, Typical Sections, Sheet 1 of 8, Drawing WS660, Sheet 913, and Structural Elevation, Sheet 1 of 12, Drawing WS450, Sheet 836. As per Drawing WS514 and WS660, thickness of proposed conc. deck slab at Pier Type A is 9” min. or 10”. However, per Drawing WS450 thickness of proposed conc. deck slab at Pier Type A is 6”. Please clarify.	Deck callout has been revised on drawings WS450, WS451, and WS452. Refer to Addendum 9, Article 4
9	102	Please provide as built plans for the existing Amphitheater Building.	The list of Appendix A materials referenced on drawing G018 has been updated. Refer to Addendum 9, Article 4. New materials are provided with Addendum 9.
9	103	On sheet 1429 there is a portion of the existing Williamsburg Bridge West security bollards indicated to remain “Protect existing bollards and foundation to remain along west side of bridge piers” this contradicts what is shown on sheet 2200 which shows all of the existing bollards be demolished. Please advise which plans are to be followed.	Drawing PDD109 (sheet 1429) covers Reach J and shows the demolition of existing park drainage and sanitary structures. The Williamsburg Bridge is in Reach E. This drawing does not show any Williamsburg Bridge bollards.

Addendum	Addendum Question No.	Bidder's Question	Response
9	104	Please refer to sheet 2201 on this sheet it indicates that the removal of the existing Bar Picket Fence is to be paid under Pay item ESCR-6.27 S but this Payitem is not part of the bid there is however a Payitem 6.18 X “Picket Fence Removed”. Please confirm if the removal of any Picket Fence on the project is to be included in this item.	Drawing SB101 has been revised to replace the reference to item ESCR-6.27 S with item 6.18 X. Refer to Addendum, 9, Article 4.
9	105	Please provide the flow rates during a storm event for each of the existing DEP NFM Outfalls within River Side Park so that proper By-Pass pumping systems can be designed.	Flow rates are not available.
9	106	Where are Pay Items 564.0503, 585.01 and ESCR-564 located in the contract drawings?	Items 564.0503 and 585.01 have been deleted. Refer to Addendum 9, Article 2. ESCR-564 is used for the deadman wale system, as shown on drawings WS600 to WS626.
9	107	"According to the specifications, ""the quantity of STONE VENEER TYPE 5B, STONE VENEER TYPE 5C, and STONE VENEER TYPE 5D to be paid for shall be the LINEAR FOOT furnished and installed complete, in accordance with the plans, specifications, and directions of the Engineer"". However, the bid schedule shows units in SQUARE FOOT. Please clarify which units these items will be paid for."	Correct unit of measure for bit items PK-ESCR 035 F, PK-ESCR 035 G, and PK-ESCR 035 H is SQUARE FOOT. Specification has been updated. Refer to Addendum 9, Article 3.
9	108	According to the specifcations and Drawing No. LD800 (or Sheet No. 1956), there is a call out for bid item number PK-ESCR 906 E. This bid item number is not mentioned in the bid item schedule. Please clarify the correct item number or add this new bid item to the schedule.	Refer to Addendum 9, Article 2 for the current bid schedule, which includes PK-ESCR 906 E.
9	109	According to the specifcations and Drawing No. LD774 (or Sheet No. 1945), there is a call out for bid item number PK-ESCR 035 D. This bid item number is not mentioned in the bid item schedule. Please clarify the correct item number or add this new bid item to the schedule.	Refer to Addendum 9, Article 2 for the current bid schedule, which includes PK-ESCR 035 D.
9	110	Please reference Bid Item 557.0109. Please indicate if the bridge deck concrete pours can be performed utilizing an air screed or a roller screed.	Either method is acceptable pending final Engineer's approval of contractor's submittal per specifications.
9	111	Please provide details for Pile Plugs at cutoff wall, we require tip elevations	Drawings WS758 to WS759 has been revised to include pile plug lengths. Refer to Addendum 9, Article 4.
9	112	Please provide the design loads for the existing Esplanade (Existing concrete pile cap, prestressed concrete slab units).	Refer to as-builts for design loads of existing esplanade structure which will be partially demolished. Drawing WS002 has been revised to include design criteria including loads and loading combinations for proposed esplanade work. Refer to Addendum 9, Article 4.
9	113	Please provide the lengths for the existing timber piles under the Esplanade which are to be removed.	All available records have been provided.

Addendum	Addendum Question No.	Bidder's Question	Response
9	114	The Aggregate Pier required minimum Area Replacement Ratio (ARR) of 16.7% is very high for large-area treatment. It will probably be difficult or impossible to install that much stone for a mass area treatment. Due to densification from the installation efforts and the high ARR, it may be difficult or impossible to reach the design depth and/or to achieve the design diameter on all columns installed. If there is no site heave resulting from the work, in order to install an ARR of 16.7% there would need to be an equal (16.7%) reduction in volume of the soil at the site. That is a lot of densification. Volume reduction from densification of more than 10% is extremely difficult. If the soil profile contains layers of saturated fine grained soils, their densification during construction will be limited (theoretically zero). For shallower soils (top 10 to 20 ft) a portion of the volume associated with the ARR will likely result in heaving of the ground surface of the site. As depth increases beyond about 20 ft, the increasing stress due to the weight of the overburden soils will make it progressively more difficult to penetrate granular soils with the vibrator and to build the desired column diameters. It is our position that a 16.7% ARR will be extremely difficult to construct as designed. i. Will smaller ARRs be accepted? ii. If depth refusal of vibrator achieved prematurely to reaching design depth due to densification of adjacent columns, will the work be accepted? iii. It is our position that as the installer, it is our discretion when refusal is met to make the call. We do not intend to damage tooling and equipment when refusing on a dense layer. Please confirm that refusal criteria will be at the installer's discretion.	i. Contractor's bid shall be predicated on the assumption that the specified ARR is to be achieved with no reduction. As stated in Section ESCR-5, Contractor will be required to install demonstration or test stone columns and results will be reviewed by the Engineer. ii. The work will be accepted if the confirmation SPT boring or CPTs after installation of the stone columns show that sufficient improvement or densification has occurred, as stated in Section ESCR-5. iii. Current site conditions show that very loose soil is present on site; this generates concerns regarding excessive settlement and liquefaction potential. The site is required to be improved to address these issues to the satisfaction of the Engineer. After testing, contractor shall provide to the Engineer results and written description of proposed refusal criteria to be approved by Engineer.
9	115	Who is responsible for the verification calculations for aggregate pier post-treatment liquefaction and settlement?	Section ESCR 5.13 covers the performance requirements, where both settlement and liquefaction are addressed. The Contractor must perform these evaluations based on his post improvement SPT borings or CPTs, showing that conditions have been mitigated. The Engineer will evaluate the improved conditions, to verify that the results provided by the Contractor are adequate.
9	116	Is there any additional as built information on the existing timber cribbing? What material has the timber cribbing been filled with?	No addtional as-builts are available.
9	117	Will TIP testing be accepted in lieu of PIT testing for rigid inclusions?	The Contractor may submit a VECP to use Thermal Integrity Profiler (TIP) testing rather than Pile Integrity Testing (PIT) for approval. However, should the VECP be approved and an anomaly be found in the Rigid Inclusions based on TIP, it might be necessary to confirm the condition with some other approach such as PIT.

Addendum	Addendum Question No.	Bidder's Question	Response
9	118	If a Rigid Inclusion meets refusal at tip elevation shallower than indicated in the Contract Drawings, clear of a surficial obstruction but in dense virgin/in-situ material, will the rigid inclusion be accepted?	As stated in Section ESCR-5.1, the Engineer will evaluate results from the required rigid inclusion column load tests and issue the final tip elevations. Contractor shall provide proposed refusal criteria to be approved by Engineer. Should refusal occur at a higher elevation during construction, with mutual agreement with the Engineer, the tip elevation may be adjusted.
9	119	Using displacement methods for Rigid Inclusions does not guarantee that prescribed tip elevations will be achieved at every location. Non-displacement methods will increase the likelihood of reaching prescribed tip elevations. Will non-displacement installation methods for Rigid Inclusions be accepted?	No, the displacement method must be used for installation of the rigid inclusions.
9	120	Typically, unreinforced drilled displacement rigid inclusions are spaced a minimum of 4 diameters apart to void damaging previously installed adjacent elements. The 5' spacing indicated on the drawings only provides 3.33 diameter spacing for the proposed elements. Will a smaller ARR be accepted to provide a minimum spacing of 4 diameters to protect adjacent elements?	No, the Contractor must follow the Rigid Inclusion spacing or ARR provided on the drawings. The Contractor must sequence construction operation such that when installing the Rigid Inclusions, the surrounding Rigid Inclusions will have sufficient time to set and gain strength. Sequencing the installation operations should minimize the possibility of damaging the Rigid Inclusions. The current design is based on the spacing or ARR provided, and the contractor should attempt to construct the Rigid Inclusions as shown on the drawings.
9	121	Soil Mixing Area Replacement Ratio (ARR) is ~23% based on 2’ diameter columns on 4’ center to center triangular grid. Are larger diameter soil mix columns acceptable, provided ARR is maintained?	Yes, larger soil mix columns maintaining the ARR may be used.
9	122	Construction of the 2' thick soil mix mat should be included in what bid item?	The soil mix mats are the spoils from the DSM installation and the cost is part of the DSM installation under Item 203.99010039.
9	123	Specification Item 203.99010039 - Deep Soil Mixing references a "deep mixing demonstration program" prior to production column installation. How many columns constitutes a "program"? Where would this program for columns be located since there are 3 different soil mix column depths/zones on the contract drawings (7, 8, and 9)?	Drawing SM308 has been revised to include the deep mixing demonstration program location and deep soil mix column depths. Refer to Addendum 9, Article 4.
9	124	If a soil mix design strength of 200psi is achieved prior to 28 days elapsed time from wet-grab samples taken during the demonstration program, can production DSM work commence prior to getting the 28-day result?	Yes, production of DSM work can commence prior to getting the 28-day result if a soil mix design strength of 200 psi is achieved prior to 28 days elapsed time from wet-grab samples taken during the demonstration program.

Addendum	Addendum Question No.	Bidder's Question	Response
9	125	Are continuous cores required for the soil mix demonstration program, and if so, how many?	The number of the continuous cores for the soil mix demonstration program will be selected by the Engineer as specified in Section G. Quality Control / DSM Testing Frequency of ITEM 203.99010039 - DEEP SOIL MIXING.
9	126	Soil mixing is a mixing technique, not a drilling technique. Obstructions, whether man-made or natural, can cause significant damage to tooling. Is there a separate pay line item for obstruction drilling (and/or pre-drilling) for soil mixing? If not, please provide one under addendum.	New specification Section ESCR 203 and new items ESCR-203.12 PVD and ESCR-203.99 DSM have been added. Drawings SM305 to SM309 have been revised. Refer to Addendum 9, Article 2; Addendum 9, Article 4; and Addendum 9, Article 3.
9	127	The Pay Item Descriptions for Items 202.120001, 202.120002 and 202.120003 per Addendum #3 Bid Schedule do not match the descriptions on pages PD-2R and PD-3R of the Specifications per Addendum #4. Please clarify this apparent discrepancy.	The item descriptions in the bid schedule have been revised. Refer to Addendum 9, Article 2.
9	128	Re: Drawings WS-140-WS-149 & WS 101-WS109 . Quantity for the Types of Esplanade Demolition are completely different than what we are directed to on the Project Bid Pricing sheets.. Kindly clarify.	Drawings WS140 to WS148 have been revised and items ESCR-6.27 C, D, F, and G have been added to the bid schedule. Refer to Addendum 9, Article 4 and Addendum 9, Article 2.
9	129	Please provide detail for Manhole MH-B14 which is on drawing number DS301.	Drawing DS704 has been revised with new details for Manhole MH-B14. Drawing DS301 has been revised to include item 51.21LB14000V. Refer to Addendum 9, Article 4.
9	130	Referencing Sheets 2010 thru 2012, water play at Delancy, Houston and 10th Street. Please clarify how the work at the three locations are paid when there are only two Bid Items, PK-ESCR 617 Decorative Steel Spray Fixtures Houston Street (1 LS) and PK-ESCR 619 Sport Steel Spray Fixture (11 Each). By our count there are 12, 7 and 12 fixtures at Delancy, Houston and 10th Street respectively.	Water Play Features items PK-ESCR 616, PK-ESCR 617, and PK-ESCR 618 are listed on contract drawings PUP320, PUP321, and PUP322 for all the three (3) locations (Delancy, Houston and 10th Street). PK-ESCR 619 count from contract drawings are as follows: PUP303 - 2 EA, PUP304 - 1 EA, PUP305 - 2 EA, PUP306 - 3 EA, PUP307 - 1 EA, PUP308 - 1 EA, PUP309 - 1 EA, Total quantity = 11 Each.
9	131	Please provide profile detail for item 60.12D12- Laying 12-Inch Ductile Iron Pipe and Fittings.	Drawing DS309 has been revised to include text on tie-ins for the water main to match existing elevations. Refer to Addendum 9, Article 4. Profile of existing water mains is not available. Contractor shall verify existing elevations.
9	132	RE: Rigid Inclusion. Specification says: Removal of the obstruction or drilling through the obstruction shall be paid at the obstruction rate, while offsetting the column location will be paid at the standard rate for rigid inclusion in subsurface soils. However ESCR- 5.01 OB is not a bid item. Kindly clarify how obstructions are to be paid.	Item ESCR-5.1-OB has been added. Drawing WS320 has been revised to include assumed 10% of volume of rigid inclusions to be paid under this pay item. Refer to Addendum 9, Article 2 and Addendum 9, Article 4.

Addendum	Addendum Question No.	Bidder's Question	Response
9	133	Please clarify detail 8/LSL700	Detail and corresponding items have been reviewed and checked and no issue was found.
9	134	Reference item ESCR-4 MOVABLE TL4 STAINLESS STEEL JERSEY BARRIERS. After several conversations with barrier manufacturers and suppliers of movable barriers, they said no Test – Level 4 Stainless Steel moveable barriers exist that meet the spec. Can the agency spec out several suppliers?	Specification Section ESCR-4 has been revised to include all known manufacturers though approved equals will also be acceptable. Refer to Addendum 9, Article 3.
9	135	Reference Sheet 1956 of 2791, LD800-00 Precast Amphitheater Seatwalls. The module schedule lists Modules E1 and E2 as Item Numbers PK-ESCR 906 E. We do not see that bid item in the Bid Schedule Form (Revision #1). Please clarify.	Item PK-ESCR 906 E has been added. Refer to Addendum 9, Article 2 for the current bid schedule.
9	136	Refer to PUD400 series of drawings - Specify spacing for mini-piles.	Drawings PUD400 to PUD417 have been revised to include a Note 6 referring to Standard Detail NYCDEP-SE2 and Standard Detail NYCDEP-SE6. Refer to Addendum 7, Article 2.
9	137	Provide detailed drawing (including dimensions) for Drop Manhole.	Refer to detail on drawing PUD705.
9	138	Supply detail for cleanout manhole - Item 51.21C00000C.	Drawing PUD707 has been revised. Refer to Addendum 9, Article 4.
9	139	Refer to drawings LM527 & LM528 - Specify beginning and end limits for curb type 1/17 located at the western edge of the site.	If the question is referring to the formlined wall, see FW100 and FW300 series. If the question is referring to the curb type 1/17 the is running along the western edge of the Shared Use Path, the beginning of this curb is noted on sheet LM520 and the end of this curb is noted on sheet LM528.
9	140	Refer to sheets LD826, LD827 & LD 911A - The table on sheet LD 911A does not match the details on sheet LD826 and LD827. Which is correct?	Drawings LD826, LD827, and LD911 show typical details. The schedule on drawing LD911A shall be followed.
9	141	Refer to sheets LD911 & LD911A - The detail on sheet LD911 specifies a type 4 wall for backstops. The table on sheet LD911A specifies a type 2 wall. Which is correct?	Drawing LD911 shows typical details. The schedule on drawing LD911A shall be followed.
9	142	Refer to sheet LD911 - This sheets shows a type 3 wall. It does not appear in the table on sheet LD911A. Where is this used?	Drawing LD911 shows typical details. The schedule on drawing LD911A shall be followed. Wall Types 3 & 4 are not shown in the tables on drawing LD911A.
9	143	Refer to sheet LSL700, detail 8/LSL700 - The detail specifies item PK-ESCR967, Nonwoven geotextile seperation. This does not match the descrition of item PK-ESCR976 in the bid sheets.	Per specification Section PK-ESCR 937 (which covers Item PK-ESCR 967) and prices to cover description for item PK-ESCR 967 DRAINAGE FOR NATURAL TURF FIELDS, nonwoven geotextile separation is included in item PK-ESCR 967 in prices to cover.
9	144	Refer to sheet LSL700, detail 8/LSL700 - The detail speifies a Horticultural Drainage Layer, item PK-ESCR967. Is this the correct item? Should it be PK-ESCR937A?	Per specification Section PK-ESCR 937 (which covers Item PK-ESCR 967) and prices to cover description for item PK-ESCR 967 DRAINAGE FOR NATURAL TURF FIELDS, horticulatural drainage layer is included in item PK-ESCR 967 in prices to cover.

Addendum	Addendum Question No.	Bidder's Question	Response
9	145	Refer to the Bid Sheets, Item PK-ESCR937D, Planting Soil for Seeded and Sodded Lawn - Where is this item used? It does not appear in the details on sheet 8/LSL700.	Drawing LSL700 has been revised to include a callout for PK-ESCR 937 D in Detail 8. Refer to Addendum 9, Article 4.
9	146	Item T-3.18, 'Post to be Removed & Replaced', as noted on sheet 553 does not appear in the Bid Schedule. Please clarify.	Drawing F100 has been revised to replace the reference to item T-3.18 with items 6.82 A and 6.82 B. Refer to Addendum 9, Article 4.
9	147	Items NYCT-7A.1, NYCT-7A.2, 'Fill Leveling Cement Mortar' and 'Membrane Waterproofing', as noted on sheet 568 do not appear in the Bid Schedule. Please clarify.	Items NYCT-7A.1 and NYCT-7A.2 have been removed from revised drawing F124. Refer to Addendum 9, Article 4.
9	148	Item 4.11 CA, 'Clean Fill', as noted on sheet 568 does not appear in the Bid Schedule. Please clarify.	Drawing F124 has been revised to replace the reference to item 4.11 CA with item ESCR-4.11 CA for the fill. Refer to Addendum 9, Article 4.
9	149	Item ESCR-2.GI, 'Ground Improvements', as noted on sheets 873 trough 897 does not appear in the Bid Schedule. Please clarify.	Item ESCR-2.GI has been removed from the WS600 drawing series. Refer to drawing WS320 for the correct item numbers for ground improvements. Refer to Addendum 9, Article 4.
9	150	With respect to question 15, above, Ground Improvement Tip Elevation vary from El. -30.00 to El. -55.00, while Top El. drops from El. 6.00 to El. 2.25. The mechanics of Ground Improvements need be more explanatory. It would be very beneficial if DDC design team conducts a presentation of key elements of the job design, target parameters, objectives of construction phasing, etc., so the contractors and subcontractors could have more informative approach to the project while analyzing the job in front of them.	The ground improvement tip elevation is varied throughout the park to match the varied subsurface conditions. Stability requirements, settlement mitigation, and liquefaction mitigation all contribute to the differences in tip elevations found in the ground improvement (GI) program. The top elevation for most of the GI program is at +6' NAVD88 with certain locations at +2' NAVD88 where the tie rod elevation is lower.
9	151	In the overall cross section of the esplanade D-6A (as example) drawings set "0533-1066 Flood Protection (Addendum 3 Update)", sheet 880A of 2791 (WS607A) it is shown the Expansion Joint as Bid item "ESCR-567.LG". However, in the detail page for these joints, sheet 966 of 2791 (WS761) it is called part of bid item 565.14200008 instead of ESCR-567.LG. Please clarify.	Drawing WS607A has been revised to include item 565.14200008. Refer to Addendum 9, Article 4.
9	152	Regarding Pay Item ESCR-6.27 TP, Removal of Existing Timber Pile. The plans show timber piles being removed or cut off in various esplanade demolition sections, shown on plan sheet WS140, 141, 143, 146. Please confirm that the removal of the piles shown on the esplanade/embayment demolition plan sections are to be included in Pay Item ESCR-6.27 TP, and not paid in the related sections and their pay items.	The removal of timber piles is paid under item ESCR-6.27 TP. Timber piles being cut off is included in the related sections and their pay items.

Addendum	Addendum Question No.	Bidder's Question	Response
9	153	Regarding Pay Item 582.06, REMOVAL OF STRUCTURAL CONCRETE-REPLACEMENT WITH CLASS D CONCRETE. Locations and details for this item can not be locatedon the plans. Please provide details for this work.	Refer to drawing WS002 notes under “Repair of Existing Elements to Remain.” Item 582.06 is intended for the repair of existing pile caps following demolition of the existing esplanade deck. Location and extent of repairs will be determined in agreement with the Engineer in accordance with the requirements of the NYSDOT Standard Specification Section 582.
9	154	Reference to bid item number 537 - “JB 100.1 (CABV) - UTILITIES CROSSING TRENCH FOR CATCH BASIN CHUTE CONNECTION AND/OR TEST PIT (TYPE .1) Unit price bid shall not be less than: $ 525.00”. Please clarify what “Type.1” means and where we can find details for this. Additionally, please provide a schedule for different “types” mentioned in several of the JB bid items. Bid items 538-578, 588-591, 612-617 have similar wording. This information cannot be found on the drawings and without it crossings cannot be assigned to a pay item.	Refer to "Method of Measurement" in specification sections JB 100 – 116, JB 330E, and JB 410 for information on the "Type" designations for the referenced bid items.
9	155	Reference to Utility Crossing Schedule than can be found on sheet 607 and 608 (Pages F710 and F711). Please clarify which pay item each crossing ID refers to. The missing information about depth or details do not permit these items to categorize under existing pay items. Additionally, pay items make reference to a “type” of utility crossings (type 1, type 2, etc.). Schedule does not follow same characterization. Conflicting information make it difficult to assign each crossing to a pay item.	Each crossing ID represents utility lines crossing the line of flood protection, requiring special details, based on the Type. The Types of crossings (A - G) are detailed in drawings F700-F706. There is no reference to any numbered types of utility crossings on F710 and F711, they are all lettered.
9	156	Reference to Utility Crossing Schedule than can be found on sheet 607 and 608 (Pages F710 and F711). Please clarify what “Crossing Type A” (and other letters) mean. Where can we find details for crossing type A, B, D, F, G?	Crossing types A through G are located on drawings F700 through F706. Drawings F710 and F711 have been revised with an added reference. Refer to Addendum 9, Article 4.
9	157	Reference to Utility Crossing Schedule than can be found on sheet 607 and 608 (Pages F710 and F711). Please provide clarification for crossings with missing location, station number, assumed depth and detail.	The approximate stationing locations of the utility crossings have been added to the utility schedule. Drawings F710 and F711 have been revised. Refer to Addendum 9, Article 4.
9	158	Clarify if Structural Steel Note 13 that specifies the interior surface of box members accessible by hand holes are intended to “receive the full 3 coat paint system” or if that area was intended to be metalized along with the rest of the structural steel as indicated in Note 1.	Limits of 3 coat paint system shall extend at least 3 feet of edge of handholes. If the 3 foot distance from handhole is obstructed by a diaphragm, the limits shall extend to the diaphragm as applicable. At a minimum, a prime coat of paint shall be applied to all box member interior sections regardless of distance from a handhole or diaphragm.
9	159	Per Structural Steel Note 13, please provide required limits of the coating (3 coat paint or metalizing) within the interior of the box from the edges of hand holes.	Limits of 3 coat paint system shall extend at least 3 feet of edge of handholes. If the 3 foot distance from handhole is obstructed by a diaphragm, the limits shall extend to the diaphragm as applicable. At a minimum, a prime coat of paint shall be applied to all box member interior sections regardless of distance from a handhole or diaphragm.
9	160	Per Structural Steel Note 13 and previous RFI question: please clarify, if the box member interior is intended to be metalized, whether a top coat is required and if so, is that required to be “GWB Gray” as indicted in Structural Steel Note 2 or can be a clear coat.	The interior of the box member need not be metalized but shall be painted. Top coat is required. Top Coat color need not be GWB Gray and may be clear coat.

Addendum	Addendum Question No.	Bidder's Question	Response
9	161	Pay item 202.120003, Removing Existing Superstructures and Obstructions. Kindly clarify what work exactly this bid item covers that is not included in 2 previous bid items.	Item 202.120003 covers Corlears Hook Pedestrian Bridge. The limit of demolition is shown on sheet BC101 and BC101A
9	162	REDACTED	
9	163	The section for Moveable TL4 Stainless Steel Jersey Barrier specifies all materials per 4.01.4 to be SS Grade 316 and 4.01.6 limits the barrier weight to 50lbs/LF without the wheel system. The manufacturer of the barrier system that most closely matches the specifictions has indicated that due to the increased density of Stainless Steel the barrier system as dimensioned and specified is ~ 64lbs/LF. Please increase the allowable weight/LF or reduced the dimensions of the barrier system.	Specification Section ESCR-4 has been revised. Refer to Addendum 9, Article 3.
9	164	Sheet 1197 shows two proposed 12" Storm DIP runs, one is crossing the FDR (64 LF) another is running along the East Side of the FDR and connecting into an existing Catch Basin (212 LF) please provide the invert for each of these runs so proper Excavation/SOE can be figured	Drawing DS310 has been revised and the referenced storm pipes have been deleted. Refer to Addendum 9, Article 4.
9	165	Please refer to Spec Section JB-123, A.1.5 requires a mandatory site visit. Can you provide a date and time for the site visit?	A mandatory site visit is not necessary, and will not be held.
9	166	Please refer to Spec Section JB-123, A.2.2 states that the feeders have repair barrels of varying diameters, lengths and locations. Can you provide the number of barrels, locations, lengths and diameters? If that information does not exist, will Con Ed provide a standard barrel design to bid as an extra per barrel?	Con Edison cannot respond to the exact number and location of barrels. These feeders in the park do not have a major leak history. Refer to attached document CE-TI-3356 as reference.
9	167	Please refer to Spec Section JB-123, A.2.5 discusses trenching for access to the feeders. What are the minimum clearances around the feeders required for trenching?	Con Edison requires a 1-ft minimum clearance around the oil-o-static and return lines, but 2-ft is preferred. Refer to JB-405A for trench excavation requirements for carbon fiber wrapping existing utility facilities.
9	168	Please refer to Spec Section JB-123, A.2.7 requires the contractor to install a low-profile mechanical clamp at all leak locations. Is Con Ed providing the clamps? If not, does Con Ed have an approved clamp to use?	Con Edison will provide clamps for leaks. The Contractor must notify Con Edison for these clamps.
9	169	Please refer to Spec Section JB-123, B.2.13.1 states that the work site shall be thoroughly examined prior to the work starting. Will the entire trench be exposed prior to starting the work? If not will the examination be allowed as each section is exposed?	The Contractor must submit their work plan stating how much will be exposed at a time, along with other details as part of their means & methods. Con Edison, in coordination with the City, will review the work plan and provide comments/approval.

Addendum	Addendum Question No.	Bidder's Question	Response
9	170	Please refer to Spec Section JB-123, B.4.1 states that all composite materials shall be on site prior to the start of the job. Does Con Ed expect that all material to be purchased and stored throughout the project prior to the start of the job? This would require a very large warehouse with significant climate controls. Would proof of purchase order and delivery date/schedule from the OEM suffice?	The Contractor does not have to order all materials on site prior to the job start. Contractor must be responsible to have enough to start/continue work and should have enough materials on site so that there is no work stoppage/delays on certain construction activities that have a time limit.
9	171	Please refer to Spec Section JB-123, B.7.1.1 Does Con Ed have an approved alternate system? If one is approved by Con Ed will all bidders be given an opportunity to bid on the new system?	Currently there is no alternative system/method.
9	172	Please refer to Spec Section JB-123, B.7.1.1 If a contractor has an alternate system that meets ASME PCC-2 should they bid that system as well as the system described in JB 123?	No.
9	173	Please refer to Spec Section JB-123, E.2.6 requires a Third-Party NACE Level III Inspector, Contractor QA/QC Manager, Certified OEM Representative and a Company Representative be present prior to work proceeding. E3.4 references a Third-Party QC Inspector. It is our understanding that the contractor needs to hire an OEM Representative, a NACE III Inspector reporting to him, a QC Manager reporting to him and must hire an additional Third-Party NACE III Inspector for Con Ed reporting directly to Con Ed. Is this correct?	Contractor is responsible for Third-Party NACE Level III Inspector, Contractor QA/QC Manager, and Certified OEM Representative. Con Edison is responsible for NACE Inspector and Field Engineer.
9	174	Please refer to Spec Section JB-123, Appendix IV 7.2.1 requires that the FRP 120HT cures for a minimum of 8 hours before moving to the next step. Is this just for high hats or is an 8-hour cure required every time FRP 120HT is used?	8-hr cure is necessary prior to continuing on to the next step. But the Contractor can also move to another work location.
9	175	Please refer to Spec Section JB-123, Are there any restrictions on hours or days of work?	The City's work restrictions set precedence. Con Edison's restrictions are based on existing and/or anticipated system conditions.
9	176	Please refer to Spec Section JB-123, How many trench feet can be open at one time?	The Contractor must submit their work plan stating how much will be exposed at a time, along with other details as part of their means & methods. Con Edison, in coordination with the City, will review the work plan and provide comments/approval.
9	177	Please refer to Spec Section JB-123, Can trenches be left open during non-working times?	Trenches can be left open at the discretion of Con Edison and Resident Engineer, but Con Edison facilities must be supported and protected at all times when exposed. Refer to JB-405A. Safety is of utmost importance.
9	178	JB123 Installation of composite carbon fiber systems section A2.2 states to repair barrels of varying diameters, lengths and locations. Please provide a barrel map and or a list of the qty, diameter and length of barrels located within the scope of the project.	Con Edison cannot respond to the exact number and location of barrels. These feeders in the park do not have a major leak history. Refer to attached document CE-TI-3356 as reference.

Addendum	Addendum Question No.	Bidder's Question	Response
9	179	There is a conflict between the cut-off wall profile and the deadman profile matchline station denoted on Contract Drawings WS430 and WS431. Please clarify which station is correct.	Drawings WS430 and WS431 have been revised. Refer to Addendum 9, Article 4.
9	180	Please clarify that the bottom of COMBI-PILE cut-off wall elevation of -32 on Contract Drawing WS432 is correct. WS431's bottom elevation was modified under previous addendum to -33.	The bottom of combi-pile cut-off wall elevation is -34.0' . Drawings WS431 and WS432 have been revised. Refer to Addendum 9, Article 4.
9	181	Contract Drawing WS 438 denotes both EL -50 and EL -61 as bottom of COMBI-PILE cut-off wall elevation. Please clarify which elevation is correct.	Tip elevations are -85.0' and -61.0' . Drawing WS438 has been revised. Refer to Addendum 9, Article 4.
9	182	Several of the Waterfront Structures drawings refer you to Sheets WS539A-WS539H for locations of the proposed deck drains along the Esplanade. These drawings do not appear to be included in the contract documents. Please provide these drawings.	Drawings WS539A to WS539H were provided in Addendum 7, Article 2.
9	183	The Waterfront Esplanade Prestressed Concrete Beam Details on Sheets 935-939 call for the drilling of a 1-3/4" diameter hole for the bearing anchors of the AASHTO Girders to be paid under Item 586.0201, while the #8 anchor rod and epoxy be paid under Item 565.1925. The Waterfront Esplanade Typical Sections at the piers on Sheets 913-920 call for the same drilling, anchor rods and epoxy to be all paid for under Item 586.0201. Please clarify as to under which item the anchor rods and epoxy are paid for.	The work for the anchor rods to be drilled and epoxy anchored into the cap falls under item number 586.0201, as shown on drawings WS660-WS667. This is a separate bid item from the bearings, which includes the anchor rods themselves but not the installation. For the diaphragm rods, the material and epoxy are included in pay item 565.1821 and a separate item number is provided for the drilling as 586.0201. These are in accordance to NYSDOT Standard Specifications Section 565.
9	184	Contract Drawing F601, "Section at STA. 22+43", denotes proposed 24" diameter steel pipe piles/Item # ESCR-551.24.05C. Referring back to drawing F301 is not clear where this items start and end station is located. Please clarify.	Please refer to the F300s, F400s and FM300s drawings for quantifying the number of proposed pipe piles in each reach. The pipe piles are required where there are many utility crossings and installation of a sheet pile is not feasible. After location of utilities in field, pipe pile quantity may change as approved by Engineer.
9	185	In reference to Sheet 853 (Drawing WS513), in both of the details for the Pier 166 & Pier 167 Pedestal Reinforcement, what is the spacing of the #6 epoxy rebar dowel which is to be drilled and grouted into the existing pile cap?	The #6 epoxy rebar dowels that are drilled and grouted into the existing pile cap at the Pier 166 and 167 Pedestals shall be spaced at 6” to match the proposed bars in the pedestals that they are lapped to. Drawing WS513 has been revised. Refer to Addendum 9, Article 4.
9	186	In reference to Sheet 854 (Drawing WS514), each of the three backwall details calls for a #6 epoxy bar @ 6" to be embedded 2'-0" into the existing pile cap and be paid for under Item 565.0201. This bid item is not included in the bid item list for this contract. Should this work be paid under Item 586.0201? If not, please provide the correct bid item.	586.0201 is the correct item number. Drawing WS514 has been revised. Refer to Addendum 9, Article 4.

Addendum	Addendum Question No.	Bidder's Question	Response
9	187	Reference: Existing Deadman cut elevations; Drawing WS140, Sheet 708 Waterfront Demolition Section, Sheet 1 of 10, Flood Wall; Drawing WS 100 Waterfront Demolition Plan, Sheet 670; Drawing WS 101 Waterfront Demolition Plan, Sheet 671; Note No. 3 on Drawing WS140 reads: "The top of the existing deadman should be cut down to El. +3.41' NAVD88 in specific locations. Refer to Drawings WS100 and WS101 for exact locations." However, per Drawing WS 100, between bents 1 and 4 existing sheet pile deadman will be partially demolished to El. +3.0' and between bents 4 and 5 sheet pile deadman will be partially demolished to El. -5.0' and per Drawing WS 101 between bents 35 and 38 existing sheet pile deadman will be partially demolished to El. +3.0' and between bents 38 and 39 sheet pile deadman will be partially demolished to El. -6.0'. Please clarify location where the existing deadman will be cut down to El. +3.41?	Elevations shown on WS100 and WS101 are correct. Drawing WS140 has been revised. Refer to Addendum 9, Article 4.
9	188	Reference: Corlears Hook Bridge Deck Sections, Drawing BC 140, Sheet 150. Note on Drawing BC 140 reads: "Refer to architectural drawings for handrail and guardrail section (Item No. NYC-607.064 AA)." This item is not part of the bid breakdown. Please clarify.	Drawing BC140 has been revised to remove reference to the item. Refer to Addendum 9, Article 4.
9	189	Is there an Elevation to show the Pattern/Design for 'Perforated' SS Door – Type 'D' ? - on Door Schedule a. (Same applies to Type 'E' on the Track & Field Building Door Schedule)	Perforation is to match clerestory window MPS-01 perforated metal, refer to Detail 5 on drawing A-672.00 and Detail 5 on drawing A-582.00. See revised notes on door schedule/types on drawings A-580.00 and A-670.00. Refer to Addendum 9, Article 4.
9	190	Door Type C is Labelled Perforated SS – but on the Door Schedule as HM – which is correct ?	The door schedule is correct. See revised note under door C on drawing A-670.00. Refer to Addendum 9, Article 4.
9	191	Contractors Pollution Liability - The scope of work includes watermain work, Con Edison utility work, earthwork and demolition. Schedule A includes a limit of $5,000,000 however it does not make CPL a required line of coverage. Can you please consider to include the coverage in Schedule A for this?	Refer to Addendum 6, Article 3
9	192	Seq No. 0009, Item 203.12030017 "Prefabricated Vertical Drains" has an engineer's estimated quantity of 2,341,219 L.F. whereas the quantity derived from the drawings amount to a approximately 55% of that quantity. Please clarify this apparent discrepancy.	The quantity for this item has been reduced. Refer to Addendum 9, Article 2.
9	193	Seq No. 0011, Item 203.12430017 "Preparing Surface for Prefabricated Vertical Drains" has an engineer's estimated quantity of 633,918 S.F. whereas the quantity derived from the drawings amount to a approximately 55% of that quantity. Please clarify this apparent discrepancy.	The quantity for this item has been reduced. Refer to Addendum 9, Article 2.
9	194	Seq No. 0416, Item ESCR-4.11 AS "Earth Excavation for Structures" has an engineer's estimated quantity of 4,442 C.Y. whereas the quantity derived from the drawings amount to less than 50% of that quantity. Please clarify this apparent discrepancy.	Item ESCR-4.11 AS includes earth excavation for areas with structures including, but not limited to, floodwall, floodgate foundations, and concrete security wall. Item number has been added to revised drawings F610, F702, and SB701. Refer to Addendum 9, Article 4.

Addendum	Addendum Question No.	Bidder's Question	Response
9	195	[Item 8.22 D] Can you confirm that the Bid Item Quantity is in SF and not SY, as we are getting the quantity like 10 times bigger. Please clarify	Item 8.22 D has been removed and replaced by item 595.50000018. Refer to Addendum 9, Article 2 for the current bid schedule.
9	196	The specs (ESCR-2) call for precautions during the installation of Jet grouting to prevent movements, settlement or heaving and damage to existing structures, roadways, utilities, etc. The specs call also for drilling equipment and drill bits capable of advancing through obstructions such as concrete, brick, stones, timber piles, seawalls, cobbles, and boulders. Please note that it is not to drill through obstructions without vibrations and movements on the existing utilities and adjacent structures. The jet grouting system, especially the double and triple fluid methods, with compressed air are likely to cause movement in the ground. Please clarify how much movement (settlement and/or heave) will be allowed; threshold values have been established for monitoring of all the structures and/or utilities?	Permissible settlement and vibration levels are addressed in Specification Sections ESCR 76.11 and 76.21.
9	197	As per specification ESCR-2, the Unconfined Compressive Strength (UCS) for treated jet grouted soil varies between 250-750 psi (in 28 days) which may be difficult to achieve. Please confirm UCS within a range of 250-350 psi is acceptable?	It is the Engineer's expectation that the specified range is achievable and the Contractor shall develop their bid based upon the design as specified. However, following completion of the initial demonstration test program, the Engineer will review results of the program and may reassess requirements prior to commencement of full grouting program.
9	198	As per specification ESCR-2, the minimum unit weight of jet grouted soil varies between 110 to 120 pcf, which may be difficult to achieve. Please confirm unit weight of jet grouted soil within a range of 90-110 pcf is acceptable?	It is the Engineer's expectation that the specified range is achievable and the Contractor shall develop their bid based upon the design as specified. However, following completion of the initial demonstration test program, the Engineer will review results of the program and may reassess requirements prior to commencement of full grouting program.
9	199	As per specification ESCR-2, a permeability of Jet grouting of 10-6 cm/sec is required; there is a conflict with the value shown in the drawing F002 "flood protection general notes" which says 10-7 cm/sec. Please confirm the minimum acceptable value for the permeability of jet grouted treated soils.	1x10^-6 cm/sec is the correct value for the minimum hydraulic conductivity. Drrawing F002 has been revised. Refer to Addendum 9, Article 4.
9	200	As per specification ESCR-2 a minimum of one in-situ wet grab sampling per day is needed consisting of 3 sampling depths. The possibility to push a sampler inside the fresh column is limited in general up to 20 ft in depth. Please confirm if wet grab samples taken up to 20-ft depth from top of JG is acceptable?	Wet grab sample obtained from 20 ft from the top of the jet grouting column is acceptable.
9	201	As per specification one vertical alignment profile for jet grouted elements is needed per day, while at page 12 it is indicated to perform borehole deviation measurements on the 5% of the jet grouted columns. Please confirm one vertical profile per day for Jet Grouted Columns is acceptable.	We confirmed that the primary requirement is that one vertical alignment profile for the jet grout columns is required per day. Refer to revised specification ESCR-2 in Addendum 9, Article 3

Addendum	Addendum Question No.	Bidder's Question	Response
9	202	Specification Section 203.99010039: Point C – Mix design: Specification for DSM call for a water to binder ratio 1:1. Please clarify if this ratio is referred to the grout or to the total water to binder ratio?	Total water to binder ratio.
9	203	Specification Section 203.99010039:Point D – Soil-Binder Mixing: Specification for DSM call for predrilling of soil with a plasticity index PI greater than 20 to prepare the soil for modification. Please clarify the term prepare the soil for modification.	Prepare the soil for modification means to auger the soil first before injecting slurry.
9	204	Drawing # ESC104 and ESC107: Ground improvement areas are indicated as both DSM and Stone Columns. Please clarify only DSM is needed in these stated areas.	See revised General Note 8 on drawing ESC002. Refer to Addendum 9, Article 4.
9	205	Drawing # ESC110 (reach E, F and G): Ground improvement areas are indicated as DSM. Please clarify only DSM is needed in these stated areas.	See revised General Note 8 on drawing ESC002. Refer to Addendum 9, Article 4.
9	206	Drawing # SM310: Typical Deep Soil Mixing columns detail show 2 ft of DSM spoil at the top of the DSM columns. Please confirm the DSM columns to be installed from the existing grade and the top of the DSM columns is approximately two feet below the existing grade.	Confirmed. Excavate 2 feet, then install DSM columns.
9	207	Is the Contractor permitted to ship any Materials by barge directly to the project site, without utilizing the Facility in specification section ESCR-7.13 WF-1?	Yes. Provided that all of the QA/QC procedures, material pre-inspections and acceptance of materials are completed prior to delivery to the project site. Materials without approval paperwork will not be permitted to be installed.
9	208	Will the Contractor be permitted to utilize other waterfront facilities of their choosing that are more appropriate for a particular use?	Yes, items such as stone (by barge, bulk) and similar items loaded directly to barges is not necessarily expected to go to the waterfront facility. Note that all of the QA/QC procedures, material pre-inspections and acceptance of materials are completed prior to the delivery to the project site. Materials without approval paperwork will not be permitted to be installed.
9	209	Controlled Inspections are referenced as an activity to be performed by the City at the Facility specified under Section ESCR 7.13 WF-1. Is it the City Intention to accept or reject materials such as Pipe, Piles, Sheets, Aggregates, Pre-Cast Concrete ,etc that have already been Submitted through the approval and or design processes, purchased and delivered to the facility. Will the City not perform inspection of materials prior to delivery to confirm acceptance and compliance with specifications, long before any materials reach the Facility in specification Section ESCR 7.13 WF-1?	The contractor shall give the Engineer, in writing, sufficient notice in advance of any manufacture or fabrication of materials that will become permanent parts of the work, to allow the Engineer's representative the opportunity to provide inspection of said material(s) before shipping. The intent of the facility for inspections is that the material(s) delivered meet what was approved and signed off on at the fabrication plant prior to delivering to the job site, that there is no damage, and that the material(s) are signed in and logged. Note that this same procedure will apply for materials delivered directly to the project site. Additionally if there are any components of the installations that will be assembled by the contractor BEFORE coming to site, this yard is intended to be that location.

Addendum	Addendum Question No.	Bidder's Question	Response
9	210	Waterfront Cut Off Wall Platform 5, sheet 1021 A of 2791 (WS885A), show the Battered Pipe Piles as Item ESCR-551.245.05, however in the same sheet these are called as Item ESCR-551.30.01.C. Please clarify.	Item ESCR-551.30.01.C is correct. Drawing WS885A has been revised. Refer to Addendum 9, Article 4.
9	211	Waterfront Cut Off Wall Platform 2, sheet 1006 of 2791 (WS860) the Piles are assigned to two items, ESCR-511.3605.CS and ESCR-511.3605.CSD. Please clarify what range (wall length) of the wall correspond to one item and what to the other item.	Approximately 50% of the cut-off wall piles from piers 164-167 correspond to ESCR-551.36.05.CS and 50% to ESCR-551.36.05.SD. The cut-off wall pile schedule on drawing WS441A has been revised. Refer to Addendum 9, Article 4.
9	212	Waterfront Cut Off Wall Platform 3, sheet 1011 of 2791 (WS870) the Piles are assigned to two items, ESCR-511.3605.CS and ESCR-511.3605.CSD. Please clarify what range (wall length) of the wall correspond to one item and what to the other item.	Approximately 50% of the cut-off wall piles from piers 164-167 correspond to ESCR-551.36.05.CS and 50% to ESCR-551.36.05.SD. The cut-off wall pile schedule on drawing WS441A has been revised. Refer to Addendum 9, Article 4.
9	213	Drawing PCH308 refers to BT189 FOR CONTINUATION OF CONSTRUCTION. However, BT189 details the ARCH. CONC. FINISH PATTERN. Please clarify.	Drawings PCH306, PCH307, and PCH308 have been revised. Refer to Adendum 9, Article 4.
9	214	Re Bid Item Quantity for Bit Item 6.75 grind existing Asphaltic Concrete wearing course of 1975 cy. This amount to 320,000 sf of Pavement at 2”. Kindly identify where this pavement is located. We believe the quantity is incorrect.	Item quantity has been revised. See highway plans for 10th Street, Delancey Street and FDR Drive reconstruction at the flood gate. Refer to Addendum 9, Article 2.
9	215	Please confirm if this project has a Buy America requirement?	The Buy America provision is not a HUD requirement and does not apply to this project.
9	216	Schedule A, Article 24, states guarantee period for tree planting of 24 months. When does the 24 month period begin? At the time of planting or substantial completion?	Refer to Article 24 of the Standard Construction Contract, in Volume 2.
9	217	Please clarify that the 700 +/- feet of the FDR Drive Service Road/On Ramp depicted on Contract Drawing PH002 as "CLOSED IN PHASE" is a long term closure. If yes, has the NYDOT been made aware and approved this long term lane/ramp closure?	Work on Montgomery Street between South Street and the Northbound FDR drive entrance ramp shall be performed in accordance with OCMC stips dated 2/13/20, Section II, Subsection B.
9	218	Please provide locations of 12" x 0.54" Micropiles	There are no 12" micropiles.
9	219	Please provide locations of 18" x 0.54" Micropiles	There are no 18" micropiles.
9	220	Addendum #5 has Item ESCR-552.11 20CT as both a new item and also a item to be removed. The quantity is the same. Please clarify if item ESCR-552.11 20CT is part of the bid or is to be removed.	Item ESCR-551.11 20CT was shown twice in Addendum 5 Attachment B in error—it should not have appeared in either section. The item is included in the bid schedule. Refer to Addendum 9, Article 2.
9	221	Addendum #05 Q&A #30 addressed all as-builts for existing structures are in Addendum #03-Article 3. Please provide location of the pedestrian bridge as-builts.	Refer to revised drawing G018 in Addendum 9, Article 4. Material added to Appendix A, which includes pedestrain bridge as-builts, is attached to Addendum 9.
9	222	Referencing Sheet 2217 of M&O Area 1 plans, note for bollard states "Steel Pipe Bollard, See Specs ESCR 737, Typ.". On Sheet 2219, note for bollard states "SS Pipe Bollard, See Specs ESCR 737, Typ.". Please clarify if these are galvanized powder coated steel or stainless steel bollards.	Bollards are galvanized powder coated steel. Drawings A-120.00 and A-130.00 have been revised. Refer to Addendum 9, Article 4.

CONSOLIDATED EDISON COMPANY OF NEW YORK, INC.
4 IRVING PLACE
NEW YORK, NEW YORK 10003

ENGINEERING INSTRUCTION

CE-TI-3356

PROCEDURE FOR WELDING AND INSPECTION OF REPAIRS ON PRESSURIZED 69, 138 AND 345 kV HIGH PRESSURE PIPE TYPE FEEDERS

REVISION 06

AUGUST 2018

Prepared By: *Arnold Wong* *8/13/2018*
Transmission Engineering/Date

SME Concurrence By: Ronald Pietrowski, approved by email 8/13/2018
Mechanical Engineering/Date

SME Concurrence By: Mark Bauer, approved by email 8/13/2018
Transmission Operations/Date

Approved By: Thomas Villani 8/15/2018
Section Manager, Transmission Engineering/Date

Effective Date: 8/15/2018

Paper copies of the Engineering Operations Manual are uncontrolled and therefore may be outdated. Please verify that you have the current version prior to use by viewing the Central Engineering website (http://ceng/).

TABLE OF CONTENTS

SECTION	SUBJECT	PAGE
1.0	SCOPE	3
2.0	TEST EQUIPMENT, SPECIALTY TOOLS AND SUPPLIES	3
3.0	PRECAUTIONS	3
4.0	PREREQUISITES	3
5.0	INSTRUCTIONS	3
5.1	INITIAL RESPONSE AND SPILL CONTAINMENT	3
5.1	TEMPORARY REPAIR METHODS	4
5.2	PERMANENT REPAIR METHODS	4
5.3	WELDING AND NON-DESTRUCTIVE TESTING	4
5.4	PRESSURE TESTING AND RECOATING	5
5.5	RECORDS	5
6.0	EXHIBITS	5
6.1	SPLIT SLEEVE REPAIR	5
7.0	REFERENCE	5

Paper copies of the Engineering Operations Manual are uncontrolled and therefore may be outdated. Please verify that you have the current version prior to use by viewing the Central Engineering website (http://ceng/).

1.0 SCOPE

1.1 This instruction provides the general requirements for the repair and welding procedures for 69, 138 and 345 kV high pressure pipe type feeders owned by the Consolidated Edison Company of New York, Inc., hereafter, the "Company" and:

1.1.1 Identifies all equipment and materials to be supplied and installed by the Contractor.

1.1.2 Identifies all equipment to be supplied by others and installed by the Contractor.

1.1.3 Identifies the location where the equipment and materials are to be installed by the Contractor.

1.1.4 Describes the conditions to be met for the installation of the equipment and materials.

2.0 TEST EQUIPMENT, SPECIALTY TOOLS AND SUPPLIES

2.1 None.

3.0 PRECAUTIONS

3.1 None.

4.0 PREREQUISITES

4.1 Repair welds on the pipe lines of 69 kV, 138 kV, and 345 kV high pressure pipe type feeders may be done with the feeders energized.

4.2 High speed circulation at full line pressure may be maintained during welding repairs provided the existing verified operating pressures are equal to or less than the following:

Pipe Dia. (in.)	Wall Thickness (in.)	Pressure (psig)
5-9/16	.258	1000
8-5/8	.250	600
10-3/4	.250	500

5.0 INSTRUCTIONS

5.1 Initial Response And Spill Containment

Paper copies of the Engineering Operations Manual are uncontrolled and therefore may be outdated. Please verify that you have the current version prior to use by viewing the Central Engineering website (http://ceng/).

PREVIOUSLY ANSWERED PBQ PAGE 87/150

5.1.1 When dielectric fluid is spilled into the environment, the organization making the initial response shall use every means possible to contain the spill and report it to the proper agencies. Catch basins, sewer inlets, manholes and other such openings shall be protected from the spill product by use of sandbags, temporary berms, or other dielectric fluid spill containment products. Dielectric fluid absorbent booms shall be deployed if there a possibility of such fluid entering a waterway.

5.2 Temporary Repair Methods

5.2.1 Upon location of the leak, a clamp shall be installed immediately. A clamp such as an Adams or Plidco clamp shall be used ***whe***re ***feasible.***

5.2.2 If repairs cannot be made immediately, the clamp shall be inspected on a ***periodic*** basis to determine its effectiveness.

5.3 Permanent Repair Methods

CAUTION

Permanent repair sleeves must be long enough to completely cover the corroded area. In no case shall welding be performed on a pressurized carrier pipe where the wall thickness at the point of welding is less than 3/16".

5.3.1 If the repair welding area shows signs of corrosion, the pipe wall thickness shall be ***visually inspected to determine if adequate thickness remains for welding. .*** Any areas found having a***n apparent*** wall thickness less than 50% of the original pipe wall thickness must be encased with a permanent repair sleeve***. If adequacy of the wall thickness cannot be determined based on visual inspection, the pipe wall thickness shall be ultrasonically tested in accordance with Con Edison's Specification CE-MS-1111, Ultrasonic Examination (latest revision).***

5.3.2 The following two types of sleeves ***are the preferred*** permanent repairs ***for feeder pipes and associated return lines:***

a. A Dresser Style 220 ***split*** repair sleeve with minimum wall thickness of 3/8 in.

b. A fabricated split sleeve, which is designed to span the leak area to an area of sound pipe material. ***D***etails and requirements ***are*** shown on Exhibit 1.

c. See Exhibit 2 for Barrel Weight Chart and General guidance on safe lifting limits.

Paper copies of the Engineering Operations Manual are uncontrolled and therefore may be outdated. Please verify that you have the current version prior to use by viewing the Central Engineering website (http://cengl/).

PREVIOUSLY ANSWERED PBQ PAGE 88/150

NOTE:

Other unique repair configurations may be required based on field conditions.

5.4 Welding And Non-Destructive Testing

5.4.1 All welders making welds on any ***pipe type*** cable pipe or return line shall be qualified in accordance with Con Edison Specification G-1065, "Qualifications of Welders and Welding Procedures," latest revision.

5.4.2 All welding shall be done using the shield metal arc process as per Con Edison Specification G-1064, "Shield Metal Arc Welding Procedure for Welding Steel Pipe and Fitting," latest revision.

5.4.3 All completed fillet welds and butt welds ***on repair sleeves welded over a leak*** shall be both visually and magnetic particle inspected in accordance with the requirements of API 1104, "Welding of Pipelines and Related Facilities". The Inspection shall be performed by a qualified NDE Contractor using procedures meeting the requirements above. Inspector qualifications and inspection procedures should be submitted for Engineering approval prior to use.

5.4.4 Any defect revealed by the visual or magnetic particle inspections shall be repaired and retested in accordance with Paragraph 5.4.3.

5.5 Pressure Testing And Recoating

5.5.1 ***All*** repair sleeve***s*** shall be pneumatically pressure tested to minimum of 50 psig. All welds are then to be examined by applying a water soap mixture and visually inspecting the welds for leaks. After testing, the small hole used for pressure testing shall be seal welded close.

5.5.2 Prior to backfilling, the repair shall be field cleaned and recoated in accordance with Con Edison Specification G-8209, ***Field Coating of Steel Pipe and Fittings for Buried Installation,*** latest revision.

5.6 Records

5.6.1 The following record of the leak and repair shall be made and stored by the Transmission Operation***s*** Department:

a. Feeder

b. Date leak is found and location

c. Time to clamp

d. Date leak is repaired, welder and inspectors identification.

Paper copies of the Engineering Operations Manual are uncontrolled and therefore may be outdated. Please verify that you have the current version prior to use by viewing the Central Engineering website (http://cengl/).

PREVIOUSLY ANSWERED PBQ PAGE 89/150

e. Repair method

f. NDE Inspection records

g. ***Leak Critique Report***

h. Date feeder is returned to service

6.0 EXHIBITS

6.1 Exhibit 1 – Split Sleeve Repair

7.0 REFERENCES

7.1 ***CE-MS-1111*** Ultrasonic Examination – Thickness Measurements for Flow Accelerated Corrosion and General Erosion and Corrosion

7.2 G-1064 ***Shield Metal Arc Welding Procedure for Welding Steel Pipe and Fitting***

7.3 G-1065 ***Qualifications of Welders and Welding Procedures***

7.4 G-8209 ***Field Coating of Steel Pipe and Fittings for Buried Installation***

7.5 API 1104 - Welding of Pipelines and Related Facilities

Paper copies of the Engineering Operations Manual are uncontrolled and therefore may be outdated. Please verify that you have the current version prior to use by viewing the Central Engineering website (http://ceng/).

PREVIOUSLY ANSWERED PBQ PAGE 90/150

EXHIBIT 1

SPLIT SLEEVE REPAIR

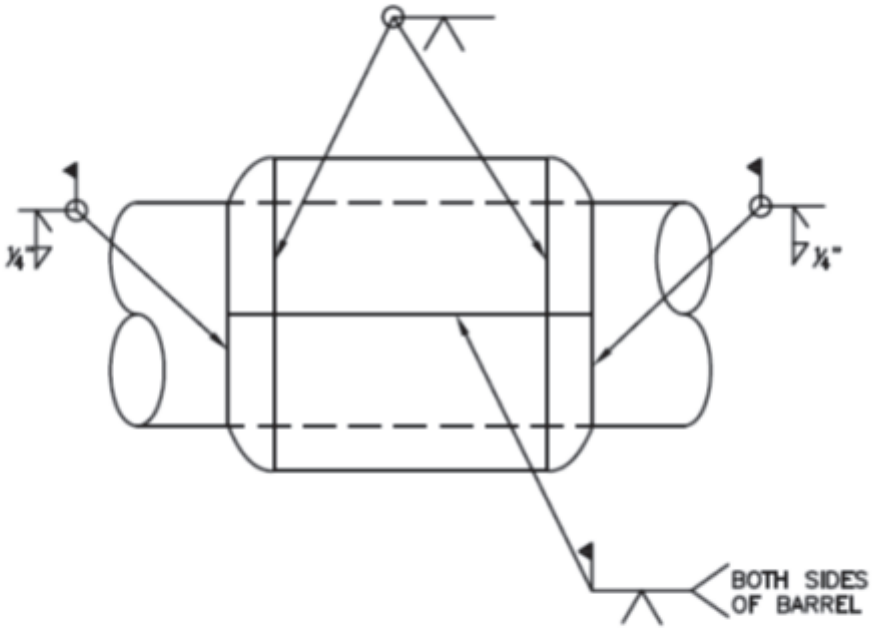

REPAIR SLEEVE

COMMON BOILER CAP SIZES AND BORE SIZE

1. 12” Boiler cap with 10 -7/8” bore for 10” feeders
2. 10” Boiler cap with 8-3/4” bore for 8” feeders
3. 6” Boiler cap with 5-5/8” bore for 5” feeders

Materials:

1. Boiler cap in accordance with ASTM A105 SCH 40
2. Pipe in accordance with ASTM A53 SCH 40

Paper copies of the Engineering Operations Manual are uncontrolled and therefore may be outdated. Please verify that you have the current version prior to use by viewing the Central Engineering website (http://ceng/).

EXHIBIT 2

Barrel Weight Chart









		Linear Footage of Barrel (pipe section) with boiler caps									
Size	**lb/lf**	**1**	**2**	**3**	**4**	**5**	**6**	**7**	**8**	**9**	**10**
4	5.395	9.145	14.54	19.935	25.33	30.725	36.12	41.515	46.91	52.305	57.7
5	7.31	14.06	21.37	28.68	35.99	43.3	50.61	57.92	65.23	72.54	79.85
6	9.485	19.235	28.72	38.205	47.69	57.175	66.66	76.145	85.63	95.115	104.6
8	11.18	29.18	40.36	51.54	62.72	73.9	85.08	96.26	107.44	118.62	129.8
10	14.02	44.02	58.04	72.06	86.08	100.1	114.12	128.14	142.16	156.18	170.2
12	24.78	69.78	94.56	119.34	144.12	168.9	193.68	218.46	243.24	268.02	292.8
14	27.285	81.285	108.57	135.855	163.14	190.425	217.71	244.995	272.28	299.565	326.85
16	31.29	91.29	122.58	153.87	185.16	216.45	247.74	279.03	310.32	341.61	372.9
18	35.295	116.295	151.59	186.885	222.18	257.475	292.77	328.065	363.36	398.655	433.95
20	39.3	151.8	191.1	230.4	269.7	309	348.3	387.6	426.9	466.2	505.5

< 50 lb

50 - 100 lbs

> 100 lbs

General guidance on using the chart is to perform the listed steps based on the color code identified below.

White: Barrel under 50 pounds that can be lifted by an individual.

Yellow: Barrels between 50 and 100 pounds will require a team approach to lift. To facilitate handling, these barrel should have handles welded on opposite sides.

Red: Barrels that exceed 100 pounds introduce a high risk when handling. These barrels should have an eye welded at top-center to facilitate lift. When practical, loading and unloading should be via mechanical means.

Paper copies of the Engineering Operations Manual are uncontrolled and therefore may be outdated. Please verify that you have the current version prior to use by viewing the Central Engineering website (http://cengl/).

PREVIOUSLY ANSWERED PBQ PAGE 92/150

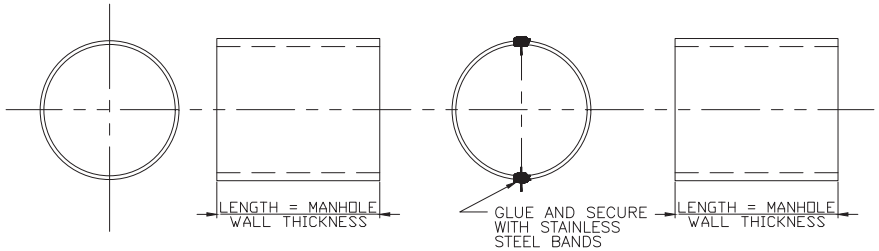

ONE PIECE SLEEVE
FOR NEW INSTALLATIONS

SPLIT SLEEVE
FOR USE WITH EXISTING H.P. PIPE CABLE

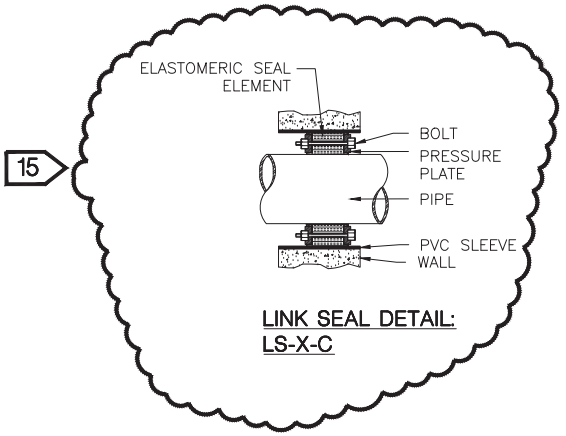

LINK SEAL DETAIL:
LS-X-C

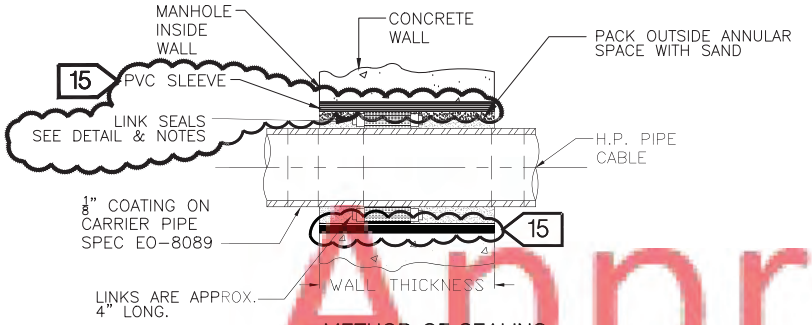

METHOD OF SEALING
SLEEVE AND LINK SEAL TABLE

SLEEVE AND LINK SEAL TABLE

ITEM NO.	PIPE O.D.	PVC SLEEVE O.D.	PVC SLEEVE W.T.	LINK SEALS QUAN LINKS	LINK SEALS MODEL NO.	LINK SEALS STOCK NO.*
1	6 5/8" 7" TUBING	0'-10 3/4"	0'-0 1/4"	10 8	LS-475-C LS-400-C	341-1006 341-0768
2	0'-8 5/8"	1'-0 3/4"	0'-0 1/4"	12	LS-475-C	341-1006
3	1'-0 3/4"	1'-4"	0'-0 1/4"	12	LS-425-C	341-0776
4	1'-2"	1'-6"	0'-0 1/4"	14	LS-400-C	341-0768
5	1'-4"	1'-8"	0'-0 1/4"	15	LS-400-C	341-0768
6	0'-10 3/4"	1'-2"	0'-0 1/4"	11	LS-425-C	341-0776
7	0'-5 9/16"	0'-8 5/8"	0'-0 1/4"	6	LS-425-C	341-0776
8	0'-4 1/2"	0'-6 5/8"	0'-0 1/4"	10	LS-300-C	341-0750

15

NOTE:
ALL PVC SHALL BE SCH 40

* STANDARD STOCK UNIT IS 10 LINKS PER PACKAGE.

NOTES:

1. WRAP THE LINK SEAL ASSEMBLY AROUND THE CARRIER PIPE AND CONNECT END LINKS TOGETHER.
2. SLIDE THE LINK SEAL ASSEMBLY INTO THE ANNULAR SPACE BETWEEN THE CARRIER AND THE CASING. SUPPORT CARRIER PIPES WITH SLINGS AS REQUIRED.
3. POSITION THE SEAL SO THAT THE FRONT EDGES OF THE PLASTIC PRESSURE PLATES ARE LOCATED 2" INSIDE THE END OF THE SLEEVE.
4.. START TO TIGHTEN THE BOLTS AT THE NARROWEST POINT AND PROGRESSIVELY TIGHTEN THE BOLTS ON EITHER SIDE OF THE NARROWEST POINT FOR 90°. DEGREES. THIS WILL TEND TO PUSH THE RUBBER TO THE WIDEST SPACE BETWEEN THE PIPES. TIGHTEN BOLTS IN THIS AREA UNTIL THE RUBBER STARTS TO FLOW BETWEEN THE PLASTIC PRESSURE PLATES. BOLTS SHOULD BE SNUG AT THIS TIME.
5. TIGHTEN THE REMAINING BOLTS UNTIL THE RUBBER STARTS TO FLOW BETWEEN THE PLASTIC PRESSURE PLATES.
6. TIGHTEN ALL THE BOLTS 360 DEGREES° IN ROTATION. THE AMOUNT OF EMBEDMENT OF THE PRESSURE PLATE INTO THE RUBBER INDICATES THE AMOUNT OF SEALING. WHEN THE PRESSURE PLATE IS WELL IMBEDDED IN THE RUBBER LINKS, EFFECTIVE SEALING HAS BEEN ACCOMPLISHED.
7. OVER-TIGHTENING OF THE BOLTS WILL BREAK THE PRESSURE PLATES.

APPLICATION:
TO PROVIDE A WATERTIGHT SEAL BETWEEN MANHOLE WALL SLEEVES AND H. P. PIPE TYPE CABLES.

SANDRESM1
ADDENDUM 7
SKETCH 1

REVISION
USE .1 SIZE TEXT ONLY

P. IANNONE	12
REMOVED PACKING JUTE W.J.T. 6/4/98	
	13
CHANGED SLEEVES TO PVC. P.N. 69987-OSXQ W.J.T. 5/24/05	
A. WONG	14
UPDATED DRAWING TO AUTOCAD FORMAT. W. AMBROSINO 09/2016	
A. WONG	15
REVISED DRAWING TO ADD 8TH ROW FOR THE SLEEVE AND LINK SEAL TABLE TO INCLUDE 4 1/2" O.D. PIPE SIZE. IDENTIFIED THE PVC SLEEVE IN DETAIL. ADDED LINK SEAL DETAIL. ISSUE FOR RECORD P/N: 27292-16 M. MARTINEZ 03-08-2017	

DWG. NO. EO-9230 -15

DWG. SIZE C	DWG. TYPE COMPANY
CON EDISON	STATION ALL STATIONS

BORO: ALL BOROUGHS

TITLE: SLEEVE DETAILS AND METHOD OF SEALING H.P. CABLE PIPE THROUGH MANHOLE WALL

CURRENT REVISION APPROVALS

ENGINEERING	
ENGINEER MANAGER:	<NOT REQUIRED>
DISCIPLINE ENGINEER:	A. WONG
DESIGN	
DESIGN MANAGER:	<NOT REQUIRED>
DESIGN SUPERVISOR:	O. SANCHEZ
DESIGNER:	M. MARTINEZ
DESIGN CHECKER:	H. TOM
SCALE: NONE	DISCIPLINE CODE: SK

COMPUTER GENERATED DRAWING NOT TO BE HAND REVISED

Approved

PREVIOUSLY ANSWERED RFIs PAGE 10/10

Addendum	Addendum Question No.	Bidder's Question	Response
10	1	Section A Description refers to drawings dated October 17, 2019 can the owner please provide these drawings associated with JB 117 and JB 118?	The JB pages have been revised to updated drawing reference to February 21, 2020. Refer to Addendum 10, Article 2.
10	2	Reference drawings TC184-194 – Construction of Floodwall and all work associated with it, from sta 95+00 – 102+34.87 – Will the agency consider giving the contractor extended weekend lane closures, utilizing the barrier configurations provided in the plans (2 lanes open to traffic in each direction), starting from Fri 10 PM straight thru to Monday 6 AM? If so, please provide the number of weekends allowed for bidding purposes.	The stipulations included in the bid documents will not be updated prior to bid. Note that the contractor must obtain all roadway closure permits from OCMC .
10	3	Vol. 3 of 3; ESCR 551-Steel Pipe piles require predrilling for the waterfront structure and along the FDR. The contractor is also expected to remove any bulkhead that interferes with steel pipe piles. Will the contractor, be paid under 551.03950017 for predrilling, and ESCR-6.27 TC for removal of timber cribbing rock-filled bulkhead when piles encounter obstructions?	The predrilling through the historic timber cribbing is included as part of the pile installation items, refer to items ESCR-551.24.05.CT, ESCR-552.11 20CT, ESCR-552.11 46CT for examples of items that include predrilling through timber cribbing. The partial demolition of the timber cribbing (paid under ESCR-6.27 TC) is only for tie rod or deadman installation and is shown on WS162. The predrilling through existing obstructions along the waterfront are included as part of the pile installation items, refer to items ESCR-551.36.05.CD, ESCR-552.11 4219CD, ESCR-551.36.05.CSD, ESCR-551.42.06 D for examples of items that include predrilling through waterfront obstructions. Any elements of the existing bulkhead that need to be removed are part of the corresponding esplanade type demolition numbers shown on WS140-WS149. As per the Construction Notes from the contract drawings, “Any obstructions encountered in the top 30’ of site clearance shall be removed by the contractor at no additional cost to the client”. The predrilled holes (Item 551.03950017) for the pedestrian bridge H-piles are intended to mitigate disturbance to adjacent existing utilities from pile driving.
10	4	Note #4 on SHT 2107 states “The 2” and 4” PVC Schedule 80 Conduit for the Grand Street Ferry Ductbank shall be paid for under unit price item PK-ESCR 675….” This conflicts what is said in Note #1 on SHT 2062 which states “Payment item PK-ESCR 658 is for electric service & distribution work at Grand Street Ferry. Shall include all service and distribution work, grounding rods, exothermic welds, service cabinet, trans ‘S’ 400 amp CT cabinet, service switch concrete duct bank with reinforcing steel, temporary electric and telephone service and all miscellaneous items & components required for complete installation” please advise where the Ductbank is to be included.	Item PK-ESCR 658 covers the complete installation of the Grand Street Ferry Electric service and associated work. See revised Note 4 on drawing PUE702. Refer to Addendum 9, Article 4.

Addendum	Addendum Question No.	Bidder's Question	Response
10	5	Please reference Bid Item 559.1690118. This bid item is only referenced on a few sheets, and is seemingly only utilized at the tops of the abutments and piers for the three pedestrian bridges, on Sheets BC122, BD140, and BT132. With the limits defined on these sheets, the bid item quantity is significantly low. Please indicate if the penetrating sealant is to be applied to all exposed vertical surfaces for all bridge abutments, piers, wing walls and structural walls.	The limits and quantities for Delancey, East 10th, and Corlears Hook are correct. This item shall also be applied to the existing pile caps along the esplanade. See drawing series WS600 to WS629.
10	6	Please reference Bid Item 567.50. This bid item does not appear in any of the drawings. Please indicate what this bid item pertains to.	Item 567.50 has been deleted. See Item 567.60 on drawing BC140. Refer to Addendum 10, Article 1.
10	7	Please provide the location for Item No. 585.01 Structural Lifting Operations-Type A in the contract drawings.	Item 585.01 has been deleted. Note 9 on drawings BD001 and BT001 has been revised to clarify that the cost for transporting and installing the tied arches will be included in the lump sum steel cost (items 564.0501 and 564.0502) as per specifications. Refer to Addendum 9, Article 2 and Addendum 9, Article 4.
10	8	Waterfront structure cross sections C-1, C-2, D-5, D-5A, D-6, F-2, F-4, G-6, and H-1 show the the Combi Wall assigned to two items, ESCR-552.11 4219C “COATED PAZ42/NZ19 OR EQUAL COMBI-WALL INSTALLED” and ESCR-552.11 4219CD “COATED PAZ42/NZ19 OR EQUAL COMBI-WALL INSTALLED IN PREDRILLED LOCATIONS". Please clarify what range (wall length) of the wall correspond to one item and what to the other item.	WS441A shows wall lengths and corresponding predrilling percentages. Contractor and Engineer must mutually agree on predrilling criteria before any predrilling operations occur.
10	9	Waterfront structure cross sections E-2, F-4 and F-6 show the the Pipe Pile Wall assigned to two items, ESCR-551.36.05.C “COATED 36 IN. DIAMETER X 0.5 IN. WALL THICKNESS STEEL PIPE PILE INSTALLED” and ESCR-551.36.05.CD “COATED 36 IN. DIAMETER X 0.5 IN. WALL THICKNESS STEEL PIPE PILE INSTALLED IN PREDRILLED LOCATIONS” Please clarify what range (wall length) of the wall correspond to one item and what to the other item.	The Cutoff Wall Schedule on drawing WS441A provides information for wall lengths and corresponding predrilling percentages. Contractor and Engineer must mutually agree on predrilling criteria before any predrilling operations occur.
10	10	Sheet 2272 for M&O Area 2 shows canopy foundations supported by HP 12x53 piles. Since we do not see a separated pay item for this size pile we assume they are to be included in the Lump Sum price for Item PK-ESCR 50B M+O Canopy Structure, Area 2. Please provide pile tip elevations.	The piles are in the lump sum price for item PK-ESCR 50B, and the estimated tip elevation of HP12x53 piles are -65'-0".
10	11	Please refer to Spec Section JB-123, A.1.2 states that the feeder pipes are 10” diameter and smaller. A.2.2 states that the feeder pipes are 5” and 10”. Drawing number 2782 shows four 6” pipes but does not give the dimensions of the other feeder pipes. Can you please provide the size of each feeder and return pipe?	The JB-123 specification has been revised. Refer to Addendum 10, Article 2.

Addendum	Addendum Question No.	Bidder's Question	Response
10	12	Please refer to Spec Section JB-123, B.2.4.1, please clarify this statement regarding the presense of ACM on the existing Transmission Feeders is the Contractor to assumed that each of the (8) Feeders and Return lines contain ACM?	The Contractor should always be aware of the possibility of the presense of ACM. Refer to attached document Con Edison Blanket Variance and the revised JB-123 specification in Addendum 10, Article 2.
10	13	Please refer to Spec Section JB-123, C.2.2 states that there is a time frame for completion in the Special Conditions. I could not find a time frame indicated in the Special Conditions. Can Con Ed provide the location/title of the file that this information is provided or provide the information as an answer to this question?	The JB-123 specification has been revised. Refer to Addendum 10, Article 2.
10	14	Please refer to Spec Section JB-123, D Method of Measurement references contract drawings dated December 2, 2019 under Project ID SANDRESM1. I did not find any drawings with that date. Can you provide the location of these prints or the files?	This reference is to older contract drawings. The JB-123 specification has been revised. Refer to Addendum 10, Article 2.
10	15	Please refer to Spec Section JB-123, Appendix IV Air Bubbles Repair 4 appears to be missing information. Can you please provide the information?	The JB-123 specification has been revised. Refer to Addendum 10, Article 2.
10	16	Please refer to Spec Section JB-123, Appendix IV Item 4 references attached drawings and SDS sheets for HDPE transitional wedges and caps. The drawings and SDS sheets were not attached, can you provide them?	The JB-123 specification has been revised. Refer to Addendum 10, Article 2.
10	17	Please refer to Spec Section JB-123, Appendix IV 8 refers to feeders and manholes that do not appear to exist on any of the prints we received. Are there additional prints of these areas? Are there manholes and high hats associated with this repair? If so, please provide the locations and details?	Conduit plates were provided as part of the joint-bid package by Con Ed. No further details about manholes and high hats related to repairs are available.
10	18	Please refer to Spec Section JB-123, Custom NCR Repairs Repair 4 references procedure CE-MS-3313, Rev 0 Appendix 4 Item 3. Can you please provide this information?	The JB-123 specification has been revised. Refer to Addendum 10, Article 2.
10	19	Section A.2.5 requires the contractor to follow an Inspection Test Plan (ITP). Please provide a copy of the project ITP.	See attached ITP.
10	20	Pay item 0580; JB-123(CE); Installation of Composite Carbon Fiber System Encapsulation of Underground Transmission Feeder and Return Lines. Please provide any anticipated additional cost associated with this minimum bid price of $24,000 per linear trench foot, not inclusive of the contract documents, specifications, approved installer, fabricator, and support operations required by the contractor.	Any additional costs would be caused by the Contractor's means & methods.

Addendum	Addendum Question No.	Bidder's Question	Response
10	21	The bid document provides minimal remedies for unforeseeable conditions which may be encountered during construction. Since this is not a Design-Build Project and Contractor is relying on the information provided by NYCDDC, we request allowance items be added to the schedule of values to address excessive risk items such as subterranean obstructions during pile installation and others. We can provide suggested allowance items at DDC's request and strongly believe this will result in a more competitive bid, where NYCDDC can keep and manage the contingencies more efficiently.	Additional items for addressing obstructions have been added via addendum. For example, the following new items were added: ESCR-203.12 PVD, ESCR--203.99 DSM, ESCR-2.FDO, and ESCR-5.1 OB.
10	22	Items ESCR WF1, WF2, WF3 and WF4 all has an Engineer's Estimate Quantity of 24 months, whereas the project duration is approximately 60 months. We understand that these facilities will not be needed for the entire 60 months project duration, however, 24 months appears to be grossly under estimated. Please clarify these apparent discrepancies.	Quantities for ESCR 7.13 WF2 and ESCR 7.13 WF4 have been revised. Refer to Addendum 10, Article 1.
10	23	Please confirm if Bid Item 44900 (ESCR-551.24.05.CT) "COATED 24"DIAX0.5"WALL STL PIPE PILE IN JET GROUT" should be in pre-drill location and if this pre-dill work is incidental to this Bid Item or is other pay Item.	In reference to item ESCR-551.24.05.CJG, refer to drawing FG272 for 14th Street crossing gate pile schedule. Refer to drawing F023, Note 2 for method of installation. All incidentals for installation shall be paid under item ESCR-551.24.05.CJG.
10	24	Bid Item ESCR-551.30.1 ST "STATIC COMPRESSION TESTING" was added in Addendum 6, but couldn't find it in the drawings. Can you Provide Details?	Item ESCR-551.30.1 ST can be found on drawing WS850. An additional test will be added at Pile location A-23 on drawing WS880.
10	25	Please clarify if ground improvement works (i.e. jet grouting, soil inclusions, stone columns, etc.) that require pre-drilling through the existing timber bulkhead as a prerequisite to installation, shall have their costs allocated in Item No. ESCR-6.27 TC?	Contractor shall confirm extent and existence of historic bulkhead structures. No ground improvement within areas designated on drawings is to be installed within the footprint of existing historic bulkhead structures after confirmation by contractor. In the event the contractor does not find historic bulkhead structures in areas as indicated on the drawings, ground improvement operations need to be included and will be paid under the standard ground improvement pay items; Item ESCR-5.1 for stone columns or item ESCR-5 for rigid inclusions.
10	26	There are conflicting lengths for Lintel L2 on Sheet No. 2480 and 2524. Please clarify.	Follow structural drawings for lintel lengths. Architectural drawings will be revised to match structural drawings.
10	27	On the Assembly Schedule of Sheet 2473, the description for F-01 indicates a different assembly from detail 1 on Sheet 2525. Please clarify which holds.	Please use the structural slab thickness, insulation, crushed rock, compacted soil. Please refer to architectural drawings for water proofing (WPS-01/02).

Addendum	Addendum Question No.	Bidder's Question	Response
10	28	Please confirm that the Load Transfer Platform (LTP), also referred to as the working pad in Specification Section ESCR-5.1 and pay item ESCR-5.1-LTP, is to be installed prior to Rigid Inclusion installation. Please clarify the elevation of the top of the LTP working pad.	There is flexibility regarding when the LTP gets constructed. The Contractor must use engineering judgement as to when to install the LTP. If the Contractor's preference is to install the rigid inclusions and then place the LTP, that would be acceptable. The top elevation of rigid inclusions is typically at +6' NAVD88, and the minimum thickness of the LTP is provided in the specification.
10	29	Detail C on Dwg. SM310 shows natural grade 2' higher than natural soil. Is natural grade the same as existing grade? Is intent to first excavate 2' below the existing grade across the entire soil mix area footprint, so that soil mix is installed from a working subgrade 2' lower? The spoils could then be used to bring the site back up to natural grade.	Yes, natural grade is existing grade. Intent is to excavate 2' below existing grade before installing DSM columns.
10	30	Is DSM intended on this project for mitigating heave-related soil movement, as discussed in Section B.3 of the specification? If not, can the laboratory mix design and production work delete the consolidation, free vertical swell, and linear shrinkage strain sampling/testing requirements?	Yes, those tests can be excluded, as the DSM option is NOT related to heaving mitigations.
10	31	Reference: Pier Type G, new backwall and existing pile cap. Per Drawings WS663 and WS514 (Pier Type G, Col. L. 13, 14, 98, 99), width of proposed backwall is 2"-0" or 2'-6" and width of existing pile cap is 4'-0" or 4'-10". Please clarify locations of different width of backwalls and existing pile caps.	Proposed piers 13, 14, 98, and 99 are type G piers. Existing piers 14, 98, and 99 are 4'-10" wide and will therefore have a 2'-6" wide backwall. Existing Pier 13 is 4'-0" wide and will therefore have a 2'-0" wide backwall.
10	32	Reference: Pedestal Elevations. Per Pedestal Elevation Summary Table on Drawing WS513, Piers 164(N) to 166(S), pedestal P1 elevation is 3.86, pedestal P2 elevation is 3.70 and pedestal P3 elevation is 3.55. However, per Drawing WS627 Top of Pile Cap Elevation is +5.36. Please confirm if this is correct.	Pier 164 has two different top of pile cap elevations (Reference drawing WS461). The south side (P164(S)) has a top of pile cap Elevation of 5.36' and the north side (P164(N)) has a top of pile cap Elevation of 3.36'. The pedestal elevations shown on WS513 are therefore correct. The "Top of Pile Cap El." Callout on WS627 should note, "3.36' at P164(N) only".
10	33	Please provide locations and depths for pay item 551.92000008: Removal of Piles	This information can be found in the Houston Street As-Builts.
10	34	Please define locations of pay item 552.13: Temporary Steel Sheeting	Location is shown on Excavation Support and Protection plans and sections drawings for Delancey, East 10th, and Houston. Drawings BC110 and BC111 will be revised to indicate temporary sheeting along the FDR Drive walkways and existing sewers.
10	35	Specification ESCR 559 Protective Coating for Waterfront Structure; please confirm only the esplanade, floodwall, and flood gate sheet and piles are the only foundation systems that require coating. Additionally, there is no coating for other pile-supported structures in the contract documents.	Refer to specification Section ESCR-559 for details on the structures that shall have protective coating for the waterfront and flood protection structures.
10	36	BID ITEM# 565.142000008 Please provide a Material Spec for the 1" Thick PTFE?	The material specifications for 565.142000008 can be found in the special NYSDOT specification as well as sections 565-2.01, 565-2.04 and 565-2.05. NYSDOT specifications are located online as described in the NYSDOT specification section of the Description Pages page PD-9.

Addendum	Addendum Question No.	Bidder's Question	Response
10	37	Addendum #5 revised the top of proposed cut-off wall pile elevations on the sewer crossing detail sheets WS770 and WS771 for NCM-60 and NCM-59, but no changes were made on the cut-off wall profile drawings WS400 series. Please clarify the extents of the new top of pile cutoff elevations shown from the sewer crossings.	Drawings WS400 to WS402 and WS770 will be modified to show a pile cap top elevation of 9.15'+/- from piers 2 to 5 and 12.07'+/- from piers 5 to 13. Drawings WS406 to WS407 and WS771 will be be modified to show a pile cap top elevation of 7.77'+/- from piers 27 to 28 and 7.27'+/i from piers 28 to 29.
10	38	L-Wall Platform 5 drawings WS885A shows elevations that differ from Sewer Crossing Detail sheet WS776 and Cutoff Wall Profile WS425. Please clarify which elevations are to be used.	Elevations shown on drawing WS885A are correct. Drawings WS776 and WS425 will be modified to match drawing WS885A.
10	39	Please clarify which item shall be used for lightpole foundations. Some WS903 drawings indicate ESCR-4.06 HP ES. Specification for PK-ESCR-662 calls for foundations to be included in the LED Lights. There are also SL pay items for lightpole foundations	Regarding the 106 esplanade light pole foundations shown on drawings WS329A through WS329H, and summarized in the bid schedule on drawing WS903A, bid items shall be in accordance with drawings WS903E through WS903J callouts. Appropriate bid items include: ESCR-4.06 HP ES, ESCR-4.14, ESCR-551.42.06, and ESCR-551.42.06.D, as appropriate and shown. For the new street lights found on the SL series drawings, please use item SL-20.02.10 for the foundations.
10	40	What Pay Item is to be used for the M & O Area 1 Canopy Steel and M & O area 2 Canopy Steel?	Item PK-ESCR 50A for Area 1 and item PK-ESCR 50B for Area 2.
10	41	See the “Sequence of Construction Single Stage Adjacent Beams or Slab Units” on sheet 944 of the contract drawings. Are the transverse tendons to be grouted into the 3” diameter precast tendon tube after being tensioned?	The transverse tendon ducts are to be grouted after tensioning. Grout to be placed inside the 3" dia. Precast tendon tube after tendons are tensioned with a grout meeting the requirements of section 4.6.4 and placed in accordance with section 8.6 of the Prestressed Concrete Construction Manual (PCCM). Drawing WS717 will be revised to include this note.
10	42	Plan sheets 224 and 350 show both the Delancey Street and East 10th Street bridges to be removed under item 202.120001. Are both of these bridges to be removed under the same pay item or should one of these bridges be removed under item 202.12002? NOTE: The Corlears Hook bridge is to be removed under item 202.120003.	Please note that the item numbers will be as follows: Item 202.120001 shall be for the Delancey St. Bridge and item 202.120002 shall be for the East 10th St. Bridge.
10	43	Drawings FG270 & FG271 indicate limits of excavation and controlled low strength material placed around the exisiting double barrel sewer. Please confirm the biditem under which this excavation is to be paid.	Excavation for structures shall be paid for under item ESCR-4.11 AS.
10	44	Addendum #05 added bid item ESCR-551.24.05 RS; Cutoff Wall L-Wall Platform drawings (e.g. Sheet 1016) has a 30" piles with a 24" Rock Socket, but the rock rocket is paid under ESCR-551.30.01 RS. Which locations of the 24" piles requires rock sockets?	Item ESCR-551.30.01 RS covers the installation of 24" diameter rock sockets inside the 30" diameter pipe piles. Drawing WS880 will be revised with correct item ESCR-551.30.01 RS.
10	45	Addendum #05 added bid item ESCR-551.42.06; please provide locations of this new bid item	Refer to drawing WS903I for item ESCR-551.42.06.
10	46	There are existing contour lines shown on both site grading plans LG300 & LG301 and erosion control plan ESC101, for reaches A & B, in the Pier 42 park project site. These contour lines do not match, please advise which is the correct plan.	The site grading drawings LG300 & LG301 are correct and match the anticipated/actual grading at Pier 42. Drawings LG300 and LG301 should be referenced for site grading drawings in Reaches A & B at the Pier 42 park project site.

Addendum	Addendum Question No.	Bidder's Question	Response
10	47	Refer to plan SM318. The detail states that the target settlement value for the pre-loading is shown on drawings SM302-SM309. However, these plans do not show any target settlement value. Will the target settlement value be provided?	Settlement contours will be added to drawings SM302 to SM309.
10	48	New Rock Socket pay items for 30IN and 36IN pipe pile in Addendum #05 and #06, please clarify in what circumstances rock socket is required for pipe pile, please state the location and detail for rock socket.	Item ESCR-551.30.01 RS can be found at the L-wall locations; refer to drawings WS619A, WS625, and WS627 to WS629. Item ESCR-551.36.05 RS can be found at the cut-off wall segment in front of the Williamsburg Bridge; refer to drawing WS610.
10	49	Sheet 585 and Sheet 597 ; Addendum #05; Stationing for Independent Floodwall in Reach C starts at 28+00. Sheet 585 stipulates that all floodwall from 23+82 - 31+25 is now AZ46 Press In Method, has this system changed? Additionally Sheet 597 is not legible.	F402 is correct. From STA. 23+82 to 28+00, the floodwall is AZ46 Press In Method. Drawings F402 and F603 show AZ20 for the sheeting between STA 28+00 and STA 31+25. Additionally, the installation method is not required to be press in for the AZ20 sheeting installed within the park. F603 (Sheet 597) was replaced in Addendum 10, Article 3.
10	50	Sheet 827 states Interlock sealant applied to cutoff wall starting at sta 58+52. Sheet 695 states Interlock sealant applied from sta 61+20. Which detail is correct?	Any mention of interlock sealant on WS126-WS127 will be removed. Refer to WS433 (Sheet 827) for correct limits of interlock sealant, as well as WS441A Cutoff Wall Schedule for detailed breakdown of interlock sealant extents.
10	51	Ref Dwg WS607A. The item PK-ESCR 937 Horticultural Drainage Layer has been deleted from every section except the one shown on WS607A. Is this item deleted? Or do the labels need to be added back into the sections? Please clarify and adjust bid item quantity as necessary.	PK-ESCR 936 has been removed from the estimate and drawing WS607A will be revised to remove item PK-ESCR 9337A and callout for the horicultural drainage layer.
10	52	Special Provisions; Article B15 Us Army Corps of Engineers Requirements; paragraph D states pile driving activities that occur during the presence of ESA - listed species, the permittee shall ensure the use of a vibratory hammer. If the use of an impact hammer is practical, 20-minute soft starts will commence. Will the approved Army Corp permit now state no water work unless inside a cofferdam from March 1st – June 30th?	USACE Provisional Permit Special Conditions (B) requires that installation of cofferdams in areas shallower than 6 meters is avoided between January 15 - May 31. There are no seasonal in-water work restrictions for pile driving, sheet pile installation, or other in-water construction activities. Contractors shall comply with requirements regarding pile driving activities and turbidity controls specified in Special Conditions (C) and (D) and further discussed in correspondence with NOAA NMFS dated 9/19/2019. Contractors should be advised that there may be additional conditions attached to the forthcoming NYSDEC Section 401 Water Quality Certification or waiver.
10	53	The contract documents and specifications do not stipulate any cofferdam installation (other than outfalls) for the demolition or construction of the Esplanade, Cutoff wall, or any other elements of the Waterfront Structure. Will new drawings show the anticipated cofferdams for these activities?	No, no additional drawings will be provided for cofferdam installation for demolition or construction for the waterfront structures. Contractor shall determine the necessity of use of cofferdam as part of their means and methods. Costs for installation shall be accounted for in their bid.

Addendum	Addendum Question No.	Bidder's Question	Response
10	54	Will the new Army Corps permit allow the contractor to perform any in-water activities outside potential cofferdams from January to June? E.g., spudding of barges, movement of barges, material delivery, any work disturbing the mudline such as the cutting of timber or steel piles, or any other requirements for the project?	USACE Provisional Permit Special Conditions (B) requires that installation of cofferdams in areas shallower than 6 meters is avoided between January 15 - May 31. There are no seasonal in-water work restrictions for pile driving, sheet pile installation, or other in-water construction activities. Contractors shall comply with requirements regarding pile driving activities and turbidity controls specified in Special Conditions (C) and (D). Contractors should be advised that there may be additional conditions attached to the forthcoming NYSDEC Section 401 Water Quality Certification or waiver.
10	55	Special Provisions; Article B15 Us Army Corps of Engineers Requirements; paragraph E, O, P, and R explicitly states the requirements of turbidity management for all in-water work. In Addendum 2 issued by the NYC DDC, sheet 666, the agency deleted all in water-sediment control measures. As the contractor is required to abide by the US Army Corps permit stipulations, the agency has removed all specific notes associated with maintaining these requirements. What was the intent of eliminating these notes?	Please follow specification section ESCR 9.30 for erosion and sediment control. Notes were eliminated to avoid conflicts.
10	56	Please verify that the installation of the proposed cut-off wall is not considered a cofferdam; therefore all work associated with the sheeting wall is excluded from the restrictions outlined in Special Provisions; Article B15 Us Army Corps of Engineers Requirements; paragraph C and D. It is the bidder's understanding that a turbidity curtain is all that is required, but this assumption requires the clarification requested in the previous question.	Installation of the proposed cut-off wall is not considered a cofferdam. Contractors shall comply with requirements regarding pile driving activities and turbidity controls specified in Special Conditions (C) and (D). Contractors should be advised that there may be additional conditions attached to the forthcoming NYSDEC Section 401 Water Quality Certification or waiver.
10	57	Please note that drawing PUD705 in the "Park Utilities- drainage & sanitary details" indicates we have mini-piles below various structures and pipes. The notes indicate we refer to NYCDEP standard drawing SE6 for details on the foundation. However, this NYCDEP drawing contains information on timber piles. Please provide the quantity and size of mini-piles along with the grout material for structures and pipes shown in PUD001. In addition, the depths are provided on PUD705, however, please confirm we are to use these depths for drilling.	Please refer to the NYCDEP Standard Drawing SE6 for reference, but substitute the timber pile for the mini pile. Please refer to NYCDEP Specification 70.13 MN for materials. Yes, use depths provided on PUD705.
10	58	On drawing PUD004 , network 1200 shows both STR-1202 and STR-1203 have a FDS and HDS structure type. As per note # 5 on the same page, these structures are installed on pipe supported caps. However, drawing PUD703 shows a cross section detail of these two structures but does not show any foundation elements. Please clarify.	Drawing PUD703 will be revised to show piles.
10	59	Addendum #06; Please provide locations of Rock Socket for 36" Diameter x 0.5" piles, along with limits of ESCR-551.36.05 C Pipe Piles	Rock sockets for 36" dia x 0.5" piles are installed between piers 46 to 51. Refer to drawing WS441A for pile schedule along cut-off wall.
10	60	Addendum 6 added pay items 4.02 CA, 7.07B, but these items cannot be found on the drawings. Please clarify where they are used.	Item 4.02 CA is for FDR Drive pavement reconstruction, see drawing FG245. Item 7.07B is for the East River Housing Parking Lot, drawing BD207B, and Montgomery Street parking lot FG139.

Addendum	Addendum Question No.	Bidder's Question	Response
10	61	Drawing BD207A labels removal of existing landscaping as needed and existing street tree pit under item PK-ESCR- 1190 Clear and Grub. No such item exists, and Addendum #6 removed item PK-ESCR 190 Clear and Grub. Please clarify which pay item is to be used.	Use item 6.01 AC.
10	62	Drawing BC171 refers to "PC Series" for highway sidewalk improvements at Corlears Hook along the FDR. No such drawings exist. Please clarify restoration for this area.	The PC series is covered under a separate contract. This work is not included in the SANDRESM1 contract. Drawing BC171 will be revised from "PC Series" to "under a separate contract".
10	63	In reference to the proposed 3'x5'-6"RCFT Combined sewer in Reach G detailed by DS411 connecting the existing Junction Chamber to JC-G01. Can further detail be provided of the existing sewer that this sewer ties into?	The existing Junction Chamber (S014M) is to be removed per drawing DS106. The proposed 3'-0" x5'-6" will be connected to a new, proposed junction chamber JC-G01. There is an existing sewer shown on the survey feeding into the existing junction chamber from the North that does not exist. This was confirmed by recent dye test. The proposed junction chamber only services the 3 proposed sewers shown on drawing DS411 and detailed further on drawings DS537 to DS538.
10	64	Reference drawings BD207E and BD207F. The 8ft chain link fence shown has 3 strands of barbed wire. However, in the specifications for Item PK-ESCR 712 and PK-305 for chain link fence items it does not mention this. Please clarify applicable pay items for 8ft fence with 3 strands of barbed wire as shown on BD207E and BD207F	See drawing BD207B-01 that calls out the 8 ft high fence with barbed wire to be paid for under item 6.34 AD. The barbed wire on the gate is paid for under the gate item PK-ESCR 715A
10	65	Please note we cannot locate any 18 inch micropiles as indicated in bid item ESCR-551.993.1800 or the pile load tests required for such piles. Please clarify where these piles are	Please refer to Addendum 10, Article 1 for the current bid schedule, which does not contain item ESCR-551.993.1800.
10	66	Please note we cannot locate any 12 inch micropiles as indicated in bid item ESCR-551.993.1200 or the pile load tests required for such piles. Please clarify where these piles are	Please refer to Addendum 10, Article 1 for the current bid schedule, which does not contain item ESCR-551.993.1200.
10	67	Please clarify what cost is to be included in bid item ESCR-5.TP, Stone Column Test Program. Do we include the SPT testing for stone columns here? The specifications are also not clear on whether we have to install test stone columns. If there are, where and how many are there?	The cost to be included in item no. ESCR-5.TP is to include the installation of approximately six stone columns initially. These are requested to be installed close to the water edge at Reaches C, D, E, or F at an agreed upon area between the Contractor and the Engineer, so potentially they will be production stone columns. Refer to ESCR 5.08 (H). After the installation, the Contractor will be required to perform either SPT borings or CPTs as required by ESCR 5.12 (B), and will be required to prepare a report with the results as required by ESCR 5.06 (D) and (E).
10	68	On Sheet 1487, for Structure STR-11005, does Structure Type MH-4 refer to NYC DEP SE-25 or -27 for pile details?	Structure Type MH-4 refers to the NYC Parks Standard structure. Refer to Drainage/Sanitary Structure Pile Cap Detail on PUD705 for Pile Details.

Addendum	Addendum Question No.	Bidder's Question	Response
10	69	Specification Section ESCR-5.1 – Ground Improvement with Rigid Inclusions, section 5.1.11.D calls for Pile Integrity Testing (PIT) on 25% of all installed Rigid Inclusions. Since the RI top elevation is below the LTP/working platform, exposing the RI will require slow and careful digging through said platform to prevent cracking or damaging the column. The RI must then be grinded smooth and level before PIT testing can occur. The 25% requirement is an extremely high testing percentage that will create logistical challenges and inflate costs. Will a lower percentage, like 5%, be accepted?	As discussed in PBQ V-07, there is flexibility regarding when the Contractor constructs the LTP. If the preference is to place the LTP after the rigid inclusions construction, that will be an acceptable option. If the Contractor uses this approach, then the top of the rigid inclusions can be leveled with a trowel after completion of the construction, while the grout is still wet. PIT testing must be performed on 25% of the rigid inclusions as specified, however, the Contractor may submit a VECP per the requirements of the S-Pages for a revised level of PIT Testing.
10	70	The Area Replacement Ratios for both the Stone Columns and Rigid Inclusions is extremely high for mass treatment. Are the designs prescriptive or performance based?	The design is prescriptive, however, we do ask the Contractor to verify the adequacy of the constructed ground improvement.
10	71	Specification Section ESCR-2 Part 2.04 (C) alludes to more than one (1) test section, which is reasonable given the amount of jet grout that is to be installed across a site extending over 2.5 miles. Please provide a quantity of test sections that shall be performed for bidding purposes only. Presumably, there should be one (1) test section for every one (1) to two (2) reaches, depending on the quantity of jet grout columns to be installed in each reach.	Ideally, the jet grouting test area will be performed in the general area of 14th and 15th Streets. However, since this area is very congested, performing the jet grout test area in the park at an area agreed upon between the Contractor and the Engineer will be the most reasonable approach. It is anticipated that the test area will be in Reach I or J. It is anticipated that only one test area is necessary.
10	72	Thermal Integrity Profiling (TIP) is an alternative method of testing Rigid Inclusion integrity that does not require exposing or leveling the top of the RI and produces more consistent and accurate results than PIT. Will TIP testing be an acceptable alternative to PIT, and if so, will a lower testing percentage, like 5%, be accepted?	The Contractor may submit a VECP per the requirements of the S-Pages for a revised level of PIT Testing. The testing to be performed, whether PIT or TIP, shall be performed on 25% of the rigid inclusions, unless a VECP is sumitted to revise the level of testing.
10	73	Are driving shoes required on steel pipe piles? They are not referenced in spec ESCR-551 or shown on drawings.	Predrilling at various locations is assumed where obstructions may be encountered and has already been accounted for in the cost estimate by assumed predrilling percentages found on the Contract Drawings. Driving shoes are not required. It is up to the contractor to stiffen the piles as they see fit if necessary after preaguring. Contractor shall provide method of installation to be approved by Engineer.
10	74	Dwg. WS141 calls out cutting some timber piles to elevation -8.0' and some to mudline (as does WS111, although it's not clear which get cut to mudline and which to -8.0 from this drawing). Does this timber pile demo fall under bid item ESCR-6.27 TP or bid item ESCR -6.27 PRSE? Note there is no mention of piles of any type in Note 5 on WS141.	Exisitng timber piles that are cut at mudline or above are to be paid under item ESCR-6.27 PRSE. Any existing timber piles to be pulled out completely shall be paid under item ESCR-6.27 TP.

Addendum	Addendum Question No.	Bidder's Question	Response
10	75	Dwg. WS165 shows pile caps 71, 105 & 114 for partial demolition and repair of pile caps. In the corresponding plan view drawings WS102 (pile cap 71) WS104 (pile cap 105 & 114) pile caps differ from details shown on WS165, please clarify pile cap numbers.	"The Waterfront Demolition drawings (WS100 through WS107) show the existing (as-built) pier numberings. Drawing WS165 shows the proposed pier numberings (Renumbered to account for pier demolitions and additions). Note 2 will be added to drawing WS165 with information on pier number conversion: -Existing pier 81 = Proposed pier 71 -Existing pier 122 = Proposed pier 105 -Existing pier 128 = Proposed pier 114.
10	76	Dwg. WS 166 shows pile cap 77 for partial demolition and repair. The corresponding plan view drawing WS103 the pile differs from detail shown on Dwg. WS166. Single bent supported pile cap shown on plan view drawing not two pile bents supporting as shown on Dwg. WS166. Please clarify pile cap number.	"The Waterfront Demolition drawings (WS100 through WS107) show the existing (as-built) pier numberings. Drawing WS165 shows the proposed pier numberings (Renumbered to account for pier demolitions and additions). Note 5 will be added to drawing WS166 withinformation on pier number conversion: -Existing pier 86 = Proposed pier 77 -Existing pier 87 = Proposed pier 78
10	77	Dwg. WS147 Section H is taken from WS 104 at Pile Cap 112 and depicts 12 plumb timber piles and 3 battered timber piles. 3 of the 12 plumb timber piles are shown under an existing concrete deck inshore of existing cutoff wall. However, at pile cap 112 Drawing WS121 shows 9 plumb timber piles and 3 batter timer piles and only two plumb timber pile under the concrete deck. Please clarify these discrepancies and whether in general the plan views or sections should govern for timber pile removals.	The estimated existing timber piles are based on historical record which may contain discrepencies with existing site conditions. Contractor shall verify number and location of existing timber piles in the field. Please refer to the plan views. Historical drawings suggest the existing timber pile layout is 3 batter + 12 plumb south of the fire boat house and 3 batter + 9 plumb at and north of the fire boat house.
10	78	Drawing WS718 detail C shows an Elastomeric Bearing Pad Type E.P. between the concrete deck slab and the cut-off wall and indicates to see detail 3 on WS681. When looking at detail 3 on WS681, that bearing is indicated as a sliding joint (more detail on WS761), not an Elastomeric Bearing Pad Type E.P. Please verify.	Elastomeric bearing type E.P callout will be removed from Drawing WS718. See detail 3 on drawing WS681 for more information on the sliding joint.
10	79	Please specify the size of the hole to be drilled into the superstructure for the #8 bearing anchor rod in pier types J and K (Dwg WS665).	Hole size is specified on drawing WS665 as 1.75" DIA.
10	80	Please specify the diameter for the #10 diaphragm rod that is embedded into the Type E.P. Bearing and pile cap because it is not stated in drawings WS708-713.	The #10 diaphragm rod that is embedded into the Type E.P. Bearing and pile cap is a standard #10 rebar with a nominal diameter of 1.27".
10	81	There are no anchor details for the tide pool armor, does it just get laid in place?	Yes, the tide pool armor is surrounded by riprap armor stone and does not need to be anchored.
10	82	WS619 (and similar cross sections) – show 2 layers of 110-154 lbs stone for overall mat thickness of 1'-11". This density will likely require 15" stone, so achieving the thickness may not be physically possible, Confirm if smaller stone is acceptable or if thicker mat is necessary.	The armor layer thickness (1'-11") was based on the rock sizing stability calculation of 2 layers of D50 nominal armor size of about 11.2".
10	83	What are the lengths of the eco sea pillars, if they vary please provide bathymetric survey so we can estimate the lengths.	Estimated mudlines are provided in the WS600 drawing series. For the south embayment, refer to WS603. For the north embayment, refer to WS618.

Addendum	Addendum Question No.	Bidder's Question	Response
10	84	Are the historical/previous borings available (for example W-3 on page B-WS-001)	Historical borings were provided in Addendums 3 and 9.
10	85	Confirm hanging leads are acceptable as they are a standard industry practice in waterfront/marine construction. Spec section 551.05.A states fixed leads are required.	Specification Section ESCR-551.05.(A) provides for conditions and requirements for the use of hanging leads, refer to the 6th paragraph. It is expected that waterfront and marine piles may not be able to be installed using fixed-lead type driving equipment.
10	86	It is not possible to estimate the amount of each type a or type b, quantity of excavation, or quantity of specific details required for the anode installation. Please provide additional information as to the anticipated quantity of each type to be installed and provide a separate bid item for underwater excavation by CY.	Note 3 on WS901 will be revised as to include an assumed excavation quantity of 422 CF. This minimal excavation shall be included in the payment item 60.29 for anode installation. No separate bid item is provided. In general, excavation for anodes is not required except in rare cases where a deep-water pile-mounted anode needs an additional 6” or 12” to fit. Similarly, anode installation types A and B are both paid under item 60.29 and have the same unit cost.
10	87	Confirm that every single pile is bonded with a bonding strap, it is unclear if that is the intention in all bents.	"The following notes will be added to the drawings to clarify the bonding requirements: Drawing WS900: 5. SEE DRAWING WS901 FOR METHOD OF BONDING PILES TO EACH OTHER. Drawing WS901 6. ALL PIER PILES SHALL BE BONDED TOGETHER AS SHOWN ON THIS DRAWING. SEE WS902 FOR DETAILS. 7. ALL LAND-SIDE PIER PILES (""C"" OR ""E""), WITH THE EXCEPTION OF PIERS 30-51 AND PIERS 128-163, SHALL BE BONDED TO A BULKHEAD PILE. SEE DRAWING WS902A THRU WS902C FOR BONDING METHOD OF PIER PILES WHICH ARE NOT BONDED TO THE BULKHEAD. Drawing WS902A 2. ALL LAND-SIDE PIER PILES FROM PIER 30 TO 51 AND FROM PIER 128 TO 163 SHALL NOT BE BONDED TO THE BULKHEAD PILES."
10	88	Adddendum 3 did not provide any historical drawings about location and details of timber crib wall from E4th St to E15th St. Can you please provide?	Historic drawings are only available up to 4th Street. The existing crib bulkhead line is assumed to be timber crib following the bulkhead line prior to construction of the park in the 1930s.
10	89	On Sheet 520, Load Testing Note #1 references one uplift load test and one compression load test on an instrumented sacrificial pile located between Sta. H 104+04 - Sta. H 107+00 and Sta. H 111+50 - Sta. H 113+00. a) Does this mean a total of 2 sacrificial test piles, 1 between Sta. H 104+04 - Sta. H 107+00 and 1 between Sta. H 111+50 - Sta. H 113+00? b) Is 1 of the 2 test piles to be used for the compression load test only, while the other test pile is used for the uplift load test only?	a. Yes, total of 2 sacrificial test piles, 1 between Sta. H 104+04 - Sta. H 107+00 and 1 between Sta. H 111+50 - Sta. H 113+00. b. Yes, one test shall be a compression load test, and the other an uplift load test.

Addendum	Addendum Question No.	Bidder's Question	Response
10	90	Static pile load testing is paid for under Item 551.50220017. A total of 3 load tests are listed under the bid quantities for this item. The uplift load test at Pier 2 at Delancy Street constitutes 1 load test (uplift). This would leave a total of 2 tests at Houston Street Bridge. Does this mean only 1 compression test and 1 uplift load test will be performed at the Houston Street Bridge, since 1 of each is required in Load Testing Note #1 on Sheet 520?	Yes, only 1 compression test and 1 uplift load test will be performed at the Houston Street Bridge.
10	91	Sacrificial test piles shall be paid under Item 551.99301239. Typically, reaction piles are installed in combination with the test pile as part of a compression load test. Are the reaction piles to be sacrifical as well, and are they paid under the same Item 551.99301239?	Yes, reaction piles are to be sacrificial as well and will be paid under the same item 551.99301239.
10	92	Micropile Note 7 on Sheet 520 addresses micropile casing splices. It is the state of the practice to use flush-joint threaded casing for micropiles. Since the casing ends are machined by removing material to create the threads, the threaded casing joint does not have the same cross-sectional area as a full casing section and calculations cannot show these threaded joints to have equal or better structural capacity in bending. Is an inner casing (or equivalent added steel section) required in the upper 30' of cased pile length to supplement the threaded joints?	Yes, inner casing (or equivalent added steel section) is an acceptable alternative in the upper 30' of the cased pile length to satisfy Micropile Note 7 on Sheet 520.
10	93	Micropile Note 3 on Sheet 520 allows for use of domestic mill secondary casing (non-prime casing) as the permanent casing for Houston Street Bridge micropiles. However, Bid Item 551.99450017, which references permanent casing for micropiles, is the complementary bid item to Bid Item 551.99301239. Under the Specification Section for Bid Item.99450017, Part 'Materials', Paragraph A, it explicitly states that 'Mill secondaries cannot be used for permanent casing'; thus domestic prime pipe can only satisfy this requirement. Please confirm whether domestic prime pipe with mill certificates or domestic mill secondary casing with coupon tests is to be used as permanent casing for Bid Item 551.99450017.	Micropile Note 3 on Sheet 520 shall take precedence and therefore, the contractor may elect to use domestic mill secondary as the permanent casing for item 551.99450017.
10	94	Refer to material index on drawing G502- the table mentions specification 09 32 00 for Norman EB think brick units- BRK-02. However we could not find specification 09 32 00 in contract specification. Please provide this specification.	Specification call out on drawing is incorrect, refer to specification section 04 00 00. Note on drawing G502 will be revised.
10	95	Please confirm stay-in-place formwork is acceptable for forming the soffit of the cast-in-place esplanade deck shown on typical sections on WS680-82.	The Contractor must follow the requirements found in specification section ESCR-4.06. Stay in place forms are not acceptable as per the 4.06 Concrete in Structures specification. A VECP per the requirements of the S-Pages may be submitted for stay-in-place falsework.
10	96	Specification ESCR 3.05 calls for Marine concrete to have 5/8” or ¾” coarse aggregate. Please confirm if 3/8” aggregate is acceptable for pile infill.	No, the Contractor must bid as shown.

Addendum	Addendum Question No.	Bidder's Question	Response
10	97	Drawing WS539E shows bents 105-107 as a “two span – 5 girder”, but drawing WS539F shows bents 105-107 as a “two span – 6 girder”. Please clarify.	Estimated mudlines are provided in the WS600 drawing series. For the south embayment, refer to WS603. For the north embayment, refer to WS618.
10	98	For esplanade demolition (all ESCR 6.27... bid items) please provide record design and/or as-built drawings of the existing esplanade so means and methods for demolition can properly be estimated. For example, how is existing concrete seawall end cap tied into the rest of the structure? What are bearing details for hollow core slabs, is there rebar from pile caps tying them in to rest of structure, etc.?	Refer to Addendum 3 for esplanade as-builts.
10	99	For bidding purposes, please confirm what load rating during construction is for portions of completed esplanade deck.	See revised Note 12 in esplanade design criteria section of drawing WS002 for construction loading. Refer to Addendum 9, Article 4.

NEW YORK STATE OF OPPORTUNITY. Department of Labor

Andrew M. Cuomo, Governor
Roberta L. Reardon, Commissioner

September 16, 2019

Con Ed of NY Inc.
4 Irving Place 15th Floor
NY, NY 10003

RE: File No. 19-1211

Dear Sir/Madam:

STATE OF NEW YORK
DEPARTMENT OF LABOR
DIVISION OF SAFETY AND HEALTH

The attached is a copy of Decision, dated, 9/16/2019, which I have compared with the original filed in this office and which I DO HEREBY CERTIFY to be a correct transcript of the text of the said original.

If you are aggrieved by this decision you may appeal within 60 days from its issuance to the Industrial Board of Appeals as provided by Section 101 of the Labor Law. Your appeal should be addressed to the Industrial Board of Appeals, State Office Building Campus, Building 12, Room 116, Albany, New York, 12240 as prescribed by its Rules and Procedure, a copy of which may be obtained upon request.

WITNESS my hand and the seal of the
NYS Department of Labor, at the City of
Albany, on this day of 9/16/2019.

Edward A. Smith, P.E.
Professional Engineer 2 (Industrial)

STATE OF NEW YORK
DEPARTMENT OF LABOR
STATE OFFICE BUILDING CAMPUS
ALBANY, NEW YORK 12240-0100

Variance Petition

of

Consolidated Edison Company of New York, Inc.
Petitioner

in re

Premises: Consolidated Edison Utilities
Electrical Feeders – System Wide
Locations Throughout New York City and
Westchester County, New York

Coal Tar Wrapped Electrical Feeders

File No. 19-1211

SYSTEMWIDE
DECISION

Cases 1- 5

ICR 56

The Petitioner, pursuant to Section 30 of the Labor Law, having filed Petition No. 19-1211 on September 13, 2019 with the Commissioner of Labor for a variance from the provisions of Industrial Code Rule 56 as hereinafter cited on the grounds that there are practical difficulties or unnecessary hardship in carrying out the provisions of said Rule; and the Commissioner of Labor having reviewed the submission of the petitioner dated September 06, 2019; and

Upon considering the merits of the alleged practical difficulties or unnecessary hardship and upon the record herein, the Commissioner of Labor does hereby take the following actions:

Case No. 1	ICR 56-8.8(a)
Case No. 2	ICR 56-11.6(b)(2)
Case No. 3	ICR 56-8.8(c)
Case No. 4	ICR 56-8.8(i)
Case No. 5	ICR 56-8.8(k)

VARIANCE GRANTED. The Petitioner's proposal for wrapping coal tar wrap on electrical feeders from system-wide locations throughout New York City and Westchester County of New York State in accordance with the attached 19-page stamped copy of the Petitioner's submittal, is accepted; subject to the Conditions noted below:

THE CONDITIONS

1. As written with modifications as noted.

2. Usage of this variance is limited to those asbestos removals identified in this variance or as outlined in the Petitioner's proposal.

In addition to the conditions required by the above specific variances, the Petitioner shall also comply with the following general conditions:

GENERAL CONDITIONS

1. A copy of this DECISION and the Petitioner's proposals shall be conspicuously displayed at the entrance to the personal decontamination enclosure.

2. This DECISION shall apply only to the removal of asbestos-containing materials from the aforementioned areas of the subject premises.

3. The Petitioner shall comply with all other applicable provisions of Industrial Code Rule 56-1 through 56-12.

4. The NYS Department of Labor Engineering Service Unit retains full authority to interpret this variance for compliance herewith and for compliance with Labor Law Article 30. Any deviation to the conditions leading to this variance shall render this variance Null and Void pursuant to 12NYCRR 56-12.2. Any questions regarding the conditions supporting the need for this variance and/or regarding compliance hereto must be directed to the Engineering Services Unit for clarification.

5. This DECISION shall terminate on **September 30, 2021.**

Date: September 16, 2019

ROBERTA L. REARDON
COMMISSIONER OF LABOR

By

Edward A. Smith, P.E.
Professional Engineer 2 (Industrial)

PREPARED BY: Mark G. Wykes, P.E.
Professional Engineer 1 (Industrial)

REVIEWED BY: Edward A. Smith, P.E.
Professional Engineer 2 (Industrial)

Consolidated Edison Company
of New York, Inc.
4 Irving Place, 15th Floor NE
New York NY 10003
www.conEd.com

191211

September 6, 2019

New York State Department of Labor
Division of Safety & Health - Engineering Services Unit
State Office Campus
Building 12, Room 154
Albany, New York 12240

Re: Petition for System-Wide Blanket Variance
Consolidated Edison Company of New York, Inc.
Enclosure Abatement Method for Use on Coal Tar Wrapped Electrical Feeders.
Locations throughout New York City and Westchester County, New York

Dear Sir or Madam:

Consolidated Edison Company of New York, Inc. ("Con Edison") respectfully requests a variance of Industrial Code Rule 56 (12 NYCRR 56) for the enclosure of asbestos-containing coal tar wrap on electrical feeders. This is a renewal of Variance No. 16-1044, approved on September 12, 2016.

BACKGROUND

The abatement of asbestos-containing coal tar wrap is necessary in order to refurbish Con Edison Electric Feeders. Historically, when refurbishing our electrical feeders, we have removed the coal tar wrap outright. Going forward, Con Edison anticipates greatly increasing the rate of feeder refurbishment and consequent coal tar wrap abatement. The current manual removal methods are proving inefficient for the higher quantities, and we have been researching alternative methods that will allow for the feeder refurbishment to be completed in a timely manner. We therefore propose to enclose, rather than remove the coal tar wrap using the means and methods described in the next section.

PROPOSED ABATEMENT METHODS

CON EDISON'S PROPOSED ABATEMENT PROCEDURES

We propose using the following procedures for the enclosure of Coal Tar Wrap for use with the refurbishment of electrical feeders:

1. A regulated area shall be established around the excavation containing the exposed coal tar wrapped feeder. A remote mobile decon will be utilized. All work with exposed coal tar wrap shall be performed by NY State-certified asbestos handlers and/or supervisors.
2. A six-mil poly drop cloth shall be installed beneath the coal tar wrapped electrical feeder to be abated on the current shift.
3. Abatement workers shall remove any loose coal tar wrap that may interfere with properly enclosing the remaining wrap, using our previously approved procedures for coal tar wrap under NYSDOL File No. 18-0706 attached). The coal tar wrap on the feeder will then be wet wiped to remove dust and debris that could interfere with the enclosure process.
4. A band of coal tar wrap, up to four feet in length, shall be removed to expose bare steel on both ends of the coal tar wrap subject to the enclosure procedure. This is necessary in order to complete subsequent steps of the feeder refurbishment process. This removal shall be done in a

non-friable manner using methods per our existing NYSDOL blanket variance for removal of coal tar wrap (NYSDOL File No. 18-0706, attached).

5. Certified asbestos handlers shall then apply a layer of epoxy sealant using manual methods over the coal tar wrap (direct manual application using appropriate protective gloves and/or with brushes).
6. Once the coal tar wrap is coated and air tight, the asbestos abatement portion of the work is complete. Further steps in the feeder refurbishment process may be conducted by non-asbestos certified workers.

In order to conduct the abatement in the manner described, Con Edison requests relief from the subparts of ICR 56 described in the table below:

VARIANCE JUSTIFICATION FOR REGULATORY RELIEF

Regular ICR 56 Requirements	Justification for Relief	Alternative Proposal
56-8.8(a): All enclosure abatement projects shall be conducted within a regulated work area per Subpart 56-7.	The coal tar wrap is non-friable and located in an exterior excavation.	As this enclosure abatement involves exterior, non-friable material, we request to establish a regulated work area per Subpart 56-11.6(b) in lieu of the normally required subpart for enclosures, except for 11.6(b)(2), as noted below.
56-11.6(b)(2): Regulated abatement work area preparation shall be in compliance with…section 7.4 **56-7.4(c):** Posting of Asbestos Warning Signs	The coal tar wrap is non-friable and located in an exterior excavation. Posting of warning signs at entrance(s) to the work area will create undue alarm to the public.	Asbestos warning signs as required by OSHA shall be posted inside the clean room of the remote decontamination vehicle
56-8.8(c): Loose or hanging ACM…shall be removed in accordance with Subpart 8.4	The coal tar wrap is non-friable and located in an exterior excavation.	Any loose coal tar wrap on the section to be enclosed, and, as noted in the proposed procedures, a 1-linear foot band of coal tar wrap shall be removed on either side of the enclosed section, utilizing our previously-approved DOL coal tar wrap blanket variance procedures (File No. 15-0774, attached).
56-8.8(i): Encased/enclosed asbestos material shall be conspicuously marked or labeled in order to warn persons of its presence.	The coal tar wrapped material is located in exterior excavations. Upon final completion of the overall feeder refurbishment project, the excavation will be backfilled and the work site returned to regular usage. The refurbished feeders shall remain buried underground indefinitely. Any labeling is unlikely to remain intact in the event of a future excavation project, rendering labeling of ACM impractical.	Non-certified workers conducting post-abatement refurbishment activities shall have OSHA asbestos awareness training and be notified of the presence in ACM beneath the epoxy enclosure. All Con Edison equipment in excavations is assumed to contain asbestos unless confirmed otherwise.

Regular ICR 56 Requirements	Justification for Relief	Alternative Proposal
56-8.8(k): Final cleaning and clearance sampling for all enclosure projects shall be in accordance with 56-9.	The coal tar wrap is non-friable and located in an exterior excavation.	As this enclosure abatement involves exterior, non-friable material, we request to comply with the following two subparts in lieu of the normally required subparts for enclosures: Subpart 56-11.6(a) – no air sampling required, unless material is rendered friable Subpart 56-11.6(c) – one stage of final cleanup procedures

Con Edison believes that following these proposed alternative methods and procedures will comply with the spirit and intent of Industrial Code Rule 56, and should not in any way compromise the health and security of the general public, facility employees, or workers involved with the removal of these materials.

Thank you for your consideration of this request. If you have any questions or require additional information to process this application, please do not hesitate to contact me by telephone at (212) 460-1132 or by e-mail at morrisonw@coned.com.

Sincerely,

William H. Morrison
Asbestos Response Team
Environment, Health and Safety
Asbestos Project Designer – License No. 98-13545

Attachments:
File No. 18-0706
Previously-Approved Variance Petition 16-1044
Required fee, payable to the NYS Department of Labor

191211

161044

Consolidated Edison Company
of New York, Inc.
4 Irving Place
New York NY 10003
www.conEd.com

September 4, 2018

Mr. Edward A. Smith, P.E.
Asbestos Control Bureau
New York State Department of Labor
State Office Campus
Building 12, Room 454
Albany, NY 12240

APPROVED

New York State Dept. of Labor
Engineering Services Unit

Re: Request for Extension of System-Wide Variance File #16-1044
Expires September 30, 2018

Premises: Con Edison Utility Systems
Throughout New York State

Coal Tar-Wrapped Electrical Feeders

Dear Mr. Smith:

Consolidated Edison Company of New York, Inc. ("Con Edison") respectfully submits this letter to request a one-year extension for the system-wide variance referenced above.

The abatement of asbestos-containing coal tar wrap is necessary in order to refurbish Con Edison Electric Feeders. Con Edison anticipated greatly increasing the rate if feeder refurbishment and subsequent coal tar wrap abatement. The enclosure of coal tar wrap in-place has proven effective in completing the refurbishment of our electrical feeders with while reducing the disruption of high vehicle traffic volumes in the affected locations.

Con Edison thanks the New York State Department of Labor for their consideration in this matter. Should you have any questions concerning this project, or if anything contained in this letter does not meet with your approval, please call me at (212) 460-1132, or via e-mail at morrisonw@coned.com

Sincerely,

William H. Morrison
Asbestos Compliance Group
Environment, Health and Safety

STATE OF NEW YORK
DEPARTMENT OF LABOR
STATE OFFICE BUILDING CAMPUS
ALBANY, NEW YORK 12240-0100

Variance Petition

of

Consolidated Edison Company of New York
Petitioner

in re

Premises: Consolidated Edison Utilities
Gas Mains and Electrical Conduit - Systemwide
Locations throughout New York City and Westchester County, New York

Coal Tar Wrapped Piping/Conduits

File No. 18-0706

SYSTEMWIDE DECISION

Cases 1-12

ICR 56

The Petitioner, pursuant to Section 30 of the Labor Law, having filed Petition No. 18-0706 on June 5, 2018 with the Commissioner of Labor for a variance from the provisions of Industrial Code Rule 56 as hereinafter cited on the grounds that there are practical difficulties or unnecessary hardship in carrying out the provisions of said Rule; and the Commissioner of Labor having reviewed the submission of the petitioner dated May 29, 2018; and

Upon considering the merits of the alleged practical difficulties or unnecessary hardship and upon the record herein, the Commissioner of Labor does hereby take the following actions:

Case No. 1	ICR 56-1
Case No. 2	ICR 56-2
Case No. 3	ICR 56-3
Case No. 4	ICR 56-4
Case No. 5	ICR 56-5
Case No. 6	ICR 56-6
Case No. 7	ICR 56-7

Case No. 8	ICR 56-8
Case No. 9	ICR 56-9
Case No. 10	ICR 56-10
Case No. 11	ICR 56-11
Case No. 12	ICR 56-12

VARIANCE GRANTED. The Petitioner's proposal for removal of coal tar wrap on gas, steam, fuel oil and electrical piping/conduit from system-wide locations throughout New York City and Westchester County of New York State in accordance with the attached 10-page submittal (including the attached Con Edison procedure), is accepted; subject to the Conditions noted below:

THE CONDITIONS

1. In addition to the submission of the notification form as required for large projects by ICR 56, Con Edison shall submit the appropriate notification fee, as required by Article 30, Section 904-2 of the New York State Labor Law.

2. A copy of the notification information supplied to the New York State Department of Labor for each asbestos project shall be maintained by the Petitioner for a minimum period of 30 years.

3. The petitioner shall maintain from the date of issuance of this decision, as part of its permanent business records, the quantities and original location of all removed pipe and pipe abandoned in place where coal tar coating is or was used as a pipe covering.

4. The petitioner shall keep as part of its permanent records, a roster of the names and employee identification numbers of all supervisors and employees who have any function relating to abatement of coal tar coating from coal tar coated gas/water pipes. Such records shall be kept available for a minimum period of 30 years.

5. All affected workers conducting coal tar pipe coating removal operations pursuant to the provisions of OSHA 29 CFR 1926.1101, shall be required to wear hard hats, protective glasses, construction type gloves and any other personal protective equipment as required by OSHA 29 CFR 1926 while performing the work. Workers shall also be instructed, as follows:

   a. Construction rags and gloves used in the removal of coal tar coating gas/water pipe removals shall not be allowed to commingle with similar materials on vehicles used in conjunction with the removal process.

b. All tools utilized in this activity shall be kept clean and in good repair.

c. When gloves and rags used in removal projects are no longer ultimately needed or useful, such items shall be properly disposed of as asbestos waste in accordance with ICR 56.

6. Worker training shall be in accordance with the requirements of OSHA 29 CFR 1926.1101 for all personnel performing this type of abatement work.

7. All workers and supervisory personnel of Con Edison who conduct activities involving the removal or disturbance of coal tar pipe coating shall receive further training, prior to commencement of such work, relating to the nature of the coal tar coating. The minimum training shall be a four (4) hour oral presentation, and shall include the nature of the coal tar coating, mandated removal efforts, scope of the previous coal tar coating removal study, and the conclusions reached in this study. A copy of the conclusions reached in previous study shall be supplied to all trainees attending the training and a copy of the entire study shall be made available to trainees upon their request.

8. Records identifying all personnel receiving such training outlined above shall be maintained by the petitioner for a period of 30 years.

9. All abatement or maintenance operations performed by Con Edison personnel, shall be in accordance with all provisions of OSHA 29 CFR 1926.1101 for this type of abatement work

10. The Petitioner shall require by contractual provision that all outside contractors providing services related to the removal of, or providing services affecting coal tar pipe coating, observe all requirements, including recordkeeping, relative to the removal and/or maintenance of coal tar coating as instituted for employees of said petitioner.

11. All outside contractors shall comply with all requirements of OSHA 29CFR 1926.1101 for the removal or disturbance of coal tar pipe coating.

12. The Petitioner shall require by contractual provision that all outside contractors provide worker training in accordance with the requirements of OSHA 29 CFR 1926.1101 for all personnel performing this type of abatement work.

13. Coal tar coated pipes which are removed from below ground shall be disposed of as asbestos-containing material by appropriate legal method.

14. Coal tar coating removed from below ground facilities shall be disposed of as asbestos-containing material by appropriate legal method.

15. Coal tar coating and coated pipelines removed from aboveground (bridge) locations shall be disposed of as asbestos-containing material by appropriate legal method.

16. Aboveground coal tar coated pipelines and coal tar coating removed from above ground locations shall be removed from the work site as soon as practical soon so as to avoid unnecessary material damage.

17. Usage of this variance is limited to those asbestos removals identified in this variance or as outlined in the Petitioner's proposal.

In addition to the conditions required by the above specific variances, the Petitioner shall also comply with the following general conditions:

GENERAL CONDITIONS

1. A copy of this DECISION and the Petitioner's proposals shall be conspicuously displayed at the entrance to the personal decontamination enclosure.

2. This DECISION shall apply only to the removal of asbestos-containing materials from the aforementioned areas of the subject premises.

3. The Petitioner shall comply with all other applicable provisions of Industrial Code Rule 56-1 through 56-12.

4. The NYS Department of Labor Engineering Service Unit retains full authority to interpret this variance for compliance herewith and for compliance with Labor Law Article 30. Any deviation to the conditions leading to this variance shall render this variance Null and Void pursuant to 12NYCRR 56-12.2. Any questions regarding the conditions supporting the need for this variance and/or regarding compliance hereto must be directed to the Engineering Services Unit for clarification.

5. This DECISION shall terminate on June 30, 2020.

Date: June 5, 2018

ROBERTA L. REARDON
COMMISSIONER OF LABOR

By

Edward A. Smith, P.E.
Professional Engineer 2 (Industrial)

PREPARED BY: Edward A. Smith, P.E.
Professional Engineer 2 (Industrial)

REVIEWED BY: Ravi Pilar, P.E.
Professional Engineer 1 (Industrial)

191211

180706

Consolidated Edison Company
of New York, Inc.
4 Irving Place
New York NY 10003
www.conEd.com

May 29, 2018

New York State Department of Labor
Division of Safety & Health - Engineering Services Unit
State Office Campus
Building 12, Room 154
Albany, New York 12240

Re: Petition for General Variance
Consolidated Edison Company of New York, Inc.
Coal Tar Wrapped Pipe Insulation and Conduits
Gas Mains, Steam Mains, and Electrical Conduit – Systemwide
Locations throughout New York City and Westchester County, New York

Dear Sir or Madam:

Consolidated Edison Company of New York, Inc. ("Con Edison") would like to re-apply for our system-wide coal tar wrapped pipe insulation and conduits abatement process that was previously approved by the New York State Department of Labor (NYSDOL) per file # 15-0774. The said approval will expire on June 30, 2018. Specifically, Con Edison would like to ask for relief from the same Industrial Code Rule (ICR) 56 (12 NYCRR § 56) subsections previously granted:

- ICR 56-1
- ICR 56-2
- ICR 56-3
- ICR 56-4
- ICR 56-5
- ICR 56-6
- ICR 56-7
- ICR 56-8
- ICR 56-9
- ICR 56-10
- ICR 56-11
- ICR 56-12

Con Edison would like to note that this request is for our Gas, Steam, Fuel Oil Piping, and Electrical Distribution/Transmission System, as reflected in your previous Decision (#15-0774).

Con Edison respectfully requests and would appreciate an expeditious review of this petition. If you have any questions or require additional information to process this application, please do not hesitate to contact me by telephone at (212) 460-1132 or by e-mail at morrisonw@coned.com.

191211

180705

Thank you for your attention and consideration of this request.

Sincerely,

William H. Morrison
Asbestos Response Team
Environment, Health and Safety
Asbestos Project Designer 98-13545, expires 8/31/2018

Attachments:

Con Edison procedure for Coal Tar Wrap Removal
Decision of Variance Approval 15-0774, dated June 26, 2015
Required Fee

Coal Tar Wrap Removal - Gas, Electric, And Fuel Oil and deluge piping

6.4.1 Applicability

This procedure applies to the removal of coal tar wrap (CTW) from Con Edison equipment. All wrapping is to be handled as asbestos-containing material (ACM) unless testing has been performed and establishes that the material is not ACM. This procedure applies only to projects involving abatement of 25 linear feet or less of CTW on one block within New York City and less than 260 linear feet of CTW outside of New York City. The total amount of ACM removed includes any quantity removed intact on piping as well as material removed from the pipe.

Coal Tar Wrap is considered contaminated with PCBs in addition to asbestos unless sampling proves otherwise. For coal tar wrap in Transmission Operations manholes, additional precautions may be needed if the piping is painted. See your Asbestos Coordinator or local EHS staff for further guidance.

6.4.2 Pre-work Requirements

At a minimum, workers require OSHA Asbestos Awareness/Hands-On Coal Tar Wrap Removal Training.

In New York City, a certified NYS/NYC asbestos supervisor must be available to respond to the site if required; a NYS asbestos supervisor must be available in Westchester.

A copy of the Con Edison variance package must be available for review on the primary vehicle being used at the abatement location. This package includes:

1. Letter of Application to NYCDEP and the NYSDOL for Coal Tar Wrap
2. Current NYCDEP and NYSDOL Approvals for Coal Tar Wrap
3. Current Con Edison New York State Asbestos Handling License

Any removal of CTW must follow the NYC DEP and NYS DOL variances.

PREVIOUSLY ANSWERED PBQ PAGE 123/150

6.4.3 Personal Protective Equipment

For situations where the possibility of contact is possible, the use of protective clothing is recommended. Both asbestos containing arc proof material and polychlorinated biphenyl (PCB)-containing oil may be encountered in electrical manholes and other areas. Before beginning work, determine what potential hazards may exist. Refer to GEHSI S5.01 – Selection of Personal Protective Equipment to determine the minimally acceptable personal protective equipment based on the potential hazards present at the work site.

In addition CTW abatement requires that the following PPE be used:

- Disposable coveralls, i.e., Tyvek® or equivalent
- Head and foot covers
- Eye protection
- Disposable gloves (latex or nitrile)
- For CTW with PCBs, skin contact should be avoided.

NOTE: Employees shall contact their supervisor if they are uncertain about the selection of proper PPE.

6.4.4 Tools and Materials

- Amended water solution
- 6-mil (minimum) plastic sheeting
- 6-mil (minimum) plastic asbestos disposal bags
- Disposable rags or wipes
- Mastic sealer and/or duct tape
- Hand tools (chipping hammer, chisel, scraper, or putty knife)
- Abrasive pads
- barrier tape

CAUTION: Do not use any type of power tool, grinder, sander, or burning apparatus to remove CTW

6.4.5 Work Procedure

- Set up the stanchions, telescoping rails, barricades, or barrier tape around the perimeter of the manhole or excavation.
- Place 6-mil plastic sheeting under the work area (main, conduit or cable) to collect loose debris.
- Wet down CTW with amended water.

PREVIOUSLY ANSWERED PBQ PAGE 124/150

191211
180706
150774

- Use hand tools only to break away the large chunks of wrap. Place the removed wrap in a plastic asbestos disposal bag.
- Remove only the amount of wrap necessary for the work operation.
- Ensure that the intact CTW on the pipe is not damaged when removing the pipe from the excavation. In order to ensure that this does not occur, do not use chains to remove a CTW covered main or pipe.
- Likewise, ensure that intact CTW is not damaged when moving or transporting pipe.
- For pipe left in the ground, seal all ends of exposed wrap with mastic sealer, wax tape, or duct tape. Plastic wrap and duct tape all coated pipes that will be removed from the site.
- In the event that some wrapping material did not fall onto the plastic sheeting (e.g. during a severe leak episode) collect these pieces and place them on the sheeting.
- Once the CTW removal is completed and the exposed ends are sealed, fold the plastic sheeting in on itself and place it in a properly labeled asbestos disposal bag.
- Wet-wipe all equipment with amended water and rags before removal from the work area.
- Place used rags and old work gloves in asbestos disposal bags.
- Ensure that bagged ACM is wet before transporting.

6.4.6 Disposal

<u>For Asbestos-only CTW (non PCB):</u>

- Double-bag all waste materials. The outside bag must have an asbestos label with the work location identified.
- Complete an asbestos waste tracking form and attach it to the bag.
- Place double-bagged waste and removed pipe in a truck and transport to workout location.
- Bring double-bagged waste and tracking forms to Stores. Ensure that the bags are placed in a properly labeled 55-gallon drum for disposal as asbestos waste.
- Place the removed pipe into a bin labeled "INDUSTRIAL WASTE - CONSTRUCTION AND DEMOLITION LANDFILL ONLY". The pipe shall then be sent to a New York State landfill that will accept such material as construction debris.

PREVIOUSLY ANSWERED PBQ PAGE 125/150

Additional Considerations for PCB/Asbestos CTW

- Follow instructions above, however, the removed wrap shall be disposed of at your workout location as PCB/Asbestos waste. CTW Pipe may be disposed of as either PCB/Asbestos Waste or Bulk Product Waste; contact your local EHS staff for assistance prior to disposal.

6.4.7 Advice and Counsel

Contact the area Asbestos Coordinator for advice and counsel regarding this procedure and other asbestos related concerns prior to the start of any projects.

191211
180706
15077.

Coal Tar Wrap Removal – Steam

6.5.1. Applicability

This procedure applies specifically to the removal of coal tar wrap (CTW) from the housing of the spiral weld steel casing utilized by Steam Operations. All such wrapping is to be handled as if it is asbestos containing material (ACM) unless testing has been performed and establishes that the material is not ACM.

This procedure provides an overview of, and is not intended to replace the requirements of the Steam Engineering Department's Procedure S-11924.

This procedure only applies to the removal of less than or equal to 25 linear feet of CTW material on one city block or as specified by NYC DEP approved procedures. The amount of material removed includes any quantity removed intact on piping as well as material removed from the pipe.

6.5.2. Pre-work Requirements

At a minimum, workers require NYC/NYS handler certification.

A copy of this Con Edison procedure must be available for review in the decon vehicle being used at the abatement location. This package includes-

1. Copy of Current Con Edison New York State Asbestos Handling License

The asbestos supervisor must be on-site for all asbestos activities and must be familiar with and must thoroughly understand the requirements of the Steam Engineering Dept. Procedure S-11924 including its attachments

6.5.3. Personal Protective Equipment

For situations where the possibility of contact is possible, the use of protective clothing is recommended. Both asbestos containing arc proof material and polychlorinated biphenyl (PCB)-containing oil may be encountered in manholes. Before beginning work, determine what potential hazards may exist. Refer to GEHSI S5.01 – Selection of Personal Protective Equipment to determine the minimally acceptable personal protective equipment based on the potential hazards present at the work site.

NOTE: Employees shall contact their supervisor if they are unsure about the selection of proper PPE.

PREVIOUSLY ANSWERED PBQ PAGE 127/150

191211
180706
1507

6.5.4. Tools and Materials

- Amended water solution
- 6-mil (minimum) fire-retardant plastic sheeting
- 6-mil (minimum) plastic asbestos disposal bags
- Disposable rags or wipes
- Mastic sealer, spray glue, duct tape or wettable cloth lagging
- Hand tools required to perform the task (e.g. chipping hammer, chisel, scraper or putty knife)
- Asbestos warning signs

CAUTION: Do not use any type of power tool, grinder, sander, or burning apparatus to remove CTW

6.5.5. Work Procedure

- Establish a regulated area, using opaque plastic sheeting to prevent public access.
- Personal air monitoring shall be performed in accordance with the requirements of the OSHA standard 29 CFR 1926.1101.
- Wet down CTW with amended water.
- Remove CTW using hand tools only (that is, hammer and scraper) and amended water.
- Dispose of CTW as ACM in a properly labeled bag.
- Once the CTW removal is completed and the exposed ends are sealed, fold the plastic sheeting in on itself and place it in a properly labeled asbestos bag.
- Wet-wipe all equipment with soapy water and rags before removal from the work area.
- Place used rags and old work gloves in asbestos waste bags.

To remove steel casing after the CTW removal, worker shall:

- Cut a small hole in casing.
- Insert water hose and thoroughly wet insulation.
- Cut steel casing.

PREVIOUSLY ANSWERED PBQ PAGE 128/150

Workers shall then don the following PPE if not already being worn:

- Disposable coveralls
- Disposable head and foot covers
- Disposable gloves (latex or nitrile)
- Half-face respirator with HEPA filters
- Eye protection

The following steps shall then be followed:

- Remove steel casing.
- Thoroughly wash the steel casing within the excavation.
- Inspect the steel casing to ensure that there is no insulating material adhering to it.
- Dispose of shoe covers, coveralls, and respirator filters as ACM. Clean respirators with amended water.
- Wet down and double bag all waste materials. Ensure that all ACM waste is wet before transporting.

6.5.6. Disposal

- Ensure that the outside bag has an asbestos label affixed that identifies the work location.
- For waste going to a Con Edison facility, complete an Asbestos Waste Tracking Form.
- Place double-bagged waste in the Con Edison vehicle and transport it to the temporary storage area at a Con Edison facility.
- Return Asbestos Waste Tracking Form to the Asbestos Coordinator with monitoring data.

PREVIOUSLY ANSWERED PBQ PAGE 129/150

Dispose of the casing as follows:

- If strips of CTW were removed to cut casing, seal disturbed CTW with duct tape, double-wrap and label the casing in 6-mil fire-retardant plastic sheeting.
- Dispose of casing as ACM following the steps provided above, or dispose of cleaned casing (all CTW removed) as construction debris.

For Contractor Abatement Crews:

- Complete a Waste Disposal Manifest which will be used to track ACM.
- Bagged ACM must be removed from the work site by a licensed waste transporter.

The ACM waste must be disposed of in accordance with all applicable federal, state, and local laws and regulations.

6.5.7. Advice and Counsel

Contact the area Asbestos Coordinator for advice and counsel regarding this procedure and other asbestos related concerns.

PREVIOUSLY ANSWERED PBQ PAGE 130/150

CONSOLIDATED EDISON COMPANY OF NEW YORK
INSPECTION TEST PLAN
COMPOSITE CARBON FIBER FOR ENCAPSULATION

Process	Activity	Inspection		Acceptance Criteria	Governing Standard	Documentation	Responsibility				
							CE Constr	Applicator	QC Inspector	NACE Inspector	CE Eng
Design	Vendor Qualification	Hoop (Circumferential Wrap)		Con Edison Approved Vendor	CE-MS-3500-28062-18 & ASME PCC-2	Approved Testing	M	M	R	R	A
OEM Certification for Project Personnel	Training	Two Day Training Class		Successfully Complete Class	CE-MS-3500-28062-18 & ASME PCC-2	OEM Certification	M	P	P	P	V
Material Control	Material Receiving	Carbon Fiber	Material Type & Condition	FRP CF 500-BD Shipping Label & Receipt & No Physical Damage. Validate Expiration Date	Advanced FRP CF 500-BD TDS CE-MS-3500-28062-18	Certificate of Compliance Material Receiving Report	V	W/R	V	V	
		High Strength Epoxy Adhesive #1	Material Type & Properties	FRP Tack Coat 110 HT Shipping Label & Receipt. Validate Expiration Date	Advanced FRP CF 500-BD TDS CE-MS-3500-28062-18	Certificate of Compliance Material Receiving Report	V	W/R	V	V	
		High Strength Epoxy Adhesive #2	Material Type & Properties	FRP 120 HT Shipping Label & Receipt. Validate Expiration Date	Advanced FRP CF 500-BD TDS CE-MS-3500-28062-18	Certificate of Compliance Material Receiving Report	V	W/R	V	V	
		Fiberglass Fabric	Material Type & Condition	FRP GF 300-BD Shipping Label & Receipt & No Physical Damage. Validate Expiration Date	Advanced FRP CF 500-BD TDS CE-MS-3500-28062-18	Certificate of Compliance Material Receiving Report	V	W/R	V	V	
		Scratch Coat/Filler - Repair Putty	Material Type & Properties	FRP Repair Putty Shipping Label & Receipt. Validate Expiration Date	Advanced FRP CF 500-BD TDS CE-MS-3500-28062-18	Certificate of Compliance Material Receiving Report	V	W/R	V	V	
		Composite Saturating Resin	Material Type & Properties	FRP Saturant 210 HT Shipping Label & Receipt	Advanced FRP CF 500-BD TDS CE-MS-3500-28062-18	Certificate of Compliance Material Receiving Report	V	W/R	V	V	
		High Performance Top Coat Epoxy	Material Type & Properties	FRP HP-300 Shipping Label & Receipt	Advanced FRP CF 500-BD TDS CE-MS-3500-28062-18	Certificate of Compliance Material Receiving Report	V	W/R	V	V	
	Material Storage	FRP CF 500-BD	Properly Stored	Store between 0 - 145 °F, out of sunlight, validate expiration date	Advanced FRP CF 500-BD TDS CE-MS-3500-28062-18	Inspection Report	M/V	P	M/V	M	
		FRP Tack Coat 110 HT	Properly Stored	Store between 0 - 145 °F, out of sunlight, validate expiration date	Advanced FRP CF 500-BD TDS CE-MS-3500-28062-18	Inspection Report	M/V	P	M/V	M	
		FRP 120 HT	Properly Stored	Store between 0 - 145 °F, out of sunlight, validate expiration date	Advanced FRP CF 500-BD TDS CE-MS-3500-28062-18	Inspection Report	M/V	P	M/V	M	
		FRP GF 300-BD	Properly Stored	Store between 0 - 145 °F, out of sunlight, validate expiration date	Advanced FRP CF 500-BD TDS CE-MS-3500-28062-18	Inspection Report	M/V	P	M/V	M	
		FRP Repair Putty	Properly Stored	Store between 0 - 145 °F, out of sunlight, validate expiration date	Advanced FRP CF 500-BD TDS CE-MS-3500-28062-18	Inspection Report	M/V	P	M/V	M	
		FRP Saturant 210 HT	Properly Stored	Store between 0 - 145 °F, out of sunlight, validate expiration date	Advanced FRP CF 500-BD TDS CE-MS-3500-28062-18	Inspection Report	M/V	P	M/V	M	
		FRP HP-300	Properly Stored	Store between 0 - 145 °F, out of sunlight, validate expiration date	Advanced FRP CF 500-BD TDS CE-MS-3500-28062-18	Inspection Report	M/V	P	M/V	M	
Adhesion Zone Abatement	Abate 5 FT Section of Pipe	Verify 100% of the coating is removed to exposed metal surface		Verify 5 FT section of pipe is abated to steel	CE-MS-3500-28062-18	Inspection Report	V	P	W/R	W/R	
Adhesion Zone - Grit Blasting	Visual inspection for pits.	Measure depth of pits.		Pit depth shall not be less than 50% of wall, prior to blasting.	CE-MS-3500-28062-18	Inspection Report	A	P	V/R	W/R	V
	Ultrasonic Testing selected spots	UT area @ 3, 6, 9 & 12 o'clock position in three equal location within the adhesion zone.		Minimum Pipe Wall Thickness is 50%	CE-MS-3500-28062-18 Carbon Fiber QA/QC Manual and Forms	Inspection Report	V	P	W/R	W/R	V
	Build Enclosure around Grit Blast Area	Ensure Enclosure is sufficient to prevent dust and debris from escaping into the air		No dust or debris discharging to atmosphere	CE-MS-3500-28062-18 Carbon Fiber QA/QC Manual and Forms	Inspection Report	V	P	W/R	W	
	Grit Blast to SSPC-SP-10 "Near White Metal Blast Finish" with 3 mil minimum angular profile	Verify by Testex Replica Tape at the 12 & 6 O'clock position		Minimum 3 mil angular profile	CE-MS-3500-28062-18 Carbon Fiber QA/QC Manual and Forms	Inspection Report	V	W/R	P/R	A	
	Vacuum and clean grit blast area with SSPC SP-1 Solvent Wash	Visual inspection for deposits of oil, grease, or other contaminants		Clean surface free of deposits	CE-MS-3500-28062-18 Carbon Fiber QA/QC Manual and Forms	Inspection Report	V	P	W/R	A	
Coating Removal	Cut flush to the surface any loose, delaminating coating. Fill void flush with the surface.	Visual inspection of the existing coating for raised or loose coating from the pipe surface by more than ½ inch or delaminating must be removed prior to composite wrapping.		No dielectric fluid leaks or loose and delaminating coating coating from the pipe surface.	CE-MS-3500-28062-18 Carbon Fiber QA/QC Manual and Forms	Inspection Report	V	P	W	V	
	Smooth out any sharp edges from clamps, barrel repairs, weld seems or removed coating with Scratch Coat/Filler	Visual inspection of the pipe surface for sharp edges		All sharp edges are coated with repair putty to create a transition zone	CE-MS-3500-28062-18 Carbon Fiber QA/QC Manual and Forms	Inspection Report	M	P	W	V	
	Verify composite material is not expired	Verify expiration date		Validate expiration date	CE-MS-3500-28062-18 Carbon Fiber QA/QC Manual and Forms	Inspection Report	M	P	R	V	
	Mixing of two part epoxy products	Verify product is mixed with low speed power agitator and that Part A is poured into Part B Bucket		Product should be a uniform color with minimal entrapped air	CE-MS-3500-28062-18 Carbon Fiber QA/QC Manual and Forms	Inspection Report	M	P	R	V	
	Apply 5 - 10 mils high strength adhesive FRP 120-HT to pipe surface.	Verify Wet Film Thickness > 5 mils		Dry Film Gauge must be above 5 mils DFT.	CE-MS-3500-28062-18 Carbon Fiber QA/QC Manual and Forms	Inspection Report	V	W/R	P/R	W	
	Cutting of Fiberglass	Ensure fiberglass is cut to a length of two times the circumference of the pipe plus six (6) inches		Circumferential overlaps on each band should be a minimum of 2"	CE-MS-3500-28062-18 Carbon Fiber QA/QC Manual and Forms	Inspection Report	M	P	V/R	V	

CONSOLIDATED EDISON COMPANY OF NEW YORK
INSPECTION TEST PLAN
COMPOSITE CARBON FIBER FOR ENCAPSULATION

Process	Activity	Inspection	Acceptance Criteria	Governing Standard	Documentation	Responsibility				
						CE Constr	Applicator	QC Inspector	NACE Inspector	CE Eng
Carbon Fiber Application	Saturate Fiberglass	Ensure both sides of the fiberglass are fully saturated but not oversaturated	No dry spots or pooling of saturant are visible	CE-MS-3500-28062-18 Carbon Fiber QA/QC Manual and Forms	Inspection Report	M	P	V/R	V	
	Apply Fiberglass to the adhesion zones	Saturated Fiberglass must be installed directly to the steel surface prior to any carbon fiber.	No visual defects shall be present once the Fiberglass is installed.	CE-MS-3500-28062-18 Carbon Fiber QA/QC Manual and Forms	Inspection Report	M	P	V/R	V	
	Cutting of Carbon Fiber	Ensure carbon fiber is cut to a length of two times the circumference of the pipe plus six (6) inches	Circumferential overlaps on each band should be a minimum of 6"	CE-MS-3500-28062-18 Carbon Fiber QA/QC Manual and Forms	Inspection Report	M	P	V/R	V	
	Saturate Carbon Fiber	Ensure both sides of the fiberglass are fully saturated but not oversaturated	No dry spots or pooling of saturant are visible	CE-MS-3500-28062-18 Carbon Fiber QA/QC Manual and Forms	Inspection Report	M	P	V/R	V	
	Apply 6 to 8 ayers of carbon fiber fabric	Document Batch number of the saturant	Document batch number of saturant used on carbon fiber fabric.	CE-MS-3500-28062-18 Carbon Fiber QA/QC Manual and Forms	Inspection Report	M	M	V/R	V	
		Environmental Conditions Monitoring	Document temperature and humidity of area where sample was prepared.	CE-MS-3500-28062-18 Carbon Fiber QA/QC Manual and Forms	Inspection Report	M	M	V/R	V	
		Carbon Fiber OEM and Batch #	Document Carbon Fiber OEM and Batch #	CE-MS-3500-28062-18 Carbon Fiber QA/QC Manual and Forms	Inspection Report	M	M	V/R	V	
		Date of Application	List date on report	CE-MS-3500-28062-18 Carbon Fiber QA/QC Manual and Forms	Inspection Report	M	M	V/R	V	
		Location of Piping system where the balance of carbon fiber fabric was applied.	Mark section of pipe where the balance of carbon fiber was applied from the batch.	CE-MS-3500-28062-18 Carbon Fiber QA/QC Manual and Forms	Inspection Report	M	M	V/R	V	
		List of applicators team members who mix and saturated the carbon fiber, and who install the saturated carbon fiber.	Document all personnel who participated in the preparation of the test sample.	CE-MS-3500-28062-18 Carbon Fiber QA/QC Manual and Forms	Inspection Report	M	M	V/R	V	
		Verify that each wrap is applied in the same direction, i.e. clockwise or counterclockwise	No visible wrinkles or bulges on the wrap surface	CE-MS-3500-28062-18 Carbon Fiber QA/QC Manual and Forms	Inspection Report	M	P	V	M	
		Offset Seams by 4" minimum	Seams offset a minimum of 4"	CE-MS-3500-28062-18 Carbon Fiber QA/QC Manual and Forms	Inspection Report	M	P	V/R	V	
		Verify fabric are pull tight to prevent air entrapment	No visible bulges on wrap surface	CE-MS-3500-28062-18 Carbon Fiber QA/QC Manual and Forms	Inspection Report	M	P	V/R	V	
		Ensure that the circumferential seams are offset between double layers of Carbon Fiber	Visibly inspect that seams are offset by a minimum of 6" between successive layers of Carbon Fiber	CE-MS-3500-28062-18 Carbon Fiber QA/QC Manual and Forms	Inspection Report	M	P	V/R	V	
	Tensile Strength Test Sample (12" x 12" two (2) Layer Sample of Carbon Fiber saturated fabric).	Verify the fabric samples are taken during the normal work routine, and set aside to cure in application environment.	12" x 12" samples are taken during routine work, and cured in application environment.	CE-MS-3500-28062-18 Carbon Fiber QA/QC Manual and Forms	Inspection Report	V	P	W/R	V	
		Document Batch number of the saturant	Document batch number of saturant used on carbon fiber fabric.	CE-MS-3500-28062-18 Carbon Fiber QA/QC Manual and Forms	Inspection Report	M	M	V/R	V	
		Environmental Conditions Monitoring	Document temperature and humidity of area where sample was prepared.	CE-MS-3500-28062-18 Carbon Fiber QA/QC Manual and Forms	Inspection Report	M	M	V/R	V	
		Carbon Fiber OEM and Batch #	Document Carbon Fiber OEM and Batch #	CE-MS-3500-28062-18 Carbon Fiber QA/QC Manual and Forms	Inspection Report	M	M	V/R	V	
		Date of Application	List date on report	CE-MS-3500-28062-18 Carbon Fiber QA/QC Manual and Forms	Inspection Report	M	M	V/R	V	
		Location of Piping system where the balance of carbon fiber fabric was applied.	Mark section of pipe where the balance of carbon fiber was applied from the batch.	CE-MS-3500-28062-18 Carbon Fiber QA/QC Manual and Forms	Inspection Report	M	M	V/R	V	
		List of applicators team members who mix and saturated the carbon fiber, and who install the saturated carbon fiber.	Document all personnel who participated in the preparation of the test sample.	CE-MS-3500-28062-18 Carbon Fiber QA/QC Manual and Forms	Inspection Report	M	M	V/R	V	
		Submit 12" x 12" Sample to Test Lab - Results in 48 hours	Minimum acceptable value 85,600 psi - PASS	ASTM D3039 CE-MS-3500-28062-18 Carbon Fiber QA/QC Manual and Forms	Inspection Report	P	M	V/R	V	
		Review Lab Results for 12" x 12" Sample	Minimum acceptable value 85,600 psi - PASS Values between 53,500 to 85,600 - FAIL - Add 3 additional CF layers Values less than 53,000 - FAIL - add 6 additional CF layers	CE-MS-3500-28062-18 Carbon Fiber QA/QC Manual and Forms	Inspection Report	V	M	V/R	V	A
	Adhesion Test Sample (12" x 12" grit blasted plate with one (1) layer of saturated 12" x 12" fiberglass on the entire plate.	Grit Blast 12" x 12" 1/4" Steel Plate to SSPC-SP-10 "Near White Metal Blast Finish" with 3 mil minimum angular profile	Verify surface finish by Testex Replica Tape is a minimum of 3 mils.	CE-MS-3500-28062-18 Carbon Fiber QA/QC Manual and Forms	Inspection Report	M	W/R	W/R	A	
		Verify the fabric samples are taken during the normal work routine, and set aside to cure in application environment.	12" x 12" samples are taken the same day an adhesion zone is prepared, blasted, and wrapped.	CE-MS-3500-28062-18 Carbon Fiber QA/QC Manual and Forms	Inspection Report	M	P	W/R	V	
		Document Batch number of the saturant	Document batch number of saturant used on carbon fiber fabric.	CE-MS-3500-28062-18 Carbon Fiber QA/QC Manual and Forms	Inspection Report	M	M	R	V	
		Temperature of Environment	Document temperature of area where sample was prepared.	CE-MS-3500-28062-18 Carbon Fiber QA/QC Manual and Forms	Inspection Report	M	M	R	V	
		Humidity of Environment	Document humidity of area where sample was prepared.	CE-MS-3500-28062-18 Carbon Fiber QA/QC Manual and Forms	Inspection Report	M	M	R	V	
		Carbon Fiber OEM and Batch #	Document Carbon Fiber OEM and Batch #	CE-MS-3500-28062-18 Carbon Fiber QA/QC Manual and Forms	Inspection Report	M	M	R	V	

CONSOLIDATED EDISON COMPANY OF NEW YORK
INSPECTION TEST PLAN
COMPOSITE CARBON FIBER FOR ENCAPSULATION

Process	Activity	Inspection	Acceptance Criteria	Governing Standard	Documentation	Responsibility				
						CE Constr	Applicator	QC Inspector	NACE Inspector	CE Eng
	(1) layer of saturated 12" x 12" carbon fiber on top of the fiberglass, and (1) layer of saturated 6" x 12" carbon fiber on half of the plate)	Date of Application	Document when the adhesion zone was prepared.	CE-MS-3500-28062-18 Carbon Fiber QA/QC Manual and Forms	Inspection Report	M	M	R	V	
		Location of Piping system where the balance of carbon fiber fabric was applied.	Mark section of pipe where the balance of carbon fiber was applied from the batch.	CE-MS-3500-28062-18 Carbon Fiber QA/QC Manual and Forms	Inspection Report	M	V	R	W	
		List of applicators team members who mix and saturated the carbon fiber, and who install the saturated carbon fiber.	Document all personnel who participated in the preparation of the test sample.	CE-MS-3500-28062-18 Carbon Fiber QA/QC Manual and Forms	Inspection Report	M	V	R	V	
		Onsite adhesion test of 12" x 12" sample	Minimum adhesion strength of 2,000 psi	ASTM D4541 & CE-MS-3500-28062-18 Carbon Fiber QA/QC Manual and Forms	Inspection Report	A	V	P/R	W	
		Barcol Hardness Test, to verify cure status.	Test sample after 48 hours (Minimum acceptable value 41).	ASTM D2583 CE-MS-3500-28062-18 Carbon Fiber QA/QC Manual and Forms	Inspection Report	A	W/R	W/R	V	
	Apply 2 additional layers of Carbon Fiber over adhesion zone and coated area	Verify fabric extend a minimum of 1 FT onto the coated area, from adhesion zone.	A combined span of 5 FT between the adhesion zone and coated area.	CE-MS-3500-28062-18 Carbon Fiber QA/QC Manual and Forms	Inspection Report	V	P	V	M	
Final Exterior Coat of Epoxy	Allow carbon fiber to dry for couple of hours prior to applying top coat.	Verify carbon fiber is dry to the touch	Surface of carbon fiber it tacky to the touch	CE-MS-3500-28062-18 Carbon Fiber QA/QC Manual and Forms	Inspection Report	M	P	V	V	
	Apply one coat of 15 - 25 mils FRP HP-300 to pipe surface.	Visually observe coated surface for excessive runs and drips. Verify Wet Film Thickness 15 - 25 mils	No runs or drips of top coat is visible. Wet Film Gauge results are between 15 - 25 mils.	CE-MS-3500-28062-18 Carbon Fiber QA/QC Manual and Forms	Inspection Report	M	P	V	V	
	Apply two coats of red top coating to adhesion zone	Verify adhesion zones are color coded red.	Three (3) FT stripe on opposite sides, with adhesion zone label.	CE-MS-3500-28062-18 Carbon Fiber QA/QC Manual and Forms	Inspection Report	V	P	V	A	
	Final coated surface shall be free of any sharp or protruding edges, pits, or ripples.	Verify surface is smooth and does not pose an issue for NDE.	No runs or drips of top coat is visible. Wet Film Gauge results are between 15 - 20 mils.	CE-MS-3500-28062-18 Carbon Fiber QA/QC Manual and Forms	Inspection Report	V	P	W/R	W	
Dynamic Response Spectroscopy Scanning - NDE	Inspect surface finish	Verify carbon fiber surface is free of sharp and protruding edges, ripples, and pits.	Visual inspection of pipe surface is uniformly smooth	CE-MS-3500-28062-18 Carbon Fiber QA/QC Manual and Forms	Inspection Report	V	P	V	V	
	DRS Scanning of Adhesion Zones	Scan 100% of each adhesion zones.	No disbondment of the carbon fiber, and no interacting flaws with 25 mm of each other.	CE-MS-3500-28062-18 Carbon Fiber QA/QC Manual and Forms	Inspection Report	V	P	W/R	M	A
Barcol Hardness Test	Hardness test carbon fiber wrap every 50 FT @ 3, 6, 9 & 12 o'clock position	Barcol Hardness Test, to verify cure status.	Test sample after 48 hours. (Min. 41)	CE-MS-3500-28062-18 Carbon Fiber QA/QC Manual and Forms	Inspection Report	A	W/R	W/R	V	M
Project Report	Comprehensive report of all inspections, testing, changes, and results	All reports are complete and and submitted.	Installation work is completed, and no testing scheduled.	CE-MS-3500-28062-18 Carbon Fiber QA/QC Manual and Forms	Inspection Report	M	P	V/R	M	A

LEGEND:

P	Perform
M	Monitor
V	Verify
R	Record
A	Approve
W	Witness

Addendum	Addendum Question No.	Bidder's Question	Response
11	1	Please refer to Contract Drawing JB-68 it is unclear where the proposed new 8" STL Gas Main transitions to 3" STL please clarify.	All locations of fittings are approximate and indicated on the Gas Cost Sharing plans and Gas Capital Plan Non-Gas Cost Sharing plans in the JB-Pages.
11	2	Reference: Delancey Street Bridge Removable Bollards. Three (removable) bollards are shown at start of West Ramp on drawings BD104, Sheet 231, and BD114, Sheet 241. However, on drawing BD182, Sheet 309 are shown two (removable) bollards. Please clarify.	Drawing BD182 has been revised to show three bollards. Refer to Addendum 9, Article 4.
11	3	Pay items for construction report/Monitoring & post construction report for reach D, E, F, G, H, & I are missing. These were included in the specs vol 3 page 823 Spec 76.11.5. Please provide these pay items.	Item Numbers for 76.11 and 76.21 series have been updated in the bid schedule with an ESCR prefix. Pay items for Reaches D-I have been added. Refer to Addendum 10, Article 1 for the current bid schedule.
11	4	Please provide the "Pier 42 Contract" contract drawing as one of the reference documents since the project will fall in close proximity to the SANDRESM1 work area.	The Contractor must obtain Pier 42 documents from the NYC EDC.
11	5	Please provide the locations for the following Pay items which we have not been able to find on the plans: 50.21C5E048D - 48" R.C.P. Class V Combined Sewer, Encased In Concrete, 50.31CC15 - 15" E.S.V.P. Combined Sewer, On Concrete Cradle, 51.22RM.A05, 51.22RM.A06, 51.22RM.A07, 51.22RM.A08, 51.22RM.A10, 51.22RM.A11, 51.22RM.A12, - 51.22RM.A13, 51.22RM.A14, 51.22RM.A15, 51.22RM.A16, 51.22RM.A17, 51.22RM.A18, 51.22RM.B01, - 51.22RM.B03, 51.22RM.B05, 51.22RM.B08, 51.22RM.B10, 51.22RM.B11, 51.22RM.C05, 51.22RM.C06, - 51.22RM.C07, 51.22RM.K13 - Reconstruction Of Existing Manhole On Existing Sewer(s), 51.71C00M22 - Modification Of Existing Chamber M-22, 51.71C00M23 - Modification Of Existing Chamber M-23	All items have been removed. Refer to Addendum 10, Article 1.
11	6	On sheet 1186 the proposed New Manhole MH-B14 is shown to be paid under Pay item 51.21S0A1000C.B14 which is not currently part of the Bid Schedule; Please revise this note or provide the Pay item.	Item 51.21S0A1000C.B14 has been deleted and replaced by item 51.11P004.B14. Refer to Addendum 10, Article 1.
11	7	Item 6.36 DR, 'Con Edison Electrical Manhole…', as noted on sheets 553, 554 does not appear in the Bid Schedule. Please clarify.	Item 6.36 DR is in the bid schedule with a generic title for adjusting utility structures.
11	8	In regards to JB item 123(CE) "INSTALLATION OF A COMPOSITE CARBON FIBER SYSTEM ENCAPSULATION OF UNDERGROUND TRANSMISSION FEEDERS AND RETURN LINES" Who will be responsible for 3rd party testing.	Please refer to PBQ response #173 in Addendum 9. The Contractor is responsible for third party testing.
11	9	Regarding Pay Item 583.03, REMOVAL OF STRUCTURAL CONCRETE-REPLACEMENT WITH SHOTCRETE, WITH REINFORCEMENT BAR ENCASEMENT. Locations and details for this item can not be located on the plans. Please provide details for this work.	Item 583.03 has been deleted. Refer to Addendum 10, Article 1.
11	10	Sheet 278 of 2791 drawing CW600 portrays a cross-sectional view of the electrical feeders and the return piping. Please provide pipe outside diameters for the 138KV,345KV and 69KV feeders. The drawing shows a scale of 1"=30' please confirm the scale is accurate.	The scale has been revised on drawing CW600. Refer to Addendum 9, Article 4. The diameters provided from Con Ed shows both 128kV and the 345kV to be approximately 10". The diameter of the 69kV is approximately 8".

Addendum	Addendum Question No.	Bidder's Question	Response
11	11	Reference: Precast Seawall Connection Detail; Addendum No. 3 01 - 2013 As Built Record Drawings, Drawing S-47A, Sheet No. 50 of 117. Please confirm that ½" plate shown on Drawing S-47A, Elevation of Precast Seawall and Section 2-2, illustrate connection detail between the existing Precast Seawall and existing concrete cap beam?	This detail comes from the existing esplanade "As-Built" drawing which were developed by others, and the Contractor must interpret it accordingly. We interpret this detail as likely showing the connection between the existing seawall and the existing pile caps through built-in angles as shown on SC-12D.AB
11	12	Referencing Sheet 2215 of M&O Area 1 there is a note to see Elec Drwg E-401 for info on the EV Charging Station. The only E-401 drawing we see is with M&O Area 3 and it is labeled Building Electrical Power Plan. Please clarify.	Correct. Electrical sheet is PUE410. Drawing A-100 will be revised with a correct note.
11	13	Marine Coverage's - A large component of this project is the raising of the shoreline several feet by placing approximately 800,000 plus cubic yards of fill material. There is limited vehicle access into the park areas, so it is anticipated that the fill materials and some equipment will be brought to the site via barges and maritime transportation. The wet work is likely to require; spud barges, jack-up barges, construction trestles, temporary piers, temporary wharves, gangways, moorings, floating moorings, fendering, and vessels that will be used at the Project Site. Can you please consider to include the coverage in Schedule A for this?	Refer to revised Schedule A in Addendum 10, Article 2.
11	14	Items ESCR-4.25 RW and WESCR-4.25 PFT are for a base price of wells installed to 35 feet below grade and for additional/reduced well foot (beyond/less than the base 35 foot) respectively. However Specifications pages HAZ-9 and HAZ-10 states that the prices are for wells installed to 60 feet below grade and for additional/reduced well foot (beyond/less than base 60 foot) respectively. Please clarify this apparent discrepancy.	Refer to Addendum 10, Article 2 for revised specifications.
11	15	Following bid items are present in Bid Schedule but we are unable to locate scope of work on contract drawings. Please clarify exact locations and provide necessary drawings so we could quantify. 1. 564.0503 – Structural Steel Type 3 – 24000 LB 2. 565.1420008 – Non-Guided PTFE Sliding Bearings – 1209 Each 3. 567.50 – Armored Joint System with Preformed Elastic Strip Seal – 60 LF 4. 585.01 – Structural Lifting Operations Type A – 400 Each	1. Item 564.0503 has been deleted. 2. For locations and details of item 565.1420008, refer to drawing WS761. 3. Item 567.50 has been deleted and replaced by Item 567.60 as shown on drawing BC140. Refer to Addendum 10, Article 1. 4. Item 585.01 has been deleted. Refer to PBQ response #7 in Addendum 10.
11	16	Bid Item 595.50000018 "SHEET-APPLIED WATERPROOFING MEMBRANE" was added in Addendum 5, but couldn't find any detail on the drawings that show this Item. Can you provide details or location where this Item should be applied?	Refer to drawing WS691B for waterproofing membrane details. Drawings WS600 to WS629 also show the extent of the waterproofing membrane on the esplanade deck.

Addendum	Addendum Question No.	Bidder's Question	Response
11	17	There is a conflict between the cut-off wall profile and the deadman profile matchline station denoted on Contract Drawing WS412. Please clarify which station is correct.	Drawing WS412 has been revised with a corrected matchline station. Refer to Addendum 9, Article 4.
11	18	Sheet No. 2521 and Sheet No. 2522 indicate that there is a transition from 8" CMU block into 12" CM U block on the east side of the tennis building. However, no cross sections are shown. Please provide.	See architectural drawing A-654, details 3 and 4.
11	19	Bid items 4.01RAE, 4.02AB-R, 4.02CB, 4.04H, 4.05A, 6.03DD, 6.05DP, and 6.75 do not appear on any of the drawings. Please indicate where these items are used.	Items 4.01RAE, 4.05A, 6.03DD, and 6.05DP have been deleted from the contract. For item 4.02AB-R, refer to drawing FG245. Item 4.02CB is used for temporary trench restoration. Item 4.04HC, 8" base, is used at Delancey and E. 10th Streets. Item 4.04HD, 9" base, is used at Montgomery, 13th and 14th Streets, FDR north entrance ramp, floodwall pavement restoration, sign structure pavement restoration. Refer to revised drawings F110, F122, F123, and FG245, along with Delancey and E. 10th Street drawings for item 6.75. Refer to Addendum 9, Article 4 and Addendum 10, Article 1 for the current bid schedule.
11	20	Reference: Pier 166(N) pedestal height. Per S-1, Pier Pedestal Reinforcement on Drawing WS513 and Drawing WS667 Typical Section for Pier Type N, Pier 166(N) pedestal height is 5'-0 3/8". However, per Drawing WS629, Pier 166 (N) pedestal is 4'-0" … Top of Pile Cap Elevation +3.36, Top of Precast Conc. Solid Slab Elevation +9.36, and precast slab is 24" thick. Please clarify what is correct.	The 5'-0 3/8" pedestal height dimension shown on WS513 and WS667 is correct. See the latest version of WS629 which shows a revised Top of Precast Conc. Solid Slab Elevation of +10.48. The 4' dimension on WS629 is the height of the existing pile cap to remain. The 5'-0 3/8" tall pedestal mentioned in this comment actually sits on top of this 4'-0" tall existing pile cap (Although the 5'-0 3/8" dimension is not explicitly dimensioned on WS629). 5'-0 3/8" =10.48' top of slab-2' slab-1.25/12' bearing-3.36' top of pile cap+1/8/12' slope correction = 5'-0 3/8". Note that Note 2 on the latest version of WS513 is applicable to this pedestal height as well. Refer to Addendum 9, Article 4.
11	21	Pay item ESCR.24.05 RS: Is this pay item for 24" rock sockets at the 30" x 1" piles at the L-Wall?	No, the pay item for the 24" rock sockets at the L-wall is ESCR-551.30.01 RS. Drawing WS880 will be revised. Item ESCR-551.24.05 RS has been removed from the cost estimate. Refer to Addendum 10, Article 1.
11	22	Contract Drawing WS368 depicts two L-Walls with pipe piles (vertical and battered) providing additional support for the proposed sewer outfall penetration in the Combi-Wall between stations 65+32.46 and 65+92.92. The corresponding profile for the combi-wall is depicted on drawing WS438 with a tip elevation for the combi-wall of -61. Additionally, a tip elevation of -85 is depicted on drawing WS880 for the same exact location which produces a conflict. Clarify which tip elevation is correct for all elements (combi-wall king pile, combi-wall sheet pile, L-Wall vertical pipe piles and L-Wall battered pipe piles and rock socket.	Drawing WS438 has been revised as part of Addendum 9, Article 4, to show the correct tip elevation of -85' for the vertical pipe piles as part of the combi-wall. The intermediate sheet pile requires a tip elevation of -50' as shown on drawings WS438 and WS880. The battered pipe piles shall be rock socketed and details can be found on drawing WS880.

Addendum	Addendum Question No.	Bidder's Question	Response
11	23	On Plan Sheets 135 (BID ITEM# 565.1523 & 565.1723), 279 & 391 (BID ITEMS# 565.1522 & 565.1722) of 2791: Are the loads labeled as VERTICAL DESIGN LOADS located in the tables Service Loads or Strength Loads?	Loads are results of multiple load cases/combinations per AASHTO load combinations.
11	24	"On Plan Sheet 135 (BID ITEM# 565.1523 & 565.1723) of 2791: The Lateral Loads for the Fixed Bearings are substantially high compared to the Vertical Loads. According to AASHTO LRFD : Section C 14.6.1, Bearings are not recommended for Horizontal to Vertical Load Ratios over 40% unless intended to act as fuses or irreparable damage is permitted. Based on this statement, how should the high Lateral Loads be handled by the Pot or Disc Bearings?"	Please see the following revised bearing loads: For the west and east abutments the Vertical Loads are DC - 255 KIPS, DW - 20 KIPS, LL - 95 KIPS For west abutment Design Loads; Vertical 509 KIPS, Longitudinal 159 KIPS, Transverse 219 KIPS For east abutment Design Loads; Vertical 509 Kips, Longitudinal 0 KIPS, Transverse 206 KIPS Note that the transverse loads on bearings is mainly from temperature. By providing a gap of 1/8" between the guide and bearing, the transverse force due to temperature can be eliminated.
11	25	Bid items 203.02, 304.11, 6.60B, 6.67, PK-197, and PK-ESCR824A do not appear in any of the drawings. Please indicate where these items are.	Items 203.02 and 6.60B have been deleted, and item PK-197 only exists in the Con Edison joint bid scope. Refer to Addendum 10, Article 1 for the current bid schedule. Item PK-ESCR 824 A can be found on revised drawing LD810 (details 1-4). Refer to Addendum 9, Article 4. Item 304.11 is used under the approach slab, see drawing BC149.
11	26	Please clarify the foundations at the M+O prefabricated buildings, tennis house, track and field building, and comfort station. 1) Architectural drawings seem to imply vapor barrier extends to the vertical faces of the footings, but is not shown on the structural drawings. Please clarify if vapor barrier and insulation are to wrap around all footings.2) Detail on structural drawings show vapor barrier, insulation, 4in or 6in crushed stone and 3ft minimum structural fill below the slab on grade. Please confirm it is 3ft minimum of structural fill as the detail and section drawings are scaled to imply 3in, and that the detail applies to below footings.	1. M&O pre-fab structures shall have a vapor barrier at the underside of the slab and foundation and at all vertical surfaces below grade; Tennis/track and Comfort Station to have WPS-01 and WPS-02. 2. Structural Fill is 3' Minimum.
11	27	SB drawings reference item ESCR-61CW as pay item for concrete security wall, but this item is not a bid item. Please clarify.	Item ESCR-61CW has been added. Refer to Addendum 10, Article 1 for the current bid schedule.

Addendum	Addendum Question No.	Bidder's Question	Response
11	28	Reference: Existing Deadman cut elevations; Drawing WS140, Sheet 708 Waterfront Demolition Section, Sheet 1 of 10, Flood Wall; Drawing WS 100 Waterfront Demolition Plan, Sheet 670; Drawing WS 101 Waterfront Demolition Plan, Sheet 671; Note No. 3 on Drawing WS140 reads: "The top of the existing deadman should be cut down to El. +3.41' NAVD88 in specific locations. Refer to Drawings WS100 and WS101 for exact locations." However, per Drawing WS 100, between bents 1 and 4 existing sheet pile deadman will be partially demolished to El. +3.0' and between bents 4 and 5 sheet pile deadman will be partially demolished to El. -5.0' and per Drawing WS 101 between bents 35 and 38 existing sheet pile deadman will be partially demolished to El. +3.0' and between bents 38 and 39 sheet pile deadman will be partially demolished to El. -6.0'. Please clarify location where the existing deadman will be cut down to El. +3.41? 1. Reference: Precast Seawall Connection Detail; Addendum No. 3 01 - 2013 As Built Record Drawings, Drawing S-47A, Sheet No. 50 of 117.	Drawing WS140, Note 3, has been revised to refer to WS100 & WS101 for deadman removal extents. The callouts on WS100 & WS101 are correct and should be used for deadman removal elevations. Refer to Addendum 9, Article 4.
11	29	Please confirm that ½" plate shown on Drawing S-47A, Elevation of Precast Seawall and Section 2-2, illustrate connection detail between the existing Precast Seawall and existing concrete cap beam? Reference: Corlears Hook Bridge Deck Sections, Drawing BC 140, Sheet 150. Note on Drawing BC 140 reads: "Refer to architectural drawings for handrail and guardrail section (Item No. NYC-607.064 AA)." This item is not part of the bid breakdown. Please clarify.	See revised drawing BC140. Refer to Addendum 9, Article 4.
11	30	Refer to Detail 1 on sheet 2238 and Section C on sheet 2272 of the Contract Drawings. The Detail and Section on these sheets call for the anchor bolts to be 1 ½" diameter. Note 1 on both of these sheets calls for the anchor bolts to be 2" diameter. What is the correct size of the anchor bolts?	Anchor Bolts are 2" DIA. Drawing will be updated accordingly.
11	31	Refer to sheets 2238 and 2272 of the Contract Drawings. What is the thickness of the embedded anchor bolt plate?	Thickness of Embedded Plate is 1". Drawing will be updated accordingly.
11	32	Please define locations of Steel H-Piles 18x181 locations	Item 551.018181 has been removed. Refer to Addendum 10, Article 1 for the current bid schedule.
11	33	Sheet 597 was re-issued in Addendum #05. Information on the drawing is invalid and not legible, please re-issue revised drawing.	Refer to Addendum 10, Article 3.
11	34	Sheet 1025I;Addendum #05; Please provide and identify pay item ESCR 551.42.06 D	Drawings with item ESCR-551.42.06 D include WS903I. The item has been added to the bid schedule. Refer to Addendum 10, Article 1. A note will be added to WS903I.
11	35	Sheet 811 and Sheet 686 state at bent 81 the Combo Wall system becomes a 42" Interlock Pipe system, not a typical PAZ42NZ19. Additionally Sheet 769 shows the typical PAZ42NZ19 combowall system. Please clarify.	Drawing WS347 is correct. Drawing WS417 has been revised. Refer to Addendum 9, Article 4. Drawing WS118 will be revised to match.
11	36	There are missing sections of the gate / micropiles from drawing FG110 at the Montgomery gate. Please provide the missing sections	Drawing FG110 has been revised. Refer to Addendum 9, Article 4.

Addendum	Addendum Question No.	Bidder's Question	Response
11	37	Section B4 of Drawing F601 indicates that the 24" steel pipe is coded to ESCR-551.24.05.C. Other cross sections and profiles, for example on drawing F401, indicate that the same 24" pile is coded to ESCR-552.24.05-CJG. Please verify which cost code is correct.	Drawing F601 has been revised. Refer to Addendum 9, Article 4.
11	38	WS160-WS161; Both items have respective removals paid under items ESCR 6.27 S and ESCR 6.27 TC. Does this pay item include predrilling into existing concrete and timber structures for floodwall installation.	Please refer to revised drawings WS160 and WS161 for correct item numbers. Refer to Addendum 7, Article 2 and Addendum 9, Article 4. Predrilling for floodwall installation through concrete bulkhead is paid for under item ESCR-552.11 20CB. For locations where timber cribbing is found, predrilling for floodwall installation is paid under item ESCR-552.11 20CT.
11	39	Addendum 6 removed pay item 6.03P. Waterfront Demolition Section drawings (WS140 series) still show pavers as removed under that item. Please clarify where the removal is to be paid under.	Please refer to revised drawing WS140 series in Addendum 9, Article 4 for updated item 6.02AAN locations.
11	40	Drawing F100 identifies clear and grub at Gouverneur Gardens as item 6.01 AC. Drawing PDS120 identifies the same area of as removal of lawn or planting under ESCR 6.01 AB. Please clarify which pay item is to be used.	F100 has been revised to refer to PDS120. Refer to Addendum 9, Article 4.
11	41	The contract has limited information on the existing sewers west of the FDR. This information is needed to determine how to maintain via bypass dry and wet weather flows during construction of new outfalls. Please provide DEP area sewer drawings.	Sewer maps will be provided to the Contractor after contract registration.
11	42	Please note that "Site grading" drawings show various mini-piles under utility structures. The bid item given to these is "70.13MN", for example on drawing PUD404. However, there is no such bid item. It is assumed these refer to "71.13MN". Please confirm.	The correct item number is 70.13 MN. Refer to Addendum 10, Article 1 for the current bid schedule.
11	43	In the "overhead sign structures" drawing OS159, the embedment for shafts 3N and 8N is shown as 30 feet. In OS166, the table indicates that the embed depth is 42 lf. Please verify which embedment is correct for these sign structure shafts.	Embedment for Shafts 3N and 8N is 42' as shown on the table on drawing OS166. Drawing OS159 will be revised to match the table.
11	44	Structural Steel Note 7 on WS001 states "all welding shall conform to AWS D1.1". But Welding Note 2 on same drawing states "structural welds shall be inspected using ultrasonic testing in accordance with ANSI/AWS D1.5". Furthermore, specification ESCR-551 paragraph 551.05(E) states "Perform welding in accordance with requirements for shielded metal arc welding of AWS D1.1 for buildings of other structures". But then it goes on to say "AWS provisions for bridge construction [i.e. D1.5] shall apply where applicable. Please clarify what requirements of D1.5 (if any) apply to the welding of steel pipe piles. It seems the intent is that this welding should be performed according to D1.1, but it is not clear based on passing references to D1.5.	AWS D1.1 is sufficient. Drawing WS001 will be revised to include only AWS D1.1. Specification Section 551.05 (E) has been revised accordingly. Refer to Addendum 10, Article 2.

Addendum	Addendum Question No.	Bidder's Question	Response
11	45	Drawing WS501A calls for 3 ea. 24" x .75" piles to undergo dynamic testing under item ESCR-551.24.75.DT. Drawing WS812 also calls for pile P4 to undergo dynamic testing under the same item (so 4 tests total). The quantity listed on bid sheet for ESCR-551.24.75.DT is 3 per test. Please confirm correct quantity for this item.	Two additional dynamic tests for the 24" inch piles have been added (item ESCR-551.24.75 DT quantity is now 5) to account for tests at proposed embayment platforms (P4 on drawing WS812 & P'3 on drawing WS816). Refer to Addendum 10, Article 1.
11	46	Pile Schedule on dwg. W885A calls for piles A-27, D-27, and D-28 to be 30" x 1". Section B on same drawing references bid item ESCR-551.24.05 which covers 24" x 0.5" pipe. Please confirm correct pipe size and bid item for the 3 referenced piles in this location. Furthermore, pile schedule gives tip elevation as -85 whereas Section B shows Tip -70. Please clarify.	Refer to revised drawing WS885A as part of Addendum 9, Article 4, for corrected item numbers and tip elevations. Piles A-27, D-27, & D-28 shall be 30" x 1". Tip elevation has been corrected to -70' in the pile schedule to match Section B.
11	47	NYCDOT Standard Specification Section 565-Bridge Bearings states that "Anchor dowel holes shall be core drilled." However, drilling/installing the anchor rods falls under Bid Item No. 586.0201-Drilling and Grouting Bolts or Reinforcement Bars NYCDOT Standard Specification Section 586-3.01 states that "All holes shall be drilled by means of a rotary impact drill." Please specify how the #8 and #10 bearing anchor rods are supposed to be installed (drawing WS708-713). Can they be either core drilled or drilled with a rotary impact drill?	For the bearings, the anchor rods shall be core drilled and filled with material specified in Note 1 on drawing WS660. Item 565.1821 includes drilling of the anchor rods for the bearings. Associated drawings WS708 to WS713 will be revised accordingly. The bid schedule has been updated to move quantity from item 586.0201 to item 565.1821. Refer to Addendum 10, Article 1.
11	48	Spec section 6.20.5.g states a tolerance of 0.7 feet +/- but drawing WS619 says +/- 6" (0.5 ft), which one governs?	Drawing WS619 governs - please use +/- 6" deviation tolerance. Specification section 6.20 has been revised to match. Refer to Addendum 10, Article 2.
11	49	Spec Section 6.20, with respect to survey frequency: (a) Subpart 3 says cross section are every 50 ft. (b) Subpart 5 says cross section every 25 ft. Which one governs?	The cross sections should be taken every 25 FT. Specification Section 6.20 has been revised accordingly. Refer to Addendum 10, Article 2.
11	50	Are the piles for the embayment platforms 24x0.500 or are they 24x0.750?	The north embayment platform piles should have a thickness of 0.75". See revised drawing WS617 for corrected item number. Refer to Addendum 9, Article 4.
11	51	Note that bid item 522 ESCR 60.29 – Cathodic Protection (anodes) shows a bid quantity of 1386, but the drawings state 1,771 are required	Drawing WS903 is correct. The bid schedule has been revised to reflect the updated quantity. Refer to Addendum 10, Article 1 for the current bid schedule.
11	52	Can you confirm that the minimum unit price of $24,000/lf is correct? Bid item JB 123 (CE): Installation of a Composite Carbon Fiber System Encapsulation of Underground Transmission Feeders and Return Lines.	Correct, but note that the unit of measurement is Linear Trench Foot.
11	53	Please provide a bid item for demolition shown on drawing WS146, Section G (item ESCR-6.27 G is referenced on this drawing but not on bid form).	Item ESCR-6.27 G has been added. Refer to Addendum 10, Article 1 for the current bid schedule.
11	54	Most recent bid form gives quantity of 153 LF for bid item 563.0101. By adding up the first nine girders on WS702 (230+ LF) it is already apparent this quantity is significantly off from drawings. Same goes for taking tabulated values for bid item 563.0105, 563.03, and ESCR-557.44. Please provide a reconciled bid form updated based on Addendum 7 quantities.	The quantities for items 563.0101, 563.0105, 563.03, and ESCR-557.44 have been updated. Refer to Addendum 10, Article 1.

Addendum	Addendum Question No.	Bidder's Question	Response
11	55	Specification ESCR-3.05 calls for a maximum slump of 4 inches for esplanade structures. Please note marine concrete with 4" slump will not be able to be pumped or finished reliably due to accelerating nature of corrosion inhibitor regardless of amount of retarder added. Please confirm a slump of 8" is acceptable for cast-in-place esplanade structures.	Specification ESCR-3.05 has been revised. Refer to Addendum 10, Article 1.
11	56	[Item ESCR-551.24.75C] The quantity derived from the Drawings is considerably less that the bid quantity. Please clarify this apparent discrepancy	The quantity for item ESCR-551.24.75.C has been revised to 5,472 LF to match quantities shown on the pile schedule found on drawing WS501. Refer to Addendum 10, Article 1.
11	57	[Item 565.1821] The quantity derived from the Drawings is considerably less that the bid quantity. Please clarify this apparent discrepancy	The quantity of item 565.1821 has been revised to 761 bearings to match quantities shown on the drawings WS450 to WS461. Refer to Addendum 10, Article 1.
11	58	[Item 586.0201] The quantity derived from the Drawings is more than double the Bid Quantity. Please clarify this apparent discrepancy.	The quantity of item 586.0201 has been revised to 3,025 anchors to match quantities shown on drawings WS708 to WS712 and F880 drawing series. Refer to Addendum 10, Article 1.
11	59	Please reference Drawings WS330 (sheet 752), WS400 (sheet 794) and WS600 (sheet 873). The cross section on WS600 shows Items ESCR-552.11 4219C and ESCR-552.11 4219CD in the same location (i.e. overlapping). The profile shown on WS400 does not clarify which pay item number is applicable. This ambiguity repeats on every cross section and profile. Items ESCR-552.11 4219C, ESCR-552.11 4219CD and ESCR-552.11 4219CI all have a Unit of Measure of square feet. Drawing WS400 depicts the tip elevation of combi-pile at -55, while the intermediate sheet pile tip is at -32. Regarding the pay square footage: 1. Please define the upper and lower pay limits for items ESCR-552.11 4219C, ESCR-552.11 4219CD and ESCR-552.11 4219CI as the specification does not address these differing elevations.	Refer to the Cutoff Wall Schedule found on WS441A for stationing extents and breakdown of each pay item. For the predrilling assumed percentage for bidding purposes, if the table lists multiple item numbers, apply the predrilling percentage to capture quantity for the predrilling pay item. Square footage quantities to be calculated as described in PBQ response #60, below.

Addendum	Addendum Question No.	Bidder's Question	Response
11	60	Please reference Drawings WS330 (sheet 752), WS400 (sheet 794) and WS600 (sheet 873). The cross section on WS600 shows Items ESCR-552.11 4219C and ESCR-552.11 4219CD in the same location (i.e. overlapping). The profile shown on WS400 does not clarify which pay item number is applicable. This ambiguity repeats on every cross section and profile. Items ESCR-552.11 4219C, ESCR-552.11 4219CD and ESCR-552.11 4219CI all have a Unit of Measure of square feet. Drawing WS400 depicts the tip elevation of combi-pile at -55, while the intermediate sheet pile tip is at -32. Regarding the pay square footage: 2. Does the bottom pay limit for these items follow the tip elevations of BOTH the combi-pile pile and the sheet piles shown on WS400 (i.e. varying elevations), or is it one horizontal line along the tip elevation of the combi-pile pipe?	The total square footage is calculated assuming the specified tip elevations for the pipe pile and the intermediate sheet pile as shown on the contract drawings, i.e. varying elevations. Refer to Addendum 10, Article 2 for revised language in FW-Pages Section 552.06 on vertical measurement.
11	61	Please reference Drawings WS330 (sheet 752), WS400 (sheet 794) and WS600 (sheet 873). The cross section on WS600 shows Items ESCR-552.11 4219C and ESCR-552.11 4219CD in the same location (i.e. overlapping). The profile shown on WS400 does not clarify which pay item number is applicable. This ambiguity repeats on every cross section and profile. Items ESCR-552.11 4219C, ESCR-552.11 4219CD and ESCR-552.11 4219CI all have a Unit of Measure of square feet. Drawing WS400 depicts the tip elevation of combi-pile at -55, while the intermediate sheet pile tip is at -32. Regarding the pay square footage: 3. Using the elevation on WS400 through WS441, or the plan views on WS330 through WS371, please indicate the limits of Items ESCR-552.11 4219C, ESCR-552.11 4219CD and ESCR-552.11 4219CI.	Refer to the Cutoff Wall Schedule found on drawing WS441A for stationing extents and breakdown of each pay item.
11	62	Per Bid Booklet page A-23, Pre-Award Process: Section (B) Copy of License: A general contractor is not required to hold a license in New York State to perform work. However, JV will provide the license of subcontractors for the following contracts: Plumbing Work, Electrical Work, and Asbestos Work, if they have been identified at the Pre-Award process stage. Is there any other license you are looking for from General Contractor (JV)?	No other licenses are anticipated to be required, but it remains the responsibility of the Contractor to obtain all required licenses.

Addendum	Addendum Question No.	Bidder's Question	Response
11	63	Addendum 7 Sht 592 - Dwg F409 shows AZ20-700N sheet pile with pay item no ESCR-552.11 46CT which is for AZ-46-700N sheeting. Can you please clarify which is one is correct?	The callout on F409 will be corrected to AZ46-700N SHEET PILE. The item number is correct.
11	64	Addendum 7 Sht 592 - Dwg F409 shows ESCR-552.11 46C pay item that doesn't exist. Can you please clarify?	The item number on F409 will be corrected to ESCR-552.11 46CP.
11	65	Per Dwg. No. WS713 (Sheet 940/2791) in the detail labeled " AASHTO Type I and Type V Beam End Zone Reinforcement", please provide a table or detailed information for the "H" min. horizontal dimension(s) that are required for all Type I and Type V precast/prestressed AASHTO girders.	"H" refers to the girder height (5'-3" for type V and 2'-4" for type 1.
11	66	Per Dwg. No. WS713 (Sheet 940/2791) in Details C-1 and C-2, threaded inserts are to be cast into the ends of the girders, please provide an acceptable Dayton Superior, AL Patterson or equal Model # and the design criteria required to properly determine the required threaded inserts for the filed installed #5 epoxy coated rebar. Also what finish (i.e. plain, epoxy coated, e-galv, or stainless steel) is required for the cast in threaded inserts.	WS713 will be revised to include the following information about the threaded inserts in the callout: PROPOSED THREADED INSERT CAST INTO GIRDER (TYP), SEE NOTE 4 NOTE 4: Threaded inserts used to connect reinforcing steel to precast concrete shall be non-corrosive and shall have a tensile capacity of at least 50% of the yield strength of the reinforcing steel. Threaded inserts shall be stainless steel 1/2" Dayton Superior F-63 flared thin slab coil insert, SS 1/2" MeadowBurke FX-19 ferrule insert, or approved equal.
11	67	According to Article 29 Omitted Work, Commissioner has the right to delete Work from the Contract and Contractor has no right to loss of overheard, indirect cost, or profit with regard to the deleted Work. Section 33 Unit Price Contracts, Part (B) Variations from Engineers' Estimate, in Volume 2 of 3 Bid Booklet states if "the quantities actually required to complete the contract work may be less or more than so estimated, and if so, no action for damages or for loss of profits shall accrue to the contractor for reason thereof." Given the size of the project and vast number of bid items, over a thousand, the referenced provision removes any remedies for underruns and forces bidders to unbalance the bid. While this issue can be managed on smaller projects, given the magnitude of this project, it results in an unmanageable risk exposure because the Contractor does not have any ability to mitigate changes in a unit price contract. Please advise how we should proceed to allocate all fixed indirect costs that are not related to quantities. We recommend a more transparent approach where underruns and omitted work can be partially compensated, when applicable, according to an open book basis, similar to the approach used in federal contracts.	Please refer to the new S-Pages Article B16 Omitted Work in Addendum 11, Article 2.
11	68	REDACTED	

Addendum	Addendum Question No.	Bidder's Question	Response
12	1	Contractor requests the City to include in the contract a mutual waiver of consequential damages clause similar to the following: To the fullest extent permitted by law, each party waives against each other any and all claims for or entitlement to special, incidental, indirect, punitive or consequential damages arising out of, resulting from, or in any way related to the project.	Please refer to Addendum 12, Article 2.
12	2	Project documents shows the traffic signs to be powder coated white. Per MUTCD, traffic signs must be reflective. Can you please clarify? If reflective is acceptable, can you please provide the type of sheeting, e.g. HIP, DG3, etc..	Traffic signs shall be inaccordance with NYCDOT Standard Highway Specification, Section 6.83.
12	3	Junction Chambers JC-D01 and JC-G01 are detailed on Drawings DS535 to DS538. Their locations are shown on Drawings DS303 and DS306. Note 3 on these drawings states that both of these chambers are to be covered under Bid Item 51.11V000. a. The Bid Item quantity for 51.11V000 is listed as 14. b. We have found the locations for only JC-D01 and JC-G01 on the drawings. c. Please clarify the Bid Item quantity for this item.	Refer to PBQ response #71 in Addendum 8. All connections (12) and junction chambers (2) are to be paid under Item No. 51.11V000. Connection details can be found on sheets DS710-DS721.
12	4	One of the doors is missing in the Door Schedule in sheet 2415 / dwg A-580. Can you please provide details on Roll up Door OHD-02 -Track Building Sheet 2377 .	The overhead roll-up door #123 is a type D door and tracked in the door schedule under #123. Refer to Detail #1 and 2 on drawing A-565 for additional information.
12	5	Can you please provide how many lockers are needed in Track Building, Tennis Building and Comfort Building?	For locker sizes and finishes refer to specifications: specialty items. Track: 81 double stacked, Tennis: 6 double stacked, Comfort: None; Total lockers: 87 double stacked
12	6	Please provide more details for pay item 551.30 RS for 24" rock sockets at L-Wall locations. This Item is shows in Esplanade Cross Section I-2 sheet WS625, however the deatails for Platform 1 through 5 sheets WS850 to WS885 A show pay item ESCR-551.30 RS. Please can you clarify.	WS625 will be corrected to show item ESCR-551.30 RS. The pay item ESCR-551.30 RS is for 24” diameter rock sockets within 30" pipe piles at the L-wall locations and details can be seen on drawings WS852, WS862, WS872, WS882, and WS885C.
12	7	Adendum 9 Bid Item Schedule shows Items ESCR-564, ESCR-564.CT, and ESCR-564.G, however the Cross Sections for the Esplanade and Cut Off wall from sheets WS600 to WS629, still are calling all this waler system as Bid Item ESCR-564. Please can you clarify.	The wale system shall be paid under ESCR-564 as uncoated structural steel where stated as such in the WS600 drawing series. ESCR-564.CT is coated structural steel and can be found on drawing FM711. ESCR-564.G is galvanized structural steel and can be found on drawing WS902C.
12	8	Refer to page B-139 (revision #4), Items PK-ESCR 906 A, B, C, D & E - The bid unit on these pages is L.F. The specifications for these items (page PARKS-48R3) specify a pay unit per each. Please clarify.	Please refer to Addendum 12, Article 2.
12	9	Refer to page FW-49R2, section ESCR-4.06 - Concrete in Structures - In section 4.06.1 it specifies that this item is to be used for "curbs". In section 4.06.02 it excludes "curbs". Please clarify. If this is not the payment item for curbs, what is?	As noted in ESCR-4.06.3.(B), ESCR-4.06 covers curbs that are part of "park features." For clarity, this includes all curbs within the park. The exclusion in ESCR-4.06.2 is for roadway elements (curbs, sidewalks, concrete base, and pavement) on roadways outside of the park. These curbs will be paid under the appropriate 4.08 or 4.09 item.

Addendum	Addendum Question No.	Bidder's Question	Response
13	1	Note 4 on Drawing No. 469A of 2791 states that the 18" casings must be installed to a tolerance of 0.25" horizontally and 0.25" vertically. This tolerance is not achievable due to the likelihood of encountering wood debris as described in the boring logs. The best case tolerance for this diameter pipe is 1" on grade and 2" on line. Will this tolerance be acceptable?	The tolerances in the Contract Documents are constructable, however the City will consider VECP proposals for deviations and/or substitutions of the microtunneling design criteria, including upsizing the 66" casing or eliminating the 18" casing. The following criteria will not be permitted to be modified by a VECP: 1) surface settlement criteria, 2) line and grade of the tunnel carrier pipe (42" DIP). The VECP proposal must be submitted in accordance with the requirements of the S-Pages.
13	2	As stated on Note 3 of the same drawing, the proposed design will NOT "prevent excessive movement and assist steering for the 66" MTBM". The installation of the 18" casings will disturb AND weaken the surrounding soils. The casings are too small for manned- entry. Also post-installation contact grouting will NOT be possible either. Without an opportunity to stabilize the disturbed soil of the 18" casings, the weakened ground will remain that way; preventing the installation of the 66" casing on line and grade. Finally, the requirement for a maximum of 1" space between the 66" casing and the proposed installation of the 18" casings is not achievable. According to ASCE publication 36-15, Standard Design and Construction Guidelines for Microtunneling, the vertical installation tolerance for a 66" pipe is +/- 2" for this diameter pipe. Coupled with the difficulties described above and the overlapping overcuts, no microtunneling contractor will be able to install the system successfully as currently designed. Will the NYCDDC consider deleting the 18" casings and permit alternate mitigation measures?	The micotunnel is constructable as described in the Contract Documents, however the City will consider VECP proposals for deviations and/or substitutions of the microtunneling design criteria, including upsizing the 66" casing or eliminating the 18" casing. The following criteria will not be permitted to be modified by a VECP: 1) surface settlement criteria, 2) line and grade of the tunnel carrier pipe (42" DIP). The VECP proposal must be submitted in accordance with the requirements of the S-Pages.
13	3	In addition, will the NYCDDC consider upsizing the 66" casing to allow greater variability in the casing grade installation? A larger diameter casing would allow the contractor to build an invert within the installed casing that conforms to the plan grade. Then the 42" DIP can be installed to the design grade.	The City will consider VECP proposals for deviations and/or substitutions of the microtunneling design criteria, including upsizing the 66" casing or eliminating the 18" casing. The following criteria will not be permitted to be modified by a VECP: 1) surface settlement criteria, 2) line and grade of the tunnel carrier pipe (42" DIP). The VECP proposal must be submitted in accordance with the requirements of the S-Pages.
13	4	Drawing W302, WS341 and WS342 show PAZ42/NZ19 combi-wall between Piers 46 and 51. Profile on drawing WS411 and WS412 shows pipe-pile wall with bottom of pipe-pile cut-off wall el. -66. Drawing WS610 shows 36" steel pipe pile with rock socket. Please clarify type of wall.	Please see latest ammended drawings WS302, WS341, and WS342 that were revised in Addendum 7, Article 2, to match drawings WS411 thru WS412 and WS610. The segment between Piers 46 to 51 is a continuous 36" steel pipe pile wall with alternating rock sockets as shown on revised drawing WS302.
13	5	North and south Embayment platforms and Piers 72 through 76 and 106 through 113 are supported on 24" pipe piles, Bid Item ESCR-551.24.75 C. Bid Item ESCR-551.24.75 DT Dynamic Pile Load Tests has a bid quantity of 5. No axial compression capacity for these piles is provided. Drawing WS500 shows pier piles installed to bedrock. Please clarify if these piles have to be installed to a capacity, the minimum tip elevation provided or seated onto bedrock. If piles will have to extend deeper than the minimum tip elevation to achieve capacity or to be seated onto bedrock will the Contractor be compensated for additional pipe pile splices to advance piles deeper?	Dynamic Pile Test locations and Allowable Compressive Pile Loads for the piles to be installed at the existing north and south embayment esplanade sections are provided on Drawing WS501A. Refer to Section ESCR-551, Sub-section 551.06 for details on pile length measurement for payment.
13	6	Wall turn cutoff-wall configuration on drawing WS417 is different from configuration shown on profile drawing WS347.	Please refer to latest revised ammended drawings WS417 and WS347, in Addendum 7, Article 2, and Addendum 9, Article 4. The wall turns occur at STA. 35+77.56 and at STA. 35+95.78 on both WS417 and WS347 and the cut-off wall configuration is the same.
13	7	Drawing WS627 and WS850 - Section B shows Bid Item ESCR-551.30.01 C for 30" steel pipe piles. Bid Item is described as "Coated 30 in diameter x 1.0 in wall thickness Pipe Pile placed in Jet Grout Column" in Bid Schedule Form. No jet grouting is shown on WS267 and WS850.	There is no jet grouting at these locations. The bid item description is incorrect and should be "COATED 30 IN DIA. X 1.0 IN WALL THICKNESS PIPE PILE." The bid item number is correct as shown on the drawings.
13	8	Drawing WS62, WS850 and WS852. 30" steel pipe pile. Drawing WS627 states "Proposed 24" Diameter 5"-0" Deep Rock Socket". Drawing WS850 and WS852 show 10'-0" rock socket.	The rock socket on drawing WS627 should be a 10 FT deep rock socket. Drawings WS850 and WS852 are correct.
13	9	Drawing WS852. Details for batter piles shows a 12' concrete plug above the rock socket and a 12' concrete plug below cutoff election. Please clarify if pipe pile are to be backfilled with gravel, filled with water, left dry, or other between the upper and lower plug	Drawing WS852 specifies an 8FT concrete plug above the rock socket and a 12FT concrete plug below cutoff elevation. Between the concrete plugs, no special treatment is required - the pipe pile is not required to be backfilled and may be fully or partially full of water.
13	10	Drawing WS628, WS629, WS860 and WS870 lists Bid Items ESCR-551.36.05 CS and ESCR-551.36.05 SD for 30"x .05" pipe pile wall. These Bid Item are not included in the Bid Schedule Form.	Pay items should be ESCR-551.36.05 CSD and ESCR-551.36.05 CS. Drawings WS628 to WS629 will be revised to include the correct item ESCR-551.36.05.CSD instead of item ESCR-551.36.05 SD where applicable. Item ESCR-551.36.05 CS is correct, however, and shall be used for 50% of the quantity of pipe pile wall, as described in drawing WS441A. Refer to Addendum 13, Article 2.

Addendum	Addendum Question No.	Bidder's Question	Response
13	11	Drawing FG272, Note 4 calls for a lateral and compression pile load test. No lateral or axial pile capacity is provided. Also Note 2 on Drawings FO22 and FO23 states "Steel pipe piles shall be vibrated into the jet grout before the jet grout cures or the jet grout shall be drilled and steel pipe piles installed after the jet grout cures." Please clarify load test requirements and provide lateral and axial pile capacity.	The axial load capacity for the pipe piles at 14th street, including pipe piles installed in jet grout, are 100 tons compression and 50 tons tension. This information will be added to drawing FG272.
13	12	Reference Specification ESCR-551 Steel Pipe Piles. Paragraph 551.03 (C) and Bid Schedule Form Bid Item ESCR-551.24.75 C, ESCR-551.42.06 C and ESCR-551-42.06 D. Please clarify if these bid item require coating.	ESCR-551.24.75 C includes coating. ESCR-551-42.06 D is the predrilling pay item for ESCR-551-42.06 and these two items do not include coating. ESCR-551.42.06 C is not in the cost estimate nor the specifications.
13	13	Subsurface information provided for Reach I and J shows that the upper 40 feet of the soil layers are contaminated with tar/diesel, gasoline and NAPL contaminants. We understand remediation work is being carried out at the site of these layers. However, we are not clear about what the current status of the site is in terms of remediation. a. Is the site clear of these contamination in the DSM work area? What method of remediation was used? b. What is the extent of the NAPL contamination we need to consider for the DSM work? c. What enviornmental aspects need to be considered during the drilling of these layers dursing DSM work?	The current status of the contamination is as presented in the bid documents. This represents the conditions anticipated for construction, no remediation has been conducted and none is anticipated in advance of construction. a. The contamination as presented in the bid documents remains beneath the subsurface within the DSM work area. b. The entirety of the DSM area shall be considered to be impacted with NAPL contamination, with vertical contamination becoming more prevalent near the groundwater interface to depths of 40 feet or more. c. DSM work will occur throughout the area of contamination. Spoils generated will likely be impacted with MGP contaminants; however, they are to remain at the surface within Reaches I and J for use as part of the transfer platform. Workers shall be OSHA HAZWOPER trained. Material handling shall comply with the MGP Waste Management Plan and Health and Safety Plan included as Appendices B and C of the Mitigation Work Plan.
13	14	Please provide the pH, sulphate and chloride content values for each stratum identified in Reach I and Reach J.	These analytes were not sampled for during previous subsurface investigations. Thus, this data is not available. Any pre-characterization sampling for waste characterization or for other purposes is the Contractor's responsibility.
13	15	Are there any Laboratory Bench Scale tests conducted with these soils to determine possible mix designs for the DSM work?	No
13	16	Is there a maximum clear/unsupported spacing requirement between the DSM columns that must not be exceeded?	Yes, the maximum is two soil mix column's diameter spacing from center-to-center of the soil mix columns.
13	17	What is the height of the Fill in the DSM Areas?	Fill height vaires (El. 9.0'-24.0'). See sheet LG308-309 for site grading.
13	18	What is the maximum depth expected for the DSM equipment?	The maximum depth for the DSM equipment is approximately 68 feet.
13	19	We are currently assuming a DSM working platform elevation of +7.5 ft. The bottom elevations of DSM provided in Project Area 1, Reaches I and J, are El. -40 ft. El. -52 ft. and El. -60 ft. Please confirm that the bottom of DSM column is not expected to key into the bedrock.	It is confirmed that it is not expected to key into the bedrock.
13	20	Will special handling be required for the DSM spoils? Will the DSM spoils be treated as hazardous waste?	Yes, special handling will be required for the DSM spoils. Workers shall be OSHA HAZWOPER trained. Material handling shall comply with the MGP Waste Management Plan and Health and Safety Plan included as Appendices B and C of the Mitigation Work Plan. DSM spoils will not be treated as hazardous waste.
13	21	DSM Spec 203.99010039 C. Mix Design, Table 1.in Page 2/5, Is the DSM acceptance criteria based on wet grab samples or core samples? Please clarify.	Wet grab samples.
13	22	DSM Spec 203.99010039 C. Mix Design Page 3/5mentions 'Grout soil mixing shall be performed using minimum binder injection volume of 35%. Please confirm that 35% is the volume of grout with respect to the volume of in-situ soil not the volume of dry binder with respect to the volume of in-situ soil.	Yes, confirmed.
13	23	DSM Spec 203.99010039; Please confirm that the Acceptance criteria is an average UCS of 200 psi at 28-days and that 70% of the core samples per full depth core should have UCS greater than 115 psi at 28-days.	Yes, the wet grab samples shall have an average UCS of 200 psi after 28 days and 70% of the core samples per depth full depth core shall have a minimum UCS of 100 psi after 14 days.
13	24	DSM Spec 203.99010039; Unit weight of the soil-cement is controlled by the unit weight of the in-situ soil and the unit weight of the grout. A unit weight of 105 pcf does not seem to be obtainable. e.g. For the stratum 2 clay in Reach I, the total unit weight is 105 pcf and if we use a grout of w:c 1:1, the unit weight of grout is 95 pcf, this will bring the unit weight of the soil-mix to lower than 105 pcf. Therefore, we request this unit weight requirement be waived.	This requirement will be waived for soils that are shown in the provided boring logs to have a unit weight less than 110 pounds per cubic foot.

Addendum	Addendum Question No.	Bidder's Question	Response
13	25	DSM Spec 203.99010039;D. Soil-Binder Mixing Page 3/5 mentions use of Predrill for soil with a plasticity index PI>20 to prepare the soil for modification at no additional cost. Is this a requirement even if the DSM contractor based on their experience and equipment determines that predrilling on these soils may not be required?	It is not required, if proven in the demonstation program.
13	26	DSM Spec 203.99010039;D. Soil-Binder Mixing Page 4/5, first paragraph mentions that the grout injection should be continued while removing the mixing equipment from the bottom of the holes to the top. Is this still a requirement when designed volume of grout is injected on the way to the bottom?	It is not required, if proven in the demonstation program.
13	27	Concerning item PK-ESCR 650-Temporary Power for Fire Boat House. The bid schedule per Addendum #12 says that 1 month of temporary service is required but according to the attached specification temporary power is required from September 1st to March 31st (6 months). Can you please confirm if you need 1 month of temporary power or 6 months? Or is temporary power needed for multiple years between September 1st to March 31st during the duration of the contract?	18 months are required. The bid schedule has been revised. Refer to Addendum 13, Article 2.
13	28	Under what pay item is 4" HDPE paid under? (reference drawings PUE300-PUE301).	4" conduit on drawings PUE300 & PUE301 is Hot Dipped Galvanized Rigid Steel Conduit, Item PK-ESCR 674. There is no 4" HDPE conduit.
13	29	Under what pay item is 25' Aluminum shaft with 12' aluminum arm paid under? (reference drawings BT206).	All aluminum arms shall be 8', payable under Item SL-24.02.02
13	30	On the streetlighting drawings (Sl300-Sl310) what pay items does the removal of the overhead cable, removal of the existing wooden utility pole, and the installation of the 17'-10 ¾" aluminum shaft with 8' aluminum arm on structure get paid under?	The payment for removal of the overhead cable shall be under Item No. SL-21.09.05. The payment for installation of the 17'-10 3/4" aluminum shaft shall be included under Item. No. SL-21.04.14. The payment for installation of the 8' aluminum arm shall be included under SL-24.02.02.
13	31	On drawing TS300, under what pay item does the installation of the 12" traffic signals on mast arm get paid under?	See revised bid schedule form, Addendum 13, Article 2.
13	32	On drawings PUEW301- PUEW 303 what pay items does the removal of the wires from existing underground conduit and the cleaning of the conduit get paid under?	Payment for all electrical removals shall be included under item ESCR 6.01 AB, clearing and grubbing.
13	33	On drawing PUE706 under what pay item does the 1 ¼" innerduct get paid under?	There is no 1 1/4" innerduct on drawing PUE706. See latest revised drawing in Addendum 9, Article 4, that only shows 1" Innerduct which will be paid under Item PK-ESCR 786.
13	34	On drawing PUE330 under what pay item does the 1 ½" innerduct get paid under?	There is no 1 1/4" innerduct on drawing PUE330. See latest revised drawing in Addendum 9, Article 4, that only shows 1" Innerduct which will be paid under Item PK-ESCR 786.
13	35	Reference Q&A responses 10-3 "Any obstruction encountered in the top 30' of site clearance shall be removed by the contractor at no additional cost to the client." a.Please clarify if this applies to the waterfront combi-wall/pipe-pile wall. b.Please confirm that this does not apply to timber piles identified on the WS110 series drawings as "Existing timber batter pipe to be pre-drilled along locations of proposed cut-off wall."	The phrase noted "Any obstruction in the top 30'...." is related to the pedestrian bridge foundation H piles. The note is found on Drawings BD001 (note 17), BT001 (Note 17) and BH001 (Note 16). It does not apply to the esplanade structure.
13	36	Reference drawing WS003. Note on cross section states "Intermediate sheet pile to be driven until it hits existing timber piles." Please confirm that this statement applies to all intermediate sheets piles of the combi-wall.	Please refer to WS600-WS629 for detailed cross sections and where this statement applies. Section shown on WS003 is typical but does not apply everywhere.
13	37	Reference Specification ESCR-552.02 (D) and Bid Item ESCR-552.11.46CPL. No sheet pile splicing details are provided. a.Please clarify if sheet pile splices requires full penetration welds or if splice plates/sheet pile splicer are acceptable. b.Please confirm that sheet pile splices only requires visual inspection of weld.	The following will be added to Section ESCR-552: All pile splices shall be full penetration butt welds with cover plates and shall develop the full strength of the sheet pile. An approved jig or alignment device shall be used to maintain the required straightness of the sheet pile. All splices shall be non-destructively tested by an AWS Certified Welding Inspector (CWI) using both VT and UT for the 100 percent of the weld length.
13	38	Approximate pre-drill percentage Piers 164 to 167, 50%. Drawing WS130 shows all existing timber piles interfering with cut-off wall installation to be removed. Are we to anticipate other obstructions than timber piles?	The plumb and batter piles identified for removal have been identified based upon expected ability to pull timber piles from the mudline. In addition to these piles the drawings identify existing timber batter piles which are not accessible for removal, additionally it may not be possible to remove all piles identified for removal. It is the expectation of the design team that the primary risk for obstructions will be the remaining timber piles of the low-level relieving platfor. However, historic photos and plans indicate existence of pile supported piers along the East River waterfront in this area, which were demolished for construction of the park, no pile plans or records exist for these piers, but it is possible that derelict piles will be encountered.

Addendum	Addendum Question No.	Bidder's Question	Response
13	39	Item No. ESCR-552.11 4219CD - Coated PAZ42/NZ19 or equal Combi-Wall installed in Pre-Drilled Locations: please clarify measurement terms applicable to this item: -Bid document instructions, for bidding purposes, are to assume 30% of the combi-wall alignment and 50% of the continuous pipe pile alignment (when the alignment crosses through the existing timber piling) will require pre-drilling.	Quantities assumed for predrilling and standard pile, sheet pile, and combi-wall installations are provided for bidding purposes. Prior to commencement of pile installation works the Contractor and the Engineer shall agree upon criteria for pre-drilling. Actual quantities of pre-drilling will be captured in the field and may vary from the assumed quantities used in development of the bids.
13	40	Item No. ESCR-552.11 4219CD - Coated PAZ42/NZ19 or equal Combi-Wall installed in Pre-Drilled Locations: please clarify measurement terms applicable to this item: -Section 552.06 specifies the horizontal length of wall applicable. What about the vertical length?	Refer to latest Section 552.06, revised in Addendum 10, Article 2: "The vertical height shall be the sheetpile length measured from final cut-off elevation to sheetpile tip elevation."
13	41	Spec section ESCR-552 – Steel Sheet Piling says “The outboard face of sheet piling and king piles shall be coated …” Please confirm that only one side of the sheet pile is to be coated.	Yes, for instances where the outboard face of sheet piling and king piles are to be coated, this indicates only the waterside of the sheet pile and king pile (inclusive of the welded connectors) is to be coated. Please refer to Section ESCR-559.05 (D) for coating application specifications.
13	42	Specification section 233113 / 1.4 A mentions that “AC unit manufacturer shall approve the air performance and acoustical performance of the A/C units in the location and with the ductwork configuration and construction as shown on the ductwork shop drawings and A/C unit manufacturer shall indicate its approval directly on shop drawings”. Based on our communication with the specified manufacturers , Greenheck and Mitsubishi do not intend to review and approve the contractor’s ductwork shop drawings. Please advise if such requirement specifically applies to this project and how it is to be handled, since the manufacturers do not provide such service. Specification section 23 3113 / 3.09 A and B mention that duct distribution system shall be tested for leakage. Reference is to be made to specification section 230593. Such testing section 230593 does not mention any specific guidelines for leak testing the ductwork. The specified air handling equipment (Greenheck and Mitsubishi) is of low operating static pressure. Please advise if the specific project’s ductwork requires to be leak tested by including the test’s static pressure limit. Duct specification 233113 states: A) Part 1 -------“ Ductwork material shall be Galvanized sheet steel 20 gauge , unless otherwise indicated. Contractor shall provide 1” acoustic insulation inside, per drawings”. B) Part 1.6C ---“All sheet metal used on the project shall be constructed from Galvanized steel sheets --“. C) Part 2.05 B –“ Galvanized sheet steel “. Drawing M-500.00 M-600.00 General note 15; Drawing M-700.00 General note 13; state that ” all new ductwork shall be of size indicated and aluminum duct, 18 gage with insulation and liner”. Are the new ducts supposed to be Galvanized or Aluminum? What gauge 20 or 18? Symbol “AL”: “Acoustic liners” is not shown on the duct layout drawings M-502.00 . Only certain duct sections shown on drawing M-602 & M-702 have the dotted line indication of lining. Please confirm that only the duct sections having dotted lines receive acoustic lining.	-The paragraph 1.4A will be removed from the specifications section 233113. -The paragraph 3.09 will be removed from the specifications section 233113. -All new duct shall be galvanized steel schedule 20, Contract Drawings will be updated accordingly. -The lining has been added to drawing M-502, see Addendum 13, Article 4. -Confirmed, duct sections having dotted lines receives acoustic lining.

Addendum	Addendum Question No.	Bidder's Question	Response
13	43	There is no specs section for HVAC piping insulation. Specification section 238113- 1.01 D refers to section 230719. But this section is missing. Please provide piping insulation section.	For Refrigerants use flexible Elastomeric Foam 1" thick, Flexible Elastomeric Foam Insulation: 1. FM tested and approved, meeting the following: a.) Maximum Water Vapor Transmission: 0.10 perm - inch based on ASTM E 96, Procedure A. b.) K of 0.27 at 75 degrees F based on ASTM C 518 or C 177. c.) Fire Spread/Smoke Developed Rating: 25/50 or less based on ASTM E 84. For Condensate drain use fiberglass insulation, minimum density 3pcf; ASTM C547. For High Density Jacketed Insulation Inserts for Hangers and Supports: 1. For Use with Fibrous Glass Insulation a.) Cold Service Piping:Polyurethane Foam: Minimum density 4 pcf, K of 0.13 at 75 degrees F, minimum compressive strength of 125 psi For Jacketing:Laminated Vapor Barrier Jackets for Piping: Factory applied by insulation manufacturer, conforming to ASTM C 1136, Types I and II. 1. Type I: Reinforced white kraft and aluminum foil laminate with kraft facing out. a.) Pipe Jackets: Furnished with integral 1-1/2 inch self sealing longitudinal lap, and separate 3 inch wide adhesive backed butt strips.
13	44	Reference Q&A response 9-211 and 9-212 and drawing WS441A. a.Bid Item ESCR-551.36.05.CS and ESCR-551.36.05.SD are not included in Bid Schedule Revision #6.	Item ESCR-551.36.05.CS has been added to the bid schedule; refer to Addendum 13, Article 2. Item ESCR-551.36.05.SD is not a valid pay item and should be item ESCR-551.36.05.CSD.
13	45	Refer to Sheets WS603 & 604. Crossections D-2 & D-3 show Architectural Form Liner item ESCR 75. Bid Schedule Form does not list item ESCR 75. Please clarify.	ESCR-75 will be removed from WS603, WS604, WS618, & WS619. The cost for the pile cap at the proposed embayments shall be paid under ESCR-4.06 HP ES.
13	46	Refer to sheet WS761, details 2 & 3. Both details show item 565.14200008. Details of upper & lower sliding plates are different in purpose and geometry. It is not clear how the Bid quantity of the item 565.14200008 (1,209 EA) could be applied to this slide elements. Shouldn't the quatity be LF?. Shouldn't upper and lower sliding elements be different items?	565.14200008 is a standard NYSDOT pay item and the unit of measurement is EA; please refer to the standard specification referenced from the PROJECT DESCRIPTION pages. In the scenario when you have an upper and a lower sliding element, as shown in Detail 3 on WS761, these would be quantified individually (so 2 EA).
13	47	Refer to sheet WS761, sliding details 1, 1A , 1B. All those details list steel elements like: 17"x1/2" galvanized plate, 5-1/2"x8" galvanized filler plate, 6" x6" x1/2" galvanized angles, and 1/8" x2'-3" protective steel plate. Enlarged detail 4 does not show all those those listed sliding joints elements. Item ESCR-567.LG indicates only 17" x1/2" galvanized plate on detail 4. Please clarify what constitutues item ESCR-567.LG & provide a complete detail 4.	WS761 Detail 4 will be revised to include item number ESCR-567.PC for the 1/8" x 2'-3" Protective Steel Plate and will include callouts for the angles and filler plates.
13	48	Bid Item 0459 ESCR-551.24.75.C - 24 IN. DIAMETER X 0.75 IN. WALL THICKNESS STEEL PIPE PILE does not specify that it is coated. However these same piles were moved from Bid Item 0455 ESCR-551.24.05.C - COATED 24 IN. DIAMETER X 0.5 IN. WALL THICKNESS STEEL PIPE prior to addenda 6 which specifies coating. Please confim if either the 24in LWALL piles or the 24in Embayment Platform Piles within bid item ESCR-551.24.75.c need to be coated?	Yes, piles under pay item ESCR-551.24.75.C require coating. The description for pay item ESCR-551.24.75.C should be "COATED 24 IN. DIAMETER X 0.75 IN. WALL THICKNESS STEEL PIPE PILE," as stated at the end of Section ESCR-551 in the specifications.
13	49	Reference 36in Continuous Pile wall Plan sheet 764(WS342) cross section sheet 883 (WS610). The cross section denotes the proposed cut-off wall as type VIII. Rebar pile plug detail VIII on sheet 954 (WS759) is for a 42in pile not a 36in pile. The same piles are listed in chart on sheet 959 (WS754) as type VII - limits 26+31.52 to 26+86.76. Please provide clarification.	The callout on WS759 Detail 8 will be revised to: "PROPOSED 36"Ø, 1/2" THICK CONTINUOUS PIPE PILE WALL ITEM NO ESCR-551.36.05.C"
13	50	Refer to Bid Sheets (revision #6) - Item PK-668, Parks Leaf Manhole Cover & Frame and Item PK-ESCR 692, Parks Leaf Manhole Cover & Frame appear to be the same item. If these are different items, please provide descrition for Item PK-ESCR 692.	The item description for PK-ESCR 692 in the bid schedule has been revised to read "Electric Cabinet and Panel Work at East River Houses Parking Lot". Refer to Addendum 13, Article 2.
13	51	Refer to Bid item PK-ESCR 692, Parks Leaf Manhole Cover & Frame - The bid unit listed is "L.S.". Should this be "Each"? If L.S. is correct, please provide quantity of castings to be paid under this item.	The item description for PK-ESCR 692 in the bid schedule has been revised to read "Electric Cabinet and Panel Work at East River Houses Parking Lot". Refer to Addendum 13, Article 2.
13	52	Does the existing topsoil have to be removed prior to filling the site? If so, under what item is this work paid for?	Topsoil removal is paid under item 6.02 AAN. Drawing SM318 has been revised. Refer to Addendum 13, Article 4.

Addendum	Addendum Question No.	Bidder's Question	Response
18	1	Reference is made to Q & A #46, Addendum #13. Your answer states that item 565.1420008 is a standard NYSDOT. The closest we could identify is item 565.1421 which is a NYSDOT item for Fixed Bearings. Nonetheless detail on sheet WS761 shows sliding elements that are paid under item 565.1420008. No longitudinal lengths are given for each of the elements. Since the subject item units are given 'EACH' we need to know the units length. Please clarify.	Item 565.14200008 is correct. The specification is available from the NYSDOT Pay Item Catalog (www.dot.ny.gov/pic) as noted in the Project Description pages.
18	2	In conjunction with question 58 above, reference is made to Q & A #47, Addendum #13. Your answer states that Detail 4 will be revised to include item number ESCR-567.PC, and to include protective steel plates, etc. As of this moment we have not received drawings showing revisions of Detail 4. Please clarify.	The revised drawing will be provided post bid. WS761 Detail 4 will be revised to include item number ESCR-567.PC for the 1/8" x 2'-3" Protective Steel Plate. Detail 4 will also be revised to include callouts for the angle and filler plate, which are both paid under ESCR-567.LG as shown in Detail 1B.

PARKS - PAGES

SPECIAL PARKS SPECIFICATIONS

SANDRESM1

The specifications in the PARKS-Pages cover the construction of park amenities within East River Park, including lighting, plumbing, paving, furnishings, plantings, and associated works as well as sewer works.

The PARKS-Pages supplement the specifications shown on the Specifications and Standards of New York City sheet at the beginning of this Volume 3, which apply to the work except as modified in these Contract Documents.

(NO TEXT ON THIS PAGE)

TABLE OF CONTENTS

Section	Description	Page No.
SECTION ESCR-4.06	CONCRETE IN STRUCTURES *SEE BOOK 3 FLOODWALL FOR SECTION ESCR-4.06, WHICH APPLIES TO THE WORK COVERED IN THE PARKS-PAGES*	
SECTION ESCR-6.01	CLEARING AND GRUBBING	1
SECTION PK-227B ADA	GRANITE BLOCK ON SAND – ACCESSIBLE	5
SECTION PK-ESCR 0-05	TREE REMOVAL	7
SECTION PK-ESCR 028	EXPOSED AGGREGATE CONCRETE PAVEMENT	9
SECTION PK-ESCR 031	GALVANIZED ESPLANADE SEA RAIL	13
SECTION PK-ESCR 032	STEEL BLEACHERS	21
SECTION PK-ESCR 033	BOULDERS	26
SECTION PK-ESCR 036	PRE-CAST CONCRETE	37
SECTION PK-ESCR 039	BENCH, 1939 WF RPL SLATS	49
SECTION PK-ESCR 042	SITE FURNISHINGS	53
SECTION PK-ESCR 044	PNEUMATIC EXCAVATION AROUND TREES	57
SECTION PK-ESCR 077	PIPE RAIL FENCE	61
SECTION PK-ESCR 081	CLAY STORAGE BOX	63
SECTION PK-ESCR 097	PLAY EQUIPMENT – 10TH STREET	65
SECTION PK-ESCR 103	SIGNAGE AND WAYFINDING (BIKEWAY)	72
SECTION PK-ESCR 105	THERMOPLASTIC EXTRUDED LINES	74
SECTION PK-ESCR 106	THERMOPLASTIC HFPRM LINES, SYMBOLS	78
SECTION PK-ESCR 109	SOD NEW LAWN	81
SECTION PK-ESCR 110	INSTALL PLANT MATERIAL	86
SECTION PK-ESCR 111	SYNTHETIC TURF-INFILL TYPE ON STONE BASE	100
SECTION PK-ESCR 1218S	STUMP REMOVAL	109
SECTION PK-ESCR 132	COLOR SEAL COAT SYSTEM	111
SECTION PK-ESCR 140	TRANSPLANT TREE	114
SECTION PK-ESCR 148	GEOTEXTILE - DRAINAGE	120
SECTION PK-ESCR 149	GEOTEXTILES – SEPARATION, STABILIZATION	123
SECTION PK-ESCR 152	BENCH, 1964 WF RPL SLATS	125
SECTION PK-ESCR 155	BENCH, TYPE C (SPORTS)	128
SECTION PK-ESCR 156	BICYCLE RACK – HOOP	131
SECTION PK-ESCR 158	PICNIC TABLE FIXED	133
SECTION PK-ESCR 161	PUBLIC SPACE RECEPTACLE BINS	136
SECTION PK-ESCR 170	STEEL FENCE AND GATES	138
SECTION PK-ESCR 178	BASEBALL ACCESSORIES SET	141
SECTION PK-ESCR 180	BASKETBALL BACKSTOP-SINGLE POST	142
SECTION PK-ESCR 181	HOODED BASEBALL BACKSTOP	145
SECTION PK-ESCR 182	PREPARE SKINNED AREA	150

SECTION PK-ESCR 183 – SOCCER GOAL, PORTABLE 152
SECTION PK-ESCR 184 – TENNIS COURT ACCESSORIES SET 154
SECTION PK-ESCR 185 – PAINT LINES 4 INCH – SYNTHETIC TURF 156
SECTION PK-ESCR 188 – POLYETHYLENE PIPE, PERFORATED NON PERF 157
SECTION PK-ESCR 191 – ASPHALT BLOCK ON CONCRETE BASE 160
SECTION PK-ESCR 210 – PAINT LINES 4 INCH – LAWN CLAY AREA 164
SECTION PK-ESCR 214 – CUSTOM 1964 WORLD'S FAIR SITE FURNISHINGS 165
SECTION PK-ESCR 221 – STAINLESS STEEL HAND RAIL 169
SECTION PK-ESCR 400 RECONSTRUCT DRAINAGE STRUCTURE 170
SECTION PK-ESCR 401 – ADJUST TOP OF UTILITY STRUCTURE TO GRADE 172
SECTION PK-ESCR 402 CATCH BASIN COVER AND FRAME WITH BALLAST SCREEN .. 173
SECTION PK-ESCR 403 – DUCTILE IRON SEWER PIPE – 18" DIA. 175
SECTION PK-ESCR 404 – DUCTILE IRON SEWER PIPE – 24" DIA. 176
SECTION PK-ESCR 405 - PRECAST CONCRETE DRYWELL 177
SECTION PK-ESCR 450 – IP PTZ HDTV DOME CAMERA AND MOUNTING ASSEMBLY .. 178
SECTION PK-ESCR 451– VEHICLE TRANSMIT TAG READER OSS-1 JACKSON AV 194
SECTION PK-ESCR 452 – VEHICLE TRANSMIT TAG ANTENNA OSS-1 JACKSON AV 194
SECTION PK-ESCR 453 – VEHICLE TRANSMIT TAG READER OSS-8N FDR NORTH 194
SECTION PK-ESCR 454 – VEHICLE TRANSMIT TAG ANTENNA OSS-8N FDR NORTH 194
SECTION PK-ESCR 455 – VEHICLE TRANSMIT TAG READER OSS-8S FDR SOUTH 194
SECTION PK-ESCR 456 – VEHICLE TRANSMIT TAG ANTENNA OSS-8S FDR SOUTH 194
SECTION PK-ESCR 461 – NEMA 3R ITS SIGNAL CABINETS, TYPE P44 203
SECTION PK-ESCR 462 – NEMA 3R ITS SIGNAL CABINETS, TYPE 344 203
SECTION PK-ESCR 463 – NEMA 3R ITS SIGNAL CABINETS, TYPE ATSC-12 203
SECTION PK-ESCR 464 – NEMA 3R ITS SIGNAL CABINETS, TYPE ATSC-8 203
SECTION PK-ESCR 465 – RADAR BASED TRAFFIC MEASURING SENSOR (RTMS) 212
SECTION PK-ESCR 466 – ITS CAT 6 OUTDOOR ETHERNET CABLE-GEL FILLED 218
SECTION PK-ESCR 467 – ITS REMOVALS 220
PK-ESCR-468 LED FULL COLOR VARIABLE MESSAGE SIGN (VMS) - OSS-1 222
PK-ESCR-469 LED FULL COLOR VARIABLE MESSAGE SIGN (VMS) - OSS-8S 222
SECTION PK-ESCR 691 – BRICK MASONRY/PRECAST CONCRETE FOR DRAINAGE STRUCTURE 252
SECTION PK-ESCR 600 – SAND BASE FOR UTILITY LINE 254
SECTION PK-ESCR 601 – WET CONNECTION – 6" DIA. 255
SECTION PK-ESCR 602 – WET CONNECTION – 8" DIA. 255
SECTION PK-ESCR 609 – WET CONNECTION – 4" DIA. 255
SECTION PK-ESCR 603 – RPZ AND WATER METER W/REMOTE AND HEATED ENCLOSURE 257
SECTION PK-ESCR 605 – 4" DIA. DUCTILE IRON CEMENT WATER PIPE LINE 265
SECTION PK-ESCR 606 – 6" DIA. DUCTILE IRON CEMENT WATER PIPE LINE 265
SECTION PK-ESCR 607 – 8" DIA. DUCTILE IRON CEMENT WATER PIPE LINE 265

SECTION PK-ESCR 608 – 10” DIA. DUCTILE IRON CEMENT WATER PIPE LINE 265
SECTION PK-ESCR 610 – GATE VALVE – MECHANICAL JOINTS – 4" DIA. 267
SECTION PK-ESCR 611 – GATE VALVE – MECHANICAL JOINTS – 6" DIA. 267
SECTION PK-ESCR 612 – GATE VALVE – MECHANICAL JOINTS – 8" DIA. 267
SECTION PK-ESCR 613 – GATE VALVE – MECHANICAL JOINTS – 10" DIA. 267
SECTION PK-ESCR 614 – QUICK COUPLING VALVE AND VACUUM BREAKER WITH CHAMBER 268
SECTION PK-ESCR 615 – FIRE HYDRANT WITH FENDERS 271
SECTION PK-ESCR 616 – DECORATIVE STEEL SPRAY FIXTURES DELANCEY STREET 274
SECTION PK-ESCR 617 – DECORATIVE STEEL SPRAY FIXTURES HOUSTON STREET 274
SECTION PK-ESCR 618 – DECORATIVE STEEL SPRAY FIXTURES 10TH STREET 274
SECTION PK-ESCR 619 – SPORTS STEEL SPRAY FIXTURE 281
SECTION PK-ESCR 620 – WATER TAP 1½" DIA. 285
SECTION PK-ESCR 621 – WATER TAP 2" DIA. 285
SECTION PK-ESCR 622 – CURB AND PROPERTY LINE VALVES – 1½" DIA. 287
SECTION PK-ESCR 623 – CURB AND PROPERTY LINE VALVES – 2" DIA. 287
SECTION PK-ESCR 624 – RPZ & WATER METER W/REMOTE AND STRUCTURE – 1½" DIA. 289
SECTION PK-ESCR 625 – RPZ & WATER METER W/REMOTE AND STRUCTURE – 2" DIA. 289
SECTION PK-ESCR 626 – PLUG VALVE – 1" DIA. 296
SECTION PK-ESCR 627 – PLUG VALVE – 1¼" DIA. 296
SECTION PK-ESCR 628 – PLUG VALVE – 1½" DIA. 296
SECTION PK-ESCR 629 – PLUG VALVE – 2" DIA. 296
SECTION PK-ESCR 630 –TYPE "K" COPPER TUBING – 1" DIA. 297
SECTION PK-ESCR 631 – TYPE "K" COPPER TUBING – 1¼” DIA. 297
SECTION PK-ESCR 632 – TYPE "K" COPPER TUBING – 1½” DIA. 297
SECTION PK-ESCR 633 – TYPE "K" COPPER TUBING – 2" DIA. 297
SECTION PK-ESCR 638 – TYPE “K” COPPER TUBING – 3” DIA. 297
SECTION PK-ESCR 634 – CAST IRON VALVE BOX, 5¼" DIA. 299
SECTION PK-ESCR 635 – BOTTLE FILLER 300
SECTION PK-ESCR 636 – BOTTLE FILLER W/DOG BOWL 300
SECTION PK-ESCR 637 – BOTTLE FILLER W/HI-LO DRINKING FOUNTAIN BASINS 300
SECTION PK-ESCR 640 – GROUND HYDRANT – 1” DIA. 306
SECTION PK-ESCR 641 – IN-GROUND IRRIGATION SYSTEM-AUTOMATIC 309
SECTION PK-ESCR 642 –GAS SERVICE MAIN – 2” DIAMETER 322
SECTION PK-ESCR 643 - GAS SERVICE MAIN – 3” DIAMETER 322
SECTION PK-ESCR 644 – SERVICE WEIGHT CAST IRON SOIL PIPE – 4” DIA. 323
SECTION PK-ESCR 646 – MISCELLANEOUS IRON AND STEEL 324
SECTION PK-ESCR 650 – TEMPORARY POWER FOR FIRE BOAT HOUSE 325
SECTION PK-ESCR 651 – ELECTRIC VEHICLE SINGLE CHARGING STATION 327

SECTION PK-ESCR 652 – ELECTRIC VEHICLE DUAL CHARGING STATION 327
SECTION PK-ESCR 653 – PHOTOVOLTAIC SYSTEM – SOUTHERN M&O CANOPY..... 331
SECTION PK-ESCR 654 – PHOTOVOLTAIC SYSTEM – NORTHERN M&O CANOPY 331
SECTION PK-ESCR 655 – ELECTRIC SERVICE AND DISTRIBUTION WORK AT CENTRAL M&O FACILITY 340
SECTION PK-ESCR 656 – ELECTRIC SERVICE AND DISTRIBUTION WORK AT NORTHERN M&O FACILITY 340
SECTION PK-ESCR 657 – ELECTRIC SERVICE AND DISTRIBUTION WORK AT AMPITHEATER AREA AND FLOODLIGHTING 340
SECTION PK-ESCR 658 – ELECTRIC SERVICE AND DISTRIBUTION WORK AT GRAND STREET FERRY 340
SECTION PK-ESCR 664 – ELECTRIC SERVICE AND DISTRIBUTION WORK AT EAST 10TH STREET BRIDGE STORAGE ROOM..... 340
SECTION PK-ESCR 692 – ELECTRIC CABINET AND PANEL WORK AT EAST RIVER HOUSES PARKING LOT 340
SECTION PK-ESCR 660 – SPORTS FIELD FLOOD LIGHTING – FIELDS 1 & 2..... 348
SECTION PK-ESCR 661 – SPORTS FIELD FLOOD LIGHTING – FIELD 6..... 348
SECTION PK-ESCR 662 – LED SOLAR LIGHT 358
SECTION PK-ESCR 663 – LED 120 VOLT LIGHT SIMILAR TO SOLAR LIGHT 358
SECTION PK-ESCR 669 – 2" DIA. HIGH DENSITY POLYETHYLENE (HDPE) SCHEDULE 80 CONDUIT 360
SECTION PK-ESCR 645 – 1” DIA. HOT DIPPED/HEAVY GAUGE GALVANIZED RIGID STEEL CONDUIT 362
SECTION PK-ESCR 670 – ¾" DIA. HOT DIPPED/HEAVY GAUGE GALVANIZED RIGID STEEL CONDUIT 362
SECTION PK-ESCR 671 – 1½" DIA. HOT DIPPED/HEAVY GAUGE GALVANIZED RIGID STEEL CONDUIT 362
SECTION PK-ESCR 672 – 2" DIA. HOT DIPPED/HEAVY GAUGE GALVANIZED RIGID STEEL CONDUIT 362
SECTION PK-ESCR 675 – TELEPHONE CONDUIT – 4" DIA. 364
SECTION PK-ESCR 676 – PULLBOXES WITH FRAME AND COVER 24" L X 18" W X 26" D, TYPE 2418 (2-R)..... 366
SECTION PK-ESCR 677 – PULLBOXES WITH FRAME AND COVER 36" L X 24" W X 26" D, TYPE 3624 (5-R)..... 366
SECTION PK-ESCR 678 – PULLBOXES WITH FRAME AND COVER 48"L X 24" W X 26" D, TYPE 4824 (6-R)..... 366
SECTION PK-ESCR 679 – ELECTRICAL MANHOLES..... 368
SECTION PK-ESCR 666 #10 AWG COPPER, 600V WIRE 371
SECTION PK-ESCR 667 #8 AWG COPPER, 600V WIRE 371
SECTION PK-ESCR 668 #4 AWG COPPER, 600V WIRE 371
SECTION PK-ESCR 680 – #12 AWG COPPER, 600V WIRE 371
SECTION PK-ESCR 681 – #6 AWG COPPER, 600V WIRE 371
SECTION PK-ESCR 682 – #2 AWG COPPER, 600V WIRE 371
SECTION PK-ESCR 683 – #1/0 AWG COPPER, 600V WIRE 371

SECTION PK-ESCR 684 – #4/0 AWG COPPER, 600V WIRE 371
SECTION PK-ESCR 685 – 500 KCMIL COPPER, 600V WIRE 371
SECTION PK-ESCR 686 #2/0 AWG COPPER, 600V WIRE 371
SECTION PK-ESCR 688 – STAINLESS STEEL ENCLOSURE FOR GAS METER 374
SECTION PK-ESCR 690 – CONDUIT INTERIOR SEALING FITTING 375
SECTION PK-ESCR 701 – SAFETY SURFACING 377
SECTION PK-ESCR 703 – ADULT FITNESS EQUIPMENT 381
SECTION PK-ESCR 705 – SWINGS 7, 8, 10 FOOT HIGH 386
SECTION PK-ESCR 711 – CHAIN LINK FENCE 391
SECTION PK-ESCR 715 SC - ALLOWANCE FOR SECURITY CAMERA SYSTEM WORK AT EAST RIVER HOUSING PARKING LOT 397
SECTION PK-ESCR 717 – SHREDDED BARK MULCH 399
SECTION PK-ESCR 727 – PERMEABLE CONCRETE PAVER AND STONE BASE 400
SECTION PK-ESCR 730 – STEEL FLAGPOLE 404
SECTION PK-ESCR 736 – CORE DRILLING 409
SECTION PK-ESCR 737 – STEEL PIPE BOLLARD 410
SECTION PK-ESCR 739 – SEED NEW LAWN 413
SECTION PK-ESCR 740 – HYDROSEEDING 418
SECTION PK-ESCR 741 – PLANT STREET TREE 422
SECTION PK-ESCR 742 – RESILIENT SPORTS SURFACE – 13MM 428
SECTION PK-ESCR 743 – 6TH STREET TRACK AND FIELD 432
SECTION PK-ESCR 744 – BBQ GRILL 442
SECTION PK-ESCR 747 – ASPHALT FULL DEPTH – TENNIS COURTS 444
SECTION PK-ESCR 748 – FOUNDATION MATERIAL FOR CONCRETE (TRUCK MEASURE) 449
SECTION PK-ESCR 749 – FOUNDATION MATERIAL FOR ASPHALT (TRUCK MEASURE) 451
SECTION PK-ESCR 751 – STEEL PICNIC TABLE 453
SECTION PK-ESCR 753 – TOPSOIL FOR PLANTING PITS AND BEDS 455
SECTION PK-ESCR 764 – TREE AND PLANTING PROTECTION 460
SECTION PK-ESCR 781 – ITS SINGLE MODE, FIBER OPTIC CABLE, 12 STRAND 462
SECTION PK-ESCR 782 – ITS SINGLE MODE, FIBER OPTIC CABLE, 48 STRAND 462
SECTION PK-ESCR 783 – ITS SINGLE MODE, FIBER OPTIC CABLE, 48 STRAND, REDUCED OD, HIGH FLEXIBLE TYPE 462
SECTION PK-ESCR 784 – ITS SINGLE MODE, FIBER OPTIC CABLE, 216 STRAND 462
SECTION PK-ESCR 787 – ADJUST TOP OF UTILITY STRUCTURE TO GRADE 493
SECTION PK-ESCR 788 – ALLOWANCE FOR UTILITY COMPANY FEES 494
SECTION PK-ESCR 802 – STEEL FENCE WITH CLIMBING PROTECTION 495
SECTION PK-ESCR 805 – CUSTOM SITE FURNISHINGS 499
SECTION PK-ESCR 809 – SOD NEW LAWN, SPORTS FIELDS 502
SECTION PK-ESCR 811 – CONCRETE PAVERS ON CONCRETE BASE 506
SECTION PK-ESCR 907 – FISH CLEANING TABLE 511

SECTION PK-ESCR 912 – NATURE EXPLORATION FABRICATION 516
SECTION PK-ESCR 913 – NATURE EXPLORATION INSTALLATION 521
SECTION PK-ESCR 929 – REMOVE, SALVAGE, PROTECT AND REINSTALL – GOUVERNEUR GARDENS ARTIFACTS 525
SECTION PK-ESCR 930 – REMOVE, SALVAGE, STORE AND REINSTALL – PARK ARTIFACTS EAST RIVER PARK 530
SECTION PK-ESCR 937 – HORTICULTURAL SOILS SOURCING AND SUPPLY 535
SECTION PK-ESCR 943 – PARK SECURITY MEASURES 561
SECTION PK-ESCR 944 – COMPOST 565
SECTION PK-ESCR 945 – BIOCHAR 570
SECTION PK-ESCR 946 – GEOCOMPOSITE DRAINAGE BOARD 572
SECTION PK-ESCR 949 – SITE PROTECTION FOR GOUVERNEUR GARDENS 576
SECTION PK-ESCR 950 – SITE PROTECTION FOR PARK AREAS 578
SECTION PK-ESCR 951 – COMPOST TEA 580
SECTION PK-ESCR 961 – BIKEWAY SYMBOLS IMPRINTED INTO CONCRETE 585
SECTION PK-ESCR 966 – POROUS GRASS PAVER 586
SECTION PK-ESCR 968 – TREE SALVAGE 589
SECTION PK-10 – BROKEN STONE – LOOSE MEASURE 594
SECTION PK-77 – POLYETHYLENE CORRUGATED PIPE – 18” DIA. 595
SECTION PK-78 – POLYETHYLENE CORRUGATED PIPE – 24” DIA. 597
SECTION PK-667 – TEMPORARY SHEETING 599
SECTION PK-668 – PARKS LEAF MANHOLE COVER & FRAME 600
SECTION PK-669 – PARKS LEAF CATCH BASIN COVER & FRAME 601
SECTION PK-685 – DUCTILE IRON SEWER PIPE – 12” DIA. 602
SECTION PK-687 – DUCTILE IRON SEWER PIPE – 8” DIA. 603
SECTION PK-900 – HYDRODYNAMIC SEPARATOR 604

Note:

The Following “PK-ESCR” items and scopes of work are covered in Section 00 01 11 of the BUILDINGS-Pages and are not part of the PARKS-Pages scope of work:

Item No.	Item
PK-ESCR 049	M+O Pre Fabricated Building
PK-ESCR 051	M+O Fuel Storage Cabinet
PK-ESCR 50A	M+O Canopy Structure, Area 1
PK-ESCR 50B	M+O Canopy Structure, Area 2
PK-ESCR 501	Tennis Building
PK-ESCR 502	Track Building
PK-ESCR 503	10th Street Comfort Station
PK-ESCR 032	Steel Slat Double Swing Gate, 8’HT, 35’ W
PK-ESCR 200	Steel Slat Rolling Gate, 8’-0”HT, 25’ W
PK-ESCR 905	Steel Slat Double Swing Gate, 8’-0” HT, 15’-0”W
PK-ESCR 947	Steel Slat Privacy Fence M&O

SECTION ESCR-6.01 – CLEARING AND GRUBBING

6.01.1. INTENT. This section describes Clearing and Grubbing.

6.01.2. DESCRIPTION. Clearing and Grubbing shall include the removal and legal disposal of the following site elements as shown on the Contract Drawings, from within areas shown on the Contract Drawings and where directed by the Engineer:

- Asphalt, concrete, pre-cast concrete, cobbles and stone pavements (excluding pavement base courses to remain)
- Play area pavement and resilient surfacing
- Running track pavement and resilient surfacing
- Curbs and walls
- Piles and concrete pile caps for sports field lighting and amphitheater area structures
- Synthetic turf carpet, padding and associated subsurface drainage piping
- Concrete foundations for benches, light poles, play and exercise equipment, and other site furnishings
- Fences including fence curbing and foundations
- Park area surface drainage utilities including trench drains, slot drains, running track drains, drain inlets, catch basins, manholes, drainage piping (excluding the deep storm sewer and regulator system)
- Park area water service piping and associated structures. Park water features and elements such as drinking fountains, ground hydrants, quick couplers, misting posts, water play features, irrigation pumps, irrigation controls, irrigation heads, control wiring, piping, valves, valve boxes, etc.
- Park area electrical service including coordination with Con Ed, service switches, metering equipment, panels, lighting contactors, time clocks, light fixtures, switches, receptacles, junction/splice boxes, sport field floodlight poles, floodlight fixtures, walkway, light poles, floodlight poles, lighting control relay cabinets and poles, manholes, pull boxes, conduits and wiring
- Park area gas services piping, valves, and coordination with Con Ed.
- Project area communications services including manholes, pullboxes, conduit, wiring and coordination with Verizon.
- Trees and stumps less than six (6”) inches in diameter, branches, down timber, snags, brush and other vegetation.
- Debris including, tires, batteries, automobile parts, kitchen appliances, rubbish, stumps, roots and root systems, miscellaneous minor structures, and all other objectionable materials as noted on the Contract Drawings and where directed by the Engineer.

The Contractor must comply with all Federal, State, and City laws pursuant to the handling and disposal of woody organic material that is host material for the Asian Longhorned Beetle. All wood that is host material for the Asian Longhorned Beetle must be chipped, ground, or shredded inside the quarantine zone to a size of less than one (1’’) inch in at least two dimensions before it is

permitted to leave the quarantine zone. Please refer to the publication entitled Part 139 of the New York State Department of Agriculture and Markets law and contact State personnel for further details. Also see Section 1.06.23.(R), PLANT PEST CONTROL REQUIREMENTS, of the NYCDOT Standard Highway Specifications for additional requirements.

6.01.3. DISPOSAL OF SALVAGEABLE MATERIAL. Salvageable fence, including all appurtenances, or other salvageable materials shall be carefully dismantled, removed, cleaned and stored on the site for re-use in the work; delivered, after cleaning, to a designated City-owned Yard, within the five boroughs, or disposed of away from the site of the work, whichever the Engineer shall direct.

6.01.4. DISPOSAL OF NON-SALVAGEABLE MATERIAL. Non-salvageable materials shall be legally disposed of away from the site of the work. The disposal of materials resulting from Clearing and Grubbing operations by burning in open fires will not be permitted.

6.01.5. METHODS. Coordinate with the Engineer prior to the start of work to mark-out and confirm utilities to be demolished and utilities to remain and be protected within the project area. Confirm that utilities to be remove have been decommissioned and de-powered prior to the start of removal work.

Coordinate existing utility removals with the installation of temporary utilities required at existing buildings to remain. Obtain Engineer approval prior to the disconnection and removal of utility services to buildings to remain.

Carefully cut and protect existing utility service connections to remain including buried conduits and piping at existing buildings to allow for future reconnections. Maintain existing utility service connections extending five (5') feet beyond the foundations of existing buildings to remain.

When removing trees and stumps less than six (6") inches in diameter, trees and all stumps, roots and root systems shall be removed to a depth of three (3') feet below the existing ground surface. Roots and root systems beyond the stumps need not be removed, except as the Engineer shall deem necessary.

In areas where pavements are removed, aggregate subbase materials need not be removed except as the Engineer shall deem necessary. On-site processing of pavement materials for re-use is permissible as approved by the Engineer.

When removing pile supported foundations, remove concrete pile caps in their entirety and cut and remove piles three (3') feet below the bottom of pile foundations unless otherwise indicated on the Drawings or as directed by the Engineer. On-site processing of concrete pile cap structures is permissible as approved by the Engineer.

In areas where curbs, walls, piles and pile caps, drainage, electrical, water or gas utility elements are removed, the contractor shall backfill and compact holes trenches and other excavations to the level of the existing grade with clean fill or existing on-site fill materials from on-site as permitted by the Engineer.

(A) PRUNING

Branches of trees overhanging roadways, or other branches designated by the Engineer, shall be pruned to provide a clearance of fourteen (14') feet above the proposed final surface. Wound treatment shall not be used to cover wounds or pruning cuts, except when necessary for disease, insect, mistletoe, or sprout control, or for cosmetic reasons. Wound treatments that are damaging to tree tissue shall not be used. All trees within the City

Right of Way (canopy, roots, and/or trunk) require a pruning permit from the Department of Parks and Recreation and must be performed according to ANSI A300 Standards.

(B) ENGINEER'S APPROVAL

The Engineer, in consultation with NYCDPR, must approve all methods for felling, cutting or pruning trees for all trees which are under NYCDPR's jurisdiction.

(C) PROTECTION

Clearing and Grubbing operations shall be progressed in a manner and with equipment which will not damage trees, structures and adjoining grounds or vegetation which are to remain nor create any pedestrian or vehicular traffic hazards. In addition, all clearing and grubbing operations under the drip line of existing trees shall be performed by hand methods only. Tree protection fences shall not be moved or removed without the written permission of the Engineer.

(D) 7FENCING

Approved protective fencing or barricades shall be furnished and erected around or adjacent to individual trees, groups of trees and structures which are to remain, and at other required locations, when and as directed by the Engineer.

(E) CLEAN UP

All materials resulting from Clearing and Grubbing operations shall be disposed of, as specified, and the site shall be left in a condition satisfactory to the Engineer.

(F) REMOVAL OF FENCING

Protective fencing and barricades shall be removed and disposed of away from the site when directed by the Engineer.

6.01.6. MEASUREMENT.

(A) PER ACRE

Payment for Clearing and Grubbing will be made at the unit price bid per acre computed to the nearest tenth acre, for work satisfactorily completed.

6.01.7. PRICES TO COVER. The contract prices for Clearing and Grubbing shall include the cost of all labor, materials, equipment, insurance, and incidentals required to complete the work, together with all other work in connection therewith and incidental thereto, in full compliance with the Contract Drawings, the specifications and the directions of the Engineer. When there is no scheduled item provided therefor, the cost of the work required for Clearing and Grubbing shall be deemed included in the prices bid for all the scheduled contract items. The removal of trees and stumps over six (6") inches shall be paid for under separate items. The removal of existing buildings and building foundations shall be paid for under separate items. Temporary power to existing buildings to remain shall be paid for under separate items.

Unless otherwise provided for under other scheduled contract bid items, no separate payment will be made for tree pruning required herein to provide a clearance of fourteen (14') feet above the proposed final surface.

Payment will be made under:

Item	**No. Item**	**Pay Unit**

ESCR-6.01 AB CLEARING AND GRUBBING ACRE

END OF SECTION

SECTION PK-227B ADA – GRANITE BLOCK ON SAND – ACCESSIBLE

PK 227B.1. INTENT

This section describes the furnishing and installation of granite cobble over sand in accordance with the plans, specifications and directions of the Engineer.

PK 227B.2. DESCRIPTION

Under this section, the Contractor shall furnish and install granite cobble pavers in accordance with the details indicated on the Contract Drawings, specified, or directed by the Engineer.

PK 227B.3. MATERIALS

(A) GRANITE BLOCK— Blocks shall be of fine or medium grained granite showing an even distribution of constituent minerals. They shall be of uniform quality and texture throughout, and free from seams or disintegrated materials., except that no block shall be less than six (6”) inches long, four (4”) inches wide and five (5”) deep. Granite block may be rejected by the engineer for reuse in relaid wearing courses because of excessive roundness of other objectionable characteristics. All installed pavers shall have a flamed finish.

(B) SAND—Sand for sand setting bed and joint filler shall consist of clean, hard, durable uncoated particles free from lumps of clay and all deleterious substances and shall be so graded that when dry, one hundred percent shall pass a ¼” square opening sieve; not more than thirty-five percent (35%) by weight shall pass a No. 50 sieve. Cushion sand may be rejected if it contains more than ten percent (10%) by weight of loam and/or silt.

(C) MORTAR—The mortar shall be composed of one (1) part of Portland Cement and a maximum of two (2) parts sand, with not more than (5) percent of the cement content of hydrated lime or lime putty.

PK 227B.4. METHODS

Preparation of Subgrade: The Contractor shall trim and roll the subgrade to smooth, uniform lines to the satisfaction of the Engineer, prior to placing the pavement. The Contractor shall place geotextile over the prepared subgrade of structural soil, overlapping edges a minimum of six inches (6") to ensure complete coverage prior to placing the sand base.

Sand Cushion: The blocks shall be laid on a sand cushion of a maximum thickness of one inch (1"). The sand cushion shall be compacted by being rolled with a roller weighing one hundred fifty pounds (150 lbs.) per foot of width or by tamping, as directed by the Engineer.

Setting Blocks: The blocks shall be carefully laid on a sand cushion according to the patterns shown on the plans or as directed by the Engineer. Joints between blocks shall be a maximum of one inch (1") and a minimum of three-quarters inch (3/4") in width. All blocks shall be clean when placed in the pavement. Blocks which, in the opinion of the Engineer, are not satisfactorily clean shall be well washed before being placed. Cutting of blocks to meet pattern requirements will be permitted, subject to the approval of the Engineer.

After a sufficient area of block pavement has been laid, the surface shall be tested with a ten foot straight edge laid parallel with the center line and any depression exceeding one-quarter inch (1/4") shall be corrected and brought to the proper grade. All stones disturbed in making replacements or correcting depressions shall be settled into place by carefully ramming or

tamping to grade by the use of a hand tamper applied upon a two inch (2") board. Each section of pavement must be acceptable to the Engineer before the joints in that section are filled.

Filling Joints: Where sand joints are called for, the joints shall be filled with cushion sand. The sand shall be firmly packed in the joints between the blocks. Immediately after the joints are filled, the pavement shall be swept clean.

Where mortar joints are called for, the joints shall be completely filled with a cement grout mixture. The grout shall be firmly packed in the joints between blocks. Immediately after the joints are filled, the pavement shall be swept clean. The finished surface shall be free of all cement stain and excess grout and shall be acceptable to the Engineer.

Protection: All fresh mortar work shall be carefully protected from freezing and from drying effect of the sun and wind, and if required, it shall be sprinkled with water at such intervals and for such time as may be directed. Stonework shall be protected from injuries of all sorts, and all portions which may become damaged or may be found defective shall be repaired, or if directed, removed and rebuilt. No mortar work shall be laid or relaid when the temperature is below 40 degrees Fahrenheit.

PK 227B.5. MEASUREMENT

The quantity of granite blocks to be measured for payment shall be the number of square feet of granite blocks installed, in place, to the satisfaction of the Engineer.

PK 227B.6. PRICES TO COVER

The unit price bid per square foot of granite block over structural soils shall cover the cost of all labor, materials, plant, equipment, insurance, and necessary incidentals as required to furnish and install dimensioned granite pavers in accordance with the Contract Drawings, the specifications, and the directions of the Engineer.

Payment will be made under:

ITEM NO.	ITEM	PAY UNIT
PK-227B ADA	GRANITE BLOCK PAVEMENT ON SAND- ACCESSIBLE	SF

END OF SECTION

SECTION PK-ESCR 0-05 – TREE REMOVAL

WORK: The Contractor shall cut and remove within the contract limits, all trees over six (6") inches DBH, including the root to a depth of three (3') feet below the surface, where shown on the plans or as directed by the Engineer. The Contractor shall cut and remove within the contract limits, all trees over six (6") inches DBH, but the stump shall remain, where shown on the plans or as directed by the Engineer.

Note: DBH is defined as Diameter at Breast Height, which is 4'-6" above grade.

SPECIAL REQUIREMENTS FOR ASIAN LONGHORNED BEETLE QUARANTINE ZONE: For tree work to be performed within the quarantine zone, the Contractor shall utilize the service of a Contractor certified by the New York State Department of Agriculture and Markets. Due to current Federal, State and NYC DPR policy, any wood waste that is generated must be completely chipped within the Quarantine Zone, by said certified Contractor. Log splitting equipment, where necessary, shall be utilized at no extra cost to the City. For additional information regarding procedures, contact the Engineer. Also, see requirements listed under heading "Submittals".

METHOD: The Contractor shall carefully protect against damage to all existing trees, plants and other features to remain. The Contractor shall be liable for any damage to such trees, plants, park features and other property caused by Tree Removal operations and all damaged property shall be replaced or restored to its original condition, to the satisfaction of the Engineer.

The Contractor shall cut and remove all trees designated for removal within the limits of the contract or as directed by the Engineer. The stumps and roots of these trees shall be removed to a depth of three (3') feet below the ground surface. All voids and excavations left after removal of the tree and roots shall be backfilled to grade with clean fill. The fill shall be placed and compacted by acceptable methods to the satisfaction of the Engineer and shall meet the requirements of the NYCDOT Standard Highway Specifications. Chips generated by root removal operations shall be removed prior to backfilling.

For trees designated for removal with stump to remain, the stumps of these trees shall be cut flush to the ground surface.

Cutting of trees shall be done by competent workers only and in a professional manner. All trees shall be "topped" and "limbed" previous to felling unless otherwise directed by the Engineer. All branches, limbs, trunks, stumps, roots and other debris shall be removed from the site or otherwise disposed of to the satisfaction of the Engineer.

No trees are to be removed except as ordered by the Engineer.

SUBMITTALS: All submittals shall be as specified in the S-Pages. The Contractor shall submit the following for review and approval prior to performing work.

Qualifications In Quarantine Zone: State Certification- For all contracts within the Quarantine Zone, the Contractor must submit a copy of a valid Compliance Agreement issued by the State of New York Department of Agriculture and Markets, Division of Plant Industry.

MEASUREMENT AND PAYMENT: The quantity of **TREE REMOVAL** to be paid for under this Item shall be the number of tree units calculated in accordance with the payment schedule above, completely removed in accordance with the plans and specifications and directions of the Engineer.

The price bid shall be a unit price for **EACH** tree of the over 6" DBH, and shall include the cost of all labor, materials and equipment necessary for removing and disposing trees, including removal of root to 3' depth where required, borrowed fill, and all other incidental expenses necessary to

complete the work in accordance with the plans and specifications, to the satisfaction of the Engineer. The cost of State Certification and chipping wood waste shall be included in the bid price for all Contracts located within the Quarantine zone.

Item No.	Item	Pay Unit
PK-ESCR 0712	**TREE REMOVAL (6”-12” DBH)**	**EA**
PK-ESCR 1318	**TREE REMOVAL (12”-18” DBH)**	**EA**
PK-ESCR 1924	**TREE REMOVAL (18”-24” DBH)**	**EA**
PK-ESCR 2530	**TREE REMOVAL (24”-30” DBH)**	**EA**
PK-ESCR 3136	**TREE REMOVAL (30”-36” DBH)**	**EA**
PK-ESCR 3742	**TREE REMOVAL (36”-42” DBH)**	**EA**

END OF SECTION

SECTION PK-ESCR 028 – EXPOSED AGGREGATE CONCRETE PAVEMENT

PK-ESCR 028.1. INTENT.

This section describes construction of Concrete Sidewalk with Special Scoring and Exposed Aggregate Surface Treatment (Saw Cut Type Joints).

PK-ESCR 028.2. DESCRIPTION.

The work shall consist of the construction of Concrete Sidewalk with Special Scoring and Exposed Aggregate Surface Treatment (Saw Cut Type Joints).

(A) Concrete Sidewalk shall be of the width specified and shall be laid on a foundation as indicated on the drawings.

(B) Where specified on the Contract Drawings or directed by the Engineer, concrete sidewalk shall be reinforced with wire mesh.

PK-ESCR 028.3. MATERIALS.

The material requirements of Section ESCR-4.06, as currently amended, shall apply to all concrete sidewalk with special scoring and exposed aggregate surface treatment, along with the following modifications and additions:

(A) Exposed Aggregate for Surface Seeding and Pavement Finishing shall be as follows:

a. Material: Select, hard, and durable; washed; free of material that reacts with the cementitious material or causes staining; from a single source, with fine aggregate and gap graded coarse aggregate as follows:

b. Coarse Aggregate (for seeding): Provide angular stone 1/4” to 3/16” maximum in size. Aggregate shall be supplied by

i. Geo Schofield 831 Main Street Bridgewater NJ ph: 732.356.0858 f; 732.356.1197
ii. Pasvalco Company 108 Bogart Street Closter NJ ph:888.727.8252 f:201.768.5927
iii. KAFKA GRANITE, LLC | Mosinee, WI ph: 800.852.7415; kafkagranite.com
iv. Or approved equal.

c. Size, color, and percent of aggregate seeding mixture to be indicated on drawings:

d. Exposed Aggregate Grading: Fine aggregate shall be 25 to 35 percent of total exposed aggregate material as recommended by the Portland Cement Association.

(B) Expansion Joint Sealant: Joint sealant shall be a two (2) component, polyurethane based, self- leveling, chemically cured elastomeric sealant such as Sikaflex 429 primer with Sikaflex - 2C SL sealant as manufactured by Sika Corporation, Lyndhurst, NJ, or DynaTrol® II - SG, as manufactured by Pecora Corporation, Harleysville, PA, or approved equal. The color of the sealant shall match the color of adjacent pavements.

(C) Expansion Joint: The expansion joint material shall be one of the following:

a. A pre-molded bituminous fiber joint filler, as specified in General Requirements (requires a bond breaker and sealant) or,
b. A pre-molded closed cell expanded polyethylene foam joint filler, such as MasterSeal 920 by BASF Inc., (requires only sealant) or,

c. An approved equal of any of the above.

(D) Bond Breaker: If bituminous fiber material is used, a bond breaker such as one-half inch (1/2") width polyurethane tape or five-eighth inch (5/8") diameter expanded polyethylene foam backer rod shall be installed as recommended by the manufacturer. A bond breaker will not be required for a pre-molded foam joint or a shredded recycled rubber aggregate joint filler, but sealant is always required.

(E) Subbase Course Material: The material requirements of PK-ESCR 748, as currently amended, shall apply to all subbase course material for exposed aggregate concrete pavement.

PK-ESCR 028.4. METHODS.

All work required to install new concrete sidewalk with special scoring, saw cut type joints, and exposed aggregate surface treatment shall be done in accordance with the requirements of Section ESCR-4.06, for installing new concrete sidewalk with saw cut type joints, except with the following modifications and additions:

A. SAMPLES.

Prior to the start of construction the Contractor shall submit the following to the Engineer for approval prior to ordering of materials and sample panels:

1. Sample of aggregates.
2. Sample of sealant.
3. Intended design mix by percentages.
4. Sample of foundation material.
5. Mock ups:
    a. The Contractor shall prepare sample test panels at least 4 foot x 4 foot x 4 inch in size of the proposed typical concrete sidewalk with exposed aggregate and saw cut type joints for the approval of the Engineer. These test panels or other approved markups shall be used to assess techniques, surface finish, distribution of aggregates, and consistency of finish.
    b. As many test panels shall be constructed as are necessary to achieve a sample panel that meets the satisfaction of the Engineer. Once an approved sample panel has been achieved, all previous disapproved sample panels shall be immediately destroyed. The approved sample panel shall be clearly marked with the words “approved sample”. All new sidewalk work shall conform in appearance to the approved sample panel to the satisfaction of the Engineer. The approved sample panel shall remain on site until all sidewalk work is complete, after which the Contractor shall dispose of the sample panel unless the sample panel is a part of the finished work.

B. EXPOSED AGGREGATE SURFACE FINISH.

The minimum temperature required for pouring concrete sidewalk with exposed aggregate shall be 50 degrees F., unless otherwise directed by the Engineer.

The surface of the concrete sidewalk shall have an exposed aggregate finish. The exposed aggregate shall be seeded onto and then embedded into the surface of the concrete. Casting

aggregate over the surface of the concrete and embedding them in the surface of the concrete is referred to as “seeding”.

The Contractor is responsible for ordering sufficient concrete mix to fully complete each sidewalk slab section (expansion joint to expansion joint). Cold joints and/or interrupted pours will not be accepted.

Concrete shall be placed and screeded to the finished level, although depending on the size and quantity of aggregate to be added the initial surface level may need to be slightly lower than the finished level. Selected aggregate shall be hand-cast or seeded onto the surface immediately after screeding and then bullfloated into the surface prior to bleedwater appearing, or apply to the surface once all the bleedwater has evaporated and fully embedded by tamping and repeatedly working the surface with wood floats. The top surface of sidewalk shall be finished to a true smooth plane.

Surface retardant shall be applied in the amount and in a manner in accordance with the manufacturer’s instructions.

Each rectangular slab shall have all edges neatly rounded with proper tools. Concrete shrinkage control joints shall be evenly and crispy scored or saw cut at designate locations, but not tooled, at locations shown on the Contract Drawings. Unless otherwise shown on the Contract Drawings, the shrinkage control joints in the concrete surface shall be one-eight (1/8”) inch wide and three-quarter (3/4”) inch deep and if saw cut shall be done immediately after the concrete has reached its initial set which is typically anywhere from 4 to 8 hours after the concrete has been poured, depending upon the weather, but in no case shall it be later than 12 hours after pouring. All saw cuts are to be straight, clean and of consistent width.

C. PROTECTION AND CURING.

The Contractor shall carefully protect the concrete from the drying effects of the sun and wind, pedestrian and/or other traffic, or other caused, by means of suitable guards and coverings.

After aggregate has been exposed the concrete shall be cured by covering it with new and unwrinkled, non-staining, high-quality curing paper conforming to ASTM C171, Sheet Material for Curing Concrete.

To seal and protect the exposed aggregate surface after curing, the clear sealer shall be applied as per the manufacturer’s instructions.

All exposed aggregate surfaces shall be thoroughly inspected to verify and approve installation and safety, including wet and dry slip resistance, before opening the sealed surface to traffic.

D. EXPANSION JOINTS

Unless otherwise directed by the Engineer and excluding sign and parking meter posts, expansion joints shall be installed at all joints between the sidewalk slabs and curb, street hardware, wood poles, street light and traffic pole foundations, bollard foundations, hydrant foundation slabs, buildings, bridges, etc. Refer to contract drawings for location of expansion joints.

The top one (1”) inch shall be sealed with sealant poured on an approved backer rod in accordance with the manufacturer’s instructions.

PK-ESCR 028.5. MEASUREMENT.

The area of concrete sidewalk with special scoring and exposed aggregate surface treatment in **SQUARE FEET**.

In determining the area of Concrete Sidewalk to be paid for, the areas occupied by the tree wells, bases of columns, manhole heads, gate boxes and similar structures will be deducted from the

measured area of concrete sidewalk when they measure more than one (1) square foot and will not be deducted when they measure one (1) square foot or less.

PK-ESCR 028.6. PRICES TO COVER.

The contract price per **SQUARE FOOT** and depth as indicated for **CONCRETE SIDEWALK WITH SPECIAL SCORING AND EXPOSED AGGREGATE SURFACE TREATMENT** shall cover the cost of all labor, materials, equipment, insurance, and incidentals required to construct concrete sidewalk of the thickness specified, exposed aggregate surface treatment, with saw cut joints and sealant, complete in place with subbase course material, in accordance with Section ESCR-4.06, including, but not limited to, curing, excavation (other than rock excavation) and backfilling, all in accordance with the plans and specifications to the satisfaction of the Engineer.

Where Concrete Sidewalk with Exposed Aggregate is designated to be reinforced, the cost of furnishing and installing the welded wire fabric shall be paid for separately under its own contract Item No. ESCR-4.14 Epoxy-Coating Steel Reinforcement.

Payment will be made under:

Item No.	Item	Pay Unit
PK-ESCR 028 A	**5” CONCRETE SIDEWALK WITH SPECIAL SCORING AND EXPOSED AGGREGATE SURFACE TREATMENT (SAW CUT TYPE JOINTS)**	**S.F.**
PK-ESCR 028 B	**6” CONCRETE SIDEWALK WITH SPECIAL SCORING AND EXPOSED AGGREGATE SURFACE TREATMENT (SAW CUT TYPE JOINTS)**	**S.F.**

END OF SECTION

SECTION PK-ESCR 031 – GALVANIZED ESPLANADE SEA RAIL

PK-ESCR 031.1. INTENT

This section describes the furnishing and installation of esplanade sea railing in accordance with the plans, specifications and directions of the Engineer.

PK-ESCR 031.2. DESCRIPTION

This Section includes the following:

1. Galvanized Esplanade Sea Rail

PK-ESCR 031.3. MATERIALS

1.1 METALS

A. General: Provide metal free from pitting, seam marks, roller marks, stains, discolorations, and other imperfections where exposed to view on finished units.

B. Round Steel Pipe and posts: Standard weight, Schedule 40, hot dipped galvanized seamless steel pipe complying with ASTM F1083. Comply with ASTM F1043, material Design Group 1A, external and internal Coating Type A consisting of not less than 1.8 oz/sq. ft. zinc.

C. Steel Plates, Shapes and Bars: ASTM A 36/A 36M.

D. Brackets, Flanges, and Anchors: Cast or formed metal of same type of material and finish as railings and gates, unless otherwise indicated.

E. Steel Post Caps: Cast metal of same type of material and finish as railings and gates.

F. Rectangular Tube Steel: Cast metal of same type of material and finish as railings and gates

G. Miscellaneous Hardware: All miscellaneous hardware including, but not limited to allen set screws, bosses, tamper-proof screws, socket-head screws, flathead screws and clips shall be stainless steel, AISI Type 316.

H. Cast-in-Place Anchors in Concrete: Anchors of type indicated below, fabricated from corrosion-resistant materials capable of sustaining, without failure, the load imposed within a safety factor of 4, as determined by testing per ASTM E 488, conducted by a qualified independent testing agency.
   a. Threaded or wedge type; galvanized ferrous castings, either ASTM A 47 (ASTM A 47M) malleable iron or ASTM A 27/A 27M cast steel. Provide bolts, washers, and shims as needed, hot-dip galvanized per ASTM A 153/A 153M.

I. Welding Rods and Bare Electrodes: Select according to AWS specifications for metal alloy welded.

1.2 WELDING MATERIALS, FASTENERS, AND ANCHORS

A. Welding Electrodes and Filler Metal: Provide type and alloy of filler metal and electrodes as recommended by producer of metal to be welded and as required for color match, strength, and compatibility in fabricated items.

B. Fasteners for Anchoring Railings, Panels and Gates to Other Construction: Select fasteners of type, grade, and class required to produce connections suitable for anchoring

components to other types of construction indicated and capable of withstanding design loads.

C. Cast-in-Place and Post installed Anchors: Anchors of type indicated below, fabricated from corrosion-resistant materials with capability to sustain, without failure, a load equal to six times the load imposed when installed in unit masonry and equal to four times the load imposed when installed in concrete, as determined by testing per ASTM E 488 conducted by a qualified independent testing agency.

   a. Cast-in-place anchors.

   b. Expansion anchors.

1.3 GROUT AND ANCHORING CEMENT

A. Nonshrink, Nonmetallic Grout: Premixed, factory-packaged, nonstaining, noncorrosive, nongaseous grout complying with ASTM C 1107. Provide grout specifically recommended by manufacturer for exterior applications.

B. Erosion-Resistant Anchoring Cement: Factory-packaged, nonshrink, nonstaining, hydraulic-controlled expansion cement formulation for mixing with water at Project site to create pourable anchoring, Patching, and grouting compound. Provide formulation that is resistant to erosion from water exposure without needing protection by a sealer or waterproof coating and that is recommended by manufacturer for exterior use.

1.4 CHEMICAL EXPANSION ANCHORS

A. Chemical Anchoring Adhesive shall be a two-component 100% solids epoxy based system supplied in manufacturer's standard side-by-side cartridge and dispensed through a static-mixing nozzle supplied by the manufacturer. Epoxy shall meet the minimum requirements of ASTM C-881 specification for Type I, II, IV, and V, Grade 3, Class B and C and must develop a minimum 12,650 psi compressive yield strength after 7 day cure. Epoxy must have a heat deflection temperature of a minimum 136°F (58°C).

1.5 GROUNDING MATERIALS

A. Grounding Conductors: Bare, solid copper wire for No. 6 AWG and smaller; stranded copper wire for No. 4 AWG and larger.

B. Grounding Connectors and Grounding Rods: Comply with UL 467.

PK-ESCR 031.3.1. REFERENCES

A. Except as modified by governing codes and by the Contract Documents, comply with the applicable provisions and recommendations of the following:

   a. American Welding Society D1.1 “Structural Welding Code – Steel”.

   b. National Association of Architectural Metal Manufacturers “Metal Finishes Manual”.

   c. Industrial Fasteners Institute “Fastener Standards Book”.

   d. American Society for Testing and Materials (ASTM) – ASTM E 935-92: Test Method for Performance of Permanent Metal Railing Systems, ASTM E 985-87: Specifications for Permanent Metal Railing Systems, ASTM A53-96: Specification for Hot-Dipped Galvanized Seamless Pipe, ASTM A 123 Specification for Zinc (Hot-Dipped Galvanized); ASTM A 500-93 Specification for Cold Formed Welded and Seamless Carbon Steel Structural Tubing in Rounds and Shapes; ASTM E437

and Appendix X4.2 for wire mesh.

e. American Society of Civil Engineers (ASCE) – ASCE 8-90: Specification for Design of Cold – Formed Stainless Steel Structural Members.

PK-ESCR 031.3.2. SUBMITTALS

A. Product Data: For manufacturer's product lines assembled from standard components.

   a. Include Product Data for grout and anchoring cement.

   b. Include all metal types.

   c. Include all finish types

B. Material Certificates: For dimension lumber specified to comply with minimum allowable unit stresses. Indicate species and grade.

C. Field Measurements: Verify handrail and railing dimensions by field measurements before fabrication and indicate measurements on Shop Drawings. Field verify waterfront structures to accept all railing work and mountings. Coordinate fabrication schedule with construction progress to avoid delaying the Work.

   a. Established Dimensions: Where field measurements cannot be made without delaying the Work, advise Engineer in writing and establish dimensions and proceed with fabricating railings and gates without field measurements. Coordinate construction to ensure that actual dimensions correspond to established dimensions.

D. Shop Drawings: Show fabrication and installation of esplanade railing. Include plans, elevations, for entire length of each railing type for all field conditions and typicals for sections, details, attachments, connectors, anchoring and connecting hardware and lightening protection. Indicate field and shop welds. Detail custom corner conditions at non-90° angles, end panels, radiused sections, sloped sections, the corners at Fire Boat House, Houston Embayment, and the Amphitheater Embayment.The end post at ConEd and Embayment corners to have radiused panels.

E. Verification Calculations

   a. Shop drawings to be submitted along with the following calculations. Calculations need to be reviewed and approved by the Engineer.

      Verify that handrails are capable of withstanding the following structural loads without exceeding allowable design working stresses of materials for handrails, anchors, and connections:

      i. Top Rail: Capable of withstanding the following loads applied as indicated:
         1. Concentrated load of 200 lbf applied at any point and in any direction.
         2. Uniform load of 50 lbf/ft. applied horizontally and concurrently with uniform load of 100 lbf/ft. applied vertically downward.
         3. Concentrated and uniform loads above need not be assumed to act concurrently.

      ii. Rails Not Serving As Top Rails: Capable of withstanding the following loads applied as indicated:
         1. Uniform load of 50 lbf/ft. applied in any direction.

2. Concentrated and uniform loads above need not be assumed to act concurrently.

iii. Infill Area of Rail: Capable of withstanding a horizontal concentrated load of 200 lb/ft applied to 1 sq. ft. at any point in system, including panels, intermediate rails, or other elements composing infill area.
   1. Load above need not be assumed to act concurrently with loads on top rails in determining stress on guard.
   2. Concentrated load of 200 lbf applied at any point and in any direction.

F. Samples for Finish Verification: Short sections of structural, tubular, angle and plate samples for approval of mechanical finishes. Two (2) 12”x12” samples of all mesh types.

G. Mock-up: Assembled samples of each of the railing systems, made from full-size finished components, including mesh and all connecting hardware. Show method of finishing members at intersections. Each sample shall be full height, four feet long (minimum) and may be used in final installation if workmanship and finishes are accepted to Engineer. Mock-up must include the following locations and conditions:
   a. Corners,
   b. A left and right end panel,
   c. A radiused section,
   d. A sloped section,
   e. A sloped and radiused section,
   f. The corner at Fire Boat House,
   g. A Houston Embayment and an Amphitheater Embayment straight and radiused section, and
   h. The end panel at ConEd.

H. Qualification Data:

   a. Railing Manufacturer’s qualifications: The railing manufacturer must have successfully completed ten (10) years experience in the manufacture of railings similar in scope to the required work in a timely manner. This experience must include railings with castings. Submit lists of completed projects with project names and addresses, names of addresses of architects and owners, and other information specified.

   b. Powdercoater’s qualifications: Experience in successfully finishing powdercoating of steel fabrications similar in scope to the required work, with sufficient capacity to complete the work in a timely manner. Submit lists of completed projects with project names and addresses, names of addresses of architects and owners, and other information specified.

   c. Installer’s qualifications: the railing installer must have successfully completed (3) years experience in the installation of railings similar in scope to the required work in a timely manner. Submit lists of completed projects with project names and addresses, names of addresses of architects and owners, and other information specified.

   d. Welder Qualifications: Welders must be qualified per the appropriate AWS code for the process and procedures being used. All costs related to welder qualifications, including retests, are the Contractor’s responsibility.

I. Product Test Reports: From a qualified testing agency indicating products comply with

requirements, based on comprehensive testing of current products.

J. Product Test Reports: From a qualified testing agency indicating handrail, railing and gate components comply with ASTM E 985, based on comprehensive testing of current products.

PK-ESCR 031.3.3. QUALITY CONTROL

A. Thermal Movements: Provide handrails that allow for thermal movements resulting from the following maximum change (range) in ambient and surface temperatures by preventing buckling, opening of joints, overstressing of components, failure of connections, and other detrimental effects. Base calculation on surface temperatures of materials due to both solar heat gain and nighttime-sky heat loss.

   a. Temperature (Range): 120 deg F, ambient; 180 deg F, material surfaces.

B. Control of Corrosion: Prevent galvanic action and other forms of corrosion by insulating metals and other materials from direct contact with incompatible materials.

C. Qualify welding processes and welders in accordance with AWS D1.1 “Structural Welding Code – Steel,” D1.3 “Structural Welding Code – Sheet Steel”, and D1.2 “Structural Welding Code – Aluminum”.

PK-ESCR 031.3.4. DELIVERY, STORAGE, AND HANDLING

A. Schedule installation of handrail, railings and gate to coordinate with varying setting, anchoring and lightening protection requirements. Do not support temporarily by any means that do not satisfy structural performance requirements.

B. Schedule installation of railings to coordinate with varying setting, anchoring and lightening protection requirements. Do not support temporarily by any means that do not satisfy structural performance requirements.

PK-ESCR 031.3.5. MANUFACTURER

Fabricator and powder coater to be submitted for approval by the Engineer.

PK-ESCR 031.3.6. FINISHES

A. Comply with NAAMM’s “Metal Finishes Manual for Architectural and Metal Products” for recommendations for applying and designating finishes.

B. Galvanizing: All components of the esplanade rail including the posts, and rails shall be hot dipped galvanized in accordance with the provisions of the NYSDOT Standard Specifications. All galvanized surfaces will be given thermo-setting polyester powder finish for extra protection and added aesthetic appeal. The coating shall be lead free and without solvents. The final color shall be black matte as approved by the Engineer, unless otherwise shown on the Contract Drawings.

C. The Powder coating process shall consist of the following steps unless directed otherwise by the Engineer:
   1. The material shall be alkaline cleaned and then rinsed.
   2. The material shall be pickled in a bath with inhibited phosphoric acid and then rinsed.
   3. An active anti-corrosive layer of zinc phosphate shall be applied and rinsed.

4. The layer of zinc phosphate shall be sealed with a hexavalent chromating agent of very low weight and then the material shall be rinsed.
5. The material shall be rinsed with e-ionized water to remove any remaining salts which can cause osmosis.
6. The material shall be dried in the drying oven.
7. The powder shall be charged to 80,000 volts and then sprayed onto the grounded steel.
8. The material shall be heated to a temperature between 340-390 degrees F, in accordance with the powder manufacturer's specifications, to melt the resin cores and to

D. Fill vent and drain holes that will be exposed in finished Work, unless indicated to remain as weep holes, by plugging with zinc solder and filing off smooth.

E. Protect mechanical finishes on exposed surfaces from damage by applying a strippable, temporary protective covering before shipping.

F. Appearance of Finished Work: Variations in appearance of abutting or adjacent pieces are acceptable if they are within one-half of the range of approved Samples. Noticeable variations in the same piece are not acceptable. Variations in appearance of other components are acceptable if they are within the range of approved Samples and are assembled or installed to minimize contrast.

PK-ESCR 031.4. FABRICATION

A. General: Fabricate handrails, railings and gates to comply with requirements indicated for design, dimensions, member sizes and spacing, details, finish, and anchorage.

B. Assemble railings and gates in the shop to greatest extent possible to minimize field splicing, welding and assembly. Disassemble units only as necessary for shipping and handling limitations. Clearly mark units for reassembly and coordinated installation. Use connections that maintain structural value of joined pieces.

C. Welded Connections: Where shown on details and approved shop drawings, fabricate railings and gates for connecting members by welding. Cope components at perpendicular and skew connections to provide close fit, or use fittings designed for this purpose. Weld connections continuously to comply with the following.
   1. Use materials and methods that minimize distortion and develop strength and corrosion resistance of base metals.
   2. Obtain fusion without undercut or overlap.
   3. Remove flux immediately.
   4. At exposed connections, finish exposed surfaces smooth and blended so no roughness shows after finishing and welded surface matches contours of adjoining surfaces.

D. Nonwelded Connections: Where shown on details and approved shop drawings, fabricate railings and gates by connecting members with concealed mechanical fasteners and fittings, unless otherwise indicated. Fabricate members and fittings to produce flush, smooth, rigid, hairline joints.

E. Brackets, Flanges, Fittings, and Anchors: Provide wall brackets, flanges, miscellaneous fittings, and anchors to interconnect handrail, railing and gate members to other work, unless otherwise indicated.

F. Provide inserts and other anchorage devices for connecting railings and gates to concrete.

Fabricate anchorage devices capable of withstanding loads imposed by movement at gates and due to other factors. Coordinate anchorage devices with supporting structure and lightening protection.

G. Shear and punch metals cleanly and accurately. Remove burrs from exposed cut edges.

H. Ease exposed edges to a radius of approximately 1/32 inch (1 mm), unless otherwise indicated. Form bent-metal corners to smallest radius possible without causing grain separation or otherwise impairing the Work.

I. Cut, reinforce, drill, and tap components, as indicated, to receive finish hardware, screws, and similar items.

J. Provide weep holes or another means to drain entrapped water in hollow sections of railings and gates that are exposed to exterior or to moisture from condensation or other sources.

K. Fabricate joints that will be exposed to weather in a watertight manner.

L. Close exposed ends of railings and gates with prefabricated end fittings.

1.1 INSTALLATION, GENERAL

A. Fit exposed connections together to form tight, hairline joints.

B. Perform cutting, drilling, and fitting required to install railings and gates. Set railings and gates accurately in location, alignment, and elevation; measured from established lines and levels and free from rack.

1. Do not weld, cut, or abrade surfaces of handrail, railings and gates components that have been finished after fabrication and that are intended for field connection by mechanical or other means without further cutting or fitting.
2. Set posts plumb within a tolerance of 1/16 inch in 3 feet (2 mm in 1 m).
3. Align railings and gates so variations from level for horizontal members and from parallel with rake of steps and ramps for sloping members do not exceed ¼ inch in 12 feet (5 mm in 3 m).

C. Adjust railings and gates before anchoring to ensure matching alignment at abutting joints. Space posts at interval indicated, but not less than that required by structural loads.

D. Fastening to In-Place Construction: Use anchorage devices and fasteners where necessary for securing railings and gates and for properly transferring loads to in-place construction.

1.2 RAILING CONNECTIONS

A. Nonwelded Connections: Use mechanical joints for permanently connecting railing components. Use wood blocks and padding to prevent damage to railing members and fittings. Seal recessed holes of exposed locking screws using plastic cement filler colored to match finish of railings and gates.

B. Welded Connections: Use fully welded joints for permanently connecting components. Comply with requirements for welded connections in “Fabrication” subsection whether welding is performed in the shop or in the field.

C. Tack-weld all exposed non-tamperproof nuts.

D. Expansion Joints: Install expansion joints not farther apart than required to accommodate thermal movement. Provide slip-joint internal sleeve extending 2 inches (50 mm) beyond joint on either side, fasten internal sleeve securely to one side, and locate joint within 6

inches (150 mm) of post.

1.3 ANCHORING POSTS

A. Grounded Posts

1. All posts shall have provided a grounded connection to reinforcing bars at intervals not to exceed 150 feet.

B. Non-Grounded Posts

1. Fasten posts or anchor posts to surfaces as shown on drawings.

C. Posts and Railing Ends.

1. Form or core-drill holes ¾ inch (20 mm) larger than OD of post for installing posts in concrete. Clean holes of loose material, insert posts, and fill annular space between post and concrete with the following anchoring material, missed and placed to comply with anchoring material manufacturer's written instructions:
    a. Nonshrink, nonmetallic grout.
2. Cover anchorage joint with flange of same metal as post, attached to post as follows:
    a. Welded to post after placing anchoring material.

PK-ESCR 031.5. MEASUREMENT

A. GALVANIZED ESPLANADE SEA RAIL: The quantity of Galvanized Esplanade Sea Rail to be paid for shall be the number of linear feet of each type rail furnished and erected complete, to the satisfaction of the Engineer. Measurement shall be made in place along the centerline of the top rail, from center to center of end posts.

PK-ESCR 031.6. PRICES TO COVER

A. GALVANIZED ESPLANADE SEA RAIL: The price bid shall be a unit price per linear foot of Galvanized Esplanade Sea Rail and shall include the cost of all labor, material, equipment, and incidentals required to furnish and erect rail of the type specified including, but not limited to, shop drawings, gates, excavation, concrete post footings, backfill, and painting as required, all in accordance with the Contract Drawings, the specifications and the directions of the Engineer.

Payment will be made under:

Item No.	Item	Pay Unit
PK-ESCR 031	**Galvanized Esplanade Sea Rail**	**L.F.**

END OF SECTION

SECTION PK-ESCR 032 – STEEL BLEACHERS

WORK: Under this item, the Contractor shall furnish all labor, materials, equipment, and incidentals necessary to assemble and install **STEEL BLEACHERS** anchored on reinforced concrete slabs to the lengths and sizes shown on the drawings in accordance with the plans and specifications and directions of the Engineer.

Non-elevated bleachers four (4) tiers or higher shall be installed with a non-climbable barrier (minimum 42" high) attached at both sides and rear. Elevated bleachers, such as those used for roller hockey events shall have an additional handrail installed in front of the walkway platform including stairs and entrances. Where an opening between the seatboard and footboard is located more than thirty (30) inches above the finished grade, the opening shall be closed by a kickboard such that a four (4") inch diameter sphere cannot pass through. Aisles are not required for bleachers that have five tiers or less.

CRITERIA: Bleacher design and construction must meet the all applicable requirements from the American with Disabilities (ADA) Standards for Accessible Design and NYC Building Code.

ADA STANDARDS FOR ACCESSIBLE DESIGN: In accordance with 28 CFR Part 36 (ADA Standards for Accessible Design), in places of assembly with fixed seating accessible wheel chair location shall comply with Section 221 Assembly Areas and shall be provided consistent with Table 221.2.1.1 – "Number of Wheelchair Spaces in Assembly Areas" as shown below:

Number of Seats	Minimum Number of Required Wheelchair Spaces
4 to 25	1
26 to 50	2
51 to 150	4
151 to 300	5
301 to 500	6
501 to 5000	6, plus 1 for each 150, or fraction thereof, between 501 through 5000
5001 and over	36, plus 1 for each 200, or fraction thereof, over 5000

BUILDING CODE: New York City Building Code Chapter 10 – "Means of Egress", Chapter 11 – "Accessibility", and Chapter 16 - "Structural Design" shall apply to bleacher assembly and other portions of the code may apply as well. Bleacher assembly shall also be in accordance with ICC Standard 300 – "Standard on Bleachers, Folding and Telescopic Seating and Grandstands". The following excerpts from the NYC Building Code and ICC Standard 300 shall apply:

a) Design Loads: Bleachers, folding and telescopic seating, and grandstands shall be designed for a uniform live load of 100 pounds per square foot (psf) (4788 Pa). All seat and footboard members shall be designed to support a live load of at least 120 pounds per linear foot.

   Stair Treads and aisle stair treads shall be designed to resist a minimum concentrated load of 300 pounds on an area of 4 square inches.

   Handrail assemblies and guards shall be designed to resist a load of 50 pounds per linear foot and a single concentrated load of 200 pounds applied in any direction at the top.

Intermediate rails (all those expect the handrail), balusters, and panel fillers (including flexible infill components) shall be designed to withstand a horizontally applied normal load of 50 pounds on an area equal to 1 square foot, including openings and space between the rails.

b) Individual seat space width shall be 18". The space between the back edge of a seat board and the front edge of the seat board behind it shall be a minimum distance of 14 ½".

c) The width of seat and foot boards shall be minimum 9 ½".

d) Bleachers having 16 or more tiers require aisles at ends of seat rows, the minimum spacing between seat rows shall be increased to 16" and the required space between rows shall be increased by 1/4" for each seat in excess of seven that it is necessary to pass to reach an aisle. Cross aisles shall be provided at the bottom of each section.

   Aisles are not required for bleachers that have more than five (5) tiers where all of the following conditions exist:

   1. Seats are without backrests.
   2. The rise from row to row does not exceed 6 inches (152 mm) per row.
   3. The row spacing does not exceed 28 inches (711 mm) unless the seatboards and footboards are at the same elevation.
   4. The number of rows does not exceed 16 rows in height.
   5. The first seating board is not more than 12 inches (305 mm) above ground or floor below or a cross aisle.
   6. Seatboards have a continuous flat surface.
   7. Seatboards provide a walking surface with a minimum width of 11 inches (279 mm).
   8. Egress from seating is not restricted by rails, guards or other obstructions.

MANUFACTURER: Steel Bleachers shall be manufactured by:

- Custom Fabrication Inc,.2903 NY Route 7, PO Box 43 Harpursville, NY 13787, PH 800-922-0070;
- Seating Solutions, 60 Austin Blvd., Commack, NY 11725, Phone: 888-959-7328;
- MRC, 2130 Route 35, Building B, Suite 222, Sea Girt, NJ 08750, Phone: 800-922-0070
- or approved equal.

MATERIALS: Unless otherwise specified all materials shall meet the requirements of the NYCDOT Standard Highway Specifications and shall meet the following minimum:

Steel: All structural steel shall conform to ASTM A36 – latest revision and American Institute of Steel Construction for buildings as revised and amended to date.

Under Structure: The under structure of each unit shall consist of a series of frames or stringers spaced at intervals and joined by means of cross braces. Each stringer shall consist of vertical members, adequate diagonal braces, and horizontal members for bearing on a level surface supporting seat and foot planks. Frame to frame crossbracing shall be secured at each end of frame and at midpoint with machine bolts.

Frame members are formed and welded from steel tubing, 1 ½” x 1 ½” x 3/16". Supporting brackets made of 3/16" plate steel shall be welded to frame where planks are to be attached. Crossbracing shall be formed from 1 ½ " x ¼ " flat steel bar.

All welds shall be 3/16" continuous fillet welds wherever separate pieces are joined. Frame members shall be spaced a maximum of six (6') feet on inside bays and five (5') feet on outside bays. The required number of angle supports and support braces shall be securely attached to frame members to support the entire understructure rigidly and securely support under all calculated live and dead loads.

Predrill anchor holes in frame bottom at 32" on center.

Seatboards: Seatboards shall be 12 gauge or better plate steel. Seatboards shall be formed into a structural “C” shape, between 10" and 12" wide, with end caps permanently welded in place. Seatboards shall be galvanized and powdercoated as specified below. Color of seats shall be white unless otherwise noted on the drawings.

Kickboards: Kickboards, if required, shall be 12 gauge or better plate steel, hot-dipped galvanized. Footboards shall NOT be powder coated unless directed by the Engineer in writing.

Footboard: Footboards shall be fabricated from 12-gauge hot-dip galvanized plate steel with perforated or dimpled or other approved slip resistant surface. Footboards shall NOT be powder coated unless directed by the Engineer in writing.

Footboard shall be formed into a structural “C” shape, minimum 10" wide with welded endcaps. Double footboards shall be connected on each row.

Railing: Bleachers with four (4) or more tiers shall have safety railing on both sides and back. Railing shall be either steel panel fencing with vertical railing or, welded wire modular panels, or other approved non-climbable railings

Line rails of adequate size, location, and height shall be installed to New York State code requirements and carry required design loads and shall be furnished for back, ends, and front of the bleachers including all exits.

Tubular Steel Posts: Tubular steel shall be structural tubing of the sizes and shapes shown in the approved shop drawings. Steel shall meet the specifications for ASTM A500, Grade B which has a minimum tensile strength of 58,000 psi (for round and shaped) and a minimum yield point of 42,000 psi for round structural tubing and a minimum yield point of 46,000 psi for shaped structural tubing. Material shall be load-tested under ASTM 1487Latest Rev., after fabrication.

Railing Panels: Fence panels shall consist of vertical rail that provide enclosure and shall have no gaps greater than 3.5" and less than 9". Tubing used for railing shall have an O.D. between 0.75” to 1.6” and shall meet the same strength requirement as the posts. Railing shall be hot-dipped galvanized as specified below. All welds shall be complete and ground smooth.

Anchors: Bleacher framework shall be secured to the reinforced concrete slab using 3/8" x 2 3/4" Red Head or Hilti sleeve anchors. Anchors shall be installed 18" on center through frame bottom.

Hardware: Bolts shall be 3/8" – 16 threads per inch, grade 2 zinc-plated steel. Bolts shall have sufficient length to extend a minimum of ¼” beyond the face of the nut after tightening.

Spring lock washers are 3/8” dia. Galvanized or stainless steel. Nuts are tamper-resistant 3/8" - 16 deformed-thread lock nuts.

FABRICATION: All fabrication of the bleacher shall, as far as practicable, be completed in the shop. All work shall be plumb and true and in conformity with the details shown on the contract drawings and in accordance with current safety and accessibility standards. All angles, channels,

and plates shall be accurately cut for a close fit at all intersections.

Welding: All welds shall be ground smooth, without impairing their strength and shall be done in shop by certified welders conforming to AWS standards as specified under Section “B” and all welds shall be ground smooth. No welding shall be performed on site.

Corrosion Resistant Treatment: All bleacher components, except for the seatboards, shall be hotdipped galvanized. Seatboards shall be receive corrosion resistance treatment and be powdercoated as specified below. All fabrication and welding shall be completed prior to application of the corrosion resistant coating. Metal pieces shall be cleaned of all weld spatter, mill scale, varnish, rust, grease, and the like and the surface mechanically or chemically prepared to receive the coating. All metal parts of the bleacher, except the seatboards, shall be hot-dipped galvanized in accordance with ASTM A-123 specifications after fabrication and shall conform to the American Institute of Steel construction for building as amended to date.

For seatboards, and other metal components to receive powdercoating, the corrosion resistant coating shall be either a thermal spray zinc coating with a minimum thickness of 3 mils, or a multistep iron phosphate bath coating process.

Polyester Powder Coating: Only seatboards shall be powdercoated unless otherwise directed by the Engineer in writing. A surface coat shall be applied to the thermal zinc or iron phosphate coated metal pieces in such a manner that the coating will not peel off. The manufacturer shall perform all processes required to achieve a smooth material bond. The surface coat shall be an electrostatically sprayed, lead-free, TGIC (triglycidyl isocynanurate) polyester powder coating applied to a minimum of 5 mil thickness which shall be oven cured at temperatures between 400 and 450 degrees Fahrenheit for a period of 20 minutes. The TGIC polyester powder coating shall be similar to Secural by Spraylat, Tiger Drylac Series 49 as manufactured by Tiger Drylac U.S.A., Reading, PA, Clear Polyester TGIC ENVIROCRON Powder Coat, as manufactured by PPG Industries, College Station, TX, or approved equal and shall comply with ASTM standards as follows:

PHYSICAL PROPERTIES	TEST METHODS	ACCEPTANCE CRITERIA
Adhesion cross hatching	D-3359B	5B (0% area removed)
Flexibility conical mandrel	D-522	Pass 3/8” mandrel
Pencil hardness	D-3363	Pencil hardness 2H minimum
Impact resistance	D-2794	140 inch pounds minimum
Overbake resistance- Adhesion	D-2454	5B
Overbake resistance- Hardness	D-2454	Pencil hardness 2H minimum
Overbake resistance- Direct Impact	D-2454	140 inch pounds minimum
Humidity resistance-250 hours	D-4585	No visible change to surface
Weatherability	D-822	No visible change to surface

Colors shall be “white” unless otherwise shown on the drawings. Material surfaces shall be protected during shipment so as to arrive mar and scratch free in the field.

ERECTION: Bleachers shall be assembled and erected in accordance with the Manufacturer’s instructions and the approved shop drawings.

The Manufacturer’s Representative shall be present at the site and provide technical support during the initial phase of assembly. It is highly recommended that a subcontractor certified by the Manufacturer be hired to perform this work. All work shall be done by skilled mechanics in a

professional manner.

As parts are assembled, do not tighten hardware until all components are installed, aligned and bleachers are plumbed and leveled. The bleacher shall be assembled with bolts of the proper length, washers and deformed-thread locknuts with the approval of the Engineer. After bleacher is fully assembled, the hex nuts shall be fully tightened to their design torque. The threads of bolts shall be distressed or prick punched after tightening to prevent removal.

Anchor holes of proper size shall be drilled into concrete slab at eighteen (18") inch intervals and frame secured with sleeve anchors.

SUBMITTALS: All submittals shall be in accordance with the requirements of the S-Pages.

Shop Drawings: Shop drawings and erection drawings for bleacher units shall be submitted for approval prior to fabrication. Design calculations for all structural components are required from the Manufacturer. Structural calculations and shop drawings for all bleachers shall be included in submittals.

Shop drawings shall also include hardware schedule, anchors, dimensions and thickness of steel together with drawings showing sizes and details of all members and connection details.

Document of Acceptance: An authorized representative of the Bleacher Manufacturer must inspect and approve the completed installation. The bleacher will not be accepted by the Bleacher Manufacturer or the Engineer until they are satisfied with the installation. No additional compensation will be given for any necessary corrective work. A document of acceptance signed by the authorized Manufacturer's representative must be submitted to the Engineer.

Insurance Certificate: The Contractor shall furnish the Manufacturer's Certificate of Product Liability Insurance for a minimum of one (1) million dollars.

Guarantee: The Contractor shall furnish the original and 4 (four) copies of the Manufacturers' Guarantee. The manufacturer shall guarantee replacement of any items or components found to be defective during the manufacturer's standard guarantee period. The Engineer shall submit the original guarantee certificate to the Engineer at the completion of the project.

MEASUREMENT AND PAYMENT: For all **STEEL BLEACHERS** furnished and installed under this item complete in accordance with the plans, specifications and directions of the Engineer, the Contractor shall receive the **EACH** price bid.

The price bid shall be a **EACH** for **STEEL BLEACHERS** of the sizes indicated on the plans and shall include the cost of all work, labor and materials including seat boards, foot boards, kickboards and railings, when required, anchors, hardware, galvanizing, powder coating, delivery, services of a manufacturer's representative and all other incidental expenses necessary to complete the work in accordance with the plans and specifications, to the satisfaction of the Engineer.

Reinforced concrete slab and excavation shall be paid for separately under their respective contract items.

Item No.	Item	Pay Unit
PK-ESCR 032 A	STEEL BLEACHERS TYPE 1	EA
PK-ESCR 032 B	STEEL BLEACHERS TYPE 2	EA

END OF SECTION

SECTION PK-ESCR 033 – BOULDERS

PK-ESCR 033.1. INTENT

Under this Item, the Contractor shall furnish and install LANDSCAPE BOULDERS in accordance with the plans, specifications, and directions of the Engineer.

PK-ESCR 033.2. DESCRIPTION

a. This Section includes landscape boulders, stone, and stone veneer.

PK-ESCR 033.3. MATERIALS

Characteristics and Quality:

1. All stone shall be carefully selected from sound stock and shall be free from defects impairing strength, durability, or function, such as cracks, holes, flaws or imperfections which have been patched or filled.
2. Unless otherwise approved or directed by the Engineer, provide matched boulders/blocks from a single quarry / supplier. Landscape boulders shall be from a single location within the quarry especially reserved for Project, unless stones from randomly selected blocks are acceptable to the Engineer for aesthetic effect.
3. Stone Surface Finish: Natural weathered or split face finish with drill or tool marks on no more than one side of boulder.
4. Stone shall be uniformly consistent in color, value, graining texture, and other features to the extent inherent in each stone type.
    a. Color and value variations shall be within ranges established by approved samples.
    b. Graining and texture variations, whether highly figured or uniform, shall be consistent in all material supplied.

Stone Types:

1. Stone types shall be listed as below. Stone types, sizes indicated by the Stone Schedule in Contract Documents matching grain, and colors of representative stones and boulders as selected by Engineer at stone material source. See drawings for finishes and dowel sizing, spacing, and location.
    a. Stone Type 2: Sawn cut on bottom, top, and adjoining sides. Thermal finish on sawn cut top face. Natural cleft finish on all exposed vertical faces. 1” chamfer on all exposed horizontal edges. No sharp corners or edges.
    b. Stone Type 3: No saw cuts. Natural finish on all faces. Roughly rectangular with parallel tops and bottoms, with some variation in shape. No sharp corners or edges.
    c. Stone Type 4: Rounded irregular shape. Soft forms with no distinct corners or edges.

Stone Veneer:

STONE VENEER ANCHORING SYSTEM

1. Type 304 Stainless Steel “L”, ‘Z” and “Split-Tail” Anchors 1-1/4”x1/4”
2. Fastener Materials: Unless otherwise indicated, provide the following:
    a. Stainless-Steel Components: Type 304 stainless-steel fasteners.
    b. Dissimilar Metals: Type 304 stainless-steel fasteners.
    c. Anchors, General: Anchors capable of sustaining, without failure, a load equal to six times the load imposed when installed in unit masonry and four times the load imposed when installed in concrete, as determined by testing according to ASTM E 488, conducted by a qualified independent testing agency.

<u>Stone Miscellaneous Materials:</u>

3. Aggregate Base Course
    a. Unless otherwise herein specified, all materials and methods of construction shall comply with the requirements of the NYCDOT Standard Highway Specifications.
    b. Material for Foundation shall be a straight run of single size aggregate and shall consist of either all one and one-half (1 1/2”) inch stone or all three-quarter (3/4”) inch stone in accordance with ASTM C33, free from organic or other deleterious material. In addition, Foundation Material may contain no more than five (5%) percent of fines, defined as aggregates passing a No.4 sieve or smaller.
    c. The Magnesium Sulfate Soundness loss after ten (10) cycles shall be eighteen (18%) percent or less, as per ASTM C88. Coarse aggregate may be one of the following:
        i. Broken Stone or gravel of approved quality and conforming to the requirements of the NYCDOT Standard Highway Specifications
        ii. Recycled Material consisting of at least ninety five (95%) percent by weight of the following:
            1. Recycled Portland Cement Concrete Aggregate or
            2. Recycled Portland Cement Concrete Aggregate mixed with Stone Gravel.
4. Geotextile for aggregate base course
    a. Fibers used in the manufacture of geotextiles, and the threads used in joining geotextiles by sewing, shall consist of long-chain, synthetic polymers, composed of at least 95 percent by weight polyolefins, polyesters, or polyamides. The geotextile and the threads used in sewing geotextiles, shall be resistant to chemical attack, rot, and mildew. The geotextile shall have no tears or defects which adversely alter its physical properties. They shall be formed into a stable network such that the filaments or yarns retain their dimensional stability relative to each other, including selvages. The geotextile shall have no tears or defects which adversely alter its physical properties.
    b. Separation application is defined as the placement of a flexible porous geotextile between dissimilar materials so that the integrity and functioning of both materials can be maintained or improved, but where water seepage through used in separation applications shall conform to the following AASHTO-M-288 properties for separation geotextiles:

ASTM Test			
Structure		Woven	Non-Woven
Elongation	D4632	< 50%	≥ 50%
Grab Strength (Minimum)	D4632	1100 N (247 LBF)	700 N (157 LBF)
Tear Strength (Minimum)	D4533	400 N (90 LBF)	250N (56 LBF)
CBR Puncture (Minimum)	D4833	4000 N (900 LBF)	1820 N (410 LBF)
Permitivity (Minimum)	D4491	0.02 / sec.	0.02 / sec.
Apparent Opening Size (Maximum)	D4751	0.6 mm (0.023 inch) Std. No. 30 sieve	0.6 mm (0.023 inch) Std. No. 30 sieve

c. Geotextile used in separation applications shall be FX-66 (woven) or FX-60HS (nonwoven) manufactured by Carthage Mills, Cincinnati, OH, or 600X (woven) or 160N (nonwoven) as manufactured by Mirafi, Inc., Pendergrass, GA, or TerraTex HD (woven) or TerraTex N06 (nonwoven) as manufactured by Hanes Geo Components, Winston Salem, NC or approved equal.

5. Chinking Stone Gap Filler: Provide angular fractured boulder fragments as required for filling gaps between boulders in place. Fragments shall be of same stone type and source as adjacent Stone Type.

6. Stone Fines System:
   a. Stone Fines: Provide stone fines blended with aggregate binder. Stone fines material and mixes with approved color range shall be as selected and approved by Engineer using Field Sample/Mock-ups for stone fines paving material selection.
      i. Gradation: Provide stone with fines, matching approved office samples and final Field Sample/Mock-up for Stone Screenings Installation, and of the following gradation:

Screen Size	Percentage Passing by Weight
3/8”	100
No. 4	95 to 100
No. 8	75 to 80
No. 16	55 to 65
No. 30	40 to 50
No. 50	25 to 35
No. 100	20 to 25
No. 200	5 to 15

1. Particles shall be clean, hard, durable fragments of ¼ inch minus select crushed stone. Fines shall be evenly mixed throughout the aggregate. When produced from gravel, 50 percent, by weight, of the material retained on a No. 4 sieve shall have one fractured face.
2. The portion retained on the No. 4 sieve shall have a maximum percentage of wear of 50 at 500 revolutions as determined by AASHTO T96-77.
3. The portion passing a No. 40 sieve shall have a maximum liquid limit of 25 and a maximum plasticity index of 7, as determined by AASHTO T89-81 and AASHTO T90-81, respectively.

ii. Available Stone Screenings Suppliers: Subject to compliance with requirements, suppliers offering products that may be incorporated into the Work include, but are not limited to, the following:

1. Blue Gray Bluestone Screening, 1/8" minus, by H. Bittle & Sons (516/924-7500).
2. Light Blue Bluestone Screening, 1/8" minus, by H. Bittle & Sons (516/924-7500).
3. Gray Trap Rock (122 stone screening), 3/16" minus, by George Schofield Co

b. Aggregate Binder: The aggregate binder shall be a natural, non-toxic, non-staining, odorless, environmentally safe powder consisting of 95% Psyllium with a 70% mucilliod content. The powder shall be of a size that not more than 10% is retained on a U.S. Standard #40 mesh sieve. The powder binder shall be with color to match stone.

i. Available Aggregate Binder Products: Subject to compliance with requirements, products that may be incorporated into the Work include, but are not limited to, the following:

ii. Stabilizer, Inc., 4832 East Indian Lane, Phoenix, Arizona 85018 (800/336-2438 or 602/837-8038). New York Metropolitan Area Representative: Ralph Crosby (914/476-8773).

iii. Or approved equal.

7. Dowels: Stainless-Steel Shapes: ASTM A 276, Type 316L.
8. Mortar setting bed, water resistant with pigment

Mortar

1. Portland Cement: ASTM C 150, Type I or II, except Type III may be used for cold-weather construction. Provide natural color or white cement as required to produce mortar color indicated.
2. Aggregate: ASTM C 144 and as follows:
    a. For pointing mortar, use aggregate graded with 100 percent passing No. 16 sieve.
    b. White Aggregates: Natural white sand or ground white stone.
    c. Colored Aggregates: Natural-colored sand or ground marble, granite, or other sound stone; of color necessary to produce required mortar color.
3. Mortar Pigments: Natural or synthetic iron oxides, compounded for use in mortar mixes and with a record of satisfactory performance in stone mortars.
    a. Available Manufacturers:
        1) Bayer Corporation; Industrial Chemicals Div.
        2) Davis Colors.
        3) Lafarge Corporation.
        4) Solomon Colors.
        5) Or approved equal.
4. Latex additive (water emulsion), serving as replacement for part of or all gaging water, of type specifically recommended by latex-additive manufacturer for use with job-mixed portland cement mortar and not containing a retarder.
5. Thin-Set Mortar:
    a. Dry-Set Portland Cement Mortar: ANSI A118.1.
    b. Latex-Portland Cement Mortar: ANSI A118.4.

PK-ESCR 033.3.1. SUBMITTALS

Statement of Qualifications: to be submitted to identify and exhibit landscape boulders installer qualifications as specified in Article “Qualifications” herein.

Product Data: for review and approval prior to ordering of stone material.

1. Submit complete data on quarry facilities for stone boulder type specified. Include information of location, production capabilities, and the nature and character of stone material that can be selected and supplied.
2. Material properties data for stone material type and foundation shall be submitted by the stone suppliers and certified as representative of the properties of stone material that can be supplied for the Project.
3. Submit an affidavit from respective quarry attesting that stone boulders of type required for the Project have been quarried and obtained from one quarry, is of top grade of material specified and conforms to additional requirements in Article “Quality Assurance” herein for Source Limitations for Stone.
4. Submit material product data and samples for each item in “Stone Miscellaneous Materials”.

Shop Drawings: Setting Drawings: Submit setting drawings showing the relationship to adjoining construction after final selection.

For stone boulders show location layouts and patterns coordinated with Contract Drawings and related to survey control points and dimensions to confirm alignment with adjacent conditions.

Establish and verify dimensions with concrete work of on-site walls, layouts and patterns of other work, and other like conditions. Include details to confirm how boulder stone units will be installed, including any modification/deviations from conditions indicated by Contract Documents.

1. Include coordination details for related, supporting, and adjoining work; as well as erection/installation diagrams. Show relative layout for all adjacent pavements, walls, foundation materials, etc. all correctly dimensioned. Shop drawings shall illustrate which gaps shall be filled with Chinking Stone Gap Filler and Stone Fines and which shall be filled with topsoil and planted.
2. Shop drawings to include all stone areas, including but not limited to:
    a. Landscape slope with seating stair at basketball court north of the Delancey Bridge
    b. Veneer stone wall at Williamsburg Bridge
    c. Nature exploration water play feature and boulder area
    d. Stone in landscape slope at Corlears, Delancey and 10th Bridges
    e. 10th Street playground seating stair and scramble
    f. 10th Street Water play area
3. Shop drawings that include Stone Type 2 shall include unique stone numbers corresponding to contract documents and cutting drawings including but not limited to:
    a. Fabrication requirements with shapes, thicknesses, connection to other work
    b. Typical and special anchoring and support details
    c. Dimensions
    d. Setting numbers for each stone unit (piece).

<u>Stone Samples and Stone Selection:</u>

1. The Contractor shall make all pre-selection arrangements at the source(s) of supply to ensure a ready supply of materials, equipment and manpower required for an efficient selection procedure.
2. The Contractor shall locate stone materials and be present for inspection at the source and on-site.
3. Stone Samples for Initial Selection: Submit representative unit sample of each stone type and finish, in quantity to indicate the full range of material characteristics, color, and texture specified prior to submittal of sample “For Verification”.
4. Stone Samples for Verification (Submitted Prior to Examination of Boulders at Quarry): Submit one (1) set of sample block units, at a minimum size of 12” high x 12” long x 18” depth in quantity to indicate the full range of material characteristics, color, and texture specified.
5. Quarry selection of representative stone types: Contractor shall assume a minimum of two (2) quarry visit by 2 persons each visit to tag and approve representative samples of each Stone Type. Engineer to approve stone types using the Visual Criteria for Stone including, but not limited to, size range, shape, finish, color, veining, and variation.

PK-ESCR 033.3.2. QUALITY CONTROL

Supplier Qualifications: Landscape Stones supplier shall be a firm or firms that have successfully supplied natural stonework of material type and condition, similar to the quality specified, and in the quantity shown for a period of not less than 10 years. Stone shall be obtained from quarries or suppliers capable of furnishing quantity, sizes and character of the stone required.

Installer Qualifications: Installation of natural stone Landscape Stones shall be by a firm that can exhibit proof of a minimum of seven (7) years prior successful experience with stone installations of similar material, design, and extent to that indicated for this Project.

1. Stonework Foreman: Installation firm for Landscape Stones Boulders of this Project shall have on staff a Supervising Foreman assigned to this Project before initial installations, who shall have at least 10 years total stonework installation experience. Submit detailed resume of past experience with dates, duration and scope identification, project name and location, and work function of previous projects worked on.
2. Use numbers of skilled workmen equal to work requirement or occasion. The skilled workmen shall be thoroughly trained and experienced in the necessary crafts and shall be completely familiar with the specific requirements and methods needed for performance of the work in this Section.

Mock Ups

1. Stones: prepare full size field assemblies for methods to demonstrate aesthetic effects and qualities of materials and execution at each area including:
    i. Landscape slope with Stone Type 3 and Stone Type 2 seating stair at basketball court north of the Delancey Bridge
    ii. Stone Type 5 veneer wall at Williamsburg Bridge
    iii. Nature exploration Stone Type 4 water play feature and Stone Type 3 boulder area
    iv. Stone Type 3 in landscape slope at Corlears, Delancey and 10th Bridges
    v. 10th Street Stone Type 2 seating stair and Stone Type 3 scramble
    vi. 10th Street Water play area Stone Type 2 seating and Stone Type 4
2. For stacked assemblies mockup shall include a minimum of three (3) courses vertical and three (3) courses horizontal.
3. Construct at earliest possible time and at an approved location before proceeding with respective work and after the Engineer’s approval of samples for selection and verification. Fabricate and construct to demonstrate aesthetic effects and qualities of materials and execution. Construct to comply with the following requirements, using materials indicated for the completed work, including same base construction, special features for expansion joints, and contiguous work as indicated:
4. Construct representative boulder placement sample/mockup in a location as approved by the Engineer.
5. Notify Engineer seven days in advance of dates and times when field sample/mockup will be constructed. Demonstrate the proposed range of aesthetic effects and workmanship. Obtain Engineer's approval of field sample/mockup before starting boulder installations of Project.

6. Mock ups shall illustrate which gaps shall be filled with Chinking Stone Gap Filler and Stone Fines and which shall be filled with topsoil and planted.
7. Approved mock ups may be incorporated into the final work, if approved by the Engineer.

PK-ESCR 033.3.3. DELIVERY, STORAGE, AND HANDLING

Handling and Unloading:

Handle stone to prevent chipping, breakage, soiling or other damage. Do not use pinch or wrecking bars without protecting edges of stone with wood or other rigid materials. Lift with wide-belt type slings wherever possible; do not use wire rope or ropes containing tar or other substances which might cause staining. If required, use wood rollers and provide cushion at end of wood slides.

Storage and Protection:

1. Protect stone and other system components during storage and construction against moisture, soiling, staining, and physical damage.
2. Store stone on wood skids or pallets, covered with non-staining, waterproof membrane. Place and stack skids and stones to distribute weight evenly and to prevent breakage or cracking of stones. Allow air to circulate around stone.

PK-ESCR 033.3.4. MANUFACTURER/SUPPLIER

Stone Source: Provide natural BOULDERS materials the following quarries or approved equal.

1. Champlain Stone, 27 Elm Street Warrensburg, NY 12885. Contact: Justin Pellino (518.623-2902). jpellino@champlainstone.com
2. New York Quarries, 305 County Route 111 Alcove, NY 12007 (518) 756-3138 info@newyorkquarries.com
3. Alverson Boulders as quarried by Greystone Quarries, as supplied by Geo. Schofield Co., Inc. Contact: James Taylor (732/433-4195).
4. or Approved Equal.

PK-ESCR 033.3.5. PRODUCTS

1. Stone Types: The following establishes acceptable stone material, color range, and finish under consideration for selection by the Engineer.
    a. Stones of sizes as indicated on the drawings matching grain, and colors of representative stones as selected by Engineer at stone material source.

PK-ESCR 033.4. METHODS

Work of this Section includes all labor, materials, equipment, and services necessary to provide selected natural stone Landscape Boulders in patterns and under conditions as shown on the Contract Drawings and/or specified herein, including but not limited to, the following:

Field measurements: Coordinate Landscape stone work and related layouts with trades and work preceding stone installation and take additional field measurements as necessary to accommodate conditions.

Provisions for Examinations at the Quarry: Landscape Stones shall be made available for inspection by Engineer prior to delivery to site. Contractor shall be responsible for arranging the schedule for the inspection trips to quarry sources by Engineer.

Inspection On-Site, At Delivery: The Engineer will inspect stone material upon delivery to site prior to installation. Allow a- time duration on-site, as approved by Engineer, for inspection and layout adjustment prior to installations.

Visual Criteria for Stone: All examinations, selections, and approvals shall be for the purpose of achieving a final appearance of stone with greatest possible uniformity, and will be based upon the following criteria.

1. All stone shall be of sound stock and uniform texture, and shall be free from holes, seams, chips, cracks, shakes, clay pockets, spalls, stains, starts, and other defects that are not natural to the stone specified and that would impair the strength, durability and appearance of the work, as determined by the Architect.
2. Inherent variations characteristic of the stone and the quarry from which the stone is to be obtained shall be brought to the attention of the Architect at the time the samples are submitted for approval and shall be subject to approval of the Architect.
3. Stone shall be selected for background color, veining, marking and matching, shall run in even shades, and shall be set accordingly.

Source Limitations for Stone: Obtain natural stone Landscape Boulders from a single quarry with resources to provide materials and products of consistent quality in appearance and physical properties without delaying the work.

Pre-installation Conference: Pre-installation Conference: Conduct conference at project site in prior to the installation.

1. Contractor, together with the Engineer, must schedule a meeting with the Engineer, the stonework fabricator, and the stonework installer at a time sufficiently in advance of stone installations to permit coordination. In addition, include in appropriate sequence, representatives of other related work.
2. At the meeting, review stone system quality control requirements including details of construction, outstanding submittals, contract drawings and specifications, and on site conditions affecting or which may affect installations.

Stone Fabrication for natural stones:

1. Provide stone units as indicated by Contract Drawings of solid block unit(s) of sizes indicated with natural finish appearance.
2. All corners and exposed faces shall be rubbed or shaped to remove any sharp edges in a manner approved by the Engineer and that will not show drill, grinding, or other tool marks.

Preparation and installation of aggregate base course:

1. Before any concrete is placed upon fine grade, the fine grade shall be prepared to line and grade and compacted where practicable with an approved self propelled roller weighing not less than ten (10) tons. All hollows and depressions developed under rolling shall be filled with acceptable material and rerolled. This process of shaping, filling, and rolling shall be repeated until no depressions develop.
2. The Contractor shall remove from the subgrade all debris, foreign material, and all other undesirable material designated by the Engineer. The fine grade shall not be muddy or

otherwise unsatisfactory when the pavement is placed upon it. If the fine grade becomes rutted or displaced, due to any cause whatsoever, the Contractor shall regrade same without additional payment.

3. Existing foundation material shall be supplemented as required to achieve the required thickness shown on the plans or provide for positive drainage of completed pavement.
4. Foundation material shall be evenly spread on prepared subgrade or existing foundation in the position shown on the plans or as directed by the Engineer. Foundation material shall be laid in four (4") inch layers (maximum) and rolled while wet with a seven (7) to twelve (12) ton tandem roller (or other approved method satisfactory to the Engineer) to the thickness shown on the plans or as directed by the Engineer.

PK-ESCR 033.5. MEASUREMENT

The quantity of STONE TYPE 1, STONE TYPE 2, STONE TYPE 3 and STONE TYPE 4 to be paid for shall be the number of TONS furnished and installed complete, in accordance with the plans, specifications, and directions of the Engineer. The method of determining boulder weight must be submitted to the Engineer for approval.

The quantity of STONE VENEER TYPE 5A to be paid for shall be the SQUARE FOOT furnished and installed complete, in accordance with the plans, specifications, and directions of the Engineer.

The quantity of STONE VENEER TYPE 5B, STONE VENEER TYPE 5C, and STONE VENEER TYPE 5D to be paid for shall be the SQUARE FOOT furnished and installed complete, in accordance with the plans, specifications, and directions of the Engineer.

PK-ESCR 033.6. PRICES TO COVER

The price bid shall be a unit price per TON of STONE TYPE 1, STONE TYPE 2, STONE TYPE 3, and STONE TYPE 4 shall include the cost of all labor, materials, and equipment required, including sourcing, selective fabrication, delivery to site, and installation of natural landscape stones in size indicated, foundation material for landscape stones and all incidental expenses necessary to complete the work in accordance with the plans, shop drawings, and specifications, to the satisfaction of the Engineer.

The price bid shall be a unit price per SQUARE FOOT of STONE VENEER TYPE 5A and shall include the cost of all labor, materials, and equipment required, including sourcing, fabrication, delivery to site, anchoring system, and installation of landscape veneer stones in size indicated, foundation material for landscape stones, and all incidental expenses necessary to complete the work in accordance with the plans, shop drawings, and specifications, to the satisfaction of the Engineer.

The price bid shall be a unit price per SQUARE FOOT of STONE VENEER TYPE 5B, STONE VENEER TYPE 5C, and STONE VENEER TYPE 5D and shall include the cost of all labor, materials, and equipment required, including sourcing, fabrication, delivery to site, anchoring system, and installation of landscape veneer stones in size indicated, foundation material for landscape stones, and all incidental expenses necessary to complete the work in accordance with the plans, shop drawings, and specifications, to the satisfaction of the Engineer.

Payment will be made under:

Item No.	Item	Pay Unit
PK-ESCR 035 A	**STONE TYPE 1**	**TON**
PK-ESCR 035 B	**STONE TYPE 2**	**TON**
PK-ESCR 035 C	**STONETYPE 3**	**TON**
PK-ESCR 035 D	**STONE TYPE 4**	**TON**
PK-ESCR 035 E	**STONE VENEER TYPE 5A**	**SF**
PK-ESCR 035 F	**STONE VENEER TYPE 5B**	**SF**
PK-ESCR 035 G	**STONE VENEER TYPE 5C**	**SF**
PK-ESCR 035 H	**STONE VENEER TYPE 5D**	**SF**

END OF SECTION

SECTION PK-ESCR 036 – PRE-CAST CONCRETE

PK-ESCR 036.1. INTENT

This section describes the furnishing and installation of precast concrete assemblies in accordance with the plans, specifications and directions of the Engineer.

PK-ESCR 036.2. DESCRIPTION

A. Under this item, the Contractor shall fabricate, furnish and install Pre-Cast Concrete Units as shown on plans and in accordance with the specifications and directions of the Engineer. The footing is described in item Concrete for Structures ESCR-4.06.

PK-ESCR 036.3. MATERIALS

1.1 MOLD MATERIALS

a) Molds: Provide molds and, where required, form-facing materials of metal, plastic, wood, or another material that is nonreactive with concrete and dimensionally stable to produce continuous and true precast concrete surfaces within fabrication tolerances and suitable for required finishes.

1.2 REINFORCING MATERIALS

a) Epoxy Coated Rebar:

i. Conforming to ASTM A934 & A775/A775M, Grade 60, Marine Grade Purple Epoxy-coated, clean and free of rust, dirt, grease or oils.

ii. Supports: Manufacturer's bolsters, chairs, spacers, and other devices for spacing, supporting, and fastening reinforcing bars and welded wire fabric in place according to CRSI's "Manual of Standard Practice," PCI MNL 117.

1.3 CONCRETE MATERIALS

a) Portland Cement: ASTM C 150, Type I (white) or Type III (gray), of same type, brand and source.

b) Custom precast units:

i. General: Comply with PCI MNL-120, PCI MNL-122, PCI MNL-123, PCI MNL-135, and ACI 318.

c) Concrete:

i. Comply with pertinent quality standards in accordance with ASTM C94/C94M.

ii. Portland Cement: ASTM C 150/C150M Type 1 (white) or Type 3 (gray). Provide same type, brand and source for all components of each precast fabrication.

iii. Mix Design for concrete to attain a minimum compressive strength, of 5000 psi (35MPa) when cured and tested at 28 Days in accordance ASTM C39/C39M and total air content between 4 percent and 6 percent.

iv. Aggregates: Clean, washed aggregates as required to produce selected color, pattern and texture. Course and fine aggregates to be from single source throughout the duration of the project.

d) Admixtures:

i. Chemical admixtures conforming to ASTM C494/C494M Type A and G.

ii. Color Admixture: ASTM 979, synthetic mineral-oxide pigments or colored water reducing admixtures, temperature stable, nonfading and alkali resistant.

a. Synthetic mineral oxide pigments conforming to ASTM C979/C979M.

b. Provide specific manufactured color pigments as indicated on the drawings.

c. Proportions of color admixtures in concrete are to be determined by the manufacturer to provide proper color or to match owner's samples.

d. Mix and consolidate color admixtures per manufacturer's recommendations.

e. Owner approved color manufactures:

1) Chromix by Sika Scofield; www.scofield.com; (800) 800-9900
2) Davis Integral Color by Davis Colors; www.daviscolors.com; (800) 356-4848
3) EA Integral Colors by E & A Supply Corp; http://www.eandasupply.com/; (888) 222-3573
4) Uni-Mix Integral Concrete Colorant by Butterfield Color; www.butterfieldcolor.com/; (800) 282-3388
5) Or approved equal.

e) Grout:

i. For exposed, finished joints; factor blended and packaged mortar containing hydraulic cement, fine aggregates and integral color pigments. Colors to be selected by Engineer. If a specific manufacturer has not been specified on drawings use one of the following approved products:

a. Polyblend by Custom Building Products; www.custombuildingproducts.com; (800) 272-8786

b. 1500 Series, sanded grout by Laticrete North America; https://.laticrete.com

c. Keracolor by Mapei, www.mapei.com; (800) 992-6273

d. Or approved equal.

f) Normal-Weight Aggregates: Except as modified by PCI MNL 117, ASTM C 33, with coarse aggregates complying with Class 5S.Revise subparagraph below to add descriptions of selected coarse- and fine-face aggregate colors and sources if required.

i. Coarse Aggregates: Selected, hard, and durable; free of material that reacts with cement or causes staining.

1. Gradation: Gap Graded.

ii. Fine Aggregates: Selected, natural or manufactured sand of the same material as coarse aggregate, unless otherwise approved by Engineer.

g) Water: Potable; free from deleterious material that may affect color stability, setting, or strength of concrete and complying with chemical limits of PCI MNL 117.

h) Air-Entraining Admixture: ASTM C 260, certified by manufacturer to be compatible with other required admixtures.

i) Water-Reducing Admixture: ASTM C 494, Type A.

j) High-Range, Water-Reducing Admixture: ASTM C 494, Type F.

k) Hycrete Waterproofing Admixture

1.4 GROUT MATERIALS

a) Sand-Cement Grout: Portland cement, ASTM C 150, Type I, and clean, natural sand, ASTM C 144. Mix at ratio of 1 part cement to 2-1/2 parts sand, by volume, with minimum water required for placement and hydration.

1.5 CONCRETE MIXES

A. Prepare design mixes for each type of concrete required.

i. Limit use of fly ash and silica fume to not exceed, in aggregate, 25 percent of portland cement by weight.

B. Design mixes may be prepared by a qualified independent testing agency or by qualified precast plant personnel at precast architectural concrete fabricator's option.

C. Limit water-soluble chloride ions to the maximum percentage by weight of cement permitted by ACI 318 (ACI 318M).

D. Normal-Weight Concrete Mixes: Proportion mixes by either laboratory trial batch or field test data methods according to ACI 211.1, with materials to be used on project, to provide normal-weight concrete with the following properties:

i. Compressive Strength (28 Days): 6000 psi (34.5 MPa).
ii. Maximum Water-Cementitious Materials Ratio: 0.45.

E. Water Absorption: 3 to 5 percent by volume, tested according to PCI MNL 117. Manufacturer to have 10 years of experience of producing concrete with a sub 5% water absorption rate. Manufacturer to provide 3 project examples with references for project they have performed with this criterion.

F. Lightweight backup mixes must be compatible with normal-weight face mixes to minimize bowing or warping. Retain lightweight concrete backup mixes if required or as an option if satisfactory durability and in-service performance are verified by fabricator.

G. Add air-entraining admixture at manufacturer's prescribed rate to result in concrete at point of placement having an air content complying with PCI MNL 117.

H. When included in design mixes, add other admixtures to concrete mixes according to manufacturer's written instructions.

PK-ESCR 036.3.1. FABRICATION

A. General:

a. Fabricate the work of this section to the sizes and shapes indicated on the drawings as indicated on the approved shop drawings.
b. Provide color and finishes as indicated on the drawings and to match owner samples.
c. Make exposed edges and chamfers sharp, straight and consistent. Provide flat surfaces to true planes.
d. Place and secure in the forms all anchors, clips, inserts, bolts lifting devices, shear ties and other embedded devices required for handling and installing the precast units for attachment of subsequent items as indicated or specified. Provide air bleed holes for embedded items as necessary to ensure voids or honeycombs do not form.
e. Provide all openings, recesses or block-outs required.
f. Provide temperature and shrinkage of reinforcement in accordance with ACI 318
g. Minor patching in plant is acceptable, provide structural integrity and appearance is not impaired.

B. Curing:

a. Form-cure the work for a minimum of 24 hours.
b. Wet cure for not less than 6 days after being removed from forms
c. Following curing period, allow units to air-dry for not less than an additional 7 days before being loaded for delivery.

B. Casting Tolerances:

d. Maintain casting and dimension tolerances within the following units:
    i. Length and width of precast units 10ft. or less shall not vary more than 1/8 in.
    ii. Thickness of units to vary not more than 1/8in.
e. Units ‘out of square’ more than 6 linear ft. 1/8 in. per ¼ in. total are not acceptable.
f. Location of cast-in place inserts, sleeves, conduits and electric junction boxes to not vary more than ¼ in. in any direction.
g. Bowing or warping: length/360; arrange so that the offset between units does not exceed offset tolerance.
h. Exposed joint dimension: ½ inch, plus or minus 1/8 inch.

C. MOLD FABRICATION

a. Molds: Accurately construct molds, mortar tight, of sufficient strength to withstand pressures due to concrete-placement operations and temperature changes.

b. Maintain molds to provide completed precast architectural concrete units of shapes, lines, and dimensions indicated, within fabrication tolerances specified.

    i. Edge and Corner Treatment: Uniformly radiused.

D. FABRICATION

a. Cast-in Anchors, Inserts, Plates, Angles, and Other Anchorage Hardware: Fabricate anchorage hardware with sufficient anchorage and embedment to comply with design requirements. Accurately position for attachment of loose hardware, and secure in place during precasting operations. Locate anchorage hardware where it does not affect position of main reinforcement or concrete placement.

b. Furnish loose steel plates, clip angles, seat angles, anchors, dowels, cramps, hangers, and other hardware shapes for securing precast architectural concrete units for support and adjacent construction.

c. Cast-in reglets, slots, holes, and other accessories in precast architectural concrete units to receive windows, cramps, dowels, reglets, waterstops, flashings, and other similar work as indicated.

d. All cast-in anchors, plates or inserts to be made from non-corrosive steel per PCI-ML117.

e. Reinforcement: Comply with recommendations in CRSI's "Manual of Standard Practice" and PCI MNL 117 for fabricating, placing, and supporting reinforcement.

    a. Clean reinforcement of loose rust and mill scale, earth, and other materials that reduce or destroy the bond with concrete.

    b. Accurately position, support, and secure reinforcement against displacement during concrete-placement and consolidation operations. Completely conceal support devices to prevent exposure on finished surfaces.

    c. Place reinforcement to maintain at least 3/4-inch (19-mm) minimum coverage. Arrange, space, and securely tie bars and bar supports to hold reinforcement in position while placing concrete. Direct wire tie ends away from finished, exposed concrete surfaces.

    d. Install welded wire fabric in practicable lengths. Lap adjoining pieces at least one full mesh and lace splices with wire. Offset laps of adjoining widths to prevent continuous laps in either direction.

f. Reinforce precast architectural concrete units to resist handling, transportation, and erection stresses.

g. Mix concrete according to PCI MNL 117 and requirements in this Section. After concrete batching, no additional water may be added.

h. Place concrete in a continuous operation to prevent seams or planes of weakness from forming in precast concrete units. Comply with requirements in PCI MNL 117 for measuring, mixing, transporting, and placing concrete.

i. Thoroughly consolidate placed concrete by internal and external vibration without dislocating or damaging reinforcement and built-in items. Use equipment and procedures complying with PCI MNL 117.

j. Comply with ACI 306.1 procedures for cold-weather concrete placement.

k. Comply with ACI 305R recommendations for hot-weather concrete placement.

l. Identify pickup points of precast architectural concrete units and orientation in structure with permanent markings, complying with markings indicated on Shop

Drawings. Imprint or permanently mark casting date on each precast architectural concrete unit on a surface that will not show in finished structure.

m. Cure concrete, according to requirements in PCI MNL 117, by moisture retention without heat or by accelerated heat curing using low-pressure live steam or radiant heat and moisture.

n. Discard precast architectural concrete units that are warped, cracked, broken, spalled, stained, or otherwise defective unless repairs are approved by Engineer.

E. FABRICATION TOLERANCES

a. Fabricate precast architectural concrete units straight and true to size and shape with exposed edges and corners precise and true so each finished panel complies with PCI MNL 117 product tolerances as well as position tolerances for cast-in items.

b. Fabricate precast architectural concrete units straight and true to size and shape with exposed edges and corners precise and true so each finished panel complies with the following product tolerances:

i. Overall height and width of units, measured at the face exposed to view: As follows:

10 feet (3 m) or under, plus or minus 1/8 inch (3 mm).

ii. Overall height and width of units, measured at the face not exposed to view: As follows:

10 feet (3 m) or under, plus or minus 1/4 inch (6 mm).

b. Position tolerances: For cast-in items measured from datum line location, as indicated on Shop Drawings.

i. Weld Plates: Plus or minus 1 inch (25 mm).

ii. Inserts: Plus or minus 1/2 inch (13 mm).

iii. Handling Devices: Plus or minus 3 inches (75 mm).

iv. Reinforcing Steel and Welded Wire Fabric: Plus or minus 1/4 inch (6 mm) where position has structural implications or affects concrete cover; otherwise, plus or minus 1/2 inch (13 mm).

PK-ESCR 036.3.2. SUBMITTALS

A. Product Data: For each type of product indicated.

ii. Project reference to substantiate qualifications of manufacturer and installer.

iii. Materials listed of items to be provided under this section, including manufacturer's specifications and other data for all manufactured materials and products.

B. Engineering calculations for all casting types

C. Design Mixes: For each concrete mix.

D. Utilize project team's established digital 3D modeling approach to coordinate with design team and other trades.

E. Shop Drawings: Detail fabrication and installation of precast architectural concrete units. Indicate member locations, plans, elevations, dimensions, shapes, cross sections, limits of each finish, and types of reinforcement, including special reinforcement.

iv. Indicate welded connections by AWS standard symbols. Detail loose and cast-in hardware, inserts, connections, and joints, including accessories.

v. Indicate locations and details of anchorage devices to be embedded in other construction.

vi. Indicate locations and details of joint treatment.

vii. Indicate locations and details of stone facings, anchors, and treatment of joints.

F. Samples: Before fabricating precast architectural concrete units, produce samples to establish the approved range of selections made under sample submittals. Produce a minimum of 3 sets of full-scale samples pieces as chosen by the Engineer, to demonstrate the expected range of finish, color, and texture variations.

a. In presence of Engineer, damage part of an exposed-face surface for each finish, color, and texture, and demonstrate materials and techniques proposed for repair of surface blemishes to match adjacent undamaged surfaces.

b. Maintain sample pieces during construction in an undisturbed condition as a standard for judging the completed Work.

c. Grout Samples for Initial Selection: Color charts consisting of actual sections of grout showing the manufacturer's full range of colors.

G. Welding Certificates: Copies of certificates for welding procedures and personnel.

H. Fabricator’s Qualification Statement: For firms and persons specified in "Quality Assurance" Article to demonstrate their capabilities and experience. Include lists of completed projects with project names and addresses, names and addresses of Engineers and owners, and other information specified.

I. Material Certificates: Signed by manufacturers certifying that each of the following items complies with requirements:

i. Concrete materials
ii. Reinforcing materials
iii. Admixtures
iv. Water-absorption test reports

PK-ESCR 036.3.3. QUALITY CONTROL

A. Fabricator Qualifications: A firm with a minimum of 25 years documented experience in the production of decorative architectural precast concrete units similar to those indicated for this project and with a record of successful in-service performance.

a. Has a quality control program that is APA or PCI certified by a professional engineer. Must submit program with bid.

b. Assumes responsibility for engineering precast architectural concrete units to comply with performance requirements. This responsibility includes preparation of shop drawings and comprehensive engineering analysis by a qualified professional engineer, under the state the project is located and experienced in design of precast units similar to the work of this section.

c. Fabricator to have minimum 7 years' experience with Rhino computer modeling, 3D CNC modeling and machining.

d. Plant shall be designated as PCI Certified for Group A, or as APA certified for production of architectural precast concrete products.

e. Operation with an established quality assurance program that complies with the procedures of Manual PCI MNL-116 of the Precast Concrete Institute.

f. Sufficient production capacity to produce and deliver required units without causing delay in the work.

g. Provide technical field services, trained personnel and required materials to make minor repairs.

h. Must have a qualified salesperson or technical representative able to make next-day in-person meetings at the project site to resolve issues.

B. Installer Qualifications: Installer to have no less than 5 years of documented experiences who has completed precast architectural concrete work similar in material, design, and extent to that indicated for this Project and whose work has resulted in construction with a record of successful in-service performance.

C. Acceptance Criteria of Precast Unit:

i. Castings that are not in compliance with specified tolerances shall be rejected.

j. Connections not complying with drawings and specification requirements shall cause for rejection if repairs cannot be made to maintain the connections function and integrity.

k. Any repair work performed to bring damaged or defective castings with compliance of the drawings and specifications shall be performed to the final satisfaction of the owner or replaced at Owner's discretion.

l. The following shall be considered defects and grounds for rejection:

i. Castings not matching approved sample for color or finish
ii. Non-uniformity of color or finish – including precast concrete units out of color range
iii. Ragged or irregular edges or reveals
iv. Excessive air voids or rock pockets on exposed surface
v. Casting marks, visible form joints or reinforcement shadow lines.
vi. Irregular surfaces planes
vii. Visible cracks
viii. Rust stains, blocking stains or acid stains on finished surface.
ix. Foreign material embedded and exposed on finished surface.
x. Poorly executed and visible repairs
xi. Any damage to panel(s) – including the above – done during shipping, handling and placing/installing

D. Testing Agency Qualifications: An independent testing agency acceptable to authorities having jurisdiction, qualified according to ASTM C 1077 and ASTM E 329 to conduct the testing indicated, as documented according to ASTM E 548.

E. Design Standards: Comply with ACI 318 (ACI 318M) and the design recommendations of PCI MNL 120, "PCI Design Handbook--Precast and Prestressed Concrete."

F. Quality-Control Standard: For manufacturing procedures and testing requirements, quality-control recommendations, and dimensional tolerances for types of units required, comply with PCI MNL 117, "Manual for Quality Control for Plants and Production of Architectural Precast Concrete Products."

G. Product Options: Drawings indicate size, profiles, and dimensional requirements of precast concrete units and are based on the specific types of units indicated. Other fabricators' precast concrete units complying with requirements may be considered

H. Welding: Qualify procedures and personnel according to AWS D1.1, "Structural Welding Code--Steel"; and AWS D1.4, "Structural Welding Code--Reinforcing Steel."

I. Quality-Control Testing: Test and inspect precast concrete according to PCI MNL 117 requirements.

J. Strength of precast concrete units will be considered deficient if units fail to comply with ACI 318 (ACI 318M) requirements.

K. Testing: If there is evidence that the strength of precast concrete units may be deficient or may not comply with ACI 318 (ACI 318M) requirements, owner will employ an independent testing agency to obtain, prepare, and test cores drilled from hardened concrete to determine compressive strength according to ASTM C 42.

   m. A minimum of three representative cores will be taken from units of suspect strength, from locations directed by Engineer.

   n. Cores will be tested in an air-dry condition.

   o. Strength of concrete for each series of 3 cores will be considered satisfactory if the average compressive strength is equal to at least 85 percent of the 28-day design compressive strength and no single core is less than 75 percent of the 28-day design compressive strength.

   p. Test results will be made in writing on the same day that tests are performed, with copies to Engineer, Contractor, and precast concrete fabricator. Test reports will include the following:

      xii. Project identification name and number.
      xiii. Date when tests were performed.
      xiv. Name of precast concrete fabricator.
      xv. Name of concrete testing agency.
      xvi. Identification letter, name, and type of precast concrete unit or units represented by core tests; design compressive strength; type of break; compressive strength at breaks, corrected for length-diameter ratio; and direction of applied load to core in relation to horizontal plane of concrete as placed.

L. Patching: If core test results are satisfactory and precast concrete units comply with requirements, clean and dampen core holes and solidly fill with precast concrete mix that has no coarse aggregate, and finish to match adjacent precast concrete surfaces.

M. Defective Work: Precast architectural concrete units that do not comply with requirements, including strength, manufacturing tolerances, and finishes, are unacceptable. Replace with precast concrete units that comply with requirements.

PK-ESCR 036.3.4. DELIVERY, STORAGE, AND HANDLING

A. Deliver precast architectural concrete units to project site in such quantities and at such

times to ensure continuity of installation. Store units at project site to prevent cracking, distorting, warping, staining, or other physical damage, and so markings are visible.

a. Lift and support units only at designated lifting and supporting points as shown on shop drawings.

b. Lifting or handling equipment: capable of maintaining complete control of units during manufacture, storage, transportation and installation.

c. Blocking and lateral support during transport and storage: clean, non-staining, without causing harm to exposed surfaces. Provide support to prevent bowing, warping or cracking.

d. Protect units to prevent staining, scarring, chipping or spalling.

B. Furnish anchorage items to be embedded in or attached to other construction without delaying the work. Provide setting diagrams, templates, instructions, and directions, as required, for installation.

PK-ESCR 036.3.5. WARRANTY

A. Fabricator to provide a one-year warranty against manufacturer's defect

B. Fabricator to provide a seven-year warranty against the effects of freeze-thaw

PK-ESCR 036.3.6. MANUFACTURER

A. Fabricators: Subject to compliance with requirements, fabricators offering products that may be incorporated into the Work include, but are not limited to, the following:

a. QCP, Norco, CA. www.qcp-corp.com. Contact: Matthew Houser - (347)931-3142 houser@qcp-corp.com
b. Southside Precast Products, NY - (716) 825-9300
c. David Kucera, Inc., Gardiner, NY - (845) 255-1044
d. Jersey Precast, NJ - (609) 587-6068
e. Blakeslee Prestress Inc. Branford, CT - 203-481-5306

B. Fabricator must submit a sample piece representative of at least one of the types of precast products on the project for approval to be pre-approved. Approval is at the sole discretion of the owner and the Engineer

PK-ESCR 036.3.7. FINISHES

A. Finish exposed-face surfaces of precast architectural concrete units to match approved design reference sample and as follows:

i. Textured-Surface Finish: Impart by form liners or inserts to provide surfaces free of pockets, streaks, and honeycombs, with uniform color and texture. Any air-pocket in the surface of the precast must be sacked or filled to match.

ii. Finish unexposed surfaces of precast architectural concrete units by float finish.

PK-ESCR 036.4. METHODS

A. EXAMINATION

1. Examine substrates and conditions for compliance with requirements for installation tolerances, true and level bearing surfaces, and other conditions affecting performance. Proceed with installation only after unsatisfactory conditions have been corrected.

2. Do not install precast concrete units until supporting concrete has attained minimum design compressive strength.

B. INSTALLATION

1. Anchor precast architectural concrete units in position by bolting, welding, grouting, or as otherwise indicated. Remove temporary shims, wedges, and spacers as soon as possible after anchoring and grouting are completed.
2. At bolted connections, use lock washers or other acceptable means to prevent loosening of nuts.
3. Grouting Connections: Grout connections where required or indicated. Retain grout in place until hard enough to support itself. Pack spaces with stiff grout material, tamping until voids are filled. Place grout to finish smooth, level, and plumb with adjacent concrete surfaces. Keep grouted joints damp for a minimum of 24 hours after initial set. Promptly remove grout material from exposed surfaces before it affects finishes or hardens.
    i. Camber, as Erected, between Adjacent Members of Same Design: 1/4 inch (6 mm).

C. REPAIRS

1. Repair exposed exterior surfaces of precast architectural concrete units to match color, texture, and uniformity of surrounding precast architectural concrete if permitted by Engineer.
2. Remove and replace damaged precast architectural concrete units if repairs do not comply with requirements.

D. CLEANING

1. Clean exposed surfaces of precast concrete units after erection to remove weld marks, other markings, dirt, and stains.
    i. Wash and rinse according to precast concrete fabricator's written recommendations. Protect other work from staining or damage due to cleaning operations.
2. Do not use cleaning materials or processes that could change the appearance of exposed concrete finishes.

PK-ESCR 036.5. MEASUREMENT Precast concrete units, seatwalls, and skate deterrents shall be measured for payment by each unit installed or by the linear foot, as noted below, to the satisfaction of the Engineer.

PK-ESCR 036.6. PRICES TO COVER

The price bid for Pre Cast Concrete Units shall be a unit price for each precast concrete assembly and shall include the cost of all labor, materials, equipment and expenses necessary to furnished, erected in accordance with the plans, specifications and directions of the Engineer. For Foundation Material for Concrete and Reinforcement see ESCR-4.06.

Payment will be made under:

Item No.	Item	Pay Unit
PK-ESCR 037	SKATE DETERRENT	EA
PK-ESCR 036 A	ESPLANADE PRE-CAST CONCRETE SEATWALL MODULE A	EA
PK-ESCR 036 B	ESPLANADE PRE-CAST CONCRETE SEATWALL MODULE B	EA
PK-ESCR 036 C	ESPLANADE PRE-CAST CONCRETE SEATWALL MODULE C	EA
PK-ESCR 036 D	ESPLANADE PRE-CAST CONCRETE SEATWALL MODULE D	EA
PK-ESCR 036 E	ESPLANADE PRE-CAST CONCRETE SEATWALL MODULE E	EA
PK-ESCR 036 F	ESPLANADE PRE-CAST CONCRETE SEATWALL MODULE F	EA
PK-ESCR 036 G	ESPLANADE PRE-CAST CONCRETE SEATWALL MODULE G	EA
PK-ESCR 036 H	ESPLANADE PRE-CAST CONCRETE SEATWALL MODULE H	EA
PK-ESCR 036 I	ESPLANADE PRE-CAST CONCRETE SEATWALL MODULE I	EA
PK-ESCR 036 J	ESPLANADE PRE-CAST CONCRETE SEATWALL MODULE J	EA
PK-ESCR 906 A	AMPHITHEATER PRE-CAST CONCRETE SEATWALL MODULE A	LF
PK-ESCR 906 B	AMPHITHEATER PRE-CAST CONCRETE SEATWALL MODULE B	LF
PK-ESCR 906 C	AMPHITHEATER PRE-CAST CONCRETE SEATWALL MODULE C	LF
PK-ESCR 906 D	AMPHITHEATER PRE-CAST CONCRETE SEATWALL MODULE D	LF
PK-ESCR 906 E	AMPHITHEATER PRE-CAST CONCRETE SEATWALL MODULE E	LF
PK-ESCR 906 F	AMPHITHEATER PRE-CAST CONCRETE SEATWALL MODULE F	EA
PK-ESCR 906 G	AMPHITHEATER PRE-CAST CONCRETE SEATWALL MODULE G	EA
PK-ESCR 906 H	AMPHITHEATER PRE-CAST CONCRETE SEATWALL MODULE H	EA
PK-ESCR 906 I	AMPHITHEATER PRE-CAST CONCRETE SEATWALL MODULE I	EA
PK-ESCR 906 J	AMPHITHEATER PRE-CAST CONCRETE SEATWALL MODULE J	EA
PK-ESCR 906 K	AMPHITHEATER PRE-CAST CONCRETE SEATWALL MODULE K	EA
PK-ESCR 906 L	AMPHITHEATER PRE-CAST CONCRETE SEATWALL MODULE L	EA
PK-ESCR 906 M	AMPHITHEATER PRE-CAST CONCRETE SEATWALL MODULE M	EA
PK-ESCR 906 N	AMPHITHEATER PRE-CAST CONCRETE SEATWALL MODULE N	EA
PK-ESCR 906 O	AMPHITHEATER PRE-CAST CONCRETE SEATWALL MODULE O	EA
PK-ESCR 906 P	AMPHITHEATER PRE-CAST CONCRETE SEATWALL MODULE P	EA
PK-ESCR 906 Q	AMPHITHEATER PRE-CAST CONCRETE SEATWALL, OTHER	EA

END OF SECTION

SECTION PK-ESCR 039 – BENCH, 1939 WF RPL SLATS

WORK: Under these Items, the Contractor shall furnish and install various types of **BENCH, 1939 WORLD'S FAIR W/RPL SLATS** in accordance with the plans, specifications, and directions of the Engineer.

MATERIALS: Unless otherwise herein specified, all materials and methods of construction shall conform to the requirements of the NYCDOT Standard Highway Specifications.

Benches shall be model No. 6737, 6737-E (armless) or 6736 (backless), as manufactured by Kenneth Lynch & Sons, Oxford, CT, "Liberty Bench" as manufactured by Kevin G. Lindelow Quality Site Furnishings, Frenchtown, NJ, or "World's Fair Bench" as manufactured by All City Play Equipment, Inc., Metuchen, NJ, or approved equal. There are minor variations from the standard detail dimensions among manufacturers.

STANDARDS: Bench standards shall be of cast ductile iron. The tensile strength shall meet a minimum of 65,000 psi, in accordance with ASTM A536, Grade 65-45-12. Standards shall be either painted or powdercoated, as per this specification.

Steel Back Supports, Seat Supports and Cross Bars: Shall be steel bar and channel of sizes as indicated on the drawings, formed to the curve of the back and seat and secured to the recycled plastic slats with vandal-resistant stainless steel screws.

Finishes: The Contractor shall supply either powdercoated or painted metal surfaces, including cast ductile iron bench standards, brace rods, steel back supports, seat supports, and cross bars. Color shall be Black. Both types of finishes are outlined below:

Powdercoating: All metal surfaces shall be powder coated with a polyester thermosetting powdercoating such as manufactured by Tiger Drylac U.S.A., Reading, PA, or approved equal. Standards, brace rods, steel back supports, seat supports, and cross bars shall be Gloss Black.

Powdercoating shall be applied to the metal in such a manner that the coating will not peel off. Ensure surfaces to be coated are clean and dry and free of grease, dust, rust, etc. All surfaces shall first receive phosphating and chromatizing treatments to improve the adhesion of the surface coating.

Powdercoating shall be applied to a film thickness of 3 to 4 mils by electrostatic spray process and bake finished per manufacturer's directions. It shall be applied without voids, tears, or cuts that reveal the substrate and shall thoroughly adhere to the metal without peeling when scratched with a pick device or knife blade point. All visible nuts, washers, and ends of all bolts shall be painted with touchup paint as described below.

Touchup and Repair: For minor damage caused by installation or transportation, touch-up finish in conformance with manufacturer's recommendations. Provide touch-up such that repair is not visible from a distance of six feet (6').

Laboratory Test For TGIC-Polyester Powder Coat: At the discretion of the Engineer, a sample TGIC-Polyester powder coated bench standard may be laboratory tested for bonding of the powdercoating to the metal. The test shall be the Cross Hatch test per ASTM D3359, Method B. Failure to satisfactorily pass this test shall be a basis for rejection.

Painting: All metal surfaces shall receive three (3) coats of shop applied paint. Immediately prior to painting, all surfaces shall be thoroughly clean. All surfaces that are rust free shall be cleaned in accordance with SP-1, Solvent Cleaning. Cleaning shall be performed with a solvent such as mineral spirits, xylol, or turpentine to remove all dirt, grease, and foreign matter. Surfaces that show evidence of scale and rust shall be cleaned in accordance with SP-2, Hand Tool Cleaning,

a method generally confined to wirebrushing, sandpaper, hand scrapers, or hand impact tools, or SP3, Power Tool Cleaning, a method generally confined to power wirebrushes, impact tools, power sanders, and grinders in order to achieve a sound substrate. After the standards have been cleaned and prepared, they shall be painted as follows:

First Coat: Universal Metal Primer, M07, White, as manufactured by Benjamin Moore & Co. or approved equal. The Primer is a phenolic alkyd flat finish coating having a dry film thickness of 2 mils. Paint requires one (1) to two (2) hours drying time before recoating.

Second and Third Coats: D.T.M.(Direct to Metal) Alkyd semi-gloss, Safety Black, as manufactured by Benjamin Moore & Co., or approved equal. The coating is a modified alkyd having a dry film thickness of 2 mils for each coat. Paint requires eight (8) hours drying time before recoating.

All three (3) coats shall be shop painted. All paints shall be applied when the ambient air temperature is forty five (45) degrees F. and rising and when surfaces to be painted are moisture free. No painting will be allowed below the minimum ambient air temperature. In addition, no painting will be allowed below the temperature at which moisture will condense on surfaces; the ambient temperature must be 5 degrees above the dew point.

BENCH SLATS – RECYCLED PLASTIC LUMBER: Recycled plastic lumber slats shall be fabricated from a minimum ninety percent (90%) post-consumer recycled high density polyethylene (HDPE). HDPE resins shall meet the requirements of ASTM D1248 for Type II or IV (high density), Grade G7. Materials shall contain no toxic substances. Recycled plastic lumber shall contain UV inhibited pigment and shall not absorb moisture, corrode, rot, warp, splinter, or crack and shall not contain fiberglass or any material that will be irritating in contact with skin. Color to be Cedar, Brown or Weathered Wood unless otherwise indicated on the plans.

Recycled plastic lumber slats shall be internally reinforced or externally supported with additional steel bar and channel supports. The Contractor shall submit shop drawings showing all external supports if non-reinforced plastic lumber is used. Both types of plastic lumber shall meet the requirements specified below.

Recycled plastic lumber slats (without reinforcement) shall comply with or be tested in accordance with provisions of the following:

ASTM D6108	Standard Test Method for Compressive Products of Plastic and Shapes
ASTM D6109	Standard Test Method for Flexural Properties of Unreinforced and Reinforced Plastic Lumber
ASTM D6111	Standard Test Method for Bulk Density and Specific Gravity of Plastic Lumber and Shapes by Displacement
ASTM D6112	Standard Test Methods for Compressive and Flexural Creep and Creep Rupture of Plastic Lumber and Shapes
ASTM D6117	Standard Test Methods for Mechanical Fasteners in Plastic Lumber and Shapes
ASTM D1248	Standard Specifications for Polyethylene Plastics

Composition and mechanical properties shall be as follows:

Minimum Recycled Content	90%
Minimum High Density Polyethylene	70%
Maximum Percentage of Materials other than Polyolefins	5%
Minimum Specific Gravity (ASTM D6111)	0.02 lbs-in3
Minimum Flexural Modulus (ASTM D6109)	85,000 psi
Minimum Nail Pull-out Strength (ASTM D6117)	700 lbs

Flame Spread, Class C or better, tested in accordance with ASTM E84.

Coefficient of Thermal Expansion (ASTM D6341), in the range of -10C to 30C, shall not exceed 70 x 10-6/°F.

The City reserves the right to independently test samples of slats from the job site. Random samples to be supplied to the Engineer for identification, at the request of the Engineer. Should the slats provided on the job site not be as previously approved, the Contractor shall replace all the incorrect slat lumber at no extra cost to the City.

Reinforced Plastic Lumber: Reinforced plastic slats shall be precision machined to receive the internal steel support bars and allow expansion and contraction of the slats, such as Second Site Systems slats, Patent No. 5,660,907, as manufactured by Victor Stanley, Inc., Dunkirk, MD, or approved equal. The slats, with supports on minimum forty six inch (46”) centers and a one and one-half inch by one-quarter inch (1-1/2” x 1/4”) steel support strap midway between the legs, shall be capable of bearing a five hundred pound (500 lb.) load for a minimum twenty four hours (24 hrs.) with a maximum deflection of one-quarter inch (1/4”) with the weight in place and one-sixteenth inch (1/16”) with the weight removed. As-equal submittals will require test data confirming this tolerance.

The different coefficients of expansion require sufficient play in the slot and spacing of fasteners to prevent cracking and splitting. Internal steel reinforcement bars shall be made of A36 electric furnace mild steel from recycled steel scrap. Steel dimension shall be one quarter inch by one inch (1/4” x 1”), secured with stainless steel set screws, countersunk, with the resulting cavity filled with recycled plastic plugs.

The steel bars shall be hot dipped galvanized and powdercoated to match the color of the recycled plastic lumber slats.

Fabrication Tolerances: Ends shall be smooth with clean cuts, cross-sections shall not have voids greater than 1/2" dia. Voids of 1/2" dia. or less shall be filled with a matching color of silicone caulk, as per manufacturer’s specifications. All edges shall be eased. Maximum variation from flat surface across section shall be 1/8".

Delivery and Storage: Keep materials protected at all times against exposure to extreme heat or impact. All material shall be bundled and fully supported during shipping and storage to prevent creep. Any lumber that is damaged or excessively scratched will be rejected and replaced with new. All slat material must be straight and true when bolted to the standards.

Hardware: Bolts, locknuts, and washers used to secure slats to standards shall be stainless steel. Bolt or wood screw used for mid section steel support strap (RPL only) shall be a vandal resistant type, either stainless steel or hot-dipped galvanized. Type and dimensions of all bolts, nuts, and washers shall be as indicated on the plans. Anchor bolts used to secure the benches to pavements may be either stainless steel or hot-dipped

galvanized steel. Bolts for securing slats shall be provided with nylon lock nuts so as to render the connection vandal resistant. Steel support straps shall be secured with (3/8") hot dipped galvanized or stainless steel screws with vandal resistant heads.

Concrete: Concrete for slabs or footings shall be class B-32 concrete per the NYCDOT Standard Highway Specifications, *Section ESCR-4.06* and shall be of the dimensions indicated on the plans.

ASSEMBLY AND INSTALLATION: Benches shall be pre-assembled before being installed in their final location and properly secured in place by anchor bolts drilled into concrete footings or slab, as indicated on the plans.

SUBMITTALS: All submittal shall be as per the S-Pages.

Shop Drawings: The Contractor shall submit shop drawings showing all additional steel supports if unreinforced plastic lumber slats are proposed.

Foundry Certificates: Certifying Ductile Iron used in bench standards shall be submitted. The certificate shall be on foundry letterhead, dated and signed by the manufacturer with the Contract No., Contractor name, and Class of Ductile Iron provided.

Sample: The Contractor shall submit a twelve inch (12") sample of the recycled plastic lumber slat for surface and color approval. Required test results shall be submitted for unreinforced recycled plastic lumber slats.

Paint Substitution: A written request for any paint substitution must be submitted to the Engineer. The Contractor shall submit manufacturer's Data Sheets and installation instructions for approval of any proposed as-equal product no less than two (2) weeks prior to application.

MEASUREMENT AND PAYMENT: The quantity of **BENCH, 1939 WORLD'S FAIR W/RPL SLATS** to be paid for under this Item shall be the number of **LINEAR FEET** of each type, measured in place along the top slat, installed in accordance with the plans, specifications, and directions of the Engineer.

The price bid shall be a unit price per **LINEAR FOOT** of each type bench furnished and installed and shall include the cost of all labor, materials, equipment, and incidentals necessary to complete the work, including recycled plastic lumber (R.P.L.) slats, steel supports, hardware, submittals, and all finishes, in accordance with the plans and specifications, to the satisfaction of the Engineer.

Excavation and Concrete for footings or concrete slab shall be paid for under their respective contract items.

Item No.	Item	Pay Unit
PK-ESCR 039	Bench, 1939 WF RPL Slats, 4' LENGTH	L.F.

END OF SECTION

SECTION PK-ESCR 042 – SITE FURNISHINGS

PK-ESCR 042.1. INTENT.

This section describes the products and installation of Site Furnishings in accordance with the plans, specifications and directions of the Engineer.

PK-ESCR 042.2. DESCRIPTION.

A. Under this Section, the Contractor shall furnish and install the followings Site Furnishings, in accordance with the Contract Drawings, specifications and directions of the Engineer:

1. Circular Tables and Chairs Type 1
2. Circular Table and Chairs Type 1, Accessible
3. Circular Table and Chairs Type 1, with Umbrella Hole
4. Circular Table and Chairs Type 1, Accessible, with Umbrella Hole
5. Steel Umbrella Surface Mount
6. Steel Umbrella Sleeve and Bracket
7. Steel Umbrella Table Mount
8. BigBelly Bin
9. Hot Coal Bin
10. Circular Tables and Chairs Type 2
11. Circular Tables and Chairs Type 2, Accessible
12. Circular Tables and Chairs Type 2, with Umbrella Hole
13. Circular Tables and Chairs Type 2, Accessible, with Umbrella Hole

PK-ESCR 042.3.1. REFERENCES.

A. ASTM Testing Standards

1. ASTM B 117 – Standard Practice for Operating Salt Spray (Fog) Apparatus.
2. ASTM D 522 – Standard Test Methods for Mandrel Bend Test of Attached Organic Coatings.
3. ASTM D 523 – Standard Test Method for Specular Gloss.
4. ASTM D 2247 – Standard Practice for Testing Water Resistance of Coatings in 100% Relative Humidity.
5. ASTM D 2794 – Standard Test Method for Resistance of Organic Coatings to the Effects of Rapid Deformation (Impact).
6. ASTM D 3359 – Standard Test Methods for Measuring Adhesion by Tape Test.
7. ASTM D 3363 – Standard Test Method for Film Hardness by Pencil Test.
8. ASTM G 155 – Standard Practice for Operating Xenon Arc Light Apparatus for Exposure of Non-Metallic Materials.

B. ISO Testing Standards:

1. ISO 1520 – Paints and Varnishes – Cupping Test.
2. ISO 2815 – Paints and Varnishes – Buchholz Indentation Test.

C. ANSI/BIFMA Testing Standards:

1. ANSI/BIFMA X5.4-2005 – Standard Test for Lounge Seating.

PK-ESCR 042.3.2. SUBMITTALS.

A. Product Data: Submit manufacturer's product data, storage and handling requirements and recommendations, installation methods and available colors, styles, patterns and textures.

B. Shop Drawings: Submit manufacturer's shop drawings, including plans and elevations, indicating overall dimensions for approval by the Engineer.

C. Samples: Submit manufacturer's samples of materials, finishes, and colors, including three (3) samples of specified color as applied to an 8 inch by 8 inch square of specified metal for approval by the Engineer.

PK-ESCR 042.3.3. DELIVERY, STORAGE, AND HANDLING.

A. Delivery: Deliver materials to site in manufacturer's original, unopened containers and packaging, with labels clearly identifying product name and manufacturer.

B. Storage: Store materials in clean, dry area in accordance with manufacturer's instructions. Keep materials in manufacturer's original, unopened containers and packaging until installation.

C. Handling: Protect materials and finish during handling and installation to prevent damage.

PK-ESCR 042.3.4. WARRANTY.

A. Warranty Information:

1. Products will be free from defects in material and/or workmanship for a period of three years from the date of substantial completion.
2. The warranty may exclude damage resulting from accident, misuse, tampering, negligence, or abuse.
3. Products shall be repaired or replaced to the satisfaction of the Engineer any items found defective upon inspection by an authorized manufacturer service representative and Engineer.

PK-ESCR 042.3.5. MANUFACTURER. Manufacturer for Circular Table and Chairs Type 1, Accessible-Circular Table and Chairs Type 1, with Umbrella HoleSteel Umbrella Surface MountSteel Umbrella Sleeve and Bracket

A. Steel Umbrella Table Mount
B. Circular Tables and Chairs Type 2Circular Tables and Chairs Type 2, Accessible Circular Tables and Chairs Type 2, with Umbrella Hole
C. Circular Tables and Chairs Type 2, Accessible with Umbrella Hole

Landscape Forms, Inc., 431 Lawndale Avenue, Kalamazoo, Michigan 49048. Toll Free (800) 521-2546. Phone (269) 381-0396. Fax (269) 381-3455. Website: www.landscapeforms.com; E-mail: specify@landscapeforms.com

A. Manufacturer for BigBelly Bin:
    a. BigBelly, Clean Cube, or approved equal
B. Manufacturer for Hot Coal Bin
    a. RJ Thomas Mfg Co, or approved equal

PK-ESCR 042.3.6. PRODUCTS.

A. CIRCULAR TABLE AND CHAIRS TYPE 1: Carousel Table, Dining Hoop, 4 seat unit, Metal grid seats, Catena Tabletop
B. CIRCULAR TABLE AND CHAIRS TYPE 1: ACCESSIBLE: Carousel Table, Dining Hoop, 3 seat unit, Metal grid seats, Catena Tabletop
C. CIRCULAR TABLE AND CHAIRS TYPE 1, WITH UMBRELLA HOLE: Carousel Table, Dining Hoop, 4 seat unit, Metal grid seats, Catena Tabletop
D. CIRCULAR TABLE AND CHAIRS TYPE 1: ACCESSIBLE, WITH UMBRELLA HOLE: Carousel Table, Dining Hoop, 3 seat unit, Metal grid seats, Catena Tabletop
E. STEEL UMBRELLA SURFACE MOUNT: Solstice, Altair
F. STEEL UMBRELLA SLEEVE AND BRACKET: Solstice, Altair
G. STEEL UMBRELLA TABLE MOUNT: Solstice, Altair
H. CIRCULAR TABLES AND CHAIRS TYPE 2 : Casual Hoop, 4 seat unit, Metal grid seats, Catena Tabletop
I. CIRCULAR TABLES AND CHAIRS TYPE 2, ACCESSIBLE: Carousel Table, Casual Hoop, 4 seat unit, Metal grid seats, Catena Tabletop
J. CIRCULAR TABLES AND CHAIRS TYPE 2, WITH UMBRELLA HOLE: Casual Hoop, 4 seat unit, Metal grid seats, Catena Tabletop
K. CIRCULAR TABLES AND CHAIRS TYPE 2, ACCESSIBLE, WITH UMBRELLA HOLE: Casual Hoop, 4 seat unit, Metal grid seats, Catena Tabletop
L. BIG BELLY BIN: BigBelly HC5.5
M. HOT COAL BIN HCB/B-1 Hot Coal Bin

PK-ESCR 042.3.7. MATERIALS AND FINISHES.

A. Circular table and chairs type 1 and type 2 shall be Catena Stainless Steel
B. Circular table and chairs type 1 and type 2 accessible shall be Catena Stainless Steel
C. STEEL UMBRELLA SURFACE MOUNT: Aluminum, Powerdercoated Custom Color
D. STEEL UMBRELLA SLEEVE AND BRACKET: Aluminum, Powerdercoated Custom Color
E. STEEL UMBRELLA TABLE MOUNT: Aluminum, Powerdercoated Custom Color

PK-ESCR 042.4. METHODS.

The following methods of installation shall be used.

A. Examination:
    1. Examine areas to receive the Site Furnishings.
    2. Notify Engineer of conditions that would adversely affect installation or subsequent use.
    3. Do not begin installation until unacceptable conditions are corrected and acceptance verified in writing by Engineer.
B. Installation:
    1. Install Site Furnishings in accordance with manufacturer’s instructions at locations indicated on the Drawings.
    2. Locate Site Furnishings as directed by Engineer.
    3. Install Site Furnishings plumb and level.

C. Adjusting:

1. Finish Damage: Repair minor damages to finish in accordance with manufacturer's instructions and as approved by Engineer.

2. Component Damage: Remove and replace damaged components that cannot be successfully repaired as determined by Engineer.

D. Cleaning: Clean Site Furnishings promptly after installation in accordance with manufacturer's instructions. Do not use harsh cleaning materials or methods that could damage finish.

E. Protection: Protect installed Site Furnishings to ensure they will be without damage or deterioration at time of Substantial Completion.

PK-ESCR 042.5. MEASUREMENT.

The quantities of Site Furnishings to be measured for payment shall be the quantity of each type Site Furnishing installed at the site to the satisfaction of the Engineer.

PK-ESCR 042.6. PRICES TO COVER.

The prices bid shall be the unit price per EACH type site furnishing Item covered under this Section and shall include the cost of furnishing all labor, materials, equipment, insurance, and incidentals necessary to furnish, assemble and install the Site Furnishings including, but not limited to, chair arm rests and glides, and hardware, all in accordance with the Contract Drawings, the specifications and the directions of the Engineer.

Payment will be made under:

Item No.	***Item***	***Pay Unit***
PK-ESCR 045 A	**Circular Table and Chairs Type 1**	**EA**
PK-ESCR 045 B	**Circular Table and Chairs Type 1, Accessible**	**EA**
PK-ESCR 045 C	**Circular Table and Chairs Type 1, with Umbrella Hole**	**EA**
PK-ESCR 045 D	**Circular Table and Chairs Type 1, Accessible, with Umbrella Hole**	**EA**
PK-ESCR 046 A	**Steel Umbrella Surface Mount**	**EA**
PK-ESCR 046 B	**Steel Umbrella Sleeve and Bracket**	**EA**
PK-ESCR 046 C	**Steel Umbrella Table Mount**	**EA**
PK-ESCR 046 D	**BigBelly Bin**	**EA**
PK-ESCR 218	**Hot Coal Bin**	**EA**
PK-ESCR 927 A	**Circular Tables and Chairs Type 2**	**EA**
PK-ESCR 927 B	**Circular Tables and Chairs Type 2, Accessible**	**EA**
PK-ESCR 927 C	**Circular Tables and Chairs Type 2, with Umbrella Hole**	**EA**
PK-ESCR 927 D	**Circular Tables and Chairs Type 2, Accessible with Umbrella Hole**	**EA**

END OF SECTION

SECTION PK-ESCR 044 – PNEUMATIC EXCAVATION AROUND TREES

PK-ESCR 44.1. INTENT

Work covered under this section shall be performed at the locations indicated on the Plans, in accordance with the contract documents, and as directed by the Engineer.

PK-ESCR 44.2. DESCRIPTION

A. The intent of this section is to perform pneumatic excavation and backfilling work at locations where trees exist within the work area and are required to remain, requires the protection of tree roots during excavation and backfilling, and implements, as needed, a temporary excavation support system.

PK-ESCR 44.3. MATERIALS

A. Materials shall meet the following requirements, as modified by any supplemental landscape specifications or special notes included in the contract documents. Where indicated, refer to the latest revision/edition of Standard Specifications of the New York State Department of Transportation (NYSDOTSS):

1. PNEUMATIC EXCAVATING TOOL. Excavation shall be performed through the use of a pneumatic excavation tool with the following requirements:

    a) The high air velocity excavation tool shall be specifically designed to fracture, pulverize, and displace

    b) and semi-porous soils without harming or causing damage to tree roots, existing subsurface utilities or other non-porous objects.

    c) The Contractor shall submit catalog cuts from the manufacturer verifying that the Pneumatic excavation tool meets the following criteria:

    Rated Operating Pressure: 6.2 – 7.0 bar
    Air Stream Velocity at Cutting Head: 2,200 – 2,500 km/hr
    Air Displacement: 4,000 – 5,000 L/min

2. AIR COMPRESSOR. The air compressor may be either a portable or truck mounted unit and shall be adequately sized as required to power the pneumatic excavation tool in accordance with the manufacturer's recommendations for the pneumatic excavating tool.

3. VACUUM TRUCK. A vacuum truck should be used to collect excavated spoil directly from the trench or pit.

4. CONTAINMENT STRUCTURE. To prevent the spread of excavated soil onto adjacent roadways and areas beyond the designated work zone limits, the Contractor shall provide a mobile structure or barrier to contain the material dislodged by the pneumatic excavation tool from the trench or pit. Timber or corrugated metal shields, tents supported on tubular frames or other structures as approved by the engineer may be used.

5. ROOT PROTECTION. The following are required for root protection:

Item	NYSDOTSS Section
Quilted Covers	711-02
Burlap	711-06

6. BACKFILL. The following are required for backfill material:

Item	NYSDOTSS Section
Topsoil	713-01
Limestone	713-02
Fertilizer	713-03
Mycorrhizal Funghi	713-09
Compost	713-15

PK-ESCR 44.3.1. SUBMITTALS

A. The Contractor shall supply the ISA Certified Arborist with information as needed for the Arborist to prepare periodic reports to the Engineer summarizing the number, type, and condition of trees adjacent to each area of pneumatic excavation; indicating the duration of open excavation; and identifying any root damage and actions taken.

PK-ESCR 44.4. EXCAVATION PROCEDURES AND METHODS

The Contractor shall meet all requirements of this section, including transmitting any required submittals.

(A) DUST CONTROL

The work area shall be watered thoroughly at least twenty-four (24) hours in advance of, but no more than forty-eight (48) hours prior to the start of any pneumatic excavation to reduce the incidence of airborne dust resulting from the pneumatic excavation operation.

(B) EXCAVATION – GENERAL

All excavation using the pneumatic excavation tool shall be performed in accordance with the manufacturer's recommendations to remove soil without damage to the roots of trees, buried structures, and/or utilities either in or adjacent to the excavation. The Contractor shall excavate within limits designated for pneumatic excavation shown on the Contract Plans, or as directed by the Engineer, using the pneumatic excavating tool. When working near utilities, the Contractor shall be responsible to locate underground facilities as required under 16 NYCRR Part 753.

(C) EXCAVATION – TEMPORARY EXCAVATION SUPPORT SYSTEM

Approved sheeting and bracing shall be used where necessary to support the sides of the excavation, in order to: prevent damage to subsurface structures and adjacent buildings; safeguard persons and property; minimize inconvenience to traffic and the public; protect the structure to be installed; support the adjacent tree(s); and provide suitable and safe working conditions. Except as otherwise provided, deviations from the above will be permitted only where, in the judgment of the Engineer, such exception will not result in any of the hazards described above.

In cases where sheeting and bracing will not adequately protect adjacent structures from damage and settlement, the Contractor will be required to use such measures as are necessary to safely support and maintain adjacent and abutting property and structures, support the tree without causing damage to the tree, and to maintain the work safe to life, limb, and property.

All sheeting and bracing systems that the Contractor elects to use or that are ordered to use by the Engineer of the Department shall comply with the requirements of the NYCDEP Standard Sewer and Water Specifications, and must receive the approvals stated therein.

Unless otherwise specified in the Contract Drawings or these Specifications or specifically permitted in writing by the Engineer, the Contractor shall be required to withdraw and remove all sheeting and bracing simultaneously with the backfilling of trenches and excavations.

(D) ROOT PROTECTION

The Contractor shall place wet burlap or cotton mats upon both the fibrous and structural roots immediately after they have been exposed by the pneumatic excavating tool. The burlap or cotton covering may be removed to perform inspection or utility installation operations, but the Contractor shall be required to keep the burlap or cotton towels wet and the roots moist until backfilling is complete.

The Engineer shall be immediately informed of any damaged tree roots. No tree roots may be pruned except as specifically authorized by the Arborist. In the case that the concentration of roots obstructs the placement of utilities, footings, or other structures, limited pruning may be necessary as directed by the Arborist. Tree roots in excess of one (1) inch in diameter, measured at the edge of the excavation, shall be cut cleanly at the edge of excavation using a sharp cutting tool. All root pruning shall be performed under the direction of the ISA Certified Arborist.

(E) UTILITY INSTALLATION

Utilities shall be installed as shown on the drawings, including bedding materials. In order to facilitate backfilling on an expedited basis, the Contractor shall install the materials for utilities in a continuous operation along with the pneumatic excavation operations to allow for backfilling of the trench within the same work shift.

Exposed root systems may impede utility installation within an open trench. Therefore, workers shall pass each individual item of utility construction carefully through the root system for placement and assembly within the excavated trench.

(F) BACKFILLING OPERATIONS

Excavations containing exposed tree roots shall be backfilled immediately after the Engineer inspects and approves the required construction work. The Contractor shall provide adequate work crews to backfill the excavated area within twenty-four (24) hours of excavation. Upon completion of inspection of installation work, the Contractor shall remove the burlap or cotton matting and commence backfilling operations.

Suitable excavated material may be used as backfill up to a depth of twelve (12) inches below finished grade. The existing soil shall be amended with humus, peat, peat moss, or source-separated compost in the ratio of one part organic to seven parts excavated soil. If required, provide additional clean backfill material. The Contractor shall properly dispose of excess and unsuitable excavated materials.

Backfilling shall be performed with care not to damage the exposed roots. The Contractor shall compact the backfill material under the direction of the ISA Certified Arborist. The Contractor shall compact the backfill material to be commensurate with the density of the undisturbed adjacent soils unless otherwise directed by the ISA Certified Arborist. Surface restoration including backfilling the twelve (12) inches of the excavation with approved topsoil, shall be performed separately under the appropriate items.

PK-ESCR 44.5. MEASUREMENT

The contract price for “PNEUMATIC EXCAVATION AROUND TREES” shall be the unit price bid per cubic yard to perform the work described herein, at the locations and to the limits indicated on the Plans.

PK-ESCR 44.6. PRICES TO COVER

The unit price bid per cubic yard shall include the cost of all labor, materials, plant, equipment, professional engineering design services, and insurance needed to perform the work, including all other work incidental thereto all in accordance with the specifications and as directed by the Engineer.

No separate payment will be made for replacement trees required by the Engineer that the Contractor shall acquire and plant as a result of damage to trees caused by the Contractor’s excavation and/or backfilling methods.

Payment will be made under:

Item No.	Item	Pay Unit
PK-ESCR 044	PNEUMATIC EXCAVATION AROUND TREES	C.Y.

END OF SECTION

SECTION PK-ESCR 077 – PIPE RAIL FENCE

WORK: Under these Items, the Contractor shall furnish and erect powder coated pipe rail fences of the various types and sizes where shown on the plans or directed by the Engineer, in accordance with the plans and specifications.

MATERIAL: All posts, rails and dowels shall be galvanized steel pipe in accordance with A.S.T.M. Specification F-1083 and ASTM A-53 schedule 40. All material as delivered shall be in condition for erection without field fitting or cutting.

Castings shall be fabricated from ductile iron grade 65-45-12. Finials for PIPE RAIL FENCE (TYPE A), and posts for PIPE RAIL FENCE (TYPE C) (foundry certificate must be supplied) shall be cast ductile iron ASTM A-536-84 as manufactured by Wemco Castings, Bohemia, NY, or approved equal.

WELDING: Welding shall be done by competent mechanics as specified in the NYCDOT Standard Highway Specifications and all welds shall be ground smooth. All welds shall be spot primed immediately after welding in the shop with a protective zinc-rich metal primer.

SURFACE COATINGS: After welding, all posts, rails and castings shall be powdercoated with either polyvinyl chloride (PVC) or TGIC-Polyester, (PVC coating shall be 10 to 15 mils thick, TGIC-Polyester shall be 3 to 6 mils thick).

Galvanizing of all components shall provide an acceptable substrate for applied powdercoatings. No lacquer, urethane or other coatings which would prevent proper adhesion of powdercoating shall be applied to the pipe.

The powdercoating shall be applied to the galvanized surfaces in such a manner that the coating will not peel off. Ensure surfaces to be coated are clean and dry and free of grease, dust, rust, etc. All coated parts shall first receive phosphating and chromatizing treatments to improve the adhesion of the surface coating.

Color to be black unless otherwise indicated on the plans. The entire fence installation shall be coated with one of the two following types of powder coating. All fence components shall be coated on all surfaces.

TYPE I - Polyvinyl Powdercoating: PVC Powdercoating shall be applied to the galvanized steel or iron by the fluid bed method to a preheated base which has been cleaned and primed prior to submersion in vinyl, resulting in a firm bond between the PVC and the metal. PVC shall be applied to a film thickness of 10 to 15 mils without voids, tears or cuts that reveal the substrate and shall thoroughly adhere to the metal without peeling when scratched with a pick device or knife blade point.

TYPE II - TGIC-Polyester Powdercoating: TGIC-Polyester Powdercoating shall be applied to the galvanized steel or iron in such a manner that the coating will not peel off. The TGIC-Polyester shall be applied at a film thickness of 3 to 6 mils by electrostatic spray process and bake finished per manufacturer's directions. The TGIC-Polyester shall be applied without voids, tears or cuts that reveal the substrate and shall thoroughly adhere to the metal without peeling when scratched with a pick device or knife blade point.

TESTS:

Field Test For PVC Powdercoating: As per ASTM F668, three sample sections of the PVC powdercoated fence shall be tested for bonding of the powder coat to the metal. Each test will consist of making two cuts parallel to the axis of the pipe or casting through the coating, approx. 1/16 inch (1.6mm) apart, at least 1/2 inch (12.7mm) long. With a knife, peel back a section of the coating between 1/8 inch (3.2 mm) and 1/4 inch (6.4 mm) long to produce a tab. Attempt to remove

the 1/16 inch (1.6 mm) strip of coating by pulling tab. The fence shall be deemed acceptable if the coating breaks rather than separates from the metal on all three samples.

Laboratory Test For TGIC-Polyester Powdercoating: At the discretion of the Engineer, a sample of the TGIC-Polyester powdercoated fence shall be laboratory tested for bonding of the powdercoating to the metal. Test shall be the Cross Hatch test per ASTM D3359, Method B. Failure to satisfactorily pass this test shall be a basis for rejection.

Touch-up & Repair: For minor damage caused by installation or transportation and field welded metal powder coated surfaces, clean welds, bolted connections, and abraded areas;

1. On damaged galvanized surfaces, apply organic zinc repair paint complying with ASTM A780. Galvanizing repair paint shall have 65 percent zinc by weight. Thickness of repair paint shall be not less than that required by ASTM A123.
2. On damaged powder coated surfaces, touch-up finish in conformance with manufacturer's recommendations. Provide touch-up such that repair is not visible from a distance of six feet (6').

ERECTION: The posts shall be set in holes which shall have been formed in the concrete curbs or footings, as shown on the plans or directed by the Engineer. After the posts have been set in place and properly supported to hold them to line and grade, the remaining space shall be neatly filled with a grout consisting of one (1) part of cement and two (2) parts sand. All dowels shall be pinned as shown on the drawings.

SUBMITTALS: All submittals shall be submitted in accordance with the requirements of the S-Pages.

Shop Drawings: Contractor shall submit shop drawings including complete details of fence construction, height, post spacing layout, dimensions, and concrete footing detail prior to manufacture.

Foundry Certificate: Where type 'A' or type 'C' is specified, a foundry certificate verifying authenticity of ductile iron supplied in this Item shall be submitted. Certificate shall be on foundry letterhead, dated and signed by Foundry President with Contract No., Contract Name, specific part(s) purchased, Contractor Name, and Class of Ductile Iron provided.

Certificate: Contractor to submit certification that material used complies with this specification.

Samples: Submit one twelve-inch (12") section of galvanized, powder coated pipe for approval.

MEASUREMENT AND PAYMENT: The quantity of pipe rail fence of each type to be paid for under this Item shall be the number of LINEAR FEET of fence, furnished and erected complete in accordance with the plans, specifications, and directions of the Engineer.

The price bid shall be a unit price per LINEAR FOOT of pipe rail fence of each type and shall include the cost of furnishing all labor, materials and equipment necessary to erect fence complete, including powder coating and powder coating touch-up and all incidental expenses necessary to complete the work in accordance with the plans and specifications to the satisfaction of the Engineer, except excavation and concrete which will be paid for separately under their respective Items.

Item No.	Item	Pay Unit
PK-ESCR 077	**PIPE RAIL FENCE TYPE B 2 RAIL**	**L.F.**
PK-ESCR 714	**PIPE RAIL FENCE TYPE B 3 RAIL**	**L.F.**

END OF SECTION

SECTION PK-ESCR 081 – CLAY STORAGE BOX

WORK: Under this item, the Contractor shall furnish and erect a CLAY STORAGE BOX in accordance with the plans and specifications and directions of the Engineer.

MATERIALS: All materials and methods of construction shall conform to the requirements of the NYCDOT Standard Highway Specifications

Lumber: All wood stakes and boards shall be manufactured of No. 1 common Douglas Fir or Yellow Pine. The stakes and boards shall be manufactured in accordance with the drawings. All exposed corners and faces shall be free from damage, dog holes, pike or cant holes.

Fastenings: All fasteners shall be hot-dipped galvanized or stainless steel.

PRESERVATIVE TREATMENT: Wood shall be seasoned, either by air-drying or kiln drying, and the moisture content prior to treatment shall be not more than 25%. Wood shall be treated to a net retention of .40 pounds per cubic foot with ACQ (ammoniacal copper quaternary), Copper Azole preservation, or approved equal. The preservative shall penetrate 2.5 inches or 85% of the sapwood. All details of treatment methods, quality, control and product testing shall be in accordance with the appropriate AWPA standards. In accordance with New York State Environmental Conservation Law section 37-109, CCA (chromated copper arsenate) treatment is prohibited as a wood preservative treatment material.

If any other preservative treatment is proposed, the Contractor shall submit documentation that such treatment conforms to the AWPA Standards for treatment of the wood for the intended use.

Posts shall be dried at least thirty days after treatment, prior to installation. All fabrication shall be performed prior to treatment. Where field cuts have to be made, the cut ends shall have two coats of concentrated preservative brushed on.

INSTALLATION: Clay Storage Box shall be constructed and installed according to the Contract Drawings, or as directed by the Engineer. Clay Storage Box location shall not interfere with the positive drainage of the field.

For stabilization during emplacement, a 2”x 4” (8’-6”) long wood board shall be nailed to the front of the clay storage box. After emplacement the 2” x 4” shall be removed from the front of the clay storage box.

SUBMITTALS: All submittals shall be in accordance with the requirements of the S-Pages.

Wood Treatment Affidavit: The Contractor shall provide at the Contractor’s own expense, a sworn affidavit as to the type, grade and quality of preservative treatment provided. The net final retention in pounds per cubic foot of wood impregnated shall conform to the requirements of the specifications.

Shop Drawings: The Contractor shall submit complete shop drawings indicating all dimensions and materials. Drawings must be approved by the Engineer prior to beginning construction.

MEASUREMENT AND PAYMENT: For furnishing and erecting Clay Storage Box complete in accordance with the plans and specifications and directions of the Engineer, the Contractor shall receive the unit price bid.

The price bid shall be a unit price for **EACH** Clay Storage Box and shall include the cost of all labor, materials, equipment and incidental expenses necessary to complete the work including unclassified excavation, pressure treated lumber and fastenings installed in accordance with the plans and specifications to the satisfaction of the Engineer.

Item No.	Item	Pay Unit
PK-ESCR 081	CLAY STORAGE BOX	EA

END OF SECTION

SECTION PK-ESCR 097 – PLAY EQUIPMENT – 10TH STREET

WORK: Under this item, the Contractor shall furnish and install all STEEL PLAY EQUIPMENT in accordance with the plans, specifications and directions of the Engineer. In addition, the Contractor shall furnish incidental materials to the Engineer, as specified under the heading INCIDENTAL MATERIALS.

NOTE: Final installation of the steel play equipment (concrete footings) shall not proceed until the Contractor has demonstrated to the satisfaction of the Engineer that the use zones comply with ASTM 1487-Latest Rev., and CPSC guidelines. The safety surfacing shall be installed as soon as possible after the play equipment installation is complete. The Contractor shall be responsible for temporarily barricading the Play Equipment prior to completion of the safety surfacing installation.

GENERAL: Play Equipment shall be as shown on the drawings. All play equipment shall be Powerscape® and Xscape®, as manufactured by Gametime, Fort Payne, AL; or PlayBooster® and Evos® as manufactured by Landscape Structures Inc., Delano, MN, or Metro Collection and Unity® Connect as manufactured by Playworld Systems, Lewisburg, PA, City Park Series® (Urban Playgrounds), as manufactured by Miracle Recreation Equipment, Monett, MO, or approved equal.

STANDARDS: All play equipment design and construction shall meet or exceed the requirements as published in the Handbook for Public Playground Safety issued by the U.S. Consumer Product Safety Commission, the Consumer Product Safety Improvement Act (CPSIA) of 2008, and ASTM Designation F1487-Latest Rev., "Standard Consumer Safety Performance Specification for Playground Equipment for Public Use." Play equipment design and construction shall also comply with "Guide to ADA Accessibility Guidelines for Play Areas", Final Ruling (ADA).

MATERIALS: Unless otherwise specified herein, all materials shall conform to applicable portions of shall meet the requirements of the NYCDOT Standard Highway Specifications

Footings: Concrete for footings shall be per Item ESCR-4.06 PF.

Steel Members:

Posts: Posts and vertical members shall be Schedule 40 pipe or Structural Steel tubing as specified below. Tubing for posts shall have a minimum thickness of 0.120" (11 gauge).

Railings and Fixtures: Railings and fixtures shall be schedule 40 pipe or structural tubing of such thickness that the railings shall not sag or bend during use. Any tubing that bends, sags or does not meet ASTM F1487-Latest Rev., Section 12.5 shall be replaced and upgraded by the manufacturer at no additional cost to the City.

Tubular Steel: Tubular steel shall be structural tubing of the sizes and shapes shown in the approved shop drawings. Steel shall meet the specifications for ASTM A500, Grade B which has a minimum tensile strength of 58,000 psi (for round and shaped) and a minimum yield point of 42,000 psi for round structural tubing and a minimum yield point of 46,000 psi for shaped structural tubing. Material shall be load-tested under ASTM 1487-Latest Rev., after fabrication.

Pipe: Pipe for climbers, ladders, shall be Schedule 40 or structural tubing steel pipe conforming to the requirements of ASTM A53 and shall be of the same sizes, indicated on the plans. Steel pipe shall be load tested under ASTM F1487-Latest Rev., requirements after fabrication. The outside diameter of all hand gripping components including rungs on horizontal ladders, climbing bars, handrails, etc. shall comply with the anthropometric dimensions as listed in the ASTM 1487-Latest Rev. standards.

Pipe Caps: All exposed ends of steel members shall be plugged with metal caps riveted in place with self-sealing rivets or spot welded.

Fittings and Clamps: All fittings and clamps shall be as indicated on the approved shop drawings and as may be required to complete the installation. All fittings shall be of the best quality malleable iron, drop-forged steel or steel plate as indicated. Clamp fittings shall be cast aluminum or 12 gauge drawn quality or better steel and finished to match vertical components and shall be smoothly constructed with no projections or sharp edges. All clamps shall have tamper resistant fasteners. Clamps used on component subjected to vertical loads shall be pinned to prevent slipping and twisting.

Fasteners: All fasteners including, but not limited to, bolts, lag screws, tie rods, threaded rods, nuts, and washers, shall be of the sizes indicated on the approved shop drawings. Fasteners shall be either stainless steel per ASTM F879 or carbon steel treated with a corrosion resistant coating per applicable ASTM plating specifications. All threaded fasteners shall include a locking patch-type material that will meet the minimum torque requirements of Industrial Fastener's Institute (IFI)-125 "Test Procedure for the Locking Ability Performance of Chemical Coated Lock Screws". The play equipment Manufacturer shall provide special tools for pinned tamperproof fasteners. All protruding bolts, screws and other threaded connectors shall be cut off to within two threads of nut, washer, etc., then satisfactorily peened to prevent removal by unscrewing, and filed completely smooth to remove all sharp edges.

Chain: Chain for climber shall be stainless steel, minimum size 7/32", 4/0 welded link chain.

Plastic Lumber: Plastic lumber shall be made from UV stabilized recycled high density polyethylene. Recycled lumber shall be protected during transportation. Unless otherwise specified, color shall be "Natural". Recycled plastic lumber may not be used on spans greater than two (2') feet unless additional structural support is provided. An engineering analysis of structural integrity based on ASTM F1487 shall be submitted upon request. Plastic Lumber shall be smooth on all sides and ends. Plastic Lumber shall be free from all but minor marks, blemishes, discolorations, warp, wane, twist, quirk or other imperfections. The intersection of all planes of faces, edges and ends shall be eased to one-eighth (1/8") inch radius.

Rotationally Molded Polyethylene: Parts shall be rotationally molded from color-compounded, first quality, linear low-density polyethylene with a tensile strength of 2,500 psi per ASTM D638 and with color and UV-stabilizing additives. Dry-blended or molded-in resins are not acceptable. Polyethylene shall be ultraviolet stabilized to UV-8 and have anti-static additives. Wall thickness shall vary by component and as shown on the approved shop drawings.

Sheet Plastic Parts: Sheet plastic parts shall be manufactured from three-quarter (3/4") inch high density polyethylene that has been specially formulated for optimum UV stability and color retention. Products shall have a minimum density of 0.933 G/cc in accordance with ASTM D1505 and a minimum tensile strength of 2,400 psi in accordance with ASTM D638. All edges shall be free of burrs, sharp edges, and points.

STEEL FABRICATION: All steel components to be welded shall be welded in complete accordance with the standards of the American Welding Society. All welds shall be continuous around the entire perimeter. All welds shall be ground smooth. NO TACK WELDING AND NO FIELD WELDING SHALL BE PERMITTED.

Corrosion Resistant Treatment: All fabrication and welding shall be completed prior to application of the corrosion resistant coating, metal pieces shall be cleaned of all weld spatter, mill scale, varnish, rust, grease, and the like and the surface mechanically and chemically prepared to receive the coating. This corrosion resistant coating shall a thermal spray zinc coating or electrostatic applied primer with a minimum thickness of 3 mils. All metal pieces, including welds, shall receive the coating.

Polyester Powder Coating: A surface coat shall be applied to the thermal zinc coated metal pieces in such a manner that the coating will not peel off. The manufacturer shall perform all processes required to achieve a smooth material bond. An epoxy or acrylic polymer primer shall be applied prior to application of powdercoating. The surface coat shall be an electrostatically sprayed, lead-free, superdurable TGIC (triglycidyl isocynanurate) polyester powder coating applied to a minimum of five(5) mil thickness which shall be oven cured. The TGIC polyester powder coating shall comply with the ASTM standards below:

PHYSICAL PROPERTIES	TEST METHODS	ACCEPTANCE CRITERIA
Adhesion cross hatching	D3359B	5B (0% area removed)
Flexibility conical mandrel	D522	Pass 3/8” mandrel
Pencil hardness	D3363	Pencil hardness 2H minimum
Impact resistance	D2794	80 inch pounds minimum
Overbake resistance- Adhesion	D2454	5B
Overbake resistance- Hardness	D2454	Pencil hardness 2H minimum
Overbake resistance- Direct Impact	D2454	80 inch pounds minimum
Humidity resistance-250 hours	D4585	No visible change to surface
Weatherability	D822	No visible change to surface
Salt Spray Resistance	B117	1000 Hours
Corrosion Resistance	D1654	Rating 6 or greater
UV Exposure	G154, 340 bulb	2,000 hours, rating delta E of 2 90 percent gloss retention

Colors shall be as shown on the drawings. (Submittals required). Material manufacturer’s directions for storage and use shall be adhered to. Material surfaces shall be protected during shipment so as to arrive mar and scratch free in the field.

SPECIFIED COMPONENTS AND ATTACHMENTS: All components and attachments used for the steel play equipment shall be validated by the IPEMA Third Party Process, or an approved equal third party validation process, to demonstrate compliance with ASTM F1487.

Steel Decks/Steps: Steel decks and steps shall consist of a single piece of low carbon, 12 gauge (0.105”) minimum thick sheet steel conforming to ASTM A1011. The steel sheet shall be perforated with a return flange formed on the perimeter to provide necessary reinforcement to

ensure structural integrity. Steel decks and steps shall be reinforced and cross-braced as necessary to prevent any noticeable deflection. Perforation shall be small enough to eliminate potential finger entrapment. Decks shall be flush with the outside edge of the supporting posts. There shall be no unsupported area larger than four (4 sf) square feet.

Decks and steps shall be coated with a hot dipped polyvinyl chloride (PVC) system or thermoplastic polyethylene coating with a gritty non-slip surface. Deck/Step surface must be slip resistant in both wet and dry conditions. The PVC coating shall have a hardness of Shore A 83 +/-5 normal durometer range. The material shall be classed as "Self Extinguishing", meets or exceeds DOT MVSS 302 or UL 94HB, and contains ultraviolet inhibitors to help prolong the life of the coating. The PVC coating shall meet all applicable phthalate levels as specified under CPSIA.

Plastic Lumber Decks. Plastic lumber decking shall be sized as shown on the drawings and shall be affixed to supporting members in a tamper resistant method with spacers as necessary to prevent potential pinching.

Safety Railings: Safety rails shall provide enclosure and shall have no gaps greater than 3.5" and less than 9". Tubing and pipe used for safety rails shall not exceed 1.54" in outer diameter and shall have corrosive protection and powder coating as specified above. All welds shall be complete and ground smooth. These requirements shall conform to ASTM F1487-Latest Rev. standards.

Tire Swing: Tire swing shall consist of an overhead beam, reinforcing insert, connector plates, automotive type universal joint assembly with protective rubber bellows or an universal joint assembly with bearings, swing chain, 'tire' type swing seat and all required hardware for assembly. 'Tire' type swing seat shall be designed and manufactured especially for playground use. Standard fiberglass and/or steel belted automobile tires are not acceptable. The 'tire' type swing seat shall have a twenty eight (28") inch minimum outer diameter and a fourteen (14") inch minimum inner diameter and shall be fitted with a reinforcing ring. Chain attachment area shall minimize the likelihood of fingers becoming caught. Drainage holes shall be provided in the underside of the tire.

Slides: Spiral and straight slides shall be constructed of either stainless steel or rotationally molded polyethylene as shown on the approved shop drawing. Rotationally molded polyethylene shall meet the specifications above. Stainless steel slides shall be constructed of 16 gauge or better stainless steel with a 2B finish. The underside of the stainless steel slide shall be constructed such that there are no projections or sharp or rough edges. Slide bed and enclosure shall conform to CPSC guidelines for spiral slides. The slide bed and sides shall be shaped and dimensioned such that the rider will not tip or slide over outside edge of the slide. Gaps between the slide and main support post are not acceptable. Gaps shall be closed through either mechanical fasteners, welding, or methods approved by the Engineer. Spiral slide chutes shall either installed by manufacturers factory trained certified installers, or completely assembled at the factory and shipped to site ready for field erection.

Flex Bridges: Flex Bridges shall be constructed with metal straps or steel reinforced rope/cable. Flex Bridges constructed with chains are not acceptable components under this specification.

Climbing Cable (Rope): Cable shall comprise of six-stranded and tempered steel reinforced rope. The galvanized steel wire cores of the six strands shall be inductively fused to the polyamide or polyester outer coating. The coating shall be abrasion-resistant and colorfast to ultraviolet degradation. The breaking strength of the cable shall exceed the applicable load applied to the net climber. The climbing cable net shall be completely factory assembled in a configuration that is ready for attachment to the frame on site.

Age Appropriate Signage: In accordance with CPSC Handbook for Public Playground Safety, Sections 2.2.5 and 2.2.6 and ASTM F1487, play equipment units shall have age appropriate signage in a clearly conspicuous place near or on the equipment platform at the entry point. This signage shall state one of the following: 1) "This play equipment is designed for Preschool Children Ages 2 to 5 years. Adult supervision is recommended"; or 2) "This play equipment is designed for School Age Children ages 5 to 12 years. Adult supervision is recommended". Unless otherwise shown on the Drawings, the sign shall be routed two color sheet plastic, or approved equal.

Manufacturer Identification Sticker: The play equipment shall have an identification sticker placed in an inconspicuous place on the equipment for NYCDPR M&O reference. (For example, under a slide bed at the lowest point). The sticker shall identify the manufacturer's address and a toll-free phone number.

QUALIFICATIONS: The entity who will perform the installation work shall be either a trained and certified installer by the specified play equipment manufacturer OR have a minimum of three (3) years of experience working on installation of play equipment similar to the work specified in scope and complexity in accordance with ASTM F1487-Latest Rev. and CPSC guidelines.

INSTALLATION: All play equipment shall be installed by a qualified installer, experienced in erecting steel play equipment and meeting the qualifications specified above. Final installation of the steel play equipment (concrete footings) shall not proceed until the Contractor has demonstrated to the satisfaction of Engineer that the use zones comply with ASTM F1487-Latest Rev. and CPSC guidelines.

Asphalt pavement shall be neatly saw-cut prior to excavation for footings. All tubular steel posts shall be set square and plumb in concrete footings as shown on the approved shop drawing to grade required assuring level installation of platform angle frames and rails. Footings shall have the top surface finished so as to provide sheet drainage away from steel uprights, level and free of surface fluctuations that could contribute to an uneven surface in overlying safety surfacing.

Equipment shall be assembled to configuration as shown on the approved shop drawings. All fastenings shall be made as shown on the drawings and shall be securely tightened with an impact and/or torque wrench (as per manufacturer's specification). The Contractor shall take precautions while trimming bolt projections, if necessary, to prevent metallic contamination (rust bloom) of the corrosion resistant bolts to the satisfaction of the Engineer. These precautions include the use of previously unused grinding wheels, and applying zinc rich paint on trimmed galvanized bolts. All work shall be done so that no hazardous projections or rust bloom shall be left in the finished work.

FIELD INSPECTION: An authorized manufacturer's representative, who is not the qualified installer, shall inspect and approve the installation of the play equipment prior to acceptance by the engineer. The play equipment representative shall certify that the play equipment was correctly installed in accordance with the manufacturer's written instructions, all fastenings are securely installed meeting the manufacturers' maximum torque value, and meeting all requirements set forth in ASTM F1487- Latest Rev. A Document of Acceptance shall be provided by the manufacturer's representative stating that a field inspection was conducted and the installation is accepted by the manufacturer's representative (See Submittals).

THIRD PARTY RESOLUTION: If a disagreement arises between the Engineer and the play equipment manufacturer regarding the safety of a particular play component, the Contractor shall

be directed to hire an independent Certified Playground Safety Inspector (CPSI), as part of the bid price of this item, to assess if the play equipment component complies with the safety standards referenced above. The Contractor shall submit the qualifications of the CPSI for approval by the Engineer prior to hiring. The independent CPSI shall inspect the play equipment on site and submit a final report detailing the determination of their inspection. If the play component is deemed to be unsafe by the independent CPSI, the Contractor shall make all necessary corrections at no additional cost to the City based on the CPSI's recommendation. If the Engineer wishes to modify a play component after the independent CPSI deemed it to be meeting all safety standards, all materials and methods necessary to perform the requested modification shall be eligible for a change order extra.

INCIDENTAL MATERIALS: The Contractor shall furnish and deliver, to the Engineer, incidental materials obtained from the approved play equipment manufacturer. Contractor shall also furnish to the Engineer any catalogs, invoices, statements, etc. for verification that a complete set of all maintenance and operations manuals, tools, extra paint, materials, etc. have been furnished. All furnished material shall be properly identified with the name of park and contract number. Incidental new materials shall include the following:

192 oz. - Graffiti Remover, for polyester powdercoated steel surfaces - One hundred ninety two (192) ounces in spray bottles: six (6) thirty two (32) ounce spray bottles; or twelve (12) sixteen (16) ounce spray bottles. Graffiti Remover shall be Go-Away graffiti remover, as manufactured by Nexgen, North Hollywood, CA; Erase Graffiti Cleaner as manufactured by Landscape Structures, Delano, MN; or Gametime Graffiti Remover as manufactured by Gametime, Fort Payne, AL, or approved equal. Each container shall be clearly labeled, using a minimum of 1/4-inch high lettering: "For Play Equipment".

90 oz. - Touch-Up Paint, complete for all color surfaces, as provided by manufacturer. Twenty (20) cans of custom spray paint 4.5 oz. each can or a minimum of 90 ounces of paint (total all colors) shall be provided.

1 (One) - Tools And Hardware Maintenance Repair Kit, complete with tool box, special tools for tamper proof fasteners, fastener wrench and hardware (nuts, bolts screws etc.), to be provided by manufacturer. The repair kit shall be clearly marked with the Contract Number and the Playground name. Marking shall be done with permanent magic marker or other method approved by the Engineer.

SUBMITTALS: All submittals shall be submitted and approved prior to manufacture and in accordance with the requirements of the S-Pages.

Shop Drawings: The Contractor shall submit shop drawings no later than three (3) months prior to the scheduled completion of the project. The shop drawings shall indicate as a minimum: the play equipment layout, the required minimum limits of the use zone, elevations, footings layout, and compliance with ADA requirements including access details and the ratio of elevated versus ground level events. The shop drawings shall show the distance in linear feet from outside edge of the safety surfacing to a minimum of three (3) closest adjacent fixed outside structures such as curbs, fences, benches or trees. The Contractor shall submit the following information if required by the Engineer: materials, finishes, supports, hardware, fastener torque schedule, fittings and accessories.

Qualifications: The Contractor shall submit play equipment installer qualifications as specified above for approval prior to installation of play equipment.

Deviations From Layout: Any deviations from the contract drawings must be submitted for review and approval by the Engineer.

Color Samples: Color samples shall be submitted for approval by the Engineer before any powder coating is done.

Document of Acceptance: An authorized representative of the play equipment manufacturer must inspect and approve the completed installation. The play equipment will not be accepted by the play equipment manufacturer or the Engineer until they are satisfied with the installation. No additional compensation will be given for any necessary corrective work. A Document of Acceptance signed by the authorized Manufacturers' representative must be submitted to the Engineer before the final 20% payment is made to the Contractor for this item.

Third Party Resolution: If arbitration is required, the Contractor shall submit qualifications for the independent CPSI for approval prior to hiring. The Contractor shall also submit a final report prepared by the independent CPSI detailing the result of the inspection.

Insurance Certificate: The Contractor shall furnish the Manufacturer's Certificate of Product Liability Insurance for one (1) million dollars.

Warranty: The manufacturer shall warranty replacement of any items or components found to be defective during the manufacturers' warranty period. The Contractor must submit the original guarantee certificate to the Engineer at the completion of the project. The Contractor shall furnish the original and 4 (four) copies of the manufacturers' warranty.

Manual: One (1) copy of the Installation and Maintenance (or Owner Information) manual complete, as provided by manufacturer.

MEASUREMENT AND PAYMENT: For furnishing and installing all PLAY EQUIPMENT AT 10th STREET in accordance with the plans, approved shop drawings, specifications and directions of the Engineer, the Contractor shall receive the **LUMP SUM** price bid.

The price bid shall be a **LUMP SUM** for all steel play equipment and shall include the cost of all labor, materials, equipment and incidentals necessary to complete the work, including unclassified excavation, concrete footings, the cost of hiring of an independent CPSI, if required, and all submittals, in accordance with the plans, approved shop drawings and specifications, to the satisfaction of the Engineer.

Upon submission and approval of the required shop drawings the Contractor shall receive three (3%) percent of the total bid price. Partial payment for stored materials may be granted in accordance with NYCDOT Standard Highway Specifications, **Section 1.06.35**. Twenty (20%) percent of the total bid price for this Item shall be withheld until the insurance certificate and Document Of Acceptance have been submitted.

In addition, the Contractor shall deliver INCIDENTAL MATERIALS as outlined above to the Engineer. No additional payment shall be made for incidental materials. Contractor shall include cost in the bid price.

Item No.	**Item**	**Pay Unit**
PK-ESCR 097	**PLAY EQUIPMENT – 10th STREET**	**L.S.**

END OF SECTION

SECTION PK-ESCR 103 – SIGNAGE AND WAYFINDING (BIKEWAY)

PK-ESCR 103.1 WORK: Under this Item, the Contractor shall furnish and install signs, in accordance with the plans and as directed by the Engineer.

PK-ESCR 103.2 MATERIALS: All signs shall conform to all applicable City, State and Federal Highway regulations.

Signs shall be weather-resistant, and following cleaning shall show no appreciable discoloration, cracking, blistering, or dimensional change, and retain not less than 80% of the specified minimum brightness values when exposed to accelerated weathering in accordance with ASTM D822-60.

Signs shall be made of thermally stabilized aluminum alloy sign blank .080" thickness, powder coated white. Each sign blank shall be cut from one piece of aluminum, and shall be free from wind, buckle, dents or twist. Welded or jointed sign blanks will not be accepted.

The face shall be substantially a plane surface. Surface finish shall be smooth, free of mill marks or other imperfections. All edges shall be filed or ground smooth, leaving the entire blank free from sharp edges and burrs. All corners shall be rounded with one half (1/2") inch radius corner or as indicated on the plans.

All signs shall be punched with three-eighths (3/8") inch diameter brackets and the heads of exposed fasteners shall match sign color specified. Mounting hardware shall be fully concealed except as approved by the Engineer. Attachment and installation methods shall be in accordance with best practices using devices and fasteners to suit the conditions of the surface to receive the installation.

All fasteners and hardware shall be vandal-proof.

For all types of signs used to convey "cautionary" messages, as defined by the Manual on Uniform Traffic Control Devices (MUTCD), shall be yellow/gold color with one-half (1/2") inch white border all around.

A. Horizontal Sign Clearance: Horizontal sign clearance shall be as shown on the plans and in accordance with the following manuals.

B. Vertical Sign Clearance: Vertical sign clearance shall be as shown on the plans and in accordance with the following manuals.

C. Sign Face Layout: Sign face layout shall be as shown on the plans and in accordance with the following manuals.

1. The AASHTO Manual for Signing and Pavement Marking of the National System of Interstate and Defense Highways, latest edition including revisions and interpretations.
2. Manual of Uniform Traffic Control Devices for Streets and Highways, latest edition.
3. New York State Manual of Uniform Traffic Control Devices, latest edition.

PK-ESCR 103.3 INSTALLATION: Ground mounted signs shall normally be erected so that the sign face is truly vertical and the intersection angle measured between the sign face and the centerline of the travel lane which the sign serves shall be 93 degrees. Where lanes divide or on curves, sign faces shall be oriented so as to be most effective both day and night, and to avoid the possibility of specular reflection.

The erection of the sign shall include all work necessary to secure the signs in the prescribed positions on the supports including the installation of clamps and brackets; the attachment of signs to the supports; any work necessary to locate the signs in the prescribed locations; the supplying of bolts, nuts, clamps, brackets, strapping, and other necessary appurtenances, as indicated on the plans, or as directed by the Engineer.

Sign Installation Method I: Method I shall be used for the installation of sign or sign assembly mounted on "EL" columns, street light posts, traffic signal posts, etc. Method I shall use a *Plus 4* stainless steel flared leg sign bracket or a *Minus 4* stainless steel straight leg sign bracket per NYC DOT standards.

Sign Installation Method II: Method II shall be used for the installation of sign or sign assembly edge mounted on sign post of the steel rail type. Method II shall use machine bolt, cadmium-plated 5/16-18NC, 2" x ¾" hexhead, ½" across flats and elastic stop nuts cadmium-plated 5/16-18T, 9/16" across flats. Two machine bolts and nuts shall be used for each sign mounted on sign post of the steel rail type.

Installation of Sign on Sign Post: Installation of sign on a sign post of the steel rail type comprises the attachment of appropriate sign by Method II. The work shall be done so that the sign faces are plumb and at a 45 degree angle with the curb facing the direction of traffic with the bottom of sign at seven (7') feet from finished grade.

Installation of Sign on "EL" Column, Lamppost, Traffic Signal, Etc.: Installation of sign on "EL" column, lamppost, traffic signal, wood pole, etc. comprises the attachment of appropriate sign by Method I in accordance with the contract documents. The work shall be done so that the sign faces are plumb and at a 45 degree angle with the curb, facing the direction of traffic with the bottom of sign at seven (7') feet from finished grade.

Sample Installations: The Contractor shall install at least one sample of each typical sign for approval. Upon such approval, they shall form the standard for the installation of all signage included in this contract.

Sign Locations: Prior to installation, the Contractor shall stake out the locations of all signs as shown on the plans. The Contractor shall verify sign locations with the Engineer prior to installation.

PK-ESCR 103.4 SUBMITTALS: The Contractor must submit the following to the Engineer for approval:

1. Shop drawings to include, but not be limited to, layout of sign fabrication showing sizes and shapes of members.
2. Production prototype samples of graphics. Submit all camera-ready proofs of typography, symbols and/or graphics prior to making screens or patterns for approval.
3. Samples of all materials and products, color samples, and all finishes shall be submitted for approval prior to fabrication.
4. A finished sample of each type of sign for approval prior to fabrication of all signs.
5. Two (2) samples each of the stainless steel strap and the two (2) piece sign bracket.

PK-ESCR 103.5 MEASUREMENT AND PAYMENT: The quantity of **SIGNAGE AND WAYFINDING (BIKEWAY)** shall be the number of **SQUARE FEET** of sign provided and installed (measured on one side only) in accordance with the plans, specifications, and directions of the Engineer.

Item No.	Item	Pay Unit
PK-ESCR 103	**SIGNAGE AND WAYFINDING (BIKEWAY)**	**SF**

END OF SECTION

SECTION PK-ESCR 105 – THERMOPLASTIC EXTRUDED LINES

WORK: Under this item, the Contractor shall furnish and apply hot extruded reflectorized **THERMOPLASTIC EXTRUDED LINE 4" WIDTH (WHITE/YELLOW)** to define lanes and center lines all in accordance with the plans, specifications, directions, and approval of the Engineer, MUTCD and NYCDOT.

INTENT: It is the intent of this item to pay for thermoplastic extruded white or yellow lines four (4") inches width in any quantity.

MATERIAL: The markings shall be a thermoplastic compound which is hot extruded directly onto the pavement, and shall contain a minimum of 20% glass beads as part of the aggregate in the material to act as the basic reflective material. Color of lines to be as indicated on the plans.

The thermoplastic material shall be 100% virgin stock, using no reprocessed materials. Pigments, beads and filler shall be uniformly dispersed in the resin. The material shall be free of all skins, dirt and foreign materials.

Immediate reflectance shall be supplied by dropping additional glass beads upon the line during application at a rate of 6 lbs. per 100 sq. ft.

The manufacturer has the option of formulating the thermoplastic material according to the manufacturer's own specifications. However, the manufacturer shall meet the minimum requirements specified herein, including but not limited to; composition, physical characteristics, etc. The physical and chemical properties contained in this specification shall apply regardless of the type of formulation used.

The Contractor shall furnish a laboratory report of the material, consisting of the following tests:

1.	Color Retention	ASTM D620-57
2.	Indentation	ASTM D2240-68
3.	Flexibility	ASTM D747
4.	Binder Content	ASTM D4797
5.	Titanium Dioxide Content X-Ray Fluorescence	ASTM D476 - Type 2
6.	Glass Beads	ASTM D1155

The following physical specifications shall be strictly adhered to:

(a) Color

(1) White: Initially white: as demonstrated by a standard color difference meter such as the Gardner Color Difference Meter. The material shall show a deviation from a Magnesium Oxide standard not greater than the following: Reflectance (RD) 70min.

(2) Yellow: Yellow color shall reasonably match color chip numbers 13538 of Federal Standard number 595 and be lead free.

Color Characteristics: The thermoplastic material without glass beads shall meet the following:

White: Daylight reflectance at 45 degree / 0 degree of 80% minimum.

Yellow: Daylight reflectance at 45 degree / 0 degree of 45% minimum.

(b) Color Retention:

The retention of the initial color shall be determined as follows:

Specimens shall be prepared and tested from samples submitted in accordance with ASTM designation D620-57T, "Tentative method of test for color fastness of plastic; Ultra Violet Light and Condensate Exposure, ASTM G53, 300 hours total, alternate 4 hours condensate exposure at 40 deg.C, 4 hours UV exposure at 60 deg. C.

(c) Indentation Resistance

The reading of the shore durometer, Type A2, as described in ASTM designation D2240-68, after fifteen seconds shall not be less than 95 when the material is tested after heating for four hours at 400 deg. F, and cooled at 75 deg. F.

(d) Cracking Resistance

At low temperatures after heating the thermoplastic material for 4 hours at 218 deg.C (425 deg.F), applied and cooled to -9.4 +/-1.7 deg.C (15 +/-3 deg.F) the thermoplastic material shall show no sign of cracking or chipping.

(e) Glass beads

The glass spheres shall be colorless, clean, transparent, free from milkiness or excessive air bubbles and essentially clean from surface scarring or scratching. They shall be spherical in shape and at least 70% of the glass beads shall be true spheres when tested in accordance with ASTM D1155.

The refractive index of the spheres shall be a minimum of 1.50 as determined by the liquid immersion method at 25 deg.C.

(f) General Characteristics

The thermoplastic material shall be readily applicable at temperatures between 400 & 450 deg.F from the approved equipment to produce lines and symbols of the required thickness as described in the contract document.

The thermoplastic material shall not deteriorate or discolor when held at the application temperature for periods of time up to 4 hours or upon repeated reheating (a minimum of 4 times). The color, viscosity, and chemical properties versus temperature characteristics of the thermoplastic material shall remain constant for up 4 hours at the application temperature and shall be the same from batch to batch.

The compound shall not deteriorate by contact with sodium chloride, calcium chloride, or other chemicals used against formation of ice on roadways or streets, or because of the oil content of pavement materials, or from oil droppings from traffic. Deposits of dirt, tar, road material, tires, or other foreign material shall not adhere to the installed line. The line shall not blacken or discolor after vehicles pass over the line.

(g) Other Requirements

Thermoplastic material shall not emit fumes that are toxic or injurious to persons or property when it is heated to application temperature. The material shall not emit excessive smoke during heating or application.

STRIPING MACHINE: The required lines shall be installed with a striping machine, (also known as a hand liner) of a type approved by the Engineer The line shall be installed by making one pass over the designated length, and producing a continuous, well-defined line 4" or 8" in width, not less than 3/32 inches in thickness, and uniform in cross-section. The end of the line shall be a straight edge. The machine shall be capable of installing an acceptable line over existing thermoplastic lines, and on roadway surfaces existing in the City of New York.

INSTALLATION

The Contractor will be required to spot and install the lines in accordance with NYCDOT Bureau of Traffic Operations and any other details or information to be provided by the Engineer.

Plastic material is not to be applied below +50 deg. F, or on wet pavements, or during periods of high humidity, except with special permission of the Engineer. Before proceeding to mark any line, the Contractor shall clean the area of the surface to be marked, and make certain that the pavement is free of dirt, foreign material, oil, etc.

On pre-existing pavements, the installer shall pre-warm the pavement prior to placing markings, per the manufacturer's instructions.

The work included herein shall be done in a neat, professional manner, pleasing to the eye, and shall be kept straight so far as total alignment is concerned. To assure alignment, the Contractor shall snap guidelines. Spotting, spilling, or other marking of the roadway with marking material will not be tolerated, especially if due to carelessness or lack of skill on the part of the Contractor, and must be removed by the Contractor. The line or portion thereof shall be protected from both vehicular and pedestrian traffic by use of adequate warning devices as mentioned hereinbefore, until thoroughly past the point of tracking or smearing.

When raised reflective pavement markers exist, special care shall be taken to prevent the reflector from being covered by the thermoplastic material. Any reflectors so damaged shall be replaced by the Contractor at no cost to the City.

The Engineer's decision as to the acceptability of any installed line shall be final and binding on all parties to the contract. The Engineer may, at the Engineer's discretion, require the Contractor to remove all extraneous marks on the pavement made by the agents or employees of the Contractor, or made by others due to improper control or protection of the line by the Contractor, the Contractor's agents or employees. Any lines, or group of lines which, in the opinion of the Engineer, are not acceptable, whether by reason of poor workmanship, poor appearance, poor performance, poor materials, improper width or improper alignment shall be reworked by the Contractor at no cost to the City to the satisfaction of the Engineer, within fifteen (15) days after written notification of the rejection of such completed work is received.

DESCRIPTION:

Lane and Center Lines: Shall be four (4") inch wide. Cross walk lines shall be as required by NYCDOT or to match existing lines.

SUBMITTALS:

All submittals shall be in accordance with the requirements of the S-Pages and be submitted prior to manufacture.

Samples: The Contractor shall submit two eight inch (8") by twelve inch (12") extruded samples of material to be used in this contract. One sample shall contain surface beads, the other without surface beads.

MEASUREMENT AND PAYMENT: The quantity of **THERMOPLASTIC EXTRUDED LINE 4" WIDTH** to be paid for under this item shall be the number of **LINEAR FEET** of lines, painted in accordance with the plans, specifications and directions of the Engineer. Payment for lines other than 4" wide will be based upon the equivalent of four inch lines, (for example, an eight inch line would be paid at two linear feet for each one foot of line).

The price bid shall be a unit price per **LINEAR FOOT** and shall include the cost of all labor, materials and equipment, and incidentals necessary to complete the work in accordance with the plans and specifications to the satisfaction of the Engineer.

Item No.	Item	Pay Unit
PK-ESCR 105	THERMOPLASTIC EXTRUDED LINE 4" WIDTH	L.F.

END OF SECTION

SECTION PK-ESCR 106 – THERMOPLASTIC HFPRM LINES, SYMBOLS

WORK: Under the items the Contractor shall furnish and install various Thermoplastic Heat Fused Preformed Reflective Markings, (hereafter known as Thermoplastic HFPRM) of various types in accordance with the plans, specifications and directions of the Engineer. The markings include symbols and word messages.

DESCRIPTION: Typical symbols and word messages are shown on the plans. Markings shall include, but not be limited to the following word messages and symbols:

Word Messages: Shall be white and include, but not be limited to: PED ONLY, SLOW, CAUTION.

New York City DOT Designations: The following codes are the applicable NYC DOT codes for the respective symbols:

Bicycle Lane Arrow:	MG-550
Designated Bicycle Lane Symbol-Class II:	MG-532
Bicycle Trail Symbol-Class I:	MG-533
In-Line Skater Symbol:	MG-551
Pedestrian Symbol:	MG-549

MATERIAL: The Preformed Markings shall be capable of adhering to asphaltic concrete and cement concrete pavements by means of heat fusion. Adhesives, primers or sealers shall not be used prior to the preformed markings application on pavements. They shall be very durable, oil and grease impervious and provide immediate and continuing retroreflectivity. Hot tape products are not acceptable. Preformed markings shall be similar to PreMark with ViziGrip as manufactured by Ennis-Flint, Thomasville, NC, Crown Technology, LLC, Woodbury, GA or approved equal.

The Preformed Marking material shall consist of a resilient white, green and yellow polymer thermoplastic with uniformly distributed glass beads throughout its entire cross section, and shall conform to the current edition of the Manual of Uniform Traffic Control Devices for Streets and Highways as issued by the U.S.A. Federal Highway Administration.

The preformed markings shall conform to pavement contours, breaks and faults through the action of traffic at normal pavement temperatures. The markings shall have resealing characteristics and be capable of fusing to itself and previously applied worn hydrocarbon and/or alkyd thermoplastic pavement markings.

The Preformed Markings shall be capable of application on new, dense and open graded asphalt concrete wearing courses during the paving operation in accordance with the manufacturer's instructions. After application, the markings shall be immediately ready for traffic. The preformed markings shall be suitable for use for one (1) year after the date of receipt when stored in accordance with the manufacturer's recommendations.

The Preformed Markings shall not be brittle and must be sufficiently cohesive and flexible at temperatures exceeding 50 degrees °F for one person to carry without the danger of fracturing the material prior to application. They shall be highly durable retroreflective pliant polymer thermoplastic materials designed for transverse, longitudinal, legend and symbol markings subjected to high urban traffic volumes and particularly severe wear conditions such as repeated shear action from crossover or encroachment on typical configurations such as crosswalks, edge lines and lane lines.

Composition: The markings shall consist of a homogeneous mixture of high quality polymeric thermoplastic binders, pigments, fillers and glass beads. The thermoplastic material must conform to AASHTO designation M249-79(86) with the exception of the relevant differences due to the material being preformed. They shall contain a minimum of 30% glass spheres which shall conform to AASHTO M247-81 Type 1, except that glass spheres shall have a minimum of 70% true spheres on each sieve and 80% trues spheres overall. The glass beads must be homogeneously blended throughout the material with a securely bonded protruding exposed layer of beads that provide immediate and continuous retroreflectivity; no additional glass beads shall be dropped on the material during application. Curved arrows must be available without protruding glass beads if reversibility is needed.

Retroreflectivity: The preformed markings shall, upon application, exhibit uniform adequate nighttime retroreflectivity. At 86 degree 30' incidence angle and 1degree 30' divergence angle, the markings shall have average minimum intensities of 350 millicandelas for white and 175 millicandelas for yellow as measured with a Mirolux retroreflectometer.

Color Characteristics: The thermoplastic material without glass beads shall meet the following:

White: Daylight reflectance at 45 degree/ 0 degree of 80% minimum.

Yellow: Daylight reflectance at 45 degree/ 0 degree of 45% minimum.

The daylight reflectance shall not change significantly when the preformed thermoplastic is properly applied to the roadway surface. Yellow material shall not degrade when exposed to heat placed by appliance torch.

For highway use, the white markings shall contain a minimum of 8% by weight of Titanium Dioxide pigment. Yellow color shall reasonably match color chip number 13538 of Federal Standard number 595 and be lead free.

Green shall be American Reflective Products- (Magna code #912-1), or approved equal.

Skid Resistance: The surface of the preformed thermoplastic markings shall provide a minimum skid resistance value of 55BPN when tested according to ASTM E303-74.

Thickness: The width of the supplied material shall have a minimum average thickness of .090 inch (2.3mm), (Expressed as 90 mils), except for lanes markings and symbols for Park paths which shall be 60 mils.

Tensile Strength and Elongation: The preformed thermoplastic film shall have a minimum tensile strength of 150 lbs. per square inch of cross section, at 90 mil (2.3mm) thickness, when tested according to ASTM-D-638-76 except that a sample 6" by 1" shall be tested at a temperature between 70 degrees °F and 80 degrees °F using a jaw speed of 10" to 12" per minute. The sample shall have a maximum elongation of 20% at break when tested by this method.

Environmental Resistance: The applied markings shall be resistant to deterioration due to exposure to sunlight, water, oil, diesel fuels, gasoline, pavement oil content, salt and adverse weather conditions.

Effective Performance Life: When properly applied, in accordance with manufacturer’s instructions, the pavement markings shall be neat and durable. The markings shall remain retroreflective and show no fading, lifting, shrinkage, tearing, roll back or other signs of poor adhesion and shall not dissolve or smear after rubbing a small amount of motor oil on a small piece of preformed thermoplastic for two (2) minutes.

INSTALLATION: The markings shall be applied in strict accordance with the manufacturer's recommendations on clean and dry surfaces. New concrete surfaces must be sandblasted to entirely remove curing compound. No additional payment will be made for said sandblasting, the cost therefore shall be considered part of the price bid for this item.

Marking configuration shall be in accordance with the "Manual on Uniform Traffic Control Devices".

The work included under this item shall be done in a neat, professional manner, pleasing to the eye, and shall be kept straight so far as total alignment is concerned. To ensure alignment, the Contractor shall snap guidelines. Spotting, spilling, or other marking of the roadway with marking material will not be tolerated, especially if due to carelessness or lack of skill on the part of the Contractor, and must be removed by the Contractor.

SUBMITTALS: All submittals shall be in accordance with the requirements of the S-Pages.

Samples: The Contractor shall submit the following for approval:

One four inch (4") by four inch (4") sample of the HFPRM material along with manufacturers specification clearly illustrating that product meets the minimum skid resistance requirements.

One drawing, at a reasonable scale, of each symbol to be used in this contract.

One drawing of a typical letter to be used in this contract.

MEASUREMENT AND PAYMENT: The quantity of **THERMOPLASTIC HFPRM LINES, SYMBOLS** to be paid for under this item shall be the number of **EACH** type furnished and installed complete in accordance with plans and specifications and directions of the Engineer.

For furnishing and installing **THERMOPLASTIC HFPRM-WORD MESSAGES**, the Contractor shall be paid for **EACH** letter of word message furnished and installed in accordance with the plans, specifications and directions of the Engineer.

The prices bid shall be a unit price for **EACH** Arrow or Symbol and **EACH** letter included in each word message and shall include the cost of all labor, material and equipment necessary, including preparing pavements for application, and all incidental expenses necessary to complete the work in accordance with the plans, specifications and directions of the Engineer.

Lane and Center lines (where shown on the drawings) shall be paid under the item "Thermoplastic Extruded line-4" Width".

Item No.	Item	Pay Unit
PK-ESCR 106	THERMOPLASTIC HFPRM LINES, SYMBOLS	EA

END OF SECTION

SECTION PK-ESCR 109 – SOD NEW LAWN

WORK: Under this Item, the Contractor shall furnish and install **SOD NEW LAWN** areas including preparation of sod bed and shall maintain new lawn areas in accordance with the plans, specifications, and directions of the Engineer.

INTENT: This specification is intended for rototilling and sodding new lawn of any size on either new or existing topsoil.

MATERIALS:

Sod: The approved Sod is superior sod grown from high quality seed of known origin. Seed is to be inspected by a Certification Agency to assure satisfactory genetic identity and purity, overall high quality, and freedom from noxious weeds at time of harvest.

The blend/mix of grass in sod shall meet the specifications set below and shall be harvested from one field to ensure a uniform color and texture. Percentages of each grass type by weight are to be within the given range for that type:

65%-85%	TALL FESCUE - One or more of the following varieties: Apache II, Arid3, Conchise III,Coronado Gold, Falcon IV, Jaguar III, Lancer (SH), Masterpiece, Rebel IV, Rebel Jr.(SH), Rebel Sentry, Rembrandt, Tomahawk E+, RTF or approved equal.
15%-25%	BLUEGRASS - One or more of the following varieties: Able I (SH), Blacksburg, Glade (SH), Moonlight, Midnight, America (SH), Brilliant, Ram (SH), Touchdown (SH), Warren's A-34 (SH), Bristol (SH), Lofts 1757 (SH) or approved equal.
0 - 10%	PERENNIAL RYEGRASS - One or more of the following varieties: Brightstar II, Manhattan 4, Citation Fore, Elfkin, or approved equal.

NOTE: The cultivars followed by "(SH)" exhibit better shade tolerance than other varieties, under moderate shade. Sod shall be machine cut to a uniform soil thickness of five-eighth inch (5/8"), plus or minus one-quarter inch (1/4") at the time of cutting. Measurement for thickness shall exclude top growth and thatch.

Individual pieces of sod shall be cut eighteen inches (18") wide by sixty inches (60") long (7 1/2 sq.ft.) or rolls four feet (4') wide by fifty feet (50') long (200 sq.ft.). Standard sections of sod shall be strong enough to support their own weight and retain their size and shape when suspended vertically. Sod shall not be harvested or transplanted when moisture content may adversely affect its survival.

Sod shall be harvested, delivered, and transplanted within a period of thirty six (36) hours. Before cutting, Sod shall be mowed uniformly at a height of one and one-half inches (1 1/2"). The Engineer may inspect the Sod before it is harvested, but reserves the right to reject, on or after delivery, any Sod which, in their opinion, does not meet with the specifications.

When sod is delivered with monofilament (plastic or similar) backing, the backing shall be removed after rolling out the sod and discarded in an approved manner.

Ground Limestone: (Calcium Carbonate) shall have the following analysis: at least fifty percent (50%) shall pass a 200 mesh sieve; at least ninety percent (90%) shall pass a 100 mesh sieve; and one hundred percent (100%) shall pass a 10 mesh sieve. Total carbonates shall not be less than eighty (80) percent or 44.8% Calcium oxide equivalent. Pelleted limestone may be substituted at the discretion of the Engineer, when wind conditions exceed five (5) miles per hour.

The Contractor shall, at the direction and discretion of the Engineer, furnish a certified report of chemical analysis of representative samples of the Limestone which he proposes to use. All samples are to be taken by the Engineer and delivered to the laboratory: the price bid shall include inspection and laboratory charges. Limestone shall not be delivered until samples have been approved by the Engineer, but such approval does not constitute acceptance of the material. The Engineer reserves the right to reject on or after delivery any material which does not, in the Engineer's opinion, meet these specifications.

All limestone shall be delivered in standard size bags of the manufacturer showing weight, analysis, and name of the manufacturer. It shall be stored in such a manner that its effectiveness will not be impaired, as directed by the Engineer.

The rate of application of limestone per thousand (1,000) square feet shall be as follows, depending on the Hydrogen Ion concentration (pH) shown by a pH test (pH test to be provided by the Contractor at no additional cost to the City).

pH	**RATE (LBS.)**
Below 5.0	160
5.0 to 6.0	80
Over 6.0	0

Commercial Fertilizer Low Phosphorus (Slow Release): shall have the following composition by weight: Nitrogen (N) shall be min. 4% - max. 10%, of which min. of 50% is slow-release; available Phosphorus (P) shall be 0.67% or less (unless soil test indicates a need for additional phosphorus); and soluble Potash (K) shall be min. 4% - max. 12%.

Fertilizer shall be a pesticide free (no weed-and-feed) product such as Safer Ringer Lawn Restore II 10-0-6 as manufactured by Woodstream corp., Lifitz, PA; "Healthy Turf (8-1-9)" as manufactured by Plant Health Care, Inc., Pittsburgh, PA; Nutrients Plus (7-2-12) as manufactured by Nutrients Plus, Virginia Beach, VA; or approved equal.

All Commercial Fertilizer Low Phosphorus (Slow Release) shall be delivered in standard size bags of the manufacturer, showing weight, analysis, and name of manufacturer. It shall be stored as directed by the Engineer in such a manner that its effectiveness will not be impaired.

Application of any fertilizer on lawns or non-agricultural turf within 20 feet of a water body or on paved surfaces is restricted and may not be applied unless there is a buffer at least 10 feet wide of planted or naturally occurring vegetation, such as shrubs, trees and plants between the area receiving fertilizer and the water. Fertilizer shall not be applied between December 1 and April 1.

The rate of application: Two (2) applications of acceptable commercial fertilizer shall be applied by machine, each application at the rate of ten (10) pounds per 1,000 square feet or as recommended by the manufacturer. The first application shall be made at the time installation of Sod as specified.

The second application shall be made approximately six (6) months after the first application. This treatment shall take place during the next appropriate fertilizing season, the following Spring or Fall, and shall be subject to the direction of the Engineer.

The second application shall be applied to the surface only. Incorporation shall be achieved by thoroughly watering the entire area after application. The Contractor shall provide all labor and materials, including water, if not available from NYC sources.

PREPARATION OF SOD BED: Before any sod is placed, all areas to receive sod shall be thoroughly loosened with a rototiller to a depth of six inches (6"). All sticks, stones, roots, vegetation, or other objectionable material which might interfere with the formation of a finely pulverized sod bed shall be removed from the soil and a smooth uniform surface grade shall be established. Hollows, depressions, and gullies shall be filled by raking to level and topsoil added as necessary to provide a smooth surface prior to sodding. Topsoil shall be spread over the area to receive sod to the depth indicated on the drawings and as required to achieve the designated finished grade.

Compost (where required, paid separately): shall be thoroughly incorporated into the top five inches (5") of soil, where sod will be installed on existing topsoil and where soil testing indicates low levels of organic matter. Where required, the compost shall be spread at the rate of one (1) cubic yard per one thousand (1,000) square feet unless otherwise directed by the Engineer. Where seed will be installed on new topsoil, compost shall not be added.

Amendments: After the compost has been incorporated into the existing soil, limestone (where required) and Commercial Fertilizer Low Phosphorous (Slow Release) shall be worked into the top three inches (3") of soil as directed by the Engineer.

All amendments must be submitted for approval, see SUBMITTALS: The Contractor shall notify the the Engineer three (3) days prior to application of amendments.

INSTALLATION: All areas to receive sod shall then be compacted using a two hundred pound (200 lb.) roller. The area shall then be thoroughly watered prior to the placement of Sod. After drying out sufficiently, the area shall be considered ready to receive the sod.

Sod is not to be delivered or placed in a frozen condition. Sod shall be harvested, delivered, and installed within a period of thirty six (36) hours. No sod shall be harvested, delivered, or placed when, in the opinion of the Engineer, high temperatures may adversely affect the survival of the Sod.

The first row of sod shall be laid in a straight line with subsequent rows placed parallel to and tightly against each other. Lateral joints shall be staggered, each piece butted close together with no voids between the pieces. Care shall be exercised to ensure that the sod is not stretched or overlapped. Where mechanical equipment is used to lay sod, flotation tires are to be used. The sod shall be rolled immediately after placement and then thoroughly watered.

Sod shall be laid a minimum of four (4) weeks prior to the Substantial Completion date to allow the sod to thoroughly knit before being turned over to the City. All dead sod shall be replaced prior to the Substantial Completion. All extra sod and/or plant debris remaining from the preparation procedure shall be removed from the site. The Contractor shall be liable for any damage to property caused by their sodding operations. All areas and construction disturbed shall be restored to their original condition, to the satisfaction of the Engineer.

WATERING AND MAINTENANCE: The Contractor shall maintain all sodded areas until Substantial Completion of the contract. The Contractor shall properly water as required to maintain optimum growing conditions for the new stand of grass until Substantial Completion. Where water is supplied from City hydrants, the Contractor shall obtain a hydrant permit from the Department of Environmental Protection. The Contractor is responsible for keeping the permits current. The permits are available from each borough office. To obtain a permit, the Contractor should bring a copy of their contract with a general description of the hydrant location(s) they propose to access. The addresses of borough offices are:

Manhattan: 1250 Broadway (8th floor)

Brooklyn: 250 Livingston St. (8th floor)

Bronx: 1932 Arthur Avenue (6th floor)

Queens: 96-05 Horace Harding Ex., Corona

Staten Island: 60 Bay St (6th floor)

If water is not available from NYC sources, the Contractor is responsible for supplying water from their own source.

In absence of adequate rainfall, watering shall be performed daily or as often as necessary and in sufficient quantities to maintain moist soil to a depth of at least four (4") inches. Watering shall be done during the heat of the day to prevent wilting.

The first mowing shall not be attempted until the Sod is firmly rooted and secure in place. Not more than forty percent (40%) of the grass leaf shall be removed by mowing. The grass height shall be maintained between one and one-half inches (1 1/2") and three inches (3"), as directed by the Engineer, until Substantial Completion. Any unsatisfactory sod shall be removed and replaced at the Contractor's expense.

SUBMITTALS: Submittals shall be as per the S-Pages.

Sod Mix: The Contractor shall submit a document from the sod source for approval prior to delivery of sod to the site showing the seed composition and percentages of each grass type proposed.

Amendments: The Contractor shall submit proposed soil amendments for approval prior to delivery.

Invoices: The Agency reserves the right to request Contractor’s invoices for all products used in this item.

MEASUREMENT AND PAYMENT: The quantity of **SOD NEW LAWN** to be paid for under this Item shall be the number of **SQUARE FEET** of sod furnished, placed, and maintained in accordance with the plans and specifications, to the satisfaction of the Engineer.

The price bid shall be a unit price per **SQUARE FOOT** of Sod and shall include the cost of all labor, materials, and equipment necessary or required to prepare the sod bed, incorporating Limestone (where needed), Commercial Fertilizer Low Phosphorous (Slow Release), dispose of surplus materials, furnish, lay, maintain, and water Sod and all work incidental thereto, in accordance with the plans and specifications, to the satisfaction of the Engineer.

Topsoil shall be paid for separately. Compost (where required per test results for existing soil) shall be paid for under its respective contract item. The price of water, regardless of the source, shall be considered part of the bid price.

Payment for work performed under this item shall be made as follows:

40% - after preparation of sod bed

30% - after sodding and rolling

10% - after second application of fertilizer

20% - at Substantial Completion, to the satisfaction of the Engineer.

Item No.	Item	Pay Unit
PK-ESCR 109	**SOD NEW LAWN**	**SF**

END OF SECTION

Section PK-ESCR 110 – INSTALL PLANT MATERIAL

WORK: Under this Item, the Contractor shall excavate all plant pits and install, plant, maintain, and replace all **PLANT MATERIAL** specified in the Plant Schedule, in accordance with the plans and specifications, or as directed by the Engineer.

The Contractor shall be liable for any damages to property caused by planting operations, and all areas and construction disturbed shall be restored to their original conditions, to the satisfaction of the Engineer.

NAMES: Plant names, size, and grading standards shall conform to those prepared by the American Standard for Nursery Stock (ANSI Z60.1- 2014) unless otherwise specified. Genus, species and cultivar are listed in accordance with the International Code of Nomenclature (ICN). No substitutions will be permitted except upon written permission of the Engineer as an approved equal.

ASIAN LONGHORNED BEETLE QUARANTINE ZONE REGULATIONS: Due to current Federal, State and NYC DPR policy, the following host species may not be planted in the quarantine zone. Host species are as follows: Acer-Maple, Aesculus-Horsechestnut/Buckeye, Salix-Willow, Betula-Birch, Populus-Poplar, Ulmus-Elm, Albiza-Mimosa/Silk Tree, CeltisHackberry, Fraxinus-Ash, Platanus-London Planetree, Sycamore, Sorbus-Mountain Ash.

In addition, Nurseries located within the quarantine zone shall comply with State and Federal Law and all Contractors and/or Subcontractors shall be Certified by the New York State Department of Agriculture and Markets to perform work within the Quarantine Zone (see Submittals section below).

QUALITY: All plants shall be typical of their species or variety. They shall have normal, well developed branches and vigorous fibrous root systems. They shall be sound, healthy, vigorous plants free from defects, disfiguring knots, sun scald injuries, dead or broken branches, abrasions of the bark, plant diseases, insect eggs, borers, and all forms of infestation. All plant material shall be tagged by the Engineer who shall reject all plant materials not meeting the above specifications, and trees having damaged or missing leaders, multiple leaders, Y-crotches, or indications of topping or heading back.

All plants shall be nursery-grown, unless otherwise stated. All trees and shrubs shall have been growing under similar climatic conditions as the project site two (2) years prior to the date of the contract. Plants held in storage will be rejected if they show signs of growth during storage. Collected plants shall be taken from a soil favorable to good root development. All collected material shall be clean sound stock, free from decaying stumps.

Herbaceous plants, vines, and groundcover shall be vigorous healthy plants, a minimum two (2) years old, from cuttings, seed, or division, with well-developed root systems and crowns, as specified in the Plant Schedule. Bulbs, corms, tubers and rhizomes shall be firm, non-desiccated, and certified free of disease and viral infection, of the sizes, grades, and varieties indicated in the Plant Schedule.

PLANT SOURCES FOR NATIVE PLANTS ONLY, WHERE APPLICABLE: Native plant material must be derived from the local genotypes of the native Plants specified. For purposes of this native plant material paragraph, “local” shall mean within 150 miles from the planting site. However, a reasonable effort shall be made to obtain sources of plant material as close to the planting site as possible. All plants must have been grown in a hardiness zone no warmer than Zone 7 or colder than Zone 6 as determined by the USDA Agricultural Research Service, Plant Hardiness Zone Map. Plant quality shall be typical of their species. Plant material should exhibit the range of variation typical of local genotypes of the species as determined by the Engineer.

They shall have normal branching and vigorous fibrous root systems. They shall be sound, healthy plants, free from sunscald injuries, or other mechanical injury, plant diseases, insect eggs, borers and all forms of infestations. All plants shall be nursery grown unless otherwise stated. Collected material will not be accepted. Except as may otherwise be specified in this native plant material paragraph, all other sections of this Plant Material specification shall also apply to the Native Plants. The native plant material, subject to availability and adherence to the requirements of this paragraph, may be purchased from the following nurseries or approved equal nurseries as determined by the Engineer in consultation with NYCDPR.

1. Greenbelt Native Plant Center, Staten Island, NY
2. Pinelands Nursery, Columbus, NJ
3. Sylva Native, Glen Rock, PA

ORDERING PLANT MATERIALS: The Contractor shall notify the Engineer of the unavailability of any tree, shrub, herbaceous plant, or bulb species designated in the contract, as well as provide confirmation to the Engineer of all orders from all sources of supply. Any request for species substitution due to unavailability must be submitted in writing Engineer, within thirty (30) days of the Order to Work date. The Contractor must include the names and addresses of at least ten (10) nurseries they have contacted in an effort to locate these species, and the list shall be submitted to the Engineer. All nurseries supplying material shall be required to have a certificate from the Department of Agriculture and Markets, Division of Plant Industry, New York, or any other state where plant material is obtained, certifying that plant material is apparently free of injurious insects and diseases.

DIMENSIONS: A plant shall be dimensioned as it stands in its natural position. Trees up to and including four-inch (4") caliper size shall be measured six inches (6") above ground level. Trees over four inches (4") in caliper size shall be measured twelve inches (12") above ground level. Stock furnished shall be a fair average of the minimum and maximum sizes specified. Larger plants cut back to sizes specified will not be accepted.

Container grown herbaceous plants, groundcover, and vines shall be well rooted in the container size indicated on the Plant Schedule, grown in the container at least one year prior to planting. Bulbs, corms, tubers and rhizomes shall be Top Size, or as indicated on the Plant Schedule. Annual flowering plants shall be vigorous, well rooted, with no indications of disease or stress.

PREPARATION OF PLANTS: All precautions customary in good trade practice shall be taken in preparing plants for moving. Workmanship that fails to meet the highest standards will be rejected. All plants shall be dug immediately before moving unless otherwise specified. All plants shall be dug to retain as many fibrous roots as possible. Balled and burlapped and balled and platformed plants shall have a solid ball of earth of minimum specified size, securely held in place by burlap and stout rope or twine. Oversized or exceptionally heavy plants are acceptable if the size of the ball or spread of roots is proportionately increased, to the satisfaction of the Engineer. Loose, broken, or manufactured balls will be rejected. Bare root plants shall be puddled immediately after digging by immersing the roots in a hydrogel slurry, so as to completely coat the roots.

DELIVERY: Plants shall be packed, transported, and handled with utmost care to ensure adequate protection against injury. When transported in closed vehicles, plants shall receive adequate ventilation to prevent sweating. When transported in open vehicles, plants shall be protected by tarpaulins or other suitable cover material. All bare root plants shall be adequately protected from drying out by covering the roots with a plastic bag and planting within 2 weeks of being dug. Balled and burlapped plants shall be set on the ground and the ball covered with soil.

Until planted, all material shall be properly maintained and kept adequately moist, to the satisfaction of the Engineer.

INSPECTION: Inspection may be made before digging if the Engineer directs, but no plant material shall be planted by the Contractor until inspected by the Engineer at the site of the work. Plant material will be rejected if delivered with broken or damaged root balls, or if damaged on site by rough handling. All rejected material shall be immediately removed from the site and replaced with acceptable material at no additional cost

PLANT SCHEDULE

The Plant Schedule is located in the Contract Drawings.

ABBREVIATIONS

Cal.	Indicates the caliper of the trunk of the tree.
B & B	Indicates tree or shrub to be “balled and burlapped”.
Cont.	Indicates tree, shrub or perennial to be delivered “container”.
B.R.	Indicates a tree or shrub to be delivered "bare root".
O.C.	Indicates "on center" or spacing between plants in all direction.
Ht.	Indicates overall height of tree.
*	Indicates plant as being native to the mid-Atlantic region.
(GI)	Recommended for Green Infrastructure / Rain Gardens
(OGI)	Recommended for Green Infrastructure / R.O.W. Bio-swales
Item No.	Indicates specific species of plant material, including a description. Example below: ITEM NO. Genus species, Plant Description

PLANT DESCRIPTION

TREES: All trees shall be B&B, major trees branched 6-7' from the ground, minor trees as specified. Caliper size shall be as indicated. Root ball size and height shall correspond to American Standard for Nursery Stock (ANSI Z60.1- 2014) standard for the specified caliper size. Where height is specified, root ball size shall correspond accordingly. Well-branched top and fibrous root system essential.

SHRUBS: Height shall be as indicated. Root ball or container size and number of canes shall correspond to American Standard for Nursery Stock (ANSI Z60.1- 2014) standard for the corresponding shrub height. Heavy root system, all shrubs shall be well branched to the ground.

VINES, GROUNDCOVER, AND HERBACEOUS PLANTS: Container size shall be as indicated on the plans. All plants shall have vigorous root systems and have grown in the container for at least one year prior to planting.

PLUGS: Plugs shall have vigorous root systems.

ANNUALS: Annual flowering plants shall be vigorous, well rooted, with no indications of disease or stress.

BULBS, CORMS, TUBERS AND RHIZOMES: All bulbs, corms, tubers and rhizomes shall be top size, firm, and non-desiccated.

PLANT SOURCING, SELECTION, AND INSPECTION: Contractor shall locate plant material source(s), confirm availability of each plant type in compliance with Contract Documents, and shall submit, as specified, a complete list of all plant material for Project with nursery source identification for each plant. Contractor shall prepare for plant selection by:

1. Make all pre-selection arrangements with and at nursery supply source(s) to insure a ready supply of materials, equipment, and manpower required for an efficient selection and tagging procedure.
2. Request visit of Engineer as applicable at least (14) days in advance of the Contractor's desired inspection date for each type of plant material.
3. As directed by Engineer, plant Installer's Supervisor and nursery representative shall be present for plant inspection and tagging at the nursery source and at applicable times on-site.

Inspection and Selection of Plant Materials: Engineer will inspect plant material and make selection prior to digging at place of growth for compliance with genus, species, variety, size and quality.

1. All trees will be inspected and selected at the nursery sources by Engineer for conformity to the specification requirements.
2. The Engineer may require inspection of representative samples, typical of five (5), of each species of shrub, groundcover, vine, perennial, grass and bulbs.
3. Nursery shall certify, in writing, that all trees tagged are disease and pest free.

Selected plants shall be tagged in the nursery as directed by Engineer. Seals shall be placed by Engineer on selected plants and not removed until the end of the Guarantee period.

Inspection and selection by Engineer shall not affect the right of inspection and rejection during delivery or during and after installation.

Photographs: Furnish photographs of the plant material at the Engineer's option or request.

1. Photographs (using digital camera) shall be taken at the nursery source. A scale figure or measuring device to indicate size shall be in each photograph.
    a. Tree photographs shall include images of the entire plant and detail photographs showing the following: base of the tree, leaves, branching structure, form and habit.
    b. Shrub photographs shall include images of the entire plant, and detail photographs showing the following: base of the plant, leaves, branching, structure, form and habit, rootball (for balled and burlap material), and /or roots (for potted material).
2. Each photograph taken shall be labeled with the botanical and common names, nursery name, location and date.

On-Site Inspection at Time of Delivery: Notify the Engineer seven (7) days in advance of any delivery of plant materials to the site.

The Engineer may inspect all plant material upon delivery to the site prior to installation. Plant material inspection on site may be combined with inspection of the staked layout of all plant materials; however, no plants shall be installed prior to this inspection.

Rejected plants shall be removed from the site immediately. Replacements to be provided at no additional cost to Client. Replace promptly as to not delay project schedule.

On-site inspection at time of planting completion: At the completion of the planting installation, the Contractor shall request an inspection by the Engineer of all planting installations.

PLANTING OPERATIONS:

TIME OF PLANTING: Unless otherwise directed by the Engineer, deciduous material shall be planted from March 1st to May 1st and from October 15th to December 15th. Evergreen material

shall be planted from April 1st to May 15th and from September 1st to October 15th, or as approved by the Engineer.

LOCATION: Site characteristics, such as overhead power lines, existing vegetation, and infrastructure items, such as curbs and sidewalks, shall be considered. Trees that grow taller than thirty feet (30') should not be planted directly under power lines. When the design allows, the tree leader shall be offset from power lines.

LAYOUT: The location of plants, as shown on the drawings, is intended only as a guide. Plants shall be delivered to the site and organized as per approved Detailed Work Plan. All species of plants that form a planting composition shall be delivered at the same time, unless otherwise directed. Bed layout and shrub species distribution shall be approved by Engineer prior to any planting installation. Contractor shall provide proper oversight of laborers to ensure shrub mixes are planted as per approved Work Plan and approved layout.

Should extent of planting bed change due to field conditions, Contractor shall notify the Engineer so that plant quantities and layout can be adjusted within the planting beds or shifted to another bed, if required. Such adjustments due to field conditions are the responsibility of the contractor and shall be made at no additional cost to the City. Any such field conditions shall be brought to the Engineer's attention in a timely manner so no adjustments to schedule is required.

Stake tree pit locations, paint irrigation and utility lines and obtain approval by the Engineer before digging. Protect all utilities, irrigation lines, vegetation adjacent to construction and structures during work. Excavate all tree pits and planting areas to depths and dimensions indicated; remove all excavated subsoil from planting area and dispose of legally.

When tree and shrub pits have been dug (see Excavation of Plant Pits), the Contractor shall partially fill with water a representative number of pits in each area of the project to determine if there is adequate percolation in the subgrade at each pit. If not, notify the Engineer as specified above.

EXCAVATION OF PLANT PITS: Planting soil shall be unamended existing soil excavated from the planting pit, unless amendments, topsoil, or structural soil are specified elsewhere in the contract. When subsurface obstructions are encountered during excavation, the Contractor shall restore the disturbed area to its original condition.

All plant material in all planting applications should be checked to ensure the root crown has not been buried during containerization or balling and burlapping. If so, the excess soil should be removed and the plant set at the correct finished grade. The top of the root ball shall be set at finished grade.

Each tree shall be planted in an individual pit as specified. Pits for balled and burlapped, container material shall be dug as shown on the Standard Planting Details. The size of the root ball in diameter shall be deep enough so that the root ball sits on undisturbed subgrade, except in situations where curbs and/or adjacent pavements prevent achievement of planting pit dimensions. Sizes of restricted planting pits (i.e. street trees) shall be at the maximum width allowed, and the same depth as the root ball being planted. Any changes in the planting pit sizes shall be broad enough to accommodate the roots fully extended and only deep enough so that the uppermost roots will be just below the original grade.

No plant pits shall be dug until the proposed locations have been staked on the ground by the Contractor and approved by the Engineer. No plant pits shall be backfilled until planting is approved by the Engineer. Where directed, pits shall have sloped sides (or as per the Standard planting Details). Excavated material, when found to be unsuitable, shall be removed from the

site and replaced with topsoil, as directed by the Engineer, and paid for under the Items, 6.02 AAN 'Unclassified Excavation' and 'Topsoil'. Any amendment will be as directed and determined by the Engineer.

Extreme care shall be taken not to excavate to a depth greater than required. The subgrade below the root ball shall be tamped slightly to prevent settlement. Where, in the opinion of the Engineer, the subgrade material is unsuitable, the size of the plant pits shall be dug one-half (1/2) wider than normally required. The bottom and sides of the pit shall be backfilled with the existing soil, without amendments, and thoroughly worked into place to remove air pockets and voids.

Planting beds for Shrubs, Vines, Herbaceous, and Groundcover plants shall be excavated to the dimensions and depths indicated on the plans and backfilled with approved topsoil. Bulbs, Corms, Tubers, Rhizomes and Annuals shall be planted in the existing unamended soil or prepared planting beds with improved soil and/or a water absorbent medium, as designated on the drawings.

Planting beds that are installed within tree protection zones, can only be done in the presence of the Engineer. All excavation and plant installation is to be done by hand, with minimal soil disturbance where shown on plans. No existing tree roots shall be cut without written authorization from the Engineer. Plants shall not be placed within (three) 3 feet of the tree trunk.

Mycorrhizal Fungi Innoculant: Shall be applied by means of a three ounce (3 oz.) premeasured dry formulation packet, such as Mycor Tree Saver Transplant®, as manufactured by Plant Health Care, Inc., Pittsburgh, PA. Rhizanova Tree Transplant, as manufactured by Becker Underwood, Inc., Ames, IA, or approved equal. Packets shall contain, as a minimum: one thousand (1000) live spores of Vesicular-Arbuscular fungi, including: Entrephosphora columbiana, Glomus clarum, Glomus etunicatum, and Glomus sp.; seventeen million five hundred thousand (17,500,000) live spores of Ectomycorrhizal fungi (Pisolithus tinctorius); Biostimulant ingrediants including Yucca schidigera extract; soluble sea kelp extract derived from Ascophylum nodosum; humic acids; and acrylamide copolymer gel as a water absorbent medium. Mycorrhizal fungi inoculant shall be added to the top six to eight inches (6-8") of backfill soil in each planting pit and thoroughly mixed to distribute the inoculant. The material shall be applied according to the following chart:

Size of rootball or container	Ounces per plant
1 gallon	1
2 gal.	2
3 gal.	3
5 gal.	3
7 gal.	3
10 gal.	3
15 gal.	3
20" B&B	6
24" B&B	9
30" B&B	9
36" B&B	12
12" B&B	12

Water Retention Additive: Water Retention Additives shall be a granular polyacrylamide polymer of a potassium base and not a sodium base that slowly releases moisture into the root zone such as Terra Sorb, as manufactured by Plant Health Care, Inc., Pittsburgh, Pa., or approved equal. It shall be applied at the time of planting during a dry planting as defined by Parks and Recreation.

When planting trees, each tree shall receive three (3) ounces or amount specified by product instructions.

Half should be added at a depth of 8-10 inches and the other half just below the finished surface. When planting shrubs, perennials or annuals, the product should be applied as per product instructions.

Planting: Shall be performed by a Contractor that is approved by the Engineer for planting work. No planting shall be done except in the presence of the Engineer. All material shall be inspected by the Engineer as it is removed from the truck, prior to placing in an approved storage area or the designated planting site. All rejected plant material shall be removed from the site and replaced with acceptable material at no additional cost to the City.

Bare root material shall be adequately protected from drying out. It shall be removed from its plastic bag and planted immediately after inspection. The bundles of heeled-in plants shall be set upright on the ground, covered with mulch, and kept adequately moist until the time of installation. Until the time of planting, all plant material shall be stored in an approved location, securely fenced and maintained, to the satisfaction of the Engineer, at no additional cost to the City. All plants not planted immediately shall be watered as necessary to maintain optimal health until planting.

Place balled and burlapped material in the prepared planting pit by lifting, and carry it by the rootball. Set the tree or shrub straight and in the center of the pit, with the most desirable side facing toward the predominant view. All material shall set, after settlement, at the same level at which they have grown in the nursery. Care shall be exercised in setting the plants plumb. All ropes, stones, etc. shall be removed from the pit before backfilling. Soil for backfill shall be loose and friable and not frozen or compacted.

Cut and remove rope or wire from the top fifty percent (50%) of the rootball and cut off the burlap back to the edge of the ball. Remove as much woven product and twine as possible. All plastic or synthetic fabric must be removed from the ball at the time of planting. If root ball is enclosed by a wire basket, the Contractor shall cut away at least two-thirds (2/3) of the wire basket from the sides and top of the root ball. Remaining lateral wires must be cut to prevent future root interference. Galvanized or aluminum wire for will not be accepted.

Balled and burlapped plants shall be handled so that the ball will not be loosened. After the soil has been thoroughly firmed under and around the ball, the burlap shall be cut away from the upper half of the ball, and the remaining burlap adjusted to prevent the formation of air pockets. Soil shall be firmed at six to eight inch (6-8") intervals and thoroughly settled with water. Plants with exposed roots shall be placed in the proper position in the center of the pit after the soil in the bottom of the pit has been firmed. Roots shall be arranged in their natural position and existing soil worked in among them, firmed at intervals, and mycorrhizal inoculant and water retention additive worked into the top eight (8”) inches of backfill soil in the correct proportions. The plants shall then be thoroughly settled in with water. Care shall be taken to avoid bruising or breaking the roots when tamping the soil. All large and fleshy roots that are bruised or broken shall be pruned, making a clean cut before planting. NOTE: No cuts of any root, including bruised or broken roots, shall be made except in the presence of the Engineer.

Vines, Herbaceous, and Groundcover plants shall be carefully removed from containers or flats immediately prior to planting and set to the same depths as they were grown in the nursery bed or container, to the correct spacing indicated on the plans. Roots shall be arranged in their natural position and topsoil worked in among them, taking care to avoid bruising or damaging the roots, and fertilizer tablets added to the top four (4”) inches of backfill soil in the correct proportion for

the respective pot size. No more than one hour after planting, all plants shall be thoroughly settled in with water.

Annual flowering plants shall be carefully removed from the flats or cell-packs to avoid damaging roots or stems and planted in prepared planting beds at the same depth they were growing in the containers. Soil shall be thoroughly firmed around each crown, and plants thoroughly watered in no longer than one hour after planting.

Bulbs shall be planted in the locations indicated on the plans and to the depths and spacing indicated on the Plant Schedule. Spring Flowering Bulbs, Corms, Tubers, and Rhizomes shall be planted in late September or October, no more than six (6) weeks before frost. Summer and Fall Flowering Bulbs, Corms, Tubers, Rhizomes and Plugs shall be planted in spring, after the last killing frost, or as directed by the Engineer. All of the above shall be planted according to best horticultural practice. Prior to planting, bulbs shall be stored in a cool, dry, well-ventilated location for no longer than two (2) weeks before planting.

FINISHING SURFACE AFTER BACKFILLING: The Contractor shall cultivate and rake over finished planting areas and shall leave the site in an orderly condition. On level ground or slight slopes in non-paved areas, a shallow basin a little larger than the diameter of the plant pit shall be left around each plant, as shown on the plans, or as directed by the Engineer. On steep slopes, the soil on the lower side of the plant shall be graded in such a manner that it will catch and hold water, as shown on the plans, or as directed by the Engineer. Upon completion of planting, all debris and waste material resulting from the planting operation shall be removed from the project area, and the affected area raked and cleaned as necessary.

All work done in preparing shallow basins or grading of plant pits on steep slopes and regrading and reseeding of plant saucers shall be deemed included in the unit price per plant. All berms raised for shallow basins in level or gently sloping grass areas shall be removed at the end of the guarantee period, as well as tree stakes. This topsoil shall be cast evenly over the surrounding grass areas and grass seed sown over the removed berms.

After the shallow tree basins and plant saucers and shrub beds have been prepared, they shall be mulched, three to four inches (3-4") in depth, inside and along the outside edge of the basins/saucers. Perennial beds shall be mulched to a two inch (2”) depth. Mulch shall consist of shredded bark not exceeding three inches (3") in length and one inch (1") in width. Mulch contaminated with leaves, twigs, and/or debris shall not be acceptable. Only mulch derived from tree material, not from wood waste products like sawdust, shall be acceptable. Mulch for tree pits and shrub and/ or perennial beds shall be included in the bid price.

STAKING: All staking shall be done immediately after planting and all stakes and nylon tree ties shall be maintained. Plants shall stand plumb after staking. Stakes shall be of white cedar with bark attached. They may have a maximum allowable deflection of ten percent (10%). Stakes of the dimensions shown on the plans and details shall be placed outside the root ball and shall be driven to the depths indicated on the plans and details.

Ties shall be attached to the stake no more than four (4”) inches below the top of the stake. Stakes shall be fastened to the tree with re-usable nylon tree ties as manufactured by Zip-It Tree ties, Riverside, CA, or approved equal. Stakes shall be set parallel to the contours, curbs, or walks, unless otherwise directed by the Engineer. The ties shall be tied off firmly at the stake. Trees shall stand plumb after staking. Stakes and nylon ties shall be removed at the end of the guarantee period, unless directed otherwise by the Engineer and shall become the property of

the Contractor. At the time the stakes are removed any holes left by the stake shall be filled with topsoil as specified in the “Topsoil” specification.

PRUNING: Dead, injured or diseased wood shall be removed in accordance with good horticultural practice. Crossed branches shall be pruned with a sharp tool in such a manner as to preserve and encourage the plant’s natural growth form. Do not cut leaders or use wound paint or dressing to treat cut areas. Additional pruning may be required as determined by the Transplanting Subcontractor to preserve aesthetic balance. Any pruning shall preserve the natural character of each plant and shall be done in a manner appropriate to its particular requirements. Any crown pruning shall be done during the transplanting season and may be performed either before or after transplanting, at the Subcontractor’s discretion. If done before transplanting, additional pruning may be required to correct any damage incurred during the transplanting operation. In no case shall leader branches be removed or harmed. The crowns of young trees should not be cut back to compensate for root loss.

EDGING OF PLANTING AREAS: The Contractor shall establish a neat edge where planting areas meet grass areas, as shown on the plan or as directed by the Engineer. Edging shall be done by competent mechanics in a professional manner with a spade or edging tool immediately after all planting and seeding is completed. Particular care shall be exercised in edging to establish good flowing curves, as shown on the plan or as directed by the Engineer. Edging shall be maintained by the Contractor until Substantial Completion.

MAINTENANCE: At the time of planting, the soil around each plant shall be thoroughly saturated with water, and as many times later as seasonable conditions require, until Substantial Completion. Where water is supplied from City hydrants, the Contractor shall obtain a hydrant permit from the Department of Environmental Protection.

The Contractor must have all tools necessary for using City hydrants in the Contractor’s possession at time of planting to ensure that this specification is adhered to. If conditions do not allow the use of New York City water sources, the Contractor must obtain their own source of water. No direct payment shall be made for water obtained from other than city sources, but the cost thereof shall be deemed included in various Items of the contract.

Maintenance shall include watering, weeding, cultivating, edging, control of insects, fungal infections, and other diseases by means of spraying with an approved insecticide or fungicide, pruning, adjustment and repair of stakes, anchors, and wires, repair of minor washouts and gullies up to twelve inches (12") in depth, and other horticultural operations necessary for the proper growth of all trees, as well as replacement of plants stolen or vandalized prior to Substantial Completion, to a degree judged sufficient for replacement by the Engineer. The Contractor shall also be responsible for keeping the entire area within the contract limits neat in appearance until Substantial Completion. All planting areas shall be watered, cultivated, and weeded with hoes or other approved tools within the growing season extending from May 1st to October 1est, and such cultivating and weeding shall be repeated at least once a week. Under no condition shall weeds be allowed to attain more than six inches (6") of growth. The cost of such maintenance shall be included in the bid price.

REPLACEMENT: The Contractor shall replace, in accordance with the contract plans and specifications, any plant material that is dead or, in the opinion of the Engineer, in an unhealthy or unsightly condition, and/or have lost their natural shape due to dead branches, excessive pruning, inadequate or improper maintenance, vandalism or other causes, prior to Substantial Completion. Replacement plants shall be installed in the following planting season. The cost of

replacements(s) shall be included in the unit price bid for the various furnished items of the contract.

Where vandalism or related causes are agreed by the Engineer as the cause for plant material replacement, the Contractor shall not be responsible for replacement during the guarantee period.

Where dead plant material has been identified, whether due to natural causes or vandalism, the Contractor shall remove the dead material, including stakes, and wire (if applicable) **within three (3) weeks of notification.**

Where dead plant material has been identified, whether due to natural causes or vandalism, the Contractor shall remove the dead plant material, including stakes, burlap, and wire. Earth will be leveled and new topsoil and seed, or appropriate paving material, added at the direction of the

Engineer to eliminate any hazardous conditions.

The Contractor shall maintain Replaced Plant Material to the standards outlined in the "Maintenance" subsection above.

SUBMITTALS: All submittals shall be as per the S-Pages.

Nursery: The Contractor must submit the name and address of all nurseries suppling plant material for review and approval prior to performing work.

State Certification (in quarantine zone only): The Contractor shall submit a copy of a valid Compliance Agreement issued by the State of New York Department of Agriculture and Markets, Division of Plant Industry for review and approval prior to performing work.

Invoice: The Contractor shall submit an original invoice for all plant material delivered to the site. The invoice(s) must be on the Nursery letterhead and must indicate genus and species along with the quantity and size for each individual plant material delivered to the site.

Product Data: Submit technical descriptive data for each manufactured or packaged product of this Section including tree staking materials and plant treatment material. Include manufacturer's product testing and certified analysis and installation instructions for manufactured or processed items and materials.

Qualification Data: Submit qualification data for firms and persons to demonstrate and confirm their capabilities and experience as per quality assurance section of this specification. Include lists of completed projects with project names and addresses, names and address of architects and owners, and other information requested.

Plant Inventory Log: Submit a complete inventory log, updated weekly, for all plant material for Project after delivery and transfer. Include in plant list the botanical and common names, size, quantity, plant health, form, root ball, limb height (if applicable), and other requested data. Indicate plants available for planting, plants that have died and sourcing locations for all replacement plant materials. Inventory log shall indicate plant species that are fall dig hazards.

Planting Schedule and Detailed Work Plan:

1. Submit plans indicating anticipated planting schedule and detailed work plan approach for planting areas including but not limited to perennial and grass mix areas, perennial mix areas, grass mix areas, sloped planting beds, and wide planting beds. An approach to coordination with hardscape operations, stone layout and installation, fence installation (all types), floodwall and associated offsets, DEP sewer offsets, erosion control, sodded areas, irrigation, waterfront structures, buildings, bridges and landings, utilities and lighting, and soil installation shall be included in Work Plan. Work Plan to include fall dig hazards and approach to plantings with hazards.

2. Submit plans indicating anticipated planting schedule and detailed work plan approach for planting areas at Gouverneur Gardens.

Delivery Schedule: Provide a written delivery schedule for all plant material to indicate species, quantities and anticipated delivery dates per the construction schedule.

Master Nursery List: Detailed information for each nursery included on Master Nursery List. Include company name, address, phone, fax, email, website, and number of years in business under current ownership, USDA Plant Hardiness Zone in which nursery is located, contact individual, current ownership, any outstanding litigation, soil test(s) indicating soil properties at each relevant growing location within nursery, statement of current practices for use of pesticides and herbicides. If a nursery's share of the bid is greater than 10% total unburdened plant material costs, or if the quantity of plants is greater than 10% of the total number of plants, then provide three (3) references for projects of similar scope (provide contact name, email, telephone and name of project).

Nursery Soil Analysis: Submit nursery soil analysis prior to any tagging trip to such nursery. For each nursery location, furnish soil analysis not less than three (3) months old and a written report by a qualified soil-testing laboratory stating percentages of organic matter; gradation of sand, silt, and clay content; cation exchange capacity; sodium absorption ratio; deleterious material; pH; and mineral and plant-nutrient content of the soil at each growing location.

Testing methods and written recommendations shall comply with USDA's Handbook No. 60.

Tagging Schedule: Tagging schedule to be submitted for all tagging trips at least one month prior to first trip. Provide Engineer with a Draft Tagging Schedule. Revise and update schedule based on Engineer's input and resubmit Final Tagging Schedule. Tagging to take place between January 15th and March 15th or August 15th to November 1st.

QUALITY ASSURANCE:

General: Furnish nursery-grown plants true to genus, species, variety, cultivar, stem form, shearing, and other features indicated in Plant List and complying with ANSI Z60.1; and with healthy root systems developed by transplanting or root pruning. Plants shall be field grown and tagged while in the ground. At no time will pre-dug, balled and burlapped trees be accepted or considered for use on this project. Provide well-shaped, fully branched, healthy, vigorous stock, densely foliated when in leaf and free of disease, pests, eggs, larvae, and defects such as knots, sun scald, injuries, abrasions, and disfigurement.

1. Trees with damaged, crooked, or multiple leaders; tight vertical branches where bark is squeezed between two branches or between branch and trunk ("included bark"); crossing trunks; cut-off limbs more than 3/4 inch (19 mm) in diameter; or with stem girdling roots will be rejected.
2. Collected Stock: Do not use plants harvested from the wild, from native stands, from an established landscape planting, or not grown in a nursery unless otherwise indicated.

Provide plants of sizes, grades, and ball or container sizes complying with ANSI Z60.1 for types and form of plants required. Plants of a larger size may be used if acceptable to Engineer, with a proportionate increase in size of roots or balls.

Installer Qualifications: Installations of work specified in this section shall be by firm(s) which can exhibit proof of a minimum of ten years prior successful experience with installations of equivalent type and similar scope of this Project.

1. Nursery/Plant Supplier Qualification: Plant Nursery(ies) shall have a nursery facility as an integral part of operation where majority of plants can be grown and reviewed, shall be

reputable, and shall have been in continual operation with a minimum of ten (10) years' experience as a plant grower. Nursery shall be capable of the following as a minimum:

a. Supplying plant material conforming to the quality standards, visual characteristics, sizes, species cultivars, and quantities indicated by Contract Documents.
b. Conformance to cultural practices and maintenance procedures suitable for healthy plant material.
c. Ability to hold and care for plants should schedule adjustments be required.

2. Plant Installer Qualifications: Engage an experienced installer who has completed plant installation work similar in material, design, and extent to that indicated for this project with a record of successful landscape establishment.
    a. Installer's Field Supervisor(s) for Installation and Maintenance shall be proficient at speaking English and shall be experienced in tree, shrub, groundcover and plant installation and maintenance.
    b. Supervisor(s) shall be maintained full-time on Project site when installation or maintenance is in progress.
    c. Perform installation work with personnel familiar with preparations and exterior plant installation under supervision of an experienced landscape Foreman, with at least ten (10) years' total installation experience and 5 years on project that meet or exceed the scope of this project.
    d. Provide adequate numbers and types of accessible personnel to meet the scheduling requirements of the exterior plant installation.
3. Use numbers of skilled workers and equipment type equal to work requirement or occasion. The skilled workers shall be thoroughly trained and experienced in the necessary crafts and shall be completely familiar with specific requirements and methods needed for performance of the work of this Section.

Personnel: All landscape work under this Section shall be performed by personnel familiar with planting work and under the supervision of an experienced foreman at all times.

The Planting Contractor shall have on the job, at all times, a foreman knowledgeable in horticultural practice and experienced in planting on steep slopes.

Standards: The names of the plants are required to conform to the nomenclature of "Standardized Plant Names," latest edition, adopted by the American Joint Committee on Horticultural Nomenclature.

Drawings References and Definitions: Refer to Contract Drawings for plant list and planting layouts. Plant list is for guide only. Quantities, sizes, and types of plant material shall be verified by Contractor's review of planting plans and layouts. Where discrepancies are identified and additionally verified with Engineer, the planting plans shall take precedence.

Mock-ups: mockups to set quality standard for fabrication and installation. All mock ups shall be undertaken after completion of pre-cast and soil installation. Build a mockup of all planting of the following areas for review to a minimum size of 12’ x 20’, including but not limited to:

1. Gouverneur Gardens
2. Tree, shrub, perennial, and grass at Nature Exploration
3. Fire Boat House Planters at Stairs
4. Landscape slope with seating stair at basketball court north of the Delancey Bridge
5. Nature exploration water play feature and boulder area
6. Stone in landscape slope at Corlears, Delancey and 10th Bridges
7. 10th Street Bridge city-side landing
8. 10th Street Playground stone slope between upper and lower playground areas
9. Planting at floodwall crossing within floodwall offset zone

10. Swale area
11. Esplanade planting on structure

All mock-ups with trees shall address height to which limbs shall be pruned including stone scrambles, play areas, and grade changes.

Plant Material Observation: Following tagging, Engineer shall observe plant material at place of growth for compliance with requirements for genus, species, variety, cultivar, size, and quality. Engineer retains right to observe trees and shrubs further for size and condition of root systems, pests, disease symptoms, injuries, and latent defects and to reject unsatisfactory or defective material at any time during progress of work. Observations by Engineer shall not be a substitute for the required Certificate of Plant Health (provided at time of transfer to Landscape Contractor) which shall be provided by each participating nursery for their plant stock.

MEASUREMENT AND PAYMENT: The quantity of **PLANT MATERIAL** to be paid for under these Items shall be the number of trees, shrubs, vines, herbaceous plants, groundcovers, and bulbs of each size planted and maintained, in accordance with the plans and specifications, to the satisfaction of the Engineer.

The price bid shall be a unit price per **EACH** tree, shrub, vine, herbaceous plant, groundcover, bulb, corm, tuber, rhizomes or plug of each size, as specified in the Plant Schedule, and shall include the cost of furnishing plants, excavation, mycorrhizal innoculant, water retention additive, shredded bark mulch for tree pits, shrub beds, and perennial or groundcover beds, inspecting, planting, staking, anchoring, watering, replacing, and maintaining all plant material and all work incidental thereto, in accordance with the plans and specifications, to the satisfaction of the Engineer.

All plant material substitutions must be pre-approved as described in “Ordering Plant Materials”. Approved substitutions where size and/or description vary from that listed in the Plant Schedule included herein may result in a monetary credit due to the City.

Horticultural soil, planting soil, biochar, and compost, where called for in the plans or details, will be paid for separately under their respective Items. Shredded bark mulch beyond the tree pit and shrub or perennial bed outlines shall be paid for separately under the Item ‘Shredded Bark Mulch’. The price of water, regardless of source, is deemed included in the unit price bid. No extra payment will be made for water coming from the Contractor’s own source.

Item No.	Item	Pay Unit
PK-ESCR 110 D18-24	SHRUB 18-24 IN. HEIGHT	EA
PK-ESCR 110 D24-30	SHRUB 24-30 IN. HEIGHT	EA
PK-ESCR 110 D2G	SHRUB 2 GALLON	EA
PK-ESCR 110 D30-36	SHRUB 30-36 IN. HEIGHT	EA
PK-ESCR 110 D3G	SHRUB 3 GALLON	EA
PK-ESCR 110 D5G	SHRUB 5 GALLON	EA
PK-ESCR 110 D7G	SHRUB 7 GALLON	EA
PK-ESCR 110 FB	BULB	EA
PK-ESCR 110 OG1G	ORNAMENTAL GRASS 1 GALLON	EA
PK-ESCR 110 OG1QT	ORNAMENTAL GRASS 1 QUART	EA
PK-ESCR 110 OG2G	ORNAMENTAL GRASS 2 GALLON	EA
PK-ESCR 110 OG2QT	ORNAMENTAL GRASS 2 QUART	EA
PK-ESCR 110 OG3G	ORNAMENTAL GRASS 3 GALLON	EA
PK-ESCR 110 PG1G	PERENNIAL/GROUNDCOVER 1 GALLON	EA
PK-ESCR 110 PG1QT	PERENNIAL/GROUNDCOVER 1 QUART	EA

PK-ESCR 110 PG2G	PERENNIAL/GROUNDCOVER 2 GALLON	EA
PK-ESCR 110 PG2QT	PERENNIAL/GROUNDCOVER 2 QUART	EA
PK-ESCR 110 PG3G	PERENNIAL/GROUNDCOVER 3 GALLON	EA
PK-ESCR 110 PGP32	PERENNIAL/GROUNDCOVER DEEP PLUG 32	EA
PK-ESCR 110 PGP50	PERENNIAL/GROUNDCOVER DEEP PLUG 50	EA
PK-ESCR 110 T10-20	TREE PLANTING 1.0”-2.0” CALIPER	EA
PK-ESCR 110 T10G	TREE PLANTING 10 GALLON CONTAINER	EA
PK-ESCR 110 T20-25	TREE PLANTING 2.0”-2.5” CALIPER	EA
PK-ESCR 110 T20G	TREE PLANTING 20 GALLON CONTAINER	EA
PK-ESCR 110 T25-30	TREE PLANTING 2.5”-3.0” CALIPER	EA
PK-ESCR 110 T30-35	TREE PLANTING 3.0”-3.5” CALIPER	EA
PK-ESCR 110 T35-40	TREE PLANTING 3.5”-4.0” CALIPER	EA
PK-ESCR 110 T40-45	TREE PLANTING 4.0”-4.5” CALIPER	EA
PK-ESCR 110 T45-50	TREE PLANTING 4.5”-5.0” CALIPER	EA
PK-ESCR 110 T5G	TREE PLANTING 5 GALLON CONTAINER	EA
PK-ESCR 110 T6-8	TREE PLANTING 6-8 FT. HEIGHT	EA
PK-ESCR 110 C10-12	CONIFER TREE PLANTING 10-12 FT. HEIGHT	EA
PK-ESCR 110 C12-14	CONIFER TREE PLANTING 12-14 FT. HEIGHT	EA
PK-ESCR 110 C14-16	CONIFER TREE PLANTING 14-16 FT. HEIGHT	EA
PK-ESCR 110 C8-10	CONIFER TREE PLANTING 8-10 FT. HEIGHT	EA
PK-ESCR 110 M10-12	MULTI-STEM TREE PLANTING 10-12 FT. HEIGHT	EA
PK-ESCR 110 M12-14	MULTI-STEM TREE PLANTING 12-14 FT. HEIGHT	EA
PK-ESCR 110 M14-16	MULTI-STEM TREE PLANTING 14-16 FT. HEIGHT	EA
PK-ESCR 110 M8-10	MULTI-STEM TREE PLANTING 8-10 FT. HEIGHT	EA
PK-ESCR 110 VH10	VINE 10 IN. CONTAINER	EA
PK-ESCR 110 VH1G	VINE 1 GALLON	EA
PK-ESCR 110 VH2G	VINE 2 GALLON	EA

END OF SECTION

SECTION PK-ESCR 111 – SYNTHETIC TURF-INFILL TYPE ON STONE BASE

WORK: Under this Item, the Contractor shall furnish and install **SYNTHETIC TURF-INFILL TYPE ON STONE BASE (SPORTS)** with shock pad in accordance with the plans, specifications, and directions of the Engineer.

MATERIALS: Unless otherwise provided for herein, all materials and methods shall conform to the applicable portions of the NYCDOT Standard Highway Specifications.

Geotextile: Shall be a nonwoven, rotproof, heavy weight synthetic geotextile necessary to provide reinforcement, separation of the base aggregate and subgrade soils, and filtration of water from the base aggregate to the subgrade soils. Geotextile used shall conform to the following properties:

Property	**ASTM Test**	
Elongation	D4595	>50%
Grab Strength (min.)	D4632	665 N (150 lbs)
Tear Strength (min.)	D4533	270 N (60 lbs)
CBR Puncture (min.)	D4833	370 N (85 lbs)
Permitivity (min.)	D4491	1.3/sec
Apparent Opening Size (max.)	D4751	0.212 mm (0.0083 in) Std. No. 70 sieve

Nonwoven geotextile shall be Mirafi® 160N, as manufactured by TenCate, Pendergrass, GA, AEF 880, as manufactured by BOOM Environmental Products, New Bedford, MA, FX-60HS manufactured by Carthage Mills, Cincinnati, OH or approved equal.

Slotted Polyethylene Pipe: Pipe shall be either full circular cross-section or a slim line drainage system, whichever is shown on the drawings. A slim line drainage system is a flexible, prefabricated drainage system, with either a series of small interconnected corrugated round pipes or a flat pipe with full horizontal cross-section, wrapped in a non-woven, drainage geotextile. The Contractor shall not have the option of substituting the slim line drainage system where round pipe is shown (or vice versa). The drawings shall strictly be followed. Pipe and fittings of both types shall be made from high density, virgin PE compounds that conform to the requirements of cell Class 324420C, as defined and described in ASTM D3350. Slim line drainage system manufactured for this specification shall comply with the requirements for test methods, dimensions, and markings found in AASHTO Designations M288. Slim line drainage pipe and fittings shall be Multi-Flow Drainage Systems as manufactured by Varicore Technologies, Inc., Prinsburg, MN, or AdvanEdge pipe as manufactured by Advanced Drainage Systems, Inc., Ludlow, MA, or approved equal. The slim line drainage system shall be eighteen (18”) inches in width with an outer corrugated perforated pipe wall.

Circular pipe (N-12) manufactured for this specification shall comply with the requirements for test methods, dimensions, and markings found in AASHTO Designations M252 and M294. Pipe shall have an outer corrugated perforated wall and an essentially smooth inner wall (waterway).

Corrugations for these sizes may be either annular or spiral. Size shall conform to the AASHTO classification "Type SP" (which describes pipes with a smooth waterway and Class 2 perforations). Pipe and fitting shall be as manufactured by Advanced Drainage Systems, Ludlow,

MA, or approved equal. The minimum parallel plate stiffness values when tested in accordance with ASTM D2412 shall be as follows:

Diameter	Pipe Stiffness
4" (100mm)	50 psi (340 Kpa)
6" (150mm)	50 psi (340 Kpa)
8" (200mm)	50 psi (340 Kpa)
12" (300 mm)	50 psi (340 Kpa)

Sock: The circular perforated pipe shall have a "DC Sock", a polyester machine knitted envelope factory applied and ready for installation. Sock not required for the slim line drainage system.

Fittings: The fittings shall not reduce or impair the overall integrity or function of the pipeline. Fittings may be either molded or fabricated. Common corrugated fittings include in-line joint fittings, such as couplers and reducers, and branch or complimentary assembly fittings such as tees, wyes, and end caps. These fittings may be installed by various methods, such as snap-on, screw-on, bell and spigot, and wrap around. Couplings shall provide sufficient longitudinal strength to preserve pipe alignment and prevent separation at the joints. Coupling of the pipes shall be performed using Standard ADS (Advanced Drainage Systems) N-12 split coupler PRO LINK ST, or PRO LINK 10.8, or PRO LINK 5, or approved equal. Only fittings supplied or recommended by the pipe manufacturer shall be used. Where designated on the plans, a neoprene or rubber gasket shall be supplied.

Base Aggregate: Shall consist solely of crushed ledge rock and shall be broken stone or gravel as defined in the NYCDOT Standard Highway Specifications, free draining, well graded, uniformly mixed washed stone aggregate. The total thickness of the base stone aggregate shall be six (6") inches minimum. Base aggregate shall be a combination of coarse aggregate with a fine top aggregate. The coarse aggregate shall be four (4") inches in thickness and the fine top aggregate shall be two (2") inches in thickness. Materials shall meet the gradations shown below.

Base Coarse Aggregate (3/4 inch material)

Sieve Size	Percent Passing by Weight
1 ½"	100
¾"	80 – 90
3/8"	30 – 65
No. 4	10 – 40
No.16	0 – 10
No.200	0 – 5

Base Fine Top Aggregate (3/8 inch material)

Sieve Size Percent	Passing by Weight
½"	100
3/8"	85 – 100
No. 4	10 – 30
No.8	0 – 10
No.200	0 – 2

The aggregate must contain three and one-half to four percent (3½ - 4%) moisture content to ensure that fine particles don't migrate and to facilitate proper compaction. The Contractor shall provide certification from the source plant that aggregate meets all requirements. If deliveries of base aggregate show segregation of sizes, material shall be deposited in stockpiles and

thoroughly mixed prior to installation. **Bank run gravel, rounded sands and recycled concrete material shall be rejected for use as base aggregate.**

Shock Pad: A system without a shock pad is NOT acceptable and will be rejected. Pad shall be free draining, constructed from a porous cross link, closed cell polyethylene pad made of 90% recycled HDPE (High Density Polyethylene), minimum twenty (20mm) millimeters thick, such as one of the following:

"Sport Drain Max" as manufactured by Engineered Sportfield Solutions, Baltimore, MD

"ProPlay20 Sport" as manufactured by Schmitz Foam Products, Inc. Coldwater, MI

"SportLite HD20SL-NW3-SG" as manufactured by ThermaGreen Sport products

Toronto, Canada

Or approved equal.

Seam Tape: shall be as recommended by the manufacturer. All seam tape shall be a minimum of twelve (12") inches wide.

Synthetic Turf: Yarn shall be TenCate Tapeslide XP, Bonar FB Ultra HD, Bonar FB Global or Shaw High Performance Slit Tape, or approved equal twisted parallel long-slit polyethylene tape, minimum ten thousand (10,000) denier, 100 micron, one hundred percent (100%) polyethylene non-abrasive fiber or approved equal. Monofilament fibers are NOT acceptable under this specification. Pile weight shall be between fifty (50) and fifty-two (52) ounces per square yard. The fiber shall be treated with an ultraviolet (UV) inhibitor and guaranteed minimum eight (8) years against UV degradation and fading.

Tuft height shall be one and three-quarter (1 3/4") inch long fibers with a minimum of one and one quarter (1-1/4") inches infill or more, to meet required G-max criteria. Turf shall be delivered in minimum twelve foot (12') width rolls of sufficient length to run from sideline to sideline. Turf color shall be Verde, simulating natural grass, unless otherwise shown on the drawings or approved by the Engineer. The backing shall consist of a perforated primary and secondary backing with a minimum drainage rate of twelve (12") inches per hour. Primary backing shall be woven polypropylene. Secondary backing shall include a nonwoven membrane system with polyester additive featuring dimensional stability characteristics, such as "Colback" manufactured by Colbond Nonwovens, Enka, NC, or approved equal.

Acceptable turf products are: "Rhino SF50" as manufactured by AstroTurf, Dalton, GA., "PremierXP50" as manufactured by A-Turf, Williamsville, NY, "Classic Eco-E50" as manufactured by Shaw Sports Turf, Calhoun, GA, "Smart Grass" as manufactured by AFS Corporation, Fort Washington, PA, or approved equal. A system without a shock pad is not acceptable and will be rejected. The system must meet all G-max field test requirements.

Synthetic Turf Infill Material: Resilient Infill shall be coated, sanitary, rounded, uniformly sized sand (silicon dioxide SiO2) or quartz made from virgin materials for synthetic turf systems. Sieve analysis shall show that material meets requirements for sieve sizes as described below but under no circumstances shall more than 3% pass the No. 30 sieve.

Infill shall be coated or colored sand and shall be one of the following:

- Envirofill infill manufactured by US Greentech, LLC, Cincinatti, OH
- Colorbrite SpectraQuartz colored pigmented quartz infill as manufactured by Fairmount Santrol, Chesterland, OH
- Or approved equal.

Size of infill shall be a blend between No.12 to No. 20 mesh size inclusive. Color of coating or pigment shall be green or light tan in color unless otherwise shown on the plans.

Tire derived SBR (styrene butadiene rubber) crumb infill product in any percentage will be rejected.

Infill shall be low thermal absorption and low thermal capacity. The infill mixture composition proposed for the site shall be submitted for approval prior to installation.

G-max: The manufacturer shall guarantee that the G-Max rating of the synthetic turf system shall not exceed a reading of 145 at installation and 180 thereafter, as per ASTM F 355, Test Method A, and in accordance with ASTM F1936, for the entire term of the warranty. If readings do exceed 180 within the warrantee period, the manufacturer shall be responsible for whatever measures are required to achieve G-Max ratings below 180, at no cost to the City. (See Submittals)

Goal or Perimeter Playing Lines and Logos: Shall be as shown on the drawings and shall be painted unless inlaid is specifically shown on the drawings. For primary playing lines, the turf color shall be white. Secondary lines shall be yellow (unless otherwise shown on the drawings). Line painting shall be performed and paid for under item “Paint Lines- 4” Width– Synthetic Turf”.

Recycled Plastic Lumber Edge: Synthetic turf shall be attached to a recycled plastic lumber nailer placed around the perimeter of the field and the edges of any cutout areas, as designated on the contract drawing. For the nailer, either three by six (3 x 6) or three by eight (3 x 8) RPL is acceptable. Recycled plastic lumber shall be fabricated from one hundred percent (100%) High Density Polyethylene (HDPE) and Low Density Polyethylene (LDPE) recycled polyethylene, including UV-inhibiting pigment, Molded Grade Plastic Lumber as manufactured by Plastic Lumber Yard, Norristown, PA, PolyForce™ Structural Plastic Lumber manufactured by Tangent Technologies, LLC, Aurora, IL, SelectForce as manufactured by Bedford Technologies, Worthington, MN, or approved equal. Composition and mechanical properties shall be as follows:

Minimum High Density Polyethylene: 70%
Tensile Strength (ASTM D638): 1200 psi
Compressive Strength (ASTM D6108): 1200 psi
Flexural Modulus of Elasticity (ASTM D6109): 95,000 psi
Average Nail Pull Out Strength (ASTM D6117): 280 lbs

The Bulk Density and Specific Gravity of the recycled plastic lumber shall conform to the acceptable standards determined by the standard test method in ASTM D6111. Recycled plastic lumber shall not absorb moisture, corrode, rot, warp, splinter, or crack and the surface shall not be slippery when wet. The recycled plastic lumber shall not contain any material that will be irritating when in contact with skin. Cross sections shall not show wide deep gaps or holes. Plastic lumber shall remain unpainted. Lumber is totally below grade and therefore any color or combination of colors is acceptable.

Hardware: Hardware for attaching synthetic turf to recycled plastic lumber shall be minimum two (2”) inches in length, stainless steel or galvanized and as supplied by the ic turf manufacturer/installer.

Reinforcing Bar: Shall be of the sizes and dimensions shown on the plans. Reinforcement shall meet the requirements of the NYCDOT Standard Highway Specifications.

Sealant: Shall be a one part polyurethane elastomeric sealant, such as Sikaflex 1a, as manufactured by Sika, Lyndhurst, NJ or approved equal. Sealant shall be resistant to water, diluted acids, and alkalis and the color shall match the recycled plastic lumber.

TESTS: Testing shall be conducted by an accredited independent environmental laboratory in conformance with the National Environmental Laboratory Accreditation Program (NELAP) conference standards. (Submit laboratory for approval: See Submittals paragraph). The proposed synthetic turf materials must meet the following test requirements and criteria:

1. Infill- Aqueous Test: After infill material is prepared in accordance with EPA Method 1312 Synthetic Precipitation Leaching Procedure (SPLP), a total analysis shall be performed to determine heavy metal content in accordance with either EPA Method 6010 or EPA Method 6020. Semi-volatile organic content shall be determined under Method 8270C and shall include data for aniline (CAS #62-53-3), phenol (108-95-2) and benzothiazole (9516-9). Heavy metal content shall not exceed NYS DEC Groundwater Standards. Total lead (Pb) content shall not exceed .025 parts per million (ppm), total Chromium (Cr) content shall not exceed .05 parts per million (ppm), total Zinc (Zn) shall not exceed 2.0 ppm.

2. Carpet Fibers- Solid Digestion Test: The synthetic turf fiber should be tested as per ASTM F2765 “Standard Specification for Total Lead Content Synthetic Turf Fibers” or latest rev. The total lead (Pb) content measured shall be less than 100 parts per million (ppm) and the total Chromium (Cr) content shall not exceed 25 parts per million (ppm). Testing shall be conducted by an accredited independent environmental laboratory in conformance with the National Environmental Laboratory Accreditation Program (NELAP) conference standards. (Submit laboratory for approval: See Submittals paragraph).

INSTALLATION: It shall be the responsibility of the synthetic turf contractor/installer to inspect and certify that the base is ready for the installation of the turf system, and when satisfied with its condition the turf contractor/installer shall notify the Engineer in writing of this acceptance.

Excavation of areas to receive synthetic turf shall be performed in accordance with the item 6.02 AAN “Unclassified Excavation”, specified elsewhere in this contract. However, payment for excavation performed in connection with the installation of synthetic turf shall be deemed included in the price bid for this item.

The area to receive the resilient artificial turf shall be excavated to the correct depth, including peripheral drainage trenches, where shown in drawings for slotted polyethylene pipe. The subgrade shall be laser graded and pitched to ensure positive drainage (an average one-half percent (1/2%) from the center to the peripheral slotted pipe drainage lines), as indicated on the drawings, and all finished subgrade elevations verified with laser leveling instruments. The Contractor shall be careful to avoid over excavation. The geotextile shall be rolled directly over the prepared subgrade and the peripheral drainage trench, overlapping all seams a minimum of six inches (6”) in all directions.

SURPLUS: Excess material excavated by the Contractor shall be legally disposed of as part of the bid price of this item. Disposal of contaminated materials, if present, shall be paid for separately.

All slotted polyethylene pipe shall be laid in reasonably close conformity to line and grade and shall have a full, firm, and even bearing at each joint and along the entire length of pipe and surrounded with the base aggregate drainage material, in accordance with the plans, specifications, and directions of the Engineer. Joint misalignment shall not result in offsets, in the interior smooth liner, greater than one-quarter inch (1/4"). Pipe laying shall begin at the downstream end and progress upstream. Any single run of pipe, excluding end sections, shall consist wholly of the same type material unless otherwise directed by the Engineer. No section of

pipe used shall be less than three feet (3') in length. Installation of the pipe shall be in accordance with ASTM D2321. Connection(s) to drainage system (pipes or structures) shall be deemed included in the price bid for this item.

Recycled Plastic Lumber Edging shall be installed around the perimeter of the field area and the clay cutout areas (if any) on a prepared level surface and drilled to receive the steel reinforcing rods, the rods hammered in place to one-quarter inch (1/4") below the lumber surface and the void filled with approved sealant.

The base aggregate shall be installed in three (3) two (2”) inch lifts over the geotextile and compacted to a ninety percent (90%) Proctor Density, maintaining a consistent slope of one-half percent (1/2 %) from the centerline of the field to the sideline, unless otherwise shown on contract drawings. The base aggregate must be free draining, consistent with the vertical draining requirements of the synthetic turf manufacturer, and the surface of the field shall be perfectly level. The Contractor shall employ laser leveling devices to determine the correct subgrade and finished grade elevations.

Prior to beginning installation, the installer of the synthetic turf and pad shall inspect the subbase and supply a Certificate of Subbase Acceptance for the purpose of obtaining manufacturer’s warranty for the finished synthetic playing surface. **The synthetic turf manufacturer’s representative and the Engineer must approve the permeable base aggregate installation prior to installation of the synthetic turf.** The Contractor shall perform all work necessary to obtain the manufacturer’s written approval as part of the bid price of this item.

The shock pad shall be installed directly over the properly prepared base aggregate. The Contractor shall take extreme care to prevent disturbance of the base aggregate in regard to compaction and planarity. Any disturbed areas shall be rerolled with a four to six (4~6) ton roller, to the satisfaction of the Engineer.

The full width rolls of turf shall be laid out across the field and the edges attached to the recycled plastic lumber perimeter attachment with a nail gun, or as per manufacturer’s directions, at maximum six inch (6”) intervals. Head seams, other than at sidelines, shall not be acceptable.

Synthetic turf shall be installed with no wrinkles, ripples or bubbles. Slits in the fabric to relieve such defects are not permitted.

Seams: Adhesive installations shall be glued down with minimum twelve (12”) inch wide textured seam tape. Adhesive shall be applied to entire width of seam tape. Sewing, where used shall have stitches every one-quarter (1/4”) inch or less. Thread shall be polyester or nylon, color to be green.

All seams shall be transverse to the field direction; i.e., run perpendicularly across the field. Seams shall be flat, tight, and permanent with no separation or fraying. Permanent playing lines (where shown) shall be laid out and incorporated in the turf as shown on the drawings. Drains shall be marked on the surface with an inlaid white dot two inches in diameter. Perimeter edge details required for the system shall be as shown on the drawings, as recommended by the manufacturer, and as approved by the Project manager.

Synthetic turf adhesive shall be one of the following:

A solvent based, one-part, thixotropic high green strength urethane, similar to NORDOT #34G as manufactured by Synthetic Surfaces, Inc. Scotch Plains, NJ.

A two component, thixotropic polyurethane based adhesive manufactured specifically for use on synthetic turf, such as STA-1000 Synthetic Turf Adhesive as manufactured by Sports Turf Direct, Finleyville, PA, or Ultrabond TurfPU 2K as manufactured by MAPEI, Deerfield Beach, FL.

Or an approved equal.

Rate of application shall be a maximum of thirty (30) linear feet of seam tape per gallon of adhesive unless otherwise recommended by the manufacturer. Hot melt glue is NOT acceptable as an approved equal adhesive. Seams shall be compressed after glue application using a one ton roller or equivalent. Roll each seam a minimum of two times to ensure adhesion.

Weather Restrictions: Where gluing of seams is proposed, the temperature must be 46 degrees °F and rising. Do not deliver or install surfacing material if either ambient air temperature or material temperature is below 32 degrees °F.

Installing Infill: The completed synthetic turf field shall be brushed with a motorized nylon rotary broom and the infill material immediately installed with a minimum four foot (4') width drop spreader. The infill shall be applied in a minimum two (2) lifts to one and one-quarter inch (11/4") depth, totaling nine pounds per square foot (9 lbs/sf) of infill material, and the infilled area brushed between each lift. The area shall be wetted as necessary during installation to minimize dust.

Follow-Up Visits: The Contractor shall prepay the synthetic turf manufacturer for two (2) followup visits at six month (6 mo.) intervals after the Substantial Completion date. The visits shall be scheduled by the Engineer to inspect the condition of the synthetic turf, infill material, drainage system, clay skinned areas (if any), and peripheral attachments. Items found to require repair, amendment, or replacement shall be the responsibility of the Contractor. Repairs, except those due to vandalism, shall take place immediately upon notification by the Engineer.

CLEAN-UP: At the completion of the work, the Contractor shall remove accumulated debris, tools, equipment, containers, etc. from the site in an approved manner. The entire job shall be left broom clean and acceptable.

SUBMITTALS: All submittals shall be as per the S-Pages.

Certificate of Subbase Acceptance: Prior to the beginning of installation, the manufacturer/installer of the synthetic turf and pad shall inspect the subbase and supply a Certificate of Subbase Acceptance for the purpose of obtaining manufacturer's warranty for the finished synthetic playing surface. Acceptance of subbase (see Installation) shall be on synthetic turf manufacturer's representative letterhead.

Shop Drawings: Shop drawings shall be prepared at the scale of the construction documents, or larger, and shall contain all pertinent information regarding installation, including seaming plan, edge detail, field lines, logos, etc. These drawings shall be submitted to the Engineer for approval prior to the manufacturing and shipping of materials.

Installer Qualifications: The synthetic turf contractor must demonstrate experience on at least five (5) installations of infill type synthetic turf. The synthetic turf manufacturer must certify the designated supervisory personnel on the project as competent. The Contractor shall submit for approval, the name and qualifications of the proposed contractor. The Contractor shall submit the following:

1. A letter on turf manufacturer's letterhead affirming the contractor as competent in the installation of the material, including seams and proper installation of their product.
2. Proof of five (5) installations of infill type synthetic turf by the proposed contractor.
3. Name, address, and phone numbers for a minimum of three (3) professional references associated with synthetic turf work performed by proposed contractor.

Synthetic Turf Sample and Test Results: The Contractor shall submit an eighteen inch by twenty-four inch (18" x 24") minimum sample of green turf carpet without infill material showing backing with perforations. Samples of additional turf colors, where shown, shall also be submitted. Sample warrantee shall be submitted for approval prior to approval of turf installer. Certified copies of independent (third Party) laboratory reports shall be submitted certifying the following properties at a minimum:

- Pile Weight and Total Product Weight: ASTM D5848
- Primary and Secondary Backing Weights: ASTM D5848
- Tuft Height: ASTM D5823
- Tuft bind: ASTM D1335
- Grab/Tear Strength: ASTM D5034

Heavy Metal and Semi-Volatile Organic Content Testing: The Contractor shall submit test results from the approved independent laboratory showing that turf fibers and infill meets the requirements specified herein.

Testing shall be conducted by an independent environmental laboratory accredited by the National Environmental Laboratory Accreditation Program (NELAP). The Contractor shall submit certification that the proposed laboratory is NELAP accredited to perform environmental analyses for the metals in question in both (a.) non potable water and (b.) solid and hazardous waste. If the laboratory is situated in the State of New York, NELAP accreditation must be provided by the New York State Department of Health Environmental Laboratory Approval Program (Wadsworth center). Laboratories outside New York State may obtain this accreditation from any State that issues NELAP accreditation.

Infill Samples and Testing: Two (2) samples, one (1) quart in size, of proposed infill material, along with sieve analysis shall be submitted for approval prior to installation.

Adhesive: Product literature shall be submitted prior to installation.

Seam Tape Sample: Contractor shall submit a twelve (12") inch sample of the seaming tape the manufacturer is proposing to use.

Shock Pad Sample: The Contractor shall submit an eighteen inch by twenty-four inch (18" x 24") minimum sample of the shock pad with manufacturer's product information for approval.

Base Aggregate Sample: The Contractor shall submit a five pound (5 lb.) bag of each of the proposed materials, with a sieve analysis and source of supply, for approval.

Geotextile sample: The Contractor shall submit an eighteen inch by twenty-four inch (18" x 24") minimum sample of the geotextile intended for separation and infiltration between subgrade and aggregate, along with manufacturer's product data, for approval.

Warranty: The Contractor shall submit a manufacturer's warranty listing, at minimum, an eight (8) year guarantee against UV fading, degradation, or defects, such as excessive wear or fibrillation, stipulated as more than a forty percent (40%) decrease in pile height, seam rupture, dislodgment, or inadequate drainage. The warranty shall also guarantee a G-Max rating below 145 at the time of installation and below 180 for the remaining term of the warranty. Warranty shall clearly state that if test results show that G-Max rating has not been met, the manufacturer will repair or replace product within the warranty period as necessary to meet those requirements at no cost to the City.

Maintenance Manuals: Prior to acceptance, the Contractor shall submit three (3) copies of Maintenance Manuals, which shall include all necessary instructions for the proper care and preventative maintenance of the synthetic turf system, including any painting or markings.

Independent Field Test for G-Max: After completion of synthetic turf, the Contractor shall engage the services of an independent laboratory capable of performing field tests utilizing ASTM F355 Test Method A, in accordance with ASTM F1936. Tests shall be conducted on two (2) separate visits. The first test shall be conducted after installation, but prior to the acceptance of the work. The second test shall be conducted at one of the two follow-up visits required within the guarantee period. Both tests shall be performed with no visible frost on the ground.

MEASUREMENT AND PAYMENT: The quantity of **SYNTHETIC TURF-INFILL TYPE ON STONE BASE (SPORTS)** to be paid for under this Item shall be the number of **SQUARE FEET** furnished and installed in accordance with the plans, specifications, and directions of the Engineer.

The price bid shall be a unit price per **SQUARE FOOT** of Synthetic Turf – Infill Type On Stone Base (Sports) and shall include the cost of all labor, equipment, and materials necessary or required to complete the work, including unclassified excavation, laser leveling of subgrade and finished grade, two types of base aggregates, shock pad, synthetic turf carpet, sand infill material, geotextile, slotted polyethylene pipe, filter fabric wrap for perforated pipes, sock, fittings, connection(s) to drainage system, recycled plastic lumber edge, reinforcing rods, sealant, attachments, all necessary testing, two (2) follow-up visits, all delivery charges and submittals, all in accordance with the plans, specifications, and directions of the Engineer.

Ten (10%) percent of the total dollar amount for this item shall be withheld until the first Independent Field conducted G-max Test results are submitted and found acceptable to the Agency.

Detention system including detention pipe, detention tanks, unclassified excavation for detention system and any broken stone beyond the six (6") inch base aggregate shall be paid under separately under their respective contract items. Painted lines, where shown on the plans, shall be paid for under its own contract item.

Item No.	Item	Pay Unit
PK-ESCR 111	**SYNTHETIC TURF-INFILL TYPE ON STONE BASE**	**S.F.**

END OF SECTION

SECTION PK-ESCR 1218S – STUMP REMOVAL

WORK: Under this Item, the Contractor shall remove and dispose of designated existing stumps over six (6") inches in diameter. All work shall be performed in accordance with the plans and specifications by experienced workmen to the satisfaction of the Engineer.

SPECIAL REQUIREMENTS FOR LONGHORNED BEETLE QUARANTINE ZONE: For tree work to be performed within the quarantine zone, the Contractor shall utilize the service of a contractor certified by the New York State Department of Agriculture and Markets. Due to current Federal, State and NYC DPR policy, any wood waste that is generated must be completely chipped within the Quarantine Zone, by said certified contractor. Log splitting equipment, where necessary, shall be utilized at no extra cost to the CityFor additional information regarding procedures, the Contractor shall notify the Engineer a minimum of 48 hours in advance of any work. Also, see requirements listed under heading "Submittals".

METHOD: Stumps and roots shall be excavated to a depth of three (3') feet. All voids and excavations left after the removal of the stump and roots shall be backfilled to grade with clean earth fill. The fill shall be placed and compacted by acceptable methods to the satisfaction of the Engineer. Chips generated by stump removal operations shall be removed prior to backfilling.

If, when removing the stumps, existing walks or curbs are disturbed, the Contractor shall restore and/or reset these walks and curbs, at no additional cost, to the satisfaction of the Engineer. The Contractor is responsible for locating and protecting underground utilities from damage during excavation and/or grinding of stumps.

PAYMENT SCHEDULE: The Contractor will be paid at the following rates for the different size groups of stumps removed, based on the unit bid price for removing a stump over 6" to 12" in diameter (base unit).

STUMP DIAMETER	STUMP UNITS	PAYMENT PER STUMP REMOVED
Over 6" to 12"	1.0(base unit)	100% of Unit Bid Price
Over 12" to 18"	1.25	125% " " "
Over 18" to 24"	1.50	150% " " "
Over 24" to 30"	2.0	200% " " "
Over 30" to 36"	2.25	225% " " "
Over 36" to 42"	2.5	250% " " "
Over 42" to 48"	3.5	350% " " "
Over 48"	4.0	400% " " "

ARBITRARY EXAMPLE: For example, removal of one (1) 16" diameter stump would receive payment for 1.25 stump units, removal of one (1) 36" diameter stump would receive payment for 2.25 stump units and one (1) 26" diameter stump would receive payment for 2.0 stump units for a total of 5.50 stump units.

The stump diameter shall be measured in the presence of the Engineer.

SUBMITTALS: All submittals shall be as specified in the S-Pages. The Contractor shall submit the following for review and approval prior to performing work.

QUALIFICATIONS IN QUARANTINE ZONE: State Certification-For all contracts within the Quarantine Zone, the contractor must submit a copy of a valid Compliance Agreement issued by the State of New York Department of Agriculture and Markets, Division of Plant Industry.

MEASUREMENT AND PAYMENT: The quantity of **STUMP REMOVAL** to be paid for under this item shall be the number of stump units calculated in accordance with the above payment schedule, completely removed in accordance with the plans, specifications and directions of the Engineer.

The price bid shall be a unit price for **EACH** stump of the over 6" to 12" diameter size group removed and shall include the cost of all labor, materials and equipment necessary for removing stumps, including disposal of any generated material and required fees for disposal, borrowed fill, restoration of walks and curbs disturbed by this operation, maintenance and repair of utilities and all other incidental expenses necessary to complete the work in accordance with the plans and specifications, to the satisfaction of the Engineer.

The cost of State Certification and chipping wood waste shall be included in the bid price for all Contracts located within the Quarantine zone.

NOTE: All stumps 6" diameter and less shall be removed under the Item "Clear and Grub".

Item No.	Item	Pay Unit
PK-ESCR 0712S	STUMP REMOVAL 6” TO 12” in DIAMETER	EA

END OF SECTION

SECTION PK-ESCR 132 – COLOR SEAL COAT SYSTEM

WORK: Under these items, the Contractor shall apply a color seal coat system, games and park leaf to the asphaltic pavements in accordance with the plans, specifications and directions of the Engineer.

PAINTED GAMES, including Potsy, Skelly, Boxball and Nations, shall conform to Standard Detail "PAINTED GAME LAYOUT" and PAINTED PARK LEAF shall conform to Standard Detail "PARK LEAF OUTLINES", Stencil No.1 Basketball Court Tipoff Circle.

MATERIALS: The color seal coat system consists of multiple resurfacer coats, three (3) intermediate coats and one (1) wearing coat. Patching mix shall be installed as necessary and as described under Method.

PATCHING MIX: (also known as leveling mixture) The patching mix shall be "California Court Patch Binder", as manufactured by California Sport Surfaces, Andover, MA, "Laykold Acrylic Deep Patch" as manufactured by Advanced Polymer Technology, Harmony, PA, "Acrylic Patch Binder C1480" as manufactured by SportMaster Sport Surfaces, Sandusky, OH, "Action Pave Acrylic Resurfacer" as manufactured by Copeland Coating Co., Nassau, NY, or approved equal. When installed on existing pavement where crack repair is deemed necessary, crack repair shall be Armor Crack Repair System, or approved equal.

RESURFACER COATS: Resurfacer coats shall consist of a mixture of acrylic resurfacer and No. 40-60 mesh Silica sand. The resurfacer shall be "California Acrylic Resurfacer", as manufactured by California Sport Surfaces, Andover, MA; "Laykold Acrylic Resurfacer" as manufactured by Advanced Polymer Technology, Harmony, PA; "Acrylic Resurfacer C1300" as manufactured by SportMaster Sport Surfaces, Sandusky, OH, "Action Pave Acrylic Resurfacer" as manufactured by Copeland Coating Co., Nassau, NY, or approved equal.

The sand shall be mixed with the resurfacer at the rate of 600-800 pounds of sand to 55 gallons of undiluted resurfacer, or at such other rate as the manufacturer shall require to meet job conditions. Water shall be added per manufacturer's specifications.

INTERMEDIATE COATS: (also known as Filler Coat) The intermediate coats shall be full color acrylic filler coatings consisting of colored acrylic latex emulsion compounded with No. 80-100 mesh Silica sand. The intermediate coats shall be "Plexichrome" or "DecoColor MP", as manufactured by California Sports Surfaces, Andover, MA; "Laykold ColorCoat Concentrate" as manufactured by Advanced Polymer Technology, Harmony, PA; "Color Concentrate" as manufactured by SportMaster Sport Surfaces, Sandusky, OH, "Action Pave Acrylic Filler" as manufactured by Copeland Coating Co., Nassau, NY, or approved equal.

Sand and water shall be added per manufacturer's specifications. Advantage Laykold, DecoColor Plus, Factory Fortified Plexipave or approved equal may be substituted for small areas where sand and latex emulsion pre-mixed in the factory is desired.

WEARING COATS: (also known as Finish Coat) The wearing coats shall be full color acrylic latex emulsion. The wearing coats shall be either "Plexichrome" or "DecoColor MP", as manufactured by California Sports Surfaces; "Laykold Colorcoat Concentrate" as manufactured by Advanced Polymer Technology, Harmony, PA; "Color Concentrate" as manufactured by SportMaster Sport Surfaces, Sandusky, OH, "Action Pave Acrylic Finish" as manufactured by Copeland Coating Co., Nassau, NY, or approved equal. Colors shall be as shown on plans. Water shall be added per manufacturer's specifications.

LINE PAINT: Line paint to be installed on the color seal coat shall be equal to Fed. Spec. TTP19a. The paint shall be a 100% acrylic emulsion. All line paint to be textured unless otherwise shown

on the drawings. The line paint shall be thinned with water only. The paint shall be suitable for application by brush, spray or roller. Line color shall be white or as shown on the plans.

The paint shall be equal to “Hi Hide Line paint”, as manufactured by California Sports Surfaces, Andover, MA, “Laykold Textured White Line Paint” as manufactured by Advanced Polymer Technology, Harmony, PA, “SportMaster Line Paint” as manufactured by SportMaster Sport Surfaces, Sandusky, OH, “Action Pave Acrylic textured White Line Paint” as manufactured by Copeland Coating Co., Nassau, NY, or approved equal.

METHOD: IMPORTANT RESTRICTIONS: Before the color seal coat system is applied, the asphaltic surface to receive the system shall have cured for a minimum of Thirty (30) days. The surface temperature shall be taken using a surface thermometer. The Contractor shall take readings every sixty (60) feet in all directions. If the average surface temperature is below fifty-five degrees Fahrenheit (550 °F.) or expected to be below 55 °F degrees within 24 hours, application will not be permitted. If the average surface temperature is above eighty degrees Fahrenheit (800 °F.), the surface shall be water fogged before application will be permitted. Application shall not be permitted during rain events or if a rain event is expected within 24 hours.

PREPARATION OF SURFACES: The surface shall be cleaned of all dirt, loose sand, and stone. The Contractor shall power wash the surface clean to the satisfaction of the Engineer prior to applying the color seal coat system. When installed on existing pavement where crack repair is deemed necessary, crack repair shall be performed per manufacturer’s instructions prior to application of resurfacer coats.

Before application of each coat, the surface shall be hand scraped and blown free of all dirt and foreign matter and shall be free from standing water and oils.

APPLICATION OF MATERIALS: All materials shall be mixed at the site unless otherwise permitted by the Engineer. If the Contractor is granted permission to mix any material off the site he shall arrange with the Engineer to have a representative of the Engineer present during the mixing operations. The mixed materials shall be homogeneous, segregation before or during application will not be permitted.

All materials shall be applied by approved hand or mechanical squeegees. Each completed application shall be smooth, even textured, free from ridges, valleys and tool marks.

RESURFACER COATS: The purpose of the resurfacer coats is to fill the surface voids of the asphalt pavement. To this end the resurfacer coat material shall be applied in multiple coats until the surface of the asphalt is free of voids and no telegraphing of the aggregate in the asphalt is visible. A minimum of two coats shall be applied. However, the Contractor shall apply as many additional coats as may be required to fulfill the above requirements. The resurfacer may be diluted with water in accordance with the manufacturer's specifications to obtain workability.

The application of the resurfacing coat shall be parallel in one direction of the courts, a second application may be made at ninety degrees 900 to the first coat.

After the first coat of resurfacer is complete, the entire area shall be flooded with water and allowed to drain. Any areas holding over one-sixteenth inch (1/16") (thickness of a nickel) depth of water shall be leveled with a PATCHING MIX and allowed to thoroughly cure. Patching mix shall be applied in a maximum of (1/4") one-quarter inch lifts. A maximum of (1/2") one-half inch total patch (2 lifts) shall be allowed. This process of water flooding and leveling shall be repeated until all depressions over one-sixteenth (1/16") inch have been eliminated. Surface shall be inspected to ensure all depressions have been filled before application of Intermediate Coats.

INTERMEDIATE COATS: (also known as Filler Coat) Three (3) intermediate coats shall be applied. The total amount of material to be applied shall be .10 to .16 gallons per square yard based on the material prior to any dilution. The acrylic resurfacer may be diluted as recommended by the manufacturer to obtain workability.

WEARING COATS: (also known as Finish Coat) One (1) wearing coat shall be applied. In the case of tennis court application, the wearing coat shall be applied parallel to the net line. The total amount of material to be applied shall be .18 to .30 gallons per square yard prior to any dilution. The material may be diluted as recommended by the manufacturer to obtain workability. Sand shall not be added to the wearing coats.

LINE PAINT: All painted lines shall be carefully laid out and defined on the surface by chalk markings before being painted.

Two (2) coats of line paint shall be applied. At least two (2) hours shall elapse between the painting of the first and second coats. All painted lines shall be accurately painted within the limits shown on the plans. Lines shall be clear and distinct with sharply defined edges.

Guarantee Inspection - At the guarantee inspection if the color seal coat is found to be peeling or fading due to improper installation, the Contractor shall be responsible to re-apply at the Contractor's own expense.

SUBMITTALS: At the time of the Pre-construction meeting, and in accordance with the S-Pages, the Contractor shall be required to submit, for approval, complete details of the color seal coat system the Contractor proposes to use. The specifications of all information (products or systems, manufacturer's names, product description, technical and laboratory data, mixing information, methods of application, rates and all other data) as may be required to demonstrate to the satisfaction of the Engineer that the color seal coat system the Contractor proposes to use meets the requirements of these specifications.

The Contractor shall be required to submit color samples for approval by the Engineer.

MEASUREMENT AND PAYMENT: The quantity of **COLOR SEAL COAT SYSTEM** to be paid for shall be the number of **SQUARE YARDS** of color seal coat applied and accepted in accordance with the plans, specifications, and directions of the Engineer.

For applying **PAINTED GAMES** and/or **PARK LEAF** in accordance with the plans and specifications and directions of the Engineer, the Contractor shall receive the unit prices bid.

The prices bid shall be a unit price per **SQUARE YARD** of COLOR SEAL COAT applied and accepted and shall include the cost of furnishing all labor, materials, equipment and incidental expenses necessary to complete the work, including preparation of surfaces, crack repair (where needed), patching mix, resurfacer coats, intermediate coats, wearing coats and painted lines, in accordance with the plans and specifications to the satisfaction of the Engineer.

Where the painted games and park leaf are to be installed over color seal coat, it shall be paid under the item for "Color Seal Coat System."

Item No.	Item	Pay Unit
PK-ESCR 132	COLOR SEAL COAT SYSTEM	S.Y.
PK-ESCR 132 B	PAINT LINES – 2" WIDTH – COLOR SEAL COAT AREA	L.F.

END OF SECTION

SECTION PK-ESCR 140 – TRANSPLANT TREE

WORK: Under these Items, the Contractor shall **TRANSPLANT TREE UP TO 4" CALIPER** and/or **TRANSPLANT TREE OVER 4" TO 6" CALIPER** as specified in the Plant Schedule or, in accordance with the plans, specifications, and directions of the Engineer.

NOTIFICATION: All trees to be transplanted shall be selected and tagged by the Engineer from existing plant material on the site. The Engineer must be present during all transplanting work. The Contractor shall notify the Engineer a minimum of 48 hours in advance of any work to be done under this item as well as NYC Parks Manhattan Forestry, 212-860-1845.

NOTE: Plant shall be dimensioned as it stands in its natural position. Trees up to and including inches (4") in caliper size shall be measured twelve inches (12") above ground level.

QUALIFICATIONS REQUIRED: Arborist or Landscape Contractor shall be certified by the New York State Department of Agriculture and Markets to perform pruning work within the Asian Longhorned beetle quarantine zone. All pruning of limbs and roots must be performed by a qualified arborist, trained in proper pruning techniques, tree biology, diagnosis and treatment of plant diseases, and cabling and bracing.

ASIAN LONGHORNED BEETLE QUARANTINE ZONE REGULATIONS: Due to current Federal, State and NYC DPR policy, the following host species may not be planted in the quarantine zone. Host species are as follows: Acer-Maple, Aesculus-Horsechestnut/Buckeye, Salix-Willow, Betula-Birch, Populus-Poplar, Ulmus-Elm, Albiza-Mimosa/Silk Tree, Celtis-Hackberry, FraxinusAsh, Platanus-London Plane tree, Sycamore, Sorbus-Mountain Ash.

In addition, Nurseries located within the quarantine zone shall comply with State and Federal Law and all Contractors and/or Subcontractors shall be certified by the New York State Department of Agriculture and Markets to perform work within the Quarantine Zone (see Submittals section below).". Contractor is directed to check with the New York State Department of Agriculture and Markets for the most current host list and quarantine requirements and zone boundaries.

MATERIALS:

Burlap for Root Ball: Burlap shall be a natural fabric. No nylon burlap shall be permitted.

Cord or Rope: Cord or rope shall be sisal twine. Nylon rope shall not be permitted.

Fertilizer Tablets: Shall be Healthy Start Macro Tablets®, as manufactured by Plant Health Care, Inc., Pittsburgh, PA, or approved equal. The tablets shall have a nutrient analysis of 12-8-8 and contain a minimum twelve percent (12%) humic acid by weight, as well as biostimulants derived from sea kelp, amino acids, and a wetting agent derived from Yucca schidigera. Tablets shall contain a minimum 650,000 each of the following beneficial bacteria: nitrogen fixing, phosphorus solubilizing, and growth promoting. Twenty one gram (21 gm.) twenty four month (24 mo.) release tablets shall be added to the top four (4") inches of backfilled soil in the rates indicated on the following chart:

Size of rootball or container	Tablets per plant
20-24" B&B	5
30-36" B&B	6
42-48" B&B	8
54-60" B&B	12

For larger trees, use two (2) tablets for each one-half inch (1/2”) caliper.

Mycorrhizal Fungi Inoculant: Shall be applied by means of a three (3 oz.) ounce premeasured dry formulation packet, such as Mycor Tree Saver Transplant®, as manufactured by Plant Health Care, Inc., Pittsburgh, PA; Rhizanova Tree Transplant, as manufactured by Becker Underwood, Inc., Ames, IA; or approved equal. Packets shall contain, as a minimum: one thousand (1000) live spores of Vesicular-Arbuscular fungi, including: Entrephosphora columbiana, Glomus clarum, Glomus etunicatum, and Glomus sp.; seventeen million five hundred thousand (17,500,000) live spores of Ectomycorrhizal fungi (Pisolithus tinctorius); Biostimulant ingrediants including Yucca schidigera extract; soluble sea kelp extract derived from Ascophylum nodosum; humic acids; and acrylamide copolymer gel as a water absorbent medium. Mycorrhizal fungi inoculant shall be added to the top six to eight inches (6-8”) of backfill soil in each planting pit and thoroughly mixed to distribute the inoculant. The material shall be applied according to the following chart:

Size of rootball or container	Ounces per plant
20” B&B	6
24” B&B	9
30” B&B	9
36” B&B	12
42” B&B	12
48” B&B	15
60” B&B	18
72” B&B	21
96” B&B	27

Stakes: Stakes shall be of white cedar with bark attached and have a maximum allowable deflection of ten percent (10%).

Wire: Shall be #12 gauge, annealed, galvanized, steel wire.

Hose: Shall be new reinforced one-half (1/2") inch dia. rubber hose.

Shredded Bark Mulch: Shall consist of shredded bark, pieces not exceeding three (3") inches in length and one (1") inch in width. Mulch contaminated with leaves, twigs, and/or debris shall not be acceptable. Only mulch derived from tree material, not from wood waste products like sawdust, shall be acceptable.

EXECUTION:

Note: The Engineer’s representative must be present during all transplanting work. Plants shall be installed where shown on the plans and as the directed by the Engineer.

Preparation of Plants: All precautions customary in good trade practice shall be taken in preparing plants for moving, and workmanship that fails to meet the highest standards will be rejected. All plants shall be dug immediately before moving unless otherwise directed. All plants shall be dug to retain as many fibrous roots as possible. Balled and burlapped plants shall have a solid ball of earth of minimum specified size according to the American Standard for Nursery Stock securely held in place by burlap and sisal twine. Loose, broken, and wire caged balls will be rejected. All rejected material shall be immediately removed from the site and replaced with acceptable material at no additional cost to the Agency.

Bare root plants, where recommended by the Engineer, shall conform to the same standards for balled and burlapped plant material and shall be adequately protected from drying out and immediately heeled in moist soil until planting.

Time of Planting and Transplanting: Unless otherwise directed by the Engineer, evergreen material shall be transplanted from April 1st to May 1st and from September 1st to October 15th. Deciduous material shall be transplanted from March 1st to May 1st and from October 15th to December 1st.

Excavation of Planting Pits: Tree pit shall be dug a minimum of one (1') foot wider than root ball in all directions, and depth of pit shall be thirty-six (36”) inches, or as directed by the Engineer.

No plant pits shall be dug until the proposed locations have been staked on the ground by the Contractor and approved by the Engineer. No plant pits shall be backfilled until approved by the Engineer and all pits shall have vertical sides unless otherwise directed. Where, in the opinion of the Engineer, the existing soil is unsuitable, it shall be replaced with Topsoil for New Planting Pits and Beds.

Where excavation is done by backhoe (or any comparable machine) Contractor shall exercise extreme care not to excavate too deeply. This will ensure the least amount of settling, which is important to achieve a proper planting grade. If planting pits are dug before plant material is on site, the pits shall only be excavated to two-thirds (2/3) the depth of a standard pit, the final depth to be adjusted at the time of planting. If any backfilling is required, the soil under the root ball is to be compacted sufficiently to ensure no further settling or sinking.

While awaiting planting, the Contractor shall protect plant roots from drying out and the means employed shall be satisfactory to the Engineer. In general, all plants shall stand, after settlement, at the same level at which they have grown. Care shall be exercised in setting the plants plumb with the "good face" to the outside. All ropes, stones, etc., shall be removed from the pit before backfilling. Soil for backfilling shall be loose and friable. Fertilizer tablets and Mycorhizal inoculant shall be added to backfill material in quantities described above.

Balled and burlapped plants shall be handled so that the ball will not be loosened or broken. After the soil has been thoroughly firmed under and around the lower half of the ball, the burlap shall be cut away from upper half of the ball and the remaining burlap adjusted to prevent the formation of air pockets. Soil shall be firmed at six (6") to eight inch (8") intervals and thoroughly settled with water the same day of planting.

Bare root plants shall be placed in the proper position in the center of the pit after the soil in the bottom of the pit has been firmed. Roots shall be arranged in their natural position and loose friable topsoil worked in among them, firmed at intervals and thoroughly settled with water. Care shall be taken to avoid bruising or breaking the roots when tamping the soil. All large and fleshy roots which are bruised or broken shall be pruned with a clean cut before planting

Finishing Surface After Backfilling: The Contractor shall cultivate and rake over finished planting areas and shall leave them in an orderly condition. On level ground or slight slopes a shallow saucer or basin a little larger than the diameter of the plant pit shall be left around each plant as shown on the plans or as directed by the Engineer. On steep slopes the soil on the lower side of the plant shall be graded in such a manner that it will catch and hold water, as shown on the plans or as directed by the Engineer. The transplanted plants shall be watered with a minimum of twenty (20) gallons each.

After the shallow tree saucers or basins have been prepared, they shall be mulched, three to four inches (3-4") in depth, inside, and along the outside edge of the saucers or basins.

Pruning: Dead, injured or diseased wood shall be removed in accordance with good horticultural practice. Crossed branches shall be pruned with a sharp tool in such a manner as to preserve and encourage the plant’s natural growth form. Do not cut leaders or use wound paint or dressing to treat cut areas. Additional pruning may be required as determined by the Transplanting

Contractor to preserve aesthetic balance. Any pruning shall preserve the natural character of each plant and shall be done in a manner appropriate to its particular requirements. In general, no more than one-fourth (1/4) of the wood of deciduous plants shall be removed by thinning or shortening branches. Double leaders and multiple branched crotches shall be corrected. Any crown pruning shall be done during the transplanting season and may be performed either before or after transplanting, at the Contractor's discretion. If done before transplanting, additional pruning may be required to correct any damage incurred during the transplanting operation. In no case shall leader branches be removed or harmed. The crowns of young trees should not be cut back to compensate for root loss. All pruning shall be done with sharp tools in accordance with the instructions, and in the presence of, the Engineer.

AT NO TIME SHALL MORE THAN 20% OF A TREE'S LIVE CANOPY BE REMOVED.

Debris: If directed by the Engineer, pruned material shall be chipped and spread as mulch to supplement "Protect existing tree roots with wood chips" item. All other pruned material and debris shall be removed from the site of the contract within twenty four (24) hours and disposed of as directed by the Engineer, and per the Quarantine provisions.

Staking: All staking shall be done immediately after planting and all stakes, wire and guying material maintained. Plants shall stand plumb after staking. Stakes shall be placed outside of the root ball and shall be driven thirty-six inches (36") into the ground for all trees under three and one-half (3-1/2") inches in caliper and shall be driven forty-eight inches (48") into the ground for all larger trees. Stakes shall be fastened to the tree with a doubled strand of #12 gauge, annealed, galvanized, steel wire run through a suitable length of new reinforced one-half inch (1/2") rubber hose, or approved equal, as directed by the Engineer. Stakes shall be set parallel to the contours, curbs, or walks unless otherwise directed by the Engineer. Staking shall be as follows:

Minor trees over three (3') feet and less than ten (10') feet in height shall be supported by two (2) stakes five feet (5') long in accordance with the plans and specifications or as directed by the Engineer.

Major trees less than three and one-half (3 1/2") inches in caliper shall have two (2) stakes eight feet (8') long with a minimum stake diameter of three inches (3").

Major trees four (4") inches in caliper shall have three (3) stakes ten feet (10') long with a minimum stake diameter of three inches (3").

Major trees between four (4") inches and six (6") inches in caliper shall be staked as directed by the Engineer.

Stakes, wires, hoses and guying shall be removed at the end of the guarantee period unless otherwise directed by the Engineer.

Spraying with Anti-Desiccant: When directed by the Engineer, the Contractor shall spray all Plant Material with an anti-desiccant, using an approved power sprayer to apply an adequate film over trunks, branches, twigs, and/or foliage, as directed by the Engineer. The anti-desiccant shall be an emulsion which will provide a protective film over plant surfaces, permeable enough to permit transpiration. The anti-desiccant shall be Hydrotec100, by Botanical Security Products Co., New York, NY; ArborGuard as manufactured by SavATree, Bedford Hills, NY; or Wilt Pruf, NCF, as manufactured by Nursery Specialties Products, Greenwich, CT; or approved equal. Anti-desiccants shall be delivered in containers of the manufacturer, shall be mixed according to directions, and applied to plant material within forty-eight (48) hours of each day's planting that is completed.

Edging of Planting Areas: The Contractor shall establish a neat edge where planting areas meet grass areas as shown on the plan or as directed by the Engineer. Edging shall be done by

competent mechanics in a professional manner with a spade or edging tool immediately after all planting is completed. Particular care shall be exercised in edging to establish good flowing curves as shown on the plans or as directed by the Engineer. Edging shall be maintained by the Contractor.

MAINTENANCE: The Contractor shall maintain areas within the drip line of all transplanted plant material within the limits of this contract in accordance with the plans and specifications and directions of the Engineer through the Guarantee period specified in Schedule A.

The Contractor shall submit for approval a proposed maintenance schedule specifying workers, materials, and equipment required to comply with maintenance provisions. The proposed schedule shall commence three (3) weeks from the date of Substantial Completion.

Maintenance shall be defined as watering, weeding, cultivating; pruning; spraying with anti-desiccant (where directed by the Engineer), adjustments and replacement of stakes, anchors and wires; repair of minor washouts and gullies up to twelve (12") inches in depth; and other horticultural operations necessary for the proper growth of all plants and for keeping the entire area within the contract limits neat in appearance.

The maintenance period shall extend from May 1st to October 15th and maintenance shall be repeated at least every three (3) weeks. Dead, dying, or undesirable plants shall be removed during this period at the direction of the Engineer. Under no conditions shall weeds be allowed to grow more than six (6") inches in height. The cost of maintenance shall be included in the prices bid.

REPLACEMENT: The Contractor shall replace, in accordance with the contract plans and specifications, any transplanted plant material that is dead or, in the opinion of the Engineer, in an unhealthy or unsightly condition, and/or have lost their natural shape due to dead branches, excessive pruning, inadequate or improper maintenance, in the next planting season. There shall be a guarantee on plant material commencing after the Substantial Completion and the completion of the whole work of this contract. The duration of the guarantee period is set in Schedule A. When instructed by the Engineer, plant material that has died after final acceptance shall be replaced in the next appropriate planting season, even when the next planting season falls outside the one year period.

Names for Replaced Material: Plant names, size, and grading standards shall conform to those prepared by the American Association of Nurserymen Horticultural Standards, 2004 Edition, unless otherwise specified. No substitution shall be permitted, except with the written permission of the Engineer. Replacement trees shall be between two and one half (2 1/2”) inches and three and one half (3 1/2”) inches caliper (regardless of transplanted tree size), and be the same species as the transplanted tree unless otherwise directed. The Engineer must be consulted to select a replacement species where transplanted tree is an ALB host species within quarantine zone.

Where vandalism or related causes are agreed by the Engineer as the cause for transplanted plant material death, the Contractor shall not be responsible for replacement during the guarantee period after final acceptance.

Where dead plant material has been identified, whether due to natural causes or vandalism, the Contractor shall remove the dead material, including stakes, and wire (if applicable) within three (3) weeks of notification.

At the expiration of the guarantee period, unless specifically directed by the Engineer, the Contractor shall leave the entire area cultivated and weed free and shall remove all stakes and wires. All saucers in seeded or sodded areas shall be leveled and seeded with the appropriate mix under the direction of the Engineer.

FINAL ACCEPTANCE: The Contractor shall be liable for any damages to property by transplanting operations and all areas and construction disturbed shall be restored to their original condition, to the satisfaction of the Engineer.

SUBMITTALS: All submittals shall be as per the S-Pages. The Contractor shall submit the following for review and approval prior to performing work:

State Certification (in quarantine zone only) where applicable: The Contractor must submit a copy of a valid Compliance Agreement issued by the State of New York Department of Agriculture and Markets, Division of Plant Industry.

MEASUREMENT AND PAYMENT: The quantity of **TRANSPLANT TREE UP TO 4" CALIPER** and **TRANSPLANT TREE OVER 4" TO 6" CALIPER** to be paid for under these items shall be the number of trees transplanted and maintained in accordance with the plans and specifications, to the satisfaction of the Engineer.

The price bid shall be a unit price for **EACH TRANSPLANT TREE UP TO 4" CALIPER** and each **TRANSPLANT TREE OVER 4" TO 6" CALIPER** and shall include the cost of unclassified and/or hand excavation of plant pits, ball and burlap operation, transplanting, pruning, slow-release fertilizer tablets mycorrhizal inoculant, anti-desiccant, shredded bark mulch, staking, watering, replacing, and maintaining all transplanted trees, and all other work incidental thereto in accordance with the plans and specifications, to the satisfaction of the Engineer.

Topsoil For New Planting Pits and Beds and Tree Growth Regulator, where required and as directed by the Engineer, shall be paid for separately under their respective contract items.

Item No.	Item	Pay Unit
PK-ESCR 140	TRANSPLANT TREE UP TO 4" CALIPER	EA
PK-ESCR 140B	TRANSPLANT TREE OVER 4" TO 6" CALIPER	EA

END OF SECTION

SECTION PK-ESCR 148 – GEOTEXTILE - DRAINAGE

PK-ESCR 148.1 WORK: Under this Item, the Contractor shall furnish and install GEOTEXTILE - DRAINAGE in accordance with the plans and specifications, as directed by the Engineer.

PK-ESCR 148.2 MATERIALS:

GEOTEXTILE - DRAINAGE: Drainage application is defined as a soil to geotextile system that allows for long-term, adequate liquid flow normal to the geotextile with limited soil loss across the plane of the geotextile.

Fibers used in the manufacture of drainage geotextiles, and the threads used in joining geotextiles by sewing, shall consist of long-chain, synthetic polymers, composed of at least 95 percent by weight polyolefins, polyesters, or polyamides. They shall be formed into a stable network such that the filaments or yarns retain their dimensional stability relative to each other, including selvages. The geotextile shall have no tears or defects which adversely alter its physical properties. Geotextiles used in drainage applications shall be Class 2 and shall conform to the following AASHTO-M-288 properties for drainage geotextiles:

		Insitu Soil requirements-% passing through a Standard No. 200 US sieve					
Property	ASTM Test	Less than 15%		15% to 50%		Greater than 50%	
Structure		Woven	Non-Woven	Woven	Non-Woven	Woven	Non-Woven
Elongation	ASTM D4632	<50%	>=50%	<50%	>=50%	<50%	>=50%
Grab Strength (Min.)	ASTM D4632	1100N (247 LBF)	700N (157 LBF)	1100N (247 LBF)	700N (157 LBF)	1100N (247 LBF)	700N (157 LBF)
Tear Strength (Min.)	ASTM D4533	400N (90 LBF)	250N (56 LBF)	400N (90 LBF)	250N (56 LBF)	400N (90 LBF)	250N (56 LBF)
CBR Puncture (Min.)	ASTM D6241	4000N (900 LBF)	1820N (410 LBF)	4000N (900 LBF)	1820N (410 LBF)	4000N (900 LBF)	1820N (410 LBF)
Permitivity (Min.)	ASTM D4491	0.51/sec.		0.21 / sec.		0.11 / sec.	

Apparent Opening Size (Max.)	ASTM D4751	0.43 mm (0.01645 inch) Std No. 40 sieve	0.25 mm (0.0098 inch) Std. No. 60 sieve	0.22 mm (0.0083 inch) Std. No. 70 sieve

Geotextiles shall be FX-60HS (nonwoven) as manufactured by Carthage Mills, Cincinnati, OH, or 160N (nonwoven) by Mirafi, Inc., Pendergrass, GA, or TerraTex N06 (nonwoven) by Hanes Geo Components, Winston Salem, NC, approved equal. Contractor shall submit product data showing that the proposed geotextile is suitable for the soil condition on site.

DELIVERY AND STORAGE: Each geotextile roll shall be wrapped with a material that will protect the geotextile, including the ends of the roll, from damage due to shipment, water, sunlight, and contaminants. The protective wrapping shall be maintained during periods of shipment and storage. During storage, geotextile rolls shall be elevated off the ground and adequately covered to protect them from the following: site construction damage, precipitation, extended ultraviolet radiation including sunlight, chemicals that are strong acids or strong bases, and any environmental condition that may damage the physical property values of the geotextile.

PK-ESCR 148.3 INSTALLATION: The geotextile shall be installed on ground free of objects which may tear or damage the fabric. Install geotextile at elevations and alignments as indicated on the drawings or as directed by the Engineer. The drainage geotextile shall be placed loosely with no wrinkles or folds. Care will be taken to place the geotextile in intimate contact with the soil so that no void spaces occur between the geotextile and trench or ground. Where the geotextile is to be installed in a trench, the geotextile shall be overlapped at the top of the trench, twelve (12”) inches or the full width of the trench, whichever is less.

If the geotextile is damaged during installation, the rupture shall be removed and the damaged area shall be covered with a patch of new fabric which will overlap the undamaged fabric approximately six (6”) inches in all directions. All repaired fabric surface costs will be deemed part of the price bid.

PK-ESCR 148.4 SUBMITTALS:

Manufacturer’s Data: The Contractor shall submit manufacturer’s data with sufficient detail to demonstrate compliance with the requirements of this specification. Contractor must examine soil condition on site and select the appropriate geotextile to submit and to use for the site.

Samples: The Contractor shall furnish two (2) labeled samples, six inch by six inch (6” x 6”) minimum, of the geotextiles intended for use in the work for approval and the Engineer’s use. The label shall include the manufacturer’s product name, the type of fabric, and the weight of grade of the material. Geotextiles used in the work shall conform to the approved samples.

Soil Testing for Large Quantities: Where quantity of Geotextile - Drainage exceeds four hundred and fifty (450) square yards and as directed by the Engineer, the Contractor shall pay for soil testing of existing soil prior to the selection and submittal of the specific geotextile. The Contractor shall furnish a certified report by an approved Materials Testing Laboratory showing the in-situ soil condition. Contractor shall submit to the Engineer the result of the sieve analysis indicating percent passing through a standard No. 200 US Sieve along with the Geotextile sample. The grain size analysis of insitu soil shall be in accordance with AASHTO T88. Contractor shall obtain

a minimum of one soil sample per one hundred and fifty (150) square yard of area covered. The Contractor shall bear responsibility for all costs associated with soil laboratory testing.

PK-ESCR 148.5 MEASUREMENT AND PAYMENT: The quantity of **GEOTEXTILE - DRAINAGE** to be paid for shall be the number of **SQUARE YARDS** required, measured in its final position, furnished and installed in accordance with the plans and specifications and the directions of the Engineer.

The price bid shall be a unit price per **SQUARE YARD** of **GEOTEXTILE - DRAINAGE** installed and shall include the cost of furnishing all labor, material, equipment, submittals, soil testing (where directed by the Engineer), and incidental expenses necessary to complete the work in accordance with the plans and specifications and to the satisfaction of the Engineer.

Excavation, topsoil, or borrowed fill shall be paid for separately under their respective contract items.

Payment will be made under:

Item No.	Item	Pay Unit
PK-ESCR 148	GEOTEXTILE - DRAINAGE	S.Y.

END OF SECTION

SECTION PK-ESCR 149 – GEOTEXTILES – SEPARATION, STABILIZATION

WORK: Under these Items, the Contractor shall furnish and install **GEOTEXTILE - SEPARATION** and/or **GEOTEXTILE - STABILIZATION** in accordance with the plans and specifications, as directed by the Engineer.

MATERIALS:

Fibers used in the manufacture of geotextiles, and the threads used in joining geotextiles by sewing, shall consist of long-chain, synthetic polymers, composed of at least 95 percent by weight polyolefins, polyesters, or polyamides. The geotextile and the threads used in sewing geotextiles, shall be resistant to chemical attack, rot, and mildew. The geotextile shall have no tears or defects which adversely alter its physical properties. They shall be formed into a stable network such that the filaments or yarns retain their dimensional stability relative to each other, including selvages. The geotextile shall have no tears or defects which adversely alter its physical properties. The separation and stabilization applications shall be as specified below:

GEOTEXTILE - SEPARATION APPLICATION: Separation application is defined as the placement of a flexible porous geotextile between dissimilar materials so that the integrity and functioning of both materials can be maintained or improved, but where water seepage through used in separation applications shall conform to the following AASHTO-M-288 properties for separation geotextiles:

Structure	ASTM Test	Woven	Non-Woven
Elongation	D4632	< 50%	≥ 50%
Grab Strength (Minimum)	D4632	1100 N (247 LBF)	700 N (157 LBF)
Tear Strength (Minimum)	D4533	400 N (90 LBF)	250N (56 LBF)
CBR Puncture (Minimum)	D4833	4000 N (900 LBF)	1820 N (410 LBF)
Permitivity (Minimum)	D4491	0.02 / sec.	0.02 / sec.
Apparent Opening Size (Maximum)	D4751	0.6 mm (0.023 inch) Std. No. 30 sieve	0.6 mm (0.023 inch) Std. No. 30 sieve

Geotextile used in separation applications shall be FX-66 (woven) or FX-60HS (nonwoven) manufactured by Carthage Mills, Cincinnati, OH, or 600X (woven) or 160N (nonwoven) as manufactured by Mirafi, Inc., Pendergrass, GA, or TerraTex HD (woven) or TerraTex N06 (nonwoven) as manufactured by Hanes Geo Components, Winston Salem, NC or approved equal.

GEOTEXTILE - STABILIZATION APPLICATION: Stabilization application is utilized in wet, saturated conditions to provide the coincident functions of separation and filtration. In some installations, the geotextile can also provide the function of reinforcement. The stabilization application is appropriate for subgrade soils that are saturated due to a high groundwater table or due to prolonged periods of wet weather. Geotextiles used in stabilization applications shall conform to the following AASHTO M-288 properties for stabilization geotextiles:

Structure	ASTM Test	Woven	Non-Woven
Elongation	D4595	< 50%	≥ 50%
Grab Strength (Minimum)	D4632	1400 N (315 LBF)	900 N (205 LBF)
Tear Strength (Minimum)	D4533	500 N (112 LBF)	360 N (80 LBF)
CBR Puncture (Minimum)	D6241	4000 N (900 LBF)	1820 N (410 LBF)
Permitivity (Minimum)	D4491	0.05 / sec.	0.05 / sec.
Apparent Opening Size (Maximum)	D4751	0.43 mm (0.0165 inch) Std. No. 40 sieve	0.43 mm (0.0165 inch) Std. No. 40 sieve

Geotextile used in stabilization applications shall be FX66 (woven) or FX80-HS (nonwoven) manufactured by Carthage Mills, or 600X(woven) manufactured by Mirafi, Inc. or TerraTex HD (woven) manufactured by Hanes Geo Components, or approved equal.

INSTALLATION: For separation and stabilization applications the ground shall be prepared by removing stumps and other organic material, along with any large boulders and sharp objects which may tear or damage the fabric. After the ground has been prepared, the fabric shall be rolled directly on the ground. All seams shall be overlapped approximately six (6") inches. No equipment, materials or machinery shall be placed on or be transported over exposed fabric. Topsoil backfill or other clean fill shall then be carefully placed to prevent dislocation of the fabric.

If the fabric is damaged during installation, the rupture shall be removed and the damaged area shall be covered with a patch of new fabric which will overlap the undamaged fabric approximately six (6") inches in all directions. All repaired fabric surface costs will be deemed part of the price bid.

SUBMITTALS: All submittals shall be submitted prior to purchase and in accordance with the requirements of the S-Pages.

Manufacturer's Data: The Contractor shall submit manufacturer's data with sufficient detail to demonstrate compliance with the requirements of this specification.

Samples: The Contractor shall furnish two labeled (2) samples, six inch by six inch (6" x 6") minimum, of the geotextiles intended for use in the work for approval and the Engineer's use. The label shall include the manufacturer's product name, the type of fabric, and the weight of grade of the material. Geotextiles used in the work shall conform to the approved samples.

MEASUREMENT AND PAYMENT: The quantity of Geotextiles to be paid for shall be the number of **SQUARE YARDS** of **GEOTEXTILE - SEPARATION** and **GEOTEXTILE - STABILIZATION** required, measured in its final position, furnished and installed in accordance with the plans and specifications and the directions of the Engineer.

The price bid shall be a unit price per **SQUARE YARD** of each type of Geotextile installed and shall include the cost of furnishing all labor, material, equipment, submittals, and incidental expenses necessary to complete the work in accordance with the plans, specifications, and to the satisfaction of the Engineer.

Excavation, topsoil, or borrowed fill shall be paid for separately under their respective contract items.

Item No.	Item	Pay Unit
PK-ESCR 149	GEOTEXTILES–SEPARATION	S.Y.
PK-ESCR 150	GEOTEXTILES–STABILIZATION	S.Y.

END OF SECTION

SECTION PK-ESCR 152 – BENCH, 1964 WF RPL SLATS

WORK: Under this Item, the Contractor shall furnish and install **BENCH, 1964 WORLD'S FAIR W/ RPL SLATS** in accordance with the plans, specifications, and directions of the Engineer.

BENCH DESIGN: In general, 1964 World's Fair Bench standard detail (originally designed for wood slats) shall be followed except that recycled plastic lumber (RPL) slats shall have an unsupported span no greater than two feet six inches (2'-6"). Overhang shall not exceed three (3") inches. Steel supports shall be installed to adequately support the plastic slats. All standards shall have arms, unless otherwise shown on contract plans. The 1964 World's Fair bench shall be manufactured by Kenneth Lynch and Sons, Oxford, CT, Kevin G. Lindelow Quality Site Furnishings, Frenchtown, NJ, All City Play Equipment, Inc., Metuchen, NJ, or approved equal.

MATERIALS: Unless otherwise herein specified, all materials and methods of construction shall conform to the requirements of the NYCDOT Standard Highway Specifications.

STANDARDS: Bench standards shall be of cast ductile iron. The tensile strength shall meet a minimum of 65,000 psi, in accordance with ASTM designation A536, Grade 65-45-12.

Standards shall be hot dipped galvanized in accordance with ASTM A153. Any resulting dimples or sharp points shall be ground smooth.

Steel Supports: Steel supports for recycled plastic lumber shall be hot-rolled carbon steel flat bars and channels of the sizes indicated on the drawings and secure to the plastic slats with vandal resistant screws. All steel supports shall be hot dipped galvanized or stainless steel as per this specification.

Touch-up and Repair: For minor damage caused by grinding, installation or transportation, touchup galvanized finish in conformance with manufacturer's recommendations. Provide touch-up such that repair is not visible from a distance of six (6') feet.

BENCH SLATS – RECYCLED PLASTIC LUMBER: All slats for benches shall be fabricated from at least ninety percent (90%) post-consumer recycled plastic, dimensions as indicated on the plans. Recycled plastic lumber shall be Selectforce as manufactured by Bedford Technology, LLC Worthington, MN, PolyTuf™ as manufactured Tangent Technologies, LLC, Aurora, IL, or approved equal. Color to be Cedar, Brown or Weathered Wood unless otherwise indicated on the plans.

Recycled plastic lumber shall comply with or be tested in accordance with the following.

ASTM D6108 Standard Test Method for Compressive Properties of Plastic Lumber and Shapes

ASTM D6109 Standard Test Method for Flexural Properties of Unreinforced and Reinforced Plastic Lumber

ASTM D6111 Standard Test Method for Bulk Density and Specific Gravity of Plastic Lumber and Shapes by Displacement

ASTM D6112 Standard Test Methods for Compressive and Flexural Creep and Creep Rupture of Plastic Lumber and Shapes

ASTM D6117 Standard Test Methods for Mechanical Fasteners in Plastic Lumber and Shapes

ASTM D1248 Standard Specifications for Polyethylene Plastics Extrusion Materials for Wire and Cable

Recycled Plastic Lumber shall be fabricated primarily from recycled High Density Polyethylene (HDPE) and recycled Low Density Polyethylene (LDPE). HDPE resins shall meet the requirements of ASTM D1248 for Type III or IV (high density), Grade G7. Lumber shall contain no toxic materials, but shall contain UV-inhibited pigments. Composition and mechanical properties shall be as follows: Minimum Recycled Content 90%

Minimum High Density Polyethylene 70%
Maximum Percentage of Materials other than Polyolefins 5%
Minimum Specific Gravity (ASTM D6111) 0.02 lbs-in3
Minimum Flexural Modulus (ASTM D6109) 85,000 psi
Minimum Screw Pull-out Strength (ASTM D6117) 700 lbs

Flame Spread, Class C or better, tested in accordance with ASTM E84.

Coefficient of Thermal Expansion (ASTM D6341), in the range of -10 degrees C to 30 degrees C, shall not exceed 70 x 10-6 degrees F.

Recycled Plastic Lumber shall not absorb moisture, corrode, rot, warp, splinter, or crack and shall not contain fiberglass or any material that will be irritating in contact with skin.

Fabrication Tolerances: Ends shall be smooth with clean cuts. Cross-sections shall not have voids greater than ½" dia. Voids of ½" dia. Or less shall be filled as per manufacturer's specifications. All edges shall have ¼" radius. Maximum variation from flat surface across section shall be 1/8".

Delivery and Storage: Keep recycled plastic lumber protected at all times against exposure to extreme heat or impact. All material shall be bundled and fully supported during shipping and storage to prevent creep. Any lumber that is damaged or excessively scratched will be rejected and replaced with new. All material must be straight and true when placed in the construction.

Hardware: Bolts, locknuts, and washers used to secure slats to standards shall be stainless steel or hot dipped galvanized. Bolt or wood screw used for mid section steel support strap (RPL only) shall be a vandal resistant type, either stainless steel or hot-dipped galvanized. Type and dimensions of all bolts, nuts, and washers shall be as indicated on the plans. Anchor bolts used to secure the benches to pavements may be either stainless steel or hot-dipped galvanized steel. Bolts for securing slats shall be provided with nylon lock nuts so as to render the connection vandal resistant.

Concrete: Concrete for slabs or footings shall be ", " class B-32 per the NYCDOT Standard Highway Specifications *Section ESCR-4.06* and shall be of the dimensions indicated on the plans.

ASSEMBLY AND INSTALLATION: Benches shall be pre-assembled before being installed in their final location and properly secured in place by anchor bolts drilled into concrete footings or slab, as indicated on the plans.

SUBMITTALS: All submittals shall be in accordance with the requirements of the S-Pages.

Shop Drawings: The Contractor shall submit Shop Drawings showing adequate number of supports and armrests required specifically for recycled plastic lumber design.

Foundry Certificates: Certifying Ductile Iron used in bench standards shall be submitted. The certificate shall be on foundry letterhead, dated and signed by the manufacturer with the Contract No., Contractor name, and Class of Ductile Iron provided.

Sample: The Contractor shall submit a twelve inch (12") sample of the recycled plastic lumber slat for surface and color approval. Required test results shall be submitted if an approved equal manufacturer is proposed.

MEASUREMENT AND PAYMENT: The quantity of **BENCH, 1964 WORLD'S FAIR W/ RPL SLATS** to be paid for under this item shall be the number of **LINEAR FEET** of bench measured in place along the top slat, installed in accordance with the plans, specifications, and directions of the Engineer.

The price bid shall be a unit price per **LINEAR FOOT of BENCH, 1964 WORLD'S FAIR W/ RPL SLATS** furnished and installed and shall include the cost of all labor, materials, equipment, and incidental expenses necessary, including hardware, anchors, recycled plastic lumber (R.P.L.), galvanized ductile iron standards, certificates, and submittals, all in accordance with the plans and specifications, to the satisfaction of the Engineer.

Excavation and Concrete for slabs or piers shall be paid for separately under their respective contract items.

Item No.	Item	Pay Unit
PK-ESCR 152	BENCH, 1964 WORLD'S FAIR W/ RPL SLATS W / ARMS, 4' LENGTH	L.F.
PK-ESCR 721	BENCH, 1964 WORLD'S FAIR W/ RPL SLATS, BACKLESS, 8' LENGTH	L.F.
PK-ESCR 722	BENCH, 1964 WORLD'S FAIR W/ RPL SLATS W / ARMS, 8' LENGTH	L.F.

END OF SECTION

SECTION PK-ESCR 155 – BENCH, TYPE C (SPORTS)

WORK: Under these Items, the Contractor shall furnish and install **BENCH, TYPE 'C' (SPORTS) W/ RPL SLATS – BACKLESS** as shown on the plans, herein specified, or as directed by the Engineer. Unless otherwise noted, benches shall conform to DPR Standard Details.

MATERIALS: Unless otherwise herein specified, all materials and methods of construction shall conform to the requirements of shall meet the requirements of the NYCDOT Standard Highway Specifications.

Benches shall be manufactured by All City Play Equipment, Metuchen, NJ or approved equal.

BENCH STANDARDS: The bench standards shall be made up of galvanized and powder coated steel tubular supports and channel seat frames. Where the standards are to be set in concrete slabs, the tubular supports shall be provided with base angles. The steel tubular supports shall be continuously welded to the seat channel and the base angle as indicated on the Standard Detail. The standards shall be hot dipped galvanized in accordance with ASTM A123 or receive an approved equal corrosion resistant treatment.

Corrosion Resistant Treatment: All fabrication and welding shall be completed prior to application of the corrosion resistant coating, metal pieces shall be cleaned of all weld spatter, mill scale, varnish, rust, grease, and the like and the surface mechanically or chemically prepared to receive the coating. This corrosion resistant coating shall be either hot-dip galvanizing or a thermal spray zinc coating with a minimum thickness of 3 mils or a multi-step iron phosphate bath coating process.

Powdercoating: The steel tubular supports shall be powdercoated with a polyester thermosetting powdercoating. Color shall be Black, unless otherwise indicated on contract plans. Powdercoating shall be applied to the metal in such a manner that the coating will not peel off. Ensure that surfaces to be coated are clean and dry and free of grease, dust, rust, etc.

Powdercoating shall be applied at a film thickness of 3 to 4 mils by electrostatic spray process and bake finished per the manufacturer's directions. It shall be applied without voids, tears or cuts that reveal the substrate and shall thoroughly adhere to the metal without peeling when scratched with a pick device or knife blade point. All visible nuts, washers, and ends of all bolts shall be painted with touchup paint as described below.

Touchup and Repair: For minor damage caused by installation or transportation, touchup finish in conformance with manufacturer's recommendations. Provide touchup such that repair is not visible from a distance of six (6') feet.

Laboratory Test For TGIC-Polyester Powdercoat: At the discretion of the Engineer, a sample TGIC-Polyester powdercoated bench standard may be laboratory tested for bonding of the powdercoating to the metal. Test shall be the Cross Hatch test per ASTM D3359, Method B. Failure to satisfactorily pass this test shall be a basis for rejection.

BENCH SLATS: All slats shall be recycled plastic lumber (RPL) and not absorb moisture, corrode, rot, warp, splinter, or crack and shall not contain fiberglass or any material that will cause irritation when in contact with skin. Warped or deflected slats shall not be accepted.

Recycled Plastic Lumber: All slats for benches shall be fabricated from at least ninety percent (90%) post-consumer recycled plastic, dimensions as indicated on the plans. Recycled plastic lumber shall be as Ecoboard manufactured by Trelleborg Marine Systems, Clearbrook, VA, or PolyTuf™ manufactured Tangent Technologies LLC, Aurora, IL or

approved equal. Color to be Cedar unless otherwise indicated on the plans.

Recycled plastic lumber shall comply with or be tested in accordance with the following.

ASTM D6108	Standard Test Method for Compressive Products of Plastic and Shapes
ASTM D6109	Standard Test Method for Flexural Properties of Unreinforced and Reinforced Plastic Lumber
ASTM D6111	Standard Test Method for Bulk Density and Specific Gravity of Plastic Lumber and Shapes by Displacement
ASTM D6112	Standard Test Methods for Compressive and Flexural Creep and Creep Rupture of Plastic Lumber and Shapes
ASTM D6117	Standard Test Methods for Mechanical Fasteners in Plastic Lumber and Shapes
ASTM D1248	Standard Specifications for Polyethylene Plastics

Recycled Plastic Lumber shall be fabricated primarily from recycled High Density Polyethylene (HDPE) and recycled Low Density Polyethylene (LDPE). HDPE resins shall meet the requirements of ASTM D1248 for Type III or IV (high density), Grade G7. Lumber shall contain no toxic materials, but shall contain UV-inhibited pigments. Composition and mechanical properties shall be as follows:

Minimum Recycled Content	90%
Minimum High Density Polyethylene	70%
Maximum Percentage of Materials other than Polyolefins	5%
Minimum Specific Gravity (ASTM D6111)	0.02 lbs-in3
Minimum Flexural Modulus (ASTM D6109)	85,000 psi
Minimum Nail Pull-out Strength (ASTM D6117)	700 lbs

Flame Spread, Class C or better, tested in accordance with ASTM E84.

Coefficient of Thermal Expansion (ASTM D6341), in the range of -10C to 30C, shall not exceed 70 x 10-6/F.

Recycled Plastic Lumber shall not absorb moisture, corrode, rot, warp, splinter, or crack and shall not contain fiberglass or any material that will be irritating in contact with skin.

Fabrication Tolerances: Ends shall be smooth with clean cuts, cross-sections shall not have voids greater than 1/2" dia. Voids of 1/2" dia. or less shall be filled with a matching color of silicone caulk, as per manufacturer's specifications. All edges shall be eased. Maximum variation from flat surface across section shall be 1/8".

Delivery and Storage: Keep materials protected at all times against exposure to extreme heat or impact. All material shall be bundled and fully supported during shipping and storage to prevent creep. Any lumber that is damaged or excessively scratched will be rejected and replaced with new. All slat material must be straight and true when bolted to the standards.

HARDWARE: All hardware shall be stainless steel. Slats shall be attached to bench standards with 3/8" diameter carriage bolts with a 3/8" lock washer and a 3/8" nut.

CONCRETE: Concrete for slabs or footings shall be Concrete for park structures class B-32 per the NYCDOT Standard Highway Specifications, *Section ESCR-4.06* and shall be of the dimensions indicated on the plans.

INSTALLATION: The bench standards shall be set in concrete slabs or footings with supports vertical and true to line and position, as shown on the plans or as directed by the Engineer.

The slats shall be secured to the channel frames with vandal-resistant bolts of 18-8 Stainless Steel as indicated on the Standard Detail. Ends of all bolts shall be peened and filed smooth after tightening.

SUBMITTALS: All submittals shall be submitted prior to manufacture and in accordance with the requirements of the S-Pages.

Shop Drawings: Shop Drawings shall be submitted for approval by the Engineer. Shop Drawings will not be required if benches are fabricated in strict accordance with the details indicated on the Contract Drawings.

Recycled Plastic Lumber: The following tests shall be provided if the Contractor proposes an approved equal slat material.

1. ASTM D6108 - Compression Properties
2. ASTM D6109 - Flexural Properties
3. ASTM D6111 - Density tests
4. ASTM D6112 - Creep tests
5. ASTM D6117 - Mechanical Fasteners
6. ASTM D1248 - Standard Specifications for Polyethylene Plastics
7. ASTM E84 - Flame Spread

Sample: The Contractor shall submit a twelve inch (12") sample of the reinforced recycled plastic lumber slat for surface and color approval.

MEASUREMENT AND PAYMENTS: The quantity of **BENCH, TYPE 'C' (SPORTS) W/ RPL SLATS - BACKLESS** to be paid for under these Items shall be the number of **LINEAR FEET**, of each type, measured along the top slat, installed in accordance with the plans, specifications, and directions of the Engineer.

The prices bid shall be a unit price per **LINEAR FOOT of BENCH, TYPE 'C' (SPORTS) W/ RPL SLATS – BACKLESS** installed, and shall include the cost of all labor, materials, equipment and all incidental expenses necessary to complete the work, including steel standards, slats, hardware and powder coating, all in accordance with the plans, specifications, and directions of the Engineer.

Excavation, Concrete Pavement or concrete for park structures for piers will be paid for separately under their respective contract Items.

Item No.	Item	Pay Unit
PK-ESCR 155	BENCH, TYPE 'C' (SPORTS) W/RPL SLATS, BACKLESS	L.F.

END OF SECTION

SECTION PK-ESCR 156 – BICYCLE RACK – HOOP

WORK: Under this Item, the Contractor shall furnish and erect BICYCLE RACK - "HOOP" in accordance with the plans, specifications, and directions of the Engineer.

INTENT: This specification is intended for bicycle rack installation within NYC Parks property as well as the Public Right of Way under the jurisdiction of NYCDOT, but ordering procedure varies as described below.

MATERIALS: Unless otherwise specified herein, all materials and methods of construction shall conform to applicable portions of the NYCDOT Standard Highway Specifications.

Bicycle Rack – "Hoop": The bicycle rack shall be the NYCDOT – NYCityRack, a trademarked design of the City of New York. The bicycle rack is constructed of cast ductile iron ASTM grade A536.

NYCDOT owns the intellectual property rights to the CityRack design. The NYCDOT contractually authorized manufacturer is Campbell Foundry Company, Harrison, NJ or the latest authorized manufacturer/supplier, as applicable.

No order can take place without authorization from the Engineer, in consultation with NYCDOT Director of CityRacks. The Director of the CityRacks Unit will issue an authorization letter so the Contractor may purchase CityRacks. Contractors will place orders with NYCDOT's authorized manufacturer/supplier only.

ORDERING PROCEDURE: Contractor shall contact the Director of City Racks for bid prices and to receive a purchase authorization letter. The Contractor shall supply the following information to the Director of City Racks a minimum of two months but no earlier than six months prior to desired delivery date:

FOR INSTALLATIONS ON PARK PROPERTY:

1. Contractor shall e-mail the number of CityRack units to be purchased for installation on Parks Property (verify that none will be installed on Public Right of Way), and
2. Provide the name of the Contractor, name of the Park, Park location and Parks contract number, and
3. Copy the Engineer in such e-mail.

FOR INSTALLATIONS ON PUBLIC RIGHT OF WAY:

1. Contractor shall e-mail the number of CityRack units to be purchased for installation on the Public Right of Way sidewalk (verify that none will be installed on Parks Property), and
2. Submit layout plan, marking exact location on sidewalk where bike rack(s) are shown using a thick pencil or marker and
3. Provide the name of the Contractor, name of the Park, Park location and Parks contract number, and
4. Copy the Engineer in such e-mail.

NYC-Department of Transportation
Director of City Racks, Bike Parking / Public Space Unit
Transportation Planning & Management
55 Water Street, 6th Floor | New York, New York 10041
Kenneth Lewis, Director Klewis@dot.nyc.gov (212) 839.7241 Office phone

Hardware: Mushroom head spikes for surface mount shall be either stainless steel, of the sizes shown on the Detail. Spikes will be provided by the manufacturer.

Concrete: Concrete pavement or piers shall be installed as shown on contract drawings.

EXECUTION: All Bicycle Racks shall be installed in locations as shown on the contract plans. Bicycle rack layout and details shall be as shown on the contract drawings.

Surface Mount: Bicycle rack shall be installed in their final location and properly secured in place. Holes shall be drilled into the concrete, in accordance with the detail. Base plate shall be secured with four (4) mushroom head spikes driven into the pre-drilled hole.

SUBMITTALS: All submittals shall be in accordance with the requirements of the S-Pages.

Contractor shall submit authorization letter from NYCDOT.

MEASUREMENT AND PAYMENT: For furnishing and installing **BICYCLE RACK - "HOOP"** complete in accordance with the plans and specifications and directions of the Engineer, the Contractor shall receive the unit price bid.

The price bid shall be a unit price for **EACH** Bicycle Rack - "Hoop" and shall include the cost of all labor, materials, equipment and incidental expenses necessary to complete the work including obtaining purchase authorization letter, hardware, all in accordance with the plans and specifications to the Satisfaction of the Engineer.

Excavation and concrete shall be paid for separately under their respective contract items.

Item No.	Item	Pay Unit
PK-ESCR 156	BICYCLE RACK – "HOOP"	EA

END OF SECTION

SECTION PK-ESCR 158 – PICNIC TABLE FIXED

WORK: Under these items, the Contractor shall furnish and install **PICNIC TABLE -FIXED** and **PICNIC TABLE -FIXED/ACCESSIBLE** with bench sets in accordance with the plans, specifications and directions of the Engineer.

MATERIALS: Unless otherwise specified herein, all materials and methods of construction shall conform to applicable portions of the NYCDOT Standard Highway Specifications. The Picnic Table shall be manufactured by All City Play Equipment, Metuchen, NJ, or approved equal.

CONCRETE: Concrete piers or pavement shall be 3,200 psi average class B-32 concrete per the NYCDOT Standard Highway Specifications as shown on the plans and as directed by the Engineer.

STANDARDS: The picnic table and bench standards shall consist of steel tubular supports and channel seat and table frames. The tubular supports shall be provided with base angles. The steel tubular supports shall be continuously welded to the channels and the base angle as indicated on the plans. The standards shall be galvanized and powder coated after fabrication.

Galvanizing: All steel components shall be hot-dipped galvanized or receive an approved equal corrosion resistant coating prior to powdercoating. An approved equal corrosion resistant coating shall be either a thermal spray zinc coating with a minimum thickness of 3 mils, or a multi-step iron phosphate bath coating process.

Powder Coating: The galvanized picnic table and bench set standards shall be powder coated with a polyester thermosetting powder coating such as manufactured by Tiger Drylac USA, Reading, PA, or approved equal. Color to be gloss black, RAL 8022, unless otherwise indicated on the plans.

Galvanizing of standards shall provide an acceptable substrate for applied powder coatings. No lacquer, urethane or other coatings which would prevent proper adhesion of powder coating shall be applied to the steel.

The powder coating shall be applied to the galvanized standards in such a manner that the coating will not peel off. Ensure surfaces to be coated are clean and dry and free of grease, dust, rust, etc. All coated parts shall first receive phosphating and chromatizing treatments to improve the adhesion of the surface coating.

The TGIC-Polyester shall be applied at a film thickness of 3 to 4 mils by electrostatic spray process and bake finished per manufacturer's directions. The TGIC-Polyester shall be applied without voids, tears or cuts that reveal the substrate and shall thoroughly adhere to the metal without peeling when scratched with a pick device or knife blade point.

Touch-up & Repair: For minor damages caused by installation or transportation, clean damaged area, then:

1. On damaged galvanized surfaces, apply organic zinc repair paint complying with ASTM A780, then repair powder coating per number 2 below. Galvanizing repair paint shall have 65 percent zinc by weight. Thickness of repair paint shall be not less than that required by ASTM A123.
2. On damaged powder coated surfaces, touch-up finish in conformance with manufacturer's recommendations. Provide touch-up such that repair is not visible from a distance of six feet (6').

RECYCLED PLASTIC LUMBER: All slats for table and benches shall be recycled plastic lumber that shall not absorb moisture, corrode, rot, warp, splinter, or crack and shall not contain fiberglass or any material that will be irritating when in contact to the skin.

Recycled plastic lumber shall be manufactured from high and low density plastic with at least ninety (90%) percent of the material to be post-consumer recycled plastic. HDPE resins shall meet requirements of ASTM D1248 for Type III or IV (high density), Grade G7. Recycled plastic lumber shall be manufactured by Bedford Technology LLC, Washington, MN, or approved equal. Color to be DARK GRAY or CEDAR unless otherwise indicated on the plans. Material shall contain no toxic materials. Recycled Plastic Lumber shall contain UV-inhibited pigment.

Composition and mechanical properties shall be as follows:

Minimum Recycled Content		90%
Minimum High Density Polyethylene		70%
Maximum percentage of materials other than polyolefins		5% Minimum
Specific Gravity (ASTM D6111)	0.86	
Minimum Flexural Strength (ASTM D6109)		1,300 psi
Minimum Flexural Modulus (ASTM D6109)		95,000 psi
Minimum Compression Strength (ASTM D6108)		1,400 psi
Minimum Nail Pull-out Strength (ASTM D6117)		500 lbs

Flame Spread, Class C or better, tested in accordance with ASTM E84.

Coefficient of Thermal Expansion (ASTM D6341), in the range of -10C to 30C, shall not exceed 60 x 10-6/F.

Creep performance data (time dependent stress/strain characteristics) shall be submitted in accordance with ASTM D6112, if required.

Fabrication Tolerances: Ends shall be smooth with clean cuts, cross-sections shall not have voids greater than ½" dia. Voids of ½" dia. or less shall be filled as per manufacturer's specifications. All edges shall be eased. Maximum variation from flat surface across section shall be 1/8".

Delivery and Storage: Keep materials protected at all times against exposure to extreme heat or impact. All material shall be bundled and fully supported during shipping and storage to prevent creep. Any lumber that is damaged or excessively scratched will be rejected and replaced with new. All material must be straight and true when placed in the construction.

HARDWARE: All hardware shall be either stainless steel or hot-dipped galvanized. Slats shall be attached to bench standards with 3/8" dia. carriage bolts with 3/8" lock washer and 3/8" nut. Ends of bolts shall be peened.

INSTALLATION: The standards shall be set in concrete with supports vertical and true to line and position as shown on the plans or as directed by the Engineer. Concrete footings shall be installed below pavement so it is not visible at finished grade.

The slats shall be secured to the channel frames with vandal proof bolts as indicated on the plans or approved equal. Ends of all bolts shall be peened and filed smooth after tightening.

SUBMITTALS: All submittals shall be submitted prior to manufacture and in accordance with the requirements of the S-Pages.

Recycled Plastic Lumber: The following tests shall be provided if the Contractor proposes an approved equal manufacturer for recycled plastic lumber:

1. ASTM D6108 - Compression Properties
2. ASTM D6109 - Flexural Properties
3. ASTM D6111 - Density tests
4. ASTM D6112 - Creep tests
5. ASTM D6117 - Mechanical Fasteners
6. ASTM D1248 - Standard Specifications for Polyethylene Plastics
7. ASTM E84 - Flame Spread

Laboratory Test For TGIC-Polyester Powder Coat: At the discretion of the Engineer, a sample TGIC Polyester powder coated standard shall be laboratory tested for bonding of the powder coating to the metal. Test shall be the Cross Hatch test per ASTM D3359, Method B. Failure to satisfactorily pass this test shall be a basis for rejection.

MEASUREMENT AND PAYMENT: The quantity of **PICNIC TABLE -FIXED** and **PICNIC TABLE -FIXED/ACCESSIBLE** to be paid for under these items shall be the number of units furnished and installed in accordance with the plans, specifications and directions of the Engineer

The price bid shall be a unit price for **EACH** Picnic Table -Fixed and for **EACH** Picnic Table Fixed/Accessible and shall include the cost of all labor, materials and equipment including table, benches, steel standards and frames, plastic lumber, hardware, and powder coating and all incidental expenses necessary to complete the work in accordance with the plans and specifications to the satisfaction of the Engineer.

Excavation, concrete for slab or piers shall be paid for separately under their respective contract items. Foundation Material, where required, shall be paid for under the item “Foundation Material For Concrete”.

Item No.	Item	Pay Unit
PK-ESCR 158	**PICNIC TABLE – FIXED**	**EA**
PK-ESCR 718	**PICNIC TABLE – FIXED, ACCESSIBLE, WITH UMBRELLA HOLE**	**EA**
PK-ESCR 719	**PICNIC TABLE – FIXED, ACCESSIBLE**	**EA**
PK-ESCR 806	**PICNIC TABLE – FIXED, WITH UMBRELLA HOLE**	**EA**

END OF SECTION

SECTION PK-ESCR 161 – PUBLIC SPACE RECEPTACLE BINS

WORK: Under this Item, the Contractor shall furnish and install PUBLIC SPACE RECEPTACLE BINS in accordance with the plans, specifications and directions of the Engineer.

MATERIALS: Public Space Receptacles shall be 32 gallon size, and be similar to receptacles available through DCAS Requirements Contract RC/OMPA #3487003 (20141200601) "Public Space Receptacle Bins" as manufactured by Landscape Forms, Inc., Kalamazoo, MI or similar as manufactured by Maglin Site Furniture, Inc, Woodstock, ON or approved equal.

PURCHASING: There are three coordinated receptacles available through the DCAS contract. The **Public Space Trash Receptacle, Public Space MGP** (commingle Metal, Glass, Plastic) **Receptacle** and **Public Space Paper Receptacle** are contractually all identical in price.

Required quantities of each receptacle type are shown on the drawings. The Engineer reserves the right to revise the quantity of each type of receptacle as shown in the chart below, provided that changes are requested in writing by the Engineer prior to the order date. Receptacles must be ordered directly from the manufacturer a minimum of 120 days in advance of expected installation date.

Public Space Trash Receptacle	Landscape Forms, Inc Or approved equal	Maglin Site Furniture, Inc Or approved equal
Model No.	SF 1288-005	CMLWR90740-32-HST
Bin color (Unless otherwise shown on drawing)	Grey RAL #9023	Gunmetal Grey or Graphite
Lid Color	Black	Black
Graphics-Logo	Standard graphics for trash	Standard graphics for trash
Public Space MGP Receptacle	Landscape Forms, Inc Or approved equal	Maglin Site Furniture or approved equal
Model No.	SF 1288-003	CMLWR90740-32-HBC
Lid Color	Blue RAL #5015	Blue RAL #5015
Graphics	Graphics for Metal, Glass, Plastics Recycling	Graphics for Metal, Glass, Plastics Recycling
Public Space Paper Receptacle	Landscape Forms, Inc Or approved equal	Maglin Site Furniture or approved equal
Model No.	SF 1288-001	CMLWR90740-32-HPS
Lid Color	Green RAL #6018	Green RAL #6018
Graphics-Logo	Graphics for Mixed Paper Recycling	Graphics for Mixed Paper Recycling

INSTALLATION: Contractor shall install receptacles in locations as shown on the drawing into pavement with three (3) 3/8" x 4" minimum length, non-corrosive, concrete expansion anchors. Location of trash receptacle shall be as shown on the plans or as determined by the Engineer.

Public Space Receptacle Bins (All)	
Capacity	32 gallons
Lids	Hinged Top Opening
Plastic Liner	Required and Slotted for drainage
Optional lock	Not required
Optional extra key	Not required

SUBMITTALS: shall be submitted in accordance with the requirements of the S-Pages a minimum of 120 days in advance of receptacle installation.

Catalog cut of receptacle(s) with manufacturer name and features included. Submit final quantity of each type of receptacle to be ordered under this Contract. Submit color samples upon request.

MEASUREMENT AND PAYMENT: The quantity of **PUBLIC SPACE RECEPTACLE BINS** to be paid for under this Item shall be the number of receptacles (in any combination) furnished and installed, in accordance with the plans, specifications and directions of the Engineer.

The price bid shall be a Unit Price for **EACH** Public Space Receptacle Bin installed complete, and shall include the cost of furnishing all labor, materials and equipment to complete the work including anchoring receptacle to pavement and providing liner, all in accordance with the Plans and Specifications to the satisfaction of the Engineer.

Item No.	Item	Pay Unit
PK-ESCR 161	PUBLIC SPACE RECEPTACLE BINS	EA

END OF SECTION

SECTION PK-ESCR 170 – STEEL FENCE AND GATES

WORK: Under these Items, the Contractor shall furnish and erect **STEEL FENCES** and **GATES** of the types and sizes shown on the plans, in accordance with the plans, specifications, and directions of the Engineer.

MATERIALS: Unless otherwise specified, the materials shall meet the requirements of the NYCDOT Standard Highway Specifications

FENCES AND GATES shall be constructed of solid bars, posts, and rails of the sizes shown on the plans unless specifically noted as lightweight. All material shall conform to Specification ASTM A36.

FABRICATION- LIGHTWEIGHT GATE (where specified only): Shall be as manufactured by Shannon Gates and Railings, Deer Park, NY, or approved equal and shall be fabricated from 16G square tubing and 1/2" channels.

FABRICATION-STEEL FENCES AND GATES: Fences and Gates shall be fabricated in strict accordance with the plans and approved Shop Drawings. Posts and rails shall be formed into panels of the shapes on the plans and joints completely welded with welds of proper size and shape; all welds ground smooth to a neat finish. Connection shall be provided as indicated on the plans. Welding shall conform to the requirements given in the NYCDOT Standard Highway Specifications.

Posts and pickets shall, in all cases, be truly vertical. Rails and bars shall be parallel to grade as shown on the plans. Panels shall be curved as required by the work. Braces shall be required at two-thirds (2/3) of the way up each post when fence is ten feet (10') high or over.

HINGES: shall be Stanley #BB855, Heavy Duty Steel Ball Bearing Hinge, 5" x 6", as manufactured by Stanley Hardware, New Britain, CT, Shannon Gates and Railings, Deer Park NY or approved equal.

LOCK BOLT- Double Gates: Shall be a drop rod bar arranged to engage the gate stop. Locking device shall be constructed so that the drop rod cannot be raised when the gate is locked. The locking bolt and bolt catch hardware shall be constructed as shown on the standard detail drawings. The locking device shall have provisions for a padlock. All necessary fittings and gate holders to lock gates in both open and closed positions shall be furnished. The locking device shall be as manufactured by Shannon Gates and Railings, Deer Park NY, or an approved equal locking device.

GATE LATCH – Single Gates: Shall be a lockable stirrup type. Latch shall be constructed of steel bars and blocks with a stainless steel pin, as shown on the drawings. The ends of stirrups shall be treated with a heavy-duty flexible, rubberized coating such as Plastidip as manufactured by P.D.I. Inc., Circle Pines, MN, or approved equal.

PADLOCK: The Contractor shall furnish one padlock for each single gate and each leaf of double gates. The padlocks shall be American No. 5571 as manufactured by American Lock Co., Crete, IL., or approved equal. All padlocks for the same park facility shall be keyed alike, with two inch (2") wide by three-quarter inch (3/4") thick brass body, maximum security, five (5) pin tumblers with hardened alloy steel chrome plated shackle no less than three-eighth inch (3/8") diameter and two inch (2") clearance (elongated shackle). A galvanized steel chain, nine inches (9") long shall be fastened to the gate and body of the lock. The chain shall be five-sixteenths inch (5/16") by one and three-eighths inch (1 3/8"). The Contractor shall furnish two (2) keys for each padlock.

CAST IRON PARKS LEAF – Double Gates: The Park Leaf casting shall be as manufactured by Wemco Castings, Bohemia, N.Y, or approved equal. The City, through NYCDPR, retains

exclusive right to the use of the pattern. Leaf castings are to be fabricated from Ductile Iron 65-45-12. The small 9 1/2" leaf shall weigh approximately six pounds (6 lbs.) each. The back of the leaf casting is to be flat and the front face shall be contoured with the veins of the leaf shown in relief. See Contract Drawings for structural details.

Park leaves shall be welded to each leaf of the steel gate in the shop. Field welding will not be permitted.

GROUT: Grout for fence posts shall be non-shrink, cement based grout such as Sonogrout 10K as manufactured by BASF Building Systems, Shakopee, MN or SikaGrout 212, as manufactured by Sika Corporation, Lyndhurst, NJ, or approved equal.

SEALANT: Sealant around fence post shall be one part polyurethane, elastomeric adhesive such as MasterSeal CR 195, as manufactured by BASF Building Systems, Shakopee, MN or Sikaflex1a, as manufactured by Sika Corporation, Lyndhurst, NJ, or approved equal.

PAINTING: The fences and gates shall receive three (3) coats of paint. The first coat shall be shop applied; the second and third coat shall be field applied. Immediately prior to painting, all surfaces of fences and gates shall be thoroughly free of debris. All surfaces that are rust free shall be treated in accordance with SP-1, Solvent Cleaning. Treatment shall be performed with a solvent such as mineral spirits, xylol, or turpentine to remove all dirt, grease, and foreign matter. Surfaces that show evidence of scale and rust shall be cleaned in accordance with SP-2, Hand Tool Cleaning, a method generally confined to wire-brushing, sandpaper, hand scrapers, or hand impact tools or SP-3, Power Tool Cleaning, a method generally confined to power wire brushes, impact tools, power sanders, and grinders in order to achieve a sound substrate. After the fence and gates have been cleaned and prepared, they shall be painted as follows:

First Coat (Shop Applied): D.T.M.(Direct to Metal) Alkyd semi-gloss P24, as manufactured by Benjamin Moore & Co., Montvale, NJ, or Kem Bond® HS Metal Primer, B50NZ3, red oxide, as manufactured by Sherwin Williams Company, Woodside, NY, or approved equal. Primer shall be a fast drying, 53 to 61% weight solids, low VOC, rust inhibiting, modified alkyd metal primer with a dry film thickness of 1.7 - 5 mils. Paint requires up to two (2) to two and a half (2 ½) hours drying time before recoating (with alkyds).

Second Coat and Third Coats (Field Applied): D.T.M.(Direct to Metal) Alkyd semi-gloss P24, Safety Black, as manufactured by Benjamin Moore & Co., Montvale, NJ, or Steel Master 9500 Silicone Alkyd, as manufactured by Sherwin Williams Company, Woodside, NY, or approved equal. Color to be Black unless otherwise shown on the contract drawings. Topcoat shall be a silicon alkyd, semi or high gloss coating having a dry film thickness of 1.7 - 3 mils. Paint requires up to thirty (30) hours drying time @ 50º F; up to sixteen (16) to eighteen (18) hours drying time @ 77º F. Paint adhesion shall be 100% retention in accordance with ASTM D3359, classification 5B.

All paints shall be applied when ambient air temperature is 50 °F minimum and rising. No painting will be allowed below the minimum ambient air temperature. Surfaces to be painted shall be moisture free. In addition, no painting will be allowed below the temperature at which moisture will condense on surfaces; the ambient temperature must be at least 5 degrees F above the dew point.

INSTALLATION: The fences shall be erected in holes that have been formed in the concrete or stone to receive them. After the posts have been set in place and properly supported to hold them in line and grade, the annular space shall be filled with the specified non-shrink, cementitious grout. The grout shall be flush with the concrete curb. After the grout has cured, the Contractor is to install polyurethane sealant around the fence post. Sealant shall be gunned in between the base of the fence post and the concrete curb. Sealant shall be applied in strict accordance with

the manufacturer's instructions, and shall be tooled in as required. **Note: All gypsum (Calcium Sulfate, CaSO4) based grout will be rejected.**

Any fences and gates not set plumb and true to line and grade shall be removed and replaced at the Contractor's expense. The Contractor shall maintain the fences and gates during the life of the contract and shall repair replace all members that are disturbed, damaged, or destroyed.

SUBMITTALS: All submittals shall be in accordance with the requirements of the S-Pages.

Shop Drawings: shall be submitted prior to fabrication. Include plans, elevations, for entire length including all radial panels, sections, details, attachments to existing and stepped conditions, connectors, anchoring and connecting hardware, fence height, post spacing, gate locking device, gate construction, dimensions and unit weights of framework, and lightning protection for all fences. Include schedule for fence uprights and fabrications methods. Indicate all field and shop welds. Detail custom conditions at non-90° angles.

SAMPLES: The Contractor shall submit for the approval finished samples of parts of the fences. The workmanship and finish of the final product shall be equal to the approved samples. Only if proposed manufacturer is other than as specified, a full size sample must be submitted for approval for the following: Gate latch for single gate, padlock, cast iron parks leaf.

FOUNDRY CERTIFICATE: A certificate verifying the quality of ductile iron for the Parks Leaf shall be submitted. Certificate shall be on Manufacturers' letterhead, dated and signed by the company President with Contract Number, Contract Title, Contractor Name, and Class of Ductile Iron provided.

PAINT SUBSTITUTION: A written request for paint substitution must be submitted to the Engineer. The Contractor shall submit this request, along with manufacturer's data sheets for approval, a minimum of two (2) weeks prior to the intended date of paint application. All paint substitutions must be approved in writing prior to use.

MEASUREMENT AND PAYMENT: The quantity **of STEEL FENCE** to be paid for shall be the number of **LINEAR FEET** of each type of fence furnished and erected complete, regardless of height and material, in accordance with the plans, specifications, and directions of the Engineer.

The quantity of **GATES** to be paid for shall be the number of **EACH** size (including both leaves of double gates and gate posts) furnished and erected complete in accordance with the plans, specifications, and directions of the Engineer, including Park leaf castings where double gates are specified, locking devices, gate stops, and padlocks.

The prices bid shall be unit prices per **LINEAR FOOT** of Steel Fence of each type and a unit price for EACH gate and shall include the cost of all labor, materials, and equipment required to furnish and erect fences and gates, including painting, grout, sealant, and all incidental expenses necessary to complete the work in accordance with the plans and specifications, to the satisfaction of the Engineer.

Concrete and excavation shall be paid for separately under their respective Items.

Item No.	Item	Pay Unit
PK-ESCR 170	**STEEL FENCE 4'-0" HIGH**	**L.F.**
PK-ESCR 170 B	**STEEL FENCE 2'-6" HIGH**	**L.F.**
PK-ESCR 171	**SINGLE GATE FOR STEEL FENCE 4'-0" HIGH**	**EA**
PK-ESCR 173	**DOUBLE GATE FOR STEEL FENCE 4'-0" HIGH**	**EA**
6.34 AMF	**HIGHWAY STEEL FENCE**	**L.F.**

END OF SECTION

SECTION PK-ESCR 178 – BASEBALL ACCESSORIES SET

WORK: Under this Item, the Contractor shall furnish **BASEBALL ACCESSORIES SETS** in accordance with the plans, specifications, and directions of the Engineer. Each set of baseball accessories shall consist of three (3) Bases, one (1) Home Plate and one (1) Pitcher's Box Plate, all provided with accompanying spikes.

Bases shall be 15" x 15" x 3" white vinyl-coated nylon shell with nylon straps over firm foam filler with two (2) heavy steel spikes, as manufactured by "Beam Clay Bolco Bases" Great Meadows, NJ, Model No. 120-PRO, or approved equal. Home plate shall be a regulation size white rubber with black beveled edge equipped with five (5) four (4") inch zinc-plated metal spikes as manufactured by "Beam Clay Bolco Bases" Great Meadows, NJ, Model No. 380-HP, or approved equal. Pitcher's plate shall be 6" x 24" x 3/4" white rubber equipped with three (3) metal spikes as manufactured by "Beam Clay Bolco Bases" Great Meadows, NJ, Model No. 490-cc, or approved equal.

MEASUREMENT AND PAYMENT: The quantity of **BASEBALL ACCESSORIES SETS** to be paid for under this Item shall be the number of sets furnished in accordance with the plans, specifications, and directions of the Engineer

The price bid shall be a unit price for each **SET** of Baseball Accessories Set and shall include the cost of all labor, materials, equipment, and incidentals expenses necessary to complete the work in accordance with the plans and specifications, to the satisfaction of the Engineer.

Item No.	Item	Pay Unit
PK-ESCR 178	BASEBALL ACCESSORIES SET	SET

END OF SECTION

SECTION PK-ESCR 180 – BASKETBALL BACKSTOP-SINGLE POST

WORK: Under this Item, the Contractor shall furnish and erect a complete cantilevered **BASKETBALL BACKSTOP - SINGLE POST** with clear polycarbonate (PC) BACKBOARD, in accordance with the plans, DPR standard details, specifications, and directions of the Engineer. The backstop shall be freestanding only.

MATERIALS: Unless otherwise herein specified, all materials and methods of construction shall conform to the requirements of the NYCDOT Standard Highway Specifications.

Post: Post shall be galvanized steel, powdercoated per this specification. All fittings for the backboard shall be as indicated on the standard details and shall be powdercoated. Post and fittings shall be as manufactured by All City Play Equipment, Metuchen, NJ, or approved equal.

The cantilevered basketball backstop shall be attached to one six inch (6") square, three-sixteenth inch (3/16") thick powder coated square galvanized steel tube.

Posts shall be reinforced with two (2) three-eighths (3/8") inch reinforcing bars and filled with concrete for park structures as indicated on the plans and standard details.

Post Cap: The post caps shall be cast of class 65-45-12 ductile iron, powdercoated and secured as shown on the plans.

Fastenings: All fastenings shall be as indicated on the plans and the Contractor shall furnish and install all required bolts, drive and machine screws, pins, rivets, welds, and other fastenings necessary to complete the work, whether specifically indicated on the plans or not. Bolts and nuts shall be galvanized after threading. The drive screws shall be of stainless steel. All fastenings shall be neatly sprayed with powder coat touch-up spray after installation. All fastenings shall be coated with high locking adhesive immediately prior to tightening. The locking adhesive shall be Loctite® 271 manufactured by Henkel Corporation, Westlake, OH, or approved equal.

Backboard - Polycarbonate: Polycarbonate backboard shall be as manufactured TrueBounce Backboards, New Bedford, MA, model number XL7048, or approved equal. Dimension of backboard shall be as shown on the standard details or contract drawings. Backboard shall be made of half (1/2") inch unbreakable clear polycarbonate material, secured to frame with stainless steel bolts, sizes as shown in the plans. The frame for the backboard shall be made of aluminum, lap jointed at corners and bolted together, all as recommended by the manufacturer.

Goal: Goal shall be "Endurance Fixed Goal", Model No. 8550 as manufactured by Gared Sports, St. Louis, MO or "Heavy Duty Playground Goal" No. 00251-H00 as manufactured by Porter, Broadview, IL, or approved equal. Any equal submitted must match complete backplate hole layout as shown on standard details. Goal shall be unconditionally warranted for a minimum of 10 years. The goal shall be made of steel rod welded to steel brackets bolted to backboard, all as shown on the plans. All metal parts shall be hot-dipped galvanized and powder coated as heretofore specified, after fabrication. Powdercoating shall be color orange. Net is not required.

Concrete Footing: Shall be 3,200 psi Class B-32 concrete per the NYCDOT Standard Highway Specifications Section ESCR-4.06.

Steel Bar Reinforcement: Reinforcement shall meet the requirements of the NYCDOT Standard Highway Specifications, the N.Y.C. Building Code and the latest ASTM specification for Deformed and Plain Billet-Steel Bars for Concrete Reinforcement", Designation A-615. Reinforcement shall be of the sizes and dimensions shown on the plans.

ERECTION: Posts shall be set in holes formed in new reinforced concrete footings; dimensions indicated on the Standard Detail. Posts shall then be set in holes and shall be grouted firmly in

place with a grout composed of one part Portland Cement and two parts sand, or approved equal. Posts shall be erected truly vertical.

POWDERCOATING: All new backstop parts (except for steel or polycarbonate backboards) shall be powdercoated with TGIC-Polyester; nuts, bolts and threaded ends of tie rods shall be neatly sprayed with powdercoat touch-up after installation. No lacquer, urethane, or other coatings which would prevent proper adhesion of powder coating shall be applied to the parts. The powdercoating shall be applied in such a manner that the coating will not peel off. Ensure surfaces to be coated are clean, dry, and free of grease, dust, rust, etc. All coated parts shall first receive phosphating and chromatizing treatments to improve the adhesion of the surface coating. Color to be black unless otherwise indicated on the plans.

The TGIC-Polyester shall be applied at a film thickness of 3 to 4 mils by electrostatic spray process and bake finished per manufacturer's directions. The TGIC-Polyester shall be applied without voids, tears or cuts that reveal the substrate and shall thoroughly adhere to the metal without peeling when scratched with a pick device or knife blade point.

Laboratory Test For TGIC-Polyester Powdercoat: At the discretion of the Engineer, a sample TGIC-Polyester powdercoated part shall be laboratory tested for bonding of the powdercoating to the metal. The test shall be the Cross Hatch test, as per ASTM D3359, Method B. Failure to satisfactorily pass this test shall be a basis for rejection.

TOUCH-UP & REPAIR: For minor damaged caused by installation or transportation, clean damaged area, then:

1. On damaged galvanized surfaces, apply organic zinc repair paint complying with ASTM A780, then repair powder coating per number 2 below. Galvanizing repair paint shall have 65 percent zinc by weight. Thickness of repair paint shall be not less than that required by ASTM A123.
2. On damaged powder coated surfaces, touch-up finish in conformance with manufacturer's recommendations. Provide touch-up such that repair is not visible from a distance of 6 (six) feet.

SUBMITTALS: All submittals shall be in accordance with the requirements of the S-Pages.

Shop Drawings: The Contractor shall submit Shop Drawings showing complete details of construction and installation.

Warranty for Goal: A ten (10) year warranty shall be submitted, and in turn handed over to the Engineer.

MEASUREMENT AND PAYMENT: For furnishing and installing **BASKETBALL BACKSTOP - SINGLE POST (PC BACKBOARD)** in accordance with the plans, specifications, and directions of the Engineer, the Contractor shall receive the unit price bid.

The price bid shall be a unit price for **EACH** Basketball Backstop–Single Post (PC Backboard) furnished and installed, and shall include the cost of all labor, materials, and equipment, including posts, concrete for park structures for footings, posts filled with concrete, steel reinforcement, unclassified excavation, sawcutting, core drilling (where required), outrigger, tie rods, polycarbonate backboard, goal, powder coating, locking adhesive and any other incidental expenses necessary to complete the work in accordance with the plans and specifications, to the satisfaction of the Engineer.

Hand and/or Pneumatic Excavation, if required, shall be paid for separately under its own contract item.

Item No.	Item	Pay Unit
PK-ESCR 180	BASKETBALL BACKSTOP-SINGLE POST (PC BACKBOARD)	EA

END OF SECTION

SECTION PK-ESCR 181 – HOODED BASEBALL BACKSTOP

WORK: Under this item, the Contractor shall furnish and erect galvanized and powdercoated **HOODED BASEBALL BACKSTOP ON CURB** or **ON PIERS** (see plans), with vinyl-clad steel fabric, in accordance with the plans, specifications, and directions of the Engineer.

MATERIALS: Unless otherwise herein specified, all materials and methods of construction shall conform to the requirements of the NYCDOT Standard Highway Specifications.

All posts, rails, sleeves, and bracing shall be galvanized and powdercoated steel pipe of the sizes shown on the plans in accordance with ASTM Specifications A-120, except the pipe shall be unthreaded and untested for water pressure, except as otherwise herein specified or shown on the plans. Fittings shall be of the best quality malleable iron castings or pressed steel and provided with pin connections, and shall be galvanized in accordance with appropriate ASTM A-123 and powdercoated per this specification. Malleable iron fittings shall be galvanized in accordance with ASTM A-338 and powder coated per this specification.

Surface Coatings: All posts, rails, and fittings shall be powdercoated with either polyvinyl chloride (PVC) or TGIC-Polyester, with the exception of nuts and bolts which shall be sprayed with powder coat touch-up after installation.

Galvanizing of all components shall provide an acceptable substrate for applied powdercoatings. No lacquer, urethane, or other coatings which would prevent proper adhesion of powdercoating shall be applied to the pipe. The powdercoating shall be applied to the galvanized surfaces in such a manner that the coating will not peel off. Ensure surfaces to be coated are clean and dry and free of grease, dust, rust, etc. All coated parts shall first receive phosphating and chromatizing treatments to improve the adhesion of the surface coating. Color to be black unless otherwise indicated on the plans.

The entire installation shall be coated with one of the two following types of powdercoating, with the exception of fabric which shall always be PVC coated. All Fence components shall be coated on all surfaces, in a color to match the framework. All coated surfaces shall comply with the adhesion specifications listed in ASTM F1043.

TYPE A - Polyvinyl Chloride Powder Coating: PVC powdercoating shall be applied to the galvanized steel or iron by the fluid bed method to a preheated base which has been cleaned and primed prior to submersion in vinyl, resulting in a firm bond between the PVC and the metal. PVC shall be applied to a film thickness of 10 to 15 mils on framework, and fittings and 7 to 12 mils on fabric without voids, tears or cuts that reveal the substrate and shall thoroughly adhere to the metal without peeling when scratched with a pick device or knife blade point.

TYPE B - TGIC-Polyester Powdercoating: TGIC-Polyester Powder shall be applied to the galvanized steel or iron in such a manner that the coating will not peel off. The TGIC-Polyester shall be applied at a film thickness of 3 to 6 mils by electrostatic spray process and bake finished per manufacturer's directions. The TGIC-Polyester shall be applied without voids, tears or cuts that reveal the substrate and shall thoroughly adhere to the metal without peeling when scratched with a pick device or knife blade point.

TESTS:

Field Test For PVC Powdercoating: As per ASTM F668, three (3) sample sections of the PVC powder- coated framework shall be tested for bonding of the powder coat to the metal. Each test will consist of making two(2) cuts parallel to the axis of the pipe or fitting, through the coating, approx. One-sixteenth inch (1/16" or 1.6 mm) apart, at least one-half inch (1/2" or 12.7 mm) long. With a knife peel back a section of the coating between one-eighth inch (1/8" or 3.2 mm) and

onequarter inch (1/4" or 6.4 mm) long to produce a tab. Attempt to remove the one-sixteenth inch(1/16") strip of coating by pulling the tab. The fence shall be deemed acceptable if the coating breaks rather than separates from the metal on all three(3) samples.

Laboratory Test For TGIC-Polyester Powdercoat: At the discretion of the Engineer, a sample of the TGIC-Polyester powdercoated fence shall be laboratory tested for bonding of the powdercoating to the metal. Test shall be the Cross Hatch test per ASTM D3359, method B. Failure to satisfactorily pass this test shall be a basis for rejection.

Touch-up and Repair: For minor damaged caused by installation or transportation and field welded metal powder coated surfaces, clean welds, bolted connections, and abraded areas, then;

1. On damaged galvanized surfaces, apply organic zinc repair paint complying with ASTM A780, then repair powder coating per number 2 below. Galvanizing repair paint shall have 65 percent zinc by weight. Thickness of repair paint shall be not less than that required by ASTM A123.
2. On damaged powder coated surfaces, touch-up finish in conformance with manufacturer's recommendations. Provide touch-up paint such that repair is not visible from a distance of (6') six feet.

FABRIC: Fabric shall be hot dip galvanized steel wire mesh as per ASTM - 641, with a thermally fused polyvinyl chloride powder coating of 7 to 12 mils thick as per ASTM F668 class 2b. Color to match framework. Fabric shall be produced by methods recognized as good commercial practices. Core wire tensile strength shall be 78,000 psi.

Wire used for the manufacture of fabric shall meet the requirements of ASTM F668 and shall be capable of being woven into fabric without the PVC coating cracking or peeling. PVC coating shall be a dense impervious covering free of voids. Excessive roughness, bubbles, blisters, bruises and flaking will be a basis for rejection. PVC shall be thermally fused. Bonded or extruded and glued surface coating will not be permitted. Fabric shall be stretched to provide a smooth, taut, uniform appearance free from sag.

Field Test: PVC coating on fabric shall be field tested for adherence to the metal as outlined elsewhere in this specification. Tensile strength shall have a test minimum of 3300 psi in accordance with ASTM D-412.

Mesh Sizes: Fabric shall be woven diamond mesh openings determined by taking the mean of two dimensions at right angles to each other. Size shall be 2 inches.

Fabric Thickness: Wire for side and ends shall have an uncoated wire dimension of .192 inches in diameter. Zinc coating shall be .40 ounces per square foot of wire surfaces. Vinyl coating shall be not less than .022 inches. Total diameter of wire to be not less than .236 inches.

Wire for top shall be .148 in. in diameter. Zinc coating shall be .40 ounces per square foot of wire surfaces. Vinyl coating shall not be less than .022 inches. Total diameter of wire to be not less than .192 inches.

Tension Bands: Tension bands shall be 1/8" x 1" pressed steel.

Tension Bars: Tension bars shall be 1/4" x 3/4" galvanized steel.

TIES: Tie-wire core thickness shall be 9 gauge (.148") wrought aluminum alloy 1100-H16 wire with an extruded vinyl coating in accordance with ASTM A641 Class 3. PVC shall be applied to a film thickness of 20 to 22 mils. Ties shall be spaced fifteen (15) inches apart on rails and twelve (12) inches apart on posts. The ends of ties shall be wound in a telegraph twist two and one half turns. Color to match mesh. Contractor shall touch-up PVC coating on ties damaged as result of installation.

Fittings: Single steel clamps shall be one-quarter inch(1/4") by one-half inch(1/2") galvanized steel with one-half inch(1/2") pins. Double steel clamps shall be one-quarter inch(1/4") by onehalf inch(1-1/2") galvanized steel with one-half inch(1/2") pins.

Elbows: Welded galvanized pipe elbows consist of standard weight three inch(3") .D. galvanized steel pipe, with ends cut and welded in such a manner as to properly receive the two and one-half inch(2 1/2") pipe hood framework rails, as indicated on the plans. For the two side elbows, a plug consisting of two inch(2") O.D. galvanized pipe and approximately seven inches(7") in length, is slipped into the elbow and has a flat steel cap welded to its end. A three-eighth inch(3/8") thick lug with drilled hole is then welded to the cap, allowing a malleable iron pipe end to be attached to the elbow. The elbows and plugs are attached to the pipe rails by means of pin connections. For the center elbow, the plug-cap-lug welded piece is to be omitted. All welds shall be ground smooth, and shall be galvanized after fabrication.

Malleable Iron Pipe Ends: Malleable iron pipe end shall be three-eighth inch(3/8") thick malleable iron.

Post Caps: Shall be malleable iron with 3/16" wall thickness throughout. Cap shall fit tightly over post and shall be fixed in place with two #14 stainless steel drive or set screws.

FASTENINGS: All fastenings shall be as indicated on the plans and the Contractor shall furnish and install all required bolts, drive and machine screws, pins, rivets and other fastenings necessary to complete the work, whether specifically indicated on the plans, or not. All pins shall be one-half inch (1/2") diameter with counter-sunk heads and upset ends. All hex heads bolts are to be onehalf inch (1/2") diameter, carriage bolts are to be three-eighth inch (3/8") diameter. All bolts are to be supplied with appropriate lock washers and nuts. Bolts, nuts, and pins shall be hot-dipped galvanized steel; drive and set screws shall be stainless steel 18-8.

BOLT AND HARDWARE INSTALLATION: Nuts and bolts shall be galvanized but not powder coated. Cans of TGIC-Polyester or PVC touch-up powder coating shall be used to paint the nuts and bolts per manufacturer's recommendations. The ends of all bolts shall be peened after tightening. Bolts which are installed six feet (6') or less above grade shall not protrude more than one-quarter inch (1/4") beyond the nut after tightening. All rough edges resulting from the cutting of bolts to achieve this requirement shall be filed smooth to the satisfaction of the Engineer.

BACKSTOP: The backstop shall consist of a frame constructed of standard weight galvanized and powder coated pipe and rails, except for the four inch (4") O.D. posts, which shall be double extra strong.

The side and back of the baseball backstop consists of a framework of vertical galvanized and powder coated steel posts set in a concrete pier, and horizontal galvanized and powder coated steel pipe rails, of varying sizes and outer diameters as specified in the Standard Detail Sheets. The rails are connected to the posts with either single steel clamps or double steel clamps, and malleable iron pipe ends with appropriate fastenings. Chain link fabric, consisting of two inch (2") vinylclad galvanized steel wire mesh, tension bars, tension bands, tie wires, and attendant fastenings, is stretched tightly over each frame section and attached to the frame.

The backstop hood consists of a series of galvanized and powder coated steel pipe rails, of varying lengths and O.D.'s as specified in the Standard Detail Sheets, and placed either vertically, horizontally, or on angles. The rails form the main food frame, hood modification, and hood bracing, as shown in the Standard Detail Sheets, and are fastened together with either single steel clamps or double steel clamps, together with malleable iron pipe ends, or welded pipe elbows. The fastenings connect fittings and steel clamps to the rails and to each other. Once the hood framework, modification and bracing is constructed, two inch(2") chain link fabric, consisting of vinyl-coated galvanized steel wire, is cut to fit each hood section and fastened to the frame by

means of tension bands, tension bars, tie wires, and attendant fastenings.

Concrete: Concrete for piers or curbs shall be placed as shown. Concrete shall conform to N.Y.C. Dept. Of Transportation class B-32, Type II A, air entrained, moderate sulphate resistant. The batch shall contain a minimum of six (6) bags of cement per cubic yard of concrete, maximum of 6¼ gallons of water per bag, a maximum of three (3") inch slump, and a minimum compressive strength of 3,200 psi. Large aggregate shall be limited to one (1") inch.

METHOD: All methods of construction shall conform to applicable portions of the NYCDOT Standard Highway Specifications.

Installation on Piers: The piers shall be constructed of concrete as described in Section ESCR-4.06 as shown on the Standard Detail Sheets. The piers shall have holes formed in it, each being two inches (2") larger in diameter than the pipe post which shall be set in them. Steel bar reinforcement shall be set in the concrete in accordance with the Standard Detail Sheets and the plans.

Installation on Curb: The curb shall be constructed of Concrete for park structures as described in Section ESCR-4.06 and steel bar reinforcement as described in Section ESCR-4.14 and as shown on the Standard Detail Sheets. The curb shall have holes formed in it, each being two inches (2") larger in diameter than the pipe post which shall be set in them.

Installation of Posts: The backstop frame posts shall be set in holes, which shall have been formed in the concrete piers to receive them and shall be firmly grouted in place using a mortar or grout composed of one (1) part Portland cement and two(2) parts sand or approved equal. The posts shall be erected vertical.

SUBMITTALS: All submittals shall be submitted prior to manufacture and in accordance with the requirements of the S-Pages.

Shop Drawings: Before the work in the shop is started, the Contractor shall submit Shop Drawings for approval, including complete details of installation and construction.

Samples: The Contractor shall submit the following for approval:

Fence Framework: One piece of each pipe size, twelve inches (12") long.

Fence Fabric: One piece twelve inches (12") square.

Design Mix report: The Contractor shall submit a design mix report prior to the production and delivery of concrete for review and approval. Design Mix Report dated more than one (1) year of the submittal date will be rejected. The Contractor shall submit the design mix report including but not limited to the following information: date of design mix report, name and address of concrete mixing company, name and address of laboratory, name of project, water/cement (w/c) ratio, type and sieve analysis of aggregates, type of cement, type and amount of fly ash or slag used, percentage of portland cement replacement by fly ash or slag, types of admixture used, amount of water used, air content and slump of design mix, three (3) day curing strength, seven (7) day curing strength, and twenty-eight (28) day curing strength.

MEASUREMENT AND PAYMENT: For each **HOODED BASEBALL BACKSTOP ON CURB OR ON PIERS** with vinyl-clad steel fabric furnished and installed in accordance with the plans and specifications and directions of the Engineer, the Contractor shall receive the unit price bid.

The price bid shall be a unit price for **EACH** Hooded Baseball Backstop with vinyl-clad steel fabric furnished and installed, and shall include the furnishing of all labor, materials, equipment, including unclassified excavation, concrete for curb/piers (as shown on details) per Section PK-ESCR-4.06, steel bar reinforcement, galvanizing, powder coating, and any other incidental

expenses necessary to complete the work in accordance with the plans and specifications, to the satisfaction of the Engineer.

Item No.	Item	Pay Unit
PK-ESCR 181	**HOODED BASEBALL BACKSTOP**	**EA**

END OF SECTION

SECTION PK-ESCR 182 – PREPARE SKINNED AREA

WORK: Under this Item, the Contractor shall PREPARE SKINNED AREAS and surfaces on the baseball diamonds, in accordance with the plans, specifications, and directions of the Engineer.

MATERIALS: Unless otherwise specified herein, all materials shall conform to the requirements of Section "B", Materials and Methods of Construction.

Skinned Infield Mix: Infield Mix shall be taken from an approved source(s) and shall contain a combined total of not more than five percent (5%) of mica, feldspar, and organic matter. The percentage of organic matter shall be determined by loss through ignition of moisture free samples dried at one hundred (100) degrees centigrade. No gravel or hard pan will be allowed in the clay mixture. The soil shall be free from gravel and hardpan, as well as sticks, roots, sod, and trash of every description. No material shall be delivered in a pasty, muddy, or lumpy condition. Material shall not be dark or odorous. The particle size analysis of the mixture shall be as follows:

1. U.S. Std. Sieve No. % Passing No. 10 90%-100%
2. U.S. Std. Sieve % Passing l/4" 100%
3. The portion of the mixture passing the No.10 U.S. Standard Sieve when tested in accordance with the American Society of Agronomy's Methods of Soil Analysis, Part 1, Chapter 43, Sec. 43-5, "Particle Fractionation and Particle Size Analysis", shall be according to the American Society of Agronomy Particle size and in accordance with ASTM D422 “Standard Test Method for Particle-Size Analysis of Soils”, and as follows:

   CLAY/SILT 23+4% (Minimum Clay Content shall be 12%)

   SAND: 77+4%

   TOTAL: 100.0%

   Clay is defined as particles < 0.002 mm in diameter, silt are particles >0.002mm and < 0.05mm, and sand are particles >0.05mm and < 2.00mm. Any clay mixture that has less than 12% of clay content shall be rejected.

For information only, this custom clay, silt, and sand mix is available at Recreational Sand, LLC, Williamstown, NJ, Greenpro materials, Bound Brook, NJ, Custom Clay and Soil Co., Syosset, NY, or approved equal. If the sand, silt, and clay do not comply with the above ranges, the Skinned Infield Mixture will not be accepted.

Plasticity Index: Plasticity index and limits shall be in accordance with ASTM D4318 “Standard Test Methods for Liquid Limit, Plastic Limit, and Plasticity Index of Soils.” The plasticity index of the material shall be less than five (5) and the plastic limit and the liquid limit shall be determinable.

Color: The color of the soil must be between one of the following ranges in accordance to the Munsell Soil Color Chart: (A) 10 YR 5/6 (yellowish brown) or 10 YR 5/8 (yellowish brown) or 10YR 6/6 (yellowish brown) or 10YR 6/8 (yellowish brown) 7.5YR 5/8 (strong brown) or 7.5YR 6/6 (strong brown) (B) 7.5YR 6/8 (reddish yellow) or 7.5YR 5/6 (strong brown) or (C) 5YR 5/6 (yellowish red) or 5YR 5/8 (yellowish red)

Methods of Test: The mixture shall be tested in accordance with the American Society of Agronomy's Methods of Soil Analysis, Part 1, Chapter 43, Sec. 43-5, and ASTM Designation D42l and D4318, latest revisions. However, any applicable method of test or examination may be used, provided that it is satisfactory to the laboratory designated by the Department of Parks & Recreation.

The Engineer reserves the right to reject any or all samples submitted for approval which in their opinion is unsatisfactory in this respect. The clay shall be well dried before application to finished surface, and broken up fine with a steel rake.

Sand: The sand shall be clean and sharp and free from lumps and foreign matter. Sand shall conform to grading requirements as follows:

Sieve Size	Percentage
¼" sq. screen	100%
No. 100 sq. screen	not more than 15%

LAYING: The Skinned Infield Mix shall be prepared and constructed in accordance with the latest revision of ASTM Designation F2107. The clay/sand mixture shall be spread over the surface in one layer approximately six inches (6") thick, thoroughly raked to break up the clay and to mix in the sand so as to make a homogeneous mixture of sand and clay and each layer handrolled to a thickness of approximately four inches (4"). The roller shall not exceed two (200) hundred pounds.

SUBMITTAL: All submittals shall be in accordance with the requirements of the S-Pages.

Samples: The Contractor shall submit a two pound (2 lb.) sample of the clay/sand mixture taken from the source of supply they propose to use, together with a report from an independent soil testing laboratory giving a physical analysis of the proportions of sand, clay and silt contained therein. Sample shall be labeled with Contract Number and Name, Contract Item No., and name of supplier. All clay/sand mixture used in the work shall conform to the approved sample.

MEASUREMENT AND PAYMENT: The quantity of **PREPARE SKINNED AREA** to be paid for under this item shall be the number of **SQUARE YARDS** furnished and prepared, in accordance with the plans, specifications, and directions of the Engineer.

The price bid shall be a unit price per **SQUARE YARD** and shall include the cost of all labor, materials, equipment and all other incidentals necessary to complete the work, including clay, sand, and laboratory testing, all in accordance with the plans and specifications, to the satisfaction of the Engineer.

Excavation, if necessary, shall be paid for under its own item.

Item No.	Item	Pay Unit
PK-ESCR 182	**PREPARE SKINNED AREA**	**S.Y.**

END OF SECTION

SECTION PK-ESCR 183 – SOCCER GOAL, PORTABLE

WORK: Under this Item, the Contractor shall furnish and install **SOCCER GOALS- PORTABLE AND SOCCER GOALS JUNIOR - PORTABLE** set in accordance with the plans and specifications and directions of the Engineer. Each set shall consist of two (2) goals as shown on the plans.

MATERIALS: Unless otherwise herein specified, all materials and methods of construction shall conform to the requirements of the NYCDOT Standard Highway Specifications.

Portable Soccer Goals: SOCCER GOALS-PORTABLE shall be regulation size (8'h X 24'w X 8'd). SOCCER GOALS JUNIOR-PORTABLE shall be 6'h X 12'w X 6'd or similar. Goal shall meet ASTM F295014 "Standard Safety and Performance Specification for Soccer Goals" and ASTM F1938-98 "Standard Guide for Safer Use of Movable Soccer Goals". Goal posts and the crossbar shall be 4 inch by 2 inch 11 gauge tubular steel with (2) 28 lb. anchor weights permanently installed, and a special cable for net attachment. Goal shall be similar to model M88W-824, equipped with permanent solid rubber wheels and ACW-28 optional anchor weights as manufactured by Keeper Goals, Wauwatosa, WI or approved equal. Anchor weights shall be factory installed so they will not come off. Soccer goals shall be polyester powder coated, finish color shall be WHITE. Soccer net is not required.

Safety Warning Labels: The crossbar and both vertical posts of each portable soccer goal shall be provided with safety warning labels in accordance with ASTM F2950-14 "Standard Safety and Performance Specification for Soccer Goals", similar to those provided by Keeper Goals, or approved equal. The labels shall be placed by the manufacturer so they are clearly visible to the public. Label, type 1. *"WARNING----NEVER CLIMB ON GOAL, Goal can fall over causing serious injury or death", Label, type 2. "WARNING-ALWAYS ANCHOR GOAL, Unsecured goal can fall over causing serious injury or death" and Label, type 3. "WARNING- This goal should be securely anchored at all times- This goal is not to be stored or used on a slope or hill area- Check that all fastenings are fully tightened before using this product- Check fastenings periodically after using goal- Goal shall be secured against overturning at all times- Do not climb on net or framework- This goal is designed to be used for soccer only".* The following labels are required:

1. Two (2) of type 1 on each goal post (four in total)
2. Two (2) of type 2 on each goal post (four in total)
3. One (1) of type 3 on each crossbar (two in total)

Goal Markings: Specification labels, as provided by the Manufacturer and as described in ASTM F2950-14 "Standard Safety and Performance Specification for Soccer Goals", shall be placed on one or both vertical posts. Label, type 4 shall contain the name of the manufacturer, and at least one of the following: address, phone number, and/or website. Label, type 5 shall include "Meets Safety and Performance Specification ASTM F2950-14 when assembled according to manufacturer's instructions". The following labels are required:

1. One (1) of type 4 on each goal (two in total)
2. One (1) of type 5 on each goal (two in total)

INSTALLATION: Contractor shall be responsible for setting up the goals for inspection by the Engineer to demonstrate completeness and acceptability of the system. Goal shall be placed either in final position, or against the fence, as directed by the Engineer. Contractor shall install goals in accordance with the 2014 NY Senate-Assembly Bill S6811, A5308C, effective May 25,

2015, and “Guidelines for Movable soccer goal safety” issued January 1995 by U.S. Consumer Product Safety Commission. It is imperative that ALL movable soccer goals be anchored firmly in place. Manufacturer provided anchors shall NOT be removed under any circumstances.

SUBMITTALS: The Contractor shall submit shop drawings (when proposing a substituted item) or catalog cuts (when proposing a specified item) showing all components and assembly details. Also submit maintenance data and manufacturer’s warranty in accordance with the requirements of S-Pages.

SUBSTITUTIONS: A written request for substitution of manufactured products must be submitted as per S-Pages. The Contractor shall submit this request, along with a detailed shop drawing for approval, a minimum of two weeks prior to the intended date of construction. All substitutes must be approved in writing prior to ordering.

MEASUREMENT AND PAYMENT: The quantity of **SOCCER GOALS- PORTABLE** to be paid for under this Item shall be a unit price for each **SET** of two (2) Goals furnished and erected in accordance with the plans, specifications, and directions of the Engineer.

The price bid shall be a unit price for each SET of two (2) Goals and shall include the cost of furnishing all labor, materials, and equipment and all incidental expenses necessary to furnish and erect the goals including submittals, delivery, set-up, anchor weights, safety warning labels, and goal markings, all in accordance with the plans and specifications, to the satisfaction of the Engineer.

Item No.	Item	Pay Unit
PK-ESCR 183 A	SOCCER GOALS, PORTABLE	SET
PK-ESCR 183 B	SOCCER GOALS JUNIOR SIZE, PORTABLE	SET

END OF SECTION

SECTION PK-ESCR 184 – TENNIS COURT ACCESSORIES SET

WORK: Under this Item, the Contractor shall furnish and install **TENNIS COURT ACCESSORIES SET**, in accordance with the plans, specifications, and directions of the Engineer.

MATERIALS: Unless otherwise specified herein, all materials and methods of construction shall conform to applicable portions of the NYCDOT Standard Highway Specifications, and DPR Standard Detail Sheet 'Tennis Court Layout & Details'.

Post: Each set of Tennis Court Accessories shall consist of one (1) net with center strap anchor supported by two (2) posts. Posts shall be extra heavy weight Schedule 80 hot-dipped galvanized steel pipe of the sizes shown on the plans.

Fittings: The reducing collars, deck plates, covers at top, and tapered rings or sockets at bottom of setting sleeves shall be made of the best quality ductile cast iron, galvanized after threading and other necessary machining, secured as shown on the plans. All cleats and clamps for cables shall be made of best quality malleable cast iron, galvanized and secured with stainless steel machine screws.

Pulley Top: The pulley tops shall be of the best quality galvanized malleable cast iron, with pulley axles and fastening pins of stainless steel. Castings shall be perfectly sound and smooth and free from all flaws.

Net Tightener (Winch): The net tightener shall be powdercoated steel, as manufactured by Shelby, Model No, 5403, nine hundred pound (900 lb.) capacity, or approved equal.

Nets: Net size shall be forty-two feet (42') by three and one-quarter feet (3 1/4'). Mesh opening of nets shall not exceed one and three-quarter inch (1 3/4"). Mesh shall be fabricated of three strand twisted nylon cord with the top nine (9) rows double mesh. The headband, side and bottom bindings shall be extra heavy nylon reinforced vinyl or polyester fabric. The top hood shall be white, minimum two and one-half inches (2 1/2") wide and attached to the net with four (4) rows of heavy, polyester lock stitching. The side and bottom bindings shall be a minimum of one inch (1") wide and have a double row of heavy polyester lock stitching. The top cable supporting the net shall be a five (5) mm vinyl-coated galvanized or stainless steel cable.

The center strap shall be a two-inch (2") wide adjustable nylon strap with rustproof snap hook. The net shall be similar to Model #20103 Hercules Tennis Net as manufactured by Carron Net Co., Inc., Two Rivers, Wisconsin, or approved equal.

Anchor Box: The center strap anchor box shall conform to the standard details, as shown on the plans, and shall consist of a 1 5/8" by 10" galvanized pipe with ¼" pin set in concrete. The anchor box shall be similar to Catalogue VB24, as manufactured by Bison Recreational Products, Lincoln, NE, or approved equal.

ERECTION: Posts shall be set in standard weight galvanized steel pipe sleeves of the sizes shown on the plans. Each sleeve shall be equipped with a deck plate of the size shown, for which an approved operating key shall be furnished by the Contractor. Posts shall be erected truly vertical.

Footings: Sleeves shall be set in concrete footings of the size and construction shown on the plans. The footings shall be erected on a crushed stone bed.

SHOP DRAWINGS: The Contractor shall submit shop drawings where required, in accordance with the requirements of the S-Pages.

MEASUREMENT AND PAYMENT: The quantity of **TENNIS COURT ACCESSORIES SET** to be paid for under this Item shall be the number of sets furnished and erected complete, in accordance with the plans, specifications, and directions of the Engineer.

The price bid shall be a unit price for each **SET** of Tennis Court Accessories furnished and installed and shall include the cost of furnishing all labor, materials, tools, equipment and other expenses necessary, including concrete footings, setting sleeves, unclassified excavation, crushed stone bed, net, posts, center strap and anchor box all in accordance with the plans and specifications to the satisfaction of the Engineer.

The price bid shall include all delivery charges.

Item No.	Item	Pay Unit
PK-ESCR 184	TENNIS COURT ACCESSORIES SET	EA

END OF SECTION

SECTION PK-ESCR 185 – PAINT LINES 4 INCH – SYNTHETIC TURF

WORK: Under this item, the Contractor shall PAINT LINES 4" WIDTH – SYNTHETIC TURF in accordance with the Plans, Specifications, and the directions of the Engineer.

INTENT: This item is intended to provide initial painted lines on synthetic turf fields which will be maintained and repainted by leagues or organizations who utilize the fields. Leagues shall furnish the equipment and material to repaint the playing lines.

MATERIALS: Unless otherwise herein specified, all materials and methods of construction shall conform to the requirements of the NYCDOT Standard Highway Specifications.

Line Marking Paint: (where shown on the drawings): Paint shall be applied according to the substrate upon which it is being applied.

Polyethylene Fibers: Paint suitable for satisfactory application on polyethylene synthetic fibers shall be durable, 100% acrylic emulsion water-base paint, designed to last a minimum of six (6) months from the time of application. Paint shall be similar to ExtremeLine™ synthetic turf marking paint as manufactured by Pioneer Manufacturing, Cleveland, OH, or approved equal. Drying time shall be 48 to 72 hours. Coverage (undiluted) shall be a minimum of 250 linear feet of four (4") inch wide line per gallon. Color shall be white unless otherwise shown on the drawings.

Nylon Fibers: Paint suitable for satisfactory application on nylon synthetic fibers shall be a durable, 100% acrylic emulsion water-base paint, designed to last a minimum of six (6) months from the time of application. Paint shall be similar to Titan™ Synthetic Turf Marking Paint as manufactured by Pioneer Manufacturing, Cleveland, OH, or approved equal. Drying time shall be 48 to 72 hours. Coverage (undiluted) shall be a minimum 250 linear feet of four (4") inch wide line per gallon. Color shall be white unless otherwise shown on the drawings.

EXECUTION: Prior to painting, areas to receive paint shall be cleaned of debris and groomed so fibers stand up straight. Line paint application temperature shall be between 60 °F and 90 °F. Turf shall be clean and dry at the time of paint application. Lines shall be placed using an airless, high pressure field marking machine such as FieldLazer S100 airless field marker as manufactured by Graco, Inc., Minneapolis, MN, or the Brite Striper 3000 as manufactured by Pioneer Athletics, Cleveland, Ohio, or approved equal. All lines shall be clear and distinct with sharply defined edges. Painting shall be applied to fibers. Every effort shall be made to avoid paint leaking on to adjacent infill material.
All lines shall be placed with a four (4") inch width unless otherwise shown on the drawings.

SUBMITTALS: All submittals shall be in accordance with the requirements of the S-Pages.

Paint Substitution: A written request for paint substitution, along with manufacturer's data sheets shall be submitted for approval a minimum of two (2) weeks prior to the intended date of paint application. All paint substitutions must be approved in writing.

MEASUREMENT AND PAYMENT: The quantity for **PAINT LINES 4" WIDTH – SYNTHETIC TURF** to be paid for under this Item shall be the number of **LINEAR FEET** painted in accordance with the Plans and Specifications to the satisfaction of the Engineer.

The Price bid shall be a unit price per **LINEAR FOOT** of Painted Lines provided and shall include the cost of all labor, materials, equipment and incidentals necessary to complete the Work all in accordance with the Plans, Specifications and directions of the Engineer.

Item No.	Item	Pay Unit
PK-ESCR 185	PAINT LINES 4 INCH – SYNTHETIC TURF	L.F.

END OF SECTION

SECTION PK-ESCR 188 – POLYETHYLENE PIPE, PERFORATED NON PERF

WORK: Under this item, the Contractor shall furnish and lay **POLYETHYLENE CORRUGATED PIPE** or **PERFORATED POLYETHYLENE CORRUGATED PIPE** of the required size, in accordance with the plans, specifications, and directions of the Engineer. All work of connecting and joining to other pipes or drainage structure shall be included under this item.

MATERIALS: Pipe and fittings shall be manufactured by Advanced Drainage Systems, Inc. (ADS) Staybrook Industrial Area, Ludlow, MA, or approved equal. Sizes 4 – 36 inch (N-12) shall have a full circular cross-section, with an outer corrugated pipe wall and an essentially smooth inner wall (waterway). Corrugations for these sizes may be either annular or spiral. All sizes shall conform to the AASHTO classification “Type S” (smooth waterway) or "Type SP" (smooth waterway and Class 2 perforations) as specified.

Pipe manufactured for this specification shall comply with the requirements for test methods, dimensions, and markings found in AASHTO Designations M252 and M294. Pipe and fittings shall be made from Virgin PE compounds which conform with the requirements of cell Class 424420C for 4” through 10” diameters and Class 435400C for 12” through 60” diameters as defined and described in ASTM D3350.

The minimum parallel plate stiffness values when tested in accordance with ASTM D2412 shall be as follows:

Diameter	Pipe Stiffness
4" (100 mm)	50 psi (340 kPa)
6" (150mm)	50 psi (340 kPa)
8" (200mm)	50 psi (340 kPa)
10" (250mm)	50 psi (340 kPa)
12" (300mm)	50 psi (340 kPa)
18" (450 mm)	40 psi (280 kPa)
24" (600 mm)	34 psi (235 kPa)
36" (900 mm)	22 psi (150 kPa)

The fittings shall not reduce or impair the overall integrity or function of the pipe line. Common corrugated fittings may be either molded or fabricated. Common corrugated fittings include inline joint fittings, such as couplers and reducers, and branch or complimentary assembly fittings such as tees, wyes, and end caps. These fittings may be installed by various methods, such as snapon, screw-on, bell and spigot, and wrap around. Couplings shall provide sufficient longitudinal strength to preserve pipe alignment and prevent separation at the joints.

Only fittings supplied or recommended by the pipe manufacturer shall be used. Where designated on the plans, a neoprene or rubber gasket shall be supplied.

SOCK: The perforated pipe shall have a "DC Sock" - a polyester machine knitted envelope factory applied and ready for installation.

INSTALLATION: All pipe shall be laid in reasonably close conformity to line and grade and shall have a full, firm and even bearing at each joint and along the entire length of pipe. Joint misalignment shall not result in offsets, in the interior smooth liner, greater than one-quarter (1/4") inch. Pipe laying shall begin at the downstream end and progress upstream. Any single run of pipe, excluding end sections, shall consist wholly of the same type material unless otherwise directed by the engineer. No section of pipe used shall be less than three feet (3') in length. Installation of the pipe shall be in accordance with ASTM Recommended Practice D2321.

Installation Requirements:

1. Crushed stone, gravel or compacted soil backfill material should be used as the bedding and envelope material around the culvert. The aggregate size should not exceed one-sixth (1/6) of the pipe diameter or four inch (4") diameter, whichever is smaller.
2. The corrugated pipe should be laid on grade, on a layer of bedding material. If native soil is used as the bedding and backfill material, it should be well compacted in six inch (6") layers under the haunches, around the sides, and above the pipe to the recommended minimum height of cover.
3. Either flexible (asphalt) or rigid (concrete) pavements may be laid as part of the minimum cover requirements.
4. Site conditions and availability of bedding materials often dictate the type of installation method used. See plans.
5. The load bearing capability of flexible conduits is dependent on the type of backfill material used and the degree of compaction achieved. Crushed stone and gravel backfill materials typically reach a compaction level of ninety to ninety five percent (90-95%) AASHTO standard density without compaction. When native soils are used as backfill material, a compaction level of eighty five percent (85%) is required. This is the same minimum compaction that is recommended by all culvert pipe manufacturers and can be achieved by either hand or mechanical tamping.

Two types of installations are recommended for H-20 live loads - the heaviest legal highway loads. These are the trench and open ditch installations. The minimum height of cover recommendations are the same for both conditions.

MINIMUM DIMENSIONS TRENCH OR OPEN DITCH INSTALLATIONS

Nominal Diameter	Min. Thickness Of Bedding	Minimum Cover	Minimum Trench Width
4”	3”	12”	21”
6”	3”	12”	23”
8”	3”	12”	26”
10”	4”	12”	28”
12”	5”	12”	30”
18”	6”	12”	39”
24”	6”	12”	48”
36”	6”	12”	64”

Coupling of the pipes shall be performed using Standard ADC (Advanced Drainage Systems) N12 split coupler PRO LINK ST, or PRO LINK 10.8, or PRO LINK 5, or approved equal.

MEASUREMENT AND PAYMENT: The quantity of **POLYETHYLENE CORRUGATED PIPE** to be paid for under this Item shall be the number of linear feet (laying length) of each size pipe, including fittings, measured in its final position, furnished, and placed in accordance with the plans, specifications, and the directions of the Engineer.

The price bid shall be a unit price per **LINEAR FOOT** of laying length Polyethylene Corrugated Pipe of each size shown and shall include the cost of all labor, materials and equipment necessary to complete the work in accordance with the plans and specifications, to the satisfaction of the Engineer. Excavation and broken stone shall be paid for under their respective Items.

MEASUREMENT AND PAYMENT: The quantity of **PERFORATED POLYETHYLENE CORRUGATED PIPE** to be paid for under this Item shall be the number of linear feet (laying length) of each size pipe, including fittings, measured in its final position, furnished, and placed in accordance with the plans, specifications, and the directions of the Engineer.

The price bid shall be a unit price per **LINEAR FOOT** of laying length Polyethylene Corrugated Pipe of each size shown and shall include the cost of all labor, materials and equipment necessary to complete the work in accordance with the plans and specifications including the sock, to the satisfaction of the Engineer.

Excavation and broken stone shall be paid for under their respective contract Items.

Item No.	Item	Pay Unit
PK-ESCR 188	**PERFORATED POLYETHYLENE CORRUGATED PIPE (12”)**	**L.F.**
PK-ESCR 188 P	**POLYETHYLENE CORRUGATED PIPE (12”)**	**L.F.**
PK-ESCR 189	**PERFORATED POLYETHYLENE CORRUGATED PIPE (4”)**	**L.F.**
PK-ESCR 189 B	**PERFORATED POLYETHYLENE CORRUGATED PIPE (6”)**	**L.F.**

END OF SECTION

SECTION PK-ESCR 191 – ASPHALT BLOCK ON CONCRETE BASE

WORK: Under this item the Contractor shall furnish and place **ASPHALT BLOCK ON CONCRETE BASE**, in accordance with the plans, specifications, and directions of the Engineer.

Pattern: The layout of the pavers shall be subject to approval by the Engineer. Layout patterns and paver designs are as indicated on the plans. All edges, borders, and corners of the paved area shall be finished to true and neat lines. Special cutting, soldier courses, color patterns, various shapes, and variations in size and finish are all to be included in the square yard price bid.

MATERIALS: Unless otherwise specified, the materials shall meet the requirements of the NYCDOT Standard Highway Specifications.

Bituminous Setting Bed: Asphalt cement to be used in the bituminous setting bed shall conform to PGA 64-22, ASTM D6373 for Performance Graded Asphalt.

The fine aggregate to be used in the bituminous setting bed shall be clean, hard sand with durable particles and free from adherent coatings, lumps of clay, alkali salts and organic matter. It shall be uniformly graded from "coarse" to "fine" and all passing the No. 4 sieve and meet the gradation requirements when tested in accordance with the standard method of test for sieve or screen analysis of fine and course aggregates ASTM C136.

The dried fine aggregate shall be combined with hot asphalt cement, and the mix shall be heated to approximately 3000 F. at an asphalt plant. The approximate proportion of materials shall be six (6%) percent cement asphalt and ninety-four (94%) percent fine aggregate. Each ton shall be apportioned by weight in the approximate ratio of 120 lbs. asphalt to 1,880 lbs. sand. The Contractor shall determine the exact proportions to produce the best possible mixture for construction of the bituminous setting bed to meet construction requirements.

Tack Coat: Tack coat shall be # 237 2% Neo-Asphalt, Brush Grade as manufactured by Hanover Architectural Products, Hanover, PA, or approved equal. Tack coat shall be an asbestos free, cold applied, rubberized asphalt cement, and shall consist of two percent (2%) neoprene rubberized asphalt with 1500 softening point and 6.5 percent (6.5%) inorganic material.

Asphalt Block: Unless otherwise noted on the plans, all pavers shall be hexagonally shaped asphaltic concrete blocks, eight inches (8") between parallel sides and two inches (2") in thickness, with a permissible plus or minus tolerance of one-sixteenth inch (1/16") in any dimension.

The blocks shall be composed of approximately 6.5%+/- (plus or minus) .5% high melting point oxidized asphalt conforming to ASTM Designation D-312 for Type 3 asphalt and ninety four percent (94%) graded crushed rock aggregate and mineral filler; at the temperature of 300 degrees °F the mix is compressed 4,000 lbs. per square inch by high speed hydraulic presses.

The blocks shall be as manufactured by Hanover Architectural Products Inc. of Hanover, Pa., or approved equal. Top exposed surface of blocks shall have a ground finish, exposing a small aggregate, similar in appearance to Hanover's Matrix #10, unless otherwise noted in the Contract Drawings. The total post-industrial recycled content of the blocks shall be 23.6 %, or approved equal.

Concrete Base: Concrete shall be as described in Section ESCR-4.06 and shall be of the dimensions indicated on the plans.

Foundation: Material for Foundation shall be a straight run of single size aggregate and shall consist of either all one and one-half (1 1/2”) inch stone or all three-quarter (3/4”) inch stone in

accordance with ASTM C33, free from organic or other deleterious material. In addition, Foundation Material may contain no more than five (5%) percent of fines, defined as aggregates passing a No.4 sieve or smaller. The Magnesium Sulfate Soundness loss after ten (10) cycles shall be eighteen (18%) percent or less, as per ASTM C88. Coarse aggregate may be one of the following:

A. Broken Stone or gravel of approved quality and conforming to the requirements of the NYCDOT Standard Highway Specifications

B. Recycled Material consisting of at least ninety five (95%) percent by weight of the following:
   1. Recycled Portland Cement Concrete Aggregate or
   2. Recycled Portland Cement Concrete Aggregate mixed with Stone Gravel.

Laboratory Testing: The Contractor shall, at the direction of the Engineer furnish a certified report by an approved Materials Testing Laboratory showing the materials composition, sieve analysis, plasticity index, and soundness of the representative samples of recycled material which they propose to use.

The Engineer will deliver the samples to an independent testing laboratory. The Contractor shall bear responsibility for all costs associated with laboratory testing. No recycled material shall be delivered to the site until positive test results have been obtained. The Engineer reserves the right to reject on or after delivery any material which does not, in their opinion, meet these specifications.

EXECUTION:

Preparation of Fine Grade: Before any pavement is places upon the fine grade, the fine grade shall be prepared to line and grade and compacted where practicable with an approved self propelling roller weighing not less than ten (10) tons. All hollows and depressions which develop under rolling shall be filled with acceptable material and shall again be rolled. This process of shaping, filling and rolling shall be repeated until no depressions develop.

The Contractor shall remove from the subgrade all debris, foreign material, and all other undesirable material designated by the Engineer. The fine grade shall not be muddy or otherwise unsatisfactory when the pavement is placed upon it. If the fine grade becomes rutted or displaced, due to any cause whatsoever, the Contractor shall regrade same without additional payment.

Spreading: Material for foundation shall be evenly spread on a prepared sub-grade in the position shown on the plans or directed by the Engineer, in four inch (4") layers, each layer to be rolled while wet with a seven (7) to twelve (12) ton tandem roller (or other approved method satisfactory to the Engineer) to the thickness shown on the plans or directed by the Engineer.

Forms: Forms shall be made of substantial material (preferably steel), with suitable metal dividing plates and of sufficient strength to satisfactorily resist distortion when fastened together and secured in place. Forms and dividing plates shall be of depth not less than that of the thickness of the concrete slab, properly located with tops set to the designated sidewalk surface, and left in place until the concrete is set.

Construction: Foundation course shall be wetted immediately before concrete is placed. The concrete shall be placed within the forms and thoroughly tamped until the surface is at the finished grade. The top surfaces shall be finished to true smooth planes by troweling.

When base is constructed in independent slabs, they shall be separated by expansion joints approximately one-quarter (1/4) inch wide. Adjacent to structures, (manholes, hydrants, etc.) expansion joints and sealant shall be installed as directed

Expansion Joint: The Contractor shall furnish and place expansion joint every 400 square feet or as shown on the plans. The expansion joint material shall be one of the following.

A premoulded bituminous fiber joint filler as specified in Section "B" (requires a bond breaker and sealant) or,

A premoulded closed cell expanded polyethylene form joint filler such as MasterSeal 920 by BASF, Inc., Shakopee, MN (requires only sealant) or, an approved equal of any of the above.

If bituminous fiber material is used, a bond breaker such as one-half inch (1/2") width polyurethane tape or five-eights inch (5/8") diameter expanded polyethylene foam backer rod shall be installed as recommended by manufacturer prior to pouring sealant. A bond breaker will not be required for a premoulded foam joint, but sealant is always required.

Sealant: After the concrete is placed, finished, and set, and the bond breaker, if necessary installed, the space as shown in the drawings shall be filled with a poured joint sealer. Joint sealer shall be a 2-component polyurethane base elastomeric sealant such as Sikaflex 2C-SL manufactured by Sika Corporation, Lyndhurst, NJ, or a 1-component polyurethane base elastomeric sealant, such as MasterSeal SL1 manufactured by BASF, Inc., Shakopee, MN, or approved equal. Asphalt cement will not be approved as a sealant. Install sealant in accordance with manufacturer's instructions including allowable minimum temperature of 40 degrees Fahrenheit.

Clean all surfaces of joint. Surfaces must be sound, clean dry and free from oil or grease. Mask sides of joint with masking tape to prevent spillage onto adjacent pavement.

Pour sealant in joints and tool to produce a smooth surface. If bubbles form, wait 5-10 minutes before tooling to break the bubbles. Remove excess sealant promptly as the work progresses and clean the adjacent surfaces. Remove masking tape.

Protection and Curing Concrete: Concrete base shall be carefully protected from the drying effects of the sun and wind, traffic, or other causes by means of suitable guards and coverings, and shall be kept moist for period of three days. Before laying asphalt pavers Engineer shall inspect and approve the concrete base.

Bituminous Setting Bed: To install the setting bed over the surface of the base, place three-quarter inch (3/4") deep control bars directly over the base course. If grades must be adjusted, set wood chocks under depth control bars to proper grade. Set two bars parallel to each other approximately 11 feet long (2" x 6" board). The depth of control bars must be set carefully to bring the paver, when laid, to the proper grade.

Place some bituminous material between the parallel depth control bars. Pull this bed with the striking board over these bars several times. After each passage, low porous spots must be showered with fresh bituminous materials to produce smooth, firm and even setting bed. As soon as this initial panel is completed, advance the first bar to the next position in readiness for striking the next panel. Carefully fill up any depressions that remain after removing the depth control bars and wood chocks.

Bed shall be spread in a continuous professional manner. Installation of base in spotted, different and isolated areas will not be accepted. Bed depth greater than 1-1/8" will not be acceptable. After setting bed has cooled, it shall be rolled by hand with a 100 lb. roller to eliminate sponginess and to prepare the surface for the installation of the tack coat. The setting bed shall be protected against all pedestrian traffic and construction equipment to ensure a level surface for setting pavers.

Tack Coat: The neoprene-modified asphalt adhesive tack coat shall be applied by mopping, squeegeeing or troweling over the top of the bituminous setting bed so as to provide a bond between the bituminous setting bed and the paver.

Setting Pavers: When modified asphalt adhesive is dry to touch, carefully place the pavers by hand, ground finish side up unless otherwise specified, in straight course, with hand tight joints and uniform top surfaces, keeping full alignment according to the patterns shown on the plans. Joints between blocks shall have a maximum width of one-eighth inch (1/8").

Pavers may vary slightly in shade and tonality. Installer shall work from at least four (4) pallets at a time in order to create a uniform blend of paver shades.

All blocks shall be cleaned when placed on the pavement. In no case shall the bituminous setting bed in front of the pavement be disturbed or walked on during the laying of the blocks.

Joint Filler: Upon the completion of the work of laying the blocks in each section to the satisfaction of the Engineer, the surface of the blocks shall be swept clean, and the joints filled with fine sand. All joints shall be filled the same day as the blocks are laid. Filler shall not be applied if the blocks are wet or if the air conditions are such that the fill does not readily enter the joints. Filler shall be well worked into the joints by means of squeegees or other approved devices operating slowly backward and forward. Squeegeeing shall continue until the joints are flush with top surface. Immediately after the joints are filled, the pavement shall be lightly sprayed and cleaned.

DEFECTS: Where defects in material or installation appear in the completed work, such areas shall be removed to the full depth of the course and the defective material replaced with new for the required thickness of pavement at the expense of the Contractor for such removing and replacing.

SUBMITTALS: All submittals shall be in accordance with S-Pages.

Samples: The Contractor shall submit samples of each type of paver they propose to use for approval by the Engineer. The samples shall be clearly labeled with Contract No., manufacturer, and finish. All pavers used on the work shall conform to the approved samples. A three (3) pound bag of stone screenings shall be submitted to the Engineer for approval, with a sieve analysis and the name of supplier attached.

MEASUREMENT AND PAYMENT: The quantity of **ASPHALT BLOCK ON CONCRETE BASE** to be paid for under this item shall be the number of **SQUARE YARDS** of pavement constructed as shown on the plans and in accordance with the specifications and directions of the Engineer. The price bid shall be a unit price per **SQUARE YARD** of Asphalt Block on Concrete Base and shall include the cost of all labor, materials, equipment and incidental expenses necessary to complete the work, including asphalt pavers setting bed and expansion joints, concrete base, foundation material, all in accordance with the plans and specifications to the satisfaction of the Engineer.

Excavation shall be paid for separately under its own contract item.

Item No.	Item	Pay Unit
PK-ESCR 191	Asphalt Block on Concrete Base	S.Y

END OF SECTION

SECTION PK-ESCR 210 – PAINT LINES 4 INCH – LAWN CLAY AREA

WORK: Under this item, the Contractor shall apply **PAINT LINES 4" WIDTH - LAWN & CLAY AREAS** in accordance with the Plans, Specifications, and the directions of the Engineer.

MATERIALS: Paint shall be a vinyl-acrylic latex line marking paint similar to Sapolin PPX Deluxe Athletic Field Marking Paint, as manufactured by Mercury Paint Corp., Brooklyn, NY; or Brite Stripe as manufactured by Pioneer Manufacturing, Cleveland, OH; or approved equal. Dry times shall be as listed by manufacturer.

Color shall be white unless otherwise shown on the drawings.

EXECUTION: Lines shall be placed using a field marking machine. All lines shall be clear and distinct with sharply defined edges. All lines shall be placed with 4" width unless otherwise shown on the drawings.

SUBMITTALS: All submittals shall be in accordance with the requirements of the S-Pages.

Paint Substitution: A written request for paint substitution, along with manufacturer's data sheets shall be submitted for approval a minimum of two (2) weeks prior to the intended date of paint application. All paint substitutions must be approved in writing.

MEASUREMENT AND PAYMENT: The quantity for **PAINT LINES 4" WIDTH - IN LAWN AND CLAY AREAS** to be paid for under this Item shall be the number of **LINEAR FEET** painted in accordance with the Plans and Specifications to the satisfaction of the Engineer.

The Price bid shall be a unit price per **LINEAR FOOT** of Painted Lines provided and shall include the cost of all labor, materials, equipment and incidentals necessary to complete the Work all in accordance with the Plans, Specifications and directions of the Engineer

Item No.	Item	Pay Unit
PK-ESCR 210	PAINT LINES 4 INCH – LAWN AND CLAY AREAS	L.F.

END OF SECTION

SECTION PK-ESCR 214 – CUSTOM 1964 WORLD'S FAIR SITE FURNISHINGS

PK-ESCR 214.1 INTENT

This section describes the products and installation of Site Furnishings in accordance with the plans, specifications and directions of the Engineer.

PK-ESCR 214.2. DESCRIPTION

1. Under this Section, the Contractor shall furnish and install the followings Site Furnishings, in accordance with the Contract Drawings, specifications and directions of the Engineer:
    a. 1964 Worlds Fair Chaise Lounge
    b. 1964 Worlds Fair Bar Stool
    c. 1964 Worlds Fair Chair

PK-ESCR 214.3. MATERIALS

1. Unless otherwise herein specified, all materials and methods of construction shall conform to the requirements of the NYCDOT Standard Highway Specifications.

Steel Supports: Steel supports for recycled plastic lumber shall be hot-rolled carbon steel flat bars and channels of the sizes indicated on the drawings and secure to the plastic slats with vandal resistant screws. All steel supports shall be hot dipped galvanized or stainless steel as per this specification.

Touch-up and Repair: For minor damage caused by grinding, installation or transportation, touchup galvanized finish in conformance with manufacturer's recommendations. Provide touch-up such that repair is not visible from a distance of six (6') feet.

BENCH SLATS – RECYCLED PLASTIC LUMBER: All slats for benches shall be fabricated from at least ninety percent (90%) post-consumer recycled plastic, dimensions as indicated on the plans. Recycled plastic lumber shall be Selectforce as manufactured by Bedford Technology, LLC Worthington, MN, PolyTuf™ as manufactured Tangent Technologies, LLC, Aurora, IL, or approved equal. Color to be Cedar, Brown or Weathered Wood unless otherwise indicated on the plans.

Recycled plastic lumber shall comply with or be tested in accordance with the following.

ASTM D6108 Standard Test Method for Compressive Properties of Plastic Lumber and Shapes

ASTM D6109 Standard Test Method for Flexural Properties of Unreinforced and Reinforced Plastic Lumber

ASTM D6111 Standard Test Method for Bulk Density and Specific Gravity of Plastic Lumber and Shapes by Displacement

ASTM D6112 Standard Test Methods for Compressive and Flexural Creep and Creep Rupture of Plastic Lumber and Shapes

ASTM D6117 Standard Test Methods for Mechanical Fasteners in Plastic Lumber and Shapes

ASTM D1248 Standard Specifications for Polyethylene Plastics Extrusion Materials for Wire and Cable

Recycled Plastic Lumber shall be fabricated primarily from recycled High Density Polyethylene (HDPE) and recycled Low Density Polyethylene (LDPE). HDPE resins shall meet the requirements of ASTM D1248 for Type III or IV (high density), Grade G7. Lumber shall contain no toxic materials, but shall contain UV-inhibited pigments. Composition and mechanical properties shall be as follows:

Minimum Recycled Content 90%

Minimum High Density Polyethylene 70%

Maximum Percentage of Materials other than Polyolefins 5%

Minimum Specific Gravity (ASTM D6111) 0.02 lbs-in3

Minimum Flexural Modulus (ASTM D6109) 85,000 psi

Minimum Screw Pull-out Strength (ASTM D6117) 700 lbs

Flame Spread, Class C or better, tested in accordance with ASTM E84.

Coefficient of Thermal Expansion (ASTM D6341), in the range of -10□C to 30□C, shall not exceed 70 x 10-6/□F.

Recycled Plastic Lumber shall not absorb moisture, corrode, rot, warp, splinter, or crack and shall not contain fiberglass or any material that will be irritating in contact with skin.

Fabrication Tolerances: Ends shall be smooth with clean cuts. Cross-sections shall not have voids greater than 1/2" dia. Voids of 1/2" dia. or less shall be filled as per manufacturer's specifications. All edges shall have 1/4" radius. Maximum variation from flat surface across section shall be 1/8".

Delivery and Storage: Keep recycled plastic lumber protected at all times against exposure to extreme heat or impact. All material shall be bundled and fully supported during shipping and storage to prevent creep. Any lumber that is damaged or excessively scratched will be rejected and replaced with new. All material must be straight and true when placed in the construction.

Hardware: Bolts, locknuts, and washers used to secure slats to standards shall be stainless steel or hot dipped galvanized. Bolt or wood screw used for mid section steel support strap (RPL only) shall be a vandal resistant type, either stainless steel or hot-dipped galvanized. Type and dimensions of all bolts, nuts, and washers shall be as indicated on the plans. Anchor bolts used to secure the benches to pavements may be either stainless steel or hot-dipped galvanized steel. Bolts for securing slats shall be provided with nylon lock nuts so as to render the connection vandal resistant.

Concrete: Concrete for slabs or footings shall be as described in Section ESCR-4.06 and shall be of the dimensions indicated on the plans.

PK-ESCR 214.3.1. REFERENCES

ASTM Designation A536: Bench standards shall be of cast ductile iron. The tensile strength shall meet a minimum of 65,000 psi, in accordance with ASTM designation A536, Grade 65-45-12.

ASTM A153: Standards shall be hot dipped galvanized in accordance with ASTM A153. Any resulting dimples or sharp points shall be ground smooth.

PK-ESCR 214.3.2. SUBMITTALS

A) Product Data: Submit manufacturer's product data, storage and handling requirements and recommendations, installation methods and available colors, styles, patterns and textures.

B) Shop Drawings: Show fabrication and installation details. Include plans, elevations, sections, and details of RPL slat and metal fabrications and their connections. Show anchorage and accessory items.

C) Sample: The Contractor shall submit a twelve inch (12") sample of the recycled plastic lumber slat for surface and color approval. Required test results shall be submitted if an approved equal manufacturer is proposed.

PK-ESCR 214.3.3. QUALITY CONTROL

A) Foundry Certificates: Certifying Ductile Iron used in bench standards shall be submitted. The certificate shall be on foundry letterhead, dated and signed by the manufacturer with the Contract No., Contractor name, and Class of Ductile Iron provided.

PK-ESCR 214.3.4. DELIVERY, STORAGE, AND HANDLING

A) Delivery: Deliver materials to site in manufacturer's original, unopened containers and packaging, with labels clearly identifying product name and manufacturer.

B) Storage: Store materials in clean, dry area in accordance with manufacturer's instructions. Keep materials in manufacturer's original, unopened containers and packaging until installation.

C) Handling: Protect materials and finish during handling and installation to prevent damage.

PK-ESCR 214.3.5. WARRANTY

A) Warranty Information:

a. Products will be free from defects in material and/or workmanship for a period of three years from the date of substantial completion.

b. The warranty may exclude damage resulting from accident, misuse, tampering, negligence, or abuse.

c. Products shall be repaired or replaced to the satisfaction of the Engineer any items found defective upon inspection by an authorized manufacturer service representative and Engineer.

PK-ESCR 214.4. METHODS

The following methods of installation shall be used.

A. Examination:

1. Examine areas to receive the Site Furnishings.

2. Notify Engineer of conditions that would adversely affect installation or subsequent use.

3. Do not begin installation until unacceptable conditions are corrected and

acceptance verified in writing by Engineer.

B. Installation:

1. Benches shall be pre-assembled before being installed in their final location and properly secured in place by anchor bolts drilled into concrete footings or slab, as indicated on the plans.

C. Adjusting:

1. Finish Damage: Repair minor damages to finish in accordance with manufacturer's instructions and as approved by Engineer.

2. Component Damage: Remove and replace damaged components that cannot be successfully repaired as determined by Engineer.

D. Cleaning: Clean Site Furnishings promptly after installation in accordance with manufacturer's instructions. Do not use harsh cleaning materials or methods that could damage finish.

E. Protection: Protect installed Site Furnishings to ensure they will be without damage or deterioration at time of Substantial Completion.

PK-ESCR 214.5. MEASUREMENT

The quantities of Site Furnishings to be measured for payment shall be the quantity of each type Site Furnishing installed at the site to the satisfaction of the Engineer.

PK-ESCR 214.6. PRICES TO COVER

The prices bid shall be the unit price per EACH type site furnishing Item covered under this Section and shall include the cost of furnishing all labor, materials, equipment, insurance, and incidentals necessary to furnish, assemble and install the Site Furnishings including, but not limited to, chair arm rests and glides, and hardware, all in accordance with the Contract Drawings, the specifications and the directions of the Engineer.

Payment will be made under:

Item No.	Item	Pay Unit
PK-ESCR 215	**1964 WORLDS FAIR BAR STOOL**	**EA**
PK-ESCR 215 A	**1964 WORLDS FAIR CHAIR**	**EA**
PK-ESCR 8041964	**WORLDS FAIR CHAISE LOUNGE CHAIR**	**EA**

END OF SECTION

SECTION PK-ESCR 221 – STAINLESS STEEL HAND RAIL

WORK: Under this Item, the Contractor shall furnish and erect STAINLESS STEEL HAND RAIL for steps and/or ramps where shown on the plans or directed by the Engineer, in accordance with the plans, specifications, and directions of the Engineer. All handrail, including extensions, shall comply with Americans with Disabilities Act (ADA) provisions as described in ANSI A117.1-1998 (or most recent edition).

MATERIALS: All posts and rails shall be 316L in accordance with ASTM Designation

Tubing: ASTM A 554, Grade MT 316L. All materials as delivered shall be in condition for erection without field fitting or cutting. Stainless steel handrail shall be as manufactured by

1. Architectural Metal Works.
2. Blum, Julius & Co., Inc.
3. Blumcraft of Pittsburgh. or approved equal.

WELDING: Welding shall be done by competent mechanics as specified under Section “B” and all welds shall be ground smooth.

ERECTION: The posts shall be set in holes which shall have been formed in the steps or footings, as shown on the plans or directed by the Engineer. After the posts have been set in place and property supported to hold them to line and grade, the remaining space shall be neatly filled with a grout consisting of one (1) part cement and two (2) parts sand. Color of grout shall match surrounding pavement or stone.

SUBMITTALS: All submittals shall be in accordance with the requirements of the S-Pages.

Sample: Submit one twelve (12”) inch section of stainless steel pipe for approval.

Shop Drawings: The Contractor shall submit shop drawings including complete details of handrail construction, height, post spacing layout, dimensions and concrete footing detail. Stainless steel handrail shall be fabricated in strict accordance with the plans and shop drawings.

Certification: Submit certification that the materials used comply with this specification.

MEASUREMENT AND PAYMENT: The quantity of STAINLESS STEEL HANDRAIL to be paid for shall be the number of LINEAR FEET of stainless steel handrail, including handrail extensions furnished and erected complete in accordance with the plans, specifications and directions of the Engineer.

The price bid shall be unit prices per LINEAR FOOT of handrail and shall include the cost of all labor, materials, equipment and incidental expenses necessary to complete the work, all in accordance with the plans and specifications to the satisfaction of the Engineer.

Excavation, concrete for piers, and core drilling, if required, shall be paid for separately under their respective contract items.

Item No.	Item	Pay Unit
PK-ESCR 221	STAINLESS STEEL HANDRAIL	LF

END OF SECTION

SECTION PK-ESCR 400 RECONSTRUCT DRAINAGE STRUCTURE

PK-ESCR 400.1 WORK: Under this Item, the Contractor shall reconstruct drainage structure including removing the frame and grates (and curb piece if applicable) and reconstructing the existing structure, including providing new frame and grate and setting the new frame to grade as shown on the plans, all in accordance with the plans, specifications, and directions of the Engineer.

PK-ESCR 400.2 MATERIALS:

Concrete: Concrete shall be mixed in the proportions of one (1) part Portland Cement, two (2) parts fine aggregate and four (4) parts coarse aggregate, with the maximum size of stone to be one inch (1").

Mortar: Mortar shall be composed of one (1) part Portland Cement and a maximum of two (2) parts sand, with not more than five percent (5%) of the cement content containing hydrated lime.

Reinforcement: Reinforcement and dowels where required shall be deformed steel bars.

Brick Masonry: Shall meet those requirements as shown on the details located in Appendix A of the Contract Drawings.

Ladder rungs: Ladder rungs shall be constructed of wrought iron and be hot-dipped galvanized after bending.

Hoods: Hoods shall be of the type existing and shall be installed with wall plates.

Frames, Grate & Covers: Shall be according to the appropriate Standard Detail in Appendix A of the Contract Drawings.

Incidental Work: The Contractor shall furnish materials for and do all incidental work to complete the reconstruction of drainage structures, including setting and adjusting frames and plastering.

PK-ESCR 400.3 METHOD: The Contractor shall debride and expurgate all existing drainage structures of all rubbish, dirt, debris, and any other materials to the original depth of the basin, prior to reconstructing the drainage structures.

All excess materials, dirt, and debris generated by the Contractor's operations shall be removed from the site and disposed of at the Contractor’s expense. The existing frame, grate, and curb piece shall also be discarded or become the property of the Contractor.

The existing drainage structure shall then be reconstructed in strict accordance with the Standard Details in Appendix A of the Contract Drawings. After the drainage structures have been reconstructed, they shall be maintained in satisfactory operating condition, until Substantial Completion. Prior to, or as part of the final inspection, the Contractor, in the presence of the Engineer, shall conduct such inspections and tests as are necessary to determine that the drainage facilities are in clear and functional condition. Such condition being defined as equal to that achieved upon completion of the initial clearing and it shall be the Contractor's responsibility to perform such additional clearing as is necessary to achieve such conditions, at their own expense and at no additional cost.

The Contractor is responsible for any damage caused to existing structures by their operations and shall make repairs with no additional cost.

PK-ESCR 400.4 MEASUREMENT AND PAYMENT: For reconstruct drainage structure in complete accordance with the plans, specifications, and directions of the Engineer, the Contractor shall receive the unit price bid.

The price bid shall be a unit price for **EACH** Drainage Structure Reconstructed, regardless of size, and shall include the cost of all labor, materials, and equipment, including new frame and grate, brick masonry, concrete and any other incidental expenses necessary to complete the work in accordance with the plans and specifications, to the satisfaction of the Engineer.

Item No.	Item	Pay Unit
PK-ESCR 400	RECONSTRUCT DRAINAGE STRUCTURE	EA

END OF SECTION

SECTION PK-ESCR 401 – ADJUST TOP OF UTILITY STRUCTURE TO GRADE

PK-ESCR 401.1. **WORK:** Under this item, the Contractor shall remove existing frames and covers of utility structures (i.e. existing catch basins, manholes, drain inlets and electric covers) and reset them to grades shown on the plans or as directed by the Engineer. Work under this item includes excavation.

PK-ESCR 401.2. **MATERIAL:** All changes shall be made with acceptable brick laid in Portland cement mortar of one (1) part cement and two (2) parts of fine aggregate.

PK-ESCR 401.3. **METHOD**: All work should be done in a professional manner by competent masons, but if the frames or covers are broken through carelessness of the Contractor, the Contractor shall replace them with new ones equal to those broken, at the Contractor's own expense.

PK-ESCR 401.4. **MEASUREMENT AND PAYMENT:** The quantity of **ADJUST TOP OF UTILITY STRUCTURE TO GRADE,** to be paid for under this item shall be the number adjusted in accordance with the plans and specifications and the directions of the Engineer.

The price bid shall be a unit price for **EACH** head adjusted and shall include the cost of all labor, materials, equipment and incidental expenses including unclassified excavation, necessary to complete the work in accordance with the plans and specifications to the satisfaction of the Engineer.

Item No.	Item	Pay Unit
PK-ESCR 401	ADJUST TOP OF UTILITY STRUCTURE TO GRADE	S.F.

END OF SECTION

SECTION PK-ESCR 402 CATCH BASIN COVER AND FRAME WITH BALLAST SCREEN

PK-ESCR 402.1 WORK: Under this Item, the Contractor shall furnish and install catch basin cover and frame with ballast screen, including vandal resistant bolts, in accordance with the plans, specifications, and as directed by the Engineer.

The purpose of this item is to construct a catch basin with ballast screen in areas where safety surfacing is installed to ensure drainage above and below the safety surfacing. Work shall include all materials required to ensure drainage and shall include, but are not limited to, rectangular catch basin cover (grate), frame with ballast screen, concrete, steel reinforcement, and broken stone.

PK-ESCR 402.2 MATERIALS:

Catch Basin Cover and Frame With Ballast Screen: Catch Basin cover, frame, and ballast screen shall be cast gray iron per ASTM A48, latest revision, Class 35B. Catch basin assembly shall be provided with bolting option. Catch Basin cover (grate) shall be pattern number 7516-0600, ballast screen shall be 7516-0601, and the frame shall be 7516-0602.

Vandal Resistant Bolt: Each cover shall be furnished with two (2) Stainless Steel Penta-Head bolts. Typical plastic end caps are to be supplied with hardware and installed on Penta-Head bolts.

Broken Stone: Broken Stone shall consist solely of crushed ledge rock. Stone shall be No. 3A size and shall be of approved size and quality as directed by the Engineer. Material substitutions will not be approved under any circumstances. All recycled materials will be rejected.

PK-ESCR 402.3 INSTALLATION:

Concrete: Steel bar reinforcement shall be placed as shown prior to installation of concrete. Class B-32 concrete shall be installed on two to four sides of the frame as shown on contract drawing. The Contractor shall furnish and place forms as required and shall remove them as directed by the Engineer. All finished concrete shall be protected and cured as directed by the Engineer.

Broken Stone: Broken stone shall be placed as shown on the Standard Details in Appendix A of the Contract Drawings.

Cover and Frame with Ballast Screen: Precast Concrete for Drain Structure shall be installed and paid for separately. The cover (grate) and ballast screen shall be installed on the frame as shown on the Standard Details in Appendix A of the Contract Drawings. Immediately prior to the final inspection the Contractor shall clean cover surfaces that show evidence of loose mill scale, non-adherent rust, peeling paint and other deleterious matter in accordance with SP-2, Hand Tool Cleaning, a method generally confined to wire brushing, sandpaper, hand scrapers or hand impact tools. Unless otherwise directed by the Engineer, covers shall be painted with two coats of black silicone alkyd paint.

PK-ESCR 402.5 SUBMITTALS: All submittals shall be as directed by the Engineer.

Foundry Certificates: Foundry Certificates shall be submitted on pattern holder's letterhead certifying the cover, frame, and ballast screen is manufactured of materials that meet this specification.

PK-ESCR 402.6 MEASUREMENT AND PAYMENT: For furnishing and installing catch basin cover and frame with ballast screen in accordance with the plans, specifications, and directions of the Engineer, the Contractor shall receive the unit price bid.

The price bid shall be a unit price for **EACH** Catch Basin Cover & Frame With Ballast Screen, furnished and installed, and shall include the cost for all labor, material, equipment, and incidental

expenses necessary to complete the work, including frame, cover, ballast screen, concrete, steel reinforcement, broken stone, vandal resistant bolts, and painting all in accordance with the plans and specifications, to the satisfaction of the Engineer.

Excavation, Precast Concrete for Drain Structure, and Safety Surfacing shall be paid for separately under their respective contract items.

Item No.	Item	Pay Unit
PK-ESCR 402	CATCH BASIN COVER AND FRAME WITH BALLAST SCREEN	EA

END OF SECTION

SECTION PK-ESCR 403 – DUCTILE IRON SEWER PIPE – 18" DIA.

PK-ESCR 403.1. **WORK:** Under this item, the Contractor shall furnish and lay **DUCTILE IRON SEWER PIPE** of the inside diameter sizes called for and shown on the plans or as directed by the Engineer.

PK-ESCR 403.2. **MATERIALS:** Ductile Iron Sewer Pipe shall consist of bell and spigot type Ductile Iron Pipe sections with Mechanical Joints (MJ fittings), and shall conform to the American National Standards Institute C151 and American Water Works Association A21.51, Thickness Class 56. Pipe shall be laid true to line and grade when bells upstream.

PK-ESCR 403.3. **LAYING**: If the the Engineer determines the foundation is good, firm earth the earth shall be pared or molded to give a full support to the lower third of each pipe. If the Engineer determines the foundation is unstable, or other conditions prevent a proper bearing for the pipe, a bedding of broken stone shall be installed as shown on the details located in Appendix A of the contract drawings "Standard Detail Sheet 'Drainage Details-No. 2". If the excavation has been made deeper than necessary, a bedding of broken stone shall be installed at the Contractor's expense.

When the pipe is to be installed under a roadway a concrete cradle shall be laid to provide a full, firm and even bearing as directed by the Engineer.

Trenches shall be promptly backfilled after the installation of pipe or completion of structures but no backfilling shall be done until the work has been inspected and approved by the Engineer.

Trenches shall be backfilled with clean fill, hand placed and tamped with six (6) inch layers to completely fill all spaces adjacent to the pipe.

PK-ESCR 403.4. **CONNECTIONS:** The Contractor shall do all the work necessary to join the Ductile Iron Sewer Pipe to the existing sewer as shown on the plans. The cost for doing this shall be included in the unit price bid for this item.

PK-ESCR 403.5. **MEASUREMENT AND PAYMENT:** The quantity of **DUCTILE IRON SEWER PIPE** to be paid for under this item shall be the number of **LINEAR FEET** (laying length) of each size pipe, including fittings, furnished, placed and measured in its final position, in accordance with the plans and specifications and the directions of the Engineer.

The price bid shall be a unit price per **LINEAR FOOT** of laying length of Ductile Iron Sewer Pipe of each size shown and shall include the cost of all labor, materials and equipment necessary to complete the work, including delivering, handling and laying of pipe, connection and fittings, backfilling with clean fill, all in accordance with the plans and specifications to the satisfaction of the Engineer.

Excavation, Concrete and Broken Stone shall be paid separate for under their respective items.

Item No.	Item	Pay Unit
PK-ESCR 403	DUCTILE IRON SEWER PIPE – 18" DIA.	L.F.

END OF SECTION

SECTION PK-ESCR 404 – DUCTILE IRON SEWER PIPE – 24" DIA.

PK-ESCR 404.1. **WORK:** Under this item, the Contractor shall furnish and lay **DUCTILE IRON SEWER PIPE** of the inside diameter sizes called for and shown on the plans or as directed by the Engineer.

PK-ESCR 404.2. **MATERIALS:** Ductile Iron Sewer Pipe shall consist of bell and spigot type Ductile Iron Pipe sections with Mechanical Joint Gasket Joints and shall conform to the American National Standards Institute C151 and American Water Works Association A21.51, Thickness Class 56. Pipe shall be laid true to line and grade when bells upstream.

PK-ESCR 404.3. **LAYING**: If the foundation is good, as determined by the Engineer, firm earth the earth shall be pared or molded to give a full support to the lower third of each pipe. If the foundation is unstable as determined by the Engineer, or other conditions prevent a proper bearing for the pipe, a bedding of broken stone shall be installed as shown on the details located in Appendix A of the contract drawings "Standard Detail Sheet 'Drainage Details-No. 2". If the excavation has been made deeper than necessary, a bedding of broken stone shall be installed at the Contractor's expense.

When the pipe is to be installed under a roadway a concrete cradle shall be laid to provide a full, firm and even bearing as directed by the Engineer.

Trenches shall be promptly backfilled after the installation of pipe or completion of structures but no backfilling shall be done until the work has been inspected and approved by the Engineer.

Trenches shall be backfilled with clean fill, hand placed and tamped with six (6) inch layers to completely fill all spaces adjacent to the pipe.

PK-ESCR 404.4. **CONNECTIONS:** The Contractor shall do all the work necessary to join the Ductile Iron Sewer Pipe to the existing sewer as shown on the plans. The cost for doing this shall be included in the unit price bid for this item.

PK-ESCR 404.5. **MEASUREMENT AND PAYMENT:** The quantity of **DUCTILE IRON SEWER PIPE** to be paid for under this item shall be the number of **LINEAR FEET** (laying length) of each size pipe, including fittings, furnished, placed and measured in its final position, in accordance with the plans and specifications and the directions of the Engineer.

The price bid shall be a unit price per **LINEAR FOOT** of laying length of Ductile Iron Sewer Pipe of each size shown and shall include the cost of all labor, materials and equipment necessary to complete the work, including delivering, handling and laying of pipe, connection and fittings, backfilling with clean fill, all in accordance with the plans and specifications to the satisfaction of the Engineer.

Excavation, Concrete and Broken Stone shall be paid separate for under their respective items.

Item No.	Item	Pay Unit
PK-ESCR 404	DUCTILE IRON SEWER PIPE – 24" DIA.	L.F.

END OF SECTION

SECTION PK-ESCR 405 - PRECAST CONCRETE DRYWELL

PK-ESCR 405.1 **WORK:** Under this Item, the Contractor shall furnish and install precast concrete drywell of the sizes and at the locations shown, in accordance with the plans, or as directed by the Engineer.

PK-ESCR 405.2 **MATERIALS:** Precast Concrete Drywell shall be in accordance with ASTM C913 — "Standard Specification for Precast Concrete Water and Wastewater Structures".

Covers: Concrete cover shall be 2' - 6" diameter with a min. of P earth cover.

Broken Stone No. 3 or No. 4: Broken stone shall consist solely of crushed ledge rock. Stone shall be No. 3 or No. 4 size.

Geotextile-Drainage: Geotextiles used in drainage applications shall be Class 2 and shall conform to AASHTO-M-288 properties for drainage geotextiles.

PVC Pipe: The PVC piping is to be twenty four inches (24") in diameter, and shall meet the requirements of ASTM D1785 "Standard Specification for Poly (Vinyl Chloride) (PVC) Plastic Pipe, Schedules 40, 80, and 120",with one inch (1") holes drilled four inches (4") on center.

PK-ESCR 405.3 **INSTALLATION:** The Precast Concrete Drywell shall be installed as shown on the details located in Appendix A of the contract drawings “Standard Detail Sheet Stormwater Management Details No. 8.”

PK-ESCR 405.4 **INCIDENTAL WORK:** The Contractor shall furnish materials for all incidental work to complete the structures, including the work of providing openings for connecting piping, drilling, and setting the twenty four inch (24") PVC pipe, installation of the No.3 or No.4 Broken Stone. No additional payment will be allowed for any incidental work.

PK-ESCR 405.5 **SUBMITTALS:** The Contractor shall submit the following for review and approval prior to manufacture:

SHOP DRAWINGS: The Contractor shall submit Shop Drawings showing layout and construction details for top slab, frames & covers, circular footings, stormwater drainage ring, and joints. No work or ordering of materials shall commence until receipt of approval by the Engineer.

PK-ESCR 405.6 **MEASUREMENT AND PAYMENT:** For each precast concrete drywell furnished and installed in accordance with the plans, specifications, and directions of the Engineer, the Contractor shall receive the unit price bid.

The price bid shall be a unit price for **EACH** Precast Concrete Dry Well and shall include the cost of all labor, materials, and equipment, including concrete, PVC pipe, No.3 or No.4 broken stone, concrete cover, shipping charges, dewatering, and incidentals, in accordance with the plans and specifications, to the satisfaction of the Engineer.

Item No.	Item	Pay Unit
PK-ESCR 405	PRECAST CONCRETE DRYWELL	EA

END OF SECTION

SECTION PK-ESCR 450 – IP PTZ HDTV DOME CAMERA AND MOUNTING ASSEMBLY

GENERAL:

Under this item, the contractor must furnish and install new IP PTZ HDTV Dome cameras with matching IP Camera Dome mounts, in accordance with the Contract Documents and the requirements of New York City Department of Transportation (NYCDOT) Signals.

The work must include, but is not limited to furnishing, installation and acceptance testing of active equipment, mounting bases, arms, cables, terminations and final connections on line and load sides of existing ITS installations.

Install all newly supplied equipment, as specified under this contract and coordination with any incidental equipment as supplied by others.

All work must be done in compliance with the latest published edition of NFPA 70 National Electrical Code (NEC) including the NYC Electric Code amendments to the NEC.

DESCRIPTION:

This work must consist of furnishing and installing IP PTZ HDTV Dome Camera Assemblies and mounts of the type described in this specification, in accordance with the contract documents and as directed by the Engineer.

MATERIALS:

To ensure compatibility and interchangeability with equipment furnished under previous projects, the IP Camera assembly must support the NTCIP 1205 protocol from the manufacturer with no additional software development or external translation devices.

The IP Camera manufacturer must provide documentation verifying NTCIP 1205 compliance for at least 1 year in their product line. The IP Camera Assembly must be compliant with the latest version of the NTCIP Standards, as defined by AASHTO, ITE, and NEMA.

General requirements for material, construction, installation, testing, and documentation are presented in this specification. Where material or construction requirements presented in this specification conflict with the proposed model, the manufacturer and installer must provide written documentation describing the conflict and the manufacturer's plan for meeting the requirements of this specification. All materials furnished, assembled, fabricated or installed must be new, corrosion resistant and in strict accordance with the details shown in the contract documents and this specification. Each IP PTZ HDTV Dome Camera Assembly must deliver high quality full-motion video during day or night operation with the video and control/status data transmitted over the NYC DOT communications network (specified elsewhere).

Each IP PTZ HDTV Camera Assembly must consist of a solid-state color/monochrome IP camera with infra-red cut filter, motorized zoom lens, pressurized enclosure, pan/tilt/zoom unit, integral camera control receiver, and all cabling required to interface the IP PTZ HDTV Dome Camera Assembly with associated equipment in the ITS field cabinet.

The IP PTZ HDTV Camera Assembly must be designed for mounting on poles or pendant attached to Overhead structures as shown in the plans. Connections between the equipment must be through water proof connectors.

Repair, replacement, and parts service for the IP Camera Assembly must be available within the contiguous United States or Canada.

Each IP PTZ HDTV Camera Assembly Outdoor Dome mount camera must meet the following minimum requirements:

CAMERA HOUSING:

Weight	10.5 Lbs.
Dimensions	8.2 x 10.6 inches
Operating Temperature	-58 F to +122 F Absolute Limit +165 F per NEMA TS2 60 watts
Humidity	10 – 100% RH (condensing)
Wind Survivability	Meet all performance criteria when subjected to a 90 mph Wind, Able to withstand a 125 mph wind gust
Electrical Supply	(a.) 120 VAC ± 10% at 60 Hz. For VoIP units operating at 24 VAC, a 115/24, VAC mid span transformer must be located within the ITS equipment cabinet which is provided under other pay items in this contract.
Electrical POE++	24 VAC / 48 VAC (4 wire).
Electrical Requirements	115 VAC., 66 Watts max. typical 14 W to 51 Watts
Electrical Rating Dome Casing	NEMA 4x IP67
Electrical Interfaces	(a.) Power and control cables between the IP Camera Assembly and the associated field cabinet must be in accordance with the manufacturer's technical support recommendations. Shop drawings showing the configuration of the harness along with the manufacturer's recommendations must be submitted to the Engineer for approval prior to fabrication. (b.) Weatherproof Cat 6 Ethernet cable must be used to connect the camera to the field IP communications interface. (c.) Control signals between the camera assembly and a TMC controlling device must be via the NTCIP 1205 protocol (d.) Electrical connections between the positioning device and camera/lens must be through a pre-wired feed rather than through a wiring harness.
Electrical Connectors	RJ-45 10Base T/ 100Base-TX PoE Weather Proof Push-Pull connector (IP67) included
Enclosure Casing	Enclosure Material Main body must be painted, or powder coated anodized aluminum
Enclosure Dome	PC (polycarbonate) ¼ inch thick optically clear dome

	Smoked dome enclosure (optional)
Hardware	304/316 Stainless Hardware only on exposed surfaces
Camera Model	Q6075-E
Camera Mount Pole Box & Bracket	T91B57 T91B61
Camera Mount Vert. Pendant	T91B63

CAMERAS:

Image Sensor	CMOS ½.8" Progressive scan
Lens	4.25 – 170 mm Aperture: F 1.6-4.95 FOV: 65.1º - 2.00º Horizontal FOV: 39.1º - 1.18º Vertical Auto Focus Auto Iris
Minimum Illumination	Color: 0.1 lux @ 30 IRE, F1.6 B/W: 0.002 lux @ 30 IRE, F1.6 Color: 0.15 lux @ 50 IRE, F1.6 B/W: 0.003 lux @ 50 IRE, F1.6
Resolution	HDTV 1080p 1920 x 1080 To 320 x 120
Format Day/Night	Automatic, removable Infrared cut filter
Pan Tilt Zoom (PTZ)	Pan: 360º Endless, 0.005º - 450º /s Tilt: 220º, 0.05º - 450º /s Zoom: 40x Optical, 12x Digital, 480x Total Zoom E Flip 256 Zoom Presets On Screen Direction indication Adjustable zoom speed Focus recall
Imager Settings	Manual Shutter time Compression Brightness Sharpness White Balance Compensation Backlight Compensation Automatic defog Wide Dynamic Range
Video	Multiple, individually configurable streams H.264 H.265 JPEG – Motion

	Controllable Frame Rate & bandwidth Max Frame Rate: 60 fps @ 60 Hz in HDTV (1080p)
Digital Storage	Support for: SD/SDHC/SDXC cards Support for record to NAS Storage

IP VIDEO:

IP Format	802.3u, 100 Base-T, MDI-X auto-sensing, full duplex.
Network Protocol	TCP, UDP, IPv4, IGMP, ICMP, DNS, DHCP, RTP, RTSP, SNMP, RTCP, NTP, HTTP, SOAP, HTTPS, ARP,
	FTP, SMTP, Telnet, ONVIF, Profile S, NTCIP 1205.
Media Players	VLC, Quick Time, or any media player compliant with RFC 2326, 3984, 3550, 2435. ISO/IEC 13818-1.
Security - 4 Levels:	Admin, Open User, Anonymous [User Name + Password], Digest Authentication
Updates	File upload over network using camera web server interface
Video Streams	Dependent on processing budget – 5 or more.
Video Codec	H.264 Base, Main and High Profiles, MJPEG.
Video Protocols	RTSP/RTP, RTSP Interleave, HTTP Tunneling, RTP Multicast
Video Resolution	1080p, 720p, D1, CIF, OCIF
Video Data Rate	256 KBps to 8 Mbs
Video Rate Control	Variable or Constant Bit Rate.
Video GOV	1 to 600, 30 default.
Video Latency	Four frames (0.133 sec).
Video Transmission	99.999% error free.

NTCIP:

To ensure compatibility and interchangeability with equipment furnished in previous and future contracts, the IP Camera Assemblies must be compliant with the latest version of the NTCIP Standards, as defined by AASHTO, ITE, and NEMA.

Surge Protection:

Surge protection devices (SPD) must be provided, installed within the ITS equipment cabinet for each IP PTZ HDTV Dome camera.

Provide 35 mm DIN SST Rail mount

SPD Model: BSPD48RJ45, UL 497B listed, IP10, Cat 6, RJ-45
as Manufactured by: Cooper Bussmann Corp.

SPD must be CAT 6 PoE+, RJ-45 jack connected.

Surge Ratings: C2 Nominal discharge current (8/20μs) line PG (I_n) = 2.5 kA

IP PTZ DOME CAMERA MANUFACTURERS:

The IP PTZ HDTV Dome Camera equipment must be completely integrated with and compatible with the existing NYS / NYC Department of Transportation Regional Traffic Monitoring Center (RTMC) equipment including the DOT existing ITS communications and infrastructure.

NYC DOT RTMC & DOT-Signals approved IP PTZ HDTV Dome Camera equipment system manufacturer / integrators must be:

AXIS Communications, Inc.

Mid-Atlantic Regional Office and Axis Experience Center
1001 19th Street N. Suite 1400.
Arlington, VA, 22209
1-800-444-2947

No alternates will be approved.

CONSTRUCTION DETAILS:

The Contractor must install and program the specified IP Camera field equipment at locations shown on the plans. Each camera assembly must be installed such that the line of sight of the camera is in the center line of the desired field of view (FOV), when the camera is in the midpoint of the desired motion, between the limit stops.

Each IP PTZ Dome Camera assembly must be installed such that the home position for each camera must be set to true North.

The Engineer will provide the field of view of each camera, the limit settings of its vertical and horizontal movements and the programmable parameters for the Contractor's placement on a drawn to scale site plan of each IP PTZ Dome camera site location. The Contractor's intended FOV, Camera mounting and 2D aiming plans must be reviewed and confirmed with the Engineer and the NYCDOT, prior to installation.

The Contractor must furnish and install the mounting hardware, including brackets, mounting plates, bolts, safety lanyards, connectors, cabling between the camera housing and ITS equipment cabinet(s), and weather heads required for the installation of the camera, cable, mount assembly.

The Contractor must connect and test the control, power and video cables between the camera assembly and the ITS equipment cabinet in accordance with the manufacturer's

recommendations.

The Contractor must electrically bond the camera assembly and the pole mounted adapter to the pole or sign structure. The camera assembly must be connected to the pole mounting adapter through a No. 6 AWG braided grounding conductor.

The SPD (surge protectors) must be individually grounded in accordance with the manufacturer's recommendations using 35 mm SST DIN rail bonded to an identified copper ground bus bar supplied in the ITS cabinet.

The Ethernet data output from the IP PTZ HDTV Dome Cameras must be each connected to the Ethernet Switch, furnished as part of the ITS Signal cabinet item.

WARRANTIES AND GUARANTEES:

The Contractor must provide warranties and guarantees in accordance with the Standard Specifications for the project. The IP PTZ HDTV Dome cameras must be furnished with a separate Manufacturer's Three (3) year warranty, effective the date of Acceptance of the Camera installation by the Engineer. The Contractor must provide information on the Manufacturer's Warranty coverage for each IP Dome Camera at the project closeout.

Cable Tags:

Furnish and install approved 2" wide, 304 stainless steel, engraved cable tags with the conductor/cable identification data permanently engraved thereon, so that all cables may be traced from enclosure to enclosure. Install a tag on each cable end within 12 inches on all sides

of every enclosure. Tags must machine engraved, equal to Panduit Type PLM markers.

304 SST engraved permanent tags must be attached to each camera cable end using (2) SST cable ties to fasten the tags to the cable. The Contractor must submit a label nameplate (NP) sample, proposed engraving text and cable identification schedule with identification procedure, to the Engineer for approval prior to installation of any camera l cables. Each cable tag must be uniquely identified as to NYCDOT Video / Camera channel ID and unique cable identification.

SUBMITTAL REQUIREMENTS:

The Contractor must prepare and submit for review, within 120 working days after the Notice to Proceed, the following submittals, including, but not limited to:

1. Provide complete Bill of Material (BOM) including technical data-catalog information, Manufacturers and part number information for all equipment and components is to be supplied under this contract.
2. Provide a schedule of all hardware, control and communications devices which must list each device by its designation tag, as shown on the schematic wiring diagrams and schedule must state for each device; its function, ratings, catalog number, and installation locations. Show intended and As Built IP addresses for each Static IP device. IP addresses required must match and integrate with the NYCDOT TMC IP Schema.
3. Provide a complete block diagram showing all high-level network and communication components and their interconnections.
4. Provide IP PTZ Camera System-Input / Output (I/O) wiring diagrams and schematics.
5. Provide complete schematics and Inter-Connection Wiring Diagrams (IWD) for all hardware, control & communications equipment and other related devices, furnished under this contract.
6. Detailed drawings showing the construction of ITS cabinets, panel equipment locations, active equipment, patch panels, wiring diagrams, conduit entries, brackets, racks, fans, thermostat, ground equipment, rack mounts, power devices, etc.
7. Provide Point to point wiring diagrams showing all wiring and conduits entering and exiting all contract equipment. Include wiring and inter-connections to other field devices supplied by the contractor or by others. Wiring diagrams must include wire sizes (AWG), insulation systems and type.
8. All layout and shop drawings must be drawn in AutoCAD format, in accordance with the General Requirements of the project. Drawings must be drawn to scale, shown ion both plan and section views (2D). Plans and shop drawings must include details, where required to show the intended installation information.
9. Detailed commissioning and test plan submissions must be provided; FOV, Camera Mount and Aiming angles, functional performance tests, site pre-functional acceptance tests (PFAT) and Site Acceptance Tests, include test plans for: NTCIP, Standalone SAT, Group SAT, IST, sub-system and integrated interoperability testing (IST).

QUALITY CONTROL / QUALITY ASSURANCE (QA/QC):

Testing Requirements:
On Site Compliance Testing (NTCIP)

The purpose of these tests is to verify the operation of each IP PTZ HDTV Dome Camera Assembly, using the NTCIP specific communications protocols.

(a.) The contractor must prepare a test script that must be provided to the Engineer for review, as part of the above project submittal requirements. The NTCIP tests must demonstrated all required functionality of the IP PTZ Dome camera assembly and demonstrate that the appropriate requests and responses are transmitted and received by the IP Camera Assemblies and the NYCDOT's camera control software.

(b.) Where a range of acceptable values is specified in the NTCIP conformance tables annexed to the project documents, the Contractor must submit the actual values for each test criteria for review, as part of the test plan submittal requirements.

(c.) Failure to satisfactorily complete these compliance tests, configured for the actual cameras, feature sets and this project must be cause for immediate rejection of the proposed IP PTZ Camera equipment.

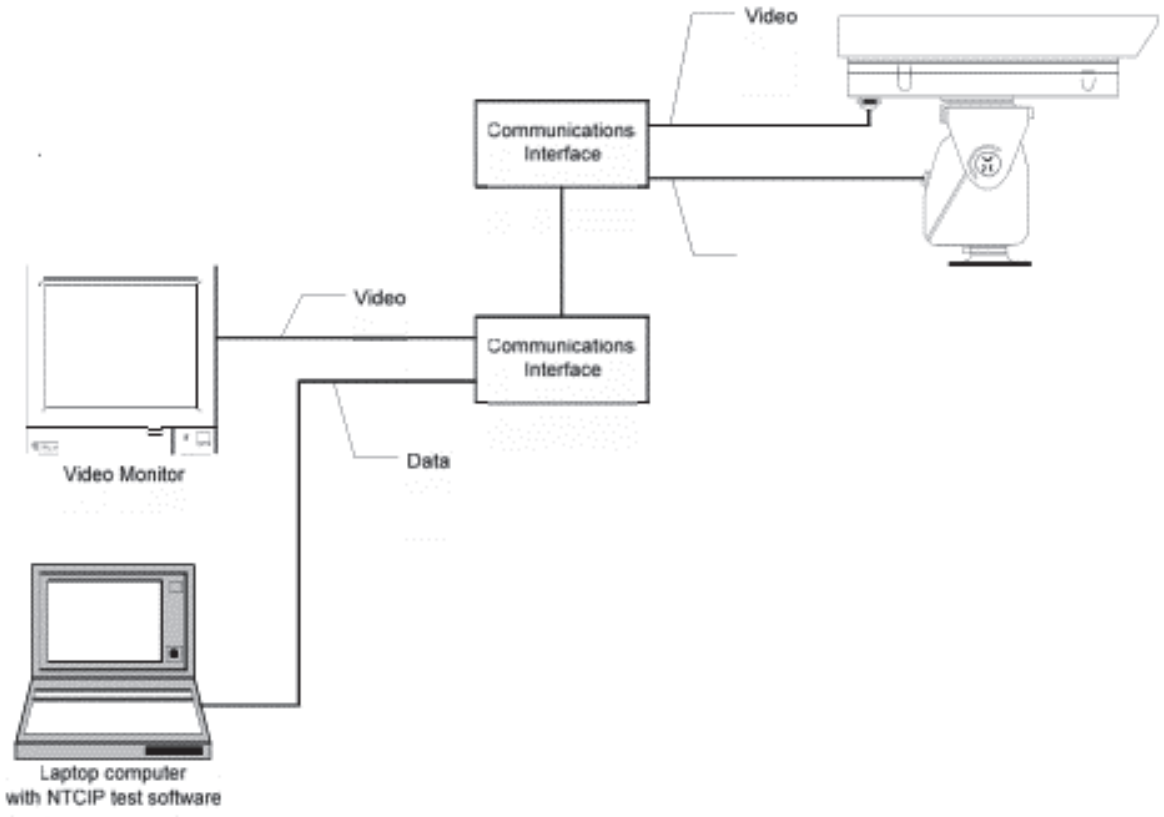

Figure 1-1 Test Environment for ip Camera Assembly

NTCIP TEST CASES

1. TC-004 IP PTZ CAMERA – PRESETS

Test Case:	*Title:*	**Camera Presets**

TC004	□ □□□r□□□□□□□□ □ □ □□□□□□□□□□ □r□□r□□□□	□□□□□r□□□□□□□□□□

□□□□	**Set** *PositionPan.0* □□□□ M□d□□□□□□□□□□□□□□□□□□□□ □□□□d□□0□□□ □□□□□□□□□□r□□□□□□□□□□□□000□ □□□□□ □□□□□□□□□□□□r□□□□□□ □□□□□□□r□□□□□□□□0□□00□46□□0□	□□□□□□□□□□□□□□
□□□□	□ □□□□□□□□r□□□ □□□□□□□□□□□□d□□□	□□□□□□□□□□□□□□
□□□□	**Set** *PositionTilt.0* □□□□ M□d□□□□□□□□□□□□□□□□□□□□ □□□□d□□0□□□ □□□□□□□□□□r□□□□□□□□□□□□000□ □□□□□ □□□□□□□□□□□□r□□□□□□ □□□□□□□r□□□□□□□□0□□00□6□□60□	□□□□□□□□□□□□□□
□4□□	□ □□□□□□□□r□□□ □□□□□□□□□□□□d□□□	□□□□□□□□□□□□□□
□□□□	**Set** *PositionZoomLens.0* □□□□ M□d□□□□□□□□□□□□□□□□□□□□ □□□□d□□0□□□ □□□□□□□□□□r□□□□□□□□□□□□000□ □□□□□ □□□□□□□□□□□□r□□□□□□ □□□□□□□r□□□□□□□□0□□00□□□□00□	□□□□□□□□□□□□□□
□6□□	□ □□□□□□□□r□□□ □□□□□□□□□□□□d□□□	□□□□□□□□□□□□□□
□□□□	**Set** *presetStorePostion.0* □□□□ □□□□□□□□□□r□□□□ □□□□□□r□□r□□r□r□□ □□□□□□□□	□□□□□□□□□□□□□□
□□□□	□□□□rd□□□□ □r□□□□□□□□□□	□□□□□□□□□□□□□□
□□□□	**Get** *presetStorePostion.0*	□□□□□□□□□□□□□□
□0□□	**Verify** □□□□□□□□□**Response Value** □□□□□□□□□□□	□□□□□□□□□□□□□□
□□□□	**Set** *presetGotoPostion.0* □□□□	□□□□□□□□□□□□□□
□□□□	□ □□□□□□□□r□□□□□6□□□□□□□d□	□□□□□□□□□□□□□□
□□□□	**Verify** □□□□□□□□□□□□□ □r□□□□□□□□□□□□□ □□□□□□□□r□□□rd□d□□□□□□□□□□	□□□□□□□□□□□□□□
□4□□	**Get** *presetGotoPostion.0*	□□□□□□□□□□□□□□

□□□□	**Verify** □□□□□□□□□□**Response Value** □□□□□□□□	□□□□□□□□□□□□□□
□6□□	**Get** *presetPositionQuery.0*	□□□□□□□□□□□□□□
□□□□	**Verify** □□□□□□□□□□**Response Value** □□□□□□□□	□□□□□□□□□□□□□□
□□□□	**Set** *presetGotoPostion.0* □□□□□□ □□r□□□□□r□□	□□□□□□□□□□□□□□
□□□□	□□□□□□□□□r□□□□□□6□□□□□□□□d□	□□□□□□□□□□□□□□
□0□□	**Verify** □□□□□□□□□□□□□□□r□□□□□□□□□□□□□□□□□□□

4	**Set** *PositionZoomLens.0*	
	M d	
	d 0	
	r 0000	
	r r 0 00 0	
4	r d	
44	**Verify** r	
4	**Get** *presetPositionQuery.0*	
46	**Verify** **Response Value** 0	
4	**Set** *PositionPan.0*	
	M d	
	d 0	
	r 0	
	r r 0 00 00 00	
4	r d	
4	**Set** *PositionTilt.0*	
	M d	
	d 0	
	r 0	
	r r 0 00 00 00	
0	r d	
51.	*Set PositionZoomLens.0 to* *Mode: 2 (absolute),* *Speed: 0,* *Position or offset: 0* *The Hex value for this configuration is 02 00 00 00*	*Pass / Fail*
Test Case Result:		

Test Case Notes:		□

2. TC-005 IP PTZ CAMERA – RELIABILITY

| *Test Case:* ***TC004*** | ***Title:*** □□□r□□□□□□□□
□
□□□□□□□□□□
□r□□r□□□□ | **Camera Presets**
□□□□□□r□□□□□□□□□□□□□□□□□□□□r□□□□□□□□
r□□□□□□□□□□□□□□□□□□□

	Set *presetStorePostion.0*	
0	**Set** *presetGotoPostion.0*	
	Verify	
	Get *presetGotoPostion.0*	
4	**Verify** **Response Value**	
6		
	Verify	
Test Case Notes:		

On Site Testing – IP PTZ HDTV Dome Camera Operations Tests - Stand Alone

The purpose of this test is to verify the operation of all installed equipment between the ITS equipment cabinet and the end Camera devices, including all electrical,

grounds, and IP data connections.

(a.) Pre-requisites for the IP PTZ HDTV Dome Camera Stand Alone Operations test are as follows:

- Satisfactory completion of NTCIP compliance testing;
- Satisfactory completion of sub-system specific staging tests, with complete resolution of any issues documented during these tests;
- Permanent installation of all IP PTZ Dome Camera equipment into the ITS cabinet for each site under test.
- Permanent connection of electrical power to the local ITS equipment cabinet for each site under test. Portable generator supplied electric power must not be acceptable.

(b.) This test must demonstrate the following:

Local control of all camera and pan-tilt-zoom unit functions;

IP Video output from the IP Camera

Operation of the local camera using manufacturer's control software or hand held PZ camera controller
The Contractor must test each IP PTZ Dome Camera and all interconnections to ensure that the Cameras and data cables have not been damaged during installation.

On Site Testing – IP Dome Camera Operation - Group Site Acceptance Tests (SAT):
The purpose of this test is to verify the operation of all installed equipment from an aggregation point, e.g. an ITS hub cabinet, to each end device, including related equipment installed in local ITS equipment cabinets.

(a.) Pre-requisites for the IP PTZ Dome Camera Operation Group Tests are as follows:

- Satisfactory completion of the operational stand-alone test for each end device connected to the aggregation point, with complete resolution of any issues documented during these tests;
- Permanent installation of all equipment into the ITS equipment cabinets, ready on all aspects for the aggregation of each site under test;
- Permanent connection to the DOT ITS communications network at each end device and at the aggregation locations, including all test documentation required for acceptance of the installed IP Camera network;
- Permanent connection of electrical power to the ITS equipment cabinets for the aggregation site under test.

(b.) The Camera Operation Group Acceptance Tests must demonstrate the following:

- Operation of the IP communications network and any required modems, protocol converters, multiplexers, switches or any other communications interface between end devices and the aggregation point(s);
- Remote control of each IP camera and pan-tilt-zoom unit functions at each IP Camera, operated over the installed IP communications network;
- Satisfactory video output from each IP Camera operating over the installed ITS communications network;

- Operation of each IP camera using camera manufacturer's control software or a compatible video / PTZ controller, operated over the installed IP communications network.

IP PTZ HDTV Dome Camera Sub-System - Integration Tests (IST):

The purpose of these tests are to verify the operation of all installed IP Video equipment between the Joint Traffic Management Center (JTMC) facility and IP PTZ HDTV Dome Camera systems deployed in the field, including all existing & operational DOT equipment installed in intermediate locations and in local ITS equipment cabinets.

(a.) Pre-requisites for this test are as follows:

- Satisfactory completion of the group site acceptance test for each aggregation point, with complete resolution of any issues identified or documented during these tests;
- Permanent installation and programming of all IP PTZ Dome Camera sub-system equipment, furnished by the NYCDOT into the JTMC facility under test;
- Permanent connection to the ITS communications network at the JTMC facility, any aggregation points, and each ITS end device;
- All test documentation required for acceptance of the installed network;
- Permanent connections of electrical power to the equipment under test;

IP PTZ HDTV Dome Camera Integration (IST) tests must demonstrate the following:

- Operation of the ITS communications network and any required modems, protocol converters, multiplexers, switches or any other communications interfaces between IP Dome Camera end devices and the JTMC facility.
- Remote control of all camera and pan-tilt unit functions at each
- IP Cameras, operated and controlled over the installed ITS communications network;
- Video output from the IP PTZ Dome Cameras, over the installed ITS communications network;
- RTMC End to End Operation of the IP Camera control software or controller over the installed NYCDOT fiber communications network.

System Acceptance Tests – Final:

The purpose of this test is to ensure interoperability of all sub-systems from central to the end device, including all parts in between; detailed requirements for the system acceptance test may be provided in the Special Notes.

At the completion and acceptance of these tests, the NYC Department of Transportation must have beneficial use of the IP PTZ Dome Camera equipment, the IP PTZ Dome Camera system will begin the operational use, acceptance and warranty periods.

MEASUREMENT & PAYMENT:

METHOD OF MEASUREMENT:

This work will be measured as the number of IP PTZ HDTV Dome Camera Assemblies satisfactorily furnished, installed, tested, and made fully operational in accordance with the plans, specifications and directions of the Engineer and the NYCDOT.

The unit price bid must include the cost of furnishing all labor, materials, testing and equipment necessary to satisfactorily complete the work.

BASIS OF PAYMENT

The Unit price bid must also include the cost of all required labor, materials, equipment, commissioning and testing and incidental expenses required to furnish, install, integrate, align and demonstrate each IP PTZ HDTV Dome Camera System.

Payment for the ITS Signal cabinets, conduit, data and power wiring must be included under separate contract items.

Payment will be as follows for each IP PTZ HDTV Dome Camera System:

1. Twenty – Five percent (25%) of the bid price for each IP PTZ HDTV Dome Camera System will be paid when the Contractor certifies the equipment is ready for delivery and installation at the Project. (After Submissions, Shop Drawings, Test Plans, Equipment Delivery)
2. Twenty – Five percent (25%) of the bid price for each IP PTZ HDTV Dome Camera System will be paid when the IP Dome Camera equipment has been installed and approved at the Project site. (After equipment installation and wiring within the ITS signal cabinets and on the sign/pole structures, including NTCIP and Camera Operations- Stand Alone tests).
3. Twenty – Five percent (25%) of the bid price for each IP PTZ HDTV Dome Camera System will be paid when the IP PTZ Dome Camera equipment has been approved at the completion of Group Camera Acceptance Testing (SAT) And the IP PTZ HDTV Dome Camera Integrated Systems Testing (IST) are accepted by the NYCDOT. Fifteen percent (15%) of the bid price for each IP PTZ HDTV Dome Camera System will be paid when the IP PTZ HDTV Dome Camera equipment has been approved at the completion of Final System Acceptance testing
4. Ten percent (10%) of the bid price for will be paid when the contractor submits Record Drawings, Maintenance & Operations Manuals, Provides training on the IP PTZ Dome Camera operations to the NYCDOT and once the NYCDOT has beneficial use of the IP PTZ Dome Camera equipment (each system begins the operational use, acceptance, guarantee and warranty period).

Item No.	**Item**	**Pay Unit**
PK-ESCR-450	IP PTZ HDTV DOME CAMERA AND MOUNTING ASSEMBLY	EACH

END OF SECTION

SECTION PK-ESCR 451– VEHICLE TRANSMIT TAG READER OSS-1 JACKSON AV

SECTION PK-ESCR 452 – VEHICLE TRANSMIT TAG ANTENNA OSS-1 JACKSON AV

SECTION PK-ESCR 453 – VEHICLE TRANSMIT TAG READER OSS-8N FDR NORTH

SECTION PK-ESCR 454 – VEHICLE TRANSMIT TAG ANTENNA OSS-8N FDR NORTH

SECTION PK-ESCR 455 – VEHICLE TRANSMIT TAG READER OSS-8S FDR SOUTH

SECTION PK-ESCR 456 – VEHICLE TRANSMIT TAG ANTENNA OSS-8S FDR SOUTH

GENERAL:

Under this item, the contractor shall furnish and install new RFID based TRANSMIT Tag Readers and TRANSMIT RFID Antennas in accordance with these Contract Documents and the requirements of the NYCDOT Traffic Management Center (TMC).

The work shall include, but is not limited to furnishing, installation and acceptance testing of active equipment, antennas, cables, conduit and boxes including cleaning of the conduits, splices, terminations and final connections on line and load sides of existing ITS installations,

Install all newly supplied equipment, as specified under this contract and coordination with incidental equipment as supplied by others.

All work shall be done in compliance with the latest published edition of NFPA 70 National Electrical Code (NEC) including the NYC Electric Code amendments to the NEC.

MATERIALS:

TRANSMIT TAG READER SYSTEM

Under this item the Contractor shall furnish TRANSMIT Tag Readers (Multiprotocol RFID field processors) and TRANSMIT Antennas with associated power supplies, software, mounts, miscellaneous coaxial RF cables, Surge Protectors along with mounting antenna mounting hardware and incidentals required at each RFID location, as indicated in the Contract drawings.

Equipment cabinets, mounting pads for the TRANSMIT Tag Reader enclosures, ITS communications equipment, and data communications cables will be furnished and installed under other related ITS contract payment items for this contract.

NYC DOT RTMC TRANSMIT RFID Central Traffic Management and Server Equipment will be provided by the City.

To assure compatibility with the existing TRANSMIT RFID system; the equipment shall be as follows:

TRANSMIT Tag Readers

The RFID TRANSMIT Tag Readers shall meet the following requirements:

Protocol:	For interrogation of RFID tags - Interagency Group (IAG). The Engineer will furnish FHWA standards-based protocols for communication between the RTMC Operations Center and the TRANSMIT tag readers.
Reading Speed:	Up to eight (8) lanes of traffic with vehicles traveling at 100 mph.
Data Interface:	Ethernet (TCP/IP)
FCC Licensing:	Contractor (integrator) shall be responsible for obtaining and paying for all licenses required to test and operate the TRANSMIT system, license by the Federal Communications Commission (FCC)., The FCC license shall be in the name of: New York State Department of Transportation or the New York City Department of Transportation (DOT). FCC Part 15 Class A License holder is required to test. Use FCC Form 601 to apply. FCC License application takes 4-6 months to process, coordinate submission with existing NYS/NYC FCC applications. System operates @ 902-928 MHz band, RF Output is > 3 milliwatt Refer to FCC Section 90.351 for permitted uses.
Distance from Antenna:	RFID Reader System shall operate reliably up to 300 ft. from the TRANSMIT Antenna
Electrical Requirements:	115 VAC, 265 Watt
RF Modules:	Provide One (1) RF transceiver module for each TRANSMIT antenna panel specified in the Contract Documents. The Modules shall be compatible with the TRANSMIT Antennas, as installed. Provide SMA x N(F) whip RF cables for connection to protected side of each SPD. Provide One (1) spare RF module, ship loose for NYC DOT Spare use.
Mechanical Requirements:	• Configured for mounting within NEMA 3R ITS Cabinet with EIA-19” rack chassis, See ITS Cabinet specification. • Maximum dimensions: 21 in (H) x 19 in (W) x 13 in (D) • Blank plates shall cover unused RF module slots • Rack Mount Power Supply
Environmental Requirements:	• Operating Temperature: -30°F to +165°F • Humidity: 5% to 95%, non-condensing • Meets NEMA TS-1 with enclosure cooling fan
Multi-Protocol Compatibility	• TDM – EZ-Pass Consortium • ISO 18000-62 (6B) • ISO 18000-63 (6C) • ATA ISO 10374
Reader Model	JANUS® Multiprotocol Reader II (MPR 2.3)

TRANSMIT Tag Antenna

The TRANSMIT Tag Antenna shall adjustable and suitable for overhead structural mounting and shall meet the following requirements:

Electrical - RF	• Frequency Range: 902 MHz to 930 Mhz. • Gain: 9.5 ±1 dB. • VSWR: 1.3:1 maximum from 902-928 MHz. • Impedance: 50 ohms. • Beam width - horizontal: 60±5degrees. • Beam width - vertical: 40±5 degrees. • Polarization: horizontal. • Cross polarization: less than 15 dB. • Side Lobe Suppression: less than 17 dB
Mechanical	• Dimensions: 17.25” (H) x 11” (W) x 2” (D) maximum. • Weight: 6 lbs. maximum. • Rated Wind Velocity: 125 mph. • Moment at 100 mph: 3.5 lbf (compliance depends on mounting structure). • Reflector Material: Aluminum.
Antenna Connector:	Type N (F) coaxial connectors shall be used to attach the RF coaxial cable to the antenna
Antenna Mounts:	Astro-Brac Articulated SST Band Mount # AS-3029-29-SS-PNC
Antenna Type	Parabolic Directional, 2 Patch, Vertical Orientation
Antenna Coverage	60º Horizontal 40º Vertical 05º Tilt Angle
Gain	10 dB
Antenna Model	Kapsch EZ-Pass 800260-010 Adjustable mount

TRANSMIT Tag Antenna - coaxial cable

TRANSMIT Tag Antenna item appropriate coaxial cables shall be furnished and installed to connect each RFID lane antenna to the TRANSIT Tag Reader RF modules, located in the ITS signal enclosure. The coax cable shall meet the following general requirements:

RF Coax Connector TRANSIT Antenna End	RG-8 Type N (M) Connector. Matched to Antenna Connector
RF Coax Connector TRANSIT RF Module End	Type N (M) Connector, silver plated body, plated pin, Matched to SPD connector type
Coax Cable Characteristic impedance:	50 ohms
Coaxial Cable Type	Outdoor, Watertight, Flexible Low Loss Communications Coax, RG-8 Type: LMR-400-DB Times Microwave Systems or Engineer approved equivalent

Surge Protectors:

Surge protection devices (SPD) shall be provided in the TRANSMIT equipment cabinet for each TRANSMIT antenna.

SPD Model: Provide Waterproof (IP 67 rated), bulkhead mount, SPD, model DSXL-NS with model BFN ground angle mount, as manufactured by PolyPhaser Corp, or approved equal.

The surge protectors shall be in accordance with the TRANSMIT Tag Reader RF Module manufacturer's recommendations.

SPD shall be coaxial connected, N/SMA on protected side, N(F) connected on antenna side.

Ratings: 700 MHz to 2.7 GHz, 300-Watt RMS, 18 kA rated.

Manufacturers:

The RFID TRANSMIT reader equipment must be completely integrated with and compatible with the existing NYS / NYC Department of Transportation Regional Traffic Monitoring Center equipment, ITS communications and infrastructure.

Approved Transit Tag system manufacturer/ integrators must be:

Kapsch TrafficCom North America
8201 Greensboro Drive
McLean VA 22101
1-845-220-7802

Or

Transcore.Com
150 4th Avenue North, Suite 1200
Nashville, TN 37219,
1-615-988-8960

No alternates will be approved.

CONSTRUCTION DETAILS:

The Contractor shall install the TRANSMIT Tag Reader rack into the ITS cabinet and as designated in the Contract Documents. ITS Equipment Cabinet mounting shall be as shown in the Contract Documents.

The Contractor shall connect the TRANSMIT Tag Reader RF modules to the TRANSMIT antenna lead-in coaxial cables via the individual surge protector devices (SPDs) and connect the TRANSMIT Tag Reader rack Power Supply to the 120 VAC power bus in the ITS cabinet. The surge protectors shall be individually grounded in accordance with the manufacturer's recommendations to an identified copper ground bus bar supplied in the ITS cabinet.

The Ethernet output from the TRANSMIT Tag Readers shall be connected to the ethernet switch, furnished as part of the ITS Signal cabinet item.

The TRANSMIT RF Antenna coaxial cables shall be continuous from TRANSMIT antenna up to the surge protectors (SPD), located in the ITS Cabinet, without any intermediate splices or connectors.

RF coaxial cable slack of 12" shall be left at the TRANSIT antenna location and slack of 12" shall also be left at the ITS cabinet, for each coaxial cable.

CABLE TAGS:

Furnish and install approved 2" wide, 304 stainless steel, engraved cable tags with the conductor/cable identification data permanently engraved thereon, so that all cables may be traced from enclosure to enclosure. Install a tag on each end within 12 inches on all sides of every enclosure. Tags shall be machine engraved, equal to Panduit type PLM markers.

304 SST engraved permanent tags shall be attached to each coaxial cable end using (2) SST cable ties to fasten the tags to the cable. The Contractor must submit a label nameplate (NP) sample, proposed engraving text and cable identification schedule with identification procedure, to the Engineer for approval prior to installation of any coaxial cables, TRANSMIT Antenna or TRANSMIT RF reader modules. Each cable tag shall be uniquely identified as to antenna / RF channel and unique cable identification.

SUBMITTAL REQUIREMENTS:

The Contractor shall prepare and submit for review, within 120 working days after the Notice to Proceed, the following submittals, including, but not limited to:

1. Provide complete Bill of Material (BOM) including technical data-catalog information, Manufacturers and part number information for all equipment and components is to be supplied under this contract.

2. Provide a schedule of all hardware, radio, control and communications devices which must list each device by its designation tag, as shown on the schematic wiring diagrams and schedule must state for each device; its function, ratings, catalog number, and installation locations.

3. A complete block diagram showing all high-level network and communication components and their interconnections.

4. Reader System-Input / Output (I/O) wiring diagrams and schematics.

5. Complete schematics and Inter Connection Wiring Diagrams (IWD) for all hardware, control & communications equipment and other related devices, furnished under this contract.

6. Detailed drawings showing the construction of ITS cabinets, panel equipment locations, wiring diagrams, conduit entries, brackets, racks, fans, thermostat, etc.

7. Point to point wiring diagrams showing all wiring and conduits entering and exiting all contract equipment. Include wiring and inter-connections to other field devices supplied by the contractor or by others. Wiring diagrams shall include wire sizes (AWG), insulation systems and type.

8. Provide complete descriptions, frequencies, output and operational data for all RF and communications equipment.

9. Provide submissions for FAT and SAT testing plans.

10. Provide a sample of the FCC Radio operating license application for review.

QUALITY CONTROL / QUALITY ASSURANCE (QA/QC):

All apparatus, components and equipment comprising the RFID TRANSMIT vehicle reader system, including, but not limited to, NEMA 3R traffic enclosure-pole mount, TRANSMIT reader rack mount chassis, TRANSMIT reader RF modules, TRANSMIT reader rack backplane with power supplies, RF coax cables, connectors, surge protective devices, TRANSMIT parabolic

antennas, antenna adjustable mounts, etc. must be manufactured, configured, assembled and acceptance tested by a single, NYC DOT qualified system integrator.

The vehicle reader system integrator must assume complete system responsibility for the pre-fabrication layout, programming, assembly, acceptance testing and integrated system functioning of all components. The assembled systems must provide satisfactory performance in local operation and must then be carefully integrated into the existing Regional Traffic Monitoring Center (RTMC) operations.

The vehicle reader system integrator must be responsible to survey the intended antenna placements, aiming angles and provide detailed layout and coverage schematics for the TRANSMIT RF readers and TRANSMIT antenna mounting systems.

The system manufacturer shall submit an acceptable plan for source/fabrication quality control, along with a written plan of software, programming, testing and acceptances.

Testing Requirements:

Factory Acceptance Tests (FAT)

The vehicle tag reader system integrator must submit a plan of Factory Acceptance Testing (FAT) to be conducted at the manufacturer's facility, located within the contagious United States. Qualified representatives of the manufacturer of the TRANSMIT RF equipment shall conduct full acceptance tests and operational demonstrations of each system, before the system is shipped to the site.

FAT tests shall demonstrate, to the satisfaction of the Engineer, that the reader equipment and transponder configuration is tested, acceptable and ready in all aspects. All components, interconnected devices, communication and control devices, etc. must be installed, programmed, connected and operate in accordance with the approved plans, specifications, layout shop drawings and approved schematics as part of the FAT acceptance of each system.

The FAT test shall be attended by the Manufacturer, the System Integrator and the installing Contractor. The Engineer may witness the FAT tests.

Site Acceptance Tests (SAT)

Reader / Antenna

The Contractor must test each reader / antenna and all interconnections to ensure that the readers, antenna and coaxial cables have not been damaged during installation.

Prior to connecting the readers antenna and coaxial cables, installed at each site, the Contractor shall conduct a Pre-Functional Acceptance Test (PFT) of each item separately.

The Contractor, in coordination with the reader antenna system integrator, must submit a detailed plan of Site Acceptance Testing (SAT) for approval.

The following on-site tests must be performed:

Coaxial Cable – On Arrival, each reel of RF coaxial cable must be carefully handled and inspected by the Contractor, on arrival to the site to ensure coax cable RF integrity and no physical damage.

- A DC resistance, a 500 vdc megger test and a TDR "sweep" test shall be performed, on each reel at arrival to the site.
- SWEEP TESTS: Each RF coaxial cable (on reel) must be frequency swept, from 850 to 950 Mhz.

- Submit a written record of each cable's on reel inspection and test results to the Engineer.

Prior To Install - TRANSMIT Antenna

- The Contractor must physically inspect each antenna for no physical damage.
- Perform a VSWR test on the antenna units, prior to mounting and measure the antenna's impedance.

After installation - TRANSMIT antenna and coaxial cables

The Contractor must perform a physical inspection of each item to verify that it has not been damaged during installation.

- Perform a TDR coax acceptance test, a DC resistance (ohm) test and DC megger test on each installed coaxial cable assembly and other tests as recommended by the cable / antenna manufacturer.
- Perform an impedance measurement on each antenna once installed in the field.
- Sweep tests - After connection of the RF coaxial cable to the TRANSMIT antenna and all connectors, the Contractor must conduct a calibrated frequency sweep (850 to 950 MHz performance) and TDR cable performance baseline tests from the ITS cabinet to each antenna location.
- Submit a written record of each coaxial cable and antenna in place test results to the Engineer. The RFID reader manufacturer must review and approve of all site testing and validations of the field work. Test records must be submitted at least (30) days prior to the date of first low power energization of the radio transponders.

Site Operational Tests (SOT)

The Contractor must perform complete Site Operational Tests – local, for each TRANSMIT site, after the antenna(s) have been connected and are acceptance tested back to the tag reader RF modules.

The Contractor must verify that vehicles with RFID tags are correctly interrogated by the tag readers.
Ninety-five percent (95%) of all tagged vehicles passing within each antenna's field must be correctly interrogated.

This Site Operational Test of each individual lane and the aggregated data output for each site, must be performed locally from the ITS reader cabinet.

After satisfactory testing of the Site Operational Tests - local, the Contractor must also remotely conduct a comprehensive end-to end Site Acceptance and Connectivity Test (SAT) in cooperation with the RTMC operations center and the NYC DOT Signals Department.

All support personnel, test instruments and equipment necessary to perform the testing and site acceptances must be provided by the Contractor.

The integration of each TRANSMIT site into the RTMC TRANSMIT system software will be performed under other contract items or by others, as directed by the Reginal TMC Director. The Contractor and the Equipment Manufacturer must provide on-site technical and operational support during the Site Acceptance Tests, including the Site Operational Tests – Remote. The TRANSMIT Tag reader manufacturer's service representative must directly supervise and attend the onsite testing and commissioning of each reader antenna system, in order to support the Contractor's start-up and to validate the operational readiness of the system.

The manufacturer shall provide the on-site supervision of each of the RF antenna and transmitter installations, using an FCC licensed radio operator to conduct pre-energization testing, antenna pattern alignments and full RF power testing, required for FCC license approval.

MEASUREMENT & PAYMENT:

The Vehicle TRANSMIT Reader System work is to be paid for under each of the below listed payment items, which must be installed in accordance with the plans, specifications and directions of the Engineer.

BASIS OF PAYMENT

The Lump Sum price bid shall include the cost of all required labor, materials, equipment, commissioning and testing and incidental expenses required to furnish, install, integrate, RF test, align and demonstrate the TRANSMIT Reader System.

Payment for the ITS Signal cabinets, conduit and power wiring shall be included under separate contract items.

Payment for the RF coaxial cables, antenna mounts and components used to connect the TRANSMIT antennas to the TRANSMIT RF tag readers will be included under TRANSMIT antenna item.

Payment will be as follows for the TRANSMIT Tag Readers

1. Twenty percent (20%) of the bid price for the TRANSMIT Tag Readers will be paid when the Manufacturer certifies the equipment is ready for delivery to the Project. (After Submissions, Fabrication, Programming and FAT Acceptances by the Engineer.)
2. Twenty percent (20%) of the bid price for the TRANSMIT Tag Readers will be paid when the equipment is installed and wired within the ITS signal cabinets on the sign structures.
3. Twenty percent (20%) of the bid price for the TRANSMIT Tag Readers will be paid when the equipment is energized and has been approved, after the Site Acceptance-Local operation test.
4. Twenty percent (20%) of the bid price for the TRANSMIT Tag Readers will be paid when the equipment is has been approved, after the Remote (end-to-end) Operations test.
5. Ten percent (10%) of the bid price for the TRANSMIT Tag Readers will be paid when the contractor submits Record Drawings, Maintenance & Operations Manuals and FCC Radio licenses.
6. Ten percent (10%) of the bid price for the TRANSMIT Tag Readers will be paid when the Engineer has accepted each site for Final System Acceptances.

Payment will be as follows for the TRANSMIT Antenna Systems:

1. Twenty percent (20%) of the bid price for the TRANSMIT Antenna will be paid when the Manufacturer certifies the Contractor's installation, Sweep and integrity testing of the RF Coaxial cables and Antennas.
2. Twenty percent (20%) of the bid price for the TRANSMIT Antenna will be paid when the Antenna Surge Protection and coax systems are installed within the ITS signal cabinets.
3. Twenty percent (20%) of the bid price for the TRANSMIT Antenna will be paid when the equipment is energized and has been approved, after the Site Acceptance-Local operation test. This includes the in-place Antenna alignment & Sweep tests.

4. Twenty percent (20%) of the bid price for the TRANSMIT Antenna will be paid when the equipment is energized and has been approved, after the Remote (end-to-end) Operations test.
5. Twenty percent (20%) of the bid price for the TRANSMIT Antenna will be paid when the Engineer has accepted each site for Final System Acceptances.

Item No.	Item	Pay Unit
PK-ESCR-451	VEHICLE TRANSMIT TAG READER, OSS-1 JACKSON AV	LUMP SUM
PK-ESCR-452	VEHICLE TRANSMIT ANTENNA, OSS-1 JACKSON AV	LUMP SUM
PK-ESCR-453	VEHICLE TRANSMIT TAG READER, OSS-8N FDR NORTH	LUMP SUM
PK-ESCR-454	VEHICLE TRANSMIT ANTENNA, OSS-8N FDR NORTH	LUMP SUM
PK-ESCR-455	VEHICLE TRANSMIT TAG READER, OSS-8S FDR SOUTH	LUMP SUM
PK-ESCR-456	VEHICLE TRANSMIT ANTENNA, OSS-8S FDR SOUTH	LUMP SUM

END OF SECTION

SECTION PK-ESCR 461 – NEMA 3R ITS SIGNAL CABINETS, TYPE P44

SECTION PK-ESCR 462 – NEMA 3R ITS SIGNAL CABINETS, TYPE 344

SECTION PK-ESCR 463 – NEMA 3R ITS SIGNAL CABINETS, TYPE ATSC-12

SECTION PK-ESCR 464 – NEMA 3R ITS SIGNAL CABINETS, TYPE ATSC-8

GENERAL:

Under this item, the contractor must furnish and install new NEMA 3R SIGNAL CABINETS, in accordance with these Contract Documents, as shown in the plans, per the requirements of NYC DOT – Signals and as directed by the Engineer.

The signal cabinets must be NEMA 3R rated enclosures, which must house the ITS signal control equipment necessary to operate VMS sign controllers, TRANSMIT (RFID) Readers, CCTV, RTMS and ITS fiber equipment. The ITS signal control equipment must be provided under these contract items and other sections items in this specification.

The work must include, but is not limited to; furnishing, installation and acceptance testing of active equipment, mounting bases, rack mount Fiber Patch panels, rack mount CAT 6 Patch panels, wire management, labels, wire identification, nameplates, rack mounting hardware and all final connections on line and load sides of ITS cabinet installations.

Install all supplied equipment, as specified under this contract and coordination with any incidental equipment, as supplied by others.

All work must be done in compliance with the latest published edition of NFPA 70 National Electrical Code (NEC) including the NYC Electric Code amendments to the NEC.

DESCRIPTION:

This work must consist of furnishing, installing, testing and commissioning of NEMA 3R ITS SIGNAL CABINETS and cabinet mounts of the types described in this specification, in accordance with the contract documents and as directed by the Engineer.

MATERIALS:

All materials furnished, assembled, fabricated or installed must be new, corrosion resistant and in strict accordance with NY State, NEMA 3R and Underwriters Laboratories (U.L.) specifications. Each of the four (4) cabinet configurations covered by this specification, must be provided complete in all aspects with all the internal components and mounting hardware necessary to provide for the installation and operation of ITS signal's equipment, as noted in the plans and specifications.

General requirements for material, construction, installation, testing, and documentation are presented in this specification. Where material or construction requirements presented in this specification conflict with the proposed model, the manufacturer and installer must provide written documentation describing the conflict and the manufacturer's plan for meeting the requirements of this specification.

All materials furnished, assembled, fabricated or installed must be new, corrosion resistant and in strict accordance with the details shown in the contract documents and this specification. The exterior ITS signal cabinet housings must be fabricated from ⅛ inch minimum thickness, aluminum alloy sheet meeting the requirements in ASTM Specification No. 5052-H32. Each of the ITS signal cabinet tops must be provided with a 1-inch slope to prevent the accumulation of water on its top surface.

The exterior surfaces of each ITS signal cabinet must be factory powder coated, Color to match NYC DOT standard Federal Color Spec. 595B Color: 14062 Medium Green

Mechanical Requirements:

Door and Door Hardware:

Each ITS signal cabinet must have a hinged main door which permits access to all equipment within the cabinet and visual inspection of all indications and controls. The main cabinet door must be double flanged on all four edges to increase strength around the openings and to keep dirt and liquids from entering the enclosure when the doors are open.

The cabinet doors must be constructed of ⅛ inch thick type 5052-H32 aluminum alloy to provide a strong rigid construction. All welds must be neatly formed and free of cracks, blowholes and other irregularities, and all inside and outside edges of the cabinet must be free of burrs.

The door hinges must be a one-piece, continuous piano hinge, with a stainless-steel hinge pin. The hinge must be located on the right side of the door when viewed from the front, unless otherwise indicated. The door hinge and pin must run the entire length of the door. The hinge pin must be capped at the top and bottom by a weld to render it tamper proof.

The doors must be furnished with a gasket that satisfies the physical properties as found in UL 508 table 21.1, including a weather tight seals between the cabinet and doors.

Each door must be equipped with a prop/catch mechanism to automatically hold the door open at least 125 degrees. Each ITS cabinet door must be furnished with Stainless Steel door handles, 3-point latch and fitted with padlock hasp feature.

All doors must be provided with a main cylinder door lock, Corbin No. 15481RS, or equivalent, constructed of stainless steel which must operate with a NYC DOT Signals industry conventional No. 2 key. A stainless-steel lock protector plate must be fitted over the rear of the main door lock cylinder.

The cylinder lock must engage a three-point, roller positive, locking system. The lock cylinder must be located so as not to interfere with movement of the door handle. Two No. 2 keys must be provided with each cabinet for use by NYC DOT Signals personnel.

Gasketing:

The housing must have a door, securely gasketed, which must include substantially the full area of the front of the cabinet. Gasketing must be provided on all door openings and must be of dust-tight permanent type that will not peel off or deteriorate. Door gaskets must be ¼ inch minimum thickness, closed cell neoprene and must be installed with compatible contact cement for a permanent bond. The gasket mating surface must be sprayed or otherwise coated with a silicon lubricant to prevent sticking to the mating metal surface.

The gasket material must not be damaged by normal cabinet cleaning agents and solvents normally used to remove graffiti from the exterior of the cabinet.

Gasket material must be UV resistant:

The design of the door and gasket must be such that the integrity of the gasket material must not be required to ensure that the internal cabinet assemblies are protected from water damage under adverse environmental conditions. Cabinet door assemblies must be designed in such a way that damaged gaskets do not allow water to enter the Signal cabinet. Gasket material must be continuous along the entire top of the cabinet door with no seams or joints in this section.

The Contractor must submit interior layout and factory fabrication shop drawings for each type of ITS cabinet specified for review and approval by NYC DOT Signals personnel and the Engineer.

Shelves:

All NEMA 3R ITS signal cabinets must be supplied with two removable shelves

One shelf of the ITS cabinet must have a rigid pull-out drawer with a lift open top. The pull-out drawer must be capable of supporting a complete set of cabinet wiring drawings, Fiber distribution diagrams, Interconnecting wiring diagrams (IWD), equipment manuals, and a portable laptop computer (laptop not provided as part of contract).

Signals cabinet 19-inch rack mount drawers must have roller drawer glides to allow for easy pulling out and returning to the closed position.

Cabinet Mounting:

The NEMA 3R ITS cabinets will be oriented and mounted as shown in the submitted layout plans or as directed by the Engineer.

For pole-mounted cabinets, all the hardware and labor necessary to mount the ITS cabinet to the pole or sign structures must be provided under this contract item.

For base-mounted cabinets, all the hardware and labor necessary to mount the ITS cabinet base to the concrete footings, including matching frangible anchor bolts, must be provided under this contract item.

Ventilation:

The NEMA 3R ITS cabinets must be equipped with suitable top and bottom Vent fans. The lower section of the cabinet door must be provided with a louvered air entrance, protected by washable, inlet air filters. Louvers must satisfy the NEMA rod entry test for 3R ventilated closures. Removable, inlet air filters must all be supplied with each cabinet for each of the louvered air entrances. The inlet filters must be securely attached to the louvered air inlet openings with Stainless Steel, adjustable slide retainers.

The cabinet exhaust area must be screened with a durable material having a maximum hole diameter of ⅛ inch. Each ITS cabinet will have an active ventilation system that is thermostatically controlled by fans. Cabinets must contain a 200 cubic feet per minute long life exhaust fan, with adjustable thermostatic control.

The lower portion of the front door must have a louver area of sufficient size to permit the free flow of air corresponding to the rated capacity of the associated cabinet fan. The louvers must be sized to satisfy the filtered air inlets and must be provided on all louvers, inlet filter guide angles must be securely bracketed to the door inlets.

The fan(s) and cabinet ventilation louvers must be located with respect to each other to direct the bulk of the air flow throughout the entire cabinet and in particular over the field equipment units as approved by the Engineer. The Fan thermostat must be adjustable to turn on between 90 degrees and 110 degrees Fahrenheit.

Heating:

All ITS cabinets must be provided with a fan forces electric cabinet heater located near the bottom of the cabinet. An adjustable thermostat must be provided to turn the heater on and off and must be set to turn on at 36 ± 5 degrees F and turn off at 52 ±5 degrees F. The cabinet heater must be rated at 250 Watts, 120 VAC.

Lighting:

A 19” LED rack mount lamp must be provided at each door section for the front and back of each ITS cabinet. The lights must be configured to turn on upon each door opening.

Assembly:

The ITS cabinet must have a standard EIA 19-inch adjustable, self-standing rack assembly. The racks must be capable of housing all equipment specified.

Fiber Optic Distribution Panels:

Fiber Optic distribution panels (FOPP) must be provided in each cabinet as specified for the termination and optical continuation of the ITS fiber optic cables, as required. The FOPP rack mount unit must act as an interface between the fiber optic drop cables and the fiber optic patch cables located within the cabinet.

In addition, the FOPP distribution panel must facilitate the reassignment of the FO fibers within and the local testing of the ITS optical fiber cable plant. The FOPP must be configured in connector fields consisting of rack mounted, bulkhead, Single Mode FOC connectors. The FOPP patch fields must contain a sufficient quantity of connectors to accommodate the maximum number of fibers entering the equipment cabinet. Each connector field must consist of up to 12 type ST single mode connectors, paired per row, with the connector fields clearly identified, by engraved markers, sorted by function group (Trunk, Drop, etc.).

The Fiber distribution panel (FOPP) must be designed for mounting in the standard

19-inch rack assembly of the ITS signals cabinet. The FOPP distribution panels must have sufficient room for slack fiber storage and must have multiple rear entrances.

All connections to active Fiber optic transmission and end device equipment within the cabinet must be via this FOPP panel.

Fiber Optic Cable Slack:

ITS Signal cabinets are required to store slack trunk fiber cable per the Contract documents and must be laid out and furnished with sufficient room to neatly coil the FOC trunk thru and drop cables in the base / rear of the cabinet. Cable rack hardware and storage trays must be furnished and installed to hold the FO cables up and off of the concrete ITS Cabinet base.

Fiber Optic Patch Cables:

The ITS cabinets must be equipped with low loss, duplex type, SM fiber optic patch cables to provide internal distribution to all opto-electronic equipment provided and as shown on the approved layout plans. The FOC patch cables must be factory terminated with matching SM connectors, compatible with the specified equipment complement.

The optical characteristics must be compatible with the fiber optic drop cable specified under a separate contract item. Each FOC patch cable must conform to industry published connector and cable specifications. The Contractor must submit a record of certified test performances, from the factory, for each individual patch and drop FOC cable assembly installed.

Cabinet Wiring:

ITS Cabinet wiring must be provided for the equipment complement as specified on the plans. All cabinet wiring where connected to terminal strips, relays, active equipment switches, SPD, Receptacles, work lights, fans, power supplies, etc., must be identified by the use of insulated, heat shrink, machine pre-printed sleeving slipped over each wire before attachment of lugs, connectors or making the connections. The wire markers must carry the legend in plain words with sufficient details and unique conductor identifications so that a translating sheet will not be required.

All field wires must be cut to the proper length before assembly. No wires must be doubled back to or folded over to take up slack. Individual wires must be identified and neatly laced into cables with nylon lacing. Cables must be secured with UV resistant nylon cable clamps.

The grounding conductors for the utility electric service must be carried throughout the cabinet without a break.

All electrical connections in the cabinet must have enough clearance between each terminal and the ITS cabinet enclosure to provide an adequate distance to prevent a leakage path or physical contact under stress. Where these clearance distances cannot be maintained, suitable dielectric barriers must be provided.

All equipment grounding conductors must run directly and independently to the identified enclosure ground bus bar.

The lay of the interconnecting cables between components must be such that when any enclosure door or drawer is closed, it does not press against the cables or force the cables against the various components inside the cabinets.

All wiring containing line voltage (AC) must be routed and bundled separately and/or shielded from all low voltage, i.e. signal, data, RF and control circuits.

All conductors and live terminals or energized parts, which could be hazardous to maintenance personnel, must be covered with suitable finger safe insulating material.

Power Line Surge Protection Device (SPD):

A power line surge protection device must be installed in each cabinet between the load side of the input power circuit breaker and ground. The protector must have a minimum continuous current rating that is adequate for the protected equipment load (and any associated start up current surges) in each cabinet.

The Power Line surge protector must have the following characteristics:

(a) Working Voltage

The unit must be rated for operation on Single Phase AC power lines with a voltage rating of 120/240 volts 3-wire (Isolated Ground)

(b) Surge Voltage

The unit must protect against a surge current of 50 kA per phase. The rated SSCR must be: 25 kA.

Surge protection devices (SPD) must be provided, installed within the ITS equipment cabinet, one SPD for each panelboard. Provide ½" spud type direct mount.

UL 1449 listed, Type 1

Hardware:

All external screws, nuts, and locking washers must be stainless steel; no self-tapping or Tek screws must be used unless specifically approved by the Engineer. All screws, nuts, and locking washers used internally must be of corrosion resistant material, or Stainless Steel to resist corrosion. All material furnished must be new, first quality, and used in accordance with the highest industry practices.

Material:

All parts must be made of corrosion resistant material, such as stainless steel, aluminum, or brass; or must be treated with corrosion resistance such as cadmium plating or Hot Dip galvanizing. All

materials used in construction must be resistant to fungus growth and moisture deterioration. Dissimilar metals apt to corrode through electrolysis under the environmental operating conditions specified must be separated by an inert material.

Panelboard:

Each ITS Signal cabinet shall have a UL Listed surface mounted panelboard, installed by the enclosure fabricator to provide the necessary power to the Signal cabinet components, heater, fans, AC & DC cabinet mounted power supply, work light, service equipment, PDUs and branch circuits as shown on the project documents to power other related ITS auxiliary equipment.

All components of the panelboard shall be front accessible for ease of replacement without removing any other components or equipment. The circuit breaker panelboard must be Factory Installed Main Circuit breaker type.

Adequate space shall be provided for the tightening of all terminals.

The Signal Cabinet panelboards shall be rated as follows:
120/ 240 Volts AC
Single Phase
3 Wire, Plus ground
Main Circuit Breaker: 100 A Frame Type QOM1
Copper Phase, Neutral and Ground bus
22,000 AIC
20 Circuit
UL Listed Service Equipment
Surface Mount

Circuit Breaker(s):

Panelboard, breakers and components must be approved and listed by Underwriter's Laboratories. The breaker operating mechanism must be enclosed, trip free from operating handle on overload, and trip indicating.

Properly rated equipment circuit breaker(s) must be provided for the equipment complement / schedule shown on the plans.

Circuit breakers must be: unaffected by ambient temperature range, relative humidity, applied power, shock, and vibration range as specified in NEMA TS-1.

Circuit Breakers must have a minimum interrupt capacity of: 22,000 amperes.

Branch Circuits, 1 Pole2 Pole, Vms Sub-Panel Feed And Auxiliary Signal Cabinet Feed.

Signals Cabinet - Grounding Bar:

A solid copper ground bus bar kit must be permanently affixed to the inside surface of the ITS Signal cabinet wall.

The point of contact between the ground bus and ITS cabinet wall must be solidly bonded to have less than 1 ohm resistance. The copper ground bus bar must have a minimum of 20 factory punched connector points, each capable of securing at least one #10 conductor.

Equipment branch circuit ground wiring must return to the panelboard ground bar. Secondary, SPD and conduit/raceway bonds and grounding electrode conductors must be grounded to the identified cabinet enclosure ground bus bar.

The cabinet ground bus bar must be bonded to the panelboard (service) or service disconnect ground using # 4 AWG, green insulated, copper conductor.

The utility service disconnect must be grounded to the Panelboard ground.

The Neutral conductor must be equipped with an identified, removable neutral bonding jumper.

Where multiple grounding bus bars are used, they must be bonded to each other with

Insulated, stranded, #6 AWG copper wire, color: Green.

Furnish and install (1) copper Ground bus bar kit, 4 x 20 “

Drill pattern ‘CC’, in each ITS enclosure.

Duplex Receptacle:

Each ITS Signal Cabinet shall be supplied with an enclosed raintight NEMA Type 5-15R duplex receptacle with integral ground fault interrupting (GFCI) circuit as required by the National Electrical Code. The GFCI receptacle shall be protected by a dedicated 120V 20 Amp branch circuit breaker and located so that no electrical hazard exists when used by service personnel.

CONSTRUCTION DETAILS:

Cabinet Mountings:

All ITS cabinets must be either ground mounted on a specified concrete pad base or must be pole (OSS support) mounted at each location, as shown on the project plans.

ITS Cabinets for pole mounting must be furnished with two (2) stainless steel exterior pole mounting brackets and a solid aluminum plate to cover the opening on the bottom of the ITS Signal cabinet base. The cabinet manufacturer must reinforce the cabinet sidewalls/bracket mounting holes with metal plates of adequate size and strength, welded longitudinally across the inside depth of the cabinet.

The pole mounted ITS signal cabinets must provide enough resistance to flexing and must withstand pole type mounting without warping the cabinet, whenever the cabinet doors are opened or closed.

Pole mounted ITS signal cabinet installations must include the drilling and welding of posts or poles, provisions for a 3” or 4” galvanized nipple threaded inlet into the pole / support leg, below each cabinet and provide for the fastening of structural supports, to match the cabinet size provided.

The Contractor must supply all bolts, nuts, straps, malleable Hot Dipped Galvanized steel condulets with screw on covers and gaskets, nipples, lock washers, mounting plates, bushings and other material required to secure the cabinet properly to the pole in accordance with the details shown on the plans.

The ITS signal cabinet base mount condulet for pole mounted cabinets must be 3” or 4” in trade diameter, as required, as shown in the layout shop drawings and as directed by the Engineer.

Prior to each ITS signal cabinet installation, the Contractor must submit an approved cabinet wiring schematic and cabinet interior layout, detailed for each cabinet specified to the Engineer for approval. The cabinet schematic must depict all of the wiring required for each equipment, to complement of each specific cabinet.

ITS signal cabinets must not be installed without an Engineer approved schematic and interior layout.

Labeling:

The ITS signal cabinets must be furnished with a metal plate embossed with the following two (2) lines of text:

the information noted above may be permanently etched or embossed into the cabinet door, in an approved manner as to be clearly visible on the exterior of the cabinet.

If a nameplate is used, it must be 11 inches in length and 5 inches tall and welded to the outside of the front door, with the center of the nameplate located at the vertical centerline and midway between the top and the middle of the door. This plate must be painted with the same green paint as the exterior of the signal cabinet.

The nameplate text must have letters that are 0.875 inch in height; the information noted above must be embossed in a manner which allows this information to be read even after several coats of paint have been added to the cabinet. The welding for this plate must be neat in appearance.

The ITS controller cabinet must also be identified by model number, a serial number, on a metal nameplate visible on the inside of the cabinet. Consecutive serial numbers must also be stamped on the metal nameplate and fastened to the inside of the cabinet by stainless steel rivets, which must not protrude or otherwise be visible on the exterior of the cabinet.

NYC DOT requires that each separate procurement contract or construction contract have equipment serial numbers which are unique and identifiable. The Contractor must work with the NYC DOT, as directed by the Engineer, to establish a numbering scheme that allows the NYC DOT and its maintenance contractors to quickly identify the specific contract number which provided the ITS control cabinets.

This requirement must be followed for all subassemblies as well, so that the City NYCDOT can identify the origin of the part and determine which contractor is responsible for its maintenance.

ITS NEMA 3R ENCLOSURE TYPES

ITS ENCLOSURE TYPE	EXTERIOR DIMENSIONS	PAY ITEM
P44 2 bay Ground Pad Mount	55.62” H x 44” W x 25.27” D	PK-ESCR-461
344 (P38) Pole Mount	66.82” H x 24.25” W x 30.5” D	PK-ESCR-462
ASTC-12 Pole Mount	49” H x 21” W x 15” D	PK-ESCR-463
ASTC-8 Pole Mount	43” H x 21” W x 16” D	PK-ESCR-464

METHOD OF MEASUREMENT:

Each NEMA 3R ITS Signal Cabinet will be measured based on the number of complete units furnished and installed in accordance with the Contract Documents or as directed by the Engineer.

BASIS OF PAYMENT:

The unit price bid for each NEMA 3R ITS Signal Cabinet must include the cost of furnishing all labor, materials, mounting, concrete bases and equipment necessary to complete the work.

Payment for ITS cabinet grounding, interconnect cables, wires, fiber optic & Cat 6 patch cables, fiber optic distribution panels, surge protectors, rack mounted fiber optic patch field, rack mounted Cat 6 patch field, wire management, LED work lighting, heater and fan vents, active network equipment, hardware, electrical panelboards, circuit breakers, GFCI receptacle, ITS electronic peripherals, interface equipment, submittals, documentation, service energization, warranty, and the testing items referenced herein must be included under the unit price bid for these items.

The VMS sign controller and power supply will be paid for under the related VMS payment item.

Item No.	Item Description	Pay Unit
PK-ESCR-461	NEMA 3R ITS SIGNAL CABINETS, Type P44	EACH
PK-ESCR-462	NEMA 3R ITS SIGNAL CABINETS, Type 344	EACH
PK-ESCR-463	NEMA 3R ITS SIGNAL CABINETS, Type ATSC-12	EACH
PK-ESCR-464	NEMA 3R ITS SIGNAL CABINETS, Type ATSC-8	EACH

END OF SECTION

SECTION PK-ESCR 465 – RADAR BASED TRAFFIC MEASURING SENSOR (RTMS)

GENERAL:

Under this item, the contractor must furnish and install multi-channel ranging radar traffic sensor unit at locations shown on the plans and in accordance with the Contract Documents, per the requirements of NYC DOT – Signals and as directed by the Engineer.

Each unit must be a self-contained sensor which detects and monitors roadway traffic. The sensor must be a true presence traffic detector which provides volume, per lane occupancy, speed and vehicle classification information on up to twelve (12) user defined discreet detection zones from a single side-fire mounting location.

The sensor information must be available via a built-in TCP/IP communication option.

The work must include, but is not limited to furnishing, installation and acceptance testing of active equipment, mounting brackets, 24 v AC power supply. etc. Work must include on site programming, pattern alignment and site acceptance tests including all final connections on line and load sides of ITS installation.

Install all supplied equipment, as specified under this contract and coordination with any incidental equipment as supplied by others.

All work must be done in compliance with the latest published edition of NFPA 70 National Electrical Code (NEC) including the NYC Electric Code amendments to the NEC.

DESCRIPTION:

This work must consist of furnishing and installing NYC DOT Radar Traffic Sensor and mounts of the type described in this specification, in accordance with the contract documents and as directed by the Engineer.

MATERIALS:

All materials furnished, assembled, fabricated or installed must be new, corrosion resistant and in strict accordance with NY State/ NY City DOT, NEMA 4X, IP67, watertight construction, designed for single pole bracket mount. Mount must feature the ability to aim and tilt on three axis, locking adjustment for elevation angle, pitch and azimuth.

The radar traffic sensor must operate on the K-band with high vehicle resolution, in the 2.4 GHz band assignment. Radar sensor must be NEMA TS-02 and FCC compliant.

General requirements for material, construction, installation, testing, and documentation are presented in this specification. Where material or construction requirements presented in this specification conflict with the proposed model, the manufacturer and installer must provide written documentation describing the conflict and the manufacturer's plan for meeting the requirements of this specification.
All materials furnished, assembled, fabricated or installed must be new, corrosion resistant and in strict accordance with the details shown in the contract documents and this specification.
Each radar traffic detector must be factory encased in a rugged, watertight, gasketed enclosure.

Guarantee and Warranty:

The Radar Traffic Sensor unit shall be provided with a 3 year Manufacturer's Warranty, which shall name the NYC Department of Transportation as the owner. The Radar Traffic Sensor warranty shall include the costs to remove, ship and replace any Radar Traffic Sensor unit which fails to provide reliable performance during the entire warranty period.

The Manufacturer's warranty is in addition to the Contractor's project guarantee, which is described elsewhere in the contract provisions.

The Radar detector warranty begins on the date of formal acceptance of the installed Radar Traffic Sensor unit, by the Engineer.

Mechanical Requirements:

Functional:

The radar traffic sensor must be pole or sign structure mountable from a side-fire location and must comply with the following functional specifications:

- Must comply with the limits of a Class A digital device pursuant to Part 15 of the FCC rules
- The radar traffic unit must not interfere with any known equipment
- The radar traffic unit must support at least eight lanes of traffic within the range of 0 feet to 250 feet from the sensor when the sensor is mounted at least 17 feet higher than the roadway profile
- The width and location of the detection zones must be fully programmable via communications interface. The unit must retain its programming in non-volatile memory.
- Basic resolution of the unit must be 3 milliseconds or less
- The data reporting interval must be set within the range of 10 to 600 seconds in increments of ten seconds.

The radar traffic sensor unit must support both contention and polled protocols. In contention mode, the unit must report volume, average occupancy, and average speed over the reporting interval at the end of the interval.

In polled mode, a communication address must be assigned to the unit via its setup program. Upon receiving a command from the Radar Based Traffic Monitoring (RTM) center with the appropriate unit address, the radar traffic unit must respond with the accumulated traffic volume, average occupancy, and average speed in the period since the last poll request was issued.

- Complete communication protocol descriptions must be supplied with the submittals for the radar traffic sensor unit. These protocol descriptions must be complete and adequate for the purpose of developing software to retrieve the information from the sensor.
- The radar traffic sensor unit must not exceed: 2.5 lbs. in weight, plus mount.
- Nominal dimensions for the unit must be: 9.0 inches X 7.25 inches X 6.75 inches.
- The radar traffic sensor unit must operate in all prevalent traffic conditions, from 0 to 70 mph. Over this range, the unit must be accurate to:
    - Volume - 0% of Actual Count
    - Occupancy - The unit must be able to measure and output occupancy
    - Speed - Within ±10 mph of true speed as measured by radar gun. For instance, if true speed averages 50 mph, reported speed must be 40 mph to 60 mph
    - Classification - The unit must be able to differentiate long from short vehicles within 20% of actual count

Radar Traffic Coverage:

- Up to 12 discrete lanes of traffic.
- Elevation Angle: 50 degrees
- Zero Setback feature for near side pole mounting
- Azimuth: 12 degrees
- Range: 0 to 250 feet

- Detection Zones: programmable, up to 12
- Detection Zone width: 7-20 feet
- Detection Range increment: 1.2 feet
- Detection speed: 0-70 mph
- Event times: 1.3 msec.
- Data Interface: Base configuration, plus TCP/IP

Data sets:

- Volume
- Occupancy
- Speed
- Gap or headway
- Vehicle classes (up to six)
- 85th Percentile
- Data Storage: 8 MB, built in

Interfaces:

A single MS type bulkhead connector provides data communications, power and output signals. An optional matching MS male convertor cable must be ordered to provide IP-67 RJ-45 industrial cable connection at the device end.

Bluetooth® communications is also built in, to facilitate ground based local sensor status, configuration, setup, calibrations and traffic data access.

Environmental Conditions

The radar traffic equipment must meet all its specified requirements during and after being subjected to any combination of the following conditions:

- The ambient temperature range must be between: -40°F to +165°F.
- Relative humidity: up to 95 %, non-condensing.
- Rain or snow: up to 2 inches per hour.
- Vibration: 2 g up to 200 Hz sinusoidal.
- Shock: 5 g 10 millisecond half sine wave.

The design must be inherently temperature compensated to prevent abnormal operation. The circuit design must include such compensation as is necessary to overcome adverse effects due to temperature in the specified environmental range. The radar traffic unit must not require programming changes to compensate for different environmental conditions encountered from season to season.

Mounting Bracket:

The radar traffic detector must be supplied with a mounting bracket. The mounting bracket must be supplied with stainless steel bands which will allow the unit to be attached to traffic or overhead sign support poles or sign structure, ranging from 1 to 20-inch diameter. The appropriate size stainless steel bands must be supplied for the pole / structure supports designated in the plans to which the unit will be mounted.

Interface Cable:

A single composite custom interface cable must be provided which will provide AC power to the radar traffic unit as well as weatherproof Cat 6 TCP/IP data lines, required to interface with an Ethernet managed switch unit, installed in the ITS signal equipment cabinet. The composite cable

must terminate in a metal weatherproof MS connector, rated for outdoor usage, on the sensor side.

The ITS signal side of the composite Cat 6 TCP/IP cable must be terminated with an industrial weatherproof RJ-45 jack suitable for connection to a local Cat 6 Ethernet Patch field to be installed within the ITS Signal cabinet.

The 24 VAC power for the Radar Traffic Sensor must be labeled and terminated with suitable connection to a standard AC connector matched to weather resistant, 300 V rated cord, as may be required for installation at the pole mounted traffic sensor's MC composite cable connector and at the pole or sign structure mounted ITS Traffic equipment cabinet's, DIN mounted 24 VAC power supply. The radar traffic detector assembly composite interface cable must be designed for outside use, must utilize stranded wire and must be of sufficient length to connect to the electronic equipment with no additional splices.
The Contractor must submit layout and pole or sign structure mounting shop drawings for each Radar Traffic sensor specified, submit for review and approval by the NYC DOT and the Engineer.

ITS Signal Cabinet Wiring:

ITS Signal Cabinet wiring must be provided for the equipment complement as specified on the plans. All cabinet wiring where connected to terminal strips, active equipment switches, SPD, Receptacles, work lights, power supplies, etc., must be identified by the use of insulated, heat shrink, machine pre-printed sleeving slipped over each wire before attachment of lugs, connectors or making the connections. The wire markers must carry the legend in plain words with enough details and unique conductor identifications so that a translating sheet will not be required.

All field wires must be cut to the proper length before assembly. No wires must be doubled back to or folded over to take up slack. Wires must be neatly laced into cables with nylon lacing. Cables must be secured with nylon cable clamps.

The ITS Signal Cabinet enclosure is to be paid for under a separate pay item for NYC DOT NEMA 3R ITS Signal Cabinets, Item PK-ESCR-461/462/463/464.
RJ-45 Data Surge Protector:

An Ethernet Surge Protection Device (SPD) must be installed in each ITS Signal cabinet between the load side of the TCP/IP Cat 6 cable, to the pole mounted radar traffic unit and the ground bar. The surge protector must have a minimum continuous current rating that is adequate for the protected equipment load (and any associated start up current surges) in each cabinet.

The Ethernet SPD must have the following characteristics:

(a) Working Voltage

The SPD unit must be rated for operation on a single Cat 6 Ethernet cable, with a nominal working voltage rating of: 48 volts. SPD is suitable for POE+ to IEEE 802.3at, up 57 V.

(b) C2 Nominal Discharge Current

The SPD unit must protect against a nominal (8/20 μs) Line to PG, surge current of: 2.5 kA. Rated Total nominal discharge current of: 10 kA

Surge protection devices (SPD) must be provided, installed within the ITS Signal equipment cabinet, one SPD for each Cat 6 Ethernet cable. Provide 35 mm DIN rail mount.

SPD Model: BSPD48RJ45, UL 497B listed, Type 1 as Manufactured by: Cooper Bussmann or Engineer Approved equivalent

Hardware:

All external screws, nuts, and locking washers must be stainless steel; no self-tapping or Tek screws must be used, unless specifically approved by the Engineer. All screws, nuts, and locking washers used internally must be of corrosion resistant material, or Stainless Steel to resist corrosion. All material furnished must be new, first quality, and used in accordance with the highest industry practices.

MATERIAL:

All parts must be made of corrosion resistant material, such as stainless steel, aluminum, or brass; or must be treated with corrosion resistance such as cadmium plating or Hot Dip Galvanizing. All materials used in construction must be resistant to fungus growth and moisture deterioration. Dissimilar metals apt to corrode through electrolysis under the environmental operating conditions specified must be separated by an inert material.

Manufacturer:

The Radar Traffic Sensor must be completely integrated with and compatible with the existing NYS / NYC Department of Transportation Regional Traffic Monitoring Center (RTMC) equipment, including DOT existing ITS communications and infrastructure.

NYC DOT RTMC and NYC DOT Signals approved Radar Traffic Sensor equipment manufacturer must be:

Model: RTMS Sx-300 Option 2 TCP/IP as manufactured by:

Image Sensing Systems
500 Spruce Tree Centre
1600 University Av. West
St. Paul MN 55104
1-651-603-7700
www.imagesensing.com

No alternates will be approved.

CONSTRUCTION DETAILS:

Submittal Drawings:

The contractor must prepare Radar Traffic Sensor layout and electrical shop drawings which must detail the complete radar traffic unit assembly, layout and wiring of all components to be supplied including the Radar Traffic sensor mounting hardware.

These shop drawings must detail the exact placement of each radar traffic sensor unit showing the height the unit is mounted at, the proposed detection zone, aiming patterns and radar sensor hardware mounting methods. Drawings must be in AutoCAD format (2D), drawn to scale, showing both plan and section views.

Shop drawings must also include details of the installation of a composite communications cable from the radar traffic unit, and separate 24 VAC power and Cat 6 ethernet data cables to the pole / sign support mounted ITS signals equipment cabinet.

Site Demonstration and Start up:

The contractor must perform a field demonstration of the traffic sensor assembly at the identified OSS-1 site. The demonstration is intended for confirming the site specific conditions under which the radar sensor unit will be mounted and aligned, in order to operate reliably for the project.

The contractor must utilize factory technical personnel to validate the radar traffic unit's site specific installation, radar coverage, aiming adjustment and data accuracy, The factory technical

personnel must validate and confirm the radar traffic sensor is mounted at the optimum height and lane coverage, on the assigned OSS-1 structure.

Via the use of a bucket truck, the radar traffic mounting assembly must be physically aimed and calibrated to provide optimum coverage for the travel lanes, indicated on the shop drawing and layout plans for the zones to be covered.
Once mechanically aimed and secured, the radar traffic sensor's diagnostic software application must be utilized by the contractor and the factory technical personnel to pin-point optimum detector width settings. In addition, the communication address assigned to the new traffic sensor unit must be programmed, in coordination with the Director of the NYC DOT RTMC.

A calibrated radar traffic gun must be used for the purpose of confirming vehicle speeds on the traffic lanes at the time that the assembly is mounted and aimed. The calibrated vehicle speeds must be provided to the diagnostic program for the purpose of calibrating speed measurements obtained for the new radar traffic sensor assembly.

Once the radar traffic unit is programmed, a System Acceptance Test with traffic validation test must be conducted to verify the entire sensor installation, end to end connectivity from the new radar traffic sensor to the RTMC. The System Acceptance Test must include traffic and lane volume measurements against manual counts and speed measurements validated against calibrated radar gun readings.

The new unit must operate within the tolerances included in the Functional Requirements specifications for volume, occupancy, and speed.

At the completion and acceptance of the installation and all testing specified, the Department shall have beneficial use of the Radar Traffic Sensor unit. The Radar Traffic sensor unit will begin the operational use, acceptance and warranty periods.

METHOD OF MEASUREMENT:

Each Radar Based Traffic Measuring Sensor (RTMS) unit will be measured based on EACH complete sensor units furnished, installed, activated, calibrated, tested and accepted, each in accordance with the Contract Documents or as directed by the Engineer.

BASIS OF PAYMENT:

The unit price bid for each RADAR BASED TRAFFIC MEASURING SENSOR must include the cost of furnishing all labor, materials, incidentals, SPD, mounting, calibration, testing and equipment necessary to complete the work.

Item No.	Item	Pay Unit
PK-ESCR-465	RADAR BASED TRAFFIC MEASURING SENSOR (RTMS)	EACH

END OF SECTION

SECTION PK-ESCR 466 – ITS CAT 6 OUTDOOR ETHERNET CABLE-GEL FILLED

GENERAL:

Under this item, the contractor must furnish and install ITS Cat 6 Outdoor Ethernet Cable, at locations shown on the plans and in accordance with these Contract Documents, per the requirements of NYCDOT – Signals and as directed by the Engineer.

All work must be done in compliance with the latest published edition of NFPA 70 National Electrical Code (NEC) including the NYC Electric Code amendments to the NEC.

DESCRIPTION:

This work must consist of furnishing and installing ITS CAT 6 OUTDOOR ETHERNET CABLE-GEL FILLED of the type described in this specification, in accordance with the contract documents and as directed by the Engineer.

MATERIALS:

All materials furnished, assembled and installed must be new, ANSI/TIA 568-C.2 compliant which meets or exceeds ISO 11801 Category 6 performance for TCP/IP data at speeds of 10/100 BASE-T (IEEE 802.3) and 1000 BASE-T (GIGABIT ETHERNET).

The cable must be of Gel filled construction to prevent moisture migration for use in underground and outdoor wet applications. The cable must be of the Outside Plant (OSP) type.

The cable must be suitable for wide temperature extremes: (-49º F to + 176º F).

General requirements for material, construction, installation, testing, and documentation are presented in this specification. Where material or construction requirements presented in this specification conflict with the proposed model or products, the manufacturer and installer must provide written documentation describing the conflict and the manufacturer's plan for meeting the requirements of this specification. All materials furnished, assembled, fabricated or installed must be new, corrosion resistant first quality and in strict accordance with the details shown in the contract documents and this specification.

Mechanical Requirements:

Cable Construction

The OSP Cat 6 cable must be suitable for above and below ground installation in conduit and duct bank installations. Direct burial methods are not approved. Nominal specifications for the OSP Cat 6 cable must be:

- 23 AWG, solid, bare annealed copper conductors
- Polyolefin conductor insulation
- UV & Abrasion resistant Polyethylene outer jacket
- Cable Diameter: 0.25" OD
- Bend Radius: 1.0" minimum
- Pulling force: 32 lbs. maximum
- Pairs (UTP); 4
- Jacket color: Black
- Standard Put up: 1,000 ft. reel.
- Jacket Print legend: contains footage markings from 1,000 to 0 feet
- Made in U.S.A.

Manufacturers:

The Category 6 Outdoor Ethernet Cable must be:

- GenSPEED® Item: 7136100 as manufactured by General Cable
- BBD6 Item: 04-001-68 as manufactured by Superior/Essex Wire
- C6CMX-2043BK as manufactured by CRN/Primus Cable
- Or Approved Equal

CONSTRUCTION DETAILS:

The Category 6 Outdoor Ethernet Cable must be field terminated with ezEX38 RJ-45 cable connectors which feature a unique Hi-Lo conductor stagger load bar. The connectors must be designed to allow conductors to pass through the front end of the connector making it easy to verify the wiring sequence before terminating.

The ezEX38 connector is typically used with Cat 6 cabling and is recommended for PoE/PoE+ and Data applications. The termination tool for these connectors is: EXO Crimp Frame and EXO-EX Die (100061C).

RJ-45 ezEX38 connector specifications:

- Insulation Diameter (Conductor) Size range: .033” – .038” (ezEX38)
- Max. conductor Outer Diameter: .290”
- 50 micron - Gold plated contacts
- Category 5e/6/6A compliant
- Solid or Stranded 24-22 AWG conductors
- TIA, TAA, RoHS, UL & FCC compliant
- Made in the U.S.A.

The contractor must perform a field certification of each segment of Category 6 OSP cable to demonstration the field terminated cables are tested to meet the data throughput requirements of the EIA/TIA 568A/B. The Ethernet network cables must be tested to a speed of 1 GBS, in accordance with IEEE standard 802.3

Cat 6 Outdoor Ethernet Cables must be tested for mis-wires, noise, faults and to assure the network cables are able to support the speed capabilities of the active equipment. Test results must be documented for each cable segment. Cable segments must match the cable identification (tags) on each test report document

METHOD OF MEASUREMENT:

ITS CAT 6 OUTDOOR ETHERNET CABLE-GEL FILLED will be measured based on the number of linear feet of connected cables furnished, installed, terminated, tested and accepted, each in accordance with the Contract Documents or as directed by the Engineer.

BASIS OF PAYMENT:

The unit price bid for each linear foot of ITS CAT 6 OUTDOOR ETHERNET CABLE-GEL FILLED installed must include the cost of furnishing all labor, materials, incidentals, identification, and related cable equipment necessary to complete the work.

Item No.	Item	Pay Unit
PK-ESCR-466	ITS CAT 6 OUTDOOR ETHERNET CABLE-GEL FILLED	LF

END OF SECTION

SECTION PK-ESCR 467 – ITS REMOVALS

GENERAL:

Under this item, the contractor must remove ITS related equipment, at locations shown on the plans and in accordance with these Contract Documents, per the requirements of NYC DOT – Signals and as directed by the Engineer.

All work must be done in compliance with the latest published edition of NFPA 70 National Electrical Code (NEC) including the NYC Electric Code amendments to the NEC.

DESCRIPTION:

This work must consist of removal of ITS equipment, enclosures, power supplies, active components, antenna, coax cables, cameras VMS, radar vehicle sensors cabinet, junction boxes, conduit, wiring and similar signals equipment, as described in this specification and in accordance with the contract documents.

MATERIALS:

All equipment, cabinets and equipment to be removed must be turned over to the NYCDOT, unless otherwise directed by the Engineer.

CONSTRUCTION DETAILS:

The contractor must inventory and test each piece of ITS equipment in the presence of the engineer and a representative of NYCDOT-Signals, to assure the ITS equipment to be removed and salvaged was fully operational, before removal process is started.

The contractor must identify each cable and conductor associated with the ITS equipment to be removed, with linen strung tags, prior to the equipment being declared out of service.

The Engineer, coordinating with a representative of NYCDOT-Signals, must coordinate the identification and removals of active ITS data and communications wiring to each ITS equipment and declare each system and component out of service, prior to its disconnection.

A written record of each piece of ITS equipment to be removed must be made, including model and serial numbers and location of the equipment subject to removal. All removed ITS equipment must be cleaned, bubble wrapped, boxed, labeled and turned over to the Engineer for salvage as directed by the Engineer.

Ancillary ITS equipment such as poles, mounts, enclosures, extensions, structural supports, cables, harnesses, clamps and associated ITS materials are to be presented to the Engineer for review of suitability for salvage.

All equipment, materials, removed conduits and cables not identified for salvage must be properly disposed of by the contractor.

METHOD OF MEASUREMENT:

ITS REMOVALS will be measured for payment based on a lump sum basis for the complete services furnished in accordance with the Contract Documents or as directed by the Engineer.

BASIS OF PAYMENT:

The lump sum price bid for ITS REMOVALS must include the cost of furnishing all labor, equipment, materials, incidentals, identification, packaging, transportation and the disposal of any materials, conduit, cables or incidental work necessary to complete this bid item.

Item No.	Item	Pay Unit
PK-ESCR-467	ITS REMOVALS	L.S.

END OF SECTION

PK-ESCR-468 LED FULL COLOR VARIABLE MESSAGE SIGN (VMS) - OSS-1

PK-ESCR-469 LED FULL COLOR VARIABLE MESSAGE SIGN (VMS) - OSS-8S

GENERAL:

The Variable Message Sign (VMS) must be LED FULL COLOR system. Unless specifically indicated, these specifications apply to all types of VMS', inclusive of the sign case and mounting hardware.

The VMS must be compatible with existing NYCDOT Regional Traffic Monitoring Center (RTMC) and Signals infrastructure, using like technology. To ensure compatibility and interchangeability with equipment furnished under previous projects, the VMS must be compatible with Daktronics VX-2428, 20 mm LED pixel, RGB Color products presently used in the NYCDOT. Refer to Technical Criteria section for each VMS sign identification and sign specific technical data.

Each sign must be provided with the mounting hardware necessary to attach the sign assembly to the VMS support structure. All the structural and support components of the VMS signs, attachments and support structure attachment hardware must be designed, checked, signed, and sealed by a Professional Engineer, holding a valid license to practice engineering in the State of New York.

The VMS communications protocol must be the National Transportation Communication for ITS Protocol (NTCIP) Version 02.35 (1203 v02.35).

The VMS must be designed to comply with NEMA TS-4.

Internal VMS access for all maintenance must provide unobstructed viewing, removal and replacement of any non-structural component within the sign case and ground/pole mount equipment cabinets. Access must be via a non-walk in, hinged, swing-up front access.

The VMS front face must not distort in a manner that adversely affects LED message legibility when subjected to adverse weather conditions including those involving wind, rain and snow.

The removal of any combination of one or more VMS modules must not alter the structural strength of the sign display assembly or the sign case.

The removal or failure of any combination of display modules must not affect the operation of the remaining functional modules in any way.

All serviceable components (except the Uninterruptible Power Source) must weigh 50 pounds or less.

MATERIALS:

Each VMS must consist of the following minimum components and general requirements:

Light Emitting Diode (LED), Full Matrix Display technology.

Structural supports to VMS sign case mounting brackets, I-beams, Z bars, bolts, nuts, washers and other hardware required for the installation to the VMS OSS Sign support structure.

VMS Controller Unit, VMS Controller Unit Software, VMS maintenance Software and documentation, Fiber Optic Cable (or approved manufacturers' cable) for connection between the sign case control and the Roadside Signal Cabinet Controls.

All hardware and fasteners must be stainless steel except for the VMS sign case lifting eyes which must be hot dipped galvanized, high strength steel. Lifting eyes must be attached to the VMS sign case with nylon locking hex nuts and flat washers. Washers must be placed on each side of the

sign case (interior/exterior) and be fabricated of stainless steel or other metal that is chemically nonreactive with the aluminum sign case material. Lifting eyes must be left in place. VMS sign case intrusions for lifting eyes must be sealed to prevent liquid or vapor infiltration. Alternative VMS lifting configurations must not be used unless preapproved by the Engineer.

All electronic components must be rated for NEMA TS-4 environmental conditions. Electrical/electronic component power, signal, data, board to board, board to connector and grounding connections must be noncorrosive low loss, vibration resistant points that pass the minimum and maximum current levels without loss levels that reduce the performance of the inter-mating assemblies when subjected to NEMA TS-4 environmental conditions.

All VMS equipment and controller must operate at -31 degrees F to 165 degrees F

The VMS Manufacturer must have a minimum of 10 years manufacturing LED DMS for ITS application, must be certified for the latest ISO 9001 standards and must have a minimum of 100 outdoor LED DMS. VMS installations currently in operation by similar Transportation agencies in the U.S.

The display unit must be designed to provide at least 10 years useable life.

TECHNICAL CRITERIA:

PAY ITEM: PK-ESCR-468

VMS SIGN TAG: VMS-01

FDR DRIVE – NORTHBOUND, EAST OF JACKSON AVE. OSS-01

VMS SERIES: VF-2420

MATRIX: 96 X 288

LED PITCH: 20

LED VIEW ANGLE: 30°

LED TYPE: FULL MATRIX RGB COLOR

SIGN DIMENSIONS: 19’-11” W
7’-10” H
1’-4” D

SIGN ACTIVE AREA: 19’-6 “ W
6’-6” H

SIGN CHARACTERS:	6” HEIGHT	9 LINES OF 48 CHARACTERS	300 FEET
VIEW DISTANCE:	9” HEIGHT	5 LINES OF 29 CHARACTERS	

PAY ITEM: PK-ESCR-469

VMS SIGN TAG: VMS-02

FDR DRIVE – SOUTHBOUND, NORTH OF E. 10TH STREET OSS-8S

SERIES: VF-2420

MATRIX: 64 X 192

LED PITCH: 20

LED VIEW ANGLE: 30°

LED TYPE: FULL MATRIX RGB COLOR

SIGN DIMENSIONS: 13’-5” W
5’-8” H
1’-4” D

SIGN ACTIVE AREA: 13’-0 “ W
4’-3” H

SIGN CHARACTERS:	6” HEIGHT	6 LINES OF 32 CHARACTERS 300 FEET
VIEW DISTANCE:	9” HEIGHT	3 LINES OF 19 CHARACTERS

MANUFACTURER:

VMS SIGN AND CONTROLLERS MUST BE FULLY COMPATIBLE WITH AND MATCH THE EXISTING NYCDOT TRAFFIC & SIGNALS STANDARDS FOR:

FULL COLOR LED VARIABLE MESSAGE SIGNS (VMS), AS MANUFACTURED BY:

DAKTRONICS
117 PRINCE DRIVE
BROOKINGS, SD 57006
(605) 692-0200

No alternates will be approved.

1. Sign Housings, Faces, Framing and Mounting Members

The VMS signs must utilize vertical, multiple door construction with hinged and gasketed door panels which allows a single maintainer to achieve access to a section of the sign housing from the front of the assembly while working from a standard bucket or lift truck. The doors must have retaining latches to hold the door open at 90 degrees and captive latches to secure it.

The VMS sign housing top must be crowned to prevent standing water and must be constructed so that it is weather resistant under all conditions. Maintenance and repair of VMS must be from the outside through front access doors. Front doors and other panels required to be moved out of their normal closed position for maintenance or repair of the VMS must not impede access of a maintenance person to the internal components of the VMS from a bucket truck or boom lift.

Sign housings must be constructed of aluminum, alloy 5052 H32 or H34, and with a minimum thickness of 0.125 inch. Seams must be continuously welded (chemically bonded only as approved by the Engineer) and smooth except for the KYNAR 500 polyvinylidene fluoride (PVDF) or approved equal, coated sign face. All welds must be neatly formed and free of cracks, blow holes and other irregularities. All exterior cabinet welds must be made using the gas tungsten arc (TIG) welding method. All internal cabinet welds must be made using the gas metal arc (MIG) or TIG process.

Other welding methods may be used only if approved by the Engineer, in advance of fabrication. All inside and outside edges of the cabinet must be free of burrs or sharp edges. All edges must be filed to a radius of 0.03125 inch minimum. ER5356 aluminum alloy bare welding electrodes must be used and conform to American Welding Society standard AWS A5.10 requirements for welding on aluminum. Procedures, welders and welding operators must conform to AWS requirements as contained in AWS B3.0 and C5.6 for aluminum. Framing structural shapes must be constructed of aluminum, alloy 6061T6.

Non-corrosive materials must be used, throughout each sign. Corrosion protection must be provided between dissimilar metals. Sign cases must be cleaned and de-oxidized after welding. The sign cases must have a smooth, uniform finish without rivet holes, visible scratches or gouges on the outer surfaces. The front of the cases must be finished matte black. The remaining exterior

surfaces must be natural aluminum finish. Other sign finishes may be acceptable if preapproved by the Engineer. The sign case interiors must be unpainted.

Signs must have polycarbonate sign face coverings. Coverings must be weather tight, ultraviolet protected, non-diffusing, polycarbonate (non-matte finish) nominally 1/4-inch thick unless otherwise approved by the Engineer.

Polycarbonate sign faces must be covered with a .090-inch minimum thickness aluminum mask for Type I and II VMS LEDs. The aluminum mask must provide openings directly in front of each pixel unless surface mount technologies are utilized. Alternately, the front of each LED display module must be black and contain louver-type openings for the LED pixels.

When louvers are used, the LED pixels in the module must be protected by a black contrast-enhancing silicone elastomer or approved equal that surrounds the base of the LEDs and seals the entire front face of the module to prevent penetration by the elements and corrosion, while not obstructing the viewing angles of the LEDs. Pixel openings must be of sufficient size as to not interfere with LED light output from the road viewing angles stipulated for the display. The sign face must be designed to minimize deflection.

Sign housing, face coverings, framing and mounting members must be designed to conform to the requirements of the current edition of the AASHTO's Standard Specifications for Structural Supports for Highway Signs, Luminaires, and Traffic Signals and the following clarifications:

Basic wind speed must be used in the designs. Alternate method for wind pressures must not be used.

When the installation location of the sign structures being designed lie between isotachs, the basic wind speed must be determined by using the higher adjacent isotach. Any optional design parameters indicated in the AASHTO specification that are allowed when acceptable to the owner must not be used for the designs.

Signs must be constructed to present a clean, neat appearance; and the equipment located within must be protected from moisture, dust, dirt and corrosion. Sign enclosures must contain small weep holes for draining moisture that accumulates in the signs from condensation. Weep holes must be designed to prevent the entrance of insects or roadway debris.

Signs must be attached to the vertical truss of the butterfly and overhead sign structure with I-beams. VMS signs must be furnished with all required attachments and hardware for attachment to the I-beams on overhead and butterfly sign structures. The number of I-beams needed and the method of attaching the I-beams to the sign housing and the vertical truss of the overhead sign structure must conform to the requirements of the current edition of the AASHTO's Standard Specifications for Structural Supports for Highway Signs, Luminaires, and Traffic Signals.

Any optional design parameters indicated in the AASHTO specification that are allowed when acceptable to the owner must not be used for the designs.

Lifting eyes or the equivalent must be provided for moving and mounting signs. Sign housings must be designed so that the sign(s) can be shipped and temporarily stored without damage or subjection to undue stresses prior to installation on the support structure.

Each sign must be shipped with a temporary wood support frame that permits the shipping/storage of the sign in an above ground vertical position without damage to the sign housing.

The exterior of sign housing must not have any manufacturer decals or identification plates of any kind attached to the housing. The interior of the sign housing must have a permanent stainless-steel nameplate with the Project Contract number, date of manufacture, the model number, the

serial number and the sign manufacturer identified. The label data must match the documentation package provided with each VMS.

Factory site acceptance date must also be recorded for each sign.

2. Power Supplies:

VMS sign power supplies must operate from 120 VAC power. The LED displays must be operated at low internal DC voltage not exceeding 24 VDC. Power supplies must be solid state electronic regulated output comprised of Ferro-resonant components, or a Department approved equivalent.

Power supplies must provide N+1 redundancy, or approved equivalent method. Power supplies must be rated so that if one supply fails, the other(s) can operate the entire LED section under nominal load conditions. A minimum of one LED driver per display module must be provided unless otherwise approved by the Engineer. A failure of one display module driver must not cause a failure of the others. A single failure of one power supply must not cause a failure of the other(s).

Power supplies must meet NEMA TS-4 temperature requirements operating from -31°F to +165°F (-35°C to +74°C). Power supplies must have over-voltage protection devices that supplement the VMS assembly's over voltage, surge and transient voltage protection devices.

Power supplies must be short circuit protected by turning the DC power off and must reset automatically after 5 seconds of AC power off. Power supplies must also be protected by a minimum overload allowance of 125 percent and have an efficiency rating of at least 80 percent.

Power supplies must be UL listed and RoHS compliant for the appropriate application.

Power supplies must be installed with the terminals/connectors unobstructed by hardware or mounting brackets. The operator must be able to read the terminal designations and measure voltages without removing the power supply or obstructions.

Power supplies must have a visible means of determining power status of individual supplies via the VMS controller and the supplies themselves. Indicators must identify whether the supplies are functioning properly and outputting power at the correct/calibrated levels.

The VMS controller must indicate that any power supply has failed and power supply must have an identifier tag that indicates the specific power supply that has failed.

The regulated DC power supplies must conform to the following specifications, and must be compatible with the DC voltage requirements set forth by the VMS equipment manufacturer:

Nominal maximum output power rating of 1000 watts

Operating input voltage range must be a minimum of 90 to 264 VAC

Operating temperature range must be a minimum of –30ºF to +165ºF (-34º C to +74º C)

Maximum output power rating must be maintained over a minimum temperature range of –30ºF to +140ºF (-34º C to +60º C)

Power supply efficiency must be a minimum of 80%

Power factor rating must be a minimum of 0.95

Power supply input circuit must be fused

Automatic output shut down and restart if the power supply overheats or one of the following output faults occurs: over-voltage, short circuit, or over-current

Power supplies must be UL listed

Printed circuit boards must be protected by an acrylic conformal coating

3. Electrical Panelboard

The VMS sign controller Signal enclosure must include a UL listed electrical panelboard with, copper busses, bolt on circuit breakers, factory installed, inside the VMS sign controller enclosure. 120/240 V, Single Phase, 3 wire, grounded AC power is required for equipment in the sign case and is fed from the VMS sign ITS Signal controller enclosure.

Refer to pay item 461 for the ITS Signal controller enclosure for OSS-1 VMS-01.

Refer to pay item 462 for the ITS Signal controller enclosure for OSS-8S VMS-02

The sign case's electrical (sub) panelboard must be rated for a minimum 60 amperes. Provide six (6) 20 amp single pole circuit breakers. Circuit breakers and wiring must be rated and in accordance with the NEC and the anticipated loads that will be experienced by traffic equipment, interior lighting and power receptacles located within the VMS sign cases. Circuit breakers of the appropriate AIC rating must be provided with each panelboard.

VMS wiring must be rated and in accordance with the NEC and the anticipated loads that will be experienced by equipment, interior lighting, and power receptacles within the VMS housing and the 2 pole branch/feeder circuit to the sign case. The power wiring and circuit breaker ratings must be sized to accept a short circuit current up to: 22,000 AIC. The VMS sign conductors must not sustain any damage or reduction in current capacity at the maximum short circuit current level.

The VMS and associated equipment and enclosures must be listed by the Underwriter's Laboratories (UL) or another acceptable Nationally Recognized Testing Laboratory (NRTL).

VMS Control equipment and enclosures must also be listed to UL 1422 Standard for Control Centers for Changing Message Type Signs.

Failure to provide acceptable product listing or code conformances will be cause for product rejection.

4. Temperature Sensor

VMS Sign cases must be fitted with programmable temperature sensor(s) to monitor the interior temperature of the sign. The temperature sensor(s) must be placed near the top of the display face to monitor the nominal high temperature of the LED area.

Temperature sensor(s) must monitor temperature within the range of -220º F to +1,850º F (-30º C to +85º C) and must be calibrated to accurately report temperatures within +/- 3 Degrees C. Temperature sensor data must be monitored by the sign controller in order to respond to temperatures fluctuations affecting the equipment installed in the sign case and the LED pixels in the display of the sign face. –30º F to +165º F (-34º C to +74º C)

5. Interior VMS Environmental Control

The VMS must contain systems for cabinet ventilation and safe over-temperature shutdown as required to comply with NEMA TS-4 environmental requirements.

6. Housing Ventilation System

The ventilation system must be a positive-pressure, filtered, forced-air, fully ducted system which cools both the display modules and the sign housing interior. Negative pressure systems that use exhaust fans are not acceptable.

The VMS must contain an electronically controlled ventilation system and a failsafe thermostat designed to keep the internal VMS air temperature lower than +140°F (+60°C), when the outdoor ambient temperature is +115°F (+46°C) or less.

The ventilation system must consist of two or more air intake ports. Intake ports must be located near the bottom of the VMS rear wall. Each intake port must be covered with a filter that removes airborne particles measuring 500 microns in diameter and larger. One or more fans must be mounted at each intake port. The fans must have ball or roller bearings, must be permanently lubricated and must require no periodic maintenance. These ventilation fans must positively pressure the VMS cabinet.

Fans and air filters must be easily removable and replaceable from inside the VMS housing without the use of tools. Both inlet and exhaust must use environment-friendly, washable, reusable electrostatic filters.

Each ventilation fan must contain a sensor to monitor its rotational speed, measured in revolutions per minute. The fan speeds must be reported via a CAN (controller area network) communication network to the sign controller upon command.

The ventilation system must move air across the rear of the LED modules in a manner such that heat is dissipated from the LED's. The airflow must move from the bottom of the cabinet towards the top to work with natural convection to move heat away from the modules.

Each exhaust port must be located near the top of the rear VMS wall. One exhaust port must be provided for each air intake port. All exhaust port openings must be screened to prevent the entrance of insects and small animals.

An aluminum hood attached to the rear wall of the VMS must cover each air intake and exhaust port. All intakes and exhaust hoods must be thoroughly sealed to prevent water from entering the VMS.

7. Over Temperature Safety Shutdown

The VMS must automatically shut down the LED modules to prevent damaging the LEDs if the measured internal cabinet air temperature exceeds a maximum threshold temperature.

All electronic setup and adjustments for the display must be enabled from the ground mounted equipment cabinet.

8. Communication between Sign Controller Cabinet and VMS Sign Case

VMS Communications Cable - Communication between the VMS sign case located equipment and the VMS sign controller, installed in the ITS controller cabinet, must be by fiber optic interfaces. Electrical conductor data/control cable circuits must be used as an interface or transmission media for interconnection between the ground control cabinet and the sign case equipment. Support must be provided for other standard communication media including Fiber and Category 6, IEEE 802, Ethernet copper cables.

The Contractor must install fiber optic cable including termination facilities and system compatible transceivers as incidental to the VMS equipment. The VMS manufacturer must pre-terminate and test the fiber optic cable which runs between the VMS sign and the VMS sign controller.

Electrical Transient Protection - All electrical connections internal to the VMS sign case where an electrical conductor of any type is terminated, must be provided with one or more transient noise suppression devices. The devices must be of the multiple strike type and must not require resetting/replacement when exposed to 100 times the electrical current capacity of the electrical conductor/terminator which it is fitted to as a protection device.

A bonding conductor, connected to earth ground must be the common voltage drain point for each of the transient protection devices. The device and grounding must suppress the transient to a level of no more than the normal operating voltage / current of the connected circuit. No transient

protection device may be bonded to any Direct Current connection point or to the ITS Electrical Service neutral.

The metal case of each sign must also be electrically bonded to the sign support structure at all mounting bolt locations using non-corrosive tin-plated copper compression connections to form an effectively terminated ground path to the electrical grounding conductors. The bonding system must consist of an electrical bond wire or properly prepared electrical contact plate. The sign structure, in turn, must also be electrically bonded to earth ground through a grounding electrode array which provides a measured minimum of 5 ohms to true ground conductivity. The VMS manufacturer must provide a VMS system compatible with the OSS structure and the utility grounding requirements.

Other items that are required to form and install complete and fully functional VMS assemblies that are not described in this document and that may be Manufacturer specific, they must be identified as to function and supplied with the VMS assemblies. These items must be included in the products provided for in the contract and must be considered incidental to the work. The VMS sign must be furnished and installed as a complete, fully functional system and must include all accessories and incidentals required to operate in coordination with the existing NYCDOT RTMC based VMS network systems.

9. Displays

Displays must be full matrix. Signs must be designed to provide proper spacing between the lines of text for the characters and lines of text as indicated herein. Sign displays must have sufficient borders on all four sides for display clarity and background contrast. Characters and/or shapes must be formed on a matrix comprised of rows and columns forming a continuous line.

Pixel columns and rows must be perpendicular. Individual characters must be formed by pixels within a character matrix defined by the character font. All upper-case characters must be displayed over the entire height of each character matrix. Character to character spacing must be determined by the font selected by the user. Lower case letters that extend below the bottom of the line base must be proportional in location and style per line. Both fixed and proportional spaced fonts must be supported.

Legibility distance must be defined as the legibility of displays from a specified distance and must include daylight hours with direct sunlight on the face and behind the VMS and must meet Federal MUTCD section 2L.03 message legibility requirements: 18” character message must be legible from a minimum distance of 800 feet in normal daylight conditions

Each sign must be able to display a message composed of any combination of the following characters and shapes:

All upper-case letters A through Z
All lower-case letters a through z
All decimal digits 0 through 9
A blank or space
Punctuation marks shown in the brackets [. , ! ? – ‘”/( )]
Special characters shown in brackets [# $ % & * + < >]
32 or more special graphics shapes editable by the user.

The sign displays must support text and graphic displays in accordance with the requirements of the NTCIP communication protocol specified and must be downward compatible with the Department’s implemented NTCIP V1 protocol. All fonts must be editable through the vendor’s maintenance laptop and from the RTMC’s ATMS software. Ensure VMS fonts have character dimensions that meet the MUTCD, Section 2L.04, paragraph 08.

Ensure that full-color signs can display the colors prescribed in the MUTCD, Section 1A.12. The display must allow for multiple fonts, 3 line or more display formats. Support Static, Flashing and multiple page messages (minimum 3-Page messages). On/Off flashing times and message times are adjustable in 0.1 seconds increment.

The VMS must meet NEMA TS-4 standards for inter-line and inter-character spacing.

The time required to clear any display and post any new display must not exceed 500 milliseconds.

The VMS must conform to the following display characteristics requirements unless otherwise approved by the Engineer

Messages must be configured with priorities and durations. Messages must be activated by the controller keypad, by an internal time-based schedule, or by events (e.g., power or communication loss can trigger a message) Light Emitting Diodes (LEDs)

All full color LED's provided for the manufacture of VMS must conform to the following requirements in addition to those above:

Red LEDs must utilize AlInGaP semiconductor technology and must emit red light that has a peak wavelength of 618-630nm.

Green LEDs must utilize InGaN semiconductor technology and must emit green light that has a peak wavelength of 519-539nm.

Blue LEDs must utilize InGaN semiconductor technology and must emit blue light that has a peak wavelength of 460-480nm.

Each color LED module must contain a minimum of 256 surface mount LED pixels, configured in a two-dimensional array. The pixel array must be a minimum of nine (9) pixels high by ten (10) pixels wide.

The distance from the center of one pixel to the center of all adjacent pixels, both horizontally and vertically, must be as directed by the Engineer.

The LED manufacturer must perform color sorting of the bins. Each color of LEDs must be obtained from no more than two (2) consecutive color "bins" as defined by the LED manufacturer.

The LED manufacturer will perform intensity sorting of the bins. LEDs must be obtained from no more than two (2) consecutive luminous intensity "bins" as defined by the LED manufacturer.

The various LED color and intensity bins must be distributed evenly throughout the sign and must be consistent from pixel to pixel. Random distribution of the LED bins will not be accepted.

The LED manufacturer must assure color uniformity and consistency on the LED display face within the 30 degree cone of vision. Inconsistent color shifts or intensity will be cause for rejection.

The sign board must automatically adjust the LEDs' intensity to be dimmer or brighter for optimum viewing as natural ambient light conditions change. And must include a manual override function in the control system.

10. Pixels

Each light emitting pixel of an LED display must consist of a cluster of closely spaced LEDs. LED pixels must conform to the following requirements:

Pixels must be constructed with strings of LEDs. Each amber pixel must consist of the minimum number of LEDs per pixel determined by the VMS manufacturer to meet the minimum optical requirements and redundancy requirements of the NEMA

TS4 standard. LED power supply redundancy requirements must comply with Section “Power Supplies” herein.

Each color pixel must consist of a minimum of one LED for each color (Red, Green, Blue) LED power supply redundancy requirements must comply with Section “Power Supplies” herein.

Each pixel must illuminate a minimum of 33 candelas (for Type I) or 40 candelas (for Type II) with no more than 50% reduction in intensity at 15 degrees from center viewing angles. The average illumination of the display must be determined by measuring the display intensity within a square meter of display area. The intensity must be a minimum of 7,000 candelas per square meter for amber signs, measured through the polycarbonate display face sheeting and determined from three measurements taken for the furnished display/sign.

Where multiple strings are employed, the failure of an LED within one string of a pixel must not affect the LED(s) in any other string or pixel.

Drive current must be within the manufacturer’s specifications to provide the overall sign intensity as specified herein.

All LEDs used in a sign must be from one luminous intensity bin from which the dimmest LED does not emit less than 70% of the luminous intensity of the brightest LED when driven with identical currents.

Pixels must be driven with direct-drive pulse width modulation. Maximum pulse amplitude must not exceed 30 mA, and must be adjustable in 1mA increments.

Materials used in the fabrication of LED clusters must contain UV light inhibitor and must be designed for direct exposure to sunlight.

Each LED pixel must be operated over the environmental range defined herein.

LED pixels must be mounted perpendicular to the display panel.

All full color LED pixels provided for the manufacture of VMS must conform to the following requirements in addition to those above:

Each pixel must contain the quantity of discrete LEDs needed to output white colored light at a minimum luminous intensity of 12,000 candelas per square meter when measured using a photometric meter through the VMS front face panel assembly.

Each pixel must also be capable of displaying amber colored light with a minimum luminous intensity of 7,000 candelas per square meter when measured using a photometric meter through the VMS front face panel assembly.

Pixels modules must be replaceable from outside of the enclosures for non-walk-in sign enclosures without the use of tools. Display modules must be interchangeable between signs employing the same display technology and pixel pitch furnished by a VMS manufacturer.

The number of pixels making up the character width must vary by character and must be in accordance with the characters described herein but the number of characters per line must be based on the default font sizes.

11. Serviceable Parts

LED driver boards must be quickly replaceable and hot swappable within the sign housings for all signs. Plug-in locking connectors must be provided on each pixel driver board for all connections.

Connectors must be held in place with positive retaining latches. Spring clips, screws or any connector requiring tools to engage/disengage must not be used. Driver boards must be easily removable for service/replacement with simple hand tools.

Driver boards and all electronic circuit boards installed in the sign housing must be thoroughly coated with an acrylic or urethane conformal coating for enhanced moisture resistance.

12. Multiple Sign Control Maintenance Positions

The VMS controller operation must be accessible from both the ground (or pole) mounted VMS Signal controller and also from inside the VMS sign case, through a remote control panel / local communication port, mounted within in the VMS sign case, for maintenance. If a separate remote control panel is not deployed, a laptop computer interface, provided by others, must be Ethernet RJ-45 or Fiber Optic based. The activation and use of the remote sign control facilities must not require disconnection of the normal communication service between the ground (or pole) mounted VMS sign controller and the VMS sign case connections or removal of any equipment.

The VMS must be provided with the necessary hardware and software to support the ITS Network and Local Network interfaces to the ground (or pole mounted) VMS Signal cabinet, and the in-sign case interface/remote. The VMS sign control panel (ITS Signal ground cabinet mounted) or an Ethernet interface (located in the VMS sign case) must have the same capabilities as a maintenance laptop computer connected to the local port of the ground or pole mount VMS controller and must be used for field maintenance.

13. VMS Controller

General

Each sign must include a VMS sign controller which must be installed in a ground mounted ITS controller cabinet (or pole mounted cabinet) FURNISHED as part of another pay item.

Provide One (1) Licensed copy of the VMS Software compatible with the Department's laptop computer, the laptop to VMS controller cables and any other material equipment needed to program the VMS controllers.

Provide a maintenance technician interface to the VMS controller installed in the ground mounted ITS Signal cabinet. A sign case remote connection must also be provided by the VMS manufacturer and must be retained by the Department.

VMS Sign Controllers must be installed to operate over the single mode, ITS fiber-based communication system between the Central Control (e.g. NYCDOT RTMC) facility and the VMS sign locations.

Provide communications ability to operate with alternate communication media, include at minimum:

- 10/100 Ethernet over SM ITS fiber and/or Cat 6 copper through an industrial duty managed ethernet switch supporting secure layer 2 and layer 3 network communications (NYCDOT ITS SM FIBER IS THE PREFERRED MEDIA)
- Dedicated DSL or dial-up telephone lines include a RS-232 interface modem
- Wireless or Cellular modems
- Short haul microwave

Communications interfaces must be configured per the Department's local / regional office IP and serial addressing requirements.

Contractor must coordinate with the Design Engineer, the Department's Signals technical staff and the Department's existing ITS System Integrator to obtain site-specific parameters and assure point to point communications are integrated and tested.

VMS Controllers must be a microprocessor based intelligent unit, capable of controlling and monitoring all of the variable message signs and associated functions described in the Contract.

Controllers must be integral units with their own power supplies. Controllers must be housed in durably fabricated aluminum enclosures. The controller's volume and power supplies must not exceed two cubic feet and must be shelf type.

VMS Sign Controllers must be 19-inch EIA rack mountable.

Memory – VMS Controllers must have both permanent and changeable memory. Permanent memory must be in the form of plug-in EEPROM integrated circuits, or an approved equivalent flash memory technology, and must contain the operating system/application software/firmware.

Changeable controller memory must be in the form of NVRAM integrated circuits (or other approved backup) that retains the data in memory for a minimum of one year following a power failure. Changeable memory must contain all of the changeable operating parameters including the set-able data defined by the NTCIP V01 and V02.35 requirements.

14. Data Transmission Requirements

Data Ports - Each VMS controller must have a minimum of: one 10/100 Ethernet technician local support port, one 10/100 Ethernet Central Control, one EIA-232 serial communication control port, one TIA/EIA-232E communication technician support port and one 10/100 Ethernet (fiber) or dedicated data over RS-485 to the sign case interface port.

Each of these ports must be permanently labeled: Local Ethernet, Central Ethernet, Local RS-232 and Sign Data.

The maintenance technician local ports must be located on the front of the controller easily accessible and quickly identifiable for the maintenance technician’s use.

The RS-232 port must be capable of operation at all industry standard speeds up to 115Kbps and must support all of the Subnet Profiles defined in NTCIP Requirements herein.

A maintenance technician must be able to directly connect a laptop computer to the identified LOCAL ports via a direct Ethernet or serial cable and carry out all central computer "CENTRAL" port operations.

The controller must meet all other communication requirements, such as checksum and parity, specified by NTCIP standards.

All data ports must be permanently labeled.

VMS Controller Addressing - A configurable IP Network Address must be assigned to each controller. The Contractor and the Sign Manufacturer’s technicians must in coordination with the Design Engineer, the Department’s Signal technical staff and a VMS communications representative in the Regional Traffic Management Center assure the VMS controllers are addressed per the approved project IP network schema.

Clock - The VMS controller must contain a computer-readable time-of-year clock with a lithium battery or other equivalent backup. Back up must keep the clock operating properly for at least 10 years without external power. The clock must automatically adjust for daylight saving time and leap year through upgradeable software. The clock must be set by the sign controller's microprocessor and must be accurate to within 1 minute per month.

Local Interface Functions - The controller must support a local user interface that allows the maintenance technician to perform VMS configuration, maintenance/diagnostics and repair activities as well as compose, display, and blank messages through a laptop connected to one of two local ground/pole mount controller ports, or the interface panel internal to the sign case or sign case local port that will accommodate a laptop computer. The local user interface must allow display of the available display test patterns on the sign, blank the current message and perform

available canned tests (pixel, power supply, etc.). The display of other messages or VMS configuration changes must require an optional password. The default password must be coordinated/selected by the Department. The password must not be echoed on the operator interface when entered by the user. Controllers must be initially shipped with the default password selected by the Department. The sign controller must store a minimum of three (3) user configurable passwords.

Controller Software - The VMS controller software must support NTCIP V02.35 and must be backward compatible with the Department's current Version 1 of the NTCIP communication protocol and the functions and features contained within the Department's existing RTMC central control software. Local controllers must be configurable by the user to define the number of LED display elements (pixels) to fail either in an "Off" or "On" state before the controller blanks the sign.

Display Presentation - The VMS sign controller must control the driver modules to create the desired displays on the sign. At a minimum, the signs must be able to display the characters as described in the respective NTCIP supported protocols. Space allocated to each character must be proportional to the character's true width and a non-proportional spacing as commanded by the supported character fonts.

Display Selection - The controller must implement the display, per the logic defined in the VMS Messages – VMS messages must be programmable by users from a local user interface device as well as from remote locations by a computer running vendor-furnished VMS application software such as Vanguard®.

15. Dimming System

Each VMS must be provided with a VMS display intensity control system. The system must contain a minimum of three VMS sign case installed photo-electric sensors to measure light levels striking the sensor and report the levels within 255 increments to the display control system. The sensors must be positioned so that one sensor must monitor the light levels on the front of the VMS, a second sensor must monitor the light striking the back of the VMS and a third sensor must monitor the light striking the top of the VMS (Ambient light).

The intensity levels reported to the VMS control system must be processed so that the highest light level sensed must be considered the controlling level and must be compared against a table containing a minimum of 160 configurable intensity levels.

The intensity levels must be configurable from the local or the central control points.

Each intensity level must consist of an entry and exit value that allows the overlapping of levels to prevent display fluctuation with minor ambient light changes and flickering of the display during intensity level changes.

The dimming system must conform to the following requirements:

The photocells must be enclosed within the sign case with transparent covered windows that allow light to pass from the exterior of the sign case to the surface of the photocell. The photocell must be vibration and temperature extreme hardened to withstand NEMA TS-4 Environmental conditions for the life of the VMS. The sensors must be capable of being continually exposed to direct sunlight without impairment of performance.

The sensors must be immune to transient voltages and vibration. The connections to the sensor must be through solder connection plugs and sockets with interlocking latches. The wiring must be tinned, stranded copper conductors in shielded cables with electrical noise protection.

Dimming Levels - Manual and automatic dimming modes must be provided enabling the user to select the desired mode of operation. The dimming system must be capable of selecting a minimum of 160 levels from the sensed ambient light table containing values from 0 to 255 light levels in increments of 10. The set points for each of the ambient light levels must be set by user adjustable software.

Interference - The dimming circuit and sign power system must have electrical devices installed to minimize RFI noise generated by the sign both on the power line and radiated by sign circuitry.

Temperature Limit - A configuration table must be provided that allows the definition of internal VMS sign case temperatures and a corresponding reduction in display intensity in concert with the fan forced ventilation to prevent an over temperature from damaging the LED display. It must be assumed that the primary fans are operating, and the temperature is rising to or above the first high temp threshold. A high temperature table must be configurable and logic provided to reduce the power applied to the pixels upon meeting pre-configured temperatures. The table must match a power level to a threshold temperature and reduce the power to the pixels to the next power level or a percentage of the power level commanded.

Upon reduction of the temperature below the current reduction level the logic must increase the power to the LEDs consistent with the pre-configured threshold. In cases where the thermal calculation indicates that a primary and secondary fan system is warranted, the primary fans must start as the initial reaction to reaching the threshold temperature. If temperatures rise to the next threshold, the secondary fans must start.

Whenever internal VMS sign temperature continues to increase beyond the programmed safety limit, the sign controller must issue reduction in power applied to the pixels. This power reduction process must be repeated until the temperature fails to increase beyond the threshold established for the power applied or the display is turned off completely. The configuration table must provide limits that are constrained within those operable limits defined by the sign manufacturer’s specifications.

In conformance with the NTCIP communication protocols, over temperature alarms/alerts and display status reports must be provided to the RTMC and/or the local connection.

16. Diagnostics and System Failures

Failure Reports - The sign controller must detect VMS status reports and have them available from a poll from central RTMC or the Local Connection. Sensors must be provided in the VMS controller hardware and firmware that must detect abnormal or current status data. Data acquired by the VMS controller must be provided to the central system.

Diagnostic Tests - Upon command from a remote computer, the controller must test the electrical operation of all drivers and the over current, under current and normal current of the pixels. The field controller must analyze the pixel current and determine whether the pixel is operating with "normal", "under", or "over" current and must communicate the results using standard NTCIP data objects.

Power Interruptions - The contents of the controller's memory must be preserved by backup power during power interruptions and the controller must resume operation automatically when power is restored. Upon recovering from a power interruption, the controller must report to the central computer that it has recovered from a power-interruption.

17. VMS Software Rights

The VMS Manufacturer must provide a non-assignable software use license in support of the VMS on an exclusive perpetual basis.

The Contractor must provide documentation to the Engineer of any incompatibility identified between the central control software and the VMS firmware/software to the level that a resolution plan may be formulated.

It is anticipated that there may be minor incompatibilities between the VMS manufacturers' NTCIP V02.35 implementation and that of the City's NTCIP V02.35 central implementation.

The Manufacturer's VMS software must be made compatible with the City's NTCIP V02.35 or higher version central RTMC control implementation, at no additional cost to the City.

The VMS controller manufacturer must provide (1) licensed copy of the controller software (Vanguard or engineer approved equivalent) with each VMS sign controller furnished for this project. The software must be the latest published edition and must be backwards compatible with other software V02.35 or higher instances in use at the RTMC Server location.

18. Communication Requirements

The interfaces between the ITS controller cabinet and the VMS sign case must support fiber connection media (or other media types as approved by the Engineer), other existing media types and media as defined in the VMS hardware requirements herein.

The communication requirements must be in conformance with the City's most recent implemented NTCIP V01 (or higher) communication protocol and the NTCIP V02.35 communications protocol. The NTCIP V02.35 must be downward compatible with the Department's NTCIP V01 communication protocol.

Communications Protocol - Each NTCIP Component covered by these project specifications must implement the most recent version of the standard that is at the stage of Recommended (or higher) as of the date of the Contract Notice to Proceed, (NTP) including any and all Approved or Recommended Amendments to these standards as of the NTP date. It is the ultimate responsibility of the sign manufacturer to monitor NTCIP activities to discover and confirm any more recent NTCIP national standard documents.

NTCIP – Each Variable Message Sign assembly and communications controller must be compliant with the latest version of the NTCIP Standards, as defined by AASHTO, ITE, and NEMA.

19. Subnetwork Profiles

Each serial or modem port on each NTCIP device must be configurable to support both NTCIP 2101 and NTCIP 2103. Only one of these profiles must be active at any given time. Serial ports must support external dial-up, leased line, radio, cellular and fiber optic modems.

Each Ethernet port on the NTCIP device must comply with NTCIP 2104 protocol.

The NTCIP device(s) may support additional Subnet Profiles at the manufacturer's option. At any one time, only one subnet profile must be active on a given port of the NTCIP device. All response datagram packets must use the same transport profile used in the request. The NTCIP device must be configurable to allow a field technician to activate the desired subnet profile and must provide a visual indication of the currently selected subnet profile.

20. Transport Profiles

Each serial or modem port, on each NTCIP device, must be configurable to support both NTCIP 2201 and NTCIP 2202.

Each Ethernet port on the NTCIP device must comply with NTCIP 2202.

The NTCIP device(s) may support additional transport profiles at the manufacturer's option. Response datagrams must use the same transport profile used in the request. Each NTCIP device must support the receipt of datagrams conforming to any of the supported transport profiles at any time.

21. Application Profiles

Each NTCIP device must comply with NTCIP 2301 and must meet the requirements for Conformance Level.

An NTCIP device may support additional application profiles at the manufacturer's option. Responses must use the same application profile used by the request. Each NTCIP device must support the receipt of application data packets at any time allowed by the subject standards.

The following conformance groups within the NTCIP 1203:1997 and Amendment 1 standard must be supported with the values defined in these tables. For the purposes of this specification NTCIP 1203 Conformance Statements must be considered mandatory, except where noted.

Each NTCIP device must support all mandatory objects in all optional conformance groups that are required herein. All optional objects listed in these specifications as mandatory, must be supported.

VMS CONFORMANCE STATEMENTS

Conformance Group	Reference	Conformance Requirement
Configuration	NTCIP 1201:1996	Mandatory
Time Management	NTCIP 1201:1996	Mandatory
Timebase Event Schedule	NTCIP 1201:1996	Mandatory
Report	NTCIP 1201:1996	Mandatory
STMF	NTCIP 1201:1996	Optional
PMPP	NTCIP 1201:1996	Mandatory
Sign Configuration	NTCIP 1203:1997	Mandatory
GUI Appearance	NTCIP 1203:1997	Optional
Font Configuration	NTCIP 1203:1997	Mandatory
VMS Sign Configuration	NTCIP 1203:1997	Mandatory
MULTI Configuration	NTCIP 1203:1997	Mandatory
Message Table	NTCIP 1203:1997	Mandatory
Sign Control	NTCIP 1203:1997	Mandatory
Default Message Control	NTCIP 1203:1997	Optional
Pixel Service Control	NTCIP 1203:1997	Optional

Conformance Group	Reference	Conformance Requirement
MULTI Error Control	NTCIP 1203:1997	Mandatory
Illumination/Brightness Control	NTCIP 1203:1997	Mandatory
Scheduling	NTCIP 1203:1997	Mandatory
Auxiliary I/O	NTCIP 1203:1997	Mandatory
Sign Status	NTCIP 1203:1997	Mandatory
Status Error	NTCIP 1203:1997	Mandatory
Pixel Error Status	NTCIP 1203:1997	Mandatory
Fan Error Status	NTCIP 1203:1997	Mandatory
Power Status	NTCIP 1203:1997	Mandatory
Temperature Status	NTCIP 1203:1997	Mandatory

SIGN CONFIGURATION CONFORMANCE GROUP

MIB	Object Or Table Name	NTCIP Reference	NYSDOT Spec. Reference	Expected Value
2.2.1.1.1.2	dmsSignType	NTCIP 1203:1997	2	6
2.2.1.1.1.8	dmsBeaconType	NTCIP 1203:1997	-	2

FONT CONFIGURATION CONFORMANCE GROUP

MIB	Object Or Table Name	NTCIP Reference	NYSDOT Spec Reference	Expected Value
2.4.1.1.1.1	numFonts	NTCIP 1203:1997	-	8..255
2.4.1.1.1.2	fontTable	NTCIP 1203:1997	-	Sequence
2.4.1.1.1.3	maxFontCharacters	NTCIP 1203:1997	-	1..65535
2.4.1.1.1.4	characterTable	NTCIP 1203:1997	-	Sequence

VMS SIGN CONFIGURATION CONFORMANCE GROUP

MIB	Object Or Table Name	NTCIP Reference	NYSDOT Spec Reference	Expected Value
2.3.1.1.1.1	vmsCharacterHeightPixels	NTCIP 1203:1997	2	0
2.3.1.1.1.2	vmsCharacterWidthPixels	NTCIP 1203:1997	2	0
2.3.1.1.1.3	vmsSignHeightPixels	NTCIP 1203:1997	2	27..65535
2.3.1.1.1.4	vmsSignWidthPixels	NTCIP 1203:1997	2	120..65535
2.3.1.1.1.5	vmsHorizontalPitch	NTCIP 1203:1997	2.4	0..68
2.3.1.1.1.6	vmsVerticalPitch	NTCIP 1203:1997	2.4	0..68

MULTI CONFIGURATION CONFORMANCE GROUP

MIB	Object Or Table Name	NTCIP Reference	NYSDOT Spec Reference	Expected Value
2.5.1.1.1.1	defaultBackgroundColor	NTCIP 1203:1997	3.37	0
2.5.1.1.1.2	defaultForegroundColor	NTCIP 1203:1997	2.9, 2.19	9
2.5.1.1.1.3	defaultFlashOn	NTCIP 1203:1997	-	1..99
2.5.1.1.1.4	defaultFlashOff	NTCIP 1203:1997	-	1..99
2.5.1.1.1.5	defaultFont	NTCIP 1203:1997	-	1..255
2.5.1.1.1.6	defaultJustificationLine	NTCIP 1203:1997	-	1..5
2.5.1.1.1.7	defaultJustificationPage	NTCIP 1203:1997	-	1..4
2.5.1.1.1.8	defaultPageOnTime	NTCIP 1203:1997	-	1..255
2.5.1.1.1.9	defaultPageOffTime	NTCIP 1203:1997	-	0..255
2.5.1.1.1.10	defaultCharacterSet	NTCIP 1203:1997	-	1,2

MESSAGE TABLE CONFORMANCE GROUP

MIB	Object Or Table Name	NTCIP Reference	NYSDOT Spec Reference	Expected Value
2.6.1.1.1.1	dmsNumPermanentMsg	NTCIP 1203:1997	-	0..65535
2.6.1.1.1.2	dmsNumChangeableMsg	NTCIP 1203:1997	-	0..65535
2.6.1.1.1.3	dmsMaxChangeableMsg	NTCIP 1203:1997	-	128..65535
2.6.1.1.1.4	dmsFreeChangeableMemory	NTCIP 1203:1997	-	0..4294967295

2.6.1.1.1.5	dmsNumVolatileMsg	NTCIP 1203:1997	-	0..65535
2.6.1.1.1.6	dmsMaxVolatileMsg	NTCIP 1203:1997	-	0..65535
2.6.1.1.1.7	dmsFreeVolatileMemory	NTCIP 1203:1997	-	0..4294967295
2.6.1.1.1.8	dmsMessageTable	NTCIP 1203:1997		Sequence
2.6.1.1.2	dmsValidateMessageError	NTCIP 1203:1997	-	1..5

SIGN CONTROL CONFORMANCE GROUP

MIB	Object Or Table Name	NTCIP Reference	NYSDOT Spec Reference	Expected Value
2.7.1.1.1.1	dmsControlMode	NTCIP 1203:1997	4	1..6
2.7.1.1.1.2	dmsSWReset	NTCIP 1203:1997	-	0..1
2.7.1.1.1.3	dmsActivateMessage	NTCIP 1203:1997		Code
2.7.1.1.1.4	dmsMessageTimeRemaining	NTCIP 1203:1997	-	0.65535
2.7.1.1.1.5	dmsMsgTableSource	NTCIP 1203:1997	-	Code
2.7.1.1.1.6	dmsMsgRequesterID	NTCIP 1203:1997	-	IP Address
2.7.1.1.1.7	dmsMsgSourceMode	NTCIP 1203:1997	-	1..14
2.7.1.1.1.16	dmsMemoryMgmt	NTCIP 1203:1997	-	1..4
2.7.1.1.1.17	dmsActivateMsgError	NTCIP 1203:1997	-	1..9

MULTI ERROR CONFORMANCE GROUP

MIB	Object Or Table Name	NTCIP Reference	NYSDOT Spec Reference	Expected Value
2.7.1.1.1.18	dmsMultiSyntaxError	NTCIP 1203:1997	-	1..12
2.7.1.1.1.19	dmsMultiSyntaxErrorPosition	NTCIP 1203:1997	-	0..65535
2.7.1.1.1.20	dmsMultiOtherErrorDescription	NTCIP 1203:1997	-	0..50

ILLUMINATION/BRIGHTNESS CONFORMANCE GROUP

MIB	Object Or Table Name	NTCIP Reference	NYSDOT Spec Reference	Expected Value
2.8.1.1.1.	dmsIllumControl	NTCIP 1203:1997	8.1	1..4
2.8.1.1.1.	dmsIllumMaxPhotocellLevel	NTCIP 1203:1997	8.3	0..65535
2.8.1.1.1.	dmsIllumPhotocellLevelStatus	NTCIP 1203:1997	8.4	0..65535
2.8.1.1.1.	dmsIllumNumBrightLevels	NTCIP 1203:1997	8.3	0..255
2.8.1.1.1.	dmsIllumBrightLevelStatus	NTCIP 1203:1997	8.3	0..255
2.8.1.1.1.	dmsIllumManLevel	NTCIP 1203:1997	8.3	0..255
2.8.1.1.1.7	dmsIllumBrightnessValues	NTCIP 1203:1997	8.4	Octet String
2.8.1.1.1.8	dmsIllumBrightnessValuesError	NTCIP 1203:1997	-	1..6
2.8.1.1.1.9	dmsIllumLightOutputStatus	NTCIP 1203:1997	8.4	0.65535

SCHEDULING CONFORMANCE GROUP

MIB	Object Or Table Name	NTCIP Reference	NYSDOT Spec Reference	Expected Value
2.4.3.1	maxTimeBaseScheduleEntries	NTCIP 1201:1996	-	0..65535
2.4.3.2	timebaseScheduleTable	NTCIP 1201:1996	-	Sequence
2.4.4.2	maxDayPlanEvents	NTCIP 1201:1996	-	1..255
2.4.4.3	timeBaseDayPlanTable	NTCIP 1201:1996	-	Sequence
2.4.4.4	dayPlanStatus	NTCIP 1201:1996	-	0..255
2.9.1.1.1.1	numActionTableEntries	NTCIP 1203:1997	-	0..255
2.9.1.1.1.2	dmsActionTable	NTCIP 1203:1997	-	Sequence

SIGN STATUS CONFORMANCE GROUP

MIB	Object Or Table Name	NTCIP Reference	NYSDOT Spec Reference	Expected Value
2.11.1.1.1.1	statMultiFieldRows	NTCIP 1203:1997	-	0..255
2.11.1.1.1.2	statMultiFieldTable	NTCIP 1203:1997	-	Sequence

2.11.1.1.1.5	watchdogFailureCount	NTCIP 1203:1997	4.12	Counter
2.11.1.1.1.6	dmsStatDoorOpen	NTCIP 1203:1997	3.17, 4.29.3	0..255

STATUS ERROR SUBCONFORMANCE GROUP

MIB	Object Or Table Name	NTCIP Reference	NYSDOT Spec Reference	Expected Value
2.11.2.1.1.1	shortErrorStatus	NTCIP 1203:1997	-	0..65535
2.11.2.1.1.10	controllerErrorStatus	NTCIP 1203:1997	-	0..255

PIXEL ERROR STATUS SUBCONFORMANCE GROUP

MIB	Object Or Table Name	NTCIP Reference	NYSDOT Spec Reference	Expected Value
2.11.2.1.1.2	pixelFailureTableNumRows	NTCIP 1203:1997	-	0..65535
2.11.2.1.1.3	pixelFailureTable	NTCIP 1203:1997	-	Sequence
2.11.2.1.1.4	pixelTestActivation	NTCIP 1203:1997	4.22.2	1..4

LAMP ERROR STATUS SUBCONFORMANCE GROUP

MIB	Object Or Table Name	NTCIP Reference	NYSDOT Spec Reference	Expected Value
2.11.2.1.1.5	lampFailureStuckOn	NTCIP 1203:1997	-	0..255
2.11.2.1.1.6	lampFailureStuckOff	NTCIP 1203:1997	-	0-255
2.11.2.1.1.7	lampTestActivation	NTCIP 1203:1997	-	1..3

MULTI Tags - Each NTCIP device must support the following message formatting MULTI tags. The manufacturer may choose to support additional standard or manufacturer-specific MULTI tags.

MULTI Tag	Description
f1	Field 1-time (12 hr)
f2	Field 1-time (24 hr)
f8	Field 8- day of month

MULTI Tag	Description
f9	Field 9-month
f10	Field 10-2 digit year
f11	Field 11-4 digit year
fl (and /fl)	Flashing text on a line-by-line basis with flash rates controllable in 0.1-second increments.
Fo	Font
jl2	Justification- line-left
jl3	Justification- line-center
jl4	Justification- line- right
jp2	Justification- page- top
jp3	Justification- page- middle
jp4	Justification- page- bottom
mv	Moving text
nl	New line
np	New page up to 5 instances in a message (i.e. up to 6 pages/frame in a message counting first page)
pt	Page times controllable in 0.1-second increments

22. Documentation

NTCIP documentation must be provided on a CD-RW OR DVD-R ROM media and must contain ASCII versions of the following Management Information Base (MIB) files in Abstract Syntax Notation 1 (ASN.1) format:

The relevant version of each official standard MIB modules referenced by the device functionality.

If the device does not support the full range of any given object within a standard MIB Module, a manufacturer specific version of the official standard MIB Module with the supported range indicated in ASN.1 format in the SYNTAX and/or DESCRIPTION fields of the associated OBJECT TYPE macro. The filename of this file must be identical to the standard MIB Module except that it will have the extension ".man".

A MIB module in ASN.1 format containing any and all manufacturer specific objects supported by the device with accurate and meaningful DESCRIPTION fields and supported ranges indicated in the SYNTAX field of the OBJECT-TYPE macros.

A MIB containing any other objects supported by the device.

Manuals – INSTALLATION, Operation and Maintenance Manuals (IOM) that detail the operation of the system must be furnished as part of the VMS System.

User Manuals must be provided for each system component - The User Manuals must fully identify the system's, or the component's, features and functions and give detailed step-by-step instructions on how to operate and adjust the system or component and how to respond to system or component failures.

Operations Manuals must be provided and must, as a minimum, include:

Detailed description of normal system operation.

Detailed description of VMS sign control software operation and procedures. The manuals must clearly describe all functions supported by the sign control software. The software operations manual must be written for beginner personal computer users who are not familiar with detailed computer operations and terms. It must contain step-by-step procedures with examples containing pictures of the computer screens.

Error and alarm handling procedures, including recovery from communications failures.

System start-up and shutdown procedures.

Detailed procedures on how to create, save, transmit and display messages, including all graphic features, back-up and restore message libraries, sign configurations, error and event logs.

The sections covering system administration features such as password management, setting access levels, installing, backing-up and restoring the sign control software must be contained in a separate "System Administration Operations Manual."

Detailed Maintenance Manuals must be provided and must, as a minimum, include:

Maintenance Manuals must provide diagnostic routines for trouble shooting the system from the system computer and from each sign location. The manuals must contain theory of operation, specifications, installation instructions, mechanical details, detailed alignment procedures, schematic drawings, photographs or drawings detailing component layouts, parts lists, including manufacturer's part numbers, and troubleshooting procedures for repair/replacement of all component parts, including printed circuit board replacement.

The Maintenance Manuals must include, but not be limited to:

All the requirements for the User and Operations manuals.

Detailed description of procedures for modifying the LED VMS, sign controller and sign control software configuration settings.

Description of operating procedures and troubleshooting procedures for each subsystem. This must include step-by-step field and bench troubleshooting procedures to isolate and repair faults, as well as normal waveforms and test voltages.

System message and configuration editing back-up and restore procedures, including procedures for changing any messages stored in non-volatile memory. Hard copy listing for all non-volatile or similar memory devices used in the equipment. The Contractor must also supply complete instructions for the hardware and software equipment that must enable NYCDOT to change, add and delete messages stored in non-volatile memory.

The Contractor must provide “As Installed” color-coded interconnection wiring diagrams (IWD), for both "factory" and "field." VMS Equipment wiring and all circuit board schematic diagrams indicating "factory" and "field" wiring. This must include drawings showing the physical location of each component, as well as logic diagrams and stage-by-stage explanation of the circuit theory for each circuit board.

Provide complete nomenclature and commercial manufacturer and part numbers of all replacement parts, including current prices, listing of spare parts initially provided, and a second source of supply where applicable, cross-referenced as to component designation.

Each manufacturer's product data sheet must be annotated to clearly identify product or part.

Each product manufacturer's printed operating and maintenance instructions.

Provide list(s) of recommended cleaning agents, maintenance procedures and schedules.

Provide list(s) of recommended test and service equipment, including manufacturer's name, address, and model number.

Three (3) copies of each IOM manual must be furnished with each VMS. The IOM manuals are in addition to the system training manuals required to be provided during formal orientation courses for City staff. All manuals of each type must be identical and must be printed bound originals, not reproduced photo copies.

Options and components identified in any manual, which are not furnished with the VMS System supplied, must be redacted or marked "NOT USED".

The IOM manuals must consist of sturdy, white hard cover, 3 ring binder with clear removable title sheet and spline covers. The IOM must include a printed table of contents, reinforced, printed tabbed dividers and an index section.

The IOM manuals must be provided with a table of contents clearly itemizing the catalog.

Software Documentation - For all custom application software necessary to operate the VMS, the Contractor must provide NYCDOT with the software source code, and compiler necessary to compile it. The Contractor must also demonstrate the compiling, linking, and loading of the source code as part of this test.

23. Acceptance Testing – Factory Acceptance (FAT)

The factory acceptance test will use the NTCIP Exerciser, Trevilon’s N-Tester, Intelligent Devices’ Device Tester for NTCIP, or other testing tools, approved by the Engineer. If the manufacturer implements any vendor-specific Multi tags, the VMS system must provide meaningful error messages formatted within the NTCIP Standard DMS MIB 2.7.1.1.1.20 DMS MULTI OTHER ERROR DESCRIPTION whenever one of these tags generates an error.

The VMS manufacturer must prepare and submit a detailed, NTCIP based, factory acceptance test plan (FAT) to the Engineer for approval, a minimum of Ninety (90) days prior to scheduling NTCIP acceptance testing.

NTCIP acceptance testing will be performed at one of the VMS manufacture factory test locations, under this contract. Testing will be performed at the VMS manufacturer’s or an Engineer approved test agency’s facility. There must be no additional cost to the City, should the Engineer elect to have the Engineer and/or Engineer’s staff, witness the sign manufacturer’s FAT testing.

Specification or Standards Interpretation Resolution - If the Engineer or VMS manufacturer discovers an ambiguous statement in these specifications or in the standards referenced by this procurement specification, the issue must be submitted to the Engineer, the VMS manufacturer or the NTCIP DMS Working Group for resolution. If the DMS Working Group fails to respond

within 90 days, the Engineer must provide an interpretation of the specification for use on the project.

24. Commissioning & Testing

Factory Design Approval Tests (FAT) - The Factory Design Approval Test must be performed on complete VMS sign assemblies. While performing these tests, a test set must be used to issue commands to the VMS sign controller, to verify that each sign remains operational throughout the test.

The following tests must be performed as part of the design approval test, in addition to those specified in the General Requirements:

Power variation: Test the sign with the line voltage at the maximum, minimum and nominal specified values. Using a power interruption meter, at each of these voltages interrupt the power for 0.1 sec five times. Repeat test for a 0.5 second interruption and for a single 1 second interruption.

Transient immunity: Using a calibrated transient generator, set to the following conditions:

Amplitude: 300 volts +5 percent, positive and negative polarity

Peak power: 5000 watts

Repetition: One pulse every other cycle moving uniformly over the full wave in order to sweep once every 3 seconds across 360 degrees of line cycle.

Pulse rise time: 500 ns.

Power line surge: Discharge a 25 uF capacitor charged to plus and minus 2000 volts applied directly across the incoming AC line at a rate of once every 10 seconds. Perform the test 10 times for each polarity. The unit must be operated at 120 ± 12 VAC.

Temperature: All functional operations of the VMS equipment must be successfully performed under the following conditions and in the order specified below:

The equipment must be stabilized at 0 degrees Celsius. After stabilization at this temperature, the equipment must be operated without degradation for two (2) hours.

The equipment must be stabilized at 62 degrees Celsius. After stabilization, the equipment must be operated without degradation for two (2) hours.

The equipment must be subjected to temperature shock of 17 degrees Celsius per hour, during which time the relative humidity must not exceed 95%. The equipment must be operated without failure during and after the temperature shock.

Relative Humidity: All equipment must meet its performance requirements when subjected to temperature and relative humidity of 43 degrees Celsius and 95%, respectively. The equipment must be maintained at this condition for 48 hours. At the conclusion of the soak, within 30 minutes, the equipment must meet all of its operational requirements.

Vibration: The VMS equipment must show no degradation of mechanical structure, soldered components, plug-in components or satisfactory operations in accordance with the manufacturer's specification after being subjected to the following vibration test:

The equipment must be secured to the head of suitable electro-mechanical shaker in the vertical, lateral, and longitudinal planes, respectively.

The object of the test is to vibrate the equipment in each of the three (3) mutually perpendicular axes, in accordance with the following parameters:

Amplitude:	2.0 mm "Double Amplitude" (peak to peak)
Linear Acceleration (g's):	5 maximum
Linear Velocity;	Approx. 190 mm/s
Frequency:	40 Hz
Duration:	Five (5) minute dwell in each axis

If the VMS equipment fails any design approval test, the design fault must be corrected and the entire design approval test must be repeated.

All deliverable equipment must be modified, without additional cost to the NY City Department of Transportation, to include all design changes required to pass the design approval tests.

Factory Demonstration Tests

Immediately following Design Acceptance Testing and prior to shipping of any project VMS signs, the manufacturer must perform a factory demonstration test on each sign. Factory Demonstration Tests must test the full functionality of a matched set consisting of sign, sign controller, central control, VMS software, maintenance software and selected media communications between each component

Using a notebook computer, loaded with test software provided by the sign manufacturer, demonstrate the following connected to the input (remote) port of the VMS controller:

Exercising of all sign functions, as defined in this document.

Simulation common error and fault conditions to demonstrate the detection and reporting of the status conditions defined in this document. Including, but not limited to, open cabinet door(s), bad pixels, bad drivers, illegal message, and illegal character.

With the fiber optic communications interface installed, remotely operate the VMS sign, via a simulated IP communications network.

Demonstrate VMS operation through the local port of the sign controller.

Test Demonstrate compliance with the NTCIP specific standards to be implemented, applicable conformance groups, applicable data objects and their associated range values that are pertinent to the implementation of this specification.

Two (2) required VMS Test cases are included within this specification, the manufacturer must provide in writing a complete set test criteria and test scripts, to be submitted as part of the required test and commissioning plan submission for this section. The Factory Test cases must be submitted for approval with 120 days after the NTP.

Water Test - A water spray test must be performed to demonstrate that the enclosure meets the requirements of the NEMA 3R rating for the VMS housing. At the completion of the test, the Contractor and the Department must verify that the inside of the housing is dry. The water spray test is conducted at the manufacturer's facility, it must also be repeated, once each sign is rigged in place and the Contractor has completed the rough in of all conduits, supports and other sign case penetrations.

If any VMS fails any factory demonstration test, the fault(s) must be corrected and the entire factory demonstration test must be repeated. All deliverable equipment must be modified, without additional cost to the NYSDOT, to include any changes required to complete the factory demonstration tests to the satisfaction of the Design Engineer and/or the Department.

Pre-Installation Tests – VMS Prior to the rigging and erection of each VMS sign, the Contractor must also conduct a pre-installation VMS and operational test, at its facility or at a local indoor storage facility, approved by the Department. The Pre-Installation tests must be scheduled &

conducted by the Contractor, no more than Thirty (30) days prior to the date of each VMS sign being rigged into place.

The Contractor must include the on-site services of the VMS manufacturer's factory technical representative, who must conduct each of the field inspection and test programs.

On-Site tests must include a visual inspection of each sign to verify that the sign has not been damaged in shipment or storage. Conduct an inspection and a VMS pre-functional demonstration of the operation of each sign, using the manufacturer's sign test software.

Pre-Installation tests must be witnessed by the Resident Engineer and the Department.

Stand Alone Tests

Conductor Insulation, continuity and ground tests must be performed:

Continuity Test - each electrical circuit must be tested for continuity

Ground Resistance Test - all circuit grounding systems when completed in place must be measured to document a resistance to ground of not more than shown in the table below as determined in the following manner:

Temporary connect a 10 Amp load between the AC+ side of the equipment cabinet fuse and the ground system. It should be assured that the power company applied voltage is 120 VAC at the time of the test.

Disconnect the power company AC neutral from the ground system.

Connect the voltmeter between the power company AC neutral and the ground system

Controller Type	Voltmeter Reading (V)	Equivalent Resistance (Ohms)
2 Phase	20	2.0
Model 170	20	2.0
All others	20	2.0

If the voltmeter reading is higher than the appropriate voltage shown in the above table under 10 Amp load, the grounding system has an unacceptable resistance to ground. Additional grounding, including electrical bonding of underground metallic conduit, may be necessary in order to meet the requirements of this test.

Insulation Resistance Tests - insulation resistance tests, at 500 VDC for 1-minute durations must be made on each circuit, between each of the circuit conductors and ground. The insulation resistance must not be less than 10 mΩ on each circuit. The Contractor must take extra care to assure each conductor under test is lifted and not connected to any active components.

Site Acceptance Tests (SAT) - After installation and prior to integration of the VMS into the Department's ITS / RTMC system, the Contractor must perform an operational stand-alone SAT test on-site for each VMS sign & controller.

The SAT test, as a minimum, must demonstrate operation of each VMS sign using the test software running on a notebook computer (provided under a separate bid item). The VMS manufacturer's factory service technician must conduct the SAT tests, at each project location and must certify to the Department, all of the VMS equipment has been correctly installed,

wired, is fully commissioned and is ready for use in all aspects, based on the VMS performance tests

Using a notebook computer, loaded with test software provided by the sign manufacturer, the Contractor, with the manufacturer's technician on site, must demonstrate the following functions, while connected to the input (remote) port of the VMS ITS controller:

Exercising of all sign functions as defined by the approved Contract and a formal Testing – Commissioning plan, to be prepared and conducted by the VMS manufacturer.

Simulation of error and fault conditions to demonstrate the detection and reporting of the status conditions defined in this document and the approved test plan documents. Error tests must include, but are not limited to, open cabinet door, bad pixels, bad drivers, bad power supply, illegal message, loss if (remote) communications and illegal character.

With the notebook computer, loaded with the test software provided by the sign manufacturer, demonstrate operation through the local port of the sign controller.

Do not display any VMS test messages to traffic without prior written approval of the Department's RTMC regional traffic controller.

Continuous Operation Test (COT) - Each new VMS sign must be operated for thirty (30) consecutive days in an automated display test mode, that must continuously exercise the entire VMS display system. At the end of the thirty (30) day test period, operation of each sign, using the test software, must again be demonstrated to the City's RTMC operator(s). If any failure occurs during the COT period, the sign must be repaired or replaced by the manufacturer and another thirty (30) day COT test repeated. A scripted test pattern, must be submitted to and approved by the Design Engineer. Only NYCDOT approved sign messages and patterns must be displayed during the COT tests. COT test patterns must exercise all pixels in each display.

Remote Site Verification Test (RSAT) - The Contractor and the sign manufacturer's factory service technician(s) must conduct an end-to-end communications and performance test, for each VMS system. The tests must be scripted and designed to verify and demonstrate the remote operations of each VMS sign, by operating each from the Regional Traffic Monitoring Center (RTMC) The RSAT test must demonstrate Remote operations and status using the City's ITS Fiber communications network. Tests must operate each sign via their respective Fiber Managed switches and each VMS controller's Remote communication port. The Remote Site Verification Test (RSAT) must be scheduled to be conducted immediately following the successful test and acceptance of the COT tests, for each sign system.

Integrated System Acceptance Tests (IST) - Following the satisfactory completion of the Site Verification Tests (TMC), a complete system functional acceptance test must be performed. Testing must meet the requirements of the Contract documents and the sign manufacturer's field acceptance inspection and onsite testing requirements. At the successful completion of each sign's IST test, to the satisfaction of the Department, the system will be accepted, and the Manufacturer's warranty and the contractor's guaranty period must commence.

25. Test Software

Test software that will run on a notebook computer under the Windows 10 operating system designed to emulate the central software must be provided. This software must permit downloading and uploading of the commands and responses through the Ethernet, or the RS-232 port of the VMS controller. Three copies of the most recent released test software on CD-ROM or DVD-R media must be delivered to the Design Engineer.

26. Orientation

Upon completion of the work and at a scheduled time to be submitted to and approved by the Engineer, a program of formal orientation must be provided by a qualified instructor to City personnel.

A formal, written orientation plan must be submitted for approval along with a printed workbook type employee orientation manual, which must also be submitted for review and comment by the Engineer.

The orientation program must be designed to orientate City craft workers and supervisors in the proper operation and maintenance of the VMS equipment. City personnel must receive orientation comparable to the equipment manufacturer's factory training, provided orientation for each type of VMS equipment and software.

The minimum orientation must be: two (2) Eight (8) hour days of formal in classroom delivered orientation sessions on VMS software, configuration, VMS device remote (RTMC) and local operations.

Provide two additional (2) days of on-site (field) delivered sessions. Include the sign manufacturer’s hand on instruction on VMS equipment failure modes, site sign operation, configuration troubleshooting, VMS sign controller functions, common failure and service issues and VMS sign – control device maintenance and repairs.

27. Guarantees and Warranties

The VMS manufacturer must guarantee that all equipment including all parts thereof are of the first quality throughout and equipment provided complies in all respects or is fully equal to standards called for in the specification, and provide a guarantee certificate.

The Contractor must provide a warranty that all equipment, workmanship and all parts thereof, against any defects of workmanship, construction and materials, for a duration of Eighteen (18) months, beginning after the date of the Engineer’s acceptance of each sign’s RIST test.

A warranty certificate must be supplied for each component from the designated manufacturer’s field service director indicating the acceptance for warranty start and end dates of the major component warranties.

The guarantee certificate must name NYC DOT as the owner and the recipient of the services. NYC DOT must have the right to transfer this product and service to other private parties or governmental agencies who may be contracted to perform overall VMS systems oversight or maintenance.

METHOD OF MEASUREMENT:

This work will be measured as the number of LED FULL COLOR VARIABLE MESSAGE SIGN assembly satisfactorily furnished, installed, tested, and made fully operational in accordance with the plans, specifications and directions of the Engineer and the NYCDOT.

The unit price bid must include the cost of furnishing all labor, materials, orientation, commissioning, configurations and equipment necessary to satisfactorily complete the work.

BASIS OF PAYMENT:

The Unit price bid must also include the cost of all required labor, materials, equipment, commissioning and testing and incidental expenses required to furnish, install, integrate, align and demonstrate each LED FULL COLOR VARIABLE MESSAGE SIGN system.

Payment for the ITS Signal cabinets, conduit, data and power wiring must be included under separate contract items.

Payment will be as follows for each LED FULL COLOR VARIABLE MESSAGE SIGN System:

Twenty – Five percent (25%) of the bid price for each LED FULL COLOR VARIABLE MESSAGE SIGN System will be paid when the Contractor certifies the equipment is ready for delivery and installation at the Project site. (After Submissions, Shop Drawings, Test Plans, Factory Acceptance Tests, Equipment Delivery)

Twenty – Five percent (25%) of the bid price for each LED FULL COLOR VARIABLE MESSAGE SIGN System will be paid when the VMS Sign equipment has been rigged in, installed and approved at the Project site. (After VMS equipment installation, and wiring to the ITS signal cabinet, including Water Tests, Stand Alone and SAT Tests).

Twenty – Five percent (25%) of the bid price for each LED FULL COLOR VARIABLE MESSAGE SIGN System will be paid when the VMS Sign equipment has been approved at the completion of the COT and RSAT tests is accepted by the Engineer.

Fifteen percent (15%) of the bid price for each LED FULL COLOR VARIABLE MESSAGE SIGN System will be paid when the LED FULL COLOR VARIABLE MESSAGE SIGN equipment has been approved, at the completion of the Integrated Systems Testing (IST), once approved by the Engineer and the NYCDOT.

Ten percent (10%) of the bid price for will be paid when the contractor submits Record Drawings, Maintenance & Operations Manuals, provides orientation plan, orientation documents and conducts formal orientation on the LED FULL COLOR VARIABLE MESSAGE SIGN operations to the City employees. The City must have beneficial use, acceptances, guarantee and warranty documentation for approval of this payment.

Item No.	Item	Pay Unit
PK-ESCR-468	**LED FULL COLOR VARIABLE MESSAGE SIGN (VMS) OSS-1**	**EACH**
PK-ESCR-469	**LED FULL COLOR VARIABLE MESSAGE SIGN (VMS) OSS-8S**	**EACH**

END OF SECTION

SECTION PK-ESCR 691 – BRICK MASONRY/PRECAST CONCRETE FOR DRAINAGE STRUCTURE

PK-ESCR 691.1. **WORK:** Under this item, the Contractor shall build or provide **BRICK MASONRY/PRECAST CONCRETE FOR DRAINAGE STRUCTURE** in accordance with the plans, specifications, and directions of the Engineer.

PK-ESCR 691.2. **MATERIALS:**

Brick: Brick Masonry drainage structures shall not be permitted for this contract. All structures shall be precast concrete. Brick shall be only utilized for manhole cover and catch basin grate adjustments, as directed by the Engineer.

Mortar: The mortar shall be composed of one (1) part of Portland cement and a maximum of two (2) parts fine aggregate, with not more than five percent (5%) of the cement content of hydrated lime putty.

Precast Concrete: All new park drainage and sanitary structures shall be precast concrete. The Contractor and the Contractor's precaster shall be responsible for the structural design, to meet H-20 loading, of any new structures to meet the rim and invert elevations indicated on the details located in Appendix A of the contract drawings. Payment shall be made on a cubic yard basis of precast concrete at the same price bid for brick masonry. No additional payment shall be made for structural design of precast structures.

Ladder Rungs for Precast Concrete Drainage Structures: Ladder rungs for precast drainage structures shall be constructed of copolymer polypropylene plastic, as manufactured by M.A. Industries Peachtree City, GA, or approved equal. The cost for these ladder rungs shall be included in the cubic yard unit cast for precast structure.

PK-ESCR 691.3 **INSTALLATION**:

Laying Bricks: Bricks shall be satisfactorily wet when being laid, and each brick shall be laid in cement mortar so as to form full bed, end and side joints at one operation. The joints shall not be wider than three eighth inch (3/8"), except when the bricks are laid radially, in which case the narrowest part of the joint shall not exceed one quarter inch (1/4"). The bricks shall be laid in a professional manner true to line and wherever practicable, the joint shall be carefully struck and pointed on the inside. Brick work shall be laid with a satisfactory bond and as it progresses, shall be racked back in course, unless otherwise permitted.

Cold Weather: In freezing weather, bricks shall be heated sufficiently to remove all ice and frost. No brickwork shall be laid or relaid when the temperature is below 25° Fahrenheit..

PK-ESCR 691.4. **PROTECTION:** All fresh brickwork shall be carefully protected from freezing and from drying effects of the sun and wind and, if required, shall be sprinkled with water at such intervals and for such time as may be directed. Brickwork shall be protected from injuries of all sorts, and all portions which may become damaged or may be found defective shall be repaired, or if directed, to be removed and rebuilt to the satisfaction of the Engineer.

PK-ESCR 691.5. **LIABILITY:** When using precast concrete drainage structures, the Contractor accepts full and complete responsibility for the location of knock-out holes that allow for the entrance of drainage pipes. All pipe invert dimensions shall be verified in the field by the

contractor prior to ordering precast drainage structures. No additional compensation shall be paid by the city of any discrepancies that may occur.

PK-ESCR 691.6. **SUBMITTALS:** All submittals shall be in accordance with the requirements of the S-Pages.

Shop Drawings showing all invert elevations must be submitted for approval, prior to use of the precast drainage structures.

PK-ESCR 691.7. **MEASUREMENT AND PAYMENT:** The quantity of **BRICK MASONRY/PRECAST CONCRETE FOR DRAINAGE STRUCTURE** to be paid for under this item shall be the number of **CUBIC YARDS** furnished and laid complete in the work, in accordance with the plans, specifications, and directions of the Engineer.

The price bid shall be a unit price per **CUBIC YARD** of Brick Masonry/Precast concrete furnished and incorporated in the work complete, and shall include the cost of furnishing all labor, material, equipment, including ladder rungs as necessary, and incidental expenses necessary to complete the work in accordance with the plans and specifications, to the satisfaction of the Engineer.

No deductions will be made for spaces occupied by pipes entering drainage structure.

Any frames, covers, etc. if necessary shall be paid for separately under their respective contract item.

Excavation shall be paid for separately under its own contract item.

Item No.	Item	Pay Unit
PK-ESCR 691	BRICK MASONRY/PRECAST CONCRETE FOR DRAINAGE STRUCTURE	C.Y.

END OF SECTION

SECTION PK-ESCR 600 – SAND BASE FOR UTILITY LINE

WORK: Under this item, the Contractor shall furnish and install **SAND BASE FOR UTILITY LINE** as a cushion for utility piping/conduit beds or to fill abandoned and/or discontinued manholes, catch basins, and other structures etc., all in accordance with the plans, specifications, and directions of the Engineer.

MATERIAL: Sand shall meet the requirements of select granular fill as described in the NYCDEP Standard Sewer and Water Specfications.

Sand shall consist of clean, hard, durable, uncoated stone particles, free from lumps of clay and all deleterious substances.

Sand shall be so graded that when dry, one-hundred percent (100%) shall pass through a one-quarter inch (1/4") square opening sieve; not more than thirty-five percent (35%) by weight shall pass a No.50 sieve and not more than ten percent (10%) by weight shall pass a No.100 sieve.

Sand may be rejected for this class if it contains more than ten percent (10%) by weight of loam and/or silt.

MEASUREMENT AND PAYMENT: The quantity of **SAND BASE FOR UTILITY LINES**

to be paid for shall be the number of **CUBIC YARDS** placed in accordance with the plans, specifications and to the satisfaction of the Engineer.

The price bid shall be a unit price per **CUBIC YARD** of sand furnished and installed in place and shall include all labor, materials, and equipment necessary to complete the work in accordance with the plans and specifications, to the satisfaction of the Engineer.

Item No.	Item	Pay Unit
PK-ESCR-600	Sand Base for Utility Line	CY

END OF SECTION

SECTION PK-ESCR 601 – WET CONNECTION – 6" DIA.

SECTION PK-ESCR 602 – WET CONNECTION – 8" DIA.

SECTION PK-ESCR 609 – WET CONNECTION – 4" DIA.

WORK: Under these Items, the Contractor shall make a **WATER TAP** or **WET CONNECTION** of the size shown on the plans, to the existing water main in accordance with the plans, specifications, and directions of the Engineer. The Contractor shall obtain a permit from D.E.P, saw cut pavement, prepare opening, abandon, disconnect, cap, or plug any existing water service from the existing water main in accordance with the Rules of the Bureau of Water Supply, arrange D.E.P. installation, arrange inspection (where required) prior to backfilling and restore street pavement.

PERMITS: The Contractor shall employ a licensed Certified Master Plumber to obtain a permit from the New York City Department of Environmental Protection, Bureau of Water Supply and Wastewater Collection, Tapping Division, hereinafter referred to as D.E.P. All permits for work requiring opening or obstructing a street and/or sidewalk shall be contingent on approval by the Department of Transportation (DOT) or the agency having jurisdiction to authorize such opening. All permits shall be displayed at the work site.

MATERIALS & EXECUTION: The Contractor shall notify the Engineer three (3) days prior to intended date of work. Water taps and wet connections to a City Main shall be inserted or installed only by D.E.P employees, unless waived by D.E.P. The Contractor shall set up appointment with D.E.P and pay all D.E.P. fees under this item. The Contractor shall erect proper barricades and all other protective devices in strict compliance with City ordinances governing the protection of the public. All materials, excavation, saw cutting, and restoration of street pavement (where applicable) shall be performed in accordance with D.E.P. and New York City Department of Transportation requirements. Size of excavation for water tap or wet connection shall be in accordance with the requirements of NYC Department of Environmental Protection "Rules governing and Restricting the Use and Supply of Water" Appendix Table #4 and Detail Figure No.1. If subsurface conditions prevent a plumber from making an excavation of the dimensions indicated therein, the plumber shall immediately notify the Engineer. The Engineer, in turn shall notify D.E.P., who has the discretion to determine whether the dimensions should be changed, and what the new dimensions for the excavation shall be. Where excavations are required to be larger than Appendix Table #4, such excavation shall be paid separately under the item "Unclassified Excavation". All excavations shall be made safe by sheeting and bracing, where depth of excavation exceeds five (5) feet. Hand excavate as necessary to protect underground utilities. Arrange for inspection by D.E.P. (where necessary) prior to compacting backfill in six (6") inch lifts and street pavement restoration.

INSPECTION: Where required by D.E.P., the connection shall be inspected prior to backfilling.

MEASUREMENT AND PAYMENT: For each **WATER TAP** or **WET CONNECTION** made in accordance with the plans, specifications, directions of the Engineer and provisions of the D.E.P. permit, the Contractor shall receive the unit price bid.

The price bid shall be a unit price for **EACH** Water Tap or Wet Connection made and shall include

furnishing all labor, material, equipment, and incidental expenses including obtaining permits, saw cutting, gooseneck connection for copper water tubing, unclassified excavation and/or hand excavation as required, all fees to D.E.P., backfilling and compaction to complete the work in accordance with the plans and specifications, to the satisfaction of the Engineer.

Excavation beyond what is required by D.E.P. Appendix Table #4, Cap water line, Maintenance and protection of traffic, Restoration of Street Pavement, water line beyond the gooseneck connection, and Temporary Sheeting (where applicable) shall be paid under separate contract items.

Item No.	**Item**	**Pay Unit**
PK- ESCR-601	Wet Connection - 6" DIA.	EA
PK-ESCR-602	Wet Connection - 8" DIA.	EA
PK-ESCR 609	Wet Connection – 4” DIA.	EA

END OF SECTION

SECTION PK-ESCR 603 – RPZ AND WATER METER W/REMOTE AND HEATED ENCLOSURE

WORK: Under these Items, the Contractor shall provide all labor, materials and equipment necessary or required to furnish and install **RPZ and WATER METER W/ REMOTE and HEATED STRUCTURE** of the size indicated, including all piping, fittings, valves, test tee, and test tee valve, if required and other incidentals necessary to complete plumbing work and connection to water service and water feed lines in accordance with the plans, specifications, and directions of the Engineer. RPZ (Reduced Pressure Zone Valve) device is also known as a Backflow Preventer. Water Meter W/ Remote Reader shall include Water Meter, Strainer and Automatic Reading & Billing System (also known as Remote Reading Device). All factory plumbing work is to be done by a Licensed Plumber. All on-site plumbing work is to be done by a New York City Master Licensed Plumber. The Contractor shall comply with all rules, regulations, and requirements of all regulatory agencies having jurisdiction. In addition, the Contractor shall furnish extra material to D.P.R. Maintenance and Operations Borough Shop as specified under the heading INCIDENTAL MATERIALS.

MATERIALS: Unless otherwise provided for herein, all materials and methods of construction shall conform to the requirements of the NYCDOT Standard Highway Specifications.

Concrete: Concrete shall conform to the provision of the Standard DPR Item for "Controlled Concrete". All concrete shall have a honed finish. The precast concrete shall be well cured, shall be dense and shall have good edges.

Reinforcement: Steel reinforcement shall conform to the provisions of the D.P.R. standard items for "Steel Bar Reinforcement" and "Steel Fabric Reinforcement". Reinforcement shall be placed as shown on the drawings.

Below Grade Water Piping: Cement lined ductile iron pipe and fittings shall conform to the provisions for Ductile Iron Pipe contained in these Specifications.

Above Grade Water Piping: Flanged Ductile Iron Pipe with Ductile-Iron or Gray-Iron Threaded Flanges shall conform to the requirements of AWWA C115-05. 12-in. and smaller flanged joints with ductile-iron flanges shall be rated for a maximum working pressure of 350 psi.

RPZ: The RPZ (Reduced Pressure Principle Backflow Prevention device) shall be Febco Model #825YD OSY, or approved equal. Size shall be as indicated above and on the Contract Drawings. The RPZ shall meet the requirements of American Society of Sanitary Engineers (ASSE) Standard 1013 & the American Water Works Association (AWWA) Standard Code 506-78.

The RPZ shall consist of two independently operating center guided, spring loaded, "Y" pattern check valves and one hydraulically dependent differential relief valve. Mainline valve body and caps including relief valve body and cover shall be bronze. Check valve and relief valve components shall be constructed so they may be serviced without removing the valve body from the line. Shut-off valves and test cocks shall be full ported resilient seated ball valves.

EFFECTIVE JAN. 4TH, 2014, ALL PROPOSED INSTALLATIONS/ REPAIR OF BACK FLOW PREVENTER (BFP) DEVICES AND ALL ASSOCIATED VALVES TO BE UTILIZED ON ALL DOMESTIC DRINKING WATER SERVICES FOR HUMAN CONSUMPTION, MUST BE LEAD-FREE IN COMPLIANCE WITH THE AMENDED FEDERAL LAW, SAFE DRINKING WATER ACT (SDWA).

OS&Y Gate Valve: Outside Stem and Yoke valves shall be mechanical joint, iron body, resilient seated gate valves conforming to AWWA C509-01.

Heated Insulated Enclosure:

A. Materials of Fabrication

1. Enclosure Construction
   a. Mill finish aluminum, ASTM B209.
   b. Gel coated fiberglass.
   c. Polyethylene

2. Insulation shall be polyisocyanurate foam: spray applied, frothed in place or board stock laminated between two (2) layers of fiberglass mat. The insulation shall have the following properties.
   a. Dimensional stability – less than 2% linear change.
   b. Comprehensive strength – 20 P.S.I.
   c. Water absorption – less than 1 % by volume.
   d. Density – nominal 2.0 lbs. per cubic foot.
   e. Flame spread – 25
   f. Service temperature minus (-) 100 degrees F. to +250 degrees F.
   g. Insulation thickness shall be 1" for enclosures up to 2" I.P.S. and 1.5" for enclosures 2.5" I.P.S. and above with a minimum "R" factor of eight (8).
   h. Adhesive applied board stock or insulation materials secured by mechanical fasteners shall be cause for rejection.

3. Structural members shall be aluminum or fiberglass.

   a. No wood or "particle board" shall be allowed in assembly.

B. Components

1. The roof, walls and access panels shall be constructed of the specified materials in the specified thicknesses.

2. Multi-sectional enclosures shall fit together with the overlapping "tongue and groove" joints and be secured internally with mechanical fasteners.

3. The enclosure shall be securely attached to a concrete base or fiberglass pad with anchor brackets installed on the interior of the enclosure, through the flange base of the enclosure itself or through a stainless steel anchor hinge.

4. Access panels shall be provided to allow easy access for operations and maintenance without removal of the enclosure.

5. Access panels shall be secured using a four (4) pronged interior latch with a padlock through the handle, on the multi-sectional aluminum enclosures. Fiberglass enclosures shall be secured by using a padlock in conjunction with a stainless steel hasp and staple that has been attached to the enclosure during manufacturing.

6. Drain openings shall be designed to remain closed except when the device is discharging water. Openings shall be designed to accommodate the maximum discharge of the backflow prevention device and shall protect against the intrusion of the wind, debris and animals.

C. Heating Equipment

1. Heating equipment shall be furnished and designed, by the manufacturer of the enclosure, to maintain an interior temperature of +40 degrees F with an exterior/outside temperature of minus (-) 30 degrees F and a velocity of 15 mph.

a. The factory assembled heating equipment shall be ETL, UL or CSA certified.
b. Field assembled heater parts shall be cause for rejection.
c. Heating equipment shall be installed above the level of Double Check Valve discharge, when possible.
d. Electric power source for heat and accessories shall be G.F.I. protected, with 18” minimum clearance from receptacle base to top of slab.

D. Mounting Hardware

1. Mounting hardware shall be corrosion resistant and provided with the enclosure by the manufacturer.

2. Assembly fasteners shall be corrosion resistant.

3. Anchor hardware shall be adjustable up to 2” vertical to accommodate uneven concrete slabs.

E. Manufacturer

1. The enclosure manufacturer shall be a company specializing in the manufacturing of such enclosures with at least fifteen (15) years of successful field experience and be A.S.S.E. 1060 Seal Certified.

2. The heated insulated enclosure shall be as manufactured by Hot Box® or approved equal.

Water Meter:

A. General

1. The meter shall be a fire service compound meter type as manufactured by Neptune.

2. All meters furnished shall be manufactured by a registered ISO 9001 quality standard facility. Acceptable meters shall have a minimum of five years of successful field use. All specifications meet or exceed the latest revision of AWWA C703.

B. Type

1. Meters shall consist of a combination of an AWWA class II in-line horizontal axis turbine for measuring high rates of flow and a positive displacement bypass meter conforming to AWWA C700 for measuring low rates of flow. An automatic valve shall direct the flow from the bypass meter to the mainline meter as flow rates increase and back to the bypass meter as flow rates decrease. All components of the meter assembly shall be both UL (Underwriter’s Laboratory) listed and Fm (Factory Mutual) approved for fire service use.

C. Capacity

1. The capacity of the meters in terms of normal operating range, maximum rate for continuous use, maximum loss of head, and extended low flow capability is as follows:

Size	Normal operating range (gpm)	Maximum rate for continuous use (gpm)	Maximum loss of head @ max rate (psi)	Extended low flow (gpm)
8”	2 - 4000	4000	10.5	1

D. Size

1. The size of meters shall be determined by the nominal size (in inches) of the opening in the inlet and outlet flanges. Overall lengths of the meters shall be as follows:

Meter size	Laying length
8”	53”

E. Case and cover

1. The meter body, strainer body, and valve body shall be fabricated steel with a coating of fusion-bonded epoxy both internally and externally.
2. The meter body shall be welded to the valve body effecting a uni-body construction with the valve. The strainer outlet and meter inlet shall be connected by a Style 77 Victaulic or other UL listed/fm approved grooved coupling. The meter assembly shall have a rated working pressure of 175 psi.
3. The meter cover shall be cast of a no-lead high copper alloy containing a minimum of 85% copper. An arrow indicating direction of flow shall be cast in raised characters on the cover. The cover shall have a rated working pressure of 175 psi. The cover shall contain a calibration vane for the purpose of calibrating the turbine measuring element while in-line and under pressure. The calibration vane shall be mounted under the register that is attached in a tamper-resistant manner.

F. Strainer

1. Meters shall be supplied with a strainer designed and approved for the fire service use by UL and FM, and shall have a rated working pressure of 175 psig. The strainer shall be constructed of steel and coated with fusion-bonded epoxy. The strainer basket shall be constructed of AISI Type 18-8 stainless steel. The strainer shall contain a flushing port located near its bottom to facilitate easy cleaning.

G. External bolts

1. Meter cover bolts shall be made of AISI Type 316 stainless steel. All other bolts shall be zinc-plated steel or stainless steel.

H. Connections

1. Inlet and outlet flanges shall be round flanged per AWWA C207, Class D.

I. Registers

1. Registers shall be permanently roll-sealed, straight reading in gallons and cubic feet. Registers shall include a center-sweep test hand and low flow indicator. Registers shall be removable for replacement without interruption of the service line.

J. Register boxes

1. Register boxes and covers shall be of bronze composition. The name of the manufacturer and the meter serial number shall be clearly identifiable and located on the register box covers.

K. Register box sealing

1. The register box shall be affixed to the top cover by means of a plastic tamperproof seal pin that must be destroyed in order to remove the register.

L. Meter serial number

1. The meter serial number shall be on the meter flange or cover and on register box covers.

M. Unitized measuring element

1. A UME is a complete assembly, factory calibrated to AWWA standards that includes the cover, registers, and a turbine measuring element. It shall be easily field removable from the meter body without the requirement of unbolting flanges.

N. Intermediate gear train

1. The intermediate gear train shall be directly coupled to the turbine rotor and magnetically coupled to the register through the meter cover. The gear train shall be housed within the turbine measuring chamber. All moving parts of the gear train shall be made of a self-lubricating polymer or AISI Type 316 stainless steel for operation in water.

O. Bypass meter

1. The bypass meter shall be of a positive displacement, nutating disc type. The bypass meter may be piped on the left or right side of the assembly. The bypass meter shall conform to AWWA C700 standards in the following sizes:

Mainline size	Meter size
8” & 10” mainline	2” bypass meter

P. Automatic valve

1. The automatic valve shall be of the spring-loaded, knuckle-joint type. All internal linkage parts shall be stainless steel. A vulcanized rubber disc on a stainless steel clapper plate shall seal against a bronze seat. The springs shall be AISI Type 18-8 stainless steel.

2. The disc meter shall include a self-actuated valve that directs flow through the disc meter at low flow rates, and through the turbine meter at high flow rates. At high flow rates, the self-actuated throttle valve shall restrict the flow through the disc meter to minimize wear.

Q. Registration accuracy

1. Registration accuracy over the normal operating range shall be 98.5% to 101.5%.

R. Remote capability options

1. Type A — all meters shall be equipped with encoder remote registers per AWWA C707, and meet all AWWA C703 performance standards.
2. Type B — all meters shall be equipped with generator remotes per AWWA C706, shall meet all AWWA C703 performance standards, and shall include all hardware. Two-wire cable is not to be included in quoted meter prices.

S. Acceptable meters shall be Neptune HP Protectus® III or approved equal.

Remote Reader:

A. The Remote Reader shall be Neptune Proread ARB System ® as manufactured by Schlumberger Industries Water Division or Remote Meter Read (RMR) System® as manufactured by ABB, or approved equal. The Remote Reader shall be a self-contained encoder register metering system designed to obtain remote simultaneous water meter registration directly from the register odometer. The metering information shall be obtained

through a remotely located receptacle using a compatible data capture system. The system shall consist of the Encoder Meter Register and Remotely Mounted Receptacle.

1. Encoder Meter Register: Shall be direct mounted with encoded odometer wheels and digital data stream. Batteries or pulses are not allowed.

2. Registration: The register shall provide a six digit visual registration at the meter. The unit shall, in a digital format, simultaneously encode the four or six most significant digits of the meter reading for transmission through the remotely located receptacle. (The most significant meter registration digits are defined as those digits on the register number wheels that denote the highest recorded values of water consumption.) A quick indexing mechanism shall be employed which shall prevent ambiguous reading. The register shall have a full test sweephand or dial divided into gradients of down to 1/100th of the units of registration. Register test rings shall be available for shop testing. The units of registration shall be in U.S. gallons. These units shall be clearly designated on the face of the register. The month and year of manufacture and other identification information shall appear on the face of the register. The register shall employ a leak detection indicator on the dial face. Registers using pulse generation or conversion of pulses to digital output is not permitted. Batteries shall not be required.

3. Mechanical Construction: Materials used in the construction of the register shall be compatible with the normal water meter environment and with each other. The unit shall possess a copper bottom and incorporate a rubber O-ring seal. Where indicated, pit set registers must be provided with moisture protection for all internal components when operating under flooded pit conditions. The register and mounting base shall be integral components and should not allow for disassembly. The register shall be attached to the meter case by a bayonet attachment. Fastening screws or nuts shall not be required. A tamperproof plastic seal pin shall be used to secure the register to the main case. No special tools shall be required to remove the register. The register head must swivel 360 degrees without removing the seal pin to facilitate visual reading and ease of wiring. The register shall be removable from the meter without disassembling the meter body and shall permit field installation and/or removal without taking the meter out of service. Provision shall be made in the register for the use of seal wires to further secure the register. Terminal screws must be accessible on the register for transmission wire connection to the remote receptacle or future connections to a telephone system.

4. Electrical Construction: The materials employed for contacts and connectors shall inhibit corrosion and shall suffer minimal effect from environmental conditions to which they are exposed. The number wheels used in the register assembly shall be provided with spring-type bifurcated metal contacts to ensure a high probability of information transmission.

   Connection shall be made to the register by three screw-type terminals, sonically inserted into the register top. Access to the terminals shall be available to all models of register. A port cover shall be provided to cover the terminals after they have been wired. Digitally formatted data transmitted from the register shall incorporate a check sum character to verify correct information transmission and integrity. Data errors shall be indicated by the reading equipment.

5. Meter Reading Information: The encoder register shall provide up to six digits of information to the reading equipment. A ten digit identification number shall also

be provided with each reading. The utility shall have the option to reprogram the internal register identification number an unlimited number of times. The encoder register must have the capability to provide additional custom information to the reader. This information shall be programmed (and reprogrammed at any time) by the utility. Information on programming the register, equipment needed, and encoder meter reading output shall be provided with each proposal.

6. Remote Mounted Receptacle: Remote receptacle shall provide a communication link for the transmission of information from the register.

   a. Mechanical Construction: Where indicated, a remote receptacle must be provided for attachment to a pressure treated wood post. The materials employed shall be corrosion resistant, resist ultraviolet degradation, unaffected by rain or condensation, and compatible with rugged service and long life.
   b. Electrical Construction: The receptacle construction shall incorporate the function of a cable clamp or strain relief. Design of the unit shall be such that it provides for mechanical and electrical connection between the receptacle and interrogation equipment.
   c. Cable: The connecting cable shall be of the two-wire conductor type in a sheath which shall be abrasion and moisture resistant. Each conductor shall be color coded.

7. PVC Conduit for Remote Mounted Receptacle: PVC conduit for all buried installations shall be heavy-wall Type 40 polyvinyl chloride conduit and shall conform to NEMA and ASTM Standards (NEMA TC-6 & TC-9, ASTM D2244 & 2412) and be UL listed in conformance with the National Electric Code for the use intended. Conduit, fittings and cement shall be produced by the same manufacturer. Material must have a minimum tensile strength of 8,600 psi. Conduit shall be Carlon Type DB or approved equal.

Electrical Work: Contractor to provide four specification grade GFI receptacles with weatherproof in use covers in cast iron FD junction boxes for the heaters. Heaters and junction box to be mounted 18 inch minimum above slab evenly spaced throughout the enclosure. Conduit and wire size shall be as shown on the site plan, all wire within the enclosure shall be USE-2 with EPR insulation and conduit shall be PVC coated rigid galvanized steel.

INSTALLATION:

The Contractor shall install supports for the water meter at the height shown on the Contract Drawings. The meter shall be set so that the dial faces upward and is horizontal. The dial shall not be more than three (3) feet above the floor. The encoder register shall be installed on meter as per manufacturer's instructions.

The remote reader receptacle shall be installed cover as per the manufacturer's directions and recommendations on a 4”X4” pressure treated post set in a concrete footing. The Contractor shall allow sufficient Water Meter Remote Reader cable slack for possible relocation of the remote reader.

The DCV shall be installed as shown on the Contract Drawings and per manufacturer's instructions.

Heated Enclosure: Enclosure shall be assembled and mounted on a concrete pad according to the manufacturer’s instructions and Contract Drawings. The Enclosure shall be installed plumb, level and square.

Connections: The Contractor shall connect the water piping as shown on the Contract Drawings for complete and satisfactory operating unit to the satisfaction of the Engineer. Connections shall be made to The Water Meter by coupling union or flange union on both inlet and outlet ends of the meter and bored for sealing with holes not less that one-eight (1/8) of an inch in diameter - solder connections are not permitted. Connections to the DCV shall be as shown on the Contract Drawings and per manufacturer's instructions.

SUBMITTALS: Provide Product Data including Manufacturer's catalog sheets and specifications for each item.

Shop Drawings: The Contractor shall submit Shop Drawings when required, in accordance with the requirements of the S-Pages. A shop drawing is required showing installation of the complete DCV assembly, water meter, piping, pipe supports, and the precast concrete structures.

Catalog Cuts: The Contractor shall submit Catalog Cuts of the DCV, water meter, meter reading system, strainer, valves, and all connected piping for approval prior to installation.

Certifications: The Contractor shall be responsible for obtaining all certifications necessary to comply with the NYC Bureau of Water Supply & Wastewater Collection, Cross Connection Control Unit & the NYS Dept. of Health regulations for Double Check Valves (after installation), including Certification by Backflow Prevention Device Tester; Certification of Master Plumber responsible for the Double Check Valve installation, and a Professional Engineer's or Registered Architect's Certification that the installation is in accordance with the approved Plans.

The Contractor shall prepare and submit copies of N.Y.S.D.O.H. Form Gen. 215B to the NYS Dept. of Health & NYC Cross Connection Control Unit of the Bureau of Water Supply & Wastewater Collection. NYCDPR shall receive copies in triplicate of all such submittals. The Engineer. In summation, the Contractor shall be held completely responsible to ensure that all Work is in compliance with N.Y.S. D.O.H., Form Gen. 215B.

MEASUREMENT AND PAYMENT: For the furnishing and installation of **EACH** size of the **RPZ and WATER METER W/ REMOTE AND HEATED ENCLOSURE** indicated complete and in place, including installation of all plumbing work, certifications, etc., in accordance with the plans, specifications, and directions of the Engineer, the Contractor shall receive the unit price bid.

The price bid shall be a unit price for **EACH** size RPZ, Water Meter w/ Remote and Heated Enclosure and shall include the cost of all labor, materials, equipment, and any incidental expenses necessary, including certifications, all plumbing work within the structure, connection to the water service at the structure; piping, valves, RPZ device, Water Meter, heated enclosure, heaters, electrical receptacles, etc. all in accordance with the plans and specifications, to the satisfaction of the Engineer.

In addition, the Contractor shall deliver INCIDENTAL MATERIALS as outlined above to D.P.R. Maintenance and Operations Borough Shop No additional payment shall be made for incidental materials. The Contractor shall include cost in the bid price.

Item No.	Item	Pay Unit
PK-ESCR-603	RPZ and Water Meter w/Remote and Heated Enclosure	EA

END OF SECTION

SECTION PK-ESCR 605 – 4” DIA. DUCTILE IRON CEMENT WATER PIPE LINE

SECTION PK-ESCR 606 – 6” DIA. DUCTILE IRON CEMENT WATER PIPE LINE

SECTION PK-ESCR 607 – 8” DIA. DUCTILE IRON CEMENT WATER PIPE LINE

SECTION PK-ESCR 608 – 10” DIA. DUCTILE IRON CEMENT WATER PIPE LINE

WORK: Under this Item, the Contractor shall furnish and install CEMENT LINED DUCTILE IRON WATER PIPE, of the size shown, in accordance with the plans, specifications and the directions of the Engineer.

MATERIAL: Pipe shall be Ductile Iron Pipe meeting requirements of A.N.S.I. Specifications A-

21.51 and A.W.W.A. Specifications C-151. Water pipe shall be Class 52 for 3" and 4" diameter and Class 56 for all pipes greater than 4" diameter.

All pipe shall be cement-mortar lined in conformance with A.N.S.I. 21.4. The exterior surface of pipe shall receive a standard foundry coal tar dip coating. Cement Lined Ductile Iron Water Pipe shall consist of bell and spigot type Ductile Iron Pipe Tyton Joint sections with Field Lock Gasket Joints, similar or equal to that manufactured by the U.S. Pipe & Foundry Co., Birmingham, AL, and shall conform to the American National Standards Institute C151 and American Water Works Assoc. A21.51., Thickness Class 52 and better. Pipe shall be laid true to line and grade with bells upstream and shall have a full, firm and even bearing on a bed of broken stone, as shown in the details.

Dielectric fittings/flanges shall be used where there is connection between dissimilar metals. All elbows shall be rodded in accordance with the specifications of the Dept. of Environmental Protection, Bureau of Water Supply.

CONNECTIONS: The Contractor shall do all the work necessary to join the Ductile Iron Pipe to the existing water lines as shown on the plans. The cost for doing this shall be included in the unit price bid for this item.

TESTS: The Contractor shall not backfill over any pipe until ordered by the Engineer. The pipe system shall be tight and show no leaks when filled with water, sealed and subjected to an internal hydrostatic pressure of one-hundred twenty-five (125) pounds per square inch. Temporary caps shall be placed where required to permit making the tests where valves are not available. The tests shall be made in the presence of the Engineer.

MEASUREMENT & PAYMENT: The quantity of **CEMENT LINED DUCTILE IRON WATER PIPE** to be paid for under this item shall be the number of **LINEAR FEET** (laying length) of each size pipe, including fittings, furnished and incorporated, in accordance with the plans, specifications, and the directions of the Engineer.

The price bid shall be a Unit Price per **LINEAR FOOT** of laying length of Cement Lined Ductile Iron Water Pipe of each size shown, and shall include the cost of all labor, materials, and equipment necessary to complete the Work, including fittings, in accordance with the plans and specifications, to the satisfaction of the Engineer.

Where fittings connect different sizes of pipe, the fittings shall be included in quantity measured for larger size.

Excavation and broken stone shall be paid for separately under their respective contract items.

Item No.	Item	Pay Unit
PK-ESCR-605	Ductile Iron Cement Water Pipe Line - 4" DIA.	LF
PK-ESCR-606	Ductile Iron Cement Water Pipe Line – 6” DIA.	LF
PK-ESCR-607	Ductile Iron Cement Water Pipe Line – 8” DIA.	LF
PK-ESCR-608	Ductile Iron Cement Water Pipe Line – 10” DIA.	LF

END OF SECTION

SECTION PK-ESCR 610 – GATE VALVE – MECHANICAL JOINTS – 4" DIA.

SECTION PK-ESCR 611 – GATE VALVE – MECHANICAL JOINTS – 6" DIA.

SECTION PK-ESCR 612 – GATE VALVE – MECHANICAL JOINTS – 8" DIA.

SECTION PK-ESCR 613 – GATE VALVE – MECHANICAL JOINTS – 10" DIA.

WORK: Under these Items, the Contractor shall furnish and install **GATE VALVES - MECHANICAL JOINTS** of the sizes shown on the Plans, in accordance with the plans, specifications, and directions of the Engineer.

GATE VALVES: Shall be U.S Pipe Model # USP1-20 Mechanical joint ends (with accessories unassembled), or approved equal, with Non-rising stem (NRS), Meets or exceeds all applicable requirements of ANSI/AWWA C515 Standard, UL 262 Listed, FM 1120/1130 Approved, and certified to ANSI/NSF 61 & 372, Standard mechanical joint ends comply with ANSI/AWWA C111, Nominal 10 mils Pro-Gard® Fusion Bonded Epoxy coated interior and exterior surfaces. Epoxy coating meets or exceeds all applicable requirements of ANSI/AWWA C550 Standard,

Iron wedge, symmetrical & fully encapsulated with molded rubber; no exposed iron, Triple O-ring seal stuffing box (2 above the thrust collar and 1 below), 2" square wrench nut–-open left or open right, 350 psig (2400 kPa/24 barg) maximum working pressure, 700 psig (4800 kPa/48 barg) static test pressure, UL Listed, FM Approved: 350 psig (2400 kPa/24 barg), Designed for potable water applications

EFFECTIVE JAN. 4TH, 2014, ALL PROPOSED INSTALLATIONS/ REPAIR OF VALVES TO BE UTILIZED ON ALL DOMESTIC DRINKING WATER SERVICES FOR HUMAN CONSUMPTION, MUST BE LEAD-FREE IN COMPLIANCE WITH THE AMENDED FEDERAL LAW, SAFE DRINKING WATER ACT (SDWA).

OPERATING KEY: An approved operating key of proper size for each valve shall be furnished by the Contractor except that the Contractor need not furnish more than two (2) keys for each size or kind of valve regardless of the quantity of valves called for in the Contract.

SUBMITTALS: Provide Product Data including Manufacturer's catalog sheets and specifications for each valve type. List type of valves, manufacturer's model number, and size for each service application.

MEASUREMENT & PAYMENT: The quantity of **GATE VALVES - MECHANICAL JOINTS** to be paid for under these Items shall be the number of valves of each size, furnished and installed in accordance with the Plans and Specifications and directions of the Engineer.

The price bid shall be a unit price for **EACH** valve of each size, and shall include the cost of all labor, materials, equipment and incidental expenses necessary to complete the work in accordance with the plans, specifications, and to the satisfaction of the Engineer.

Excavation shall be paid for separately under its own item.

Item No.	Item	Pay Unit
PK-ESCR-610	Gate Valve - Mechanical Joints - 4" DIA.	EA
PK-ESCR-611	Gate Valve - Mechanical Joints - 6" DIA.	EA
PK-ESCR-612	Gate Valve - Mechanical Joints - 8" DIA.	EA
PK-ESCR-613	Gate Valve - Mechanical Joints - 10" DIA.	EA

END OF SECTION

SECTION PK-ESCR 614 – QUICK COUPLING VALVE AND VACUUM BREAKER WITH CHAMBER

WORK: Under this item, the Contractor shall furnish all labor, materials, and equipment necessary or required to install a **QUICK COUPLING VALVE AND VACUUM BREAKER WITH CHAMBER**, including all incidentals, all plumbing work, connection to water service, and irrigation accessories in accordance with the plans, specifications, and directions of the Engineer.

MATERIALS:

CAST STONE CHAMBER: The vacuum breaker chamber shall be constructed of reinforced cast stone and set in place on a concrete base, or as shown on the plans. The cast stone shall be manufactured by an approved manufacturer, having facilities for furnishing the quality of cast stone required.

The three-eighth inch (3/8") dia. reinforcing bars shall protrude three inches (3") beyond the bottom of the chamber. When the chamber is set in place, same shall be grouted to one inch (1") holes, which shall be provided in the bench base. Grout to base shall be 1:2 cement mortar.

All cast stone shall be made of the color and finish to match the approved sample. Cast stone shall have a honed finish. The stone shall be well cured, shall be dense, and shall have good edges. The cast stone shall be made of gray air entraining Portland Cement and crushed stone aggregate mixed in the proportions required to obtain a mixture of maximum density and a finished product of a color to be approved by the Engineer. The cement and aggregate shall be thoroughly mixed in a proportion of one (1) part Portland Cement to not over six (6) or less than four (4) parts of aggregate.

The aggregate shall be made by crushing selected pieces of stone to ensure uniform color and texture and shall be screened into at least three (3) sizes, the largest of which shall not exceed that which will pass a ring one-quarter inch (1/4") in diameter, furthermore, there shall be at least fifty percent (50%) of such size of aggregate that will not pass a one-eight inch (1/8") ring. The various sizes shall used in the proportions necessary to give maximum density, all measured by weight.

Cast stone shall have a compressive strength of not less than three thousand (3,000) psi tested as cubes 2" x 2" x 2" of an age not more than twenty-eight (28) days and shall have an absorption not to exceed seven percent (7%) of the dry weight after being dried to constant weight at 150° Fahrenheit.

No chipped, broken or checked stone will be accepted. Checked stones are those showing fine hair cracks or checks on the surface.

Color Admixture: Cast Stone shall be integrally colored using pigment admixture, color shall be "Dark Gray" and as approved by the Engineer. The color admixture shall be a single component, pigmented, water reducing concrete admixture such as Chromix Admixture for color conditioned concrete as manufactured by L.M. Scofield Co., Douglasville, GA or approved equal.

Admixture shall be thoroughly and uniformly mixed into the concrete. Admixture shall comply with Uniform Building Code Standard No. 26-9, as evidenced by a Research Committee Recommendation from ICBO (International Conference of Building Officials).

PLUMBING:

SCOPE: The Contractor shall furnish and install all pipe, fittings, valves, and other sundries to complete the plumbing for quick coupler and vacuum breaker.

CONNECTION: The Contractor shall connect the water lines as shown on the plan for a complete and satisfactory operating unit, to the satisfaction of the Engineer.

WATER PIPING: Water Piping shall be rigid hard temper type “K” copper tubing as shown on the plans meeting the specification for ASTM 888. Fittings shall be approved wrought copper and bronze solder -joint pressure fittings (ANSI B 16.22), Di-Electric fittings as required.

JOINTS: Joints shall be made by soldering, using 95-5 tin antimony solder.

COUPLING VALVE AND KEY : Quick coupling valve shall be solid bronze, bayonet type, locking yellow TuflTop, with a one (1”) inch inlet size, Buckner Model No. QB44LRC 10, as manufactured by Storm Manufacturing Group, Inc., Torrance, CA, or approved equal. Corresponding coupling key shall be three quarter (3/4”) inch inside diameter with a one (1") inch male thread, Buckner Model No. QB44K IO, as manufactured by Storm Manufacturing Group, Inc., or approved equal. One (1) key is required for each valve installed.

VACUUM BREAKER: Shall be of bronze construction, "FEBCO" Model No. 765, or approved equal, one-inch (1”) pressure vacuum breaker with an engineered plastic bonnet.

IRRIGATION ACCESSORIES: Before any irrigation materials are accepted, they shall meet such tests as may be required to prove to the satisfaction of the Engineer that they are in proper working order and will do the work for which they are intended, in a satisfactory manner. The Contractor shall turnover the following items after testing to the satisfaction of the Engineer.

Hose Swivel E11: Hose Swivel E11 shall be bronze with one (1") inch female thread for coupler and three quarter (3/4”) inch male garden thread for hose. Hose Swivel Ell must be manufactured by the same company as the Quick Coupling Valve & Key, and shall be Buckner Model HS-100 or approved equal. One required per site.

Brass Garden Hose Adaptor: Shall be a one (1") inch FPT, with a three-quarter (3/4") inch garden hose thread, Model # FM1076 as manufactured by George Taylor Brass and Bronze Works, Huntington, N.Y., or approved equal. One required per site.

Siamese "Y" Connectors: Siamese "Y" connectors shall be brass, with shut-off valves at each connection. Size shall be three quarter (3/4") inch by three quarter (3/4") inch. Two required per site.

Nozzle: Nozzle shall be a solid brass nozzle to fit a three-quarter (3/4") inch hose, Midsize #529 as manufactured by Gilmour, Chicago, IL or approved equal. One required per site.

Brass Rose: Rose shall be Brass, four (4") inches in Diameter with protective rubber guard and metric to inch hose thread converter, Model #5408, as manufactured by Dramm Corporation, Manitowoc, Wisconsin, or approved equal. One required per site.

Extension Handle: Extension handle shall be extruded aluminum tubing, thirty (30") inches long, with forged brass hose couplings and comfort hand grip, Model # 130-G, as manufactured by Dramm Corporation, Manitowoc, Wisconsin, or approved equal. One required per site.

Shut-Off Valve: Shut-off valve shall be brass with Teflon® seals and a hard chrome plated ball, Model #300, as manufactured by Dramm Corporation, Manitowoc, Wisconsin, or approved equal. One required per site.

Sprinkler Head With Base: Sprinkler head shall be brassand stainless steel impulse type mounted on a Rezimar wheeled base, six and one half inches (6 1/2') wide by nine inches (9") high, one and one half (1 1/2) pounds minimum weight for stability, with ergonomic grip and swivel coupling and a powder coated finish, to fit three-quarter (3/4”) inch hose. Sprinkler head and base shall be “Pulsating Sprinkler" Model # 50260 as manufactured by Nelson, Peoria, IL or approved equal. Two required per site.

Hose: Hose shall be garden hose, three-quarter (3/4") inch diameter in four (4) fifty (50') foot lengths, with a burst pressure of 500 psi minimum, equipped with approved connectors. Hose

shall be "Flexogen" as manufactured by Gilmour, Chicago, IL or approved equal. 200 feet of hose required per site.

Hose Reel: Hose Reel shall be constructed of one (1") inch diameter steel frame, with heavy-duty ten (1") inch wheels. Cart and reel shall have a baked enamel finish and be capable of holding two hundred (200') feet of 3/4" hose. Hose reel shall be as manufactured by A.M. Leonard or approved equal. One required per site.

Soaker Hose: Shall be porous pipe constructed primarily of recycled rubber tires. Hose shall weep along its entire length. Hose shall be five eighth (5/8") inch diameter in fifty (50') foot coupled lengths. All fittings shall be nickel plated brass. Hose shall be No. 17010 ColorStorm Premium 50 Foot Soaker Garden Hose as manufactured by Dramm, or approved equal. 100 linear feet of hose required per site.

Anchor Pins for Soaker Hose: Shall be five (5") inch x one (1") U-shaped 11 gauge steel pins. Each package shall contain ten (10) pins. Two packages required per site.

INSTALLATION: The cast stone chamber shall be installed on a concrete pad in accordance with the Standard Details.

Connections: All field connections to be made by a Master License Plumber. All other plumbing work required to complete the installation, including making water supply connections to the Quick Coupler shall be done in the field. All parts shall be installed in such a manner as to facilitate removal for purposes of replacement. Water lines shall be pitched away from the quick coupler. Pockets in rigid piping that cannot be drained by gravity will not be allowed.

SUBMITTALS: All submittals shall be submitted prior to manufacture.

SHOP DRAWINGS: The Contractor shall submit catalog cuts of the vacuum breaker and the quick coupling valve for approval.

SAMPLE: Before starting work, the Contractor shall submit, for approval of the Engineer, finished samples of the cast stone they propose to use to show the extreme range in color, finish, texture, and quality of the stone. Samples shall be marked with the name of the material, contract number, grade, finish, and producer's name. All cast stone used in the work shall be equal to the approved sample.

MEASUREMENT AND PAYMENT: For the construction and installation of a **QUICK COUPLING VALVE AND VACUUM BREAKER WITH CHAMBER**, complete with all

plumbing work in accordance with the plans, specifications and directions of the Engineer, the Contractor shall receive the unit price bid.

The price bid shall be a unit price for **EACH** Quick Coupling and Vacuum Breaker With Chamber and shall include the cost of all labor, materials and equipment necessary to complete the work, including reinforcing steel, cement, cast stone, color admixture, miscellaneous iron and steel, irrigation accessories, and all plumbing work and connections to water service within five feet (5') from the face of the Chamber, all in accordance with the plans and specifications, to the satisfaction of the Engineer.

Plug Valve, Valve Box, Excavation and Concrete shall be paid for separately under their respective contract items.

Item No.	Item	Pay Unit
PK-ESCR-614	Quick Coupling Valve and Vacuum Beaker with Chamber	EA

END OF SECTION

SECTION PK-ESCR 615 – FIRE HYDRANT WITH FENDERS

WORK: Under this Item, the Contractor shall furnish and install **FIRE HYDRANT WITH FENDERS** in accordance with the plans, specifications, and directions for the Engineer.

WORK INCLUDED: The Contractor shall employ a licensed plumber to install a new DEP-approved fire hydrant, steel pipe fenders and concrete pad as shown on the plans and as directed by the Engineer. Work shall include all necessary excavation, backfill, blocking, bracing, and broken stone for hydrant drainage. Hydrant lateral pipe, shut-off valve, valve box, and fittings shall also be paid for under this item. Wet connection and pipes to connect to the existing water main will be paid for separately.

CODE AND REGULATION: In accordance with the New York City Building Code §1702.17 27-948, there shall be at least one fire hydrant (city or private) located within two hundred and fifty (250') feet of a building. The hydrant shall be supplied by at least an eight (8") pipe, and the domestic water supply may be connected to this private supply provided a shut-off valve is installed in a curb box in the domestic supply within six (6') feet of the hydrant shut-off valve.

MATERIALS: All materials and installation shall conform to DPR Standard Detail and to the requirements set forth by the New York City Bureau of Water Supply, Department of Environmental Protection (D.E.P.).

HYDRANT: All hydrants installed shall be a two-piece "Breakaway" hydrant, Types S2-LP or D2-LP, as shown on BWS Standard Drawing Nos. 43250-Z or 43142-Z, respectively. Hydrant shall be the "A.P. Smith Hydrant" as manufactured by U.S. Pipe and Foundry, Birmingham, AL, or the "Dresser 500 Style" as manufactured by M & H Valve, Anniston, AL, or equivalent model pre-approved by D.E.P. **Any models not pre-approved by D.E.P. will NOT be acceptable.**

All parts of the hydrant shall be interchangeable with similar parts of hydrants of the same size and type. An arrow and the word "OPEN" shall be cast in relief on top of the hydrant showing the direction to turn in order to operate the hydrant. All bolt holes shall be accurately drilled from templates. All joints shall be faced smooth, so as to make a perfectly water-tight joint. Hydrant hose caps shall be securely attached to the hydrant by means of chains. The connections and nozzles shall have threads matching those in use by the New York City Fire Department.

Each hydrant shall be shop tested under 300 psi applied above the compression valve. Any hydrant showing sweating of the metal or leaking or other defects shall be rejected. All tests shall be made at the expense of the Contractor.

GATE VALVE: Shut-off valve shall be U.S. Pipe, model No. 5460, or approved equal, with mechanical joint pipe ends, cast iron body, bronze mounted, non-rising stem, 200 psi with two inch (2") valve operating nut.

VALVE BOX: 5 1/4" diameter valve boxes shall be Bingham & Taylor Fig. No. 4908 with a Fig No. 4904-L locking cover, or approved equal. The cover shall have the designation "WATER" cast thereon. The boxes shall extend within the limits called for on the plans.

LATERAL PIPE: Pipe shall be Ductile Iron Pipe Class 52 and better, meeting requirements of ANSI Specifications A-21.51 and AWWA Specifications C-151. Size of pipe shall be as shown on the drawings.

All pipes shall be cement-mortar lined in conformance with ANSI 21.4. The exterior surface of pipe shall receive a standard foundry coal tar dip coating. Cement Lined Ductile Iron Water Pipe

shall consist of bell and spigot type Ductile Iron Pipe Tyton Joint sections with Field Lock Gasket Joints, similar or equal to that manufactured by the U.S. Pipe & Foundry Co., Birmingham, AL, and shall conform to the American National Standards Institute C151 and American Water Works Association A21.51, Thickness Class 52 and better. Pipe shall be laid true to line and grade with bells upstream and shall have a full, firm and even bearing on a bed of broken stone, as shown in the details.

HYDRANT FENDERS: Fenders shall be extra heavy galvanized steel pipe, 5.6" O.D. and shall conform to ASTM Serial Designation A-120, Schedule 80, except that pipe shall be unthreaded and untested for water pressure. A malleable iron or cast iron screw cap shall be tack welded to cap the fenders after the pipes are filled with concrete.

PAINT: Paint for standpipe shall be heavy-duty enamel paint VOC-complying, color shall be black. Paint for hydrant dome and steel fenders shall be heavy-duty rust resistant aluminum paint, such as "Silver-Brite® Heavy Duty Rust Resistant Aluminum Paint" as manufactured by The Sherwin-Williams Company, Woodside, NY, or approved equal.

CONCRETE PAD: Concrete pad around hydrant and fenders must meet the requirements of B-32 Concrete per the NYCDOT Standard Highway Specifications.

INSTALLATION: Each hydrant shall be installed and connected to the existing water main as shown on BWS Standard Drawing No. 18581-B-Z, "Standard Hydrant Connection for Steel and Ductile Cast Iron Water Mains". Installation of hydrant and all related plumbing work shall be performed by a licensed plumber.

HYDRANT: Hydrant shall be placed so that centerline of hydrant is approximately two (2'-0") feet back of the face of curb. The pumper nozzle shall face the road. Hydrants shall be set plumb and installed to proper height.

Each fire hydrant shall be installed on a concrete pad not less than six (6") inches thick and have a minimum area of three (3') feet by five (5') feet. Concrete pad shall have a broom finish. The backside of the hydrant, opposite the pipe connection shall be firmly blocked against the vertical face of the trench to prevent the hydrant from blowing off the line. If the character of the soil is such that the hydrant cannot be securely blocked, then bridle rods and rod collars shall be used. Bridle rods and rod collars shall be less than three-fourths (3/4") inch stock, and shall be thoroughly protected by painting with acid resisting paint.

Around the base of each hydrant shall be placed not less than seven (7) cubic feet of broken stone to ensure the complete drainage of the hydrant when closed. All backfill around hydrants and valves shall be thoroughly and carefully compacted after correct positioning Before installing any hydrant, care shall be taken to see that all foreign material is removed from the interior of the barrel. When hydrant is ready for service, the hydrant and valve shall be opened and closed to see that all parts are in working condition. After closing the main valve, a nozzle cap shall be removed and the standpipe interior inspected to make sure of proper drainage.

HYDRANT FENDERS: Two (2) steel pipe hydrant fenders must be installed with the hydrant, unless otherwise directed by the Engineer in writing, in accordance with DPR standard detail, and BWS Standard Detail No. 45161-Z-A. Posts shall be set in class B-32 concrete footings and, once installed, the steel pipe shall be filled with concrete. Post caps shall be tack welded to the fender pipe.

All fenders shall be set plumb and true to line and grade. The distance between the fenders shall be 4'-6", with the hydrant in the center.

PAINTING: After the hydrant has been installed, the standpipe above the ground line shall be thoroughly cleaned and, with the exception of the dome, shall be given one heavy coat of quick drying black enamel paint. The dome and hydrant fenders shall receive one heavy coat of bright aluminum paint, as specified above. On the standpipe, just below the nozzles, on the roadway face of the hydrant, shall be stenciled, in white numerals five (5") inches high, the size of the water main to which the hydrant is connected. Paint for white numerals shall be an oil type paint, designed for exterior use. It shall cover solidly in one coat and dry to a satisfactory gloss.

TESTS: The Contractor shall not backfill over any pipe until directed by the Engineer. The pipe system shall be tight and show no leaks when filled with water, sealed, and subjected to an internal hydrostatic pressure of one-hundred twenty-five (125) pounds per square inch. Temporary caps shall be placed where required to permit making the tests where valves are not available. The tests shall be made in the presence of the Engineer.

MEASUREMENT AND PAYMENT: The quantity of **FIRE HYDRANTS WITH FENDERS**

to be paid for under this item shall be the number of hydrants furnished and installed in accordance with the plans and specifications to the satisfaction of the Engineer.

The price bid shall be a unit price for **EACH** Fire Hydrant with Fenders furnished and incorporated in the work complete and shall include the cost of all labor, materials, equipment and incidental expenses necessary to complete the work including unclassified excavation, concrete pad, hydrant fenders, painting, broken stone, lateral pipe, plumbing lines between shut-off valve and hydrant, shut-off valve, valve box and fittings, and testing, all in accordance with the plans and specifications, to the satisfaction of the Engineer.

Saw-cutting (if necessary), Wet Connection, and Cement Lined Ductile Iron Water Pipe from the shut-off valve to the existing water main shall be paid for under their respective contract items.

Item No.	Item	Pay Unit
PK-ESCR 615	Fire Hydrant With Fenders	EA

END OF SECTION

SECTION PK-ESCR 616 – DECORATIVE STEEL SPRAY FIXTURES DELANCEY STREET

SECTION PK-ESCR 617 – DECORATIVE STEEL SPRAY FIXTURES HOUSTON STREET

SECTION PK-ESCR 618 – DECORATIVE STEEL SPRAY FIXTURES 10TH STREET

WORK: Under this Item, the Contractor shall furnish and install **DECORATIVE STEEL SPRAY FIXTURES** (including Activation Bollard and Winterization Drainage Structure, where indicated) on concrete footings, all in accordance with the plans, specifications, and directions of the Engineer. In addition, the Contractor shall furnish extra material to the Engineer as specified under the heading INCIDENTAL MATERIALS.

MATERIALS: Except as otherwise provided for herein, all materials and methods of construction shall conform to the specifications and requirements of the NYCDOT Standard Highway Specifications.

Footings: Shall be class B-32 concrete.

Decorative Steel Spray Fixtures: Spray fixtures shall be as manufactured by Aquajeux International, Inc., Sainte-Julie, Quebec, Canada; Vortex Aquatic Structures International, Inc., Montreal, Quebec, Canada, or approved equal.

Spray fixtures shall be constructed of Schedule10, Type 304/304L stainless steel to form various features of varying heights as shown on the drawings. A variety of spray features including but not limited to water arch, water cactus, water cane, water column, etc., shall be set on a concrete foundation, at the proper elevations, as per the manufacturer's recommendations. All components shall include all anchor hardware and stainless steel fasteners.

Each fixture shall have a one inch (1") male or a one and one half inch (1-1/2") threaded female water inlet attached at a point relative to the bottom of the fixture to facilitate water hook up.

In-Ground Sprays: In-ground sprays shall be constructed of minimum Schedule10, Type 304/304L stainless steel as per the sizes shown on the drawings. Each fixture shall have a one inch (1") threaded female water inlet attached at a point relative to the bottom of the fixture to facilitate water hookup. Sprays shall be equipped with a removable brass cover and shall be set on a concrete base in the locations indicated on the plans and approved Shop Drawings.

Flush Mounted Jets: Flush mounted jets shall be constructed of 2" diameter, Schedule10 (minimum) Type 304/304L stainless steel housing threaded to accept tamper resistant brass nozzle. The nozzle shall produce a single water stream. The direction of the water stream shall be adjustable to a maximum of 25 degrees from the vertical. A special tamper resistant tool and a winter cap shall be included with the assembly. The water inlet connection shall be ¾" NPT male stainless steel. Flush mounted jets shall be set on a concrete base in the locations indicated on the plans and approved Shop Drawings.

Nozzles: Where applicable, spray fixtures shall contain either interchangeable five (5) piece solid brass nozzles, or one piece in-pipe brass nozzles, and shall be concealed in a recessed nozzle socket to ensure that all spray devices are concealed within the spray fixture. Nozzles must be of tamper resistant design, secured in the nozzle socket by means of security tooling specifically designed to fit only hardware, nozzles, and fasteners. All nozzle installation shall be performed after the thorough flushing of the entire system (see Testing). Nozzles shall be secured as per manufacturer's installation instructions to the satisfaction of the Engineer.

Coating: Fixtures shall receive a polyester powder coat, similar to that manufactured by Tiger Drylac U.S.A. Inc., or approved equal. The shop coat shall conform to manufacturer's

recommendations for surface preparation and mil. thickness of coating. The color shall be as indicated on the plans.

Activation Bollard: Where shown on the drawings, activation bollard shall be provided by the manufacturer. The bollard shall be constructed of stainless steel, Schedule 10, Type 304/304L, with powder coated external finish (see Coating). There shall be a stainless steel connection supplied for drainage.

The activator shall operate on 24V and shall be accessible by removing the activation cap or back door with a special tamper-resistant tool provided by the manufacturer of spray fixtures. There shall be an internal stainless steel conduit from the activator to the underground conduit. A reducing coupler shall be provided as needed to connect to the conduit. All wiring shall be as specified and approved by the manufacturer of spray fixtures.

Programmable Controller: The controller shall be meet the following specifications:

Time Switch: The time switch shall be a 24 Hour/ 7 Day programmable digital time switch with a 100 hour battery backup system in case of power failure. The switch shall have the ability to program a different schedule for each day of the week or have several days operate on the same schedule.

Timers: Timers shall be two solid states to activate the valves. They shall be individually set and Each has range of 0.1min to 30hours.

Transformer: Transformer shall be 120V primary/24V secondary with a built in electrostatic shield – protection.

Selector switches: Selector switches shall be three positions to select among automatic manual and off mode.

Enclosure: Enclosure shall be watertight fiber reinforced electrical enclosure with quick release latches that can be secured with a padlock.

Solenoid Valves: The Solenoid valves shall be a normally closed 24 VAC, 50/60 Hz, solenoid actuated glove pattern with a balanced pressure diaphragm as manufactured by Rain Bird Sprinkler Corp., Glendora, California or approved equal.

The valve shall have a manual flow control for manual opening and closing the valve without electrically energizing the solenoid. The valve shall have a flow range of 5 to 40 GPM for 1” diameter and 20 to 130 GPM for 1 ½” diameter. The operating pressure shall be 15 to 220 PSI. At 24AVC average, inrush current shall not exceed 0.41 amps. Average holding current shall not exceed 0.23 amp. The valve body and bonnet shall be constructed of brass and all other internal parts shall be made of bronze and stainless steel to ensure corrosion resistance.

Flow Distribution Manifold: The manifold shall be constructed of three (3”) inch, Schedule 10 (minimum) Type 304/304L stainless steel pipe, with female threading at both ends. Unit shall be factory assembled and water pressure tested. It shall be equipped with pressure gauge, mounting brackets and anchor bolts for mounting on a concrete wall.

Copper Tubing: The water service pipe shall be hard temper Type "K" copper tubing meeting the Department of Purchase Specification No. 32-T-1.64 and ASTM No. B88-1974. All tubing and fittings shall be as specified and paid for in the 'Copper Tubing' Item. Copper tubing and fittings are to be supplied from valves on the water supply line to the fixtures, with the connection at the fixture to be made with a dielectric coupling.

Fittings: Fittings shall be approved red brass Class "A" threadless type, containing no less than eighty five percent (85%) copper, adaptable for copper tubing.

Joints: Joints shall be made by soldering, using 95-5 tin antimony solder.

Hardware: All hardware, fittings, and fastenings shall be as indicated on the shop drawings and as required to complete the installation. Lag bolts shall be of best quality stainless steel with sideslot flat type vandal proof head in the sizes indicated on the plans. Anchors shall be stainless steel in the sizes required. Tamper proof hardware shall be stainless steel.

Exterior Control Wires: Control wires shall be 24-volt solid wires approved for installation in conduit and in accordance with Section D “Special Electrical Work and Equipment”. Minimum wire size: 14 gauge; 12 gauge for common wire.

PVC Conduit for Control Wiring: All underground exterior 24 volts control wiring for activation bollard shall be installed in PVC rigid (non-metallic) conduit with fittings. The conduit shall be manufactured to NEMA TC-2 Federal Specifications and UL 651 Specifications. The cement for PVC rigid conduit shall be approved equal to all weather quick set cement (5° – 100°F) Series VC9981 through VC9984. All conduit shall requirements set for in Section D “Special Electrical Work and Equipment”.

Sleeves For Control Wires: Sleeves shall be installed under all walks and paving and where indicated on drawings. Sleeves shall be PVC schedule 40 or galvanized heavy wall steel pipe conduit, as shown on the drawings.

Winterization Drainage Structure: The materials and construction shall be in accordance with ASTM C913 ‘Standard Specification for Precast Concrete Water and Wastewater Structures’, as shown on the plans, or approved equal.

Concrete for Winterization Drainage Structure: All concrete shall fulfill the material requirements of Section ESCR-4.06, except that compressive strength shall be 5,000 psi at 28 days. All precast concrete shall have a honed finish. The precast concrete shall be well cured, shall be dense and shall have good edges. The cement and aggregate shall be thoroughly mixed in a proportion of one (1) part Portland Cement to not over six (6) or less than four (4) parts of aggregate. The aggregate fine and course shall conform to ASTM C-33. Aggregate shall be free of all deleterious substances which cause reactivity with oxidized hydrogen sulfides. Aggregate shall be graded to produce a homogeneous concrete mix.

Reinforcement for Winterization Drainage Structure:

Steel Fabric Reinforcement: Steel fabric shall meet the requirements given for cold drawn steel wire for concrete reinforcement, sample shall be taken as directed by the Engineer. All steel fabric (welded wire reinforcement) shall meet ASTM Specification A-1064, latest revision.

Steel fabric shall consist of longitudinal members with transverse members at right angles thereto. All points of intersection of the members shall be firmly connected in approved manner.

All steel fabric shall be delivered in flat sheets or rolls of such widths as to fit the concrete pavement slabs as shown on the plans.

All outside wire shall not be more than three inches (3") from edges of slabs; when the sheets or rolls are not full length or width they shall overlap at least six inches (6"). All bars shall be bent cold. Only competent mechanics shall be employed for cutting and bending, and proper appliances shall be provided for such work.

Steel Bar Reinforcement: The reinforcement shall be bent to the shapes shown on the plans. Bends for stirrups and ties shall be made around a pin having a diameter not less than two times the minimum thickness of the bar. Hooks shall conform to Section C-26-1526.0, N.Y. City Building Code. Bends for other bars shall be made around a pin having a diameter not less than six times the minimum thickness of the bar, except that for bar larger than one inch the pin shall not be less than eight times the minimum thickness of the bar.

Reinforcement shall be formed to the dimensions indicated on the plans before it is embedded in the concrete.

Before any concrete is placed, all mortar shall be cleaned from the reinforcement. No concrete shall be poured until the Engineer has inspected the placing of the reinforcing metal and permission to place concrete is granted. All concrete placed in violation of this provision shall be rejected and removed.

Top slab for Winterization Drainage Structure: Shall be eight inch (8") thick reinforced concrete. Top slab shall be of size shown on the Drawings and shall accommodate access door.

Frame and Door for Winterization Drainage Structure: The access doors should be as manufactured by "BILCO DOORS", stainless steel Double Door. The double door should be #JD-3H20, Size 48" H x 72" L x 6" D or approved equal.

Ladder Runs for Winterization Drainage Structure: Ladder rungs for each precast detention tank shall be constructed of copolymer polypropylene plastic manhole steps as manufactured by M. A. Industries, or approved equal.

Incidental Work for Winterization Drainage Structure: The Contractor shall furnish materials for and do all incidental work to complete the structures including the work of providing openings for piping and setting and adjusting the frames. No additional payment will be allowed for any incidental work.

Waterproofing for Winterization Drainage Structure: The detention tank shall have internal waterproofing, provided by the precast manufacturer and is subject to approval by.

the Engineer, the Contractor shall receive the unit price bid.

Drain Ball Valves for Winterization Drainage Structure: The Winterization Drain Valves should be 150 psig WSP, 600 psig WOG, 2-piece bronze body, solid blow-out proof stem, teflon seats, chrome plated brass ball, teflon seals, corrosion resistant steel lever handles with vinyl grips, balancing stop, and threaded or solder ends. Acceptable Manufacturers: Conbraco, Hammond, Milwaukee, Nibco, and Watts or approved equal. **EXECUTION:**

Excavating for Foundation: All excavation shall be cut accurately to required lines and dimensions for work on drawings, and shall be large enough to provide adequate clearance for the proper execution of the work within them.

Cast in Place Footings Inspection: When the excavation has been carried to the required depth, as shown on the drawings, the Contractor shall do no more work until after the inspection by the Engineer, who shall order the foundation work to proceed, or further excavation as the conditions indicate, and no other work shall be done until the excavation has been approved by the Engineer.

Forms: Forms for footings shall be lined with exterior grade plywood. The formwork shall be coated with an approved oil or lacquer.

Curing: All finished concrete shall be protected and kept moist continuously for three days, as directed by the Engineer.

Water Feature Fixtures: Spray fixtures shall be installed in accordance with the manufacturers written directions. Entire assemblies shall be installed in accurate locations, square and plumb on concrete footings and in required locations to surrounding finished grade, as shown on the plans. Anchor bolts shall be accurately set, plumb and true, in concrete footings, using templates supplied by the manufacturer.

Electrical work: A Licensed Electrician shall perform all electrical work as per The S-Pages, Article 20. This includes the connection of the power supply and activation bollard to the controller. All field wiring shall be waterproof with heat shrink-wrapping.

Field Connection: All field connections to be made by a Licensed Master Plumber, as per the S-Pages.

Testing: Before backfilling, the entire system shall be pretested and inspected. This shall include maintaining full pressure on the entire system for no less than one hour. Following the pressure test, it is imperative that all components be flushed by running the water supply through the fixture for a period of time to ensure all debris has been removed from the entire system prior to installation of any nozzles and in the presence of the Engineer. Nozzles shall be secured to the spray fixtures utilizing the security tooling provided by the manufacturer and all work shall be performed to the satisfaction of the Engineer. After paving is completed, all nozzles shall be adjusted and secured for proper operation and spray patterns, to the satisfaction of the Engineer.

M&O Orientation and Demonstration: After testing is completed and approved by the Engineer, a orientation and demonstration session shall be held for the NYCDPR M&O staff. The installed spray feature system shall be demonstrated for the district M&O Staff. The demonstrations shall include manual and automatic operations. The demonstration shall also include identification and operation of each component, trouble shooting for each component, winterizing the system, removal and replacement of defective components, general and specific requirements for system maintenance, and a check list for frequent attention of components. Highlights of the demonstration, including identification of components shall be videotaped for future M&O orientation.

O&M Manual and Video: The Contractor shall furnish six (6) copies (see Submittals) of the O & M Manual (Operation & Maintenance Manual) for the spray shower system and the associated mechanical system. The manual shall include a checklist for trouble shooting and corrective measures in addition to operation and maintenance instructions. The Contractor shall also furnish an instructional video (DVD or USB) of highlights of the M&O Orientation and Demonstration, including identification of components of the spray shower system.

INCIDENTAL MATERIALS: The Contractor shall furnish (furnish only, not install) and deliver, to the Engineer, incidental materials obtained from the approved spray equipment manufacturer. Contractor shall also furnish to the Project Resident Engineer any catalogs, invoices, statements, etc. for verification that a complete set of all maintenance and operations manuals, Repair Kit tools, materials, etc. have been furnished. All furnished material shall be properly identified with the installation location. Incidental materials shall include the following:

1 (One) - Tools and Hardware Maintenance Repair Kit, complete with toolbox, fastener, tamper resistant tool wrenches for each nozzle size included with the equipment. The repair kit shall be clearly marked with the Contract Number and the Playground name. Marking shall be done with permanent marker or other method approved by the Engineer.

One (1) – Winterizing Caps EACH In-Ground Spray installed shall be provided if these spray features are included in the equipment.

SUBMITTALS: All submittals shall be submitted prior to manufacture and in accordance with the requirements of the S-Pages.

Shop Drawings for Spray Fixtures: The Contractor shall submit Shop Drawings of the spray fixtures (including spray nozzles and colors), activation bollard, programmable controller, solenoid valve, flow distribution manifold for approval.

Shop Drawings for Winterization for Drainage Structure: The Contractor shall submit Shop Drawings and catalog cuts, including concrete structure, frame, door, drain valves, joints, waterproofing, and sealing the pipes extending through the wall of the structure.

Operation and Maintenance Manual: The Contractor shall furnish an Operation and Maintenance (O & M) Manual prepared in conjunction with the manufacturers of equipment in this specification. The O & M manual shall contain the following:

1) Description of system operation and operating modes.
2) Start-Up Procedures.
3) Troubleshooting and Repair Guide.
4) List of parts with their model numbers.
5) Electrical diagram showing the valve assembly, the controller, the activation bollard, the power supply, and all operating switches.
6) O & M Manual & Video: The six (6) copies of the Operation & Maintenance Manual and one (1) instructional video (all labeled with name of site and contract number) shall be distributed by the Engineer as follows:

   One (1) laminated manual to be kept at the site, either in the equipment room or in the equipment vault.
   One (1) O&M manual and one (1) instructional video to DPR Training Academy (contact- Michael Crescenzo 718-760-6588).
   Two (2) manuals to Borough Supervisor of Mechanics (S.O.M.).
   Two (2) manuals to Construction division (file, map file).

MEASUREMENT AND PAYMENT: For furnishing and installing all **DECORATIVE STEEL SPRAY FIXTURES** (including Activation Bollard and Winterization Drainage Structure, where indicated) complete, in accordance with the plans, specifications, and directions of the Engineer, the Contractor shall receive the **LUMP SUM** price bid.

The price bid shall be a **LUMP SUM**, and shall include the cost of all labor, materials, equipment, and incidentals necessary or required to complete the work including unclassified excavation, backfill, concrete footings, hardware, fittings, dielectric coupler, activation bollard, programmable controller, control panel, solenoid valves, drain valves, flow distribution manifold, Electrical conduit & control wiring (from electrical panel to activation bollard), testing, orientation and all components integral with the spray fixtures, in accordance with the plans and specifications, to the satisfaction of the Engineer.

The Engineer will retain ten (10%) of **DECORATIVE STEEL SPRAY FIXTURE(S)** bid amount until the Contractor completes the requirements of the Testing, M&O Orientation and Demonstration, and O&M Manual and Video sections of this specification, to the satisfaction of the Engineer.

In addition, the Contractor shall deliver INCIDENTAL MATERIALS as outlined above to the Engineer. No additional payment shall be made for incidental materials. The Contractor shall include cost in the bid price

Backflow Preventer, Water Meter, Booster Pump, Copper Tubing, Gate Valves, Globe Valves, Valve Boxes, Broken Stone and Electric service to the panel, where applicable, shall be paid for separately under their respective Contract Items.

Item No.	Item	Pay Unit
PK-ESCR-616	DECORATIVE STEEL SPRAY FIXTURES – DELANCEY ST.	L.S.
PK-ESCR-617	DECORATIVE STEEL SPRAY FIXTURES – HOUSTON ST.	L.S.

PK-ESCR-618 DECORATIVE STEEL SPRAY FIXTURES– 10TH ST. L.S.

END OF SECTION

SECTION PK-ESCR 619 – SPORTS STEEL SPRAY FIXTURE

WORK: Under this Item, the Contractor shall furnish and install a hydraulic **SPORTS STEEL SPRAY FIXTURE** with concrete footing, all in accordance with the plans, specifications, and directions of the Engineer. In addition, the Contractor shall furnish incidental material to the Engineer as specified under the heading INCIDENTAL MATERIALS.

MATERIALS: Except as otherwise provided for herein, all materials and methods of construction shall conform to the specifications and shall meet the requirements of the NYCDOT Standard Highway Specifications.

Concrete Footings: Concrete for footings shall be 3,200 psi Average Class B-32 Concrete per the NYCDOT Standard Highway Specifications.

Sports Steel Spray Fixture: Sports steel spray fixture shall be activated by a mechanical push button, constructed of Schedule10, Type 304L stainless steel tubing, six (6") inches O.D. The sports spray fixture shall be set in a concrete footing, at the proper elevations, as shown on contract plans. The Sports spray fixture shall be eighty-four (84") inches in height from finish grade and welded to a three-eighth (3/8") inch thick stainless steel plate for anchoring into concrete footing. The Sports Spray Fixture shall be provided with a 3/4" NPT female threaded coupling for connection to water supply.

Sports spray fixtures shall be manufactured by Aquajeux International, Inc., Quebec, Canada, or approved equal and shall be one of the following models as shown on the contract plans or as directed by the Engineer:

- Model 1506-MALF-09 – Recommended for installation in asphalt pavement, natural turf, or other paved areas. Equally distributed nine (9) low flow Super Mist nozzles located, at 40 degrees, at the top of a 12.75" outer diameter spray head. o Model 1506 - MALF-06 – For installation against wall or fence only. Total of six (6) Super Mist nozzles, at 40 degrees, located at the top of the spray head and sprayed along one side of the post.
- Model 1507 - MALF -09 – Recommended for installation in synthetic turf, spray shower areas, or other free draining areas. Total of nine (9) low flow Super Mist Nozzles located nine (9") inches apart vertically in three levels. All nozzles shall be spaced evenly and offsets each other.
- Model 1507 - MALF-08 – For installations against wall or fence only. Total of eight (8) Super Mist nozzles located nine (9") inches apart vertically in three levels. All nozzles shall be offset and sprayed along one side of the post.

Nozzles: Nozzles shall be made of brass and built recessed into the structure body. Each nozzle shall achieve a maximum flow rate of 2.1 GPH at a water pressure of 20 psi. Nozzles shall be manufactured by Aquajeux International, Inc., or approved equal.

Coating: The Sports Spray Fixture shall receive one UV resistant, non-toxic, lead free electrostatic powder color coating and one non-toxic, lead free, electrostatic powder clear coating. Color of the sports spray fixture shall be "Red" or another contrasting color to surrounding turf or pavement, as noted on the contract plans or directed by the Engineer.

Pneumatic Activated Valve: Push button for activation shall be Aquajeux Add-on for Mechanical Push-button Model No. "MECPB", or approved equal. Push button shall be factory assembled and integrated to the fixture. Access door to permit access to the valve shall be located at the side of the spray post, protected by stainless steel, tamper resistant screws. Activation time

shall be adjustable from thirty (30) seconds to one hundred and twenty (120) seconds. Exact activation time shall be as directed by the Engineer.

Copper Tubing: The water service pipe shall be hard temper Type "K" copper tubing meeting the Department of Purchase Specification No. 32-T-1.64 and ASTM No. B88. All tubing and fittings shall be as specified and paid for in the contract item for 'Copper Tubing'. Copper tubing and fittings are to be supplied from valves on the water supply line to the post, with the connection at the fixture to be made with a dielectric coupling.

Fittings: Fittings shall be approved red brass Class “A” threadless type, containing no less than eighty five (85%) percent copper, adaptable for copper tubing

Hardware: All hardware, fittings, and fastenings shall be as indicated on the shop drawings and as required to complete the installation. Anchor bolts shall be stainless steel in the sizes required. Tamper proof hardware shall be stainless steel.

EXECUTION:

Excavating for Foundation: All excavation shall be cut accurately to required lines and dimensions for work on drawings, and shall be large enough to provide adequate clearance for the proper execution of the work within them.

Cast in Place Footings Inspection: When the excavation has been carried to the required depth, as shown on the drawings, the Contractor shall do no more work until after the inspection by the Engineer, who shall order the foundation work to proceed, or further excavation as the conditions indicate, and no other work shall be done until the excavation has been approved by the Engineer.

Forms: Forms for footings shall be lined with exterior grade plywood. The formwork shall be coated with an approved oil or lacquer.

Curing: All finished concrete shall be protected and kept moist continuously for three days, as directed by the Engineer.

Sports Steel Spray Fixture: The sports spray fixture shall be installed in accordance with the manufacturer’s written directions. Entire assemblies shall be installed in accurate locations, square and plumb in concrete footings and in required locations to surrounding finished grade, as shown on the plans. Anchor bolts shall be accurately set, plumb and true, in concrete footings, using templates supplied by the manufacturer. Concrete footings shall be below finish grade unless otherwise shown on the contract plans.

Field Connection: All field connections to be made by a Licensed Plumber.

Testing: Before backfilling, the entire system shall be pretested and inspected. This shall include maintaining full pressure on the entire system for no less than one hour. Following the pressure test, it is imperative that all components be flushed by running the water supply through the fixture for a period of time to ensure all debris has been removed from the entire system prior to installation of any nozzles and in the presence of the Engineer. Nozzles shall be secured to the spray post utilizing the security tooling provided by the manufacturer and all work shall be performed to the satisfaction of the Engineer. Where appropriate, the Contractor shall winterize the system prior to turning over the site as directed by the Engineer.

Manufacturer’s Orientation and Demonstration: After testing is completed and approved by the Engineer, an orientation and demonstration session shall be held for the NYCDPR M&O staff. The session shall be performed by the manufacturer of the sports spray fixture. The demonstration shall include identification and operation of each component, trouble shooting for each component, winterizing the system, removal and replacement of defective components,

general and specific requirements for system maintenance, and a check list for frequent attention of components.

INCIDENTAL MATERIALS: The Contractor shall furnish (furnish only, not install) and deliver, to the Engineer, incidental materials obtained from the approved sports spray fixture manufacturer. Contractor shall also furnish to the Engineer any catalogs, invoices, statements, etc. for verification that a complete set of all maintenance and operations manuals, materials, etc. have been furnished. All furnished material shall be properly identified with the installation location. Incidental materials shall be the following:

1 (One) - Tools and Hardware Maintenance Repair Kit, complete with toolbox, fastener, tamper resistant tool wrenches for nozzle included with the equipment. The repair kit shall be clearly marked with the Contract Number and the name of Park. Marking shall be done with permanent magic marker or other method approved by the Engineer.

SUBMITTALS: All submittals shall be in accordance with the requirements of the S-Pages.

Shop Drawings: The Contractor shall submit Shop Drawings of the sports steel spray fixture showing all connection details, nozzle type and sizes for approval prior to manufacture. Contractor must demonstrate that the nozzle is appropriate for the flow rate and water pressure specified.

Operation and Maintenance Manual: The Contractor shall furnish an Operation and Maintenance (O&M) Manual prepared in conjunction with the manufacturers of equipment in this specification. The O&M manual shall contain the following:

1) Description of system operation and operating modes.
2) Start-up procedures.
3) Troubleshooting and Repair Guide.
4) List of parts with their model numbers.
5) M&O Manual: The six (6) copies of the Operation & Maintenance Manual shall be distributed by the Engineer as follows:
   - One (1) laminated manual to be kept at the site, either in the equipment room or in the equipment vault.
   - One (1) O&M manual to DPR Training Academy (contact- Michael Crescenzo 718-760-6588).
   - Two (2) manuals to DPR Borough Supervisor of Mechanics (S.O.M.).
   - Two (2) manuals to DPR Construction division (file, map file).

MEASUREMENT AND PAYMENT: For each **SPORTS STEEL SPRAY FIXTURE** furnished and installed in accordance with the plans, specifications, and directions of the Engineer, the Contractor shall receive the unit price bid.

The price bid shall be a unit price for **EACH** Sports Steel Spray Fixture, and shall include the cost of all labor, materials, equipment, and incidentals necessary or required to complete the work including excavation, backfill, concrete footing, hardware, fittings, pneumatic activation valve, drain valves, testing, orientation session, submittals, all components integral with the sports spray and copper tubing within five (5') feet from the edges of the sports spray fixture, all in accordance with the plans and specifications, to the satisfaction of the Engineer.

Backflow Preventer, Water Meter, Copper Tubing beyond five (5') feet of the fixture, all valves and Valve Boxes, where required, shall be paid for separately under their respective Contract Items

Item No.	Item	Pay Unit
PK-ESCR 619	Sports Steel Spray Fixture	EA

END OF SECTION

SECTION PK-ESCR 620 – WATER TAP 1½" DIA.

SECTION PK-ESCR 621 – WATER TAP 2" DIA.

WORK: Under these Items, the Contractor shall make a **WATER TAP** or **WET CONNECTION** of the size shown on the plans, to the existing water main in accordance with the plans, specifications, and directions of the Engineer. The Contractor shall obtain a permit from NYCDEP, saw cut pavement, prepare opening, abandon, disconnect, cap, or plug any existing water service from the existing water main in accordance with the Rules of the Bureau of Water Supply, arrange NYCDEP installation, arrange inspection (where required) prior to backfilling and restore street pavement.

PERMITS: The Contractor shall employ a licensed Certified Master Plumber to obtain a permit from the New York City Department of Environmental Protection (NYCDEP) (NYCDEP). All permits for work requiring opening or obstructing a street and/or sidewalk shall be contingent on approval by the Department of Transportation (DOT) or the agency having jurisdiction to authorize such opening. All permits shall be displayed at the work site.

MATERIALS & EXECUTION: The Contractor shall notify the Engineer three (3) days prior to intended date of work. Water taps and wet connections to a City Main shall be inserted or installed only by NYCDEP employees, unless waived by NYCDEP. The Contractor shall set up appointment with NYCDEP and pay all NYCDEP fees under this item. The Contractor shall erect proper barricades and all other protective devices in strict compliance with City ordinances governing the protection of the public. All materials, excavation, saw cutting, and restoration of street pavement (where applicable) shall be performed in accordance with NYCDEP and New York City Department of Transportation requirements. Size of excavation for water tap or wet connection shall be in accordance with the requirements of NYC Department of Environmental Protection "Rules governing and Restricting the Use and Supply of Water" Appendix Table #4 and Detail Figure No.1. If subsurface conditions prevent a plumber from making an excavation of the dimensions indicated therein, the plumber shall immediately notify the Engineer. The Engineer, in turn shall notify NYCDEP, who has the discretion to determine whether the dimensions should be changed, and what the new dimensions for the excavation shall be. Where excavations are required to be larger than Appendix Table #4, such excavation shall be paid separately under the item “Unclassified Excavation". All excavations shall be made safe by sheeting and bracing, where depth of excavation exceeds five (5) feet. Hand excavate as necessary to protect underground utilities. Arrange for inspection by NYCDEP (where necessary) prior to compacting backfill in six (6") inch lifts and street pavement restoration.

INSPECTION: Where required by NYCDEP, the connection shall be inspected prior to backfilling.

MEASUREMENT AND PAYMENT: For each **WATER TAP** or **WET CONNECTION** made in accordance with the plans, specifications, directions of the Engineer and provisions of the NYCDEP permit, the Contractor shall receive the unit price bid.

The price bid shall be a unit price for **EACH** Water Tap or Wet Connection made and shall include furnishing all labor, material, equipment, and incidental expenses including obtaining permits, saw cutting, gooseneck connection for copper water tubing, unclassified excavation and/or hand excavation as required, all fees to NYCDEP, backfilling and compaction to complete the work in accordance with the plans and specifications, to the satisfaction of the Engineer.

Excavation beyond what is required by NYCDEP Appendix Table #4, Cap water line, Maintenance and protection of traffic, Restoration of Street Pavement, water line beyond the

gooseneck connection, and Temporary Sheeting (where applicable) shall be paid under separate contract items.

Item No.	Item	Pay Unit
PK-ESCR-620	Water Tap 1½” DIA.	EA
PK-ESCR-621	Water Tap 2" DIA.	EA

END OF SECTION

SECTION PK-ESCR 622 – CURB AND PROPERTY LINE VALVES – 1½" DIA.

SECTION PK-ESCR 623 – CURB AND PROPERTY LINE VALVES – 2" DIA.

WORK: Under this Item, the Contractor shall furnish and install **CURB & PROPERTY LINE VALVES** set of the size shown on the plans, in strict accordance with the plans, specifications, and directions of the Engineer. Each set shall consist of one curb valve and one adjacent property line valve.

INTENT: The Property Line Valve is intended for use as an on-site, shut-off valve to decrease use of the Curb Valve, and shall be located in an accessible area inside the Park's property line.

CURB VALVES: "The curb valves and boxes shall be set in the service pipe in the sidewalk area at the curb or within 2 ft. of the curb. Curb valves shall be of the gate type nonrising stem valve, designed for a minimum of 150 psi wwp." [NYC Building Code: RS16, P107.2(a) 9 and NYC DEP Rules and Regs. Section 138]. Valves shall be Stockham No. LFB-103; Nibco T113-LF; Milwaukee UP105, or approved equal. Curb Gate Valves shall have bronze body, bronze bonnet, inside screw, non-rising stem, solid wedge disk, and threaded ends.

EFFECTIVE JAN. 4TH, 2014, ALL PROPOSED INSTALLATIONS/ REPAIR OF VALVES TO BE UTILIZED ON ALL DOMESTIC DRINKING WATER SERVICES FOR HUMAN CONSUMPTION, MUST BE LEAD-FREE IN COMPLIANCE WITH THE AMENDED FEDERAL LAW, SAFE DRINKING WATER ACT (SDWA).

PROPERTY LINE VALVES: Property Line Valves two inches (2") and under shall be of the cylindrical Plug Type with a closed bottom and a top seal, fully enclosed one-quarter (1/4) turn check, straight through flow way which is resistant to turbulation of the flow stream, one piece cast bronze cylindrical plug and "T" head that aligns with the ports to provide a visual check of valve position, inside screw ends with I.P. threads, as is manufactured by Mueller Co. No. H-10283N, or approved equal. Adaptors are required for connecting to copper tubing.

OPERATING KEY: An approved operating key of proper size for each valve shall be furnished by the Contractor. However, the Contractor need not furnish more than two (2) keys for each type of valve, regardless of the quantity of valves called for in the Contract. For valves 2" diameter, the operating key shall be Stockham No. 1V437 for Stockham Valves, or the appropriate key for an approved equal valve.

SUBMITTALS: Provide Product Data including Manufacturer's catalog sheets and specifications for each valve type. List type of valves, manufacturer's model number, and size for each service application.

MEASUREMENT AND PAYMENT: The quantity of **CURB & PROPERTY LINE VALVES**

to be paid for under this Item shall be the number of **SETS** consisting of both valves of each size, furnished and installed in accordance with the plans, specifications, and directions of the Engineer.

The price bid shall be a unit price for each **SET** of **CURB & PROPERTY LINE VALVES** (two

valves) of each size, and shall include the cost of all labor, materials, equipment, and other incidentals necessary to complete the Work in accordance with the plans and specifications, to the satisfaction of the Engineer.

Excavation, Valve boxes, water piping, including the pipe between the curb and property line gate valves shall be paid for separately under their respective contract items.

Item No.	Item	Pay Unit
PK-ESCR-622	Curb & Property Line Valves- 1 1/2" DIA.	SET
PK-ESCR-623	Curb & Property Line Valves- 2" DIA.	SET

END OF SECTION

SECTION PK-ESCR 624 – RPZ & WATER METER W/REMOTE AND STRUCTURE – 1½" DIA.

SECTION PK-ESCR 625 – RPZ & WATER METER W/REMOTE AND STRUCTURE – 2" DIA.

WORK: Under these Items, the Contractor shall provide all labor, materials and equipment necessary or required to furnish and install **RPZ and WATER METER W/ REMOTE & STRUCTURE** of the size indicated on the Contract Drawings, including all piping, fittings, valves, test tee, and test tee valve, if required and other incidentals necessary to complete plumbing work and connection to water service and water feed lines in accordance with the plans, specifications, and directions of the Engineer. RPZ (Reduced Pressure Zone) device is a type of Backflow Preventer. Water Meter W/ Remote Reader shall include Water Meter, Water Meter Strainer and Automatic Reading & Billing System (also known as Remote Reading Device). All factory plumbing work is to be done by a Licensed Plumber. All on-site plumbing work is to be done by a New York City Master Licensed Plumber.

EFFECTIVE JAN. 4TH, 2014, ALL PROPOSED INSTALLATIONS/ REPAIR OF BACK FLOW PREVENTER (BFP) DEVICESAND ALL ASSOCIATED VALVES TO BE UTILIZED ON ALL DOMESTIC DRINKING WATER SERVICES FOR HUMAN CONSUMPTION, MUST BE LEAD-FREE IN COMPLIANCE WITH THE AMENDED FEDERAL LAW, SAFE DRINKING WATER ACT (SDWA).

DEP APPROVED PLANS: The RPZ/Water Meter installation plans have been submitted to the NYC Department of Environmental Protection (DEP), Bureau of Water and Sewer Operation's (BWSO) Cross Connection Control Unit for approval. No work shall be done prior to receiving DEP approval of the aforementioned plans. Upon receiving approval, the plans shall be provided to the Contractor as a Supplemental Drawing, on or about the Order-to-Work (OTW) date.

To complete work under this item, the Contractor shall pay for the DEP Review Fees, including but not limited to the Backflow Prevention Device Review Fee, under the contract item "ALLOWANCE FOR DEP BPD REVIEW FEE". Checks shall be made payable to the New York City Water Board.

MATERIALS: Unless otherwise provided for herein, all materials and methods of construction shall conform to the requirements of the NYCDOT Standard Highway Specifications. Entire unit shall be fabricated and installed in accordance with this specification and Contract Drawings.

Precast Concrete Structures: Enclosure structures for the RPZ and water meter shall be as manufactured by A.C. Miller Concrete Products Inc., Spring City, PA., or approved equal.

Concrete: All concrete shall fulfill the material requirements Class A-40 concrete per NYCDOT Standard Highway Specifications Section 3.05,, except that compressive strength shall be 5,000 psi at 28 days. All precast concrete shall have a honed finish. The precast concrete shall be well cured, shall be dense and shall have good edges. The cement and aggregate shall be thoroughly mixed in a proportion of one (1) part Portland Cement to not over six (6) or less than four (4) parts of aggregate. The aggregate fine and course shall conform to ASTM C-33. Aggregate shall be free of all deleterious substances which cause reactivity with oxidized hydrogen sulfides. Aggregate shall be graded to produce a homogeneous concrete mix. All exposed concrete edges shall be finished with a forty-five (45°) degree, three-quarter (3/4") inch chamfer.

Coating For Concrete: Above grade portion of precast concrete boxes shall be patched to conceal holes and then receive one (1) coat of a 100% acrylic polymer coating with a pebble

finish similar to Color Coat #3107, as manufactured by BASF Senergy, Florham Park, NJ or approved equal. Color to be Sage.

Reinforcement: Steel reinforcement shall conform to the provisions of the NYCDOT Standard Highway Specifications. Reinforcement shall be placed as shown on the drawings.

Ladder Rungs: Ladder rungs for each water meter structure shall be constructed of copolymer polypropylene plastic, as manufactured by M.A. Industries, Peachtree City, Ga., or approved equal.

RPZ Structure Access Doors: Shall be high security flat plate stainless steel, single leaf, similar to JustSet Doors as manufactured by Pennsylvania Insert Corp., Spring City, PA, or approved equal. The two (2) types of RPZ Structure Access doors are as follows:

Two (2) vertical 30" x 24" (hinged) high security stainless steel access doors, painted. One (1) Horizontal 12" x 24" (no hinges) high security stainless steel access door, painted.

Stainless steel doors for RPZ structure shall be painted with one primer coat and one finish coat. All three doors shall be cleaned with solvent to remove oil, grease, dirt and other foreign material, then primed with a low VOC, water based wash primer, free of heavy metals and mineral acids, similar to DTM Wash Primer as manufactured by Sherwin Williams Protective & Marine Coatings, Edison, NJ or approved equal. Finish coat shall be high gloss enamel paint similar to Industrial Enamel HS (B54Z-400 series) as manufactured by Sherwin Williams Industrial Coatings, Edison, NJ or approved equal. Color to be Sage to match coating for concrete.

Water Meter Structure Access Door: Access door shall be 36" x 30" size, heavy duty (H20 loading) high security, color (brown) anodized aluminum, similar to JustSet Door as manufactured by Pennsylvania Insert Corp., Spring City, PA, or approved equal. Frame shall have integral drain channel, anchor flanges, and neoprene gasket. A one-and-one half inch (1 1/2") drain coupling shall be located on the corner of the frame. Operation shall be spring assisted for easy operation. A hold open arm shall automatically lock the door in the 90□ position. Hinge shall be heavy forged brass with a stainless steel pin. Door shall be provided with two locks. Lock shall be “Ford” lifter worm lock with waterworks bronze pentagonal bolt type “LL”. All hardware shall be zinc or cadmium plated.

Construction Accessories: Frames shall be 3/16" x 2" x 2" angle welded with joints ground smooth, after fabrication. Hinges shall be heavy duty and welded to door and frame.

Security Bolts for RPZ Structure doors: Security Bolts for RPZ Structure shall be NYC DPR pattern # 83 registration # "116183", Part # H11777155, as manufactured by McGard, Orchard Park, NY, or approved equal. Threads for security bolts shall be at least one-third (1/3) bolt dia. for proper "bite". Vertical doors shall have two (2) security bolts; 7/16 - 20 x .750. Horizontal door for RPZ structure shall have four (4) security bolts; 7/16 - 20 x .750. For security reasons, one security bolt key for each RPZ installed shall be shipped by McGard directly to the attention of: The Administrative Assistant to the Director of Engineering, NYC Parks Olmsted Center, Corona, NY 11368. Under no circumstances shall the Contractor be provided with a key.

Security bolts for Water Meter Structure Horizontal Access Door: Security bolts for Water Meter

Structure Horizontal Door shall be two (2) pentahead security bolts. Special Design Criteria For Security Bolts:

1) Bolt must be made from alloy steel, heat treated to 150,000 psi tensile strength.
2) Head of bolt must be selectively hardened to Rc 60 min. to prevent the use of files, hacksaws, and chisels.

3) Bolt is to be made with either a flat or 120° cone seat as required.

4) Bolt will be torqued by means of a recessed curvilinear ("Daisy") groove in the top face of bolt head. A special mating key is required to operate in groove for installation and removal of bolt.

5) Bolts are to be zinc nickel plated in order to meet an ASTM B-368 C.A.S.S. test for 22 hours.

6) Bolt lengths are to be held to +/- .01".

7) Bolt threads are to be class UNC-2A.

Water Piping: Shall be hard temper type 'K' copper tubing meeting the Department of General Services; Division of Municipal Supplies, Dept. of Purchase, Specification No. 32-T-1.64 and ASTM No. B88-1974. Fittings shall be approved wrought copper and bronze solder -joint pressure fittings (ANSI B 16.22).

RPZ: The RPZ device shall be Febco Model LF825YA, or approved equal. Size shall be as indicated on the Contract Drawings and shall fit inside the precast concrete structure as shown on Contract Drawings. The RPZ shall meet the requirements of American Society of Sanitary Engineers (ASSE) Standard 1013 and the American Water Works Association (AWWA) Standard Code 506-78. RPZ shall be lead free in compliance with the amended Federal Law Safe Drinking Water Act (SDWA).

The RPZ shall consist of two independently operating center guided, spring loaded, "Y" pattern check valves and one hydraulically dependent differential relief valve. Mainline valve body and caps including relief valve body and cover shall be bronze. Check valve and relief valve components shall be constructed so they may be serviced without removing the valve body from the line. Shut-off valves and test cocks shall be full ported resilient seated ball valves.

Gate Valves: The House Control Valve (HCV) and Valve for Test Tee shall be a Class 125, all bronze gate valve, with non-rising stem and solid disc, with screwed bonnet and threaded ends, such as Stockham Figure LFB-103, or approved equal. For water meters up to 1” size, a plain-tip (end faucet) test tee shall be used. For meters larger than 1.5”, the test tee shall be with a valve and capped.

Ball Valves: The Meter Inlet Control Valve (MICV) and Meter Outlet Control Valve (MOCV) shall be lead free, brass, full port ball valve, such as Ultra Pure UPBA400 P2, or approved equal.

Electrical Grounding: For continuity of Electrical Grounding (during RPZ Maintenance) the Contractor is to furnish and install one (1) #2 tinned copper ground conductor and copper alloy ground connectors as per O.Z. Gedney, Type ABG for 1" & 1-1/2" dia. and CG for 2" dia. pipe or approval equal. Ground work is to be done prior to any painting or insulation if needed.

Water Meter: The one (1”) inch water meter shall be Neptune T-10, as manufactured by Neptune Technology Group, Inc., Tallassee, AL, or AccuStream manufactured by Sensus, Raleigh, NC or approved equal. The one and one-half (1 ½”) inch water meter shall be Neptune T-10 manufactured by Neptune Technology Group, Inc., or Omni C^2 manufactured by Sensus or approved equal. The two (2”) inch water meter shall be Omni C^2 manufactured by Sensus or evoQ4 Electronic manufactured by Elster AMCO Water, LLC, Ocala, FL, or approved equal.

All water meters furnished shall conform to the "Standard Specifications for Cold Water Meters", AWWA Standard C700 latest revision. Only meters on the current “List of Approved Water Meters and Related Equipment”, published by NYC DEP will be accepted as an approved equal.

The size, capacity and meter lengths shall be as specified in AWWA Standard C700, latest revision. The maximum number of disc nutations is not to exceed those specified in AWWA C700 latest revision to minimize premature wear. The installation of water meters shall comply with RCNY Title 15, Chapter 20, “Rules and Regulations Governing and Restricting the Use and Supply of Water”.

Meter Maincase: All one (1”) inch meter maincase shall be the removable bottom cap type with the bottom cap secured by six (6) bolts. Bottom caps shall be interchangeable, size for size, between frost-protected synthetic polymer or cast iron and non-frost protected (bronze) models. No meters utilizing frost plugs will be accepted. Non-frost protected meters shall have bronze or synthetic polymer bottom caps. The cross section of the bottom shall break clean when subjected to freezing pressure of 600-850 psi. All maincase bolts shall be of 300 series stainless steel to prevent corrosion. Bottom cap bolt lugs shall be enclosed in the maincase and shall not have externally exposed, threaded through holes. All one and one-half (1-1/2”) inch and two (2”) inch meters shall have a split design secured by bronze or stainless steel bolts.

Register: The register shall be of the straight reading sealed magnetic drive type and shall contain six (6) numeral wheels. Registers must be sealed and dry. All direct reading register lenses shall be flat, of high strength, and impact resistant glass to prevent breakage. The dial shall be of the center sweep pointer type and shall contain 100 equally divided graduations at its periphery. The register must contain a low flow indicator with a 1:1 disc nutating ratio to provide leak detection. Register boxes shall be bronze.

All meters must be adaptable to digital encoder register without interruption of the customer's service for the purpose of pit, remote, or central meter reading. The registers shall be secured to the maincase by means of a plastic tamperproof seal pin to allow for in-line service replacement. Seal screws are not acceptable.

Register retainer rings shall have an impact resistant design which absorbs register glass lens impact. All registers shall have the size, model, and date of manufacture stamped on the dial plate.

Measuring Chamber: The measuring chamber shall be a nutating disc type, the flat nutating disc shall be molded of a non-hydrolyzing hard rubber or synthetic polymer and shall contain a type 316 stainless steel spindle. The nutating disc shall be equipped with a synthetic polymer thrust roller with a stainless steel shaft located within the disc slot. The roller head shall roll on the buttressed track provided by the diaphragm in the measuring chamber. The measuring chamber shall be of a 2-piece snap-joint type. The measuring chamber shall be made of non-hydrolyzing synthetic polymer, shall be smoothly and accurately machined and shall contain a removable molded diaphragm of the same material as that of the chamber. No screws shall be used to secure the chamber together. The control block shall be the same material as the measuring chamber and be mounted on the chamber top to provide sand ring protection. The control block assembly shall be removable to facilitate repairing. Control block assemblies shall be designed to allow no magnetic slippage which would result in a loss of revenue. The measuring chamber outlet port shall be sealed to the maincase outlet port by means of an "O" Ring gasket to eliminate chamber leak paths.

Guarantee: All meters and registers will be guaranteed for one year on material and workmanship. To ensure accuracy, each meter must be accompanied by a factory test tag certifying the accuracy at the flows required by AWWA C700 (low, intermediate, and full flow). All meters shall be guaranteed adaptable to the Neptune ARB Encoder Electronic Meter Reading Systems.

Strainer: The strainer shall be located near the inlet maincase port, before the measuring chamber and control block assembly.

Remote Reader: The Remote Reader shall be Neptune Proread ARB System ® as manufactured by Neptune Technology Group, Inc., Tallassee, AL, or ECR or Full Electronic Register as manufactured by Sensus, or Scancoder Emulation as manufactured by Elster, or approved equal. The Remote Reader shall be a self-contained encoder register metering system designed to obtain remote simultaneous water meter registration directly from the register odometer. The metering information shall be obtained through a remotely located receptacle using a compatible data capture system.

Encoder Meter Register: Shall be direct mounted with encoded odometer wheels and digital data stream. Batteries or pulses are not allowed.

Registration: The register shall provide a six digit visual registration at the meter. The unit shall, in a digital format, simultaneously encode the four or six most significant digits of the meter reading for transmission through the remotely located receptacle. (The most significant meter registration digits are defined as those digits on the register number wheels that denote the highest recorded values of water consumption.) A quick indexing mechanism shall be employed which shall prevent ambiguous reading. The register shall have a full test sweephand or dial divided into gradients of down to 1/100th of the units of registration. Register test rings shall be available for shop testing. The units of registration shall be in U.S. gallons. These units shall be clearly designated on the face of the register. The month and year of manufacture and other identification information shall appear on the face of the register. The register shall employ a leak detection indicator on the dial face. Registers using pulse generation or conversion of pulses to digital output is not permitted. Batteries shall not be required.

Mechanical Construction: Materials used in the construction of the register shall be compatible with the normal water meter environment and with each other. The unit shall possess a copper bottom and incorporate a rubber O-ring seal. Where indicated, pit set registers must be provided with moisture protection for all internal components when operating under flooded pit conditions. The register and mounting base shall be integral components and should not allow for disassembly. The register shall be attached to the meter case by a bayonet attachment. Fastening screws or nuts shall not be required. A tamperproof plastic seal pin shall be used to secure the register to the main case. No special tools shall be required to remove the register. The register head must swivel 360 degrees without removing the seal pin to facilitate visual reading and ease of wiring. The register shall be removable from the meter without disassembling the meter body and shall permit field installation and/or removal without taking the meter out of service. Provision shall be made in the register for the use of seal wires to further secure the register. Terminal screws must be accessible on the register for transmission wire connection to the remote receptacle or future connections to a telephone system.

Electrical Construction: The materials employed for contacts and connectors shall inhibit corrosion and shall suffer minimal effect from environmental conditions to which they are exposed. The number wheels used in the register assembly shall be provided with spring-type bifurcated metal contacts to ensure a high probability of information transmission.

Connection shall be made to the register by three screw-type terminals, sonically inserted into the register top. Access to the terminals shall be available to all models of register. A port cover shall be provided to cover the terminals after they have been wired. Digitally formatted data transmitted from the register shall incorporate a check sum character to verify correct information transmission and integrity. Data errors shall be indicated by the reading equipment.

Meter Reading Information: The encoder register shall provide up to six digits of information to the reading equipment. A ten digit identification number shall also be provided with each reading. The utility shall have the option to reprogram the internal register identification number an unlimited number of times. The encoder register must have the capability to provide additional

custom information to the reader. This information shall be programmed (and reprogrammed at any time) by the utility. Information on programming the register, equipment needed, and encoder meter reading output shall be provided with each proposal.

Remote Mounted Receptacle: Remote receptacle shall provide a communication link for the transmission of information from the register.

Mechanical Construction: Where indicated, a remote receptacle must be provided for attachment to a pit meter lid with another unit also designed for attachment by wall mounting. The materials employed shall be corrosion resistant, resist ultraviolet degradation, unaffected by rain or condensation, and compatible with rugged service and long life. The pit mounted receptacle shall be mounted to the water meter access door of the meter concrete structure using two screws to be provided by the utility. The hole size to be drilled in the access door shall not exceed 3/8" each. The pit mounted receptacle shall be provided with a minimum length of ten feet of wire connected and sealed at the receptacle without terminal exposure.

Electrical Construction: The receptacle construction shall incorporate the function of a cable clamp or strain relief. Design of the unit shall be such that it provides for mechanical and electrical connection between the receptacle and interrogation equipment.

Cable: The connecting cable shall be of the two-wire conductor type in a sheath which shall be abrasion and moisture resistant. Each conductor shall be color coded.

INSTALLATION:

Excavation: The Contractor shall excavate to the lines as shown in the drawings. Temporary sheeting is required in excavation for the precast concrete structure.

Temporary Sheeting: All shoring work shall meet or exceed the requirements of the New York State Department of Labor, Industrial Code Rule 23 and Title 29 Code of Federal Regulations Part 1926, Safety and Health Regulations for Construction (OSHA).

The type of sheeting and bracing shall be satisfactory to the Engineer and subject to the Engineer’s approval, but the approval by the Engineer of a method to be used does not relieve the Contractor of the Contractor’s responsibility for protection and safety.

Setting of Precast Concrete Water Meter Structure: The precast concrete water meter structure shall be set on a six (6) inch thickness of broken stone with additional stone added inside the twelve inch (12") x twelve inch (12") drain sleeve to the top of the bottom slab. The RPZ Structure shall be set on the Water Meter Structure, as shown on the Contract Drawings.

The Contractor shall install supports for the water meter at the height shown on the Contract Drawings. The meter shall be set so that the dial faces upward and is horizontal. The dial shall not be more than three (3) feet above the floor. The encoder register shall be installed on meter as per manufacturer's instructions. The remote reader receptacle shall be installed in the pit cover as per the manufacturer's directions and recommendations, allowing reading of the meter from above ground level. The Contractor to allow sufficient Water Meter Remote Reader cable slack for manhole cover removal. The RPZ shall be installed as shown on the Contract Drawings and per manufacturer's instructions.

Connections: The Contractor shall connect the water piping as shown on the Contract Drawings for complete and satisfactory operating unit to the satisfaction of the Engineer. Connections shall be made to The Water Meter by coupling union or flange union on both inlet and outlet ends of the meter and bored for sealing with holes not less that one-eight (1/8) of an inch in diameter - solder connections are not permitted. Connections to the RPZ shall be as shown on the Contract Drawings and per manufacturer’s instructions.

SUBMITTALS: Provide Product Data including Manufacturer's catalog sheets and specifications for each item type.

Shop Drawings: The Contractor shall submit Shop Drawings showing installation of the complete RPZ assembly, water meter, piping, pipe supports, precast concrete structures, doors and the coatings.

Catalog Cuts: The Contractor shall submit Catalog Cuts of the RPZ, water meter, meter reading system, control valve, and all connected piping for approval prior to installation.

Certifications: The Contractor shall be responsible for obtaining all Certification necessary to comply with the NYC Department of Environmental Protection (DEP), Bureau of Water and Sewer Operation's (BWSO) Cross Connection Control Unit for approval & the NYS Department of Health regulations for RPZ's (after installation) including:

1. Certification by Backflow Prevention Device Tester, Certification of Master Plumber responsible for the RPZ & Water Meter installation, and
2. A Professional Engineer's or Registered Architect's Certification that the installation is in accordance with the Approved Plans.

The Contractor shall be held completely responsible to ensure that all Work is in compliance with NYC form GEN-215B.

MEASUREMENT AND PAYMENT: For the furnishing and installation of **EACH** size of the **RPZ and WATER METER W/ REMOTE AND STRUCTURE** indicated, including installation of all plumbing work, certifications, etc., in accordance with the plans, specifications, and directions of the Engineer, the Contractor shall receive the unit price bid.

The price bid shall be a unit price for **EACH** size RPZ and Water Meter w/ Remote and Structure and shall include the cost of all labor, materials, equipment, and any incidental expenses necessary, including unclassified excavation, temporary sheeting, broken stone base, certifications, all plumbing work within the structure, connection to the water service at the structure; and precast concrete structure, including reinforcing steel, brick masonry, rungs, and access doors, and DEP review fee, all in accordance with the plans and specifications, to the satisfaction of the Engineer.

Copper tubing and all water service beyond the exterior face of the concrete structure shall be paid for separately under their respective contract items.

Item No.	Item	Pay Unit
PK-ESCR 624	RPZ & Water Meter w/Remote and Structure – 1½" DIA.	EA
PK-ESCR 625	RPZ & Water Meter w/ Remote and Structure - 2" DIA.	EA

END OF SECTION

SECTION PK-ESCR 626 – PLUG VALVE – 1" DIA.

SECTION PK-ESCR 627 – PLUG VALVE – 1¼" DIA.

SECTION PK-ESCR 628 – PLUG VALVE – 1½" DIA.

SECTION PK-ESCR 629 – PLUG VALVE – 2" DIA.

WORK: Under these Items, the Contractor shall furnish and install **PLUG VALVES**, of the sizes and type shown on the plans, in strict accordance with the plans, specifications, and directions of the Engineer.

PLUG VALVES: Valves two inches (2") and under shall be of the cylindrical Plug Type with a closed bottom and a top seal, fully enclosed one-quarter (1/4) turn check, straight through flow way which is resistant to turbulation of the flow stream, one piece cast bronze cylindrical plug and "T" head that aligns with the ports to provide a visual check of valve position, inside screw ends with I.P. threads, as is manufactured by Mueller Co. No. H-10283N, or approved equal. Adaptors are required for connecting to copper tubing.

EFFECTIVE JAN. 4TH, 2014, ALL PROPOSED INSTALLATIONS/ REPAIR OF VALVES TO BE UTILIZED ON ALL DOMESTIC DRINKING WATER SERVICES FOR HUMAN CONSUMPTION, MUST BE LEAD-FREE IN COMPLIANCE WITH THE AMENDED FEDERAL LAW, SAFE DRINKING WATER ACT (SDWA).

OPERATING KEY: An approved operating key of proper size for each valve shall be furnished by the Contractor, except that the Contractor need not furnish more than two (2) keys for each type of valve, regardless of the quantity of valves called for in the contract. For plug valves two inches (2") and under, the operating key shall be Mueller Co. No. H-10322N, or approved equal.

SUBMITTALS: Provide Product Data including Manufacturer's catalog sheets and specifications for each valve type. List type of valves, manufacturer's model number, and size for each service application.

MEASUREMENT AND PAYMENT: The quantity of **PLUG VALVES** of various sizes to be paid for under these items shall be the number of valves of each size, furnished and installed in accordance with the plans, specifications, and directions of the Engineer.

The price bid shall be a unit price for **EACH** valve of the type and size specified, and shall include the cost of all labor, materials, equipment, and incidental expenses necessary to complete the work, in accordance with the plans and specifications, to the satisfaction of the Engineer.

Excavation shall be paid for separately under its own item.

Item No.	Item	Pay Unit
PK-ESCR 626	Plug Valve - 1" DIA.	EA
PK-ESCR 627	Plug Valve - 1¼" DIA.	EA
PK-ESCR 628	Plug Valve - 1½" DIA.	EA
PK-ESCR 629	Plug Valve – 2" DIA.	EA

END OF SECTION

SECTION PK-ESCR 630 –TYPE "K" COPPER TUBING – 1" DIA.

SECTION PK-ESCR 631 – TYPE "K" COPPER TUBING – 1¼" DIA.

SECTION PK-ESCR 632 – TYPE "K" COPPER TUBING – 1½" DIA.

SECTION PK-ESCR 633 – TYPE "K" COPPER TUBING – 2" DIA.

SECTION PK-ESCR 638 – TYPE "K" COPPER TUBING – 3" DIA.

WORK: Under these items, the Contractor shall furnish, install and connect the water pipe of the size shown in accordance with the plans, specifications and directions of the Engineer.

PIPE: The water service pipe shall be rigid (drawn) temper type "K" copper tubing in straight lengths meeting the specification for ASTM designation No. B88.

Exception: If the distance between the water tap to the curb valve is greater than ten (10') feet or cannot be spanned with a single piece of rigid tubing, ductile (annealed) copper tubing may be installed, as approved by NYCDEP and NYCDPR.

FITTINGS: Fittings shall be approved wrought copper and bronze solder - joint pressure fittings (ANSI B 16.22), Di-Electric fittings as required.

JOINTS: Joints shall be made by soldering, using 95-5 tin antimony solder. Except from the curb valve to the water tap, joints shall be of the "flared" type.

INSTALLATION: The pipe shall be laid true to line and grade with a cover as indicated on the plans or as directed by the Engineer. When the foundation is good firm earth, the earth should be pared or molded to give a full support and if necessary a layer of fine gravel, sand or other suitable material should be placed. The same means of securing firm foundation should be adopted in case the excavation has been made deeper than necessary, in which case the Contractor shall furnish the fine gravel, sand or other suitable foundation material at the Contractor's own expense.

Where the bottom of the trench is in rock, fresh fill, soil of low bearing power or other situations where special foundations are required, the Contractor shall provide such foundation in accordance with the written order of the Engineer. The work shall be paid for at the unit prices bid for the materials used in the work.

TESTS: The Contractor shall not backfill over any pipe until ordered by the Engineer. The pipe system shall be tight and show no leaks when filled with water, sealed and subjected to an internal hydrostatic pressure of 100 psi for thirty minutes. Temporary caps shall be placed where required to permit making the tests where valves are not available. The tests shall be made in the presence of the Engineer.

MEASUREMENT AND PAYMENT: The quantity of **TYPE "K" COPPER TUBING** to be

paid for under these items shall be the number of **LINEAR FEET** (laying length), of each size, including fittings, furnished and incorporated in the work in accordance with the plans, specifications and directions of the Engineer.

The price bid shall be unit price per **LINEAR FOOT** of Type K Copper Tubing of each size and shall include the cost of all labor, materials, equipment and incidental expenses necessary to complete the work, including fine gravel or sand foundation material (where needed), in accordance with the plans and specifications to the satisfaction of the Engineer.

Excavation, water tap and restoration shall be paid for separately under their respective contract items.

Item No.	Item	Pay Unit
PK-ESCR 630	Type "K" Copper Tubing - 1" DIA.	LF
PK-ESCR 631	Type "K" Copper Tubing – 1¼" DIA.	LF
PK-ESCR 632	Type "K" Copper Tubing – 1½" DIA.	LF
PK-ESCR 633	Type "K" Copper Tubing - 2" DIA.	LF
PK-ESCR 638	Type "K" Copper Tubing – 3" DIA.	LF

END OF SECTION

SECTION PK-ESCR 634 – CAST IRON VALVE BOX, 5¼" DIA.

WORK: Under this Item, the Contractor shall furnish and install **CAST IRON VALVE BOX, 5 1/4" DIA.** in accordance with the plans, specifications, and directions of the Engineer.

MATERIALS: All materials should be as follows:

Box: 5 1/4" diameter valve boxes shall be Bingham & Taylor Fig. No. 4908 (2-Piece Sliding Type Adjustable Valve Box) with a Fig No. 4904-L locking cover, or approved equal. The cover shall have the designation "WATER" cast thereon. The boxes shall extend within the limits called for on the plans.

Setting: The valve boxes shall be set plumb, as shown on the plans, on a footing of brick laid in cement mortar, supported on a foundation of broken stone. The entire area surrounding the valve box shall be fully compacted after setting.

Brick: The brick shall be made from clay or shale, well burned, of a quality approved by the Engineer. The mortar shall be composed of one-part Portland Cement and two parts sand.

Broken Stone: The broken stone shall be clean broken traprock, or other approved stone, all of which shall pass a one-inch square opening screen and retained on a 5/8-inch square opening screen.

SHOP DRAWINGS: The Contractor shall submit Shop Drawings indicating box manufacturer, box size and material.

MEASUREMENT & PAYMENT: The quantity of **CAST IRON VALVE BOXES, 5 1/4" DIA.** to be paid for under this item shall be the number of boxes, including brick and broken stone setting bed furnished and installed in accordance with the plans, specifications, and directions of the Engineer.

The price bid shall be a unit price per **EACH** Cast Iron Valve Box and shall include the cost of all labor, materials, equipment and other incidentals necessary to complete the work, in accordance with the plans and specifications, to the satisfaction of the Engineer.

Excavation will be paid for separately.

Item No.	Item	Pay Unit
PK-ESCR-634	Cast Iron Valve Box, 5 1/4" DIA.	EA

END OF SECTION

SECTION PK-ESCR 635 – BOTTLE FILLER

SECTION PK-ESCR 636 – BOTTLE FILLER W/DOG BOWL

SECTION PK-ESCR 637 – BOTTLE FILLER W/HI-LO DRINKING FOUNTAIN BASINS

WORK: Under these items, the Contractor shall provide all labor, materials, and equipment necessary or required to furnish and install **BOTTLE FILLER** and/or **BOTTLE FILLER W/DOG BOWL** and/or **BOTTLE FILLER W/HI-LO DRINKING FOUNTAIN BASINS**,

including concrete foundation, all internal plumbing, access panels and all external plumbing work and connection to water service and drain within five feet (5') of the tubular body, all in accordance with the plans, specifications, and directions of the Engineer.

MATERIALS: Except as otherwise provided for herein, the materials shall meet the requirements of the NYCDOT Standard Highway Specifications.

Broken Stone Base: Shall consist solely of crushed ledge rock. Stone shall be no. 3 size and shall be of approved size and quality as specified in the NYCDOT Standard Highway Specifications.

Geotextile –Drainage: shall be FX-60HS (nonwoven) as manufactured by Carthage Mills, Cincinnati, OH, or 160N (nonwoven) by Mirafi, Inc., Charlotte, NC, or TerraTex N06 (nonwoven) by Hanes Geo Components, Edison, NJ, or approved equal.

Polyethylene vapor retarder: shall be a Reinforced Vapor Retarder 3-ply laminate, combining 2 layers of high-density polyethylene and 1 high strength non-woven cord grid similar to Griffolyn Type-65 as manufactured by Reef Industries, Inc., Houston, Texas or approved equal.

Concrete pad, Concrete pipe support and Cleanout: (for Bottle filler and Bottle Filler w /Dog Bowl) Concrete shall be 3,200 psi Average class B-32 Concrete per the NYCDOT Standard Highway Specifications.

Cleanout manhole cover and frame: (for Bottle filler and Bottle Filler w /Dog Bowl) shall be heavy duty cast iron per ASTM A48, latest revision Class 30 or better. Manhole cover shall be a locking cover with frame, similar to Pattern No. 1000010 as manufactured by Campbell Foundry, Harrison, NJ or approved equal. See Hardware: paragraph.

Sand: surrounding cleanout shall be cushion sand as described in the NYCDOT Standard Highway Specifications.

Drain pipe: Shall be cast iron.

Cleanout ferrule: Shall be similar to model # CO-380 cast iron cleanout with gasketed brass countersunk plug, no hub connection as manufactured by Watts Drainage products, Spindale, NC or approved equal.

Expansion joint with sealant: material shall be one of the following: A premolded bituminous fiber joint filler, as specified in Section "B" (requires a bond breaker and sealant) or, a premolded closed cell expanded polyethylene foam joint filler, such as MasterSeal 920 by BASF Inc., Shakopee, MN (requires only sealant) or, an approved equal of any of the above. If bituminous fiber material is used, a bond breaker such as one-half inch (1/2") width polyethylene tape or five-eighths inch (5/8") diameter expanded polyethylene foam backer rod shall be installed as recommended by manufacturer. A bond breaker will not be required for a premolded foam joint or a shredded recycled rubber aggregate joint filler, but sealant is always required. Prepared expansion joints shall be coated with a primer followed by installation of a bond breaker and a self-leveling two-component polyurethane-based elastomeric sealant. The Contractor shall apply Sikaflex 429 primer with Sikaflex - 2C SL sealant, manufactured by Sika Corp., Lyndhurst, N.J; or BASF

MasterSeal P 173 with MasterSeal SL 2 sealant, by BASF, Inc., Shakopee, MN, or approved equal. Color of sealant shall be concrete gray. Asphalt cement will not be approved as a sealant.

Precast Concrete plumbing pit: (for Bottle Filler w/Hi-lo Drinking Fountain Basins) The Concrete Plumbing Pit shall be precast, manufactured by Key Cast Stone Company, Inc., Amityville, NY, Pro Concrete Precast, Jamaica, NY, or approved equal.

Cement: Air entrained Portland cement shall comply with the requirements of the ASTM Designation C150. It shall be Type IIA, moderate sulfate resistant.

Cast stone shall have a compressive strength of not less than forty-five hundred (4,500) pounds per square inch when tested as 2" x 2" x 2" cubes at an age of not more than twenty-eight (28) days and shall have an absorption rate not to exceed seven (7%) percent of the dry weight after being dried to constant weight at 150 degrees Fahrenheit. No chipped, broken, or checked stone showing fine hair cracks or checks on the surface will be accepted.

Aggregate: Natural Sand and gravel shall conform to the requirements of ASTM C33. Calcium Chloride: Do not use calcium chloride in precast concrete.

Reinforcing Bars: ASTM A 615, Grade 40 or Grade 60 as necessary. Bars are to be used to handle transportation and handling stresses.

Welded Wire Fabric: Shall meet ASTM A1064/1064M.

Supports for Reinforcement: Provide supports for reinforcement including bolster, chairs, spacers, and other devices for spacing, supporting, and fastening reinforcing.

Miscellaneous Iron and Steel: Access into the concrete plumbing pit shall be via a two (2') foot diameter ductile cast iron frame and "Parks Leaf" manhole cover as shown on contract plans. Manhole Covers shall be of gray iron per ASTM A48, latest revision, Class 30 or better. Covers shall be as manufactured by Campbell Foundry Co., Harrison NJ or EJ USA, Inc., East Jordan, MI or approved equal. All covers shall be suitable for highway traffic, meeting the requirements for heavy duty H-20 loading, per AASHTO M306-10.

Hardware: Each cover shall be furnished with two (2) Stainless Steel Penta-Head bolts as supplied by Campbell Foundry Co., Harrison, NJ, or approved equal. Typical plastic end caps are to be supplied with hardware and installed on Penta-Head bolts.

Bottle Filler: Shall be Model #10125-SM-NYC as manufactured by Most Dependable Fountains, Inc. Arlington, TN, Model #M-OBFX-NYC as manufactured by Murdock Manufacturing, City of Industry, CA, Model #LK4400BF-NYC as manufactured by Elkay, Oak Brook, IL, or approved equal.

Bottle Filler w/dog bowl: Shall be Model #10125-SM-DB-LHB-NYC as manufactured by Most Dependable Fountains, Inc. Arlington, TN, Model #M-OBFX-PF-NYC-HB6 as manufactured by Murdock Manufacturing, City of Industry, CA, Model #LK4400-DB-BF-LHB-NYC as manufactured by Elkay, Oak Brook, IL, or approved equal.

Bottle Filler w/ Hi-Lo Drinking Fountain basins: a "Hi-Lo" drinking fountain is defined by ADA as a unit where one fountain basin is accessible to those who use wheelchairs and one fountain basin is at a standard height convenient for those who have difficulty bending.

Bottle Filler w/ Hi-Lo Drinking Fountain basins: Shall be Model #10145-SM-NYC as manufactured by Most Dependable Fountains, Inc. Arlington, TN, Model #GYQ5X-NYC as manufactured by Murdock Manufacturing, City of Industry, CA, Model #LK4430-BF-1U-NYC as manufactured by Elkay, Oak Brook, IL, or approved equal.

Customization of bottle fillers for NYC use:

Manufacturer's identification-shall be displayed discreetly on the unit's access panel to facilitate ordering replacement parts.

All parts and installation shall meet applicable requirements of N.Y.C. Codes, including type "K" copper tubing throughout for water supply within unit.

Sensor operated bottle filler and freeze resistant valves are Not required under this specification.

Tubular Body: Shall be either pipe or tubular steel or fabricated 304 stainless steel, 12 gauge or better.

Access covers: shall be located for easy access to facilitate maintenance and replacement of parts and shall be fastened with vandal resistant stainless steel screws.

Surface mount: Shall be either stainless steel mount or optional stainless steel surface carrier.

Corrosion Resistant Treatment: All fabrication and welding shall be completed prior to application of the corrosion resistant coating, metal pieces shall be cleaned of all weld spatter, mill scale, varnish, rust, grease, and the like and the surface mechanically and chemically prepared to receive the coating. This corrosion resistant coating shall be a thermal spray zinc coating or electrostatic or immersion applied primer with a minimum thickness of 3 mils. All metal pieces, including welds, shall receive the coating inside and out.

Polyester Powder Coating: A surface coat shall be applied to the thermal zinc coated metal pieces in such a manner that the coating will not peel off. The manufacturer shall perform all processes required to achieve a smooth material bond. An epoxy or acrylic polymer primer shall be applied prior to application of powdercoating. The surface coat shall be an electrostatically sprayed, lead-free, superdurable TGIC (triglycidyl isocynanurate) polyester powder coating applied to a minimum of three (3) mils thickness which shall be oven cured. The TGIC polyester powder coating shall be UV resistant and comply with the ASTM standards.

Material manufacturer's directions for storage and use shall be adhered to. Material surfaces shall be protected during shipment so as to arrive mar and scratch free in the field.

Color- shall be Blue, Green, Black or Silver/Gray, as shown on the drawings and/or as selected by the Engineer. Where Silver/Gray color is specified, satin finish stainless steel (without powder coating) may be substituted.

NYC Water Logo: shall be a vinyl decal with ultraviolet (UV) cured ink, designed for outdoor use, minimum thickness 5 mil. Decal shall include a UV protected laminate. Adhesive shall be guaranteed to perform at temperatures as low as -10 degrees F. Minimum durability shall be 3 years. Dimension of decal shall be 3 7/8" in width, 7 3/8" in height, light blue color shall be Pantone Process Cyan (4 color print CMYK 100,0,0,0), white color shall be Pantone Process White (4 color print CMYK 0,0,0,0) or approved equal. Logo shall be placed in recess as shown on attached sketch or as approved by the Engineer.

Hardware: All hardware, fittings, and fastenings shall be tamper resistant 18-8 stainless steel, type 304 in accordance with ASTM F593 of sizes as indicated on the shop drawings and as required to complete the installation. Anchor bolts shall be minimum 3/8 inch, ten (10") inches long and may be either stainless steel or galvanized steel, quantity as required by the manufacturer.

Bubbler Head: Bubblers shall be rounded one piece design, vandal-resistant type, certified to be lead-free. Bubblers may be either 18-8 stainless steel type 304 or chrome plated cast brass.

Push Button: Shall be stainless steel valve body with a 1 ½" diameter feather touch vandal resistant push button. Push button for bottle filler and accessible "lo" basin shall be activated by a maximum five (5) pounds of pressure, in compliance with ADA.

Stainless Steel Bowls: Shall be 18 gauge or better stainless steel, type 304, satin finish to comply with ASTM A380 and ASTM A967 standards, install with tamper proof stainless steel screws.

Dog Bowl: construction and finish to match the bottle filler and stainless steel bowl as specified herein.

Lockable Hose Bibb: shall be included in dog bowl/pet fountain models. Locking device shall be constructed to be vandal resistant. The Engineer shall supply the lock. A vacuum breaker shall be included.

Waste Strainer: Shall be satin chrome plated brass or stainless steel waste strainer with a 1-1/4"

O.D. tailpiece. Plastic waste drain/strainers are not acceptable.

Plumbing: The manufacturer shall have all factory installed plumbing components pre-tested installed before delivery to site. All factory connections to be made by a licensed plumber.

PLUMBING: The Contractor shall furnish and install all pipe, fittings, valves, and other foundries to complete the plumbing for the connections and concrete pit. The drain pipe shall be extended five (5) feet beyond the foundation and connected to the sanitary drain line or dry well, as shown on the plans. The one and one-quarter (1 1/4") inch cold water line shall be extended five (5') feet beyond the foundation and connected to the water supply pipe, as shown on the plans.

Connection to water supply shall be made with a threaded, extra heavy fitting. The Contractor shall provide dielectric fitting at appropriate locations, as shown on plan.

Water Piping: Water Piping shall be one and one-quarter (1 1/4") inch rigid hard temper type "K" copper tubing as shown on the plans meeting the specification for ASTM B88. Fittings shall be approved wrought copper and bronze solder-joint pressure fitting (A.N.S.I. B16.22).

Pipes through precast concrete plumbing pit wall shall be protected with a sleeve caulked watertight with a silicone sealant. All appurtenances such as 1 1/4" Gate Valve, 3/4" drain cock, reducer coupling and 3/8" pressure regulator valve shall be installed as per plans, and as directed by the Engineer.

Pipe Supports: Pipe clamps shall be made up of 1" x 3/8" strap iron galvanized and shall be constructed to rigidly hold the pipes firmly in place. Clamps shall be held in place with anchor bolts set in fountain shaft or base.

INSTALLATION: Water supply and drainage lines shall be installed as shown on the detail and the plans. Prior to placement of concrete pad or precast concrete plumbing pit, the subgrade and broken stone shall be level and compacted. Concrete pad shall be a smooth, flat, broom finished surface installed flush with adjacent pavement grade and in accordance with the plans and details. Adjacent pavement shall be pitched away from bottle filler.

Bottle Filler: The unit is to be handled at lifting locations designated by the manufacturer; no chipped, cracked, or otherwise defective Bottle Filler will be acceptable.

The fixture shall be surface mounted and installed in accordance with the manufacturer's written directions. Entire assemblies shall be installed in accurate locations, square and plumb in concrete foundation and in required locations to surrounding finished grade, as shown on the plans. Anchor bolts shall be accurately set, plumb and true, in concrete foundation, quantity as recommended by the manufacturer.

Field connection: All field connections to be made by a Licensed Plumber. The factory installed portion of the cold water supply and waste water lines shall be extended from the Bottle Filler/Drinking Fountain Base at lengths indicated on the drawings. Water and Drain lines shall be pitched away from the Bottle Filler/Drinking Fountain. Pockets in rigid piping that cannot be

drained by gravity will be rejected. The plumber will be required to reinstall piping until gravity drain is achieved.

Winterization: The unit shall be winterized by shutting off water supply and opening bleeder valve (outside of fountain). The bottle filler, dog bowl and drinking fountain basins shall be designed to allow internal water to drain by gravity.

SUBMITTALS: All submittals shall be in accordance with the requirements of the S-Pages.

Shop Drawings: The Contractor shall submit a catalogue cut and a complete dimensional Shop Drawing of the bottle filler showing all components including color, internal plumbing, access panels, gauges of metal and thickness of wall construction at least twelve (12) weeks prior to proposed installation. NYC Water logo decal shall be displayed on shop drawing.

Operation and Maintenance Manual: The Contractor shall furnish an Operation and Maintenance (O & M) Manual prepared in conjunction with the manufacturers of equipment in this specification. The O & M manual shall contain the following:
Description of system operation.
Troubleshooting and Repair Guide.
List of parts with their model numbers.

MEASUREMENT AND PAYMENT: For each **BOTTLE FILLER** furnished and installed in accordance with the plans, specifications, and directions of the Engineer, the Contractor shall receive the unit price bid.

The price bid shall be a unit price for **EACH BOTTLE FILLER** and shall include the cost of all labor, materials, equipment, and incidentals necessary or required to complete the work including excavation, broken stone base, sand, polyethylene vapor retarder, geotextile, concrete, stainless steel anchor bolts, cleanout pipe, ferrule, manhole frame and cover, vandal resistant bolts, expansion joint with sealant, logo decal, submittals, all components integral with the bottle filler, all plumbing work and connections to water and drain service within five (5') feet from the center of the tubular body, all in accordance with the plans and specifications, to the satisfaction of the Engineer.

For each **BOTTLE FILLER W/DOG BOWL** furnished and installed in accordance with the plans, specifications, and directions of the Engineer, the Contractor shall receive the unit price bid.

The price bid shall be a unit price for **EACH BOTTLE FILLER W/DOG BOWL** and shall include the cost of all labor, materials, equipment, and incidentals necessary or required to complete the work including excavation, broken stone, sand, polyethylene vapor retarder, geotextile, concrete, stainless steel anchor bolts, cleanout pipe, ferrule, manhole frame and cover, vandal resistant bolts, expansion joint with sealant, logo decal, submittals, all components integral with the bottle filler including dog bowl and lockable hose bib, all plumbing work and connections to water and drain service within five (5') feet from the center of the tubular body, all in accordance with the plans and specifications, to the satisfaction of the Engineer.

For each **BOTTLE FILLER W/ HI-LO DRINKING FOUNTAIN BASINS** furnished and installed in accordance with the plans, specifications, and directions of the Engineer, the Contractor shall receive the unit price bid.

The price bid shall be a unit price for **EACH BOTTLE FILLER W/ HI-LO DRINKING FOUNTAIN BASINS** and shall include the cost of all labor, materials, equipment, and incidentals necessary or required to complete the work including excavation, broken stone, precast concrete plumbing pit, miscellaneous iron and steel, Parks Leaf manhole cover, vandal resistant bolts, hardware, logo decal, submittals, all components integral with the bottle filler, all plumbing work and connections to water and drain service within five (5') feet from the outside edges of the foundation, all in

accordance with the plans and specifications, to the satisfaction of the Engineer.

Item No.	Item	Pay Unit
PK-ESCR-635	Bottle Filler	EA
PK-ESCR-636	Bottle Filler W/ Dog Bowl	EA
PK-ESCR-637	Bottle Filler w/ Hi-Lo Drinking Fountain Basins	EA

NYC WATER LOGO

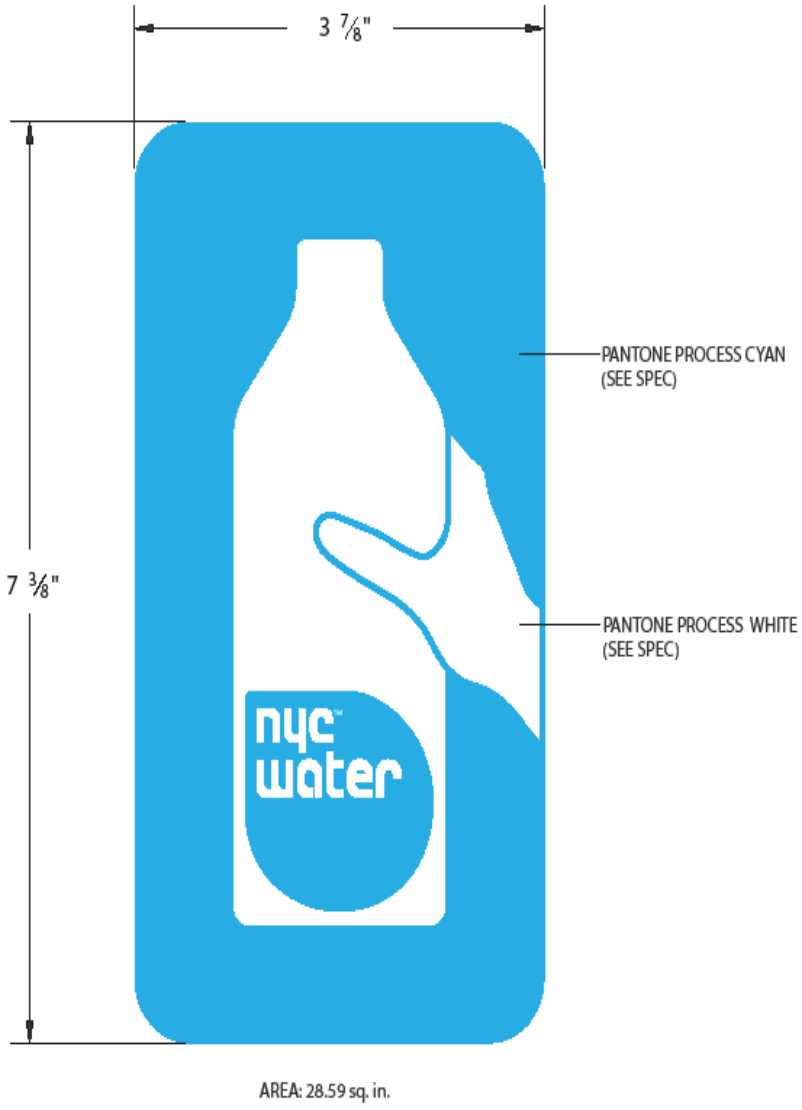

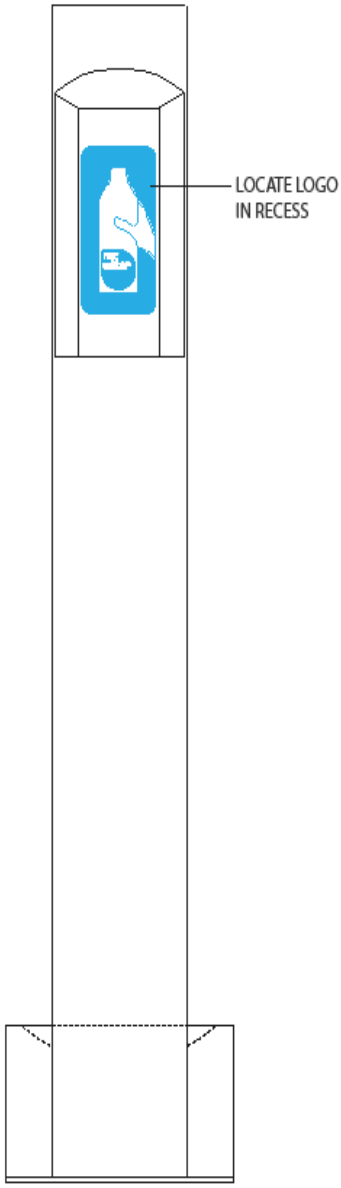

END OF SECTION

SECTION PK-ESCR 640 – GROUND HYDRANT – 1” DIA.

WORK: Under these Items, the Contractor shall furnish all labor, materials and equipment necessary or required to install **GROUND HYDRANT - 1” DIA.** including all plumbing work, connection to water service and irrigation in accordance with the plans, specifications, and directions of Engineer.

SCOPE: The Contractor shall furnish and install a ground hydrant, all piping, fittings, and other sundries necessary to connect the water lines and provide irrigation, as shown on the plans, to the satisfaction of the Engineer.

MATERIALS:

Hydrant: One Inch (1”) Diameter Ground Hydrant shall be Type Z-1360-BC-HD-RK-NB as manufactured by Zurn Industries Inc., Hydromechanics Division, Erie, PA, or approved equal. Hose connection shall be one inch (1”).

Hydrant is encased, ground hydrant for flush-with-grade installation, complete with bronze casing, polished nickel bronze box, all bronze interior parts, bronze seat and replaceable seat washer, non- turning operating rod with free-floating compression closure valve with 1" connection. Polished nickel-bronze box shall have a scoriated heavy-duty cover with operating key lock and "Water" cast on cover. Depth of bury is two (2) feet minimum for both size Ground Hydrants. Four (4) keys are to be supplied to the Engineer.

Broken Stone: Broken Stone shall consist solely of crushed ledge rock. Stone shall be as designated on the detail and shall be of the approved size and quality specified in the NYCDOT Standard Highway Specifications.

Coupling Valve & Key: Quick coupling valve shall be solid red brass, bayonet type, with a one (1") inch inlet size, Buckner Model QB44LRC10, or approved equal. Corresponding coupling key shall be three quarter (3/4") inch inside diameter with a one (1") inch male thread, Buckner Model QB44K10, as manufactured by Buckner Brass, Storm Manufacturing Group, Inc., Torrance, CA, or approved equal. One valve and two keys required per site.

Hose Swivel Ell: Hose Swivel Ell shall be bronze with one (1") inch female thread for coupler and three quarter (3/4") inch male garden thread for hose*. Hose Swivel Ell must be manufactured by the same company as the Quick Coupling Valve & Key*, and shall be Buckner Model HS-100 or approved equal. One required per site.

Brass Garden Hose Adaptor: Shall be a one (1”) inch FPT, with a three-quarter (¾”) inch garden hose thread, Model # FM1076 as manufactured by George Taylor Brass and Bronze Works, Huntington, N.Y., or approved equal. One required per site.

Siamese “Y” Connectors**:** Siamese “Y” connectors shall be brass, with shut-off valves at each connection. Size shall be three quarter (3/4”) inch by three quarter (3/4”) inch. Two required per site.

Nozzle: Nozzle shall be a solid brass nozzle to fit a three-quarter (3/4") inch hose, Midsize #529 as manufactured by Gilmour, Chicago, IL or approved equal. One required per site.

Brass Rose: Rose shall be Brass, four (4”) inches in Diameter with protective rubber guard and metric to inch hose thread converter, Model #540B, as manufactured by Dramm Corporation, Manitowoc, Wisconsin, or approved equal. One required per site.

Extension Handle: Extension handle shall be extruded aluminum tubing, thirty (30”) inches long, with forged brass hose couplings and comfort hand grip, Model #130-G, as manufactured by Dramm Corporation, Manitowoc, Wisconsin, or approved equal. One required per site.

Shut-Off Valve: Shut-off valve shall be brass with Teflon® seals and a hard chrome plated ball, Model #300, as manufactured by Dramm Corporation, Manitowoc, Wisconsin, or approved equal. One required per site.

Sprinkler Head With Base**:** Sprinkler head shall be brass and stainless steel impulse type mounted on a Rezimar wheeled base, six and one half inches (6 ½”) wide by nine inches (9”) high, one and one half (1 ½) pounds minimum weight for stability, with ergonomic grip and swivel coupling and a powder coated finish, to fit three-quarter (3/4") inch hose. Sprinkler head and base shall be “Pulsating Sprinkler” Model # 50260 as manufactured by Nelson, Peoria, IL or approved equal. Two required per site.

Hose: Hose shall be garden hose, three-quarter (3/4") inch diameter in four (4) fifty (50') foot lengths, with a burst pressure of 500 psi minimum, equipped with approved connectors. Hose shall be “Flexogen” as manufactured by Gilmour, Chicago, IL or approved equal. 200 feet of hose required per site.

Hose Reel**:** Hose Reel shall be constructed of one (1”) inch diameter steel frame, with heavy-duty ten (10”) inch wheels. Cart and reel shall have a baked enamel finish and be capable of holding two hundred (200’) feet of 3/4” hose. Hose reel shall be as manufactured by A. M. Leonard or approved equal. One required per site.

Soaker Hose: Shall be porous pipe constructed primarily of recycled rubber tires. Hose shall weep along its entire length. Hose shall be five eighth (5/8") inch diameter in fifty (50') foot coupled lengths. All fittings shall be nickel plated brass. Hose shall be No. 17010 ColorStorm Premium 50 Foot Soaker Garden Hose as manufactured by Dramm, or approved equal. 100 linear feet of hose required per site.

Anchor Pins for Soaker Hose: Shall be five (5”) inch x one (1”) U-shaped 11-gauge steel pins. Each package shall contain ten (10) pins. Two packages required per site.

Tests: Before any irrigation materials are accepted, they shall meet such tests as may be required to prove to the satisfaction of the Engineer that they are in proper working order and will do the work for which they are intended, in a satisfactory manner.

SUBMITTALS: Provide Product Data including Manufacturer’s catalog sheets and specifications for each valve type. List type of valves, manufacturer’s model number, and size for each service application.

Operating Keys: The Contractor shall furnish four (4)-operating keys for each hydrant installed under this item.

Parts Repair Kit: Contractor shall supply one (1) Parts Repair Kit for each Ground Hydrant installed under this item.

MEASUREMENT & PAYMENT: For **EACH** Ground Hydrant – 1” Dia. furnished and installed, complete with all plumbing work in accordance with the plans, specifications, and directions of the Engineer, and delivery of all irrigation materials, the Contractor shall receive the unit price bid.

The price bid shall be a unit price for **EACH** Ground Hydrant – 1” Dia. and shall include the cost of all labor, materials, equipment and incidental expenses necessary to complete the work, including all plumbing work and connections to water service within five (5') feet of the ground hydrant, broken stone. The following items are required per site: one (1) Quick Coupling Valve and two (2) Keys, one (1) Hose Swivel Ell, one (1) Brass Garden Hose Adaptor, two (2) Sprinkler Heads with Base, two hundred linear feet (200') of 3/4" Hose, one hundred linear feet (100’) of soaker hose, twenty (20) anchor pins, one (1) Hose Reel, two (2) Brass Siamese “Y” Connectors with Shut-off Valves, one (1) Brass Rose, one (1) Extension Handle, and all submittals in accordance with the plans and specifications to the satisfaction of the Engineer.

Plug Valve, Valve Box, Excavation and Concrete for Park Structures shall be paid for under their respective items.

Item No.	Item	Pay Unit
PK-ESCR-640	Ground Hydrant - 1” DIA.	EA

END OF SECTION

SECTION PK-ESCR 641 – IN-GROUND IRRIGATION SYSTEM-AUTOMATIC

WORK: Under this item, the Contractor shall prepare and submit an irrigation design of the type specified above, prepared by an approved Irrigation Design Specialist, furnish, and install the approved **IN-GROUND IRRIGATION SYSTEM** including all labor, materials and equipment, all in accordance with the plans, specifications, and directions of the Engineer. Work under this item includes, but is not necessarily limited to, the following:

1) Irrigation booster pump system.
2) Irrigation controller.
3) Proposed Irrigation Layout & Shop Drawing submittals.
4) Trenching, excavation, and backfill for the entire system.
5) Installing fully operational irrigation system.
6) Testing all systems and making operative.
7) Preparing "As-built" drawings.
8) First Year Winterization & following Spring Activation.
9) Exterior solenoid valves and rain sensor
10) M&O Orientation and Demonstration
11) Operation Maintenance Manual & Instructional Video.

Irrigation Design Specialist: The Contractor shall obtain the services of an Irrigation Design Specialist to prepare an irrigation design proposal for the landscaped areas designated on the plans. The Irrigation Design Specialist shall have a minimum of three (3) year's experience performing commercial irrigation design work. The designer's experience shall be of a similar size and scope to the work shown on the drawings. Certification with a specialty in "Commercial Irrigation Design" (CID-Commercial) by the Irrigation Association, Fairfax, Va., shall be considered proof of the requisite experience, however, any equivalent combination of education and experience may be submitted for approval. Grounds for Rejection of submitted layout plan: In selection and installation of sprinkler heads, irrigation specialist shall select the appropriate sprinkler heads to keep the paved areas, sidewalks, roadways, sitting areas, playground, etc. relatively dry without compromising the full irrigation of turf and planting areas. As much as is practical, the valve boxes shall not be located in playing areas of athletic fields.

Existing trees shall be protected.

Conference: Before any work is started, a site conference shall be held between the Contractor, the Irrigation Design Specialist, the Irrigation installer, and Engineer concerning the work to be performed under this Item. The Tree Protection Plan shall be reviewed at this conference and siting, layout, hand and/or pneumatic excavation or tunneling shall be discussed. Contractor shall schedule conference at the convenience of the □□□□□□r.

Coordination: The Contractor shall install PVC pipe or galvanized heavy wall steel sleeves under roadways, sidewalks, and pathways to facilitate installation of the irrigation system. The Contractor shall coordinate and cooperate with other Contractors to enable the work to proceed as rapidly and efficiently as possible.

Permits: The Contractor shall obtain all necessary permits and pay all required fees, at no additional cost to the City, to any governmental agency having jurisdiction over the work. The Contractor as required shall arrange inspections required by local ordinances during the course of construction.

Licenses: A Licensed Plumber shall make all plumbing connections.

A Licensed Electrician (where system is automatic) shall perform all electrical work.

Rejection: the Engineer reserves the right to reject any proposed design layout, material, or work, which does not conform to the Contract Documents. Rejected work shall be removed or corrected at the Contractor's expense immediately upon notification by the Engineer.

MATERIALS:

For proper coordination of materials used in the Irrigation system, all materials shall be purchased from the same supply source, although not necessarily the material of a single manufacturer. Unless otherwise specified, all materials shall be as manufactured by Toro Irrigation Products, or approved equal. All materials throughout the system shall be new.

Irrigation Pump Stations:

The plumbing booster pump system will be used for the site irrigation.

Discharge Manifold for Irrigation:

The pump station discharge manifold assembly will include:

Valves

The manifold will be provided with the following valves:

a) Check Valves

Cast iron body, stainless steel disc duo flap check valves on each pump unit.

b) Isolation Valves

Cast iron body stainless steel disc insert type butterfly valves on:

- each pump unit
- the discharge line to the field

c) Air Valve

A 50 mm (2 inch) single acting air release valve complete with isolating gate valve located at the highest point in the discharge manifold.

d) Pressure Relief Valve

- A fast acting diaphragm type pressure relief valve with a fully adjustable brass pilot and control tubing with discharge pipework back to the wet well.
- The flow capacity of the pressure relief valve will be greater than the designed flow rate for the pump station.
- The pressure relief valve will be isolated from the manifold by a gate valve.

Sprinkler Heads For General Turf Areas: Sprinkler Heads For General Turf Areas shall be a

T7series rotor as manufactured by The Toro Irrigation Products, Rain Bird, Hunteror approved equal.

The full and/or part circle sprinklers shall be gear driven rotary type. Part circle models shall be adjustable from 45 to 335degrees. The sprinkler shall be capable of covering a 5040' radius at 50 pounds per square inch pressure with a discharge rate of 11.6 gallons per minute. Water distribution shall be via one modular nozzle mounted and locked onto a 1 3/8" diameter nozzle turret. Radius reduction shall be reducible by up to 25% by means of a radius adjustment screw accessible from the top of the nozzle when the sprinkler is properly installed.

The body and cap of the sprinkler shall be injection molded from ABS, a non-corrosive, UV-resistant, heavy-duty plastic material. The sprinkler shall have a plastic filter screen sized to prevent entry of foreign material to the nozzle. All components shall be removable from the top of the sprinkler case.

The sprinkler shall have a single-piece riser/body seal that regulates flushing during pop-up and retraction to clear any debris from around the riser, and a heavy-duty stainless steel spring to ensure positive retraction. The seal shall be a single piece injection molded from Santoprene, a synthetic rubber.

The sprinkler shall be capable of accepting any one of 13 nozzles. The nozzles shall be color-coded and available in three trajectories (standard angle - 25 degrees; low angle - 15 degrees; flat angle - 7 degrees).

Rotation shall be accomplished by a sealed, oil packed gear drive assembly isolated from the water supply and driven by a variable stator that maintains a constant speed of rotation with all nozzles. The variable stator shall require no adjustments when changing nozzles. The sprinkler shall employ a modular, interchangeable nozzle technology. Any individual nozzle shall be easily removed, installed and locked if field adjustment is required.

A standard pop-up, non-commercial model shall be available with a check valve, which shall maintain 10' of elevation change. A lavender effluent water use indicator is available and can be press fit into the nozzle. A 1/4" NPT plug shall be provided with all side inlet models to plug the unused inlet.

<u>Sprinkler Heads for Field Irrigation:</u>

T7 Sprinkler Head Specifications

Toro Super T7 Series, or approved equal.

Radius 39' to 75'

Flow Rate 1.7 to 30.6 GPM

Operating Pressure Range: 40 -100 PSI

Recommended Operating Pressure Range: 40 - 75 PSI

- thirteen Nozzle Variations:

  * 2.0, 3.0, 4.5, 6.0, 7.0, 7.5, 9.0, 12.0, 16.0, 20.0, 24.0, 27.0 GPM, each available in:

    > Standard Angle (25 Degree Trajectory)

    > Low Angle (15 Degree Trajectory)

    > Flat Angle (7 Degree Trajectory)

- Single Rotating stream pattern

- Full Circle (360 degrees) model
- Adjustable part circle (45 to 335 degrees) model
- Lockable Arc Adjustment
- Check-O-Matic models available
- Balanced precipitation rates
- Up to 25% reducible watering radius
- Precipitation rate: .06 - 1.29 inches per hour
- Stainless Steel Riser Sleeve
- Locking Cap
- Exposed Surface 2"
- Cap Diameter 3"
- Inlet size: 3/4" NPT Female Thread
- Trajectory (maximum height of spray at 40 PSI)

Nozzle	Std Angle	Low Angle	Flat Angle
2.0	7' 6"	4' 5"	3' 0"
3.0	7' 6"	4' 10"	2' 6"
4.5	8' 0"	5' 4"	2' 1"
6.0	8' 6"	5' 2"	2' 0"
7.5	9' 0"	5' 7"	1' 11"
9.0	10' 0"	5' 5"	2' 1"
7.0	10' 6"	5' 6"	2' 7"
9.0	11' 0"	5' 5"	2' 3"
12.0	11' 6"	5' 6"	2' 4"
16.0	12' 0"	5' 7"	2' 7"
20.0	12' 6"	5' 8"	2' 5"
24.0	13' 0"	5' 9"	2' 9"
27.0	13' 6"	6' 0"	3' 0"

- Commercial > Height: 7"
  > Body Diameter: 2 3/8"
  > Pop Up to the Nozzle: 3"
  > Weight: 4.5 oz.

<u>Sprinkler Head for Lawn Irrigation:</u>

The sprinkler shall be of the fixed-spray type designed for in-ground installation. The sprinkler shall be capable of accepting all 300 series spray, stream, flood, and microspray nozzles and

male-threaded risers and extenders. The sprinkler shall operate within a 20-75 PSI (1.4-5.2 Bar) pressure range.

Stream Rotors must feature multiple rotating streams, a slower precipitation rate and must successfully fight wind. They should utilizes Matched Precipitation Rate (MPR) nozzles to ensure precise, proportional flow for uniform water coverage. The rotors should have Interchangeable arc plates and nozzles to provide versatility with the ability to cover varying arc requirements from 90 to 360 degrees and rated for Durable plastic and stainless steel body styles—pop, shrub and high-pop.

Radius: 14’-33’

- Flow Rate:

– Lawn Pop-up and High pop: 0.57-7.51 gpm

− Shrub: 2.07-6.36 gpm

- Operating Pressure Range: 35-50 psi
- Pop-up Height to Nozzle:

– Lawn Pop-up: 23/4”

– High Pop: 113/4”

- Inlet (Female-threaded):

– Lawn Pop-up and High pop: 3/4”

– Shrub: Combined 1/2” to 3/4”

- Large basket filter screen
- Body Diameter: 23/8”
- Cap Diameter: 3”
- Height:

– Lawn Pop-up: 61/8”

– High Pop: 16”

- Shrub Base Diameter: 13/4”

Nozzle	27° - Max. Ht. of Spray
01	4' 10"
02	5' 1"
03	5' 11"
63	7' 0"
93	6' 3"

The sprinkler shall be a model number as indicated on the control drawings and shall be manufactured by The Toro Irrigation Products, USA, or approved equal.

Sprinkler Heads for Planted Areas:

Rotary Sprinkler Heads shall be 570Z Series rotor as manufactured by Toro Irrigation Products, or approved equal.

The sprinkler shall be of the fixed spray type designed for in-ground installation. The sprinkler shall be capable of accepting all 570Z series spray, stream, flood, and micro spray nozzles and male-threaded risers and extenders. The sprinkler shall operate within a 20 to 75 PSI pressure range.

The body and cap of the sprinkler shall be injection molded ABS, a non-corrosive, impact-resistant, UV-resistant, heavy duty plastic material. The sprinkler shall have a color-coded riser screen filter, stainless steel or plastic, appropriately sized to prevent entry of foreign material to the nozzle. All parts shall be removable through the top of the sprinkler case.

The sprinkler shall have a single-piece riser/body seal that flushes only upon retraction to clear any debris from around the riser, and a stainless steel spring to ensure positive retraction. The sprinkler shall have no flush during pop-up to allow the maximum number of sprinklers per station. The seal shall be a single piece injection molded from Alcryn, a synthetic rubber.

The sprinkler shall be capable of nozzle alignment via a two-piece ratcheting riser. The sprinkler shall be available in models with a check valve or standard models shall be capable of accepting a check valve that will prevent low head drainage with elevation differences up to 7'. A ½" NPT plug shall be provided with all side inlet models to plug the unused inlet.

A biodegradable debris label shall be factory-installed to eliminate debris intrusion during installation and line flushing.

A lavender effluent water use indicator shall be available and capable of snap fitting to all sprinkler caps.

Sprinkler Heads Rotary – 570Z Series: The sprinkler shall be of pop-up design with an overall body height of 6 ¼", a body diameter of 1 3/8", a cap diameter of 2", and having a pop-up stroke of 4 ¼".

- Toro 570Z Series, or approved equal.
- Radius: 0'- 22'
- Flow Rate: 6.5 GPH to 4.58 GPM
- Operating Pressure Range: 20-75 PSI
- Recommended Operating Pressure Range: 25 to 50 PSI
- Optimum Operating Pressure: 30 PSI
- PCD Nozzles: 30 to 75 PSI
- Accepts all Toro spray, stream, flood, and micro spray nozzles
- Zero flush seal & cap configuration
- Exposed surface: 2" cap diameter
- Body diameter: 1 3/8" (2", 3", 4", 6" models); 1 5/8" (12" model)
- Inlet size – ½" NPT female thread

MODEL:	HEIGHT:	POP-UP:	WEIGHT:

570Z-2P	4”	2”	1 oz.
570Z-3P	4 7/8”	3 ¼”	1 oz.
570Z-4P	6 ¼”	4 ¼”	1.3 oz.
570Z-6P SI	8 ¼”	6 ¼”	1.7 oz.
570Z-12P SI	15 ½”	12”	3.9 oz.

(Side Inlet = 4 ¾” from top of sprinkler to center of side inlet)

Root Watering System:

The RWS consists of a perforated polyethylene cylinder in three different lengths – 36” (91,4 cm) for large trees, 18” (45,7 cm) for small trees, and 10” (25,4 cm) for shrubs and row plantings – and two different widths – 4” (10.2 cm) for trees and 2” (5,1 cm) for shrubs and row plantings. Provide cylinder supports pea gravel fill to provide better top-to-bottom water dispersion and firmness against root compression.

The RWS shall designed with an integrated bubbler and optional check valve. All factory-assembled RWS should be pre- configured with swing assemblies and/or spiral barbed fittings in order to promote irrigation design flexibility, accommodate all tree and shrub sizes.

The RWS should support an extra-wide molded collar to provide convenient access to the bubbler and drip line fastener and support a locking grate cover to help deter vandalism. The RWS shall contain a sock option in order to prevent small particles from penetrating the RWS cylinder. The RWS shall designed with a peripheral watering feature which allows water to flow along the perforated cylinder resulting in the wetting of soil along the vertical distance of the cylinder.

RWS units should be installed on their own watering zone in order to improve irrigation efficiency and management.

The Root Watering system shall be model as indicated on the contract drawings and shall be manufactured by Rain Bird, Toro, Hunter corporation or approved equal.

Plastic Piping: All main line pipe shall be Class 200; S.D.R.-13.5 or PVC schedule 80, Type 1120-1220 polyvinyl chloride (PVC) pipe and shall conform to CS-256-63. Pipe shall be rated for 200 psi pressure and pipe size shall not be less than three-quarter (¾ “) inch diameter. Lateral pipe may be either Class 200 PVC or equivalent NSF rated polyethylene (Poly) pipe.

Fittings: Plastic fittings shall be Schedule80, polyvinyl chloride (PVC) standard weight as manufactured by Spears, Dura, or approved equal. Only solvent weld or insert fittings are acceptable; no saddle type clamping of fittings will be used.

Solvent Cement: Shall be Compatible with PVC pipe and of proper consistency.

Isolation Valves: Three inch and smaller isolation and drain valves shall be screwed bonnet, bronze body, solid-wedge type gate valves with threaded ends, non-rising stems, and shall be rated for a normal operating pressure (cold water) of at least 200 PSI. They shall be comparable to code 27, as manufactured by Kitz, or approved equal.

Valve Boxes: Access to all main line isolation valves shall be provided by standard rectangular boxes. The valve boxes shall be Models as indicated on the contract drawings and as manufactured by “Christy Concrete”, reinforced high density concrete box with steel checker plate cover, or approved equal. Valve boxes shall be set to manufacturer’s

specifications at finished grade. Valve boxes shall be marked in the field with indelible black marker (V-1, V-2, etc.) and shall also be marked on the laminated layout plan to be posted at the site (See “Submittals”). Valve boxes to be green color for lawn areas and tan color for mulch areas in planting beds.

Swing Joints: Triple swing joints for T5RS Rotary sprinklers shall be ¾” triple swing joint kits with double O-ring seals at threaded connections model number E007-4 as manufactured by Dura or equal. Swing joints for Toro 640 Series or Toro T7 Series rotary sprinklers shall be 1" triple swing joint kits with double O-ring seals at threaded connections model number 5807-010 as manufactured by Spears or approved equal. Swing joint for 570PRX-Com series shall be ½”. Swing joints for Quick Couple Valves shall be 1" triple swing joint kits with double O-ring seals at threaded connections and brass insert model 5815-010 as manufactured by Spears or approved equal.

Rain Sensor & Enclosure (where system is automatic)**:** Rain sensor shall be Toro TWRFS or approved equal.

Remote Control Valve (where system is automatic): shall be 252Series as manufactured by The Toro Irrigation Products, Rain Bird, Hunter, or approved equal. The Remote-Control valve shall be of a globe/angle configuration with a female pipe thread inlet and outlet. The diaphragm shall be of rubber construction to retain flexibility and provide maximum sealing throughout its area. Valve shall have a manual flow control with the following characteristics:

- Toro 252 Series, or approved equal
- Operating Pressure - 10 to 220 PSI
- Globe/angle configuration
- Rubber diaphragm
- Active Cleansing Technology
- Flow control and internal and external bleed
- Self-cleaning metering pin (electric)
- Pressure regulation models (electric)
- Stainless steel diaphragm seat

Electric and Pressure Regulating Remote Control Valve (where system is automatic): The valve shall be as manufactured by The Toro Irrigation Products, or approved equal. The valve shall be held normally closed by internal water pressure. A 14-gauge solenoid lead wire shall be attached to a 24 VAC, 50/60 Hz solenoid with waterproof molded coil capable of being removed. Valve shall have a self-cleaning metering pin to protect bleed ports and to purge contaminants.

Exterior Control Wires (where system is automatic): Control wires from controller to valves shall be 24-volt solid wires U.L. approved for installation in conduit. Minimum wire size: 14 gauge; 12 gauge for common wire.

PVC Conduit for Control Wiring (where system is automatic**):** All underground exterior 24 volts control wiring for solenoid (electrical) valves shall be installed in PVC rigid (non-metallic) conduit with fittings, approved equal to UL listed Carlon Plus 40 Rigid PVC non-metallic conduit. The conduit shall be manufactured to NEMA TC-2 Federal Specifications and UL 651 Specifications and carry respective UL listing and UL labels. The cement for PVC rigid conduit shall be approved equal to all weather quick set cement (5^0 – 100^0F) Series VC9981 through VC9984. The conduit wherever possible shall be installed in the same trench with water line.

In Line Control Wiring Boxes (where system is automatic): Also, in-line underground pull boxes as required for splicing, termination and remote connections for solenoid valves shall be furnished and installed.

Sleeves for Control Wires (For Automatic System): Sleeves shall be installed under all walks and paving and where indicated on drawings. Sleeves shall be PVC schedule 40 or galvanized heavy wall steel pipe conduit, as shown on the drawings. Sleeves for Control Wires: Sleeves shall be installed under all walks and paving and where indicated on drawings. Sleeves shall be PVC schedule 40 or galvanized heavy wall steel pipe conduit, as shown on the drawings.

Irrigation Controller: The irrigation controller should be wall mounted in the key-locking cabinet, in-door installation, capable to control up to 200 stations and should be Model CDEC-SA-200 or CDEC-SA-100 (depending on the number of station) as manufactured by Toro, Rain Bird, Hunter or approved equal.

Spare Parts: The contractor shall provide spare sprinklers and root watering systems as follows. Sprinklers for Field Irrigation: 50 Sprinklers of each type.

Sprinklers for Lawn Irrigation: 50 Sprinklers of each type.

Sprinklers for Planting Irrigation: 50 Sprinklers of each type.

Root Watering System: 20 Systems.

INSTALLATION: The Irrigation Contractor shall lay out work to the drawings as accurately as possible. The drawings may be generally diagrammatic to the extent that swing joints, offsets and all fittings may not be shown. The Contractor shall be responsible for full and complete coverage of all irrigated areas and shall make any necessary adjustments at no additional cost to the City. If not specified on the plans, the Contractor shall be responsible for proper sprinkler head placement and adjustment.

Existing Plant Material and Site Conditions: The Contractor shall take necessary precautions to protect existing plant material and site conditions. If damage is incurred, the Contractor shall repair the damage at the Contractor's own expense to the original condition to the satisfaction of the Engineer.

Protection of Site: The Contractor must become acquainted with all site conditions. If utilities not shown on the plans are found during excavations, the Contractor shall promptly notify the Engineer for instructions as to further action. Failure to do so will make Contractor liable for any and all damage thereto arising from the Contractor's operations subsequent to discovery of such utilities not shown in plans.

Contractor shall make necessary adjustments in the layout as may be required to connect to existing stubouts. Should such stubs not be located exactly as shown, Contractor may be required to work around existing work at no increase in cost to the City.

All piping installation work shall be started after completion of soil preparation; and shall be completed prior to planting, sod placement, and/or seeding.

Excavating And Trenching: Restore all surfaces, existing underground installations, etc., damaged or cut as a result of the excavations to their original condition and in a manner approved by the Engineerat no additional cost to the City.

Trenches shall be made wide enough to allow a minimum of 2 inches between parallel pipe lines. Trenches for pipelines shall be made of sufficient depths to provide minimum cover from finish grade as follows:

1) 18" minimum cover over main lines.

2) 18" minimum cover over control wires from controller to valves.

3) 16" minimum cover over lateral lines to sprinkler heads.

Pipe Installation: Plastic pipe and fittings shall be solvent welded using solvents and methods as recommended by manufacturer of the pipe, except where screwed connections are required. Pipe and fittings shall be thoroughly cleaned of dirt, dust and moisture before applying solvent with a non-synthetic bristle brush.

Pipe may be assembled and welded on the surface. Snake pipe from side to side of trench bottom to allow for expansion and contraction.

Make all connections between plastic pipe and metal valves or steel pipe with threaded fittings using plastic male adapters and teflon tape.

Remote Control Valve Installation (For Automatic System): Remote Control Valves shall be installed as shown on the drawings and grouped together where practical. Remote Control Valves shall be installed a minimum of 6” away from sidewalk edges, buildings and walls. As much as is practical, the valve boxes shall not be located in playing areas of athletic fields.

Mounting Rain Sensor (For Automatic System): Mount the rain sensor on a wall or roof surface close to the timer/controller inside, in order to minimize the wire length between the two, and the chance of wire breakage. The sensor and enclosure must be mounted where they will receive rainfall, but not in the path of sprinkler spray, as well as high enough to be secure from vandalism. The sensor should not be mounted on the north side of a building, or where constant shade may prevent the sensor from drying soon enough to permit activation of the sprinkler system when required.

After mounting the sensor securely, run the control wiring to the sensor in ¾” dia. PVC conduit, securing with steel straps a maximum of every five feet (5'). If an extension to the twenty-five feet (25') of wire provided is needed, the following table will determine the minimum wire gauge required:

Extension:	25 - 50'	50 - 100'	100' +
Wire Gauges	20 AWG	18 AWG	16 AWG

Automatic Controllers (For Automatic System) Remote control valves shall be connected to controller in a logical sequence to correspond with manufacturer’s instructions.

Automatic Control Wiring (For Automatic System) Control wires mains and laterals shall be installed in conduit in common trenches wherever possible.

Install control wires at least 12 inches below finish grade and lay to the side and below main line. Provide looped slack at valves and snake wires in trench to allow for contraction of wires. Tie wires in bundles at ten-foot intervals.

Control wire splices will be allowed only in runs more than 500 feet. Any splices must be installed in an existing valve box or separate valve box installed flush with finished grade. All boxes and covers shall be watertight.

All wire passing under existing or future paving, construction, etc., shall be encased in galvanized steel conduit extending at least 12 inches beyond edges of paving or construction.

A total of two spare control wires shall be installed from the irrigation controller to the farthest valve on the main line. The spares shall be looped through each valve box between the irrigation controller and the farthest valve.

IMPORTANT: Closing Pipe And Flushing Lines: Cap or plug all openings as lines have been installed to prevent the entrance of materials that would obstruct the pipe. Leave in place until removal is necessary for completion of installation. Thoroughly flush out all water lines before installing heads, valves and other hydrants. Valve boxes shall located away from playing areas as much as possible.

TESTING, BACKFILLING & OPERATIONS ORIENTATION & DEMONSTRATION:

Hydrostatic Testing: Before backfilling, the entire system shall be hydrostatically tested and inspected. The Contractor shall notify the Engineer in writing at least 48 hours in advance of testing. Testing to be accomplished at the expense of the Contractor and in the presence of the Engineer. Center load piping with small amount of backfill to prevent arching or slipping under pressure. Apply a minimum continuous and static water pressure of 100 PSI when welded plastic joints have cured at least 24 hours and with the risers capped as follows:

1). Main lines and sub mains to be tested for 1 hour.

2). Lateral lines to be tested for 1 hour. (If laterals and individual sub-mains downstream of control valves have less than 90 PSI working pressure or less than 10 GPM flow, hydrostatic tests are waived for these laterals).

Leaks exposed during tests shall be repaired and the system re-tested to the satisfaction of the Engineer. On completion of the work, satisfactory evidence shall be furnished by the Contractor to show that all work has been installed in accordance with the ordinances and code requirements.

Backfill and Compacting: After system is operating and required tests and inspections have been made, backfill excavations and trenches with clean soil, free of aggregates larger than 3/8 inch. Backfill for all trenches, regardless of the type of pipe covered, shall be compacted to minimum 90% density. Compact trenches in areas to be planted by thoroughly flooding the backfill. Dress off all areas to finish grades.

Clean Up: Remove from the site all debris resulting from work of this section. Job site must be left clean and repaired to the satisfaction of the Engineer.

Winterization and Spring Activation: The Contractor shall perform complete blow out of the irrigation system with compressed air in the late fall, no sooner than October 15, and no later than November 15, unless otherwise directed by the Engineer. The Contractor shall also activate the system the following spring. The Engineer shall be present for both these operations.

M&O Orientation and Demonstration: After testing is completed and approved by the Engineer, an orientation and demonstration session shall be held for the NYCDPR M&O staff. The installed irrigation system shall be demonstrated for one day (maximum 6 hours) for the district M&O Staff. The demonstrations shall include manual and automatic operation including pumping. The demonstration shall also include identification and operation of each component, trouble shooting for each component, winterizing the system, removal and replacement of defective components, general and specific requirements for system maintenance, and a check list for frequent attention of components. Highlights of the demonstration, including identification of components shall be videotaped for future M&O orientation.

O&M Manual & videotape: The Contractor shall furnish six (6) copies of the O&M Manual (Operation & Maintenance Manual) for the irrigation system and the associated mechanical system. The manual shall include a checklist for trouble shooting and corrective measures in addition to operation and maintenance instructions. The Contractor shall also furnish to the

Engineer an instructional video as described above on operation and maintenance of the irrigation system.

SUBMITTALS: All submittals shall be as specified in the S-Pages.

Irrigation Design Specialist Qualifications: The Contractor shall submit for approval, the name and qualifications of the proposed Irrigation Design Specialist including CID certification. As an alternate to certification, experience and a minimum of three (3) professional references, and sample drawings for three commercial (3) designs of one (1) acre or larger, may be submitted. Submittal must be a minimum of 4 weeks prior to the proposed irrigation system installation date. The Irrigation Design Specialist shall be meet the qualifications listed on the first page of this item under the heading Irrigation Design Specialist:

Irrigation Layout and Shop Drawings: The Contractor shall submit the Design Proposal and Shop Drawings in accordance with the requirements of the S-Pages prior to manufacture. The system shall be designed to cover turf grass areas and planting beds as shown on the planting plan. A shop drawing is required, showing layout of the complete irrigation system, including the main line pipe, controller locations, remote control valves, quick-coupling valves, all sprinkler heads locations and spray pattern. All drawings must be prepared, signed and sealed by the approved Irrigation Design Specialist. Also, see Grounds for Rejection, Irrigation Design Specialist heading.

Catalog Cuts: The Contractor shall submit Catalog cuts of the sprinkler heads, valves, and all connected piping for approval prior to installation.

As-Built Drawings: The Contractor shall prepare "As-Built" drawings in accordance with Section C, Article 9. Submission of As-Built drawings for this item shall not be waived and shall be submitted as soon after installation as possible. Drawings shall show the irrigation system as installed, including the main line pipe, electrical controller locations, remote control valves, quick-coupling valves, all sprinkler heads, drip areas, etc. Deviations from the shop drawings made during construction shall be noted. The drawings shall also indicate and show approved substitutions of size, material and manufacturer's name and catalog name and catalog number.

Warranty: The Contractor shall submit the manufacturers' standard warranties for sprinkler heads and valves.

O & M Manual & videotape: The Contractor shall furnish six (6) copies of the Operation & Maintenance Manual and one (1) instructional videotape (all labeled with name of site and contract number) to be distributed by the Engineer as follows:

- One (1) laminated manual to be hooked to wall at the site (see below)
- One (1) O&M manual and one (1) instructional videotape to DPR Training Academy (contact- Michael Crescenzo 718-760-6588).
- Two (2) manuals to Borough Supervisor of Mechanics(S.O.M.) Three (3) manuals to Construction division (file, map file)

Laminated Reference Materials: The following submittals shall be prepared in a reasonable size/scale, laminated and mounted or hooked on the wall in the building at the site, as directed by the Engineer.

A. Schematic color-coded layout (by zone) of the irrigation system along with step- by-step, clear operating instructions. Valve boxes shall be labeled on the plan and correspondingly marked in the field with indelible black marker.

B. A detailed suggested watering schedule for the site. If automatic system, include

start times, days and run time.

C. One copy of a laminated O & M Manual hooked to wall as described above.

D. Name and phone number of supplier(s) for all replacement parts.

E. Detailed guide for trouble-shooting common system operation problems.

F. Detailed Winterization / Spring Activation instructions.

MEASUREMENT AND PAYMENT: The quantity of In-Ground Irrigation System (manual or automatic) to be paid for under this item shall be the number of **SQUARE YARDS** of landscaped areas actually irrigated, measured from the planting plan, in accordance with the plans, specifications, and directions of the Engineer.

The price bid shall be a unit price per **SQUARE YARD** of landscaped area irrigated and shall include all labor, materials, equipment, and incidental expenses necessary to install the complete irrigation system from the supply distribution valve, including trenching, excavation, backfill, control wiring, (where automatic is specified), testing, M&O orientation, all submittals, laminated reference materials, all in accordance with the plans and specifications, to the satisfaction of the Engineer.

Backflow Preventer (RPZ), Water Meter, Booster Pump, and Utility Structure, Hand and/or Pneumatic Excavation, Tunneling, where applicable, shall be paid for separately under their respective Contract Items.

The Engineer will retain ten (10%) of the irrigation item payment until the Contractor completes the requirements of the Testing, M&O Orientation and Demonstration, and O&M Manual & Videotape sections of this specification, to the satisfaction of the Engineer.

Item No.	Item	Pay Unit
PK-ESCR-641	In-Ground Irrigation System-Automatic	SY

END OF SECTION

SECTION PK-ESCR 642 –GAS SERVICE MAIN – 2” DIAMETER

SECTION PK-ESCR 643 - GAS SERVICE MAIN – 3” DIAMETER

PK-ESCR 643.1 INTENT: Under this item the Contractor shall furnish and install a new **GAS SERVICE MAIN – 3” & 2” DIAMETER**, for building of the size indicated on the plans, in accordance with the plans, specifications and directions of the Engineer.

PK-ESCR 643.2 DESCRIPTION: Gas service for the building shall start where the Utility Company terminated its service and extend to the inside of the building wall, including the required utility Company Service sleeve. Gas service shall be set in a bed of sand.

PK-ESCR 643.3 MATERIALS:

PIRCH OR PIPE: The new gas service main shall be pitched to low points or to street main at least one inch (1”) in thirty feet (30). Low points shall be provided with approved type gas drips when located outside of the building.

GAS PIPE AND FITTINGS: Pipe for the gas service shall be standard weight I.P.S. black steel pipe and shall be mill wrapped and asphaltum coated.

Fittings for pipe shall be Dresser type and shall be entirely covered with asphaltum, forming a sealed joint with the mill wrapped pipe.

SLEEVES: Sleeves shall be installed in all walls and shall be galvanized steel pipe.

PK-ESCR 643.4 QUALITY CONTROL:

TEST: The Contractor shall before pipe joints are covered and trenches back-filled, test the entire installation with pressure equal to 100 p.s.i.g. Test pressure shall show no loss for period of 30minutes. All defects shall be required and rest repeated until pipe is proven tight under conditions outlined.

The contractor shall notify the Engineer, Utility Company, and all other agencies that have jurisdiction before tests are made. No test will be considered valid unless witnessed by the representative of the various agencies having jurisdiction and their approval received in writing.

PK-ESCR 643.5 MEASUREMENT AND PAYMENT: The quantity of **GAS SERVICE MAIN – 3” & 2” diameter** to be paid for under this item shall be the number of **LINEAR FEET** (laying length) of black steel pipe furnished and incorporated in the work, in accordance with the plans, specifications, and directions of the Engineer.

The price bid shall be a unit price per **LINEAR FOOT** of laying length of black steel pipe, sleeves and fittings and shall include the cost of furnishing, delivering, handling, laying, coating, testing, and all labor, materials, and incidental expenses necessary to complete the work in accordance with the plans and specifications, to the satisfaction of the Engineer. The Contractor shall obtain and pay for all permits necessary or required and the cost shall be included in the unit price bid for this item. Excavation and Sand are to be paid for separately.

Payment will be made under:

Item No.	Item	Pay Unit
PK-ESCR-642	GAS SERVICE MAIN – 3” DIA.	LF
PK-ESCR-643	GAS SERVICE MAIN – 2” DIA.	LF

END OF SECTION

SECTION PK-ESCR 644 – SERVICE WEIGHT CAST IRON SOIL PIPE – 4" DIA.

WORK: Under these Items, the Contractor shall furnish and install SERVICE WEIGHT CAST IRON SOIL PIPE (formerly known as Extra Heavy Cast Iron Soil Pipe) of the sizes called for and shown on the plans or as directed by the Engineer.

MATERIALS: Service Weight Cast Iron Soil Pipe shall consist of hub and spigot joint cast iron soil pipe and fittings, similar or equal to that manufactured by the Tyler Pipe Co., Tyler, Texas, or approved equal, and of the grade called for.

INSTALLATION: Service Weight Pipe shall be laid true to line and grade with hubs upstream and shall have a full, firm and even bearing. Joints are to be connected with SV Ty Seal Gasket, as manufactured by Tyler Pipe Co., Tyler, Texas, or approved equal.

CONNECTION: The Contractor shall do all the work necessary to join the Cast Iron Soil Pipe to the existing sewer as shown on the Plans. The cost for doing this shall be included in the unit price bid for this Item.

MEASUREMENT AND PAYMENT: The quantity of SERVICE WEIGHT CAST IRON SOIL PIPE to be paid for under this Item shall be the number of linear feet (laying length) of each size pipe, including fittings, clean-out structures, measured in its final position, furnished and placed in accordance with the plans, specifications, and directions of the Engineer.

The price bid shall be a unit price per LINEAR FOOT of laying length Service Weight Cast Iron Soil Pipe of each size shown and shall include the cost of all labor, materials and equipment necessary pipe to complete the Work in accordance with the plans and specifications, to the satisfaction of the Engineer.

Excavation shall be paid for separately under its own Item.

Item No.	Item	Pay Unit
PK-ESCR 644	SERVICE WEIGHT CAST IRON SOIL PIPE – 4" DIA.	LF

END OF SECTION

SECTION PK-ESCR 646 – MISCELLANEOUS IRON AND STEEL

PK-ESCR 646.1. **WORK:** Under this item, the Contractor shall furnish and place all cast iron, cast steel, wrought iron and steel, not especially included under other items, as shown on the plans and for miscellaneous castings, etc.

PK-ESCR 646.2. **MATERIALS:** All materials shall meet the requirements as given in NYCDOT Standard Highway Specifications or as directed by the Engineer.

PK-ESCR 646.3. **CLEANING:** Except otherwise ordered by the Engineer, immediately prior to the final inspection the Contractor shall clean unimbedded surfaces that show evidence of loose mill scale, non-adherent rust, peeling paint and other deleterious matter in accordance with SSPC SP2, Hand Tool Cleaning, a method generally confined to wirebrushing, sandpaper, hand scrapers or hand impact tools.

PK-ESCR 646.4. **MEASUREMENT AND PAYMENT:**

The quantity of **MISCELLANEOUS IRON AND STEEL** to be paid for under this item shall be the number of **POUNDS** furnished and placed in accordance with the plans, specifications, and directions of the Engineer.

The price bid shall be a unit price per **POUND** and shall include the cost of all labor, materials, equipment and incidental expenses necessary to complete the work in accordance with the plans and specifications, to the satisfaction of the Engineer.

Item No.	Item	Pay Unit
PK-ESCR 646	MISCELLANEOUS IRON AND STEEL	LBS.

END OF SECTION

SECTION PK-ESCR 650 – TEMPORARY POWER FOR FIRE BOAT HOUSE

GENERAL: Under this item the contractor shall furnish and install Temporary Power to Fire Boat House during construction as specified on drawings in compliance with National Electrical Code and NYC Electric Code.

The item shall include the labor, material, equipment installation with all required accessories such as electrical conductors, switches, portable generator, fuel etc. All the work shall be done in compliance with all required code.

GENERAL SPECIFICATIONS:

1. All Electrical Components, Devices, and Accessories: Listed and labeled as defined in NFPA 70, by a qualified testing agency, and marked for intended location and use.
2. All construction must conform to all local codes designed by NY City.
3. Comply with NFPA 70.
4. Comply with NECA 1 and NECA 413.
5. All Electrical work shall be performed by a Licensed Electrician, as specified by NYC Building Department in a neat manner and in accordance with best practices. All work shall comply with the National Electrical Code (NEC), all New York City amendments to that code, state and Federal rules and regulations.
6. An onsite evaluation is required to determine conduit, wiring etc. requirements before any work.
7. Notify the Engineer before any work is done. All work must be done under the direction of a licensed electrician.

WORK INCLUDED:

1. The Contractor shall make all necessary arrangements to provide temporary power to Fire Boat House to power building heater and lighting 24 hour per day & seven days a week from September 1st to match 31st.
2. Contractor to provide electrical capacity equal to 50KW, 208/120 Volts, 3 Phase, 4 Wire portable generator or temporary electric service with appropriate switches, cable, connectors etc. according to NEC standards.
3. The temporary power system shall be determined, designed and maintained by the contractor. Contractor to submit temporary power plan for review and approval.
4. The temporary power cables may be routed above grade with heavy duty cable protector to protect the cables from damage and maintain a safe work site.
5. Wiring for temporary 3-phase power shall, in general, consist of 4 wire, 120/208 volt connected to the existing Fireboat house service and panelboard.
6. Upon completion of the project, remove all temporary power work and restore all affected finishes and connections.

MEASUREMENT & PAYMENT: Temporary Power shall be paid on monthly basis and installed in accordance with the plans, specifications and directions of the Engineer.

The price bid shall be monthly base, furnished and installed and shall include the cost of all labor, materials, equipment and incidental expenses necessary to complete the work, including testing, generator, fuel, personnel, temporary Con-Ed service, Con-Ed invoices, etc. all in accordance with the plans and specifications to the satisfaction of the Engineer.

Item No.	Item	Pay Unit
PK-ESCR-650	TEMPORARY POWER FOR FIRE BOAT HOUSE	Each Month

END OF SECTION

SECTION PK-ESCR 651 – ELECTRIC VEHICLE SINGLE CHARGING STATION

SECTION PK-ESCR 652 – ELECTRIC VEHICLE DUAL CHARGING STATION

GENERAL: Under this item the contractor shall furnish and install new Electric Vehicle Charging Station specified on drawings in compliance with National Electrical Code and NYC Electric Code.

The item shall include the labor material and equipment for installation of EV Charing Station with all required accessories such as EV Cables, Controllers, Equipment, EV Connector, EV Inlet, anchor bolts and mounting hardware, etc. All the work shall be done in compliance with NYC Electrical code requirements. All associated material for complete installation of EV Charging Station shall be included under this item.

SPECIFICATIONS FOR EV CHARGING STATION:

1. All Electrical Components, Devices, and Accessories: Listed and labeled as defined in NFPA 70, by a qualified testing agency, and marked for intended location and use.
2. All construction must conform to all local codes designed by the City of New York.
3. Comply with NFPA 70 and NYC electrical code.
4. Comply with NECA 1 and NECA 413.
5. An onsite evaluation is required to determine conduit and wiring requirements from panel to proposed “Charging Station” parking spaces.
6. EV Charging station should be manufactured by Chargepoint Model Number CT4000 Family.
7. EV chargers must be sized at 125% of the load on each leg of three phase panel in accordance with National Electrical Code (NEC) requirements. 40A breakers are required with maximum load of 32A accordance with NEC code for continuous load devices.
8. EV Charging Equipment Mounting should be Concrete Pedistal Mounted.
9. All mounting work should follow the mounting specification and instructions from Chargepoint.
10. All mounting components must have galvanized washers, Heavy Galvanized Hex Nuts (DH Rated), Hot dipped galvanized threaded bolts, etc.
11. Field verify EV Charging station mounting location.
12. Enclosure Should be rated for environmental condition at installed location.
    a. Outdoor Locations: NEMA 250, Type 3R, UL 50E
    b. Aluminum and UV-resistant plastic.
    c. Paint and Anodized.
    d. Charging components protected by security screws.
    e. Charging connectors in locking holsters.
    f. Meter, modem, and CPU tamper resistant.

13. EV Cable and Connectors:
    a. SAE J1772 connector.
    b. Connectors with locking holster.
    c. 18-foot cable with cable management system.
14. Status Indicator LED to indicate power, vehicle charging, charging complete, system status, faults, and service, as well as authorization.
15. Display Screen should be VGA-resolution, daylight-viewable LCD screen with UV protection. Daylight readable and fingerprint resistant.
16. Single vehicle: AC Level 2 at up to 7.2 kW (CT4000) per vehicle.
17. Dual vehicles, AC Level 2 at up to 7.2 kW (CT4000) per vehicle.
18. Install EV charging equipment on 24-inch nominal-diameter and 35-inchreinforced concrete base.
    a. Place and secure anchorage devices. Use setting drawings, templates, diagrams, instructions, and directions furnished with items to be embedded.
    b. Install anchor bolts to elevations required for proper attachment to supported equipment.
    c. Secure EV charging equipment to concrete base according to manufacturer's written instructions.
19. Protect mechanical finishes on exposed surfaces from damage by applying a strippable, temporary protective covering before shipping.
20. Technical Support: Beginning at Substantial Completion, service agreement shall include software support for the duration of an active ChargePoint Network Service Plan.
21. Appearance of Finished Work: Noticeable variations in same piece are not acceptable. Variations in appearance of adjoining components are acceptable if they are within the range of approved Samples and are assembled or installed to minimize contrast.
22. Ensure wiring, circuit protection and metering is in place at the station installation by reviewing PE Engineer approved drawings, wiring diagram, grounding requirements and specifications.
23. If possible, avoid making any wire splices.
24. Evaluate and measure 3G Version or AT&T cellular signal levels and identify suitable locations for the placement if any necessary cellular signal booster equipment.
25. Allow for thermal movements from ambient and surface temperature changes.
26. Examine areas and conditions, with Installer present, for compliance with requirements for installation tolerances and other conditions affecting performance of the Work.
27. Examine roughing-in for EV charging equipment electrical conduit to verify actual locations of conduit connections before equipment installation.
28. Examine areas and pavement for suitable conditions where EV charging equipment will be installed.
29. Proceed with installation only after unsatisfactory conditions have been corrected.
30. The voltage of either line, relative to ground, must not fall below 80 volt.

31. Neutral is not used to power the station but must be properly connected to ground, at panel or transformer, to provide the necessary voltage reference relative to ground.
32. Wiring Method: Conceal conductors and cables in rigid conduit.
33. Wiring within Enclosures: Bundle, lace, and train conductors to terminal points with no excess and without exceeding manufacturer's limitations on bending radii. Install lacing bars and distribution spools.
34. Comply with EV charger manufacturer requirements for installation of Low-Voltage Conductors, Cables, Conduits, Grounding & Bonding etc.
35. Connect wiring according to the manufacturer's wiring specifications.
36. EV equipment and pedestal to be effectively bonded and grounded.
37. Provide bronze ground bushing on all conduit ends and bond to EV pedestal and ground terminal.
38. Tighten electrical connectors and terminals according to manufacturer's published torque-tightening values. If manufacturer's torque values are not indicated, use those specified in UL 486A-486B.
39. Provide engraved stainless steel cable tags indicating the panel fed from and circuit number within the EV pedestal.
40. Complete installation and startup check according to manufacturer's written instructions
41. Upgrade Service: At Substantial Completion, remotely update software to latest version. Install and program software upgrades that become available while an active ChargePoint Network Service Plan is maintained. Upgrading software shall include operating system and new or revised licenses for using software.
42. Utilize ChargePoint Station Management Services and ChargePoint Assure Services, or Train Owner's maintenance personnel to adjust, operate, and maintain EV charging equipment.
43. Contractor Should coordinate the work and delivery of EV Charging equipment between manufacturer and supply all parties involved with the relevant information required to construct.

TESTING AFTER INSTALLATION: The cable shall be tested after installation but before final connections for the continuity and insulating. The insulation resistance must comply with the NETA recommended testing requirements.

1. Manufacturer's Field Service: Engage a factory-authorized service representative to test and inspect components, assemblies, and equipment installations, including connections.
2. Engage a factory-authorized service representative to perform startup service. All startup must be performed in the presence of the factory-authorized service representative.
3. Perform tests and inspections with the assistance of a factory-authorized service representative.
4. For each unit of EV charging equipment, perform the following tests and inspections:
    a. Unit self-test.
    b. Operation test with load bank.

c. Operation test with EV.

d. Network communications test.

5. EV charging equipment will be considered defective if it does not pass tests and inspections.
6. Prepare test and inspection reports, submit to the Engineer.

MEASUREMENT & PAYMENT: Electric Vehicle Charging Station shall be payed and installed in accordance with the plans, specifications and directions of the Engineer.

The price bid will be a unit price for each Electric Vehicle Charging Station, furnished and installed and shall include the cost of all labor, materials, equipment and incidental expenses necessary to complete the work, including testing, all in accordance with the plans and specifications to the satisfaction of the Engineer.

Item No.	Item	Pay Unit
PK-ESCR-651	ELECTRIC VEHICLE SINGLE CHARGING STATION	EA
PK-ESCR-652	ELECTRIC VEHICLE DUAL CHARGING STATION	EA

END OF SECTION

SECTION PK-ESCR 653 – PHOTOVOLTAIC SYSTEM – SOUTHERN M&O CANOPY

SECTION PK-ESCR 654 – PHOTOVOLTAIC SYSTEM – NORTHERN M&O CANOPY

PK-ESCR 653.1 INTENT: Under this item the Contractor shall furnish and install a complete Electric Photovoltaic System and canopy lighting system with all incidentals required and as shown on the drawings as specified herein. All work shall be performed in a neat and workmanlike manner.

All materials to be furnished and all work to be performed shall be in strict compliance with the requirements of the latest specifications and standard practice of the New York City Electric Code. The Contractor shall submit shop drawings of all equipment to be furnished and drawings must be approved by the Engineer before beginning the manufacture of the equipment.

PK-ESCR 653.2 DESCRIPTION: The work shall include, but shall not be limited to the following: Furnish and install and connect all items of labor and material for a complete electrical system as indicated on the drawings and specified herein. Small and sundry items not necessarily indicated or specified, but required for the complete installation, shall be included in the Contractor's lump sum cost and incorporated in the Work.

1. Photovoltaic (PV) Panels.
2. Inverter & PV Cables.
3. Conduit and Wire
4. Pull Boxes, Junction Boxes
5. System and Equipment Grounding
6. PV Production MeterPanelboard with circuit breakers
7. Rails and support assemblies
8. Junction boxes
9. Monitoring systems
10. LED Light Fixtures and Drivers
11. Misc. supports and equipment.

ACCESS FOR EQUIPMENT: All work must be installed so that adequate access is provided for operation, maintenance and repair.

CODES, PERMITS AND CERTIFICATES: All items of labor and material shall be in accordance with the requirements of the latest edition of the New York City Electric Code, and the rules, regulations, standards, etc. of all other local or national agencies having jurisdiction. No materials shall be used that are not listed by the Underwriters' Laboratories and the N.Y. Board of Fire Underwriters. In addition, all applicable regulations and requirements of Con-Edison shall apply to work under the Contract.

The Contractor shall pay all fees, give all notices, file all necessary drawings, obtain all permits and certificates of approval as may be required in connection with the Work under this Contract.

1. All materials and workmanship shall comply in all respects with the rules and regulations of the Electrical Code of the City of New York.

2. The materials and workmanship shall comply in every respect with the contract specifications and drawing and fulfill the full intent thereof.

PK-ESCR 653.3 SUBMITTALS:

Provide following appropriate applications and submittals which includes but not limited to the Engineer.

1. Shop Drawings:

a. Submit sufficient information to demonstrate compliance with drawings and specifications.

b. Include electrical ratings, dimensions, mounting details, materials, required clearances, terminations, weight, wiring and connection diagrams, accessories, and nameplate data.

2. Product Manufacturer's catalog sheets:

   a. Inverter & Cables.
   b. Photovoltaic (PV) Panels and Micro Inverter.
   c. Rail and support assemblies.
   d. Ground wire, ground rods, exothermic welds and compression connectors
   e. Panelboard with circuit breakers
   f. Junction boxes.
   g. Monitoring systems and PV production meter
   h. LED Light Fixture & Drivers

3. For PV connection on the load side of electric meter and connection to the grid, prepare appropriate applications and submittals to the Engineer and the electric utility. Provide written documentation confirming the utility's approval of the interconnection of the solar energy electrical power generation system with the utility system.

4. Certification from the manufacturer that the system has been seismically tested to NYC Building Code requirements.

5. Submit a complete maintenance and operating manual that includes at the minimum technical data sheets, wiring diagrams, and information for ordering replacement parts.

6 Certification by the Contractor that the solar energy electric generation system has been properly installed, adjusted, tested, commissioned, and warrantied. Contractor must make all necessary field measurements and investigations to ensure that the equipment and assemblies meet contract requirements.

7. Estimated Annual Power Output: Submit calculated annual power output for each of the proposed solar photovoltaic systems and provide all necessary calculations.

8. If equipment submitted differs in arrangement from that shown on the drawings, provide shop drawings that show the rearrangement of all associated systems. Approval will be given only if all features of the equipment and associated systems, including access, are equivalent to that shown in the contract documents and acceptable to the Engineer.

PK-ESCR 653.4 QUALITY ASSURANCE:

1. Solar Energy Electrical Power Generation System installer(s) must demonstrate that they have successfully installed at least four projects within the past five years that, in aggregate, equal or exceed the size of the proposed project. References shall be provided for each of the referenced qualified projects.

2. Supports and racking for solar photovoltaic system must be submitted for review and approval. The submittal must include environmental loading analyses (including wind, snow, hail, and seismic) and the rack and substrate's ability to withstand these environmental forces as per manufacturer speciation's and NYC Building Code requirements.

3. For paralleling arrangement, the system shall have anti-islanding capability such that it is incapable of exporting power to the utility distribution system in the absence of utility

power. Paralleling must be approved by serving electric utility. Provide written correspondence from the utility confirming its requirements.

4. Investigate any other local ordinances that may apply to installation of a solar energy electrical generating system in the proposed location.
5. Warranties: The solar energy electrical generating system shall be subject to the terms of FAR Clause 52.246-21, except that the warranty period shall be as noted for the items below:
   A. Solar photovoltaic modules and inverter: 25-year manufacturer's warranty against defects in materials and workmanship.
   B. Power output: 25-year manufacturer's Peak System AC power output warranty, with the first 10 years at 90% minimum rated power output and the balance of the 25 years at 80% minimum rated power output. 8% 25-year DC power decline.

TESTS AND GUARANTEE: The entire electrical system and equipment furnished and installed under the Contract shall test free of shorts and grounds. Insulation resistance tests shall be performed on all wiring and equipment with instruments as approved. Insulation resistance as measured shall conform to the requirements of the New York City Electrical Code. The Contractor shall provide all equipment and personnel necessary to perform such tests. Performed tests shall be made in the presence of the Engineer.

All items of labor and material provided under the contract shall be guaranteed free of defects for a period of one year from the date of completion. Any defects appearing in this period shall be immediately corrected by the Contractor upon notification by the Engineer without additional charge.

PK-ESCR 653.5 MATERIALS:

Provide materials to fabricate functioning photovoltaic system in accordance with ASTM, IEEE, NEMA, NFPA, and UL, as specified in this section, and as shown on the drawings.

Factory-prefabricated solar equipment packages which include photovoltaic modules, mounting racks , inverters, and controls and which meet the requirements of this section are acceptable.

ELECTRICAL SERVICE:

Electric Service shall be at three phase, four wire, 60 Hertz, 120/208 volt power source as indicated on the drawings.

SOLAR PHOTOVOLTAIC (PV) PANELS:

Submittals Product Data: Includes but not limited to Catalog sheets, specifications and installation instructions.

1. Shall be listed to UL1703 (Type 2 Fire Rating), IEC 61215, IEC 61730, IEC 62716.
2. Shall be RoHS, OHSAS 18001:2007, lead free, REACH SVHC-163, PV Cycle.
3. Shall be Potential-Induced Degradation free: 1000 V10.
4. Shall be rated for IP-65.
5. Hail Protection: Compliant with testing procedure per ASTM E-1038.
6. Lightning Protection: Shall ground according to manufacturer instructions per UL 1703.
7. Operating Temperature shall be 40° F to +185° F (–40° C to +85° C).

INVERTER:

Submittals Product Data: Includes but not limited to Catalog sheets, specifications and installation instructions.

1. Shall be listed to UL 1741-SA and ANSI C12.1.
2. Shall Integrated ARC fault protection and rapid shutdown as per NEC 2014 & 2017.
3. Shall comply with IEEE 519 and IEEE 1547.
4. Shall be listed per FCC Part 15 Class A.1.
5. Shall have stand-alone, utility-interactive, or combined capabilities.
6. Shall include maximum power point tracking (MPPT) features.
7. Shall include anti-islanding protection for paralleling arrangement.
8. Shall include integrated safety switch and RS485 Surge protection.

CONDUIT, HOT DIPPED GALVANIZED RIGID STEEL:

The ends of all conduits shall be carefully reamed before installation and after the application for the die. Where it becomes necessary to cut a length of conduit it shall be done with a hacksaw or a specially approved cutter. Care shall be taken to secure a square end on all conduit.

Provide No. 10 drag wire in all empty conduit raceways.

The entire conduit and wiring system shall be thoroughly grounded in an approved manner. Exposed connection of ground wires shall be suitable protected from mechanical injury with rigid conduit and approved clamps and fittings.

Running threads shall not be used. Where conduit with tapered threads cannot be coupled with standard conduit couplings, O.Z. Split Couplings, Erickson Couplings, Crouse Hinds Couplings, or approved equal shall be used. Underground, or where coupling is to be covered with concrete, a watertight union shall be used. All male threads of steel conduit shall be coated with red lead of graphite base pipe compound. Do not paint female threads.

All appurtenances, fittings, hangers, with RGS steel conduit shall be galvanized and asphaltum coated.

During installation, the conduit shall be plugged tightly with conduit caps at the close of each day's work or whenever work is discontinued for any length of time, to prevent the entrance of earth, water or other foreign matter. Paper or wood plugs are not acceptable.

After laying, all conduit runs shall be tested for clear bore and correct installation. Snaking the conduits shall be done in the presence of Engineer. Any conduit, which rejects the mandrel, shall be removed at once, the Contractor bearing all costs of replacing defective conduit and restoring the ground or structure around it.

The end of each conduit one inch and smaller shall be provided with a lock nut and bushing where it enters a sheet steel cabinet box, etc. For conduits 1-1/4 inches and larger, insulated grounding bushings shall be used. Care shall be taken to see that all conduits form a permanent and continuous ground return back to the service ground connection point. Ground bushings shall be bronze type "RBLG", O.Z.,Thomas & Betts, Crouse-Hinds or equal.

All conduit shall be manufacturer's best grade delivered to the site in full pipe lengths, each trademarked by the manufacturer. All conduit connectors shall have insulated throats.

All ground connections to water pipes shall be made with type KH ground clamp Penn-Union, O.Z., Thomas & Betts, or approved equal.

In general, conduits shall be installed exposed and shall run parallel or perpendicular to wall lines.

Exposed conduits shall be securely fastened in place with PVC coated galvanized pipe clamps, racks, or other approved means, in a manner acceptable to the Engineer. Wood hangers and

perforated sheet metal hanger straps will not be permitted. Spacing of conduit supports shall not exceed five (5) feet. All auxiliary items for fastening conduits shall be furnished and installed by the Contractor.

Conduit shall be of such sizes that required conductors may be pulled without strain or injury. Standard manufactured elbows shall be used for all conduits 1-1/4 inch or larger.

The routing of conduits, as shown on the plans, is diagrammatic. Before installing any work, it shall be the responsibility of the Contractor to examine the working layouts of all other trades to determine exact locations and clearances. Where equipment is installed by other trades requiring connection by the Contractor, the Contractor shall likewise determine exact conduit entry locations from shop drawings or actual piece of equipment. Modifications to conduit runs shown on the drawings as found necessary, shall be made without additional cost, all subject to the Engineer's approval.

Conduits crossing construction expansion Joints shall be installed with approved expansion fittings, 0Z Gedney type AX or EX, Cooper Industries, ABB or approved equal, and provided with approved flexible grounding bonds bypassing the fitting.

Where it becomes necessary to offset exposed conduit runs due to construction conditions, etc., such offsets shall be made using conduit "EL" fittings, or other means as approved by the Engineer.

Final connections to motors shall be made with Type 'UA' sealtite flexible conduit with external copper bonding strap.

All piping, conduits or other items to be imbedded in new concrete shall be inspected and approved by the Engineer prior to concrete placement.

WIRE AND CABLE: Unless otherwise specified, all wires and cables shall be single copper conductor type Cross-Linked polyethylene (XLPE) moisture and heat resistant thermoplastic insulated with Jacket USE-2; for use at 600 volts A.C. rated 75 degrees C. operating temperature suitable for wet and dry locations equal in every respect to the latest Insulated Power Cables Engineers' Association (IPCEA) Specifications(Latest Revision). The wire and cables shall have Underwriters' Laboratories, Inc. label and be surface printed throughout the entire length at two-foot intervals with permanent identifying markings indicating manufacturers' name, size, type, and voltage.

Wire shall be no more than ninety (90) days old when purchased. All wire and cables shall be furnished on reels or spools and in lengths required to minimize splicing.

All conductors No. 10 AWG and smaller shall be solid; No. 8 AWG and larger, stranded except for ground wire which shall be solid.

Wires and cables No. 2 AWG and smaller shall be of continuous solid colors in accordance with the New York City Electric Code.

All wires larger than No. 2 AWG shall be colortape coded at all terminations.

All wire and cables shall be 98 percent conductivity copper as manufactured by Rome Cable Company, Essex Wire & Cable, Okonite, Anaconda Wire and Cable Company, or other acceptable manufacturer.

CABLE TEST DATA: No cables shall be shipped from the manufacturer's plant until the final certified test data is received from cable manufacturer stating that such cables are approved by the Engineer and they conform with the New York City Electric Code requirements.

GROUNDING:

Submittals Product Data: Includes but not limited to Catalog sheets, specifications and installation instructions.

1. All applicable components of the solar energy electrical power generating system must be grounded per latest NEC requirements.
2. DC Ground-Fault Protector:
    a. Shall be listed per UL 1703.
    b. Shall comply with requirements of the NEC.

PHOTOVOLTAIC JUNCTION BOX:

Submittals Product Data: Includes but not limited to Catalog sheets, specifications and installation instructions.

1. Shall be listed to UL 1741.
2. Shall include internal overcurrent protection devices with dead front.
3. Shall be contained in stainless steel type 316 NEMA Type 4X enclosure.

SWITCH/DISCONNECTING MEANS:

1. Shall be Heavy Duty Nema 4X, UL-listed, in accordance with the NEC, as shown on the drawings, and as specified.
2. Shall use steel conduit listed per UL 6, UL 1242, UL 797 (as appropriate), except for tracking modules. .
3. Shall use expansion joints on long conduit runs.
4. Enclosures subject to weather shall be rated NEMA 4X Type 316 stainless steel or better.
5. Cable Assemblies and Junction Boxes.

JUNCTION AND PULL BOXES:

Submittals Product Data: Includes but not limited to Catalog sheets, specifications and installation instructions.

Threaded type Boxes: Malleable iron with cadmium of galvanized finish for use with steel conduit, as manufactured by Appleton Electric Co., Crouse-Hinds Co., or 0Z/Gedney Co., or approved equal.

1. Malleable iron boxes shall be provided with galvanized malleable iron covers with approved gaskets, held by Everdur or approved equal machine screws. All threaded entries that are not used shall be closed by threaded pipe plugs, red leaded.

Preparation: Before proceeding with the installation of junction boxes, check the locations with the Engineer and have same approved.

Specific Purpose Outlet Boxes: Use to mount equipment when available and suitable for job conditions. Unless otherwise specified, boxes shall be threaded type for exposed conduit system, PVC coated or NEMA 4X stainless steel Type 316

Supplementary Junction and Pull Boxes: In addition to junction and pull boxes indicated on the drawings and required by the NEC, provide supplementary junction and pull boxes as follows:

1. When required to facilitate installation of wiring.
2. At every third 90 degree turn in conjunction with raceway sizes over 1".
3. At intervals not exceeding 100' in conjunction with raceway sizes over 1".
4. The box sizes shall be in accordance with code requirements.

LED LIGHT FIXTURES AND DRIVERS:

Submittals Product Data: Includes but not limited to Catalog sheets, specifications and installation instructions.

1. All work Shall Comply with NFPA 70.
2. LED and all associated components must me UL listed and in compliance with NEC code.
3. LEDs and drivers shall be rated for IP66, protect against dust, water ingress & corrosion.
4. Shall be rated for Vandal Resistance.
5. LEDs shall be Long-life, high-efficacy, surface mount.
6. Driver & LED Life Rating not less than 100,000 hours.
7. LED driver and junction box shall be NEMA 4x.
8. Drives shall accept 120 – 277 volts or 480 volts, 60 Hz.
9. Contractor shall submit product data shall indicate that luminaire, LED arrays, and drivers fully comply with contract documents.
10. Contractor shall submit LED photometric data.
11. Warranty Period for LEDs, drivers and electrical components shall be Ten years from date is installed.
12. All metal parts shall be free of burrs and sharp corners and edges.
13. Housings shall be rigidly formed, weather- and light-tight enclosures that will not warp, sag, or deform in use.
14. All Exposed Hardware Material shall be Stainless steel.

SERVICE SWITCH: Service switch to be heavy duty, NEMA 4X stainless steel with removable ground-neutral link. Switch to be 208/120 volt, 3 phase, 4 wire, 600 volt rated. Service switch to be located within electrical service and distribution cabinet.

CUTTING AND PATCHING: The Contractor shall perform all cutting and patching of work that may be required. All patching shall be done by qualified personnel.

The Contractor shall coordinate with all trades so that all cutting and patching required for the work is performed in a timely manner.

Wherever possible, the Contractor shall provide sleeves for new concrete, to avoid cutting and patching. Install sleeves and equipment shown on electrical drawings in forms, before concrete is placed. Where utility sleeves are not installed before concrete is placed, complete all cutting and core drilling required to install all new conduit or other required new items as shown on the drawings. Holes cut for new conduit shall be done with core-boring tools. Holes for large items shall have edges neatly cut with a power saw.

The Contractor shall be responsible for the patching of all openings to provide a snug and waterproof seal. Any other damages to the structures shall be properly repaired at no additional cost.

The use of power driven impact tools will not be permitted to install openings.

INSTALLATION OF CONDUCTORS IN CONDUIT OR RACEWAY: No wire shall be pulled until the conduit and/or raceway system for a specified section or area is complete.

All feeders and mains shall be of the sizes shown on the Contract Drawings all in accordance with these specifications. All wires to be installed in any one conduit shall be pulled in at the same time and directly from reels. For pulling wires and cables, an approved lubricant may be used. All wires shall be continuous without splices between boxes, panelboards, cabinets, etc. Sufficient slack shall be left in all boxes for splicing wires and making proper connections.

All cable taps and splices in boxes shall be made secure with solderless compressive type connectors as manufactured by Burndy or approved equal. Connectors shall be installed with

approved hydraulic tools to assure a permanent mechanically secure high conductivity joint. Insulation tape shall be 3M No. 23 Plymouth, Ideal or approved equal. Jacket tape shall be applied over the insulation tape to a thickness of two times thickness of cable jacket. Jacket tape shall be water-resisting type 3M Scotch No. 88 Plymouth, Ideal or approved equal. All splices and tape shall be waterproof.

All wiring in troughs shall be neatly tied and racked. Wires shall be grouped as to the equipment they serve, and shall have brass tags attached thereto. Tags shall have engraved lettering indicating panel or equipment source, circuit number and equipment served.

All conduit shall be carefully cleaned before and after erection. All ends shall be free from burrs and inside surfaces shall be free from all imperfections likely to injure the wires and cables. Immediately before the wires and cables are pulled into any conduit run, such completed conduit run shall be snaked with a steel band to which shall be attached an approved tube cleaner equipped with an approved spherical mandrel of a diameter not less than 85 percent of the nominal inside diameter of the conduit. All conduit through which this mandrel does not pass shall be removed and replaced by the Contractor at their own expense.

REGULATORY REQUIREMENTS: Special caution note: The Contractor is fully aware that the work involved is an active roadway and in some cases requires additional safety precautions. The Contractor is responsible to protect workers in the performance of the work.

Codes:

1. General: Comply with the requirements of American National Standards Institute (ANSI), National Electrical Manufacturers Association (NEMA), Underwriters Laboratories (UL), New York City Department of Transportation, (NYCDOT), New York State (NYS), New York City (NYC), & Federal, etc. codes referred to in these specifications, except where requirements of these specifications are more restrictive or stringent. Such codes shall be the date of latest revision in effect at the time of performing the work, unless the date is given.
2. Building Code: Comply with the requirements of the New York State Uniform Fire Prevention and Building Code and New York City Building Code.
3. Electrical Codes:
    a. Work Area: Electrical Work shall conform to the requirements of the latest edition of the NYC Electrical Code (NYCEC) and National Electrical Code (NEC), and all state and local codes. The Engineer shall be the sole judge of the interpretation of these rules and requirements.
    b. Work and Off-Site Staging Area: Electrical Work shall conform to the requirements of the Electrical Code of the City of New York, latest edition and NYS DOT latest edition and Addenda.
    c. All applicable regulations of the local utility companies.
4. Safety and Health: Comply with applicable requirements of the Occupational Safety and Health Act, including most recent amendments and New York State safety, health and labor regulations and contract documents.
5. In the event of conflict between codes, the most restrictive requirements shall apply as interpreted by the Engineer.
6. Permits and Inspections:
    1) Underwriters' Certificate: Work Within Limits of the Contract: A New York Board of Fire Underwriters Inspection Certificate is required.
    2) Certificate of Inspection: Work Within Limits of the Contract: An inspection and certificate by the City of New York, Dept. of Public Works, Bureau of Electricity, is required.

3) NYC DOT DSL shall review and approve shop drawings, installation and final system.

Listings: Equipment and materials for which Underwriters' Laboratories, Inc. (UL) provides product listing service, shall be listed and bear the listing mark.

1. Alternately, ETL Testing Laboratories, Inc. Product Safety Testing Listing is acceptable if the listed product has been tested to the applicable UL Standard.

2. Equipment shall have New York City Board of Standards and Appeals listing as required.

SHOP DRAWINGS: Shop drawings shall be submitted for all equipment to be installed. Shop drawings shall include all required information and details to show compliance to the contract plans and specifications. Contractor shall submit shop drawings to Engineer for all site lighting equipment.

Shop Drawings shall include, but not be limited to the following:

1. Photovoltaic (PV) Panels.
2. Inverter & PV Cables.
3. Conduit and Wire
4. Pull Boxes, Junction Boxes
5. System and Equipment Grounding
6. PV Production Meter
7. Panelboard with circuit breakers
8. Rails and support assemblies
9. Junction boxes
10. Monitoring systems
11. LED Light Fixtures and Drivers
12. Misc. supports and equipment.

PK-ESCR 653.6 MEASUREMENT AND PAYMENT: For furnishing and installing electrical work in accordance with the specifications, contract drawings, and directions of the Engineer, the Contractor shall receive the **LUMP SUM** price bid.

The price bid shall be a **LUMP SUM** price for this item and shall include the cost of all labor, materials, equipment, and incidental expenses necessary and required for installing the electrical work with connection, and other items necessary or required to complete the work, including, but not limited to miscellaneous site work, permits, etc., in all accordance with the plans, specification, and as directed by the Engineer. The lump sum item for electric work will not include excavation, backfill and restoration of finished surface.

Payment will be made under:

ITEM NO.	ITEM	PAY ITEM
PK-ESCR-653	Electrical, Lighting and PV Work for Southern M&O Area 1 Canopy	LS
PK-ESCR-654	Electrical, Lighting and PV Work for Northern M&O Area 2 Canopy	LS

END OF SECTION

SECTION PK-ESCR 655 – ELECTRIC SERVICE AND DISTRIBUTION WORK AT CENTRAL M&O FACILITY

SECTION PK-ESCR 656 – ELECTRIC SERVICE AND DISTRIBUTION WORK AT NORTHERN M&O FACILITY

SECTION PK-ESCR 657 – ELECTRIC SERVICE AND DISTRIBUTION WORK AT AMPITHEATER AREA AND FLOODLIGHTING

SECTION PK-ESCR 658 – ELECTRIC SERVICE AND DISTRIBUTION WORK AT GRAND STREET FERRY

SECTION PK-ESCR 664 – ELECTRIC SERVICE AND DISTRIBUTION WORK AT EAST 10TH STREET BRIDGE STORAGE ROOM

SECTION PK-ESCR 692 – ELECTRIC CABINET AND PANEL WORK AT EAST RIVER HOUSES PARKING LOT

GENERAL: Under this item the Contractor shall furnish and install a complete Electric Service and Distribution work with all incidentals required and as shown on the drawings as specified herein. All work shall be performed in a neat and professional manner.

All materials to be furnished and all work to be performed shall be in strict compliance with the requirements of the latest specifications and standard practice of the New York City Electric Code. The Contractor shall submit shop drawings of all equipment to be furnished and drawings must be approved by the Engineer before beginning the manufacture of the equipment.

WORK INCLUDED: The work shall include, but shall not be limited to the following: Furnish and install and connect all items of labor and material for a complete electrical system as indicated on the drawings and specified herein. Small and sundry items not necessarily indicated or specified, but required for the complete installation, shall be included in the Contractor's proposal and incorporated in the Work.

1. Con-Ed CT Cabinet
2. Conduit and Wire
3. Pull Boxes, Junction Boxes
4. System and Equipment Grounding
5. Heavy Duty Safety Switch
6. Panelboard with circuit breakers
7. Misc. supports and equipment.

□□ Cabinet□

WORK NOT INCLUDED:

1. Concrete pads are paid for under ESCR-4.06 Concrete

ACCESSIBILITY: All work shall be installed so as to be readily accessible for operation, maintenance and repair. Minor deviations from the drawings may be made to accomplish this, but no changes shall be made without the prior approval, in writing, of the Engineer.

CODES, PERMITS AND CERTIFICATES: All items of labor and material shall be in accordance with the requirements of the latest edition of the New York City Electric Code, and the rules, regulations, standards, etc. of all other local or national agencies having jurisdiction. No materials shall be used that are not listed by the Underwriters' Laboratories and the N.Y. Board of Fire

Underwriters. In addition, all applicable regulations and requirements of Con-Edison shall apply to work under the Contract.

The Contractor shall pay all fees, give all notices, file all necessary drawings, obtain all permits and certificates of approval as may be required in connection with the Work under this Contract.

1. All materials and workmanship shall comply in all respects with the rules and regulations of the Electrical Code of the City of New York.

2. The materials and workmanship shall comply in every respect with the contract specifications and drawing and fulfill the full intent thereof.

CONTRACT DRAWINGS: The contract drawings are diagrammatic but shall be followed as closely as conditions at the site of work or the work of other trades will permit.

See contract drawings for equipment sizing, requirements, etc.

TESTS AND GUARANTEE: The entire electrical system and equipment furnished and installed under the Contract shall test free of shorts and grounds. Insulation resistance tests shall be performed on all wiring and equipment with instruments as approved. Insulation resistance as measured shall conform to the requirements of the New York City Electrical Code. The Contractor shall provide all equipment and personnel necessary to perform such tests. Performed tests shall be made in the presence of the Engineer.

ELECTRICAL SERVICE: Electric Service shall be at three phase, four wire, 60 Hertz, 120/208 volt power source as indicated on the drawings.

CONDUIT, HOT DIPPED GALVANIZED RIGID STEEL:

The ends of all conduits shall be carefully reamed before installation and after the application for the die. Where it becomes necessary to cut a length of conduit it shall be done with a hacksaw or a specially approved cutter. Care shall be taken to secure a square end on all conduit.

Provide No. 10 drag wire in all empty conduit raceways.

The entire conduit and wiring system shall be thoroughly grounded in an approved manner. Exposed connection of ground wires shall be suitable protected from mechanical injury with rigid conduit and approved clamps and fittings.

Running threads shall not be used. Where conduit with tapered threads cannot be coupled with standard conduit couplings, O.Z. Split Couplings or Erickson Couplings shall be used. Underground, or where coupling is to be covered with concrete, a watertight union shall be used. All male threads of steel conduit shall be coated with red lead of graphite base pipe compound. Do not paint female threads.

The excavation for the installation of the conduit is specified in other sections of this Contract. Payment limit lines are shown on the drawings.

All appurtenances, fittings, hangers, with RGS steel conduit shall be galvanized and asphaltum coated.

During installation, the conduit shall be plugged tightly with conduit caps at the close of each day's work or whenever work is discontinued for any length of time, to prevent the entrance of earth, water or other foreign matter. Paper or wood plugs are not acceptable.

After laying, all conduit runs shall be tested for clear bore and correct installation. Snaking the conduits shall be done in the presence of Engineer. Any conduit, which rejects the mandrel, shall be removed at once, the Contractor bearing all costs of replacing defective conduit and restoring the ground or structure around it.

The end of each conduit one inch and smaller shall be provided with a lock nut and bushing where it enters a sheet steel cabinet box, etc. For conduits 1-1/4 inches and larger, insulated grounding bushings shall be used. Care shall be taken to see that all conduits form a permanent and continuous ground return back to the service ground connection point. Ground bushings shall be bronze type "RBLG", O.Z., or equal.

All conduit shall be manufacturer's best grade delivered to the site in full pipe lengths, each trademarked by the manufacturer. All conduit connectors shall have insulated throats.

All ground connections to water pipes shall be made with type KH ground clamp Penn-Union, O.Z., Thomas & Betts, or approved equal.

In general, conduits shall be installed exposed and shall run parallel or perpendicular to wall lines.

Exposed conduits shall be securely fastened in place with PVC coated galvanized pipe clamps, racks, or other approved means, in a manner acceptable to the Engineer. Wood hangers and perforated sheet metal hanger straps will not be permitted. Spacing of conduit supports shall not exceed five (5) feet. All auxiliary items for fastening conduits shall be furnished and installed by the Contractor.

Conduit shall be of such sizes that required conductors may be pulled without strain or injury. Standard manufactured elbows shall be used for all conduits 1-1/4 inch or larger.

The routing of conduits, as shown on the plans, is diagrammatic. Before installing any work, it shall be the responsibility of the Contractor to examine the working layouts of all other trades to determine exact locations and clearances. Where equipment is installed by other trades requiring connection by the Contractor, the Contractor shall likewise determine exact conduit entry locations from shop drawings or actual piece of equipment. Modifications to conduit runs shown on the drawings as found necessary, shall be made without additional cost to the City, all subject to the Engineer's approval.

Conduits crossing construction expansion Joints shall be installed with approved expansion fittings, 0Z type AX or EX or approved equal, and provided with approved flexible grounding bonds bypassing the fitting.

Where it becomes necessary to offset exposed conduit runs due to construction conditions, etc., such offsets shall be made using conduit "EL" fittings, or other means as approved by the Engineer.

Final connections to motors shall be made with Type 'UA' sealtite flexible conduit with external copper bonding strap.

All piping, conduits or other items to be imbedded in new concrete shall be inspected and approved by the Engineer prior to concrete placement.

WIRE AND CABLE: Unless otherwise specified, all wires and cables shall be single copper conductor type Cross-Linked polyethylene (XLPE) moisture and heat resistant thermoplastic insulated with Jacket USE-2; for use at 600 volts A.C. rated 75 degrees C. operating temperature suitable for wet and dry locations equal in every respect to the latest Insulated Power Cables Engineers' Association (IPCEA) Specifications(Latest Revision). The wire and cables shall have Underwriters' Laboratories, Inc. label and be surface printed throughout the entire length at two-foot intervals with permanent identifying markings indicating manufacturers' name, size, type, and voltage.

Wire shall be no more than ninety (90) days old when purchased. All wire and cables shall be furnished on reels or spools and in lengths required to minimize splicing.

All conductors No. 10 AWG and smaller shall be solid; No. 8 AWG and larger, stranded except for ground wire which shall be solid.

Wires and cables No. 2 AWG and smaller shall be of continuous solid colors in accordance with the New York City Electric Code.

All wires larger than No. 2 AWG shall be colortape coded at all terminations.

All wire and cables shall be 98 percent conductivity copper as manufactured by Rome Cable Company, Essex Wire & Cable, Okonite, Anaconda Wire and Cable Company, or other acceptable manufacturer.

CABLE TEST DATA: No cables shall be shipped from the manufacturer's plant until the final certified test data is received from cable manufacturer stating that such cables are approved by the Engineer and they conform with the New York City Electric Code requirements.

JUNCTION AND PULL BOXES: Submittals Product Data: Catalog sheets, specifications and installation instructions. Samples: One of each product.

Threaded type Boxes: Malleable iron with cadmium of galvanized finish for use with steel conduit, as manufactured by Appleton Electric Co., Crouse-Hinds Co., or 0Z/Gedney Co., or approved equal.

1. Malleable iron boxes shall be provided with galvanized malleable iron covers with approved gaskets, held by Everdur or approved equal machine screws. All threaded entries that are not used shall be closed by threaded pipe plugs, red leaded.

Preparation: Before proceeding with the installation of junction boxes, check the locations with the Engineer and have same approved.

Specific Purpose Outlet Boxes: Use to mount equipment when available and suitable for job conditions. Unless otherwise specified, boxes shall be threaded type for exposed conduit system, PVC coated.

Supplementary Junction and Pull Boxes: In addition to junction and pull boxes indicated on the drawings and required by the NEC, provide supplementary junction and pull boxes as follows:

1. When required to facilitate installation of wiring.
2. At every third 90 degree turn in conjunction with raceway sizes over 1".
3. At intervals not exceeding 100' in conjunction with raceway sizes over 1".
4. The box sizes shall be in accordance with code requirements.

ELECTRICAL CABINET: Electric service and distribution cabinets mounted on concrete pad. cabinet to be stainless steel type 316. Continuous hinge rainproof NEMA 4X enclosure. sized to fit all equipment required. Contractor to submit cabinet layout drawing with all equipment and associated clearances.

SERVICE SWITCH: Service switch to be heavy duty, NEMA 4X stainless steel with removable ground-neutral link. Switch to be 208/120 volt, 3 phase, 4 wire, 600 volt rated. Service switch to be located within electrical service and distribution cabinet.

CON-ED CT CABINET: Cabinet shall be rated NEMA 3R and shall be constructed from the code gauge galvanized or galvanized steel. Bus Bar shall be Silver or Tin Plated and shall be sized per the NEC. Cabinet design shall have provisions for a solid door to allow for the meter enclosure to be mounted remotely from the cabinet. Contractor to only use only manufacturer’s approved lug and other mounting accouris. Only factory prefabricated knockouts on the enclosure shall be used. Electric Service requires a disconnect switch before the CT Cabinet.

CUTTING AND PATCHING: The Contractor shall perform all cutting and patching of work that may be required. All patching shall be done by qualified personnel.

The Contractor shall coordinate with all trades so that all cutting and patching required is performed in a timely manner.

Wherever possible, the Contractor shall provide sleeves for new concrete, to avoid cutting and patching. Install sleeves and equipment shown on electrical drawings in forms, before concrete is placed. Where utility sleeves are not installed before concrete is placed, complete all cutting and core drilling required to install all new conduit or other required new items as shown on the drawings. Holes cut for new conduit shall be done with core-boring tools. Holes for large items shall have edges neatly cut with a power saw.

The Contractor shall be responsible for the patching of all openings to provide a snug and waterproof seal. Any other damages to the structures shall be properly repaired at no additional cost.

The use of power driven impact tools will not be permitted to install openings.

INSTALLATION OF CONDUCTORS IN CONDUIT OR RACEWAY: No wire shall be pulled until the conduit and/or raceway system for a specified section or area is complete.

All feeders and mains shall be of the sizes shown on the Contract Drawings all in accordance with these specifications. All wires to be installed in any one conduit shall be pulled in at the same time and directly from reels. For pulling wires and cables, an approved lubricant may be used. All wires shall be continuous without splices between boxes, panelboards, cabinets, etc. Sufficient slack shall be left in all boxes for splicing wires and making proper connections.

All cable taps and splices in boxes shall be made secure with solderless compressive type connectors as manufactured by Burndy or approved equal. Connectors shall be installed with approved hydraulic tools to assure a permanent mechanically secure high conductivity joint. Insulation tape shall be No. 23 M.M.M. or approved equal. Jacket tape shall be applied over the insulation tape to a thickness of two times thickness of cable jacket. Jacket tape shall be water-resisting type Scotch No. 88 M.M.M. or approved equal. All splices and tape shall be waterproof.

All wiring in troughs shall be neatly tied and racked. Wires shall be grouped as to the equipment they serve, and shall have brass tags attached thereto. Tags shall have engraved lettering indicating panel or equipment source, circuit number and equipment served.

All conduit shall be carefully cleaned before and after erection. All ends shall be free from burrs and inside surfaces shall be free from all imperfections likely to injure the wires and cables. Immediately before the wires and cables are pulled into any conduit run, such completed conduit run shall be snaked with a steel band to which shall be attached an approved tube cleaner equipped with an approved spherical mandrel of a diameter not less than 85 percent of the nominal inside diameter of the conduit. All conduit through which this mandrel does not pass shall be removed and replaced by the Contractor at the Contractor's own expense.

PANELBOARDS AND CIRCUIT BREAKERS: Panelboard shall be 208/120 volt, 3 phase, 4 wire copper bus bar with NEMA 4X stainless steel enclosure. Circuit breakers to be bolt on type. Panel to be rated for 22 KAIC. Branch disconnecting devices shall consist of circuit breakers, built in molded composition, of type, voltage, capacity and trip element ratings and number of poles as indicated on the panel schedule. The branch circuit breaker units shall be quick-break, trip-free toggle-mechanism type with distinct Off and On indications and clearly numbered with circuit numbers and trip ratings. The shall be interchangeable and operable in any position, and removable from the front of the panel without disturbing adjacent units. Circuit breaker

interrupting capacity shall be 22,000 symmetrical amps (R.M.S.). Circuit breakers shall be bolt on type, Cutler Hammer type adjustable trip Series C or approved equal.

CIRCUIT BREAKERS: Branch disconnecting devices shall consist of circuit breakers, built in molded composition, of type, voltage, capacity and trip element ratings and number of poles as indicated on the panel schedule. The branch circuit breaker units shall be quick-break, trip-free toggle-mechanism type with distinct Off and On indications and clearly numbered with circuit numbers and trip ratings. They shall be interchangeable and operable in any position, and removable from the front of the panel without disturbing adjacent units. Circuit breaker interrupting capacity shall be 22,000 symmetrical amps (R.M.S.). Circuit breakers shall be bolt on type, Cutler Hammer type adjustable trip Series C or approved equal.

GROUNDING: The entire conduit system and equipment shall be permanently, continuously, and effectively grounded. The conduit system shall be made electrically continuous by using threaded fitting with joints made up tight. Use a conductive copper compound as a lubricant on all pipe threads. Where boxes or fittings are made of sheet steel having no threaded hubs, electrical continuity shall be obtained by using grounding bushing type IBC-L-BC series, 0.Z. or approved equal.

All grounding shall be in strict accordance with Art. 8 of the New York City Electrical Code and other agencies having jurisdiction. Contractor shall furnish and install all items of material and labor for the grounding systems, including conduits, cables, clamps, fittings and connections.

All underground ground connections to be made by exothermic welds.

BONDING: All boxes and metal frames, conduits, etc. shall be bonded in an approved manner, using not less than #6 AWG gauge, bare, stranded, tinned, soft drawn or annealed copper wire.

REGULATORY REQUIREMENTS: Special caution note: The Contractor is fully aware that the work involved is an active roadway and in some cases requires additional safety precautions. The Contractor is responsible to protect workers in the performance of the work.

Codes:

1. General: Comply with the requirements of American National Standards Institute (ANSI), National Electrical Manufacturers Association (NEMA), Underwriters Laboratories (UL), New York City Department of Transportation, (NYCDOT), New York State (NYS), New York City (NYC), & Federal, etc. codes referred to in these specifications, except where requirements of these specifications are more restrictive or stringent. Such codes shall be the date of latest revision in effect at the time of performing the work, unless the date is given.
2. Building Code: Comply with the requirements of the New York State Uniform Fire Prevention and Building Code and New York City Building Code.
3. Electrical Codes:
    a. Work Area: Electrical Work shall conform to the requirements of the latest edition of the NYC Electrical Code (NYCEC) and National Electrical Code (NEC), and all state and local codes. The Engineer shall be the sole judge of the interpretation of these rules and requirements.
    b. Work and Off-Site Staging Area: Electrical Work shall conform to the requirements of the Electrical Code of the City of New York, latest edition and NYS DOT latest edition and Addenda.
    c. All applicable regulations of the local utility companies.
4. Safety and Health: Comply with applicable requirements of the Occupational Safety and Health Act, including most recent amendments and New York State safety, health and labor regulations and contract documents.

5. In the event of conflict between codes, the most restrictive requirements shall apply as interpreted by the Engineer.
6. Permits and Inspections:
    1) Underwriters' Certificate: Work Within Limits of the Contract: A New York Board of Fire Underwriters Inspection Certificate is required.
    2) Certificate of Inspection: Work Within Limits of the Contract: An inspection and certificate by the City of New York, Dept. of Public Works, Bureau of Electricity, is required.
    3) NYC DOT DSL shall review and approve shop drawings, installation and final system.

Listings: Equipment and materials for which Underwriters' Laboratories, Inc. (UL) provides product listing service, shall be listed and bear the listing mark.

1. Alternately, ETL Testing Laboratories, Inc. Product Safety Testing Listing is acceptable if the listed product has been tested to the applicable UL Standard.

2. Equipment shall have New York City Board of Standards and Appeals listing as required.

SHOP DRAWINGS: Shop drawings shall be submitted for all equipment to be installed. Shop drawings shall include all required information and details to show compliance to the contract plans and specifications. Contractor shall submit shop drawings to Engineer for all site lighting equipment.

Shop Drawings shall include, but not be limited to the following:

1. Con-Ed CT Cabinet
2. Conduit and Wire
3. Pull Boxes, Junction Boxes
4. System and Equipment Grounding
5. Heavy Duty Safety Switch
6. Panelboard with circuit breakers
7. Misc. supports and equipment.
8. Cabinet

MEASUREMENT AND PAYMENT: For furnishing and installing electrical work in accordance with the specifications, contract drawings, and directions of the Engineer, the Contractor shall receive the **LUMP SUM** price bid.

The price bid shall be a **LUMP SUM** price for this item and shall include the cost of all labor, materials, equipment, and incidental expenses necessary and required for installing the electrical work with connection, and other items necessary or required to complete the work, including, but not limited to miscellaneous site work, permits, etc., in all accordance with the plans, specification, and as directed by the Engineer.

The lump sum item for electric work will not include excavation, backfill and restoration of finished surface.

Item No.	Item	Pay Unit
PK-ESCR 655	ELECTRIC SERVICE AND DISTRIBUTION WORK AT CENTRAL M&O FACILITY	LS
PK-ESCR 656	ELECTRIC SERVICE AND DISTRIBUTION WORK AT NORTHERN M&O FACILITY	LS

PK-ESCR 657	ELECTRIC SERVICE AND DISTRIBUTIONWORK AT AMPITHEATER AREA AND FLOODLIGHTING	LS
PK-ESCR 658	ELECTRIC SERVICE AND DISTRIBUTION WORK AT GRAND STREET FERRY	LS
PK-ESCR 664	ELECTRIC SERVICE AND DISTRIBUTION AT EAST 10TH STREET BRIDGE STORAGE ROOM	LS
PK-ESCR 692	ELECTRIC CABINET AND PANEL WORK AT EAST RIVER HOUSES PARKING LOT	LS

END OF SECTION

SECTION PK-ESCR 660 – SPORTS FIELD FLOOD LIGHTING – FIELDS 1 & 2

SECTION PK-ESCR 661 – SPORTS FIELD FLOOD LIGHTING – FIELD 6

SCOPE OF WORK:

Under this item the Contractor shall furnish and install a complete sports floodlighting system with Floodlight poles, luminaires, crossarm assemblies, mounting brackets, pole wiring fusing and aiming with all incidentals required and as shown on the drawings as specified herein All work shall be performed in a neat and workmanlike manner and all requirements of the General Conditions and Special Conditions shall apply to all items and materials furnished and installed under the Contract.

All materials to be furnished and all work to be performed shall be in strict compliance with the requirements of the latest specifications and standard practice of the New York City Electric Code. The Contractor shall submit shop drawings of all equipment to be furnished and drawings must be approved by the Engineer before beginning the manufacture of the equipment.

WORK INCLUDED:

The work shall include, but shall not be limited to the following: Furnish and install and connect all items of labor and material for a complete electrical system as indicated on the drawings and specified herein. Small and sundry items not necessarily indicated or specified, but required for the complete installation, shall be included in the Contractor's proposal and incorporated in the Work.

1. System and Equipment Grounding
2. Recreational Sports Lighting fixtures, poles , Crossarm assemblies, mounting brackets and connections
3. Pole wiring, fuses, fuse holders, fuse cabinet, aiming, etc. as required for a complete system.

The primary goals of this lighting project are:

1. Balance of lighting factors: Minimize spill light to adjoining properties and glare to the players, spectators and neighbors. Minimize uplight component to preserve a dark sky. Maximize playability and safety to the players.
2. Life-cycle Cost: To reduce operating costs, the preferred lighting system shall be energy efficient and cost effective to operate. System energy consumption is to be maintained over the life of the system and will not increase as the system ages.

REGULATORY REQUIREMENTS:

Codes:

1. General: Comply with the requirements of American National Standards Institute (ANSI), National Electrical Manufacturers Association (NEMA), Underwriters Laboratories (UL),

New York City Department of Transportation, (NYCDOT), New York State (NYS), New York City (NYC), & Federal, etc. codes referred to in these specifications, except where requirements of these specifications are more restrictive or stringent. Such codes shall be the date of latest revision in effect at the time of performing the work, unless the date is given.

2. Building Code: Comply with the requirements of the New York State Uniform Fire Prevention and Building Code and New York City Building Code.

3. Electrical Codes:

   a. Work Area: Electrical Work shall conform to the requirements of the latest edition of the NYC Electrical Code (NYCEC) and National Electrical Code (NEC), and all state and local codes. The Engineer shall be the sole judge of the interpretation of these rules and requirements.

   b. Work and Off-Site Staging Area: Electrical Work shall conform to the requirements of the Electrical Code of the City of New York, latest edition and NYS DOT latest edition and Addenda.

   c. All applicable regulations of the local utility companies.

4. Safety and Health: Comply with applicable requirements of the Occupational Safety and Health Act, including most recent amendments and New York State safety, health and labor regulations and contract documents.

5. In the event of conflict between codes, the most restrictive requirements shall apply as interpreted by the Engineer.

6. Permits and Inspections:

   1) Underwriters' Certificate:

      a. Work Within Limits of the Contract: A New York Board of Fire Underwriters Inspection Certificate is required.

Listings: Equipment and materials for which Underwriters' Laboratories, Inc. (UL) provides product listing service, shall be listed and bear the listing mark.

1. Alternately, ETL Testing Laboratories, Inc. Product Safety Testing Listing is acceptable if the listed product has been tested to the applicable UL Standard.

2. Equipment shall have New York City Board of Standards and Appeals listing as required.

CODES, PERMITS AND CERTIFICATES**:**

All items of labor and material shall be in accordance with the requirements of the latest edition of the New York City Electric Code, and the rules, regulations, standards, etc. of all other local or national agencies having jurisdiction. No materials shall be used that are not listed by the Underwriters' Laboratories and the N.Y. Board of Fire Underwriters. In addition, all applicable regulations and requirements of Con-Edison shall apply to work under the Contract.

The Contractor shall pay all fees, give all notices, file all necessary drawings, obtain all permits and certificates of approval as may be required in connection with the Work under this Contract.

Before final payment will be made, the Contractor shall furnish the Parks with final certificates of approval from the New York Board of Fire Underwriters, which shall certify:

1. That all materials and workmanship comply in all respects with the rules and regulations of the Electrical Code of the City of New York.
2. That the materials and workmanship comply in every respect with the contract specifications and drawing, and fulfill the full intent thereof.

TESTS AND GUARANTEES:

The entire electrical system and equipment furnished and installed under the Contract shall test free of shorts and grounds. Insulation resistance tests shall be performed on all wiring and equipment with instruments as approved. Insulation resistance as measured shall conform to the requirements of the New York City Electrical Code. The Contractor shall provide all equipment and personnel necessary to perform such tests. Performed tests shall be made in the presence of the Engineer.

All items of labor and material provided under the contract shall be guaranteed free of defects for a period of one year from the date of completion. Any defects appearing in this period shall be immediately corrected by the Contractor upon notification by the Engineer without additional charge.

SPORTS LIGHT WARRANTY:

The fixtures, poles and cross-arm assemblies shall be warranted (Limited Warranty) for a period of seven (7) years warrants to the purchaser that all assemblies shall be free from defects in materials and workmanship from the date of shipment. A copy of the manufacturer's warranty shall be submitted.

ELECTRICAL SERVICE:

Power for the floodlighting shall be obtained from a new Con-Edison service at three phase, four wire, 60 Hertz, 120/208 volt power source as indicated on the drawings. The Contractor is responsible to fully coordinate the work with Con-Edison.

LIGHTING PERFORMANCE:

A. Illumination Levels and Design Factors: Playing surfaces shall be lit to an average target illumination level and uniformity as specified on the contract drawings. Lighting calculations shall be developed, and field measurements taken on the grid spacing with the minimum number of grid points of 84 for baseball outfield & multi-purpose field and 25 points for baseball infield.

B. Average illumination level shall be measured in accordance with the latest IESNA Sports and Recreational Area Lighting requirements.

C. Illumination levels to meet target values in accordance with latest IESNA Sports and Recreational Area Lighting.

ENVIRONMENTAL LIGHT CONTROL:

A. Light Control for Luminaires: All luminaires shall utilize multi-layer optical system including silicone TIR and reflector optics designed to minimize glare and spill light while maintaining the poles for aerial play. No full-cutoff luminaires shall be permitted.

B. Spill Control: To minimize impact on adjacent properties, maximum horizontal spill shall not exceed 0.5fc 150' from the edge of the fields. No fixture mounted anywhere on the poles shall be aimed above the horizon. No up-lighting will be permitted.

C. Photometric Report: A photometric report that shows aiming points of each luminaire shall be provided to demonstrate the capability of achieving the specified performance.

MATERIALS

SPORTS LIGHTING GENERAL DESCRIPTION:

Sports Lighting System shall consist of light poles, cross arm assemblies, luminaires, junction boxes, aiming devices, wiring, cable, and assembly mounting hardware, pre-wired from handhole to fixtures.

All components shall be designed and manufactured as a system. Pole structure, luminaires, control and integral driver system shall be provided from an approved manufacturer.

The entire sports lighting system (poles, crossarms, wiring and fixtures) must be supplied by a single entity that underwrites the warranty. The complete lighting system shall consist of the listed equipment as follows:

1. Hot-dip galvanized painted steel poles.
2. LED luminaires: complete, integral unit, factory assembled and vacuum sealed.
3. Crossarms: factory pre-wired and assembled, hot-dip galvanized steel.
4. All wiring from the load side of the breaker to the luminaire.
5. Aiming method for alignment and realignment of fixtures.

The entire pole fixture assembly shall be capable to withstand the design forces without damage to any part or assembly. The contractor is responsible to repair and or replace any damaged equipment as directed.

The fixture and pole manufacturer is responsible to furnish the contractor with bolt tightening torque requirements and mounting and aiming instructions and include in the shop drawings.

SPORTS LIGHT POLE AND CROSS ARM:

Poles cross arms and accessories shall be as manufactured by Carolina High Mast (CHM) Industries, Saginaw, TX, MSM, Eaton or approved equal.

POLE STRUCTURE:

A. The poles shall be designed for allowable stresses in accordance with latest AASHTO Standard Specification for Structural Supports for Highway Signs, Luminaires and Traffic Signals.

B. The pole structure shall consist of a modular pole assembly. This shall consist of no more than two shaft components. No single component shall weigh over 1500 pounds to allow handling by light duty equipment in order to minimize damage to site.

C. Each section of pole shaft material shall be of single-ply material and be made from a single sheet of steel with no circumferential welded splices. The pole shafts cross-section shall be round. The pole shaft sections shall be high-strength steel meeting the requirements of ASTM A570 GR65 (65 ksi yield) and/or ASTM A595 GR55 (55 ksi yield).

D. Pole shaft sections shall be hot dip galvanized in accordance with the requirements of ASTM A123 specifications. Each shaft assembly must be completely coated, inside and out, in a single dip. Double dipping will not be permitted in compliance to USGA (United States Galvanizing Association) recommended practices and procedures to prevent acid entrapment. All miscellaneous connecting hardware shall be galvanized in accordance with ASTM A153 specifications.

E. The structure shall be designed for the combined effective projected area (EPA) and weight of all applicable accessories (i.e. luminaires, crossarms, and other components such as speakers/mounting brackets). Concrete poles or pole sections are not acceptable due to excessive weight and mobilization costs.

F. Wind loads – structure shall be based on the latest specifications of AASHTO and designed to withstand wind speeds of 120 MPH.

2.1

CROSSARM ASSEMBLY:

A. All crossarms shall be factory pre-wired and assembled.

B. All crossarms shall be hot dip galvanized in accordance with the requirements of ASTM A123 specifications

C. All wiring/connections should be factory assembled from the fixture mounting location to the base of the pole.

D. Strain relief device(s) must be factory installed in pre-wired crossarm assembly to ensure no weight or tension is placed on electrical connections.

E. All factory pre-wiring must be done in a manner that requires no electrical connections inside the pole or crossarm assembly to be made in the field.

Submit Shop Drawings for lighting fixtures, floodlights and poles with the following information:

1. The fixtures shall be photographically illustrated. No line Drawings will be accepted unless accompanied by a separate photograph or sample.

2. The details of the assembled fixtures shall be illustrated or described and shall include, but not be limited to, the mounting methods, locations and type of hinges and latches, gasketing

methods, enclosure assembly methods, location of wireways, input wattage, output lumens, actual dimensions of the fixtures, gauge and types of metals used, finishes and corrosion protection, fusing, wiring, etc. Include all dimensions and weights etc.

3. The following photometric data shall be furnished with each fixture:

   Floodlighting Fixtures: Photometric test report indicating the lighting distribution of the fixtures for all angles between 0 degree and 80 degrees minimum, beam efficiency, total efficiency, beam spread in horizontal and vertical degrees, NEMA type and average maximum candlepower. In addition horizontal Isofootcandle curves shall be submitted in addition to the independent test lab photometric test report.

4. Provide a complete photometric diagram, Isofootcandles on 10' grid, of the site for courts to be illuminated indicating the illumination levels and aim points for all fixtures.

5. Provide footcandle array for courts including average maintained, minimum, maximum, ave/min, max/min, CV, # points, initial lumens, LLF design lumens, etc.

6. Provide photometrics and calculations demonstrating conformance with reducing off-site and sky light pollution using the methodology and design criteria per USGBC LEED 2.2 SSc8 'Reducing Light Pollution', ambient illumination zone LZ3 medium.

FLOODLIGHT FIXTURES:

The floodlight fixtures shall be manufactured by Carolina High Mast, GE Lighting Solution, Eaton or approved equal.

A. LUMINAIRE: The luminaires must be an integral unit with maximum distance of 18 inches between power supply, driver and LEDs to minimize power loss and EMI (electromagnetic interference).

B. The fixture shall meet the following specifications:

1. General:
   a. UL Certified for wet locations
   b. Operating temperature range rating between -40°C and +40°C
   c. Certified to UL 844 and ANSI C136.31, 3G vibration requirements
   d. IP Rating: IP66
   e. Lumen output < 92,000
   f. Power consumption < 640W
   g. Efficacy of ≥120 lumens/watt
   h. Correlated Color Temperature (CCT) of 5700K

i. CRI of ≥ 70

j. L90 lumen depreciation rating: >55,000 hours certified based on IES recommended 6x measured data extrapolation limitation. No extrapolation beyond 6X permitted.

k. Weigh ≤ 75lbs, including power supply, bracket, and controls

l. Fixture weight evenly distributed between 2-piece assembly of light head and power/controls box

m. Effective projected area (EPA) ≤ 1.8 ft2

n. Pre-aiming for orientation around the mounting location bolt

o. Pre-aiming for tilt on the yoke with locking pin with increments under 2o

p. Luminaires must be listed on the QPL of Design Lights Consortium® to ensure minimum quality and energy-efficiency standards are met for qualification in energy efficiency programs.

2. Integrated and Thermally Isolated Power Supply:

a. Wide input range of 120VAC to 277VAC.

b. Power factor: >0.96 @ 277VAC and >0.95 @480VAC

c. THD (Total Harmonic Distortion) ≤20%

d. Dim to off capability

e. Luminaire shall contain two power supplies (drivers) such that if one driver is not operational the other continues to power all the LEDs in the light head.

f. Drivers, controls connections and all wiring connections shall be contained in an IP66 enclosure. No exposed connections permitted. No additional junction box permitted.

g. Driver case temperature shall be maintained at or below 55°C at 40°C ambient in order to preserve long term reliability

h. No remote ballast solutions are permitted because of parasitic power consumption and high installation costs.

3. Optical system:

a. Fixture shall have a glass sealed glass cover to protect the optics and LEDs. No exposed optics permitted.

b. Luminaire shall incorporate silicone TIR optics in combination with reflector optics over each LED source in order to minimize glare perception. LED light source shall be Chip-on-Board (COB) technology.

4. Construction

a. Luminaire shall and be installed as a 2-piece assembly of light head and

power/controls for ease on handling and installation.

b. Power shall be integral to fixture assembly and separated from the LED thermal heatsink by greater than 2 inches to maintain reliability.

c. Aluminum shall be chromate conversion coated and then two-stage architectural grade powder- coated for long term resistance to corrosion and UV exposure

Floodlights shall have internal glare louvers, and meet Marine Rateng (UL 1598A).

WELDING:

Welding shall be in accordance with American Welding Society (AWS) Structural Welding Code D1.1, Sections 1 through 8 and shall be performed by welders certified in accordance with the AWS Code.

LIGHTNING PROTECTION:

All structures shall be equipped with lightning protection meeting standards established by NFPA 780 (National Fire Protection Association) and UL 96. There shall be provided at each structure at least three copper-clad steel ground rod of not less than 5/8" in diameter and not less than 10-0" in length.

The ground rod(s) shall be connected to the structure by a copper main down conductor. This conductor shall be not less than a #2/0 copper conductor

The main down conductor shall extend from the base of the steel pole to the ground rod(s) and be bonded to the equipment ground. All metal components on the pole shall be bonded to the pole.

Provide air terminals on all poles. Lighting air terminals pole at both ends of crossarm to extend 24" above floodlight fixtures.

BC-50L Series, Raco Inc.'s 1212 Series, or Thomas & Betts Corp.'s 3870 Series, or approved equal.

SPLICE CONNECTORS FOR EQUIPMENT GROUNDING CONDUCTOR:

Exothermic Type Weld: Erico Products Inc.'s Cadweld Process, Genesis Systems, NVent or approved equal.

Compression Connectors: AMP Special Industries' Ampact Grounding System, Burdy Corp.'s Hyground System, or Thomas & Betts Corp.'s Grid and Ground Rod System, or approved equal.

Indent Type: Burndy Corp.'s Hydent, or Thomas and Betts Corp.'s Compression Connectors, Graybar or approved equal.

INSULATED GROUNDING BUSHINGS:

Appleton Electric Co.'s GIB-50 Series, Efcor Inc.'s 56-50-4 Series, Midwest Electric Mfg. Corp.'s GLL Series, OZ/Gedney Co.

EXECUTION:

SPORTS LIGHT INSTALLATION:

Provide, mount and wire floodlights complete with junction boxes, on each sports light pole as indicated on the Drawings and specified herein.

Pole Finish: Contractor shall touch up any marred or scratched surfaces after erection of poles to the satisfaction of the Engineer.

FIXTURE AIMING:

Aiming Diagram: The manufacturer shall provide for record a computer derived point by point illuminance calculation and an aiming diagram showing the aiming point on the field. Aiming diagram shall show the fixture arrangement as viewed from the rear of the crossarm assembly and horizontal and vertical angles and field coordinates of the aiming point as well as photometric ID number.

Aiming Requirements for Pre-Aimed Units: The fixtures shall be factory-mounted to the crossarms and aimed according to the diagram. The reflectors shall be removed, packed and shipped separately. The aiming position of the socket holder shall be secured, marked and protected during shipping. Each fixture shall be identified and each crossarm shall be identified to match the corresponding pole.

NIGHT TIME AIMING:

Provide necessary personnel and material including final aiming diagram to demonstrate to the Engineer the proper floodlight aiming.

Mark all aiming points from manufacturers aiming diagram on finished grade with temporary marking, i.e., 10" diameter paper plates secured to ground.

Adjust and readjust any fixture that the Engineer determines is not properly aimed until it is finally approved. The cost of personnel climbing the poles and adjusting the fixtures shall be included in the contractors bid.

The Engineer will determine the acceptability of the lighting uniformity. Readjust fixtures until accepted by the Engineer at no additional cost.

The contractor can use a laser aiming device to demonstrate aiming points and aim the fixture at no additional cost.

GLARE CONTROL:

At completion of installation the contractor with the engineer shall travel the adjacent streets to determine if there is any objectional glare associated with the lighting system. The engineer will note the problem area to the contractor.

The contractor is responsible to re-aim the fixtures in question and/or install glare shield and repeat the above procedure until the engineer is satisfied.

The above shall be included in the contractors bid and there shall be no additional payments for testing, re-aiming or adding glare shields.

Glare shield shall be structurally able to withstand the wind forces and not vibrate during the wind force.

The contractor shall immediately replace any fixtures with damaged parts including hardware, shield, housing, fuse, lamp, sockets etc.

The decision of the Engineer is not final until the system is accepted.

GROUNDING:

The entire conduit system and equipment shall be permanently, continuously, and effectively grounded. The conduit system shall be made electrically continuous by using threaded fitting with joints made up tight. Use a conductive copper compound as a lubricant on all pipe threads.

Where boxes or fittings are made of sheet steel having no threaded hubs, electrical continuity shall be obtained by using grounding bushing type IBC-L-BC series, 0.Z. or approved equal.

All grounding shall be in strict accordance with Art. 8 of the New York City Electrical Code and other agencies having jurisdiction. Contractor shall furnish and install all items of material and labor for the grounding systems, including conduits, cables, clamps, fittings and connections.

All ground connections to water pipes shall be made with Type KH ground clamp Penn-Union, Thomas & Betts, Burndy or approved equal.

BONDING:

All boxes and metal frames, conduits, etc. shall be bonded in an approved manner, using not less than #6 AWG gauge, bare, stranded, tinned, soft drawn or annealed copper wire.

SHOP DRAWINGS:

Shop drawings shall be submitted for all equipment to be installed. Shop drawings shall include all required information and details to show compliance to the contract plans and specifications. Contractor shall submit shop drawings to Engineer for all site lighting equipment.

Shop Drawings shall include, but not be limited to the following:

1. System and equipment grounding
2. Recreational sports lighting fixtures, poles and connections
3. Pole wiring, fuses, fuse holders, fuse cabinet, aiming, etc. as required for a complete system.
4. Miscellaneous supports and equipment.
5. Floodlight fixtures with point-by-point photometrics

MEASUREMENT AND PAYMENT

For furnishing and installing electrical work in accordance with the specifications, contract drawings, and directions of the Engineer, the Contractor shall receive the **LUMP SUM** price bid.

The price bid shall be a **LUMP SUM** price for this item and shall include the cost of all labor, materials, equipment, and incidental expenses necessary and required for installing new sports light poles, fixtures and all electrical work with connections and other items necessary or required to complete the work, including, but not limited to miscellaneous site work, permits, etc., in all accordance with the plans, specification, and as directed by the Engineer.

ITEM NO.	**ITEM**	**PAY ITEM**
PK-ESCR-660	Sports Field Floodlighting Fields 1 and 2	LUMP SUM
PK-ESCR-661	Sports Field Floodlighting Field 6	LUMP SUM

END OF SECTION

SECTION PK-ESCR 662 – LED SOLAR LIGHT

SECTION PK-ESCR 663 – LED 120 VOLT LIGHT SIMILAR TO SOLAR LIGHT

GENERAL: Under this item, the Contractor shall furnish and install Solar Powered LED Light, complete with fittings, including light pole, mounting brackets, hardware, wiring harness, PV panels, batteries, LED Cobrahead luminaire, controller, and all required accessories, in accordance with the plans, details, specifications, and directions of the Engineer.

INTENT:

1. It is the intent of this item shall be supplied by a single manufacturer.
2. The Contractor shall coordinate the work and delivery of the Solar Powered LED Light between manufacturer and supply all parties involved with the relevant information required to construct, finish, and install the Solar Powered LED Light.
3. All Electrical Components, Devices, and Accessories: Listed and labeled as defined in NFPA 70, by a qualified testing agency, and marked for intended location and use.
4. All construction must conform to all local codes designed by NY State and NYC.
5. Comply with NFPA 70.
6. Comply with NECA 1 and NECA 413.
7. LED 120 volt light similar to solar light to look identical to solar lights (pole, brackets, etc.), but luminaire to be 120 volt with solar panels, batteries, solar engine, controller provided as spare not operating/connected equipment.

MANUFACTURER: The Solar Powered LED Light is manufactured by Sol, inc. 2637 E Atlantic Blvd #40620, Pompano Beach, FL 330623210SW 42nd Avenue, Palm City, FL 34990, Tel. 1-800-959-1329, Fax. 772-872-5321, Email: info@solarlighting.com, WWW.solarlighting.com or approved equal.

MATERIALS: All materials of construction should be UL listed and shall comply with specification and drawings or approved equal.

1. Pole: 6” Long / 3.5”O.D. Schedule 40 straight aluminum pole, standard 20ft. pole to cut to the size.
2. Color: Black Aluminum
3. Solar Engine: CE 2004-108-CE, EN 61547 for emissions and immunity.
3. LED Luminaire: XSP1HO High Output LED Luminaire, Type II Long, Type III Medium, Type IV Medium, 3000K, 280W, Black Grey powder coat
4. Solar PV Panel: 310 Watt Panel, tilted at 30.
5. Batteries: Carmanah Solar AGM Deep Cycle solar battery mounted high with battery enclosure
6. Controller/ Driver: EverGEN®
7. Mounting Hardware, Brackets, and Wiring Harnesses
8. Steel Bar Reinforcement: Reinforcement shall meet the requirements of the applicable paragraphs of the NYCDOT Standard Highway Specifications, the N.Y.C. Building

Code, and the latest ASTM specification for "Deformed and Plain Billet-Steel Bars for Concrete Reinforcement", Designation A-615 and in accordance with the Item "Steel Bar Reinforcement". Reinforcement shall be of the sizes and dimensions shown on the plans.

EXECUTION:

Pole Installation: The Contractor shall refer to Installation and Owner's Manual for the Pole assembling, Installation, Operation, and Maintenance for the Solar Powered LED Light.

SUBMITTALS:

Manufacturer's Catalog Cut Sheets, Product and Technical Data: Pole, LED Luminaire, Solar PV Panel, Battery, controller/ Driver

Color and Finish Sample: Contractor shall submit two (2) samples of shop-applied finish coats and color.

Shop Drawings: Shop drawings are required. Shop Drawings shall show general layout including pole foundation details with complete anchoring and foundation with dimensional information. Provide point by point photometric calculations for esplanade and walkway areas where solar lights are being provided.

Warranty:

Manufacturer's Warranty:

1. Battery: Ten (10) Years
2. Solar PV Panel Output Power: Minimum Twenty (20) Years
3. Mounting Hard: Ten (10) Years
4. Pole(provided by Manufacturer): Lifetime Excluding Finish
5. LED Fixture: Ten(10) year Limited Excluding Finish
6. Electronics (Charge Controller, LED Driver): Ten (10) Years

The Warranty shall name the City of New York as the Project Owner and Purchaser.

MAINTENANCE: The Contractor shall refer to Operation and Maintenance in Installation and Owner's Manual for the Solar panel cleaning, Fuse, LED Fixture and Battery Replacement.

MEASUREMENT & PAYMENT: For furnishing and installing Solar Powered LED Light or LED 120 Volt Light Similar to Solar Light, complete, in accordance with the plans, specifications, and directions of the Engineer, the Contractor shall receive the unit price bid.

The price bid shall be unit price for **EACH** Solar Powered LED Light and LED 120 Volt Light Similar to Solar Light furnished and installed and shall include the cost of all labor, materials, and equipment required concrete foundation, reinforcing steel, excavation, backfill, and all other incidentals necessary to complete the work in accordance with the plans and specifications, to the satisfaction of the Engineer.

Item No.	Item	Pay Unit
PK-ESCR 662	LED SOLAR LIGHT	EA
PK-ESCR 663	LED 120 VOLT LIGHT SIMILAR TO SOLAR LIGHT	EA

END OF SECTION

SECTION PK-ESCR 669 – 2" DIA. HIGH DENSITY POLYETHYLENE (HDPE) SCHEDULE 80 CONDUIT

GENERAL: Furnish and install a High Density Polyethylene (HDPE) Schedule 80 conduit and fittings for exterior underground branch circuit to in compliance with National Electrical Code and NYC Electric Code.

The item shall include the labor material and equipment for installation of conduit with all required accessories such as couplings, bends, elbows, nipples, unions, reducers, etc. All the work shall be done in compliance with code requirement. All associated material for complete installation of conduit shall be included under each item.

MATERIALS: The High Density Polyethylene conduit material must conform to UL 651A and ASTM F2160 (Solid Wall). All conduit supplied shall be clearly marked with the appropriate ASTM as certified. Nominal conduit size is determined by an inside diameter.

SPECIFICATIONS FOR CONDUIT:

1. Conduits installed shall be High Density Polyethylene (HDPE) Schedule 80 with minimum wall thickness of 0.218".
2. All fittings for High Density Polyethylene (HDPE) conduit shall be of an approved type and shall be HDPE Schedule 80.
3. Conduits shall be free from blisters, cracks or injurious defects and shall be reamed at each end. All bends shall be of a long sweep free from kinks and of such easy curvature as to permit the drawings in of cable without injury.
4. Conduit ends, shall extend into pull or junction boxes, one and one-half inch (1½") and be equipped with approved bushings.
5. Each length of conduit shall bear the manufacturer's Trademark or Stamp.
6. Conduits ends shall clean cut, straight and true.
7. Contractor shall be responsible for all excavation, backfilling, and restoration necessary for the installation of conduits as shown on drawing.
8. All capped conduits shall be provided with a HDPE Schedule 80 Steel cap securely fastened to end of conduit.
9. When necessary to connect conduits in other than the regular manner, Contractor shall utilize couplings approved by an engineer.
10. All conduits which are installed underground shall be not less than twenty-four inches (24") below final grade, unless otherwise indicated on the Contract Drawings.
11. Conduit bends shall be made without kinking conduit or appreciably reducing the internal diameter. The radius of the inner edge of any field bend shall be not less than six (6) times the normal diameter of the conduit. Where changes of directions are necessary, long gradual sweeps shall be installed rather than short bends. Pull boxes shall be installed as required to provide a maximum of three (3) right angle bends between pulling points.
12. The Contractor shall bend conduit as required to avoid interferences and provide proper clearance.

13. Conduits and fittings shall be manufactured by Dura-Line, Blue Diamond Industries or approved equal.

14. The Contractor shall test and clean all conduits installed under this Contract and all existing conduits to be re-used by pulling a test ball and brush of approved size through each conduit. If any obstructions remain so that the cleaning devices cannot be rodded or pulled through clearly, the conduit shall be replaced. After testing and cleaning, each spare conduit shall be left with a ½" nylon pull line in the conduit. Each spare conduit shall be sealed by the use of "Duxseal", or approved equal, at the manholes.

15. To seal cables inside conduits entering and leaving manholes, apply untarred, unoiled jute packing around outside of and in the crotch between the cables in such a manner as to completely fill the duct. Use short pieces of the jute (2" to 6") and pack them tightly. Insert approved duct sealing material, taking care to secure a perfect bond around edge of conduit and cables. Cables shall be kept apart from edge of conduit by sealing material.

16. The HDPE conduit shall be rated for temperature range for installation, from -20 degrees C to 90 degree C operating temperature for cables.

17. The HDPE conduit shall be rated for Chemical and corrosion resistance.

MEASUREMENT & PAYMENT: Payment will be made at the unit price bid for the total length in feet of **HIGH DENSITY POLYETHYLENE (HDPE) SCHEDULE 80 CONDUIT** actually installed as measured in the field along the longitudinal axis of each length of conduit by the Engineer.

The price bid for this item shall be a unit price per linear foot of **HIGH DENSITY POLYETHYLENE (HDPE) SCHEDULE 80 CONDUIT** shall include the cost of furnishing all labor, materials, and equipment to install, secure in place, clean and mandrel the conduit runs shown on the drawings. Conduit shall be installed complete with all couplings, fittings, bushings, sweeps, elbows, spacers, tie wire, drag lines and fiber plugs, straps, etc.

Item No.	Item	Pay Unit
PK-ESCR-669	2" DIA. High Density Polyethylene (HDPE) Schedule 80 Conduit	LF

END OF SECTION

SECTION PK-ESCR 645 – 1" DIA. HOT DIPPED/HEAVY GAUGE GALVANIZED RIGID STEEL CONDUIT

SECTION PK-ESCR 670 – ¾" DIA. HOT DIPPED/HEAVY GAUGE GALVANIZED RIGID STEEL CONDUIT

SECTION PK-ESCR 671 – 1½" DIA. HOT DIPPED/HEAVY GAUGE GALVANIZED RIGID STEEL CONDUIT

SECTION PK-ESCR 672 – 2" DIA. HOT DIPPED/HEAVY GAUGE GALVANIZED RIGID STEEL CONDUIT

GENERAL: Furnish and install hot-dipped galvanized rigid, steel conduit for exterior underground branch circuit to in compliance with National Electrical Code and NYC Electric Code.

The item shall include the labor material and equipment for installation of conduit with all required accessories such as couplings, bends, elbows, nipples, unions, reducers, strap screws, bolts, nuts, anchors, etc. All the work shall be done in compliance with code requirement. All associated material for complete installation of conduit shall be included under each item.

SPECIFICATIONS FOR CONDUIT:

1] Conduits installed shall be heavy gauge rigid galvanized steel for exterior underground.
2] All fittings for galvanized metal conduits shall be of an approved type and shall be malleable iron castings, hot dipped galvanized. Conduit fittings shall be provided with gasket and metal covers and shall be equal to Crouse-Hinds Form 8.
3] Conduits shall be free from blisters, cracks or injurious defects and shall be reamed at each end. All bends shall be of a long sweep free from kinks and of such easy curvature as to permit the drawings in of cable without injury.
4] Conduit ends, except for threaded cast boxes, shall extend into pull or junction boxes, one and one-half inch (1½") and be equipped with approved bronze ground bushings. Locknuts and bushings shall be provided where conduits terminate in metallic boxes.
5] Conduits shall be of the sizes noted on Contract Drawings which are indicated as the nominal inside diameter and shall be of standard weight and equal in quality as called for in the Standard Specifications of the American Society for Testing Materials. Minimum size conduit shall be ¾". Each length of conduit shall bear the manufacturer's Trademark or Stamp.
6] Conduits shall have standard conduit threads, clean cut, straight and true. The threads shall be protected during transit and installation, and shall be of sufficient length to permit the proper coupling connections as noted heretofore.
7] Contractor shall be responsible for all excavation, backfilling, and restoration necessary for the installation of both the exterior and the interior conduits as shown on drawing.
8] Long running threads will not be permitted on any part of the work.
9] All capped conduits shall be provided with a galvanized cast iron cap securely screwed into a clean cut factory threaded end of conduit.
10] When necessary to connect conduits in other than the regular manner, Contractor shall use "Erickson" or similar couplings, or approved equal.
11] All conduits which are installed underground shall be not less than twenty-four inches (24") below final grade, unless otherwise indicated on the Contract Drawings.
12] Conduit bends shall be made without kinking conduit or appreciably reducing the internal diameter. All bends in conduit of 2 inch size or larger shall be made with a hydraulic or power pipe bender. The radius of the inner edge of any field bend shall be not less than

six (6) times the normal diameter of the conduit. Where changes of directions are necessary, long gradual sweeps shall be installed rather than short bends. Pull boxes shall be installed as required to provide a maximum of two (2) right angle bends between pulling points.

13] The Contractor shall bend conduit as required to avoid interferences and provide proper clearance.

14] Where conduits pass through foundation walls, concrete or floors, O.Z. Type "FSK" fitting or approved equal, of proper diameter, shall be installed.

15] Conduits and fittings shall be manufactured by Allied, Triangle, Crouse-Hinds Company, or approved equal.

16] The Contractor shall test and clean all conduits installed under this Contract and all existing conduits to be re-used by pulling a test ball and brush of approved size through each conduit. If any obstructions remain so that the cleaning devices cannot be rodded or pulled through clearly, the conduit shall be replaced. After testing and cleaning, each spare conduit shall be left with a ½" nylon pull line in the conduit. Each spare conduit shall be sealed by the use of "Duxseal", or approved equal, at the manholes.

17] To seal cables inside conduits entering and leaving manholes, apply untarred, unoiled jute packing around outside of and in the crotch between the cables in such a manner as to completely fill the duct. Use short pieces of the jute (2" to 6") and pack them tightly. Insert approved duct sealing material, taking care to secure a perfect bond around edge of conduit and cables. Cables shall be kept apart from edge of conduit by sealing material.

MEASUREMENT & PAYMENT: Payment will be made at the unit price bid for the total length in linear feet of **HOT-DIPPED/ HEAVY GAUGE GALVANIZED RIGID STEEL CONDUIT** actually installed as measured in the field along the longitudinal axis of each length of conduit by the Engineer.

The price bid for this item shall be a unit price per linear foot of **HOT-DIPPED/ HEAVY GAUGE GALVANIZED RIGID STEEL CONDUIT** shall include the cost of furnishing all labor, materials, and equipment to install, secure in place, clean and mandrel the conduit runs shown on the drawings. Conduit shall be installed complete with all couplings, fittings, bushings, sweeps, elbows, spacers, tie wire, drag lines and fiber plugs, straps, splice and junction boxes, etc.

Item No.	Item	Pay Unit
PK-ESCR 645	1” DIA. Hot Dipped/Heavy Gauge Galvanized Rigid Steel Conduit	LF
PK-ESCR 670	3/4" DIA. Hot Dipped/Heavy Gauge Galvanized Rigid Steel Conduit	LF
PK-ESCR-671	1½" DIA. Hot Dipped/Heavy Gauge Galvanized Rigid Steel Conduit	LF
PK-ESCR-672	2" DIA. Hot Dipped/Heavy Gauge Galvanized Rigid Steel Conduit	LF
PK-ESCR-673	3" DIA. Hot Dipped/Heavy Gauge Galvanized Rigid Steel Conduit	LF
PK-ESCR-674	4" DIA. Hot Dipped/Heavy Gauge Galvanized Rigid Steel Conduit	LF

END OF SECTION

SECTION PK-ESCR 675 – TELEPHONE CONDUIT – 4" DIA.

WORK: Under this item, the Contractor shall furnish and install **TELEPHONE CONDUIT** of the required size including PVC pipes with all hardware and fittings underground as directed by the Engineer. All necessary straps, clamps, hangers and fastening devices shall be furnished and installed as a part of this item.

INTENT: The intent of this item is to install the PVC pipe as a conduit underground, to pull through future telephone wiring without disturbing the paths and pavements. Unless otherwise directed, the conduit shall be four (4”) inches in diameter for the entire length from building to curb.

MATERIALS:

Conduit: Shall be PVC Type 40 Conduit for applications in underground, direct burial applications in accordance with the National Electrical Code (Article 347). The pipe, under this item, shall be furnished and installed with couplings, elbows, bends, etc., as required.

Conduit shall be equal to Carlon Plus 40, 90°C, UL rated, manufactured by Carlon, or approved equal. Material shall comply with NEMA Specification TC-2 (Conduit), TC-3 fittings UL-514), and UL-651 (Standard FOR rigid non-metallic conduit). The conduit and fittings shall carry a UL label (on each 10 foot length of conduit and stamped molded on every fitting).

The conduit shall be made from polyvinyl chloride compound which includes inert modifiers to improve weatherability, heat distortion. Clean rework material, generated by the manufacturer’s own conduit production, may be used by the same manufacturer, provided the end products meet the requirements of this specification.

The conduit and fittings shall be homogeneous plastic material free form visible cracks, holes or foreign inclusions. The conduit bore shall be smooth and free of blisters, nicks or other imperfections, which could harm conductors or cables.

Conduit, fittings and cement shall be supplied by the same manufacturer to assure system integrity.

Testing and Acceptance Criteria: Conduit and fittings shall be tested in accordance with the testing requirements defined in NEMA TC-2, NEMA TC-3, & UL -651 and UL-514 (fittings). The acceptance criteria shall be as given in the same standards.

INSTALLATION: All conduit and fittings shall be solvent cemented in applications in accordance with instructions from the manufacturer.

In installing the conduit, particular care must be taken in cutting it to the proper length so that the ends will fit exactly into the outlet boxes. Where conduits terminate in cabinets they shall be neatly arranged and all ends shall be at the same level. The ends of all conduits shall be carefully plugged with a bushette so as to avoid the entrance of foreign materials or moisture and kept so until the telephone service feeder is installed. The ends of the conduit in boxes and similar apparatus and devices shall be furnished with end bushings to avoid the damage during pulling the cable

Underground: The PVC pipe shall be installed underground minimum twenty-four (24") inches below grade on six (6”) inches layer of sand bed. All necessary couplings, elbows, bends T fittings

or any other fitting and hardware required shall be installed. The pipes shall not be installed without proper soil bearing. The pipes joints shall be slip-in type with cementing material as described in previous paragraph. All conduits must slope away from building to prevent water from entering the building.

Warning tape: shall be installed six inches below finished grade minimum to cover full width throughout the length of the trench. The warning tape shall be Model “Terra Tape Extra Stretch” as manufactured by Reef Industries, or approved equal.

Drag Line: All empty pipes/conduits shall be installed with a three-eighths (3/8”) inch nylon drag rope.

MEASUREMENT & PAYMENT: The quantity of **TELEPHONE CONDUIT** to be paid for under this item shall be the number of **LINEAR FEET** (laying length) of conduit installed measured in final position, furnished and installed in accordance with the plans, specifications, and directions of the Engineer.

The price bid shall be a unit price per **LINEAR FOOT** of telephone conduit furnished and installed and shall include the cost of all labor, materials, equipment and incidental expenses necessary including hardware, fittings, drag line and warning tape to complete the work, all in accordance with the plans and specifications to the satisfaction of the Engineer.

Excavation and sand bed for pipe installation shall be paid separately under the items "Unclassified Excavation" .

Item No.	Item	Pay Unit
PK-ESCR-675	Telephone Conduit – 4" DIA.	LF

END OF SECTION

SECTION PK-ESCR 676 – PULLBOXES WITH FRAME AND COVER 24" L X 18" W X 26" D, TYPE 2418 (2-R)

SECTION PK-ESCR 677 – PULLBOXES WITH FRAME AND COVER 36" L X 24" W X 26" D, TYPE 3624 (5-R)

SECTION PK-ESCR 678 – PULLBOXES WITH FRAME AND COVER 48"L X 24" W X 26" D, TYPE 4824 (6-R)

GENERAL: Under this item the contractor shall furnish and install concrete boxes, cast iron frame and cast iron cover with all required accessories in compliance with Contract Drawings and Specifications.

The concrete boxes shall be made of pre-cast reinforced concrete. The box shall include cast iron frame and cover.

The contractor shall refer to Contract Drawings & NYC DOT Division of Street Lighting for construction details. All work shall be done in compliance with the standard details and specifications given on the above drawing.

The item title dimensions shown are clear inner dimensions of the concrete box. Overall dimension shall be larger for walls and bottom thickness of the box. All non-current carrying metal components within the box shall be bonded to ground as shown on the drawings in compliance with National Electrical Code. All ground bonding connections shall be included under this item.

These concrete boxes shall be furnished with required knockouts for conduit entrances. All unused knockouts shall be sealed with waterproofing concrete mixture.

Excavation: The excavation and backfill for this item is not included in this item. Contractor shall under this item, cut, dig or drill trenches or pits to install manholes.

Construction

1] **Construction:** Precast concrete similar to property line box except as detailed on the drawings. Floors to be free of pockets to slope ¼" per foot to drain points. Refer to Contract Drawings for additional Details.

2] **Drains:** Cast iron, slotted or perforated, hinged cover, 9" dia., 4" outlet, with a short length of outlet pipe terminating in a drywell below the floor.

3] **Frame & Cover:** Cast iron, with sizes indicated on Drawings, heavy duty roadway type. Cast iron of uniform quality free from blowholes, hard spots, shrinkage distortion or other defects. Cast iron shall be well cleaned by shot blasting and coated with asphalt paint resulting in a smooth, tough and tenacious coating; conform to ASTM spec. for gray iron.

Manufacture castings true to pattern, of non-rocking design or shall have bearing surfaces machined to prevent rocking and rattling.

4] **Covers:** Indented solid top design, with two drop handles; cast integral letters at least 2" high reading " N.Y.C. Parks Electrical" on upper side.

5] **Accessories:** Provide embedded inserts in pullbox walls for cable racks. Provide pulling-in irons in walls opposite each duct bank entrance and in floor opposite pullbox opening.

Pulling-in irons shall be securely fastened to reinforcing bars. Provide racks at 3' centers on pullbox perimeter, to be clear or present and future conduit entries. Provide racks and a set of porcelain insulators for per set of cables for each entering conduit.

6] **Grounding:** Wherever continuous ground wire from system grounding is not available for bonding, providing a ¾" driven ground rod, at least 10' long or as required to reach ground water. Extend top 6" above pullbox floor. Connect all non-current carrying metal parts in the pullbox to the ground rod with a #6 AWG bare copper conductor.

7] **Installation:** Set pullbox to approximate grade using a minimum of a 24" deep brick throat. Add or remove bricks as required to achieve final cover elevation.

8] **Cable Racks:** Provide fiberglass cable racks in all pullboxes larger than 18" width or 36" length (interior) for supporting cables.

MEASUREMENT & PAYMENT For furnishing and installation of this item Pull boxes with all accessories described in the specifications, the contractor shall furnish unit bid price.

The bid price shall be a unit price for each Pull Box installed with cover and frame and shall include the cost of all labor, materials and equipment necessary to complete the work in accordance with the specifications, and to the satisfaction of the Engineer.

The payment shall be made for actual number of Pull Boxes installed.

Item No.	Item	Pay Unit
PK- ESCR-676	Pullboxes with Frame and Cover 24"L X 18" W X 26" D, Type 2418 (2-R)	EA
PK-ESCR-677	Pullboxes with Frame and Cover 36"L X 24" W X 26" D, Type 3624 (5-R)	EA
PK-ESCR-678	Pullboxes with Frame and Cover 48"L X 24" W X 26" D, Type 4824 (6-R)	EA

END OF SECTION

SECTION PK-ESCR 679 – ELECTRICAL MANHOLES

GENERAL: Under this item the contractor shall furnish and install concrete manholes, cast iron frame and cast iron cover with all required accessories in compliance with park standard details.

The concrete boxes shall be made of pre-cast reinforced concrete. The box shall include cast iron frame and cover.

The contractor shall refer to Con-Edison standard for M11-6 manhole for construction details. All work shall be done in compliance with the standard details and specifications given on the above drawing.

The item title dimensions shown are clear inner dimensions of the concrete box. Overall dimension shall be larger for walls and bottom thickness of the box. All non-current carrying metal components within the box shall be bonded to ground as shown on the drawings in compliance with National Electrical Code. All ground bonding connections shall be included under this item.

These concrete boxes shall be furnished with required knockouts for conduit entrances. All unused knockouts shall be sealed with waterproofing concrete mixture.

Excavation: The excavation and backfill for this item is not included in this item. Contractor shall under this item, cut, dig or drill trenches or pits to install manholes. Contractor shall also ensure that spaces around manholes are restored to **original** or better condition.

Construction

1] **Construction:** Precast concrete or field constructed as detailed on the drawings. Floors to be free of pockets to slope ¼" per foot to drain points. Refer to Parks Standard Details Sheet #65 for additional Details.

2] **Drains:** Cast iron, slotted or perforated, hinged cover, 9" dia., 4" outlet, with a short length of outlet pipe terminating in a drywell below the floor.

3] **Frame & Cover:** Cast iron, with sizes indicated on Drawings, heavy duty roadway type. Cast iron of uniform quality free from blowholes, hard spots, shrinkage distortion or other defects. Cast iron shall be well cleaned by shot blasting and coated with asphalt paint resulting in a smooth, tough and tenacious coating; conform to ASTM spec. for gray iron.

Manufacture castings true to pattern, of non-rocking design or shall have bearing surfaces machined to prevent rocking and rattling.

Units shall meet AASHTO H20 wheel loading requirements. Manufacture, workmanship and certified proof-load tests shall conform to ASASHTO M306-89.

A. Cast iron: ASTM A48, Class 30B or 35B.

B. Frames:

Round, 6-1/2 inches high.

Minimum bearing area of the flange on the masonry: 645 sq. inches.

Minimum weight: 156 lbs.

C. Covers:

Round, approximately 1-1/2 inches thick at the perimeter bearing surface.

Minimum one inch wide perimeter bearing surface.

Perforaced checkered surface design.

Concealed type pick holes.

Minimum weight: 215 lbs.

4] **Covers:** Indented solid top design, with two drop handles; cast integral letters at least 2" high reading " N.Y.C. Parks Electrical" on upper side.

5] **Accessories:** Provide embedded inserts in manholes walls for cable racks. Provide pulling-in irons in walls opposite each duct bank entrance and in floor opposite pullbox opening. Pulling-in irons shall be securely fastened to reinforcing bars. Provide racks at 3' centers on pullbox perimeter, to be clear or present and future conduit entries. Provide racks and a set of porcelain insulators for per set of cables for each entering conduit.

6] **Grounding:** Wherever continuous ground wire from system grounding is not available for bonding, providing a ¾" driven copperclad ground rod, at least 10' long or as required to reach ground water. Extend top 6" above manhole floor. Connect all non-current carrying metal parts in the pullbox to the ground rod with a #6 AWG bare copper conductor with exothermic welds.

Manholes Containing Feeder Circuits Over 600 Volts:

A. Install rod electrode in each manhole near a wall. Install rod electrode thru floor into earth below manhole with 4 inches protruding for ground connection.

B. Bond manhole cover frame, steel cable support assemblies and splices (cable shields for non-lead type cables) to rod electrode with No. 6 AWG bare copper ground conductor.

C. Make connection to rod electrode with exothermic type weld or compression connectors.

7] **Installation:** Set mahole to approximate grade using a minimum of a 24" deep brick throat. Add or remove bricks as required to achieve final cover elevation.

8] **Cable Racks:** Provide fiberglass cable racks in all pullboxes for supporting cables. Cable

Support Assemblies (Steel): A.B. Chance Co.'s 1225 rack, 1231 Series support arms, 1121 porcelain insulators, or McGraw-Edison's DU10B Series rack, DU9S Series support arms, DE12U porcelain insulators.

Cable Support Assemblies (Nonmetallic): Underground Devices Inc.'s CR36 rack, RA Series support arms.

A. Depth: Install manholes at depth required to bring top of manhole covers 2 inches above finished grade in lawns, and flush with paved surfaces of walks, roads, or parking spaces.

B. Bricked-Up Throat: Mortar brick into place. Set manhole frame with mortar. Waterproof exterior of throat with minimum thickness of 3/32 inch elastic bituminous plastic cement coating.

C. Cable Supports: Install racks, support arms and insulators of size and number to provide one insulator (or equivalent space on nonmetallic support arms) on each cable support assembly for each conduit entering the manhole:

MEASUREMENT & PAYMENT For furnishing and installation of this item “MANHOLE” with all accessories described in the specifications, the contractor shall furnish unit bid price.

The bid price shall be a unit price for each manhole installed with cover and frame grounding, cable supports, etc. and shall include the cost of all labor, materials and equipment necessary to complete the work in accordance with the specifications, and to the satisfaction of the Engineer and Utility.

The payment shall be made for actual number of manholes installed.

The price shall not include the cost of excavating. This cost shall be paid under separate item “Unclassified Excavation”.

Item No.	Item	Pay Unit
PK-ESCR 679	Electrical Manholes	EA

END OF SECTION

SECTION PK-ESCR 666 #10 AWG COPPER, 600V WIRE

SECTION PK-ESCR 667 #8 AWG COPPER, 600V WIRE

SECTION PK-ESCR 668 #4 AWG COPPER, 600V WIRE

SECTION PK-ESCR 680 – #12 AWG COPPER, 600V WIRE

SECTION PK-ESCR 681 – #6 AWG COPPER, 600V WIRE

SECTION PK-ESCR 682 – #2 AWG COPPER, 600V WIRE

SECTION PK-ESCR 683 – #1/0 AWG COPPER, 600V WIRE

SECTION PK-ESCR 684 – #4/0 AWG COPPER, 600V WIRE

SECTION PK-ESCR 685 – 500 KCMIL COPPER, 600V WIRE

SECTION PK-ESCR 686 #2/0 AWG COPPER, 600V WIRE

GENERAL: Under this item the contractor shall furnish and install new wire and cable as specified on drawings.

The work shall include but not limited to furnishing and installation of cable in conduit and boxes including cleaning of the conduits, splices, terminations and final connection on line and load sides of Electrical existing installations and newly supplied under this contract and supplied by others.

All work shall be done in compliance with National Electrical Code and NYC Electric Code.

1] All wiring shall be in conduit as shown on drawing and protected from mechanical injury by metal coverings. All electrical parts shall be approved by the National Board of Fire Underwriters and the Bureau of Electrical Control and shall comply with the National Electric Code. The cable shall be U.L. Listed for exterior application Type USE-2 with EPR insulation.

2] Wire & cable up to 600v shall be copper and have current carrying capacity not less than indicated and shall conform to the standards of the Underwriter's Laboratories, Inc. Conductor sizes shall be as indicated on the drawings. 75C insulation shall be used for all size of wire, unless otherwise noted on plans and in accordance with the requirements of N.Y.C. Dept. of Buildings, Bureau of Electrical Control.

3] Factory color coding for cable shall be as follows: 120/208 volts black, red, blue, and white; white conductors shall serve as neutral conductors.

4] Unless otherwise particularly approved, no wires shall be pulled in until the conduit system is completed. No grease or oil shall be used to facilitate the pulling of the wires; only approved pulling compound shall be used. All wire shall be continuous between pull boxes & lamp posts.

5] Joints that become necessary in circuit work at the outlets shall be made with approved pressure connectors. All joints shall be covered with an insulation equal to that on the conductors. Approved pressure connectors, Ideal Wingnuts, Scotch-lock, Buchanan, Thomas and Betts or as accepted, shall be used in lieu of solder and tape. The cost of splices shall be a part of this item.

6] All existing conduits are to be cleaned prior to cable installation.

7] New conduit to be used for installation of cable shall be properly cleared from one end to the other with mandrel approximately 85% diameter of the conduit size.

SPLICING:

1] Splices in the run are not permitted.

2] Splicing shall conform to the National Electrical Code in accordance with the requirements of the Department of Buildings, Bureau of Electrical Control, “Specification for Single Conductor Wire and Cable”.

3] Maintain splices and joints in accessible enclosures, where easy inspection is available.

4] Join, tap and terminate stranded 120/208 volt conductors #6 AWG and larger by means of long barrel copper butt splice crimp sleeves with oil stops, approved taps and two hole compression lugs. Exclude connectors and lugs of the types which apply set screws directly to conductors. Apply pressure indent type connectors, taps and lugs utilizing tools manufactured specifically for the purpose and having features preventing their release until the final pressure has been exerted on the lug or connector. Heat shrink sleeve over entire splice. 3M or equal scotch coat over entire shrink sleeve. Wrap one half lapped layer of electrical tape over entire splice. Burndy, T & B, MAC products or approved equal.

   Except where wire nuts are used, build up insulation over conductor joints to a value, equal both in thickness and dielectric strength, to that of the factory applied conductor insulation. Insulation of conductor taps and joints shall be by means of half-lapped layers of rubber tape, with an outer layer of friction tape, by means of half-lapped layers of approved plastic electric insulating tape, or (in the case of bolted type connector joints) by means of split insulating casings molded specifically to insulate the particular connector & conductor, and fastened with stainless steel or non-metallic snaps or clips.

Protection: The Contractor shall protect and be responsible for the Contractor’s materials, tools, work and equipment until completion thereof and until the acceptance of same by the Engineer.

CABLE SAMPLES:

1] The Engineer shall take samples of each size of cable not less than ten feet in length for tests. These samples will be taken by the Engineer in the field and the Engineer may select same from any reel at random.

2] The Engineer may order any reel delivered to a City approved laboratory for test. Transportation of such reel to and from the laboratory and all costs of testing shall be at the expense of the Contractor.

CABLE TAGS: Furnish and install approved tags with the wire identification permanently marked thereon so that all wires may be traced from box to box, where splices occur, install a tag on the wire on all sides of every splice. Tag shall equal to Panduit PLM marker ties.

TESTING AFTER INSTALLATION: The cable shall be tested after installation but before final connections for the continuity and insulating. The insulation resistance must comply with the NETA recommended testing requirements.

MEASUREMENT & PAYMENT: The quantity of wires to be paid for under each of the items shall be the number of linear feet of wire installed in accordance with the plans, specifications and directions of the Engineer.

The price bid shall be a unit price per linear foot, including splices, furnished and installed and shall include the cost of all labor, materials, equipment and incidental expenses necessary to complete the work, including testing, all in accordance with the plans and specifications to the satisfaction of the Engineer.

Item No.	Item	Pay Unit
PK-ESCR 666	#10 AWG Copper, 600V Wire	LF
PK-ESCR 667	#8 AWG Copper, 600V Wire	LF
PK-ESCR 668	#4 AWG Copper, 600V Wire	LF
PK-ESCR 680	#12 AWG Copper, 600V Wire	LF
PK-ESCR 681	#6 AWG Copper, 600V Wire	LF
PK-ESCR 682	#2 AWG Copper, 600V Wire	LF
PK-ESCR 683	#1/0 AWG Copper, 600V Wire	LF
PK-ESCR 684	#4/0 AWG Copper, 600V Wire	LF
PK-ESCR 685	500 KCMIL Copper, 600V Wire	LF
PK-ESCR 686	#2/0 AWG Copper, 600V Wire	LF

END OF SECTION

SECTION PK-ESCR 688 – STAINLESS STEEL ENCLOSURE FOR GAS METER

PK-ESCR 688.1 **WORK:** Under these Items, the Contractor shall furnish and erect **STAINLESS STEEL ENCLOSURE FOR GAS METER** of the type and sizes shown on the plans, in accordance with the plans, specifications, and directions of the Engineer.

PK-ESCR 688.2 **MATERIALS:**

STAINLESS STEEL ENCLOSURE shall be constructed of stainless steel 304 angles, plates and mesh of the sizes shown on the plans. All material shall conform to Specification AISI 304.

FABRICATION – STAINLESS STEEL ENCLOSURE: Enclosure shall be fabricated in strict accordance with the plans and approved Shop Drawings. Posts and rails shall be formed into panels of the shapes on the plans and joints completely welded with welds of proper size and shape; all welds ground smooth to a neat finish. Connections shall be provided as indicated on the plans.

Posts and pickets shall, in all cases, be truly vertical. Rails and bars shall be parallel to grade as shown on the plans.

DOOR and DOOR FRAME: shall be constructed of stainless steel 304 angles and mesh of the size shown on the plans.

HINGES: shall be w210-10, Heavy Duty Stainless Steel Hinge, 7.87 L x 0.91 DIA., as manufactured by Sierra Pacific, Long Beach, CA; Stanley Hardware, New Britain, CT; Shanon Gates and Railings, Deer Park, NY, or approved equal.

PADLOCK: The Contractor shall furnish one padlock for each enclosure. The padlocks shall be American No. 5571 as manufactured by American Lock Co., Crete, IL., or approved equal. All padlocks for the same park facility shall be keyed alike, with two inch (2") wide by three-quarter inch (3/4") thick brass body, maximum security, five (5) pin tumblers with hardened alloy steel chrome plated shackle no less than three-eighth inch (3/8") diameter and two inch (2") clearance (elongated shackle). A galvanized steel chain, nine inches (9") long shall be fastened to the door and body of the lock. The chain shall be five-sixteenths inch (5/16") by one and three-eighths inch (1-3 /8"). The Contractor shall furnish two (2) keys for each padlock.

PK-ESCR 688.3 **INSTALLATION:** The enclosures shall be erected as shown on the contract drawings**.**

Any steel enclosure not set plumb and true to line and grade shall be removed and replaced at the Contractor's expense. The Contractor shall maintain the enclosure during the life of the contract and shall repair replace all members that are disturbed, damaged, or destroyed.

PK-ESCR 688.4 **SUBMITTALS:** Shop Drawings: shall be submitted prior to manufacture.

PK-ESCR 688.5 **MEASUREMENT AND PAYMENT:**

The quantity of **STAINLESS STEEL ENCLOSURE** to be paid for shall be the number of **EACH** ENCLOSURE furnished and erected complete, in accordance with the plans, specifications, and directions of the Engineer.

Item No.	Item	Pay Unit
PK-ESCR 688	STAINLESS STEEL ENCLOSURE FOR GAS METER	EA

END OF SECTION

SECTION PK-ESCR 690 – CONDUIT INTERIOR SEALING FITTING

GENERAL: Under this item the contractor shall furnish and install new Conduit Interior Seal Fitting specified on drawings in compliance with National Electrical Code and NYC Electric Code.

The item shall include the labor material and equipment for installation of Conduit Seal with all required accessories such as Cables, Screws, Fittings, Frames/Seals, Lubricant etc. All the work shall be done in compliance with code requirement. All associated material for complete installation of Conduit Interior Seal shall be included under each item.

GENERAL SPECIFICATIONS:

1. All Electrical Components, Devices, and Accessories: Listed and labeled as defined in NFPA 70, by a qualified testing agency, and marked for intended location and use.
2. All construction must conform to all applicable codes.
3. Comply with NFPA 70.
4. Comply with NECA 1 and NECA 413.
5. An onsite evaluation is required to determine conduit and wiring requirements before Conduit Seal Installation.
6. Any change to the Installation detail must be approved by The Engineer.
7. Conduit Interior Seal must be watertight and dust tight manufactured by Roxtec Inc.
8. Contractor to provide Shop Drawings, Catalog Sheets, Installation Instructions and etc.
9. All Conduit Interior Sealing work is specified in drawings and specification but not limited to it.

MATERIALS:

All work material should be according manufacturer is specified in drawings and specification.

ROXTEC Frames:

1. RG M or approved equal

ROXTEC Seals:

1. H3 UG Seal or approved equal

ROXTEC Modules:

1. RM Modules or approved Equal

Sealing Components:

Contract shall use ROXTEC lubricant to provide a correct compression and a secure seal.

1. ROXTEC Natural Grease Lubricant 25ML ALT0000003000.
2. ROXTEC Assembly Gel 30ML ALT0000004000.

Fittings:

1. EN 1.4404 Fitting
2. ROXYLON Rubber
3. MC6S M6x70 AD Screws

INSTALLATION:

1. Contractor shall coordinate with manufacturer for On Site installation orientation and post installation inspection for safe on-site installation.

2. Install systems in accordance with UL systems, and manufacturer's specifications.
3. Thoroughly clean surfaces and spaces to receive materials, removing foreign matter such as dirt, dust, moisture, rust, laitance, mill scale, oil, paint, lacquer, form coatings, water repellents and protective coatings.
4. Do not use cleaning solvents which leave residue. Do any solutions for cleaning unless which in not recommended by the sealant manufacturer.
5. Follow manufacturer's directions for specific products and surfaces.
6. Remove the knock-out of the sleeve before inserting the seal.
7. The seal must always be installed in the correct end of the knockout sleeve.
8. Use the flange as template for the drilling of the bolt holes.
9. Attached the frame to the structure using suitable sealing method and suitable stainless fasteners.
10. Weld the ROXTEC seal to the wall according to the ROXTEC welding guidelines.
11. Make all cables go straight, not angled through the seal.
12. Warm up the installation lubricant to soften it when installing in the cold areas.
13. Only One Cable is permitted through each module.

TESTING:

1. Check for Mechanical Damage
2. Check that only one cable passes through each module.
3. Check that there is no center core missing.
4. Check the bolts are tightened similarly.
5. Verify the frame is push all they way to the sleeve.
6. Make sure the cable goes straight through the frame.
7. Verify the correct utilization of the entire packing space.
8. Make sure the front fittings are positioned.
9. Check the compression
10. Check that there no visible gap between cable/pipe and modules.

MEASUREMENT & PAYMENT: Conduit Interior Sealing Fittings shall be payed and installed in accordance with the plans, specifications and directions of the Engineer.

The price bid shall be Each, furnished and installed and shall include the cost of all labor, materials, equipment and incidental expenses necessary to complete the work, including testing, all in accordance with the plans and specifications to the satisfaction of the Engineer.

Item No.	Item	Pay Unit
PK-ESCR-690	CONDUIT INTERIOR SEALING FITTING	EA

END OF SECTION

SECTION PK-ESCR 701 – SAFETY SURFACING

WORK: Under these items, the Contractor shall furnish and install SAFETY SURFACING of various types in accordance with the plans, specifications and directions of the Engineer.

Note: The safety surfacing shall be installed as soon as possible after the play equipment installation is complete. The Contractor shall be responsible for temporarily barricading the Play Equipment prior to completion of the safety surfacing installation.

INTENT: In general, mats shall be utilized according to ASTM F1292 (latest issue) drop height criteria as follows: tot unit play areas shall be surfaced with mats which meet or exceed 5 foot drop height criteria; ten foot high play swing areas shall be surfaced with mats which meet or exceed 10 foot drop height criteria; all other areas shall be surfaced with mats which meet or exceed 8 foot drop height criteria.

MATERIALS: Unless otherwise herein specified, all materials and methods of construction shall conform to the requirements of the NYCDOT Standard Highway Specifications.

Molded Rubber Mats: Safety surfacing shall be a waffle type compression molded rubber mat with an abrasion resistant surfacing and ribs underneath which will provide an air entrained cushion. Each material shall be of a thickness necessary to meet or exceed the standards and testing requirements as stated in this specification. Color shall be as shown on the drawings. All colors (other than red) shall be paid as colored. Color speckles on black background shall be paid as red. Color speckles on color background shall be paid as colored. Marbleized color design shall be paid as colored.

Compression molded synthetic rubber mats shall consist of a minimum one-quarter (1/4") inch thick abrasion resistant top membrane with a cushion-course rib system underneath. Material shall not have more than one-sixteenth (1/16") inch surface distortion and shall be of uniform specified color and appearance.

Safety surfacing must be one of the following products, subject to conformance with all testing criteria:

- “EZ Fall” as manufactured by Mitchell Rubber Products Inc., Mira Loma, CA
- “SpectraLock” as manufactured by Play Safe Surfaces LTD, Syosset, NY
- “M2” as manufactured by Mitchell Safety Surface, Pomona, CA
- “SaferZone Tiles” as manufactured by Sutcliffe Play Limited, Upton, West Yorkshire, England
- Or approved equal

Premolded synthetic polyurethane safety surfacing consisting of rubber crumbs bound together with a polyurethane binder and/or poured in place safety surfacing are not acceptable under this specification.

Adhesives: Any variation from pre-approved adhesives must be submitted as per “Submittals”. The following adhesives have been pre-approved for specific applications:

“Epoxygrout” 2 Part Epoxy as manufactured by U.S. Epoxy, Patchogue, NY, or approved equal, for plastic or rubber anchor to asphalt applications.

Lord® Cyanoacrylate Adhesive as manufactured by Lord Chemical Products Corp., Cary, NC, or approved equal, for rubber to rubber applications. Cyanoacrylate adhesive is commonly known as “Superglue”, or “Crazy Glue”.

STANDARDS: All safety surface material shall meet the latest suggested guidelines published in the "Handbook for Public Playground Safety" by The U.S. Consumer Product Safety Commission (C.P.S.C.), and The American Society for Testing and Materials (ASTM) as outlined below.

TESTS: Safety surfacing must meet the following test requirements and criteria:

1. Critical Fall Height Laboratory test - When tested in accordance with ASTM F1292 (latest issue) Test Method F355, Procedure C (Metal Headform), the surface shall not impart to the headform upon impact, a peak deceleration exceeding 200 times the acceleration due to gravity (200G's) and shall not exceed 1000 Head Injury Criteria (HIC). Test submittals must clearly state that test was performed in a laboratory, over the seam and anchoring system, and on the body of the tile. The drop height(s) used in this test shall be the height(s) as noted on the contract drawings.

2. Weathering (Aging) - After being subject to fifty (50) freeze-thaw cycles in accordance with ASTM C67, “Freezing and Thawing”, and after being subject to 200°F for 7 days in accordance with ASTM D573, "Rubber Deterioration in an Air Oven", the same sample shall be re-tested in compliance with ASTM F1292 at 72°F only. A peak deceleration reading not exceeding 200G's shall be maintained. HIC testing is not required for re-testing.

3. Slip Resistance - When using the "British Portable Skid Resistance Tester" in accordance with ASTM E303, the wet-dynamic reading shall not be less than 40.

4. Flammability - When tested in accordance with ASTM E648, "Standard Test Method for Critical Radiant Flux of Floor Covering Systems Using a Radiant Heat Energy Source", the material shall have a minimum critical radiant flux of 0.22 Watts/cm2

INSTALLATION: Installation of all types shall be in accordance with CPSC guidelines and manufacturers installation instructions approved by the Engineer. The safety surfacing should not create new hazards; hence, all installations shall be done as carefully as possible in a neat and professional manner.

All safety surfacing shall either be recessed with the top flush with surrounding finish grade, or have a beveled perimeter transition piece along its entire open perimeter to allow for a smooth, easy transition between the surrounding finish grade and the level of the safety surfacing. Safety surfacing in swing areas shall be installed with full thickness to the fence or curb except in the entryway, which shall have a beveled edge.

Molded rubber mat installation must be by mechanical means of each individual tile. Adhesives to hold small, cut pieces of mat to pavement surface are unacceptable. Adhesives are only to be used with anchoring devices, transition piece, or caps as described in “Adhesives”. Shop drawing shall clearly show that every piece is connected by mechanical means. The installation shall be vandal resistant and be firmly secured so that it cannot be pulled up from the playground surface.

Mats shall have either: a) all center tiles secured individually to the playground surface with vandal-resistant anchors, or b) mechanically locked together to prevent separation or removal of blocks from play area. The perimeter transition pieces shall be secured to the pavement with vandal-resistant anchors or approved adhesives.

Any anchoring system used shall not create "hard" spots within the surfacing which fails to meet test requirement No. 1 and ASTM F1292. All plugs shall be installed flush with or slightly recessed (1/8" maximum) below the rest of the surfacing; plugs shall not protrude above the surrounding surfacing. All mats shall be installed so that they will be hand tight in hot weather. Necessary adjustments shall be made for installation in cool weather.

SPECIAL CONDITIONS: Where surfacing may cover a drain opening, the surfacing shall be drilled or slotted in a pattern matching the basin openings to allow for drainage. Where surfacing covers a basin or manhole, the Contractor shall drill six (6) one-quarter (1/4") inch holes at an angle of 45o providing a vent for the basin or manhole. Surfacing shall be formed around tree pits and not cover granite block, provided that such elements are outside the fall zone.

ADDITIONAL TESTING: The City reserves the right to make any additional tests it feels necessary, and the Contractor shall furnish material when needed for testing.

SUBMITTALS: All submittals shall be submitted prior to manufacture and in accordance with the requirements of the S-Pages.

Material: For approval and prior to installation, the Contractor shall submit two samples of each drop height specified of the safety surface material no larger than one foot by one foot (1' x 1') in size representing color, composition and thickness proposed to be used, the drop height used, and the supporting certified test data showing that the material meets or exceeds the test requirements of this specification. Per ASTM F1292 paragraph 4.3.4, the laboratory test used to determine critical fall height of materials shall have been conducted no more than five years prior to the date of installation of the playground surface. In addition, all anchoring / attachment components and product literature for necessary adhesives which vary from preapproved adhesives shall be submitted for approval.

Shop Drawings: A Shop drawing of the proposed safety surfacing layout shall be drawn in 1/4" = 1'-0" scale (unless otherwise specified by the project manager) and shall clearly show the following details: actual size of mats or modular tiles; size of transition pieces; size of cut pieces, if any; location of all mechanical anchors, rods, or clips; type of adhesive to be used; and exact location of all play equipment, posts, springs or other support systems. As-built deviations from the proposed safety surfacing layout made during installation shall be approved in the field by the Engineer in writing on the shop drawing.

Installer Certification. Installer must be trained and certified by the manufacturer. Installer's certification on manufacturer's letterhead shall be submitted to the Engineer.

Insurance Certificate: The Contractor shall furnish a Manufacturer's Certificate of Product Liability Insurance for a minimum of one (1) million dollars naming "The City of New York" as Additional Insured. Insurance shall be for eighteen months, starting at Substantial Completion.

Warranty Against Shrinkage: The Contractor shall furnish a standard one year manufacturer's warranty, enhanced as follows: For eighteen months, starting from the date of Substantial Completion, the Manufacturer agrees to reinstall or replace material which shrinks, creating a gap between mats of more than one-half (½") inch. Measurement shall be performed at ambient temperature of 72 °F + 5 °F.

Manufacturer's Recommended Installation Instructions and Maintenance and Repair Instructions. Installation, maintenance and repair of all types of safety surfacing, including adhesives, graffiti

removal, etc. shall be per manufacturer's instructions. Instructions shall be submitted and subject to approval by the Engineer.

MEASUREMENT AND PAYMENT: The quantity of **SAFETY SURFACING** of various types to be paid for under this item shall be the number of **SQUARE FEET** furnished and installed in accordance with the plans, specifications, and directions of the Engineer. No deduction shall be made for cut surfacing removed for cross section of posts.

The price bid shall be the unit price per **SQUARE FOOT** of each type and shall include the cost of all labor, materials and incidentals necessary to complete the work, in accordance with the plans and specifications to the satisfaction of the Engineer.

Upon submission and approval of the required shop drawings, the Contractor shall receive two (2%) percent of the total bid price. Partial payment for stored materials may be granted in accordance with the NYCDOT Standard Highway Specifications, **Section 1.06.35**.

Item No.	Item	Pay Uni
PK-ESCR 745 A	**SAFETY SURFACE 5' FALL HEIGHT, BLACK**	**S.F.**
PK-ESCR 745 B	**SAFETY SURFACE 5' FALL HEIGHT, RED**	**S.F.**
PK-ESCR 745 C	**SAFETY SURFACE 5' FALL HEIGHT, OTHER COLOR**	**S.F**
PK-ESCR 701 A	**SAFETY SURFACE 8' FALL HEIGHT, BLACK**	**S.F.**
PK-ESCR 701 B	**SAFETY SURFACE 8' FALL HEIGHT, RED**	**S.F.**
PK-ESCR 701 C	**SAFETY SURFACE 8' FALL HEIGHT, OTHER COLOR**	**S.F.**
PK-ESCR 093 A	**SAFETY SURFACE 10' FALL HEIGHT, BLACK**	**S.F.**
PK-ESCR 093 B	**SAFETY SURFACE 10' FALL HEIGHT, RED**	**S.F.**
PK-ESCR 093 C	**SAFETY SURFACE 10' FALL HEIGHT, OTHERCOLOR**	**S.F.**

END OF SECTION

SECTION PK-ESCR 703 – ADULT FITNESS EQUIPMENT

WORK: Under this item, the Contractor shall furnish and install all **ADULT FITNESS EQUIPMENT** in accordance with the plans, specifications and directions of the Engineer. In addition, the Contractor shall furnish incidental materials to the Engineer, as specified under the heading INCIDENTAL MATERIALS.

MATERIALS: Unless otherwise specified herein, all materials shall conform to applicable portions of the NYCDOT Standard Highway Specifications.

The Adult Fitness Equipment shall be as shown on the contract drawings and shall be various pieces, either moving or stationary types, as manufactured by Landscape Structures Inc., Delano, MN, Gametime Inc., Ft. Payne, AL, Kompan Inc., Pflugerville, TX, or approved equal. All Adult Fitness Equipment shall meet ASTM F3101 – Latest Revision "Standard Specification for Unsupervised Public Outdoor Fitness Equipment" and the Consumer Product Safety Improvement Act (CPSIA) of 2008.

Footings: Footings shall be Concrete as described in Section ESCR-4.06 as per the dimensions shown on the contract plans.

Steel Members:

Posts: Posts, railings and vertical members shall be Structural Steel tubing as specified below. Tubing for posts shall have a minimum thickness of 0.120".

Rails and Fixtures: Railings and fixtures shall be structural tubing of such thickness that the railings shall not sag or bend during use. Any tubing that bends, sags or does not meet ASTM F3101-Latest revision, shall be replaced and upgraded by the manufacturer at no additional cost to the City.

Tubular Steel: Tubular steel shall be structural tubing of the sizes and shapes shown in the approved shop drawings. Steel shall meet the specifications for ASTM A500, Grade B which has a minimum tensile strength of 58,000 psi (for round and shaped) and a minimum yield point of 42,000 psi for round structural tubing and a minimum yield point of 46,000 psi for shaped structural tubing. Material shall be load-tested under ASTM F3101-Latest Rev., after fabrication.

Caps: All exposed ends of steel members shall be plugged with metal or injection molded polyamide – nylon caps. Metal caps shall be riveted in place with spot welding or self-sealing rivets. Polyamide – nylon caps shall be set onto posts and secured with steel fasteners. Steel fasteners shall be in accordance with this specification.

Instructional Signage: Instructional signage shall be constructed of 11 gauge aluminum, 6 mm thick polycarbonate sheets, or other approved material. Instructional signage shall be installed on each station or unit and shall show, at a minimum, proper exercise technique, correct body position and the muscle groups targeted and shall be as shown on the approved shop drawings.

Seats, Benches, Arm Pads, Foot Pads, Pedals and Handgrips: Seats, benches, arm pads, foot pads, pedals and handgrips shall be rotationally molded from color-compounded, first quality, linear lowdensity or high-density polyethylene or manufactured from flexible polyvinylchloride (PVC) vinyl compounds. Dry blended or molded-in resins are not acceptable for polyethylene. Polyethylene shall be ultraviolet stabilized to UV-8 and have anti-static additives. Seats, bench coverings, and arm pads may also be manufactured from nylon polyamide or polyurethane

materials. All plastic materials shall have a minimum tensile strength of 2,500 psi per ASTM D638. Wall thickness shall vary by component and as shown on the approved shop drawings. Color shall be as shown on the contract plans.

Fittings and Clamps: All fittings and clamps shall be as indicated on the approved shop drawings and as may be required to complete the installation. All fittings shall be of the best quality malleable iron, drop-forged steel or steel plate as indicated. Clamp fittings shall be cast aluminum or 12 gauge drawn quality or better steel and finished to match vertical components and shall be smoothly constructed with no projections or sharp edges. All clamps shall have tamper resistant fasteners. Clamps used on components subjected to vertical loads shall be pinned to prevent slipping and twisting.

Fasteners: All fasteners including, but not limited to, bolts, lag screws, tie rods, threaded rods, nuts and washers, shall be of the sizes indicated on the approved shop drawings. Fasteners shall be either stainless steel per ASTM F879 or carbon steel treated with a corrosion resistant coating per applicable ASTM plating specifications. All threaded fasteners shall include a locking patch type material that will meet the minimum torque requirements of Industrial Fastener's Institute (IFI)-125 "Test Procedure for the Locking Ability Performance of Chemical Coated Lock Screws". The fitness equipment manufacturer shall provide special tools for pinned tamperproof fasteners. All protruding bolts, screws, and other threaded connectors shall be cut off to within two threads of nut, washer, etc., then satisfactorily peened to prevent removal by unscrewing, and filed completely smooth to remove all sharp edges.

Resistance Mechanism: Resistance mechanisms, where installed, such as pistons, rubberized components, gearboxes or other such components designed to incorporate resistance-training shall be fully enclosed. Exposed resistance mechanisms on fitness equipment will be rejected.

Post Coverings: If required by the manufacturer, post coverings for fitness equipment posts shall be UV stabilized, wear resistant, maintenance free EPDM rubber. Post coverings dimensions including thickness shall be as shown on the approved shop drawings.

STEEL FABRICATION: All steel components to be welded shall be welded in complete accordance with the standards of the American Welding Society. All welds shall be continuous around the entire perimeter. All welds shall be ground smooth. NO TACK WELDING AND NO FIELD WELDING SHALL BE PERMITTED.

All steel components shall be either powder coated or hot-dipped galvanized and shall meet the following requirements:

Corrosion Resistant Treatment: All fabrication and welding shall be completed prior to application of the corrosion resistant coating, metal pieces shall be cleaned of all weld spatter, mill scale, varnish, rust, grease, and the like and the surface mechanically or chemically prepared to receive the coating.

Galvanizing: Hot dipped galvanization of steel shall be in accordance with ASTM A123/A123M – Latest Revision - “Standard Specification for Zinc (Hot-Dip Galvanized) Coatings on Iron and Steel Products”.

Polyester Powder Coating: Prior to powdercoating a corrosion resistant coating of thermal spray zinc coating or electrostatic applied primer shall be applied with a minimum thickness of 3 mils. All metal pieces, including welds, shall receive the coating. A surface coat shall be applied to the

thermal zinc or iron phosphate coated metal pieces in such a manner that the coating will not peel off. The manufacturer shall perform all processes required to achieve a smooth material bond. The surface coat shall be an electrostatically sprayed, lead-free, TGIC (triglycidyl isocynanurate) polyester powder coating applied to a minimum of 5 mil thickness which shall be oven cured at temperatures between 400 and 450 degrees Fahrenheit for a period of 20 minutes. The TGIC polyester powder coating shall be similar to Secural by Spraylat, Tiger Drylac Series 49 as manufactured by Tiger Drylac U.S.A., Reading, PA, Clear Polyester TGIC ENVIROCRON Powder Coat, as manufactured by PPG Industries, College Station, TX, or approved equal and shall comply with ASTM standards as follows:

PHYSICAL PROPERTIES	TEST METHODS	ACCEPTANCE CRITERIA
Adhesion cross hatching	D3359B	5B (0% area removed)
Flexibility conical mandrel	D522	Pass 3/8” mandrel
Pencil hardness	D3363	Pencil hardness 2H minimum
Impact resistance	D2794	80 inch pounds minimum
Overbake resistance- Adhesion	D2454	5B
Overbake resistance- Hardness	D2454	Pencil hardness 2H minimum
Overbake resistance- Direct Impact	D2454	140 inch pounds minimum
Humidity resistance-250 hours	D4585	No visible change to surface
Weatherability	D822	No visible change to surface
Salt Spray Resistance	B117	1000 hours
Corrosion Resistance	D1654	Rating 6 or greater
UV Exposure	G154, 340 bulb	2000 hours rating delta E of 2
		90 percent gloss reduction

Colors of powder coating shall be as shown on the contract plans. (Submittals required, see Submittals). Material manufacturer's directions for storage and use shall be adhered to. Material surfaces shall be protected during shipment so as to arrive mar and scratch free in the field.

INSTALLATION: Asphalt pavement shall be neatly saw-cut prior to excavation for footings. All tubular steel posts shall be set square and plumb in concrete footings as shown on the approved shop drawings to grade required, assuring level installation. Footings shall have the top surface finished so as to provide sheet drainage away from steel uprights, level and free from surface fluctuations that could contribute to an uneven surface in overlaying safety surfacing.

Equipment shall be assembled to configuration as shown on the approved shop drawings. All fastenings shall be made as shown on the drawings and shall be securely tightened with an impact and/or torque wrench (as per manufacturer’s specification). The Contractor shall take precautions while trimming bolt projections to prevent metallic contamination (rust bloom) of the corrosion resistant bolts to the satisfaction of the Engineer. These precautions include the use of previously unused grinding wheels, and applying zinc rich paint on trimmed galvanized bolts. All work shall be done so that no hazardous projections or rust bloom shall be left in the finished work. All work shall be done by skilled mechanics in a professional manner.

FIELD INSPECTION: An authorized manufacturer's representative, who is not the qualified installer, shall inspect and approve the installation of the fitness equipment prior to acceptance by the Engineer. The authorized manufacturer's representative shall certify that the fitness equipment was correctly installed in accordance with the manufacturer's written instructions, that all fastenings are securely installed meeting the manufacturer's maximum torque value, and meeting all requirements set for in ASTM F3101 – Latest Revision. A Document of Acceptance shall be provided by the authorized manufacturer's representative stating that a field inspection was conducted and the installation is accepted by the authorized manufacturer's representative (See Submittals).

MATERIALS: The Contractor shall furnish (furnish only, not install) and deliver, to the Engineer, incidental materials obtained from the approved adult fitness equipment manufacturer. Contractor shall also furnish to Engineer any catalogs, invoices, statements, etc. for verification that a complete set of all maintenance and operations manuals, tools, etc. have been furnished. All furnished material shall be properly identified with the name of park and contract number. Incidental materials shall be the following:

1 (One) - Tools And Hardware Maintenance Repair Kit, complete with tool box, special tools for tamper proof fasteners, fastener wrench and hardware (nuts, bolts screws etc.), to be provided by manufacturer. The repair Kit shall be clearly marked with the Contract Number and the Park name. Marking shall be done with permanent magic marker or other method approved by the Engineer.

SUBMITTALS: All submittals shall be in accordance with the requirements of the S-Pages. The Contractor shall submit the following for review and approval prior to manufacture:

Shop Drawings: The Contractor shall submit shop drawings indicating as a minimum: the fitness equipment layout, elevations, footings layouts and dimensions, training envelope and clearance, fall height, materials, finishes, supports, hardware, fittings, moving and resistance components, post coverings, torque schedule, accessories, custom components and compliance with ADA requirements including access details. Where safety surfacing is required, the shop drawings shall show the distance in linear feet from outside edge of the safety surfacing to a minimum of three (3) closest adjacent fixed outside structures such as curbs, fences, benches or trees.

Deviations From Layout: Any deviations from the contract drawings must be submitted for review and approval by the Engineer.

Color Samples: Color samples shall be submitted for approval before any powder coating is done.

Document of Acceptance: An authorized representative of the fitness equipment manufacturer must inspect and approve the completed installation. The adult fitness equipment will not be accepted by the manufacturer or the Engineer until they are satisfied with the installation. No additional compensation will be given for any necessary corrective work. A document of acceptance signed by the authorized Manufacturers' representative must be submitted to the Engineer before the final 20% payment is made to the Contractor for this item.

Guarantee: The manufacturer shall guarantee replacement of any items or components found to be defective during the manufacturers' guarantee period. The engineer shall submit the original guarantee certificate to the Capital Liaison in the Maintenance Division at the completion of the project. The Contractor shall furnish the original and 4 (four) copies of the manufacturers' guarantee.

One (1) - Installation and Maintenance Manual, complete, as provided by manufacturer.

MEASUREMENT AND PAYMENT: For furnishing and installing all **ADULT FITNESS EQUIPMENT** in accordance with the approved shop drawings, specifications and directions of the Engineer, the Contractor shall receive the **LUMP SUM** price bid.

The price bid shall be a **LUMP SUM** for all **ADULT FITNESS EQUIPMENTand ADULT FITNESS EQUIPMENT, CHALLENGE COURSE** and shall include the cost of all labor, materials, equipment and incidentals necessary to complete the work, including unclassified and/or Hand/Pneumatic excavation, concrete footings, instructional signage, saw-cutting and all submittals in accordance with the contract plans, approved shop drawings and specifications, to the satisfaction of the Engineer.

In addition, the Contractor must deliver INCIDENTAL MATERIALS as outlined above to the Engineer. No additional payment shall be made for incidental materials. Contractor shall include cost in the bid price.

Safety surfacing, if required, shall be paid for under its own contract item.

Item No.	Item	Pay Unit
PK-ESCR 703 A	ADULT FITNESS EQUIPMENT	L.S.
PK-ESCR 703 B	ADULT FITNESS EQUIPMENT, CHALLENGE COURSE	L.S.

END OF SECTION

SECTION PK-ESCR 705 – SWINGS 7, 8, 10 FOOT HIGH

WORK: Under these Items, the Contractor shall furnish and install **SWINGS 7'-0" or 8'-0" HIGH**, and **PLAY SWINGS-10'-0" HIGH** and, in accordance with the plans and specifications where shown on the plans, or as directed by the Engineer.

Each play swing unit 10'-0" High consists of a swing frame and two (2) flat seats. Each eight foot (8'-0") High and seven (7'-0") foot high swing unit consist of a swing frame and two (2) swing seats. The seat combinations shall be two (2) tot bucket seats, two (2) strap seats, or one (1) inclusive seat and one (1) tot bucket seat.

STANDARDS: All swings shall meet or exceed the latest requirements as published in the Handbook for Public Playground Safety - Volumes I and II by the National Bureau of Standards for the U.S. Consumer Product Safety Commission and the ASTM F-1487-latest rev. "Standard Consumer Safety Performance Specification for Playground Equipment for Public Use". Swing design and construction shall also comply with the Guide to ADA Accessibility Guidelines for Play Areas, Final Rule. See Parks Standard Details: Play Swing 10'-0" High, Swing 8'-0" High, Swing 7'-0" High.

MATERIALS: Unless otherwise herein specified, all materials and methods of construction shall conform to the requirements of the NYCDOT Standard Highway Specifications. Swings shall be as manufactured by All City Play Equipment Inc., Metuchen, NJ; Shannon Gates and Railings, Deer Park NY; or approved equal.

Concrete Footings: Shall be 3,200-psi minimum compressive strength class B-32 per the NYCDOT Standard Highway Specifications, Section ESCR-4.06.

Powder Coated Pipe and Fittings: Pipe shall be Schedule 40, steel pipe conforming to the requirements of ASTM A-53 and shall be of the same sizes and dimensions indicated on the plans. Pipe shall be hot dipped galvanized in accordance with ASTM F1083 and powder coated with TGIC-Polyester. Galvanizing of pipes and fittings shall provide an acceptable substrate so that applied powder coatings will not peel off. Ensure surfaces to be coated are clean and dry and free of grease, dust, rust, etc. No lacquer, urethane or other coatings which would prevent proper adhesion of powder coating shall be applied to the pipe or fittings. All coated parts shall first receive phosphating and chromatizing treatments to improve the adhesion of the surface coating.

The TGIC-Polyester shall be applied to pipe and fittings at a film thickness of 3 to 6 mils by electrostatic spray process and bake finished per manufacturer's directions. The TGIC-Polyester shall be applied without voids, tears or cuts that reveal the substrate and shall thoroughly adhere to the metal without peeling when scratched with a pick device or knife blade point. Color to be black unless otherwise indicated on the plans.

Laboratory Test For TGIC-Polyester Powder Coat: At the discretion of the Engineer, a sample TGIC-Polyester powder coated pipe and/or fitting shall be laboratory tested for bonding of the powder coating to the surface. Test shall be the CrossHatch test per ASTM D3359, method B. Failure to satisfactorily pass this test shall be a basis for rejection.

Fittings, Swing Clamps and Hangers: Shall be of cast ductile iron as shown on the standard details, and shall be galvanized by the hot-dip process after fabrication. Ductile iron tensile strength shall meet a minimum of 65,000 psi, in accordance with ASTM specification A536-84

Class 65-45-12. Galvanizing shall withstand a minimum of five (5) one-minute dips by the Preece Test. Fittings and swing clamps shall be powder coated to match frame.

Bronze Bushings: Shall be frictionless oil-bearing bronze oilite flange bushing, l/2" bore, as manufactured by Isostatic Industries, Chicago, IL, Catalogue No. FB812-4, or approved equal.

Swing Clamps and Hangers: Shall be ductile iron, as manufactured by All City Play Equipment, Metuchen, NJ, Shannon Gates and Railings, Deer Park, NY or approved equal.

Fastenings: All pipe rails and standards shall be let into fittings from four and a half (4 ½") to five inches (5") as shown on the plans by step head on inside of fitting, and shall be pinned through with steel pins of sizes shown on the plans with ends countersunk riveted. Holes in fittings shall be drilled and countersunk in the shop before galvanizing. Pins shall be galvanized or stainless steel. Holes in the steel pin supports shall be drilled to the exact size as shown on the plans. No hole burning of steel will be permitted. All fastenings shall be coated with high locking adhesive, provided by the manufacturer, immediately prior to tightening. The locking adhesive shall be Loctite® 271 manufactured by Henkel Corporation, Westlake, OH, or approved equal.

The horizontal pipe for each swing shall be in one piece extending through center fitting, and for kindergarten swings shall be long enough to extend through end fittings and shall be provided with cast frive pattern end plugs as shown on the plans.

All rivets and bolts shall be galvanized by the hot-dip process as specified above for fittings. Bolts and nuts shall be galvanized after threading.

Chain Shackle: Shackle shall be a three-eighths (3/8") inch dia. D- shackle, fabricated from type 316 forged stainless steel. The shackle shall have a minimum working load limit of 1,200 pounds. Pin for shackle shall be a flush non-snag screw pin with a tamper resistant, hex drive, flat head shoulder bolt. Shackle shall be as manufactured by Suncor, Pembroke, MA, Item No. S0115NS10; or approved equal. The pin shall be installed with shim washers and tightened with an Allen wrench. The shim washers shall be installed on both sides of the chain's end link to center link on pin. The Contractor shall coat the threads with a high locking adhesive immediately prior to closing of the shackle. The locking adhesive shall be Loctite® 271 manufactured by Henkel Corporation, Westlake, OH, or approved equal.

Chain: Chain for all types of swings shall be one-quarter inch (1/4") carbon steel chain, hot galvanized after fabrication, exception is accessible seat. Chain shall be made of welded links, proof tested for a working load limit of 2,600 pounds in accordance with ASTM Designation A413, Class Grade 43-High-test chain. Chain shall be Campbell, System 4, High Test Chain grade 40 as manufactured by Campbell Corp., York, PA, or approved equal. At specific intervals, links shall be embossed with a "C4" quality grade mark, or equal marking.

S-Hook: S-Hook for all applications shown on the drawing shall be three-eighths inch (3/8") wire size carbon steel, hot galvanized after fabrication. S-Hook shall be Campbell No. 120 catalogue 610-1234, as manufactured by Campbell Corp., York, PA, or approved equal. S-Hook shall be closed to 1 mm (.04 inches) or less as shown on the standard detail.

Full Bucket Tot Seats: Shall be molded, U.V. resistant, full-bucket rubber tot seats encapsulating a reinforcing metal plate. Seat shall be Model No. S100 as manufactured by Jensen Swing Products, Inc., Santee, CA, or approved equal. The yokes for Bucket tot Swing Seats shall be furnished by the seat manufacturer. Seat shall have a rubber sticker that advises users of the

maximum weight limitation of the seat firmly attached to the front and rear of the seat. Color of seat to be black, warning label shall have white letters with a black background.

A NOTE REGARDING BUCKET SEATS: Although the drawings show the full bucket rubber tot seat for 8' High Swing described herein, the intent of this item is to install the "dog resistant" type of this seat (described below) where a "dog problem" has been identified at the site. The existence or non-existence of a "dog problem" shall be determined by the Engineer, in consultation with NYCDPR M&O.

Dog Resistant Bucket Tot Swing Seat: Dog Resistant Bucket tot Swing Seat shall be S175NYC Rotational Molded Infant Seat as manufactured by Jensen Swing Products, Santee, CA, or NYCS75 as manufactured by Superior International Industries, Carrollton, GA, or approved equal. The Dog Resistant Bucket Swing Seat shall be seat shall be rotationally molded with linear low-density polyethylene in fade resistant black. Each swing seat shall include (2) two stainless steel integral yokes and associated hardware. The Dog Resistant Bucket tot Swing Seat yokes shall be bolted to the seat with a maximum of two threads projecting below the eyebolt nuts.

Strap Seat for 8' High Frame: Shall be approximately twenty-four (24") inches long by six inches (6") wide by five-sixteenths (5/16") inch thick with stainless steel hangers. Seat shall be a U.V. resistant, EPDM, strap rubber seat reinforced with Kevlar insert, or approved equal. Strap seats with steel insert will not be accepted as an equal. The swing seat shall be capable of supporting a center load of at least eight hundred- (800) lbs. without showing a permanent deflection and no visible fracture or cracking. Strap seat shall be Kevlar Insert Strap Seat No. S 140, as manufactured by Jensen Swing Products, Santee, CA, or approved equal. Color to be black.

Note: Installing strap and bucket seats in the same unit (bay) is prohibited.

Inclusive Seat with Chain: Shall be Zero-G Chair #8554 for ages 2 to 5 years as manufactured by Gametime, Ft. Payne, AL, or Molded Bucket Seat (2-5), with Harness (Model No. 218671) manufactured by Landscape Structures, Delano, MN, approved equal. The accessible seat shall be rotationally molded with linear low-density polyethylene conforming to the specifications herein. The accessible seat shall incorporate a "Roller Coaster" style Brace and Latch to secure the user in place. The Brace and Latch shall be rotationally molded with linear low-density polyethylene conforming to the specifications herein. The accessible seat shall include a stainless steel chain, fabricated from standard 7/32" diameter stainless steel wire chain appropriate to hang from a seven or eight foot high swing frame.

Steel Yoke for Flat Seats: Steel Yoke for Flat Play Swing Seats shall be one-half inch (½") diameter. Yoke shall be cold drawn, hot-dipped galvanized steel formed to dimensions as shown on DPR Standard Details for Swings. Yokes are available for purchase from All City Play Equipment, Metuchen, NJ, or approved equal. Yoke for play swing seat shall be securely fastened to seat with vandal resistant heavy weight zinc plated elastic locknuts; yoke for full-bucket or strap seat shall be integrally fastened at each end of seat with a bracket and three steel rivets.

Flat Play Swing Seats: Shall be approximately twenty inches (20") long by nine and one-half inches (9 ½") wide. Seats shall be molded, shock absorbing, U. V. resistant, flat rubber seats reinforced with an aluminum plate. The swing seat shall be capable of supporting a center load of at least one thousand (1,000) lbs. without showing a permanent deflection and no visible fracture or cracking. Play swing seat shall be one of the following:

Model No. SRE 185 as manufactured by Sutcliffe Play Ltd., Yorkshire, England or

Model No. 289-80797, Flat Swing Seat as manufactured by Landscape Structures, Inc., Delano, MN, or approved equal. Color of seat to be black.

Holes in Play Swing seats must accept std. One-half (½") inch dia. metal yokes.

INSTALLATION: The swing supports shall be erected on concrete for park structures footings prepared to receive them as shown on the plans and Parks Standard Details. Concrete footing shall be finished so that the surface is plane and level and safety surfacing will not buckle.

TOUCH-UP & REPAIR: For minor damaged caused by installation or transportation, clean damaged area, then;

1. On damaged galvanized surfaces, apply organic zinc repair paint complying with ASTM A780, then repair powder coating per number 2 below. Galvanizing repair paint shall have 65 percent zinc by weight. Thickness of repair paint shall be not less than that required by ASTM A123.
2. On damaged powder coated surfaces, touch-up finish in conformance with manufacturer's recommendations. Provide touch-up such that repair is not visible from a distance of 6 (six) feet.

Dog Resistant Bucket Tot Swing Seat: The Dog Resistant Bucket Tot Swing Seat yokes shall be bolted to the seat with a maximum of two threads projecting below the eyebolt nuts.

SUBMITTALS: All submittals shall be submitted prior to manufacture and in accordance with the requirements of the S-Pages.

SHOP DRAWINGS: Where required, the Contractor shall submit shop drawings for approval in accordance with the S-Pages.

FOUNDRY CERTIFICATES: A foundry certificate verifying authenticity of the cast ductile iron supplied on this Contract shall be submitted. Certificate shall be on foundry letterhead, dated and signed by an officer of the company with Contract name and #, Contractor Name & Class of Ductile provided. A metallurgical analysis certifying that the material is cast iron performed by an independent, accredited, laboratory may be accepted in lieu of the Foundry Certificate.

PROOF TEST CERTIFICATE: Manufacturers Certificates: Certificates are required for the shackle assembly and the chain to substantiate evidence of working load limit. Where a metallurgical analysis is submitted in lieu of the Foundry Certificate, the Contractor shall also submit the working load limit certificate from an independent, accredited laboratory for the swing clamps. Submit to the Engineer.

MEASUREMENT AND PAYMENT: For **EACH** Swing 7'-0" or 8'-0" high consisting of a frame and two swing seats, furnished and installed in accordance with the plans and specifications and directions of the Engineer, the Contractor shall receive the unit price bid.

For **EACH** Play Swing 10'-0' high, consisting of a frame and two swing seats, furnished and installed complete in accordance with the plans and specifications and directions of the Engineer, the Contractor shall receive the unit price bid.

The prices bid shall be a unit price for **EACH** 7'-0" or 8'-0" or 10'-0" high Swing unit and shall include the cost of all labor, materials, unclassified excavation, concrete footings, Seats (flat, strap, full bucket, or inclusive seat) including yokes, equipment, powder coating, locking adhesive for all fastenings, and incidental expenses necessary to furnish and install swings in accordance with the plans, and specifications to the satisfaction of the Engineer.

Hand and/or Pneumatic Excavation or Rock Excavation, if required, shall be paid for separately under their respective contract items.

Item No.	Item	Pay Unit
PK-ESCR 100	**SWING – 7’-0” WITH INCLUSIVE SEAT AND TOT BUCKET SEAT TYPE 2**	**L.S.**
PK-ESCR 705	**SWING – 7’-0” WITH INCLUSIVE SEAT AND TOT BUCKET SEAT TYPE 1**	**L.S.**
PK-ESCR 706	**PLAY SWING – 10’-0” HIGH WITH FLAT SEAT**	**L.S.**

END OF SECTION

SECTION PK-ESCR 711 – CHAIN LINK FENCE

WORK: Under these Items, the Contractor shall furnish and erect powder coated chain link fences and powder coated chain link fence gates of the heights and sizes shown on the drawings, in accordance with the plans and specifications and directions of the Engineer.

INTENT: It is the intent of these items to effectively enclose the areas shown on the plans, and when new fences terminate at existing or new structures or fences within the areas or adjacent to the areas, the clear spaces between the fences and structures shall not exceed three and one half (3 1/2") inches. Closures, if necessary, shall be made by the Contractor in a manner approved by the Engineer. Payment for such closures will be made per linear foot or a fraction thereof, at the unit prices bid for the fences.

MATERIAL: All fittings, hardware and equipment shall be designed to carry one hundred percent (100%) overload.

Malleable iron castings shall be powder coated after hot dipped galvanizing in accordance with ASTM Serial Designation: A153.

Pressed steel fittings and appurtenances shall be powder coated after hot dipped galvanizing in accordance with ASTM Serial Designation: A123.

All fittings, hardware and equipment shall be powder coated of a color to match the framework and shall be of the materials listed in the following schedule:

FENCE/GATE PART	MATERIAL
Boulevards, Corner (Split) Fittings and End Fittings	Malleable Iron or Pressed Steel-3/16" thick
Post Caps and Post Line Tops	Malleable Iron or Pressed Steel - 3/16" thick
Couplings	Galv. Steel Pipe - 1/8" thick with 1/4" Dia. Full Depth Rivet
Gate Hinges	Malleable Iron or Pressed Steel-1/4" thick with 1" Dia. Stainless Steel Pin Welded to 1/2" thick Pin Support
Bolts and Nuts	Galv. Steel or Stainless Steel as indicated on Plans
Tension Bars	1/4" x 3/4" Galv. Steel for 2" and 1-3/4" Mesh, 3/16" x 3/8" Galv. Flat Steel for 1" Mesh
Tension Bands	1/8" x 1" Pressed Steel
Truss Rods	1/2" Dia. Galv. Steel
Truss Tightener	3/8" x 1" Galv. Steel
Truss Clamp	1/4" Pressed Steel
Locking Device	Powdercoated steel, dimensions as shown on the Standard Detail.
Gate Stop	7/16" thick malleable iron
Drive Pins and Set Screws	Stainless Steel, 18-8

POSTS AND RAILS: TYPE I - Posts and rails shall be standard weight galvanized steel pipe of the sizes shown on the plans and shall conform to ASTM Serial Designation F-1083 Schedule 40, except for chain link fence posts 20'-0" height, which shall be Schedule 80. Posts and rails shall be hot dip galvanized inside and outside in accordance with ASTM Serial Designation F-1083 or: For fence up to and including ten (10) feet height, posts and rails may be TYPE II, SS-

40 steel tubing as manufactured by Allied Tube and Conduit Corp. of Harvey, Illinois, or approved equal. Tubing must conform to ASTM A1011/A1011M, cold rolled steel pipe and coated with a minimum of 0.9 ounces of zinc per square foot, a minimum of 15 micrograms of zinc chromate per square inch. Steel pipe supplied under this option shall be of the same outside diameter as Schedule 40 pipe and achieve minimum yield strength of 50,000 p.s.i.

SURFACE COATINGS: All posts, rails and fittings shall be powder coated with either polyvinyl chloride (PVC) or TGIC-Polyester (with the exception of the turnbuckles and threaded ends of the truss rods, both of which shall be sprayed with powder coat touch-up after installation).

Galvanizing of all components shall provide an acceptable substrate for applied powder coatings. No lacquer, urethane or other coatings which would prevent proper adhesion of powder coating shall be applied to the pipe. The powder coating shall be applied to the galvanized surfaces in such a manner that the coating will not peel off. Ensure surfaces to be coated are clean and dry and free of grease, dust, rust, etc. All galvanized parts, prior to powdercoating, shall first receive phosphating and chromatizing treatments to improve the adhesion of the surface coating. Color to be black unless otherwise indicated on the plans.

The entire fence installation shall be coated with one of the two following types of powder coating, (with the exception of gates, all of which shall be TGIC-Polyester and fabric which shall always be PVC). All Fence components shall be coated on all surfaces, of a color to match the framework. All coated surfaces shall comply with the adhesion specifications listed in ASTM F1043.

TYPE A - Polyvinyl Chloride Powder Coating: PVC Powder coating shall be applied to the galvanized steel or iron by the fluid bed method to a preheated base which has been cleaned and primed prior to submersion in vinyl, resulting in a firm bond between the PVC and the metal. PVC shall be applied to a film thickness of 10 to 15 mils on framework and fittings, and 7 to 12 mils on fabric without voids, tears or cuts that reveal the substrate and shall thoroughly adhere to the metal without peeling when scratched with a pick device or knife blade point.

TYPE B - TGIC-Polyester Powder Coating: TGIC-Polyester Powder shall be applied to the galvanized steel or iron in such a manner that the coating will not peel off. The TGIC-Polyester shall be applied at a film thickness of 3 to 6 mils by electrostatic spray process and bake finished per manufacturer's directions. The TGIC-Polyester shall be applied without voids, tears or cuts that reveal the substrate and shall thoroughly adhere to the metal without peeling when scratched with a pick device or knife blade point.

TESTS:

Field Test for PVC Powder Coating: As per ASTM F668, three sample sections of the PVC powder coated fence shall be tested for bonding of the powder coat to the metal. Each test will consist of making two cuts parallel to the axis of the pipe or fitting, through the coating, appx. 1/16 inch (1.6 mm) apart, at least 1/2 inch (12.7 mm) long. With a knife peel back a section of the coating between 1/8 inch (3.2 mm) and 1/4 inch (6.4 mm) long to produce a tab. Attempt to remove the 1/16 inch strip of coating by pulling the tab. The fence shall be deemed acceptable if the coating breaks rather than separates from the metal on all three (3) samples.

Laboratory Test for TGIC-Polyester Powder Coat: At the discretion of the Engineer, a sample of the TGIC-Polyester powder coated fence shall be laboratory tested for bonding of the powder coating to the metal. Test shall be the Cross Hatch test per ASTM D3359, Method B. Failure to satisfactorily pass this test shall be a basis for rejection.

TOUCH-UP AND REPAIR: For minor damage caused by installation, transportation, field welding and cutting of metal powder coated surfaces: clean welds, bolted connections, abraded or sawcut areas, then:

1. On welded and cut surfaces, apply organic zinc repair paint complying with ASTM A780, then repair powder coating per number 2 below. Galvanizing repair paint shall have 65 percent zinc by weight. Thickness of repair paint shall be not less than that required by ASTM A123.
2. On damaged powder coated surfaces, touch-up finish in conformance with manufacturer's recommendations. Provide touch-up such that repair is not visible from a distance of six feet (6').

FABRIC: Fabric shall be hot dip galvanized steel wire mesh as per ASTM A641, with a thermally fused polyvinyl chloride powder coating of 7 to 12 mils thick as per ASTM F668 class 2b. Color to match framework. Fabric shall be produced by methods recognized as good commercial practices. Core wire tensile strength shall be 75,000 psi (517 MPa).

Wire used for the manufacture of fabric shall meet the requirements of ASTM F668 and shall be capable of being woven into fabric without the PVC coating cracking or peeling. PVC coating shall be a dense, impervious covering free of voids. Excessive roughness, bubbles, blisters, bruises and flaking will be a basis for rejection. PVC shall be thermally fused. Bonded or extruded and glued surface coating will not be permitted. Fabric shall be stretched to provide a smooth, taut, uniform appearance free from sag.

Field Test: PVC coating on fabric shall be field tested for adherence to the metal as outlined elsewhere in this specification.

Thickness of Fabric: One (1) Inch Mesh: Uncoated wire dimension shall be 0.120 inches in diameter (11 gauge). Zinc coating shall be 0.30 ounces per square foot of wire surface.

One and Three Quarter (1-3/4) Inch and Two (2) Inch Mesh: Uncoated wire dimension shall be 0.148 inches in diameter (9 gauge). Zinc coating shall be .3 ounces per square foot of wire surface.

Selvages: Fabric shall be barbed at the top and knuckled at the bottom on fences over 6'-0" high. Fabric on fences 4'-0" and 6'-0" shall be knuckled top and bottom. Loops of knuckled fabric shall be closed or nearly closed. The wire ends of barbed selvages shall be twisted in a closed helix of 1- matching turns and cut at an acute angle. The length of the ends beyond the twist shall be at least 1/4 inch long. One (1) inch mesh shall be knuckled both top and bottom.

TIES: Tie-wire core thickness shall be 9 gauge (0.148") wrought aluminum alloy 1100-H16 wire with an extruded vinyl coating in accordance with ASTM A641 Class 3. PVC shall be applied to a film thickness of 20 to 22 mils. Ties shall be spaced fifteen (15) inches apart on rails and twelve (12) inches apart on posts. The ends of ties shall be wound in a telegraph twist two and one half turns. Color to match mesh. Contractor shall touch-up PVC coating on ties damaged as result of installation.

GATES: Gates shall be furnished and installed on reinforced concrete slabs where indicated on the plans or directed by the Engineer. All gates shall be galvanized steel and shall be TGIC Polyester powder coated after fabrication per requirements for fence framework outlined elsewhere in this specification. Welded joints shall have a suitable rust preventive coating applied to the welds prior to powder coating. Gate fabric shall match line fabric adjacent to gate opening. Gates shall be installed plumb, level and secure for full opening without interference. The hinges shall be so designed to permit the gate to swing a full 180 degrees.

Gate Locking Device: Gate locking device shall be fabricated in accordance with the Standard Details and shall be the “Strong Arm Latch” for single gates and the “Commercial Double Gate Latch” for double gates, both manufactured by DAC Industries, Grand Rapids, MI or approved equal. Latch shall be bolted and welded to the gate/fence frame in accordance with the standard detail. In addition to the locking mechanism there shall be a steel drop bolt arranged to engage the gate stop. The drop bolt shall have a flange that meets a fixed locking eyelet, welded on the gate, to lock the gate in the open and closed position. All necessary fittings and gate holders to lock gates in both open and closed positions shall be furnished. The gate locking device shall be installed to face the fenced in area, unless otherwise directed by the Engineer. All welds shall be ground smooth to a neat finish and shall conform to the requirements of the NYCDOT Standard Highway Specifications. All field welds shall be touched-up as specified under the heading “Touch-up and Repair.”

Padlock: The Contractor shall furnish one (1) padlock for each single gate and for each leaf of the double gates. The padlocks shall be American No. 5571 as manufactured by American Lock Co. of Crete, Illinois, or approved equal. All padlocks for the same park facility shall be keyed alike, with two (2) inch width by three-quarter (3/4) inch thick brass body, maximum security, five (5) pin tumblers with hardened alloy steel chrome plated shackle no less than three-eighths (3/8) inch diameter and two (2) inch clearance (elongated shackle). The Contractor shall furnish two (2) keys for each padlock.

REINFORCED CONCRETE SLAB: At gates shall be as shown on the standard details and as specified under "Reinforced Concrete Pavement".

Concrete: Concrete shall be 3,200 psi class B-32 per the NYCDOT Standard Highway Specifications Section ESCR-4.06.

ERECTION: The posts shall be set in holes which shall have been formed in the concrete curb as shown on the plans or directed by the Engineer. Voids for posts shall be formed in the concrete by removable waxed sonotubes or galvanized sheet metal sleeves to remain.

Core drilling is not permitted. After the posts have been set in place and properly supported to hold them in line and grade, the resulting space shall be neatly filled with a grout consisting of one (1) part cement and two (2) parts sand or approved equal. All gates and all end, corner and gateposts, regardless of height of fence shall have a 1/2" diameter truss rod and turnbuckle. Rod shall be tied to the mesh every 12 inches on center with tie-wires. Bolts on the turnbuckle shall be tack welded to prevent loosening. The only exception to the above is that truss rods are not required for end, corner and gateposts for fences 4'-0" ht. and under.

Chain link fabric shall be attached to line and corner posts and top, intermediate and bottom rails. Maintain a min. 1" (inch) clearance between finished grade and fence fabric. Posts shall be set plumb and true to line and grade. Any post not set true to line and grade shall be removed and replaced at the Contractor's expense. Bending posts to make them plumb will not be permitted.

The Contractor shall maintain the chain link fences and gates during the life of the contract and shall repair and replace all members that are disturbed, damaged, or destroyed from any cause at no cost to the City.

Bolt and Hardware Installation: Nuts and bolts shall be galvanized but not powder coated. Cans of TGIC-Polyester or PVC touch-up powder coating shall be used to paint the nuts and bolts per manufacturer's recommendations. The ends of all bolts shall be peened after tightening.

Bolts which are installed six feet (6') or less above grade shall not protrude more than 1/4" beyond the nut after tightening. All rough edges resulting from the cutting of bolts to achieve this requirement shall be filed smooth to the satisfaction of the Engineer. All post caps, corner and

end fittings, and gate hinges on all fence elevations are to be secured in place with #14 SS drive screws to the satisfaction of the Engineer.

SUBMITTALS: All submittals shall be in accordance with the requirements of the S-Pages.

Certification: The Contractor shall submit, at the Contractor's own expense, a certification from the supplier for the following:

1. All castings are made from malleable iron.
2. All hot-dipped galvanized items have met the ASTM serial designations as indicated in this specification.
3. All powder coating meets the ASTM serial designations as indicated in these specifications.

Shop Drawings: Before the work in the shop is started, the Contractor shall submit shop drawings for approval. Include plans, elevations, for entire length including all radial panels, sections, details, attachments to existing and stepped conditions, connectors, anchoring and connecting hardware, fence height, post spacing, gate locking device, gate construction, dimensions and unit weights of framework, and lightning protection for all fences. Include schedule for fence uprights and fabrications methods. Indicate all field and shop welds. Detail custom conditions at non-90° angles.

Samples: Prior to erection of the fence the following shall be submitted: Fence framework: One piece of each pipe size, twelve (12") inches long. Fence Fabric: One piece twelve (12") inches square.

Shipping Lists: The shipping list for the materials furnished shall be certified by the manufacturer that the materials used comply with these specifications.

MEASUREMENT AND PAYMENT: The quantity of **CHAIN LINK FENCE** to be paid for shall be the number **of LINEAR FEET** of each height, furnished and erected complete in accordance with the plans, specifications and directions of the Engineer.

The price bid shall be a unit price per **LINEAR FOOT** of **CHAIN LINK FENCE** of each height and shall include the cost of all labor, material, equipment and all incidental expenses necessary to complete the work, including powder coating and powder coating touch-up, required to furnish and erect chain link fence with PVC powder coated steel fabric, all in accordance with the plans and specifications, and as shown on standard Parks drawings here and therein, to the satisfaction of the Engineer.

The quantity of **GATES** for chain link fence with PVC powder coated fabric shall be the number of TGIC-Polyester powder coated gates for chain link fence with PVC powder coated steel fabric (including both leaves of two-leaf gates, gate posts, locking device with drop bolt, gate stop and chain link fence over the gates) furnished and erected complete in accordance with the plans, specifications, and directions of the Engineer.

The price bid for PVC powder coated gates shall be a unit price for **EACH GATE** for the height of fence specified and shall include the cost of all labor, material, equipment and all incidental expenses necessary to complete the work, including gate stop, padlocks, powder coating and powder coating touch-up required to furnish and erect gates with PVC powder coated steel fabric, and incidentals, all in accordance with the plans and specifications, and as shown on standard Parks drawings here and therein to the satisfaction of the Engineer.

The cost of excavation and concrete shall be paid for separately under their respective contract Items. No deductions will be made for openings in fence except where gates occur. The cost for installing portals, as shown on the plans, shall be deemed included in the unit prices bid for these items.

Item No.	Items	Pay Unit
PK-305	CHAIN LINK FENCE 8’-0” HT.	L.F.
PK-306	CHAIN LINK FENCE 10’-0” HT.	L.F.
PK-308	CHAIN LINK FENCE 12’-0” HT.,	L.F.
PK-316	SINGLE GATE FOR CHAIN LINK FENCE 8’ HT. & OVER	EA
PK-319	DOUBLE GATE FOR CHAIN LINK FENCE 8’ HT.	EA
PK-320	DOUBLE GATE FOR CHAIN LINK FENCE 10’ HT. & OVER	EA
PK-ESCR 070	CHAIN LINK FENCE 16’-0” HT,	L.F.
PK-ESCR 071	SINGLE GATE FOR CHAIN LINK FENCE 4’ HT	EA
PK-ESCR 073	DOUBLE GATE FOR CHAIN LINK FENCE 4’ HT	EA
PK-ESCR 164	CHAIN LINK FENCE 12’-0” HT. 1 ¾” MESH (TENNIS)	L.F.
PK-ESCR 165	SINGLE GATE FOR CHAIN LINK FENCE 8’ HT. & OVER, 1 ¾” MESH (TENNIS)	EA
PK-ESCR 166	DOUBLE GATE FOR CHAIN LINK FENCE 10’ HT. & OVER, 1 ¾” MESH (TENNIS)	EA
PK-ESCR 167	CHAIN LINK FENCE 4’-0” HT	L.F.
PK-ESCR 712	CHAIN LINK FENCE 8’-0” HT. 1 ¾” MESH (TENNIS)	L.F.
PK-ESCR 713	CHAIN LINK FENCE 10’-0” HT. 1 ¾” MESH (TENNIS)	L.F.
PK-ESCR 713 A	CHAIN LINK FENCE 5’-0” HT.	L.F.
PK-ESCR 713 B	CHAIN LINK FENCE 6’-0” HT.	L.F.
PK-ESCR 713 C	CHAIN LINK FENCE 14’-0” HT. 1 ¾” MESH (TENNIS)	L.F.
PK-ESCR 941	GALVANIZED STEEL CHAIN LINK FENCE – 4’-0” HT.	L.F.

END OF SECTION

SECTION PK-ESCR 715 SC - ALLOWANCE FOR SECURITY CAMERA SYSTEM WORK AT EAST RIVER HOUSING PARKING LOT

ESCR 715 SC.1. DESCRIPTION.

Under this item, the Contractor is required to perform the removal and installation of the security camera system due to the demolition of the existing security building and relocation of the parking lot entrance at the parking lot at East River Housing (ERH) as directed by the Engineer. The security camera system installation work will consist of:

- relocating existing and associated electrical wiring and security camera systems to a location as directed by the Engineer;
- replacement of associated electrical wiring and security camera systems to a location as directed by the Engineer
- installation of a new security camera system, as well as related mounting systems and / or free standing support systems as approved by the Engineer;
- All other unforeseen security camera system related work.

PK-ESCR 715 SC.2. QUALITY ASSURANCE.

The Contractor or subcontractor that will relocate and / or install the security camera systems shall have not less than ten (10) years of continuous experience in the installation operations required to install security camera systems or other related electrical work that may be required to complete the work.

PK-ESCR 715 SC.3. MATERIALS.

The Contractor must provide manufacturer documentation in order to verify new materials to be installed or constructed as directed and approved by the Engineer.

PK-ESCR 715 SC.4. CONSTRUCTION DETAILS.

Prior to performing any work within the ERH property, i.e. demolition as well as prior to performing any work under this Item, the Engineer will coordinate with the Contractor to define the scope of “security camera system work” required. The Contractor will then provide the Engineer an estimate to perform the agreed to work. The Engineer will then review and once approved, direct the Contractor to begin work.

If during the course of the work there is an unforeseen changed condition that was not documented in the scope of “security camera system work”, the Contractor must stop work and notify the Engineer. All parties must agree to any changes to the original scope prior to restarting the additional security camera related work.

The Contractor is responsible to complete the “security camera system work” to the satisfaction of the Engineer.

PK-ESCR 715 SC.5. MEASUREMENT.

The unit price for the security camera system work shown in the Bid Schedule for this item must be included in the total bid price; however, actual payment to the Contractor will be based on the actual invoices submitted by the Contractor. The invoice must be based on the approved Contractor’s estimate and satisfactorily completed with signoff from the Engineer.

PK-ESCR 715 SC.6. BASIS OF PAYMENT.

The “unit price” shown in the proposal for the security camera system work must be considered the price bid for this item. The unit price is not to be altered in any manner by the bidder. Should the amount shown be altered, the new figures will be disregarded and the original price will be used to determine the total amount bid for the contract. The sum of the unit prices is included in the bid solely to ensure that sufficient monies will be available to pay the Contractor for this work. No guarantee is given that the total amount shall be fully or partly used.

The “unit price” payment made under this item must be equal to the sum of all invoices of approved estimates per the scope submitted by the Contractor for this item, as approved by the Engineer.

The unit price must cover the cost of all labor, materials, equipment, insurance, and incidentals necessary to complete the work as per the Engineer’s approved scope of “Security Camera System”, and in accordance with the new design if applicable, the contract drawings, the specifications and the directions of the Engineer. Pavement restoration will be paid for separately under the appropriate items.

Payment will be made under:

Item No.	Item	Pay Unit
PK-ESCR 715 SC	ALLOWANCE FOR SECURITY CAMERA SYSTEM WORK AT EAST RIVER HOUSING	F. S.

END OF SECTION

SECTION PK-ESCR 717 – SHREDDED BARK MULCH

WORK: Under this Item, the Contractor shall furnish and place SHREDDED BARK MULCH in accordance with the plans, specifications, and directions of the Engineer.

MATERIAL: Shredded Bark Mulch shall be a natural forest product composed of shredded bark or wood not exceeding three inches (3") in length and one inch (1") in width. Mulch shall be derived from tree material, not from wood waste or by-products like sawdust, shredded palettes, or other debris. Mulch shall be natural in color and not dyed. It shall be of a uniform grade with no additives or any other treatment. Mulch with leaves, twigs, and/or debris shall not be acceptable. The pH factor should range from 5.8 to 6.2.

Commercial Fertilizer Low Phosphorus (Slow Release): shall have the following composition by weight: Nitrogen (N) shall be min. 7% - max. 10%, of which min. of 50% is slow-release; available Phosphorus (P) shall be min. 1% - max. 2%; and soluble Potash (K) shall be min. 4% - max. 12%.

Fertilizer shall be a pesticide free (no weed-and-feed) product such as "Healthy Turf (8-1-9)" as manufactured by Plant Health Care, Inc, Pittsburgh, PA; or Safer Ringer Lawn Restore (10-2-6) as manufactured by Woodstream Corp., Lifitz, PA; or Nutrients Plus (7-2-12) as manufactured by Nutrients Plus, Virginia Beach VA, or approved equal.

All Commercial Fertilizer Low Phosphorous (Slow Release) shall be delivered in standard size bags of the manufacturer, showing weight, analysis, and name of manufacturer. It shall be stored as directed by the Engineer in such a manner that its effectiveness will not be impaired.

METHOD: Upon completion of planting and prior to application of shredded bark, Commercial Fertilizer Low Phosphorous (Slow Release) shall be incorporated into soil to a depth of three inches (3") at the rate of twenty pounds per thousand square feet. ((20 lbs./1,000 s.f.)

Shredded bark mulch shall be applied to the surface of the beds and tree pit areas, as shown on the plans or Standard Details and as directed by the Engineer. Mulch shall be applied to a uniform depth of three to four inches (3"-4") over the tree pit and shrub bed areas and two to three inches (2"-3") over groundcover beds, and shall be so distributed as to create a smooth level cover over the exposed soil. Plants shall not be covered.

MEASUREMENT AND PAYMENT: The quantity of **SHREDDED BARK MULCH** to be paid for under this item shall be the number of **SQUARE YARDS** of mulch measured in final position, furnished and installed in accordance with the plans, specifications, and directions of the Engineer.

The price bid shall be a unit price per **SQUARE YARD** and shall include the cost of all labor, materials, and equipment necessary or required to complete the work including furnishing and applying Commercial Fertilizer Low Phosphorous (Slow Release), mulch, and watering, all in accordance with the plans and specifications, to the satisfaction of the Engineer.

Landscape Fabric shall be paid for separately under its own item.

Item No.	Item	Pay Unit
PK-ESCR 717	SHREDDED BARK MULCH	S.Y.

END OF SECTION

SECTION PK-ESCR 727 – PERMEABLE CONCRETE PAVER AND STONE BASE

WORK: Under this Item, the Contractor shall furnish and install **PERMEABLE CONCRETE PAVERS ON STONE BASE** and **SUBBASE MATERIAL FOR PERMEABLE PAVEMENT** in accordance with the plans, specifications, and directions of the Engineer.

Under the item "Permeable Concrete Pavers On Stone Base", the Contractor shall install permeable concrete pavers, the specified bedding course with joint filler, and the specified base course. Under the item "Subbase Material for Permeable Pavement", the Contractor shall install the specified subbase material at locations shown on contract plans.

MATERIALS: Unless otherwise specified, the materials shall meet the requirements of the NYCDOT Standard Highway Specifications.

Permeable Pavers: Pavers shall be as shown on plans have interlocking spacer bars and be installed in the pattern as shown on the plans. Pavers shall be as shown on the plans and shall be manufactured from high quality, atmospherically cured precast concrete having a minimum compressive strength of 7,500 P.S.I. and a maximum water absorption of five (5%) percent. Pavers shall conform with ASTM C936. The face of pavers shall be at right angles with all sides, except where circular or other specialty pavers are specified. However, all pavers to be used on the work shall be of the same manufacture and thickness.

Permeable Stone Base and Joint Filler: Stone for permeable base and joint filler shall consist solely of crushed ledge rock and shall be broken stone or gravel as defined in the NYCDOT Standard Highway Specifications free draining, well graded, uniformly mixed washed stone aggregate. All stone shall be washed with less than 1% passing the No. 200 sieve. The total thickness of the foundation base shall be as shown on the drawings. Foundation base shall consist of three layers, a subbase course, a base course and a bedding course. Materials shall be in accordance with ASTM D448 and shall meet the gradations shown below:

Subbase Course ASTM D448 No. 2 (2 ½" – 3" Clean Stone)

Sieve Size	Percent Passing
3"	100 %
2 ½"	90 – 100 %
2"	35 – 70 %
1 ½"	0 – 15%
¾"	0 – 5%

Base Course ASTM D448 No. 57 (3/4" Clean Stone)

Sieve Size	Percent Passing
1 ½""	100 %
1"	95 – 100 %
½"	25 – 60 %
No. 4	0 – 10%
No. 8	0 – 5%

Bedding Course ASTM D448 No. 8 (1/4" – 3/8" Clean Stone)

Sieve Size	Percent Passing
1/2"	100 %
3/8"	85 – 100 %
No. 4	10 – 30 %
No. 8	0 – 10%
No.16	0 – 5%

Joint Filler ASTM D448 No. 9 (No.4 – No. 16 Clean Stone)

Sieve Size	Percent Passing
3/8"	100 %
No. 4	85 – 100 %
No. 8	10 – 40%
No.16	0 – 10%
No. 50	0 – 5%

Expansion Joint: The expansion joint material shall be one of the following:

A. premoulded bituminous fiber joint filler as specified in Section "B" (requires a bond breaker and sealant) or,

B. premoulded closed cell expanded polyethylene foam joint filler such as MasterSeal 920 by BASF, Inc., Shakopee, MN (requires only sealant) or an approved equal.

Bond Breaker: If bituminous fiber material is used, a bond breaker such as one-half (1/2) inch width polyethylene tape or five-eighths (5/8) inch diameter expanded polyethylene foam backer rod shall be installed as recommended by manufacturer. A bond breaker will not be required for a premoulded foam joint, but sealant is always required.

Sealant: Prepared expansion joints shall be coated with a primer followed by installation of a bond breaker and a self-leveling two-component polyurethane-based elastomeric sealant. The Contractor shall apply Sikaflex 429 primer with Sikaflex - 2C, SL sealant, or BASF MasterSeal SL P 173 with MasterSeal SL 2 sealant, or approved equal. Color of sealant shall be concrete gray. Asphalt cement will not be approved as a sealant.

Sikaflex products are manufactured by Sika Corp., Lyndhurst, N.J. MasterSeal products are manufactured by BASF, Inc., Shakopee, MN.

Geotextile: Geotextile around the permeable foundation base shall conform to the standard specification for "Geotextile – Drainage".

INSTALLATION:

Preparation of Subgrade: Before any stone base is placed upon the fine grade, the fine grade shall be prepared to line and grade and compacted where practicable with an approved self-propelling roller weighing not less than ten (10) tons. All hollows and depressions which develop under rolling shall be filled with acceptable material and shall again be rolled. This process of shaping, filling, and rolling shall be repeated until no depressions develop.

The Contractor shall remove from the subgrade all debris, foreign material, and all other undesirable material designated by the Engineer. The fine grade shall not be muddy or otherwise

unsatisfactory when the foundation material is placed upon it. If the fine grade becomes rutted or displaced, due to any cause whatsoever, the Contractor shall regrade same without additional payment.

Geotextile: After the ground has been prepared, the fabric shall be rolled directly on the ground. All seams shall be overlapped approximately six (6") inches. No equipment, materials or machinery shall be placed on or be transported over exposed fabric. Stone base shall then be carefully placed to prevent dislocation of the fabric.

If the fabric is damaged during installation, the rupture shall be removed and the damaged area shall be covered with a patch of new fabric which will overlap the undamaged fabric approximately six (6") inches in all directions. All repaired fabric surface costs will be deemed part of the price bid.

Base Material for Permeable Pavement: Subbase and base course material shall be evenly spread on a prepared sub-grade in the position shown on the plans or directed by the Engineer, in four inch (4") lifts, each lift to be rolled while moist with a seven (7) to twelve (12) ton tandem roller (or other approved method satisfactory to the Engineer), to the thickness shown on the plans or as directed by the Engineer. The surface tolerance of the compacted base shall not deviate more than one (1") inch over a ten (10') feet straightedge.

Bedding Course: The spreading of the bedding course shall be accomplished using suitable equipment from piles dumped along the proposed site. The bedding course material shall be evenly spread over the compacted base so that the course will have, after rolling, the required thickness. No segregation of large or fine materials will be allowed, but the bedding course, as spread, shall be well graded with no pockets of fine material.

Concrete Pavers: Pavers shall be clean when placed. Pavers which are not satisfactorily clean shall be washed before placing. The pavers shall be placed according to the patterns shown on the plans, true to line and grade unless otherwise noted on the plans, joints shall be hand tight. The bedding course in front of the pavement shall not be disturbed or walked on during the laying of the pavers.

After the pavers are placed, the joint filler material shall be swept into the joints and pavers settled into the bedding course with a mechanical vibrator of adequate size. Additional joint filling material shall be added as necessary to fill the joints and the area re-compacted. All joints shall be completely filled and water sprayed to ensure compaction of the joint filler in the joints. After the joints are completely filled, the pavement shall be swept clean.

After a sufficient area of pavement has been laid, the pavement shall be tested with a ten foot straight edge and any depressions exceeding one-quarter inch (1/4") shall be corrected and brought to proper grade. Any pavers disturbed in making replacements or correcting depressions shall be settled into place by ramming.

Pattern: The paver pattern shall be subject to approval by the Engineer. Laying patterns and paver designs which are approved for the work are indicated on the contract plans. All edges, borders, and corners of paved areas shall be finished to true and neat lines. Special cutting, color patterns, various shapes, and variations in size and finish, are all to be included in the square yard bid price of this item.

SUBMITTALS: All submittals shall be in accordance with S-Pages.

Samples: The Contractor shall submit two (2) full samples for each color specified, of the pavers they propose to use for approval by the Engineer. All pavers used on the work shall conform to the approved samples.

Permeable Stone Base: One three-pound (3 lb.) bag for each layer of the permeable stone base shall be submitted for approval, with a sieve analysis and name of supplier attached. All samples shall be clearly labeled with Contract No. and name of supplier.

Mockups: Build mockups to set quality standard for fabrication and installation. The Contractor must provide a mockup of a 20'x20' area. Approved mockups may be incorporated into the final work, if approved by the Engineer.

MEASUREMENT AND PAYMENT: The quantity of **PERMEABLE CONCRETE PAVERS ON STONE BASE** to be paid for under this Item shall be the number of **SQUARE YARDS** of pavement constructed in accordance with the plans and specifications, as directed by the Engineer.

The price bid shall be a unit price per **SQUARE YARD** of Permeable Concrete Pavers On Stone Base including bedding course, joint filler, and base course and shall include the cost of all labor, materials, equipment, and incidental expenses necessary to complete the work, all in accordance with the plans and specifications, to the satisfaction of the Engineer.

The quantity of **SUBBASE MATERIAL FOR PERMEABLE PAVEMENT** to be paid for under this Item shall be the number of **CUBIC YARDS** of subbase constructed in accordance with the plans and specifications, as directed by the Engineer.

The price bid shall be a unit price per **CUBIC YARD** of Subbase Material For Permeable Pavement and shall include the cost of all labor, materials, equipment, and incidental expenses necessary to complete the work, all in accordance with the plans and specifications, to the satisfaction of the Engineer.

Excavation and geotextile-drainage shall be paid for separately under its own contract item.

Item No.	Item	Pay Unit
PK-ESCR 727 A	PERMEABLE CONCRETE PAVER AND STONE BASE	S.Y.
PK-ESCR 727 B	SUBBASE MATERIAL FOR PERMEABLE PAVEMENT	C.Y.

END OF SECTION

SECTION PK-ESCR 730 – STEEL FLAGPOLE

WORK: Under this item, the Contractor shall furnish and erect a single **STEEL FLAGPOLE - 45 FOOT HIGH**, complete with fittings, including construction of foundation, granite base, halyard, and flags, in accordance with the plans, specifications, and directions of the Engineer.

INTENT: The intent of this item is to construct a complete flagpole fabricated by a single manufacturer. The completed flagpole shall be delivered to an approved factory for hot dip galvanizing and shop applied finish coatings in accordance with the Contract Plan, Specifications, and the approved Shop Drawings.

The Contractor shall coordinate the work and delivery of the flagpole between manufacturer and galvanizer and supply all parties involved with the relevant information required to construct, finish, and install the flagpole.

MANUFACTURER: The flagpole shall be similar in design and manufacture to that fabricated by Pole-Tech, Inc., East Setauket, N.Y., or approved equal. The galvanizing and finish coats for flagpole shall be similar to Duragalv, Primergalv, and Colorgalv, as manufactured by Duncan Galvanizing Corp., Everett, MA, or approved equal.

MATERIALS: Unless otherwise herein specified, all materials of construction shall comply with the requirements of the NYCDOT Standard Highway Specifications.

Hardware: Shall be stainless steel 18-8.

Foundation: Concrete for foundation shall be air-entrained, Controlled Concrete (f'c=4,000 psi), with a minimum of seven (7) bags of cement per cubic yard of concrete. Controlled concrete shall meet all requirements set forth in Chapter 19 of the New York City Building code, as amended to date. Cement shall comply with the A.S.T.M. specifications for Portland Cement, Designation C150 and shall be Type IIA, moderate sulfate resistant.

Grounding: Grounding system shall consist of three (3) copper bonded ground rods, copper grounding cable (size #2/0), PVC through sleeve and grounding connectors. Grounding system shall comply with all national and local laws, ordinances and safety standards that apply to lightning protection. All components shall be similar to that manufactured by Heary Brothers Lightning Protection Co., Inc., Springville, N.Y., or approved equal.

Steel Bar Reinforcement: Reinforcement shall meet the requirements of the applicable paragraphs of the NYCDOT Standard Highway Specifications, the N.Y.C. Building Code, and the latest ASTM specification for "Deformed and Plain Billet-Steel Bars for Concrete Reinforcement", Designation A-615 and in accordance with the Item "Steel Bar Reinforcement". Reinforcement shall be of the sizes and dimensions shown on the plans. Flagpole: The flagpole shall be cone tapered steel having a uniform straight line taper of one inch for every 7.14 feet of height. The flagpole shall have a butt diameter of eight and five-eighth inch (8 5/8") and a minimum butt wall thickness of 0.322". Steel for pole shall conform to ASTM A53 type S, Grade B.

Granite: Granite shall be sound, durable, properly quarried, free from reeds, rifts, laminations, and minerals which, by weathering, would cause discoloration, reasonably uniform in quality and texture throughout, free from an excess of mica and feldspar, seams, scales, or evidence of disintegration. Granite shall be "Mt. Airy White", as manufactured by North Carolina Granite, Mt. Airy, NC, or "Bethel White" or "Barre Gray" as manufactured by Prestige Stone Designs, North

Arlington, NJ, or “Iridian”, as manufactured by Cold Spring Granite, Cold Spring, MN, approved equal.

All exposed surfaces of granite shall have a thermal finish. All exposed surfaces must be out of wind, free from waves, projections, or depressions on the faces of the granite. Arrises must be cut sharp and true to square or pattern.

The granite base shall consist of a single piece of granite, perforated to leave a hole for flagpole, and provided with Lewis holes on concealed surfaces, for handling.

Sleeve Tube Assembly: The corrugated steel sleeve tube and plate with three T-ribs cut to wedge shape and welded at bottom shall be as shown on the detailed drawing. The entire sleeve tube assembly shall be hot-dip galvanized after fabrication.

Collar: The Ornamental collar at the base of the flagpole shall be constructed of cast aluminum alloy 43-F. It shall be cast in one piece and shall have a minimum thickness of one-quarter inch (1/4"). The profile shall be as shown on the detail.

Mortar: All mortar for pointing and setting granite shall be composed of one part non-staining Portland Cement and two (2) parts of fine screened sand.

Truck: The truck shall be non-fouling, double revolving type with stainless steel ball bearing races, and cast aluminum body with two (2) two and three-eighth inch (2 3/8") diameter aluminum sheaves as shown on the detailed drawings or as directed by the Engineer.

Ball: The finial shall be a ten inch (10") diameter copper ball with 23 Kt. gold leaf finish, attached to a five-eighth inch (5/8") copper diameter rod and mounted on the truck.

Aluminum Cleat: One (1) nine inch (9") cast aluminum cleat finished to match pole shaft, and secured to the pole with two inch (2") stainless steel flathead machine screws.

Cleat Cover Box: Install a new single cleat cover box. The new single box shall be radial in shape and constructed to enclose the cleat as shown on the detailed drawings. The new box shall be constructed of either steel or aluminum. The steel version of the new single box shall be fabricated of ten (10) gauge plate steel with joints welded with a continuous, full penetration weld and ground down flush with the adjacent surface and slightly rounded at corners, with a stainless steel piano hinge and hasp spot welded. The piano hinge shall have a fast pin of stainless steel. The steel box shall be hot dip galvanized after fabrication. The aluminum version shall be constructed either of sand-cast aluminum or welded aluminum plate. The sand-cast box is fabricated of aluminum alloy 43F, with a thickness of one-quarter (1/4”) inch, given a satin finish and heavily waxed. The welded aluminum box is fabricated of one-quarter (1/4”) inch thick 6063-T6 aluminum alloy with joints welded and ground down flush with the adjacent surface and slightly rounded at the corners. Hinges and hasp shall be of stainless steel 18-8, secured to the box with SS rivets or tamperproof ½”-20 NC machine screws. Hinges shall have fast pins of stainless steel. The box shall be secured to flagpole with stainless steel machine screws at a height of ten (10’) feet above grade to centerline of cleats. The new box shall be similar to that manufactured by Pole-Tech, Inc., East Setauket, N.Y., or approved equal. The Contractor shall also furnish a one and one-half (1 ½’) inch brass padlock with five (5) pin tumblers, for hasp of box, similar or equal to American Lock No. 5531, as manufactured by American Lock Co., Crete, IL. Two (2) keys shall be supplied to the Engineer. Contractor shall submit shop drawing showing all dimensions and hardware.

Halyard: The Contractor shall furnish and install one (1) halyard. The halyard shall be 5/32" overall diameter clear vinyl coated 7 x 19 strand core stainless steel aircraft cables secured with four (4) hot galvanized wire rope clips. Two brass boat snaps per halyard, equal to catalogue No. 249 of Mahony-Clarke, Inc., No. 2 size, three-quarter inch (3/4") inside diameter of eye and three and one-half inch (3 1/2") overall length, shall be attached to the halyard with two (2) additional wire rope clips in such a way to allow passage of the halyard around the sheaves.

Galvanizing and Finish Coats: The entire steel flagpole, except aluminum and non-ferrous components shall receive three (3) coats. After surfaces have been cleaned in a sodium hydroxide solution, they shall be finished as follows:

First Coat: Apply hot-dip galvanized coating with a minimum 0.05 percent nickel content. Thickness of coating to be 6 to 8 mils. Coating shall conform to ASTM A123 and A153. The galvanized coating shall be Duragalv, as manufactured by Duncan Galvanizing Corp., Everett, Ma., or approved equal.

Second Coat: Apply a shop coat of polyamide epoxy primer within twelve (12) hours after galvanizing. Thickness of prime coat shall be a minimum of two (2) mils. The primer shall be Primergalv as manufactured by Duncan Galvanizing Corp., Everett, MA., or approved equal.

Third Coat: Apply a shop coat of polyurethane color topcoat immediately after application of the prime coat. The topcoat shall be Colorgalv 10 semi-gloss, as manufactured by Duncan Galvanizing Corp., Everett, MA., or approved equal.

Painting: All aluminum and non-ferrous components of flagpole shall receive two (2) shop coats. After surfaces have been solvent cleaned and prepared, they shall be painted as follows:

First Coat: Sherwin Williams # Kem Bond® HS Metal Primer, B50WZ4, off white, as manufactured by Sherwin Williams Company, Woodside, NY, or approved equal. Primer is an fast drying, 81% + 2% weight solids, low VOC, rust inhibiting, modified alkyd metal primer with a dry film thickness of 3-4 mils. Paint requires two and a half (2 ½) hours drying time before recoating (with alkyds). Performance shall meet or exceed the standards of Federal Specification TT-P-664D.

Second Coat: Sherwin Williams Steel Master 9500 Silicone Alkyd, as manufactured by Sherwin Williams Company, Woodside, NY, or approved equal. Topcoat is a silicon alkyd, high gloss coating having a dry film thickness of 2 -4 mils. Paint shall perform in accordance with ASTM G-53.

Color: Flagpole shall be finished in white. The ornamental collar shall be finished in black enamel. All flagpole parts shall be painted prior to installation.

EXECUTION:

Excavation: Excavation shall be cut accurately to the lines and levels shown on the plans, and where soil conditions allow, excavation shall be finished true and square so that concrete foundations may be poured without use of forms. Bottom of excavation shall be filled with concrete, and under no circumstances shall excavated material be used for such filling below footing.

If forms are used for construction of concrete foundations, the excavation shall be at least one foot larger than the concrete work, to permit work on the forms. After the removal of the forms, the space around the concrete footing shall be backfilled with acceptable material, thoroughly rammed and tamped in place.

No concrete shall be poured until after the excavation has been inspected and approved by the Engineer.

Concrete: The concrete foundation shall be placed in two (2) pours. The concrete for the footing shall be poured and allowed to set before setting and grouting of socket tube. Concrete for upper portion of the foundation shall be placed after socket tube, inserts, reinforcing and PVC sleeve for ground cable have been properly set and secured to maintain their proper position during pouring. Concrete, during and immediately after placing, shall be thoroughly tamped to remove all voids in the mix. Concrete mix per Section ESCR-4.06.

Where it is necessary to extend the footings to obtain satisfactory bearing, the Contractor will be paid for the additional excavation and concrete under their respective Items.

Sleeve Assembly: Sleeve Assembly tube shall be carefully and accurately plumbed. Beds and Joints: All beds and joints shall be cut full and square for at least two inches (2") at beds and may fall off not over one inch (1") in twelve inches (12"), and shall be reasonably free from large depressions. All joints shall be of uniform width of three-sixteenths inch (3/16") at arris line. All jointing shall be as shown on the plans.

Setting: All granite shall be set in a full bed of mortar. Granite shall be brushed, cleaned, and drenched with water immediately before setting.

Cleaning and Protection: After setting is completed, the granite work shall be thoroughly cleaned down with a solution of soap powder and water and a second washing with clear water so as to remove all detergents used in cleaning granites, and the use of any acid solution in cleaning is strictly prohibited. No granite shall be set during freezing weather except by written permission of the Engineer, and after setting, all corners, edges and projections shall be adequately protected from staining at all times until the completion of the work and Substantial Completion.

Setting Pole: The pole shall not be set until after the concrete has thoroughly hardened, and in no case sooner than eight (8) days after pouring of the concrete. The copper grounding cable shall be mounted to the grounding pad and sleeved through the concrete foundation before the pole is set.

The pole shall be set into the sleeve assembly so as to wedge securely at bottom, then carefully plumbed and wedged at top of socket hole with wedges as shown, to hold pole securely in a vertical, plumb position. After wedging the pole, the space between pole and socket hole shall be filled with dry sand to within two inches (2") of the top of hole, well compacted by tapping pole and tamping. Sand shall be heated to eliminate all moisture. The annular space at the top of the granite base shall then be packed with a non shrink grout.

The space between pole and collar shall be filled with a polyurethane elastomeric sealant similar to Sikaflex-1A or approved equal.

Protection of Flagpole: Flagpole shall be well wrapped and protected while in transit between shops and delivery to site. Damages or defects occurring shall be repaired at the Contractor's expenses. Damages to finish shall be restored with an organic zinc primer and an approved topcoating in accordance with the manufacturer's recommendations.

SPECIAL INSPECTIONS AND TESTING: Third-party inspections and independent testing shall be performed for soil compaction, steel welding, steel reinforcement, concrete strength, final installation, and any other materials as required by the New York City Building Code. The contractor is responsible for coordinating all third-party inspections and obtaining permits. All testing shall be performed in accordance with S-Pages.

SUBMITTALS: All submittals hall be in accordance with the requirements of S-Pages.

Shop Drawings: Shop drawings are required. Shop Drawings shall show general layout including jointing of flagpole and complete anchoring and foundation with dimensional information.

Granite Samples: The Contractor shall submit to the Engineer for approval two (2) 8"x12" samples of granite they propose to use. Samples shall be dressed as specified and show the extreme variation in quality, color, and texture that will occur in the granite to be used.

Color and Finish Sample: Contractor shall submit two (2) samples of shop-applied finish coats and color of the steel flagpole.

Substitutions: A written request for substitution of manufactured products or coating systems must be submitted as per S-Pages. The Contractor shall submit this request, along with manufacturer's data sheets for approval, a minimum of two weeks prior to the intended date of construction. All substitutes must be approved in writing prior to use.

Concrete Test Results: Concrete Foundation test results shall be signed and submitted on testing company letterhead.

Coating Warranty: The Contractor shall furnish a ten (10) year coating system warranty from the flagpole coating provider. The Warranty shall name the City of New York as the Project Owner and Purchaser, and shall protect the total flagpole surface area against 10% or more visible rust over a ten year period from the effective date of the warranty.

MEASUREMENT & PAYMENT: For furnishing and erecting **STEEL FLAGPOLE - 45 FOOT HIGH**, complete, in accordance with the plans, specifications, and directions of the Engineer, the Contractor shall receive the unit price bid.

The price bid shall be unit price for **EACH** Steel Flagpole constructed and shall include the cost of all labor, materials, and equipment required to furnish and erect flagpole including granite, controlled concrete foundation, flags, halyard, cleat, finishing, reinforcing steel, unclassified excavation, backfill, grounding system, coordination for third-party inspections, and all other incidentals necessary to complete the work in accordance with the plans and specifications, to the satisfaction of the Engineer.

Piling, where required, shall be paid separately under the item "Timber Piles" or "Helical Screw Piles." Third party inspections, as required by NYC Department of Buildings, shall be paid for separately.

Item No.	Item	Pay Unit
PK-ESCR 730	**STEEL FLAGPOLE**	**EA**

END OF SECTION

SECTION PK-ESCR 736 – CORE DRILLING

WORK: Under this Item, the Contractor shall Core Drill holes of the indicated sizes into rock or masonry for the setting of fence and gate posts, as indicated on the plans or as directed by the Engineer.

METHODS: Holes shall be drilled in masonry and rock by approved core drilling methods and equipment. The holes shall be of the sizes and depths indicated on the plans, required by local conditions or as directed by the Engineer. Care shall be taken while drilling in masonry that no damage will be done. Any damage to existing masonry resulting from drilling operations shall be repaired by the Contractor at the Contractor's own cost and expense.

MEASUREMENT AND PAYMENT: The quantity of **CORE DRILLING - 3" DIAMETER** and **CORE DRILLING - 4" DIAMETER** to be paid for, shall be the number of LINEAR FEET of holes actually drilled, of the indicated sizes, in accordance with the plans, specifications, and directions of the Engineer.

The price bid shall be a unit price per **LINEAR FOOT** of holes drilled of each size and shall include the cost of all work, labor, materials, and equipment required to complete the work in accordance with the plans and specifications, to the satisfaction of the Engineer.

Item No.	Item	Pay Unit
PK-ESCR 736	CORE DRILLING	L.F.

END OF SECTION

SECTION PK-ESCR 737 – STEEL PIPE BOLLARD

WORK: Under this item, the Contractor shall furnish, erect, and powder coat **STEEL PIPE BOLLARD** in accordance with the plans, specifications, and directions of the Engineer.

MATERIALS: Steel Pipe Bollard shall be as manufactured by All City Play Equipment, Metuchen, NJ, Shannon Gates and Railings, Deer Park, NY, or approved equal.

All fittings and hardware shall be of the materials listed in the following schedule:

PART	MATERIAL
Post Caps	Malleable Iron - 3/16" thick
Drive Pins and Set Screws	Stainless Steel, 18-8
Flange	Pressed Steel
"U" Bolts	Pressed Steel, Extra Heavy-3/4” X 1/2”

Malleable iron castings shall be hot dipped galvanized in accordance with ASTM Serial Designation A-153 and powder coated per this specification.

Pressed steel fittings and appurtenances shall be powder coated and hot dipped galvanized in accordance with ASTM Serial Designation A-123.

Posts: Posts shall be extra strong galvanized steel pipe, 4" O.D. and shall conform to ASTM Serial Designation A53, Type S, Grade B, Schedule 80, except that pipe shall be unthreaded and untested for water pressure.

Sleeves: Sleeves shall be standard weight galvanized steel pipe, 5" I.D. and shall conform to ASTM Serial Designation A53, Type S, Grade B, Schedule 80, except that pipe shall be unthreaded and untested for water pressure.

Padlocks: One padlock shall be furnished for each removable bollard. The padlocks shall be Master Pro Series 6125LJ, as manufactured by Master Lock Company, or approved equal. All padlocks for the same park facility shall be keyed alike, with two and three-eighth inch (2 3/8") width, by three-quarter inch (3/4") thick laminated steel body, maximum security, five (5) pin tumblers with hardened boron alloy shackle no less than three-eighths inch (3/8") diameter, two and one-half inches (2 1/2") vertical clearance and 29/32” inches horizontal clearance. The Contractor shall furnish two (2) keys for each padlock.

Concrete: Concrete shall be placed as shown. Concrete shall conform to N.Y.C. Dept. Of Transportation Standard Highway Specifications class B-32, Type II A, air entrained, moderate sulphate resistant. The batch shall contain a minimum of six (6) bags of cement per cubic yard of concrete, maximum of 6¼ gallons of water per bag, a maximum of three (3") inch slump, and a minimum compressive strength of 3,200 psi. Large aggregate shall be limited to one (1") inch.

Cement: Air Entraining Portland Cement shall comply with the ASTM Specification for Portland Cement, Designation C150. It shall be Type IIA, Moderate Sulfate Resistant.

Fly Ash/GGBFS: A maximum of thirty (30 %) percent of Portland Cement content may be substituted with Fly Ash or Ground Granulated Blast Furnace Slag. Fly Ash shall conform to the requirements for Class F as defined by ASTM C618 – “Standard Specification for Coal Fly Ash and Raw or Calcined Natural Pozzolan for Use in Concrete”. Ground Granulated Furnace Blast Slag (GGBFS) shall conform to the requirements for Grade 100 or 120 slag as defined by ASTM C989 – “Standard Specification for Slag Cement for Use in Concrete and Mortars”. Portland Cement substitutions that demonstrate the same or similar properties as Fly Ash/GGBFS shall be accepted pending review and approval by the Engineer.

ERECTION: The posts for fixed bollards shall be set in concrete footings as shown on the plans or as directed by the Engineer. Once erected, steel pipe of the fixed bollard shall be filled with concrete for park structures. The sleeves for removable bollards shall be set in concrete footings, as shown on the plans or as directed by the Engineer.

All posts and sleeves shall be set plumb and true to line and grade. Any post and sleeve not set true to line and grade shall be removed and replaced at the Contractor's expense. Bending posts to make them plumb will not be permitted.

POWDER COATING: The galvanized steel pipe and fittings shall be powder coated with TGIC Polyester.

Galvanizing shall provide an acceptable substrate for applied powder coatings. No lacquer, urethane or other coatings which would prevent proper adhesion of powder coating shall be applied to the pipe and fittings. The powder coating shall be applied to the galvanized pipe and fittings in such a manner that the coating will not peel off. Ensure surfaces to be coated are clean and dry and free of grease, dust, rust, etc. All coated parts shall first receive phosphating and chromatizing treatments to improve the adhesion of the surface coating. Color to be black unless otherwise indicated on the plans. The TGIC-Polyester shall be applied at a film thickness of 3 to 4 mils by electrostatic spray process and bake finished per manufacturer's directions. The TGIC-Polyester shall be applied without voids, tears or cuts that reveal the substrate and shall thoroughly adhere to the metal without peeling when scratched with a pick device or knife blade point.

Laboratory Test For TGIC-Polyester Powder Coat: At the discretion of the Engineer, a sample TGIC-Polyester powder coated bollard shall be laboratory tested for bonding of the powder coating to the metal. Test shall be the Cross Hatch test per ASTM D3359, method B. Failure to satisfactorily pass this test shall be a basis for rejection.

TOUCH-UP & REPAIR: For minor damaged caused by installation or transportation, clean damaged area, then;

1. On damaged galvanized surfaces, apply organic zinc repair paint complying with ASTM A780, then repair powder coating per number 2 below. Galvanizing repair paint shall have 65 percent zinc by weight. Thickness of repair paint shall be not less than that required by ASTM A123.

2. On damaged powder coated surfaces, touch-up finish in conformance with manufacturer's recommendations. Provide touch-up such that repair is not visible from a distance of 6 (six) feet.

SUBMITTALS: All submittals shall be in accordance with the requirements of the S-Pages.

Shop Drawings: Before the work is started, the Contractor shall submit shop drawings for approval.

Design Mix report: The Contractor shall submit a design mix report per the requirements of the NYCDOT Standard Highway Specifications.

MEASUREMENT AND PAYMENT: The quantity of **STEEL PIPE BOLLARD** to be paid for under this item shall be the number of bollard furnished and installed in accordance with the plans, specifications, and directions of the Engineer.

The price bid shall be separate unit price for **EACH** Steel Pipe Bollard, furnished and erected, and shall include the cost for all labor, material, equipment, and incidental expenses necessary to complete the work, including excavation concrete for park structures, powder coating, and

padlock, where required, all in accordance with the plans and specifications, to the satisfaction of the Engineer.

Item No.	Item	Pay Unit
PK-ESCR 737	STEEL PIPE BOLLARD	EA

END OF SECTION

SECTION PK-ESCR 739 – SEED NEW LAWN

WORK: Under this Item, the Contractor shall SEED NEW LAWN areas with grass seed, ground limestone, fertilizer, and shall prepare seedbed and maintain lawn areas, in accordance with the plans, specifications, and directions of the Engineer.

INTENT: This specification is intended for rototilling and seeding new lawn of any size on either new or existing topsoil.

MATERIALS:

Grass Seed: Grass seed shall be fresh, recleaned seed of the latest crop, mixed in the following proportions by weight and meeting the following standards of pure live seed content (Purity & Germination) and maximum allowable weed seed content. All seed shall be free of noxious weeds and undesirable grasses.

GRASS SEED MIXTURE				
PERCENT BY WEIGHT	**GRASS SEED**	**PURITY**	**GERMINATION**	**MAXIMUM WEED SEED**
60%	TALL FESCUE - One or more of the following varieties: Apache II, Arid 3, Cochise III, Coronado Gold, Falcon IV, Justice, Jaguar III, Lancer (SH), Masterpiece, Rebel IV, Rebel Jr.(SH), Rebel Sentry, Rembrandt, Tomahawk E+, RTF or approved equal			
20%	BLUEGRASS - One or more of the following varieties: Able I (SH), Blacksburg, Glade (SH) Moonlight, Midnight, America (SH) Brilliant, Ram (SH), Touchdown (SH) Warren's A-34 (SH), Bristol (SH), Lofts 1757 (SH) or approved equal.	98%	80%	10%
20%	PERENNIAL RYEGRASS - One or more of the following varieties: Brightstar II, Manhattan4, Citation Fore, Elfkin or approved equal	98%	85%	25%

NOTE: The cultivars followed by "(SH)" exhibit better shade tolerance than other varieties, under moderate shade.

All seed shall be interagency certified under the auspices of a State Seed Improvement Cooperative and must bear their seals of certification on each fifty pound (50 lb.) bag. All Grass

Seed shall be delivered in sealed standard size bags of the vendor, showing weight, analysis, and name of vendor. It shall be stored as directed by the Engineer, in such a manner than its' effectiveness will not be impaired.

The Engineer reserves the right to reject, on or after delivery, all material which does not, in their opinion, meet these specifications.

The rate of seeding shall be ten pounds (10 lbs.) per one thousand (1,000) square feet.

Ground Limestone: (Calcium Carbonate) shall have the following analysis: at least fifty percent (50%) shall pass a 200 mesh sieve, at least ninety percent (90%) shall pass a 100 mesh sieve, and one hundred percent (100%) shall pass a ten (10) mesh sieve. Total carbonates shall not be less than eighty percent (80%) or 44.8% Calcium Oxide equivalent. For purposes of calculation, limestone may be substituted at the discretion of the Engineer, when wind conditions exceed five (5) miles per hour.

The Contractor shall, at the direction and discretion of the Engineer, furnish a certified report of chemical analysis of representative samples of the limestone which he proposes to use. All samples are to be taken by the Engineer and delivered to the laboratory; the price bid shall include inspection and laboratory charges. No limestone shall be delivered until the approval of samples by the Engineer, but such approval does not constitute acceptance of the material. The Engineer reserves the right to reject, on or after delivery, any material which does not, in their opinion, meet these specifications.

All limestone shall be delivered in standard size bags of the manufacturer showing weight, analysis, and name of the manufacturer. It shall be stored in such a manner that its effectiveness will not be impaired, as directed by the Engineer.

The rate of application of limestone per thousand (1,000) square feet shall be as follows, depending on the Hydrogen Ion concentration (pH) shown by a pH test (pH test to be provided by the Contractor at no additional cost to the City).

pH	**RATE(LBS.)**
Below 5.0	160
5.0 to 6.0	80
Over 6.0	0

Commercial Fertilizer Low Phosphorus (Slow Release): shall have the following composition by weight: Nitrogen (N) shall be min. 4% - max. 10%, of which min. of 50% is slow-release; available Phosphorus (P) shall be min. 0% - max. 2%; and soluble Potash (K) shall be min. 4% - max. 12%.

Fertilizer shall be a *pesticide free* (no weed-and-feed) product such as Roots Healthy Turf (8-1-9) as manufactured by Lebanon Turf, Lebanon, PA; Safer Ringer Lawn Restore II 10-0-6 as manufactured by Woodstream corp., Lifitz, PA; or approved equal.

All Commercial Fertilizer Low Phosphorus (Slow Release) shall be delivered in standard size bags of the manufacturer, showing weight, analysis, and name of manufacturer. It shall be stored as directed by the Engineer in such a manner that its' effectiveness will not be impaired. Application of any fertilizer on lawns or non-agricultural turf within 20 feet of a water body or on paved surfaces is restricted and may not be applied unless there is a buffer at least 10 feet wide of planted or naturally occurring vegetation, such as shrubs, trees and plants between the area receiving fertilizer and the water. Fertilizer shall not be applied between December 1 and April 1.

The rate of application Two (2) applications of acceptable commercial fertilizer shall be applied by machine, each application at the rate of ten (10) pounds per thousand (1,000) square feet or

as recommended by the manufacturer. The first application shall be made at the time of installation of seed.

The second application shall be made approximately six (6) months after the first application. This treatment shall take place during the next appropriate fertilizing season; that is, the following Spring or Fall, and shall be subject to the direction of the Engineer.

The second application shall be applied to the surface only. Incorporation shall be achieved by thoroughly watering the entire area after application. The Contractor shall provide all labor and materials including water if not available from NYC sources.

TIME OF SEEDING: Grass Seed shall be sown in the Fall during August and September, or in the Spring during March, April, and May, or at such other times as approved by the Engineer. All seeding is to be done in moderately dry to moist (not wet) soil and at times when the wind does not exceed a velocity of five (5) miles per hour.

PREPARATION OF SEED BED: Prior to seeding, all areas to receive seed shall be thoroughly loosened with a rototiller to a depth of six (6")inches. All surplus material such as sticks, stones, roots, vegetation, or other objectionable material which might interfere with the formation of a finely pulverized seed bed shall be removed from the soil and a smooth uniform surface grade shall be established. Hollows, depressions, and gullies shall be filled by raking to level and topsoil added as necessary to provide a smooth surface prior to seeding operations. Topsoil shall be spread over the area to receive seed to the depth indicated on the drawings and as required to achieve the designated finished grade. The seed bed shall be graded to true lines, free from all unsightly variations, bumps, ridges, or depressions.

Compost (where required, paid separately): shall be thoroughly incorporated into the top five inches (5") of soil, where seed will be installed on existing topsoil and where soil testing indicates low levels of organic matter. Where required, the compost shall be spread at the rate of one (1) cubic yard per one thousand (1,000) square feet unless otherwise directed by the Engineer. Where seed will be installed on new topsoil, compost shall not be added.

Amendments: After the compost has been incorporated into the existing soil, limestone (where required) and Commercial Fertilizer Low Phosphorous (Slow Release) shall be worked into the top three inches (3") of soil as directed by the Engineer.

All amendments must be submitted for approval, see SUBMITTALS: The Contractor shall notify the Engineer three (3) days prior to application of amendments.

INSTALLATION: Grass seed shall be sown, covered to the proper depth, and firmed in such a manner that a uniform stand of grass will result. All areas to receive seed shall then be compacted, using a two hundred pound (200 lb.) roller. The seed shall be thoroughly watered immediately after placement. The Contractor shall be liable for any damage to property caused by their sodding operations. All areas and construction disturbed shall be restored to their original condition, to the satisfaction of the Engineer.

WATERING AND MAINTENANCE: The Contractor shall maintain all seeded areas until Substantial Completion. The Contractor shall properly water as required to maintain optimum growing conditions for the new stand of grass until Substancial Completion. Where water is supplied from City hydrants, the Contractor shall obtain a hydrant permit from the Department of Environmental Protection. The Contractor is responsible for keeping the permits current. The

permits are available from each borough office. To obtain a permit, the Contractor should bring a copy of their contract with a general description of the hydrant location(s) they propose to access. The addresses of borough offices are:

Manhattan: 1250 Broadway (8th floor)

Brooklyn: 250 Livingston St. (8th floor)

Bronx: 1932 Arthur Avenue (6th floor)

Queens: 96-05 Horace Harding Ex., Corona

Staten Island: 60 Bay St (6th floor)

If water is not available from NYC sources, the Contractor is responsible for supplying water from their own source.

In absence of adequate rainfall, watering shall be performed daily or as often as necessary and in sufficient quantities to maintain moist soil to a depth of at least four (4") inches. Watering shall be done during the heat of the day to prevent wilting.

The first mowing shall not be attempted until the Seed is firmly rooted and secure in place. Not more than forty percent (40%) of the grass leaf shall be removed by mowing. The grass height shall be maintained between one and one-half inches (1 1/2") and three inches (3"), as directed by the Engineer, until Substantial Completion.

SUBMITTALS: Submittals shall be as per the S-Pages.

Seed Mix: The Contractor shall submit a document from the seed source for approval prior to delivery showing the seed composition and percentages of each grass type proposed.

Substitutions: At Contractor's discretion, sod may be proposed in lieu of seed at no additional cost to the City. Where approved, grades must be set one (1") inch lower to accommodate thickness of sod, all other provisions of this specification remain identical. At Contractor's discretion, when area to be seeded is 500 square yards or larger, hydroseeding may be proposed at no additional cost to the City. Where approved, all other provisions of this specification remain identical except hydromulch and seeding procedure shall match the NYCDPR's standard specification for hydroseeding.

Amendments: The Contractor shall submit proposed soil amendments for approval prior to delivery.

Invoices: The Engineer reserves the right to request contractor's invoices for all products used in this item.

MEASUREMENT AND PAYMENT: The quantity of **SEED NEW LAWN** to be paid for under this Item, shall be the number of **SQUARE YARDS** of lawn area prepared, seeded, and maintained, in accordance with the plans, specifications, and directions of the Engineer.

The price bid shall be a unit price per **SQUARE YARD** of seed new lawn and shall include the cost of grass seed, limestone (where needed), commercial fertilizer low phosphorus (slow release), dispose of surplus materials, and the cost of all labor, materials (including water), and equipment necessary or required to seed new lawn areas, in accordance with the plans and specifications, to the satisfaction of the Engineer.

Topsoil shall be paid for separately. Compost (where required, for existing soil only) shall be paid for under its respective contract item. The price of water, regardless of the source, shall be

considered part of the bid price.

Payment for work performed under this item shall be made as follows:

40%- after preparation of seed bed

30%-after seeding and rolling

10%-after second application of fertilizer

20%-at the Substantial Completion, having maintained and watered new lawn to the satisfaction of the Engineer.

Item No.	Item	Pay Unit
PK-ESCR 739	**SEED NEW LAWN**	**S.Y.**

END OF SECTION

SECTION PK-ESCR 740 – HYDROSEEDING

WORK: Under these Items, the Contractor shall furnish standard grass and native grass seeds, prepare soil, to accomplish HYDROSEEDING in accordance with the plans, specifications, and directions of Engineer.

INTENT: This hydroseeding specification is intended to be used for seeding of large areas or hillsides with greater than one thousand one hundred (1,100) square yards of coverage.

MATERIALS: Unless otherwise herein specified, all materials and methods of construction shall comply with the requirements of the NYCDOT Standard Highway Specifications.

Seed Mixtures: Both types of grass seed shall be fresh, recleaned seed of the latest crop mixed in the following proportions by weight and meeting the following standards of pure live seed content. The tolerance for PLS (purity x germination) shall be those listed.

LAWN GRASS SEED				
PERCENTAGE OF HYDROSEED MIXTURE – Proportionally, the LAWN GRASS SEED MIX shall be one half (50%) of the seed mix of the hydroseeding slurry.				
Percent By Wt.	**Grass Seed**	**Purity Seed**	**Germination**	**Maximum Weed**
60%	TALL FESCUE – One or more of the following varieties: Apache II. Arid 3, Cochise III,Coronado Gold, Falcon IV, Justice,Jaguar III, Lancer (SH), Masterpiece, Rebel IV, Rebel Jr.(SH), Rebel Sentry, Rembrandt, Tomahawk E+, or approved equal.	98%	85%	25%
20%	BLUEGRASS - One or more of the following varieties: Able I (SH), Blacksburg, Glade (SH), Moonlight, Midnight, America (SH), Brilliant, Ram (SH), Touchdown (SH), Warren's A-34 (SH), Bristol (SH), Lofts 1757 (SH), or approved equal.	98%	80%	10%
20%	PERENNIAL RYEGRASS - One or more of the following varieties: Brightstar II, Manhattan 4, Citation Fore, Elfkin, or approved equal.	98%	85%	25%

NOTE: The cultivars followed by "(SH)" exhibit better shade tolerance than other varieties, under moderate shade.

Hydromulch: Shall be a wood fiber product colored with a non-toxic water-soluble green dye. It shall contain no germination or growth inhibiting factors. Hydromulch shall be of such consistency as to allow the fiber to be evenly dispersed and suspended when agitated in water. Hydromulch shall be equal to that which is manufactured by Conwed Fibers, Buffalo Grove, IL and Weyerhauser Co., Tacoma, WA, or approved equal. The rate of application shall be one thousand five hundred and thirty pounds (1530 lbs.) per acre, including sixty pounds (60 lbs.) of seed per acre.

Wood Fiber Mulch Binder: Shall be a semiporous film material capable of binding wood fiber mulch and seed to the soil. Wood fiber mulch binder shall be equal to that which is manufactured by Grass Grower, Plainfield, NJ, Trade Name: Terra Jack, or approved equal. The rate of application shall be seventy (70) gallons per acre.

Fertilizer: Shall be bone meal or other product containing a maximum of 0.67% phosphorous chemical fertilizer formula unless a soil test indicates the need for additional phosphorus.

Application of any fertilizer on lawns or non-agricultural turf within 20 feet of a water body or on paved surfaces is restricted and may not be applied unless there is a buffer at least 10 feet wide of planted or naturally occurring vegetation, such as shrubs, trees and plants between the area receiving fertilizer and the water. Fertilizer shall not be applied between December 1 and April 1.

INSTALLATION: Lawn seed shall be sown in the spring during the months of March, April, or May or in August, September, or October or as directed by the Engineer.

Prior to seeding, the area to be seeded shall be disked to loosen top six inches (6") of soil. The disked area shall be fine tilled to open the soil and render it free of rocks, roots, topgrowth, or debris over two inches (2") in greatest dimension. All debris shall be removed from the site. The chain method or another suitable and pre-approved method of cultivation shall be employed to loosen, rough grade, and prepare the seedbed.

Grass seed shall be mixed as per the above schedule. The mixed seed shall be applied at the rate of one and four-tenths pounds (1.4 lbs.) per one thousand square feet (1,000 s.f.) All seeding shall be performed in moderately dry to moist soil conditions at a time when the wind velocity does not exceed five miles per hour (5 mph).

The application of seed, hydromulch, wood fiber binder, and fertilizer shall be by an approved Hydromulcher or Hydroseeder machine with an adequate capacity expediently and the ability to uniformly mix, pump and spray a uniform slurry of the hydroseeding ingredients.

All mixtures shall be constantly agitated from the time they are mixed until they are applied to the seedbed. All seed mixtures in aqueous agitation shall be applied with eight (8) hours after mixing, except for leguminous seed, which shall be applied within one hour after mixing. Seed mixtures not applied within these limits shall be discarded and the Contractor shall receive no payment for the materials. The application shall be a two (2) part procedure:

- Apply seed, and twenty-five percent (25%) of the hydromulch.
- Apply seventy-five percent (75%) of the hydromulch and wood fiber mulch binder, or an alternate method approved by the Engineer.

The seed shall be applied uniformly on a firm, moist seedbed. The seed and fertilizer shall be mixed on site and the seeding shall be performed immediately and without interruption. The mixture shall be applied by means of a high pressure spray which shall be always directed upward so the suspended mixture shall fall like rain in a uniform spray. Nozzles or sprays shall never be directed toward the ground in any way that might produce erosion or runoff.

Particular care shall be exercised to ensure that the application is made uniformly and at the prescribed rate, guarding against missed areas and overlaps. The rate of application may be checked by observing the degree of wetting of the ground or by distributing test sheets of paper or collecting containers over the area at intervals and observing the quality of material deposited. The spray method shall not be used during periods of high winds, which prohibit satisfactory spray patterns.

Staged Seeding Operations: In order to minimize erosion of areas where grading is complete, the Contractor shall stage the application of groundcover hydromulching to coincide with completed construction work. Inspection and acceptance shall be provided for areas in which approved growth is achieved.

MAINTENANCE: The Contractor shall perform all work required to achieve rapidly established growth. The Contractor may be directed to reseed any areas which, in the opinion the Engineer, are unacceptable. The Contractor shall adequately maintain the erosion control cover, including watering as necessary. The Contractor shall maintain all seeded areas until Substantial Completion. The Contractor shall properly water as required to maintain optimum growing conditions for the new stand of grass until Substantial Completion. Where water is supplied from City hydrants, the Contractor shall obtain a hydrant permit from the Department of Environmental Protection. The Contractor is responsible for keeping the permits current. The permits are available from each borough office. To obtain a permit, the Contractor should bring a copy of their contract with a general description of the hydrant location(s) they propose to access. The addresses of borough offices are:

Manhattan: 1250 Broadway (8th floor)

Brooklyn: 250 Livingston St. (8th floor)

Bronx: 1932 Arthur Avenue (6th floor)

Queens: 96-05 Horace Harding Ex., Corona

Staten Island: 60 Bay St (6th floor)

If water is not available from NYC sources, the Contractor is responsible for supplying water from their own source.

In absence of adequate rainfall, watering shall be performed daily or as often as necessary and in sufficient quantities to maintain moist soil to a depth of at least four (4") inches. Watering shall be done during the heat of the day to prevent wilting.

If the growth is inadequate for erosion control, the Contractor shall overseed and fertilize using half the rate of seed originally applied. If the grass and meadow seed growth is over sixty percent (60%) damaged, reseed following the originally specified rate.

SUBMITTALS: All submittals shall be in accordance with the requirements of the S-Pages.

Catalogue Cuts: Contractor shall submit manufacturer’s product literature for the hydromulch and wood fiber mulch binder for approval.

Seed Mix: The Contractor shall submit a document from the seed source for approval prior to delivery showing the seed composition and percentages of each grass type proposed. At Contractor’s discretion, sod may be proposed in lieu of seed at no additional cost to the City. Where approved, grades must be set one (1”) inch lower to accommodate thickness of sod, all other provisions of this specification remain identical.

Amendments: The Contractor shall submit proposed soil amendments for approval prior to delivery.

MEASUREMENT AND PAYMENT: The quantity **of HYDROSEEDING** to be paid for under this Item shall be the area planted, measured in **SQUARE YARDS**, in accordance with the plans, specifications, and directions of the Engineer.

The price bid shall be a unit price per **SQUARE YARD** of area of seed furnished and installed, including the cost of labor, material and equipment, including discing and bed preparation, debris removal, seed mixtures, hydromulch, wood fiber binder, fertilizer, reseeding, watering, maintenance, and all related incidental work, all in accordance with the plans, specifications, and the directions of the Engineer.

The price of water, regardless of the source, shall be considered part of the bid price.

Item No.	Item	Pay Unit
PK-ESCR 740	HYDROSEEDING	S.Y.

END OF SECTION

SECTION PK-ESCR 741 – PLANT STREET TREE

WORK: Under this Item, the Contractor shall perform all work necessary to **PLANT STREET TREE, 2 1/2-3" CALIPER**, in accordance with the plans, specifications, and directions of the Engineer. This Item is not intended for use with the Structural Soil Item; the Tree Item shall be used for planting in the Structural Soil.

Work shall include removal of existing dead trees and stumps in the designated planting pit up to 6" cal., excavation, furnishing, mixing, and incorporating topsoil, manure, mycorrhizal inoculant, and fertilizer tablets in the backfill of all tree pits, furnishing, planting, maintaining, and replacing new trees of the type and size designated on the lists, furnishing and installing tree stakes, and all incidental work shall be completed under this Item.

The Contractor shall be liable for any damage to property caused by planting operations and related work, and all areas and construction disturbed shall be restored to their original conditions, to the satisfaction of the Engineer.

ASIAN LONGHORNED BEETLE QUARANTINE ZONE REGULATIONS: Due to current Federal, State and NYC DPR policy, the following host species may not be planted in the quarantine zone. Host species are as follows: Acer-Maple, Aesculus-Horsechestnut/Buckeye, Salix-Willow, Betula-Birch, Populus-Poplar, Ulmus-Elm, Albiza-Mimosa/Silk Tree, CeltisHackberry, Fraxinus-Ash, Platanus-London Planetree,Sycamore, Sorbus-Mountain Ash.

In addition, Nurseries located within the quarantine zone shall comply with State and Federal Law and all Contractors and/or Subcontractors shall be Certified by the New York State Department of Agriculture and Markets to perform work within the Quarantine Zone (see Submittals section below).

TREE:

Names: Plant names, size, and grading standards shall conform to those prepared by the American Association of Nurserymen Horticultural Standards, 1995 Edition, unless otherwise specified. No substitution shall be permitted except by written permission of the Engineer.

Quality: All trees shall be typical of their species or variety. They shall have normal well developed branches and vigorous fibrous root systems. They shall be sound, healthy, vigorous trees, free from defects, disfiguring knots, sunscald injuries, abrasions of the bark, plant diseases, insect eggs, borers, and all forms of infestation. All trees shall be tagged by the Engineer, who shall reject all trees not meeting the above specifications, and trees having damaged or missing leaders, multiple leaders, Y-crotches, or indications of topping or heading back. All trees shall be nursery grown and shall have been growing under the same climatic conditions as the location of this project for at least two (2) years prior to date of contract. Trees held in storage will be rejected if they show signs of growth during storage.

Dimensions: Each tree shall be dimensioned as it stands in its natural position. Stock furnished shall be a fair average of the minimum and maximum sizes specified

PREPARATION OF TREES: All precautions customary in good trade practice shall be taken in preparing trees for moving, and workmanship that fails to meet the highest standards will be rejected. All trees shall be dug immediately before moving, unless otherwise specified. All trees shall be dug to retain as many fibrous roots as possible. Balled and burlapped trees shall have a solid ball of earth of the minimum specified size, securely held in place by burlap and stout rope

or twine. Oversize or exceptionally heavy trees are acceptable if the size of the ball or spread of roots is proportionally increased, to the satisfaction of the Engineer. Loose, broken, or manufactured balls will be rejected.

BACKFILL: Material shall consist of natural loam topsoil with the addition of humus only, and no other soil type, such as a sand or clay soil type, shall be accepted. Topsoil must be free from subsoil, obtained from an area which has never been stripped. It shall be removed to a depth of one (1) foot, or less if subsoil is encountered. Topsoil shall be of uniform quality, free from hard clods, stiff clay, hardpan, sods, partially disintegrated stone, lime, cement, ashes, slag, concrete, tar residues, tarred paper, boards, chips, sticks or any other undesirable material. If a truck load of topsoil is considered by the Engineer to contain too much undesirable material to be corrected on the site, the entire truck load shall be rejected. No topsoil shall be delivered in a frozen or muddy condition.

Topsoil shall comply with the following requirements:

CHEMICAL AND PHYSICAL COMPOSITION: Natural loam with the addition of humus shall comply with the following requirements:

a. Organic Matter--must be between nine (9) and twelve (12) percent by weight, as determined by the Dry Combustion Method for Total Carbon and Organic Carbon (using a multiplying factor of 2) as described in Methods of Soil Analysis, #9, Part 2, 2nd ed. published by the American Society of Agronomy. The organic content shall not exceed fourteen percent (14%).

b. pH range--shall be 6.0 to 7.0 inclusive.

c. Sieve Analysis -- By Wash Test, ASTM Designation C-117. Passing 2" sieve 100% Passing 1" sieve 95% to 100% Passing #4 sieve 90% to 100% Passing #100 sieve 30% to 60%

d. Clay--the test method to measure the clay content of the soil shall be ASTM D 422. The Engineer reserves the right to reject topsoil in which more than 60% of the material passing the No. 100 U.S.S. Mesh sieve consists of clay as determined by the Buoyoucous Hydrometer or by the decantation method. All percentages are to be based on dry weight of sample.

When the topsoil otherwise complies with the requirements of the specification but shows a deficiency of not more than one (1) percent in organic matter, it may be incorporated when and as permitted by the Engineer.

Electrical Conductivity shall be less than 1500 mhos/cm. A higher level would indicate excessive salt content. The testing method must be the saturated paste method.

The Contractor shall at the direction and discretion of the Engineer furnish a certified report of an approved analytical chemist showing the analysis of representative samples of the topsoil which he proposes to use. All samples are to be taken by and delivered to the laboratory by the Engineer; the price bid shall include inspection and laboratory charges. No topsoil shall be delivered until the approval of samples by the Engineer, but such approval shall not constitute acceptance. The Engineer reserves the right to reject on or after delivery any materials which do not, in the Engineer's opinion, meet these specifications and resample. Sampling procedure shall be explained in detail at the preconstruction meeting. If the Engineer directs, topsoil which varies only slightly from the specifications may be made acceptable by such corrections as the Engineer deems necessary.

Mycorrhizal Fungi Inoculant: Shall be applied by means of a three ounce (3 oz.) premeasured dry formulation packet, such as Mycor Tree Saver Transplant®, as manufactured by Plant Health Care, Inc., Pittsburgh, PA, or approved equal. Packets shall contain, as a minimum: one thousand (1000) live spores of Vesicular-Arbuscular fungi, including: Entrephosphora columbiana, Glomus clarum, Glomus etunicatum, and Glomus sp.; seventeen million five hundred thousand (17,500,000) live spores of Ectomycorrhizal fungi, including: Pisolithus tinctorius; biostimulants including Yucca schidigera extract; soluble sea kelp extract derived from Ascophylum nodosum; humic acids; and acrylamide copolymer gel as a water absorbent medium. Three (3) three ounce (3 oz.) packets shall be added to the top six to eight inches (6-8") of backfill soil added to each pit and thoroughly mixed to distribute the inoculant.

Water Retention Additive: Water Retention Additives shall be a granular polyacrylamide polymer of a potassium base and not a sodium base that slowly releases moisture into the root zone such as Terra Sorb, as manufactured by Plant Health Care, Inc., Pittsburgh, Pa., or approved equal. It shall be applied at the time of planting during a dry planting as defined by Parks and Recreation. Each tree shall receive three (3) ounces or amount specified by product instructions. Half should be added at a depth of 8-10 inches and the other half just below the finished surface.

Delivery: Trees shall be packed, transported, and handled with utmost care to ensure adequate protection against injury. When transported in closed vehicles, plants shall receive adequate ventilation to prevent sweating. When transported in open vehicles, plants shall be protected by tarpaulins or other suitable cover material. Balled and burlapped trees shall be set on the ground and balls covered with soil. Until planted, all materials shall be properly maintained and kept adequately moist, to the satisfaction of the Engineer.

Inspection: Inspection may be made before digging, if the Engineer directs, but no trees shall be planted by the Contractor until inspected by the Engineer at the site of the work. All rejected trees shall be immediately removed from the site and replaced with acceptable material at no additional cost.

PLANT LIST:

Abbreviations:

Dia. - Indicates the CALIPER of the trunk of the tree.

B & B - Indicates tree to be balled and burlapped.

Ginko biloba - 2 1/2" -3" Dia. B & B 30" branched 6-7' from ground. Average height 11' - 13' Should have single, straight trunks with leader intact, symmetrical well branched tops.. Fibrous root system essential. Spread of 4'-5'.

Platanus x acerifolia - 2 1/2" -3" Dia. B & B 30". Branched 6'-7' from ground. Average height 12'-14'. Should have single, straight trunks with leader intact, symmetrical well branched tops. No limb cuts over 3/4" which have not completely calloused over. Heavy fibrous root system essential. No cut back trees.

Sophora japonica - 2 1/2" -3" Dia. B & B 30" branched 6-7' from ground. Average height 11'-13' branched tops. Fibrous root system essential. Spread of 4'-5'.

SITE SPECIFICATIONS:

Time of Planting: Unless otherwise directed by the Engineer, deciduous trees shall be planted from March 1st to May 1st, and from October 15th to December 15th.

Location: Site characteristics, such as overhead power lines, existing vegetation, and infrastructure items, such as curbs and sidewalks, shall be considered. Trees that grow taller than thirty feet (30') should not be planted directly under power lines. When the design allows, the tree leader shall be offset from power lines.

Excavation of Tree Pits: Sizes of tree pits shall be as shown on the Planting Plan. When subsurface obstructions are encountered during excavation, the Contractor shall restore the disturbed area to its original condition. Each tree shall be planted in an individual pit as specified. Pits shall be dug three (3) times the size of the root ball in Caliper and only deep enough so that the root ball sits on undisturbed subgrade, except in situations where curbs and/or adjacent pavements prevent achievement of planting pit dimensions. Sizes of restricted planting pits (i.e. street trees) shall be at the maximum width allowed, and the same depth as the root ball being planted. Any changes in the planting pit sizes shall be broad enough to accommodate the roots fully extended and only deep enough so that the uppermost roots will be just below the original grade. No tree pits shall be dug until the proposed locations have been staked on site by the Contractor and approved by the Engineer. No tree pits shall be backfilled until approved by the Engineer. All tree pits shall have vertical sides, unless otherwise directed. Excavated material shall be removed from the site unless the Engineer determines the material is suitable for backfilling. Any amendment will be as directed and determined by the Engineer.

Extreme care shall be taken not to excavate to a depth greater than required. The subgrade below the root ball shall be tamped slightly to prevent settlement. Where, in the opinion of the Engineer, the subgrade material is unsuitable, the size of the tree pits shall be dug one-half (1/2) wider than normally required. The bottom and sides of the pit shall be backfilled with existing topsoil thoroughly worked into place.

PLANTING: No planting shall be done, except in the presence of the Engineer. All material shall be inspected by the Engineer as it is being removed from the truck, prior to placing in an approved storage area or the designated planting site. All rejected material shall be removed from the site and replaced with acceptable material at no cost to the City.

Place balled and burlapped material in the prepared planting pit by lifting, and carry it by the rootball. Set the tree straight and in the center of the pit, with the most desirable side facing the predominant view. All trees shall set, after settlement, at the same level at which they have grown in the nursery, with the root flare exposed. Care shall be exercised in setting the trees plumb. All ropes, stones, etc. shall be removed from the pit before backfilling. The backfilling mixture shall be loose and friable, and not frozen or solid.

Cut and remove rope or wire from the top fifty percent (50%) of the rootball and cut and remove the burlap to the edge of the ball. Remove as much woven product and twine as possible. All plastic or synthetic fabric must be removed from the ball at the time of planting. Any wire basket enclosed root ball will need to have at least 2/3 of the wire basket cut away from the sides and top of the ball, and removed from the site. Remaining lateral wires must be cut to prevent future root interference. Wire must not be galvanized or aluminum wire.

Trees shall be handled so that the ball will not be loosened. After the soil has been thoroughly firmed under and around the ball, the burlap shall be cut away from the upper half of the ball, and the remaining burlap adjusted to prevent the formation of air pockets. Where directed by the Engineer, the burlap shall be entirely removed. Soil shall be firmed at six (6") to eight inch (8") intervals and thoroughly settled with water.

All ropes, stones, etc. shall be removed from the pit before backfilling. Soil for backfilling shall be loose, friable, and not frozen. Trees shall be handled so that the ball will not be loosened.

FINISHING SURFACE AFTER BACKFILLING: The Contractor shall cultivate and rake over finished planting areas and shall leave them in an orderly condition. On level ground or slight slopes a shallow basin a little larger than the CALIPER of the tree pit shall be left around each tree, as shown on the details, or as directed by the Engineer. After the shallow basins have been prepared, they shall be mulched three to four inches (3" – 4") deep. Mulch shall consist of shredded wood or bark not exceeding three inches (3") in length and one inch (1") in width. Mulch with leaves, twigs, and/or debris shall not be acceptable. Mulch for tree pits shall be included in the bid price.

STAKING: All staking shall be done immediately after planting and all stakes and wire shall be maintained. Plants shall stand plumb after staking. Stakes shall be of white cedar with bark attached. They may have a maximum allowable deflection of ten percent (10%). Stakes of the dimensions shown on the plans and details shall be placed outside the root ball and shall be driven to the depths indicated on the plans and details.

Stakes shall be fastened to the tree with double No. 12 gauge annealed galvanized steel wire run through a suitable length (at least twelve (12") inches) of new reinforced one-half inch (1/2") rubber hose or with a suitable length of ¾" wide, flat, woven polypropylene material as manufactured by DeepRoot, San Francisco, CA or approved equal, that is knotted and nailed to the stakes with 1" galvanized roofing nails as directed by the Engineer. Stakes shall be set parallel to the curbs, unless otherwise directed by the Engineer. The length of doubled wire between the tree and stakes shall be hand twisted several times prior to fastening to the stakes. The wires shall be tied off firmly at the stake, not crank twisted at the center. Trees shall stand plumb after staking. Stakes, wires and hoses shall be removed at the end of the one year guarantee period, unless directed otherwise by the Engineer. At the time the stakes are removed any holes left by the stake shall be filled with topsoil as specified in the specification PK-ESCR 753.

PRUNING: Broken or badly bruised branches shall be removed with a clean cut. Do not cut leaders or use wound paint or dressing to treat cut areas. Crossed branches shall be pruned with a sharp tool in such a manner as to preserve and encourage the plants natural growth form. Crowns of young trees shall not be cut back to compensate for root loss.

MAINTENANCE: At the time of planting, the soil around each tree shall be thoroughly saturated with at least twenty (20) gallons of water.

Water for the irrigation of the planted trees in this contract may be supplied by the Department of Environmental Protection free of charge, until Substantial Completion. In any event, the Contractor shall furnish and apply water, in accordance with the provisions of this contract.

Where water is supplied from City hydrants, the Contractor shall obtain a hydrant permit from the Department of Environmental Protection.

The Contractor shall maintain all planted trees within the limits of this contract, in accordance with the plans, specifications, and directions of the Engineer, until the acceptance and completion of each site of this contract.

Maintenance shall include weeding, cultivating, edging, control of insects, fungus, and other diseases by means of spraying with an approved insecticide or fungicide, pruning, adjustment and repair of stakes, anchors and wires, repair of minor washouts and gullies up to twelve inches (12") in depth, and other horticultural operations necessary for the proper growth of all trees, and

for keeping the entire area within the contract limits neat in appearance until the Substantial Completion.

All planting areas shall be cultivated and weeded with hoes or other approved tools within the period from May 1st to October 1st, and such cultivating and weeding shall be repeated at least once a week. Under no conditions shall weeds be allowed to attain more than six inches (6") of growth. The cost of maintenance shall be included in the bid price.

REPLACEMENT: The Contractor shall replace, in accordance with the contract plans and specifications, any Tree that is dead or, in the opinion of the Engineer, in an unhealthy or unsightly condition, and/or have lost their natural shape due to dead branches, excessive pruning, inadequate or improper maintenance, or other causes, including vandalism, prior to final acceptance. Replacement plants must be installed in the next planting season. The cost of replacements(s) shall be included in the unit price bid for the various furnished items of the contract. Where vandalism or related causes are agreed by the Engineer as the cause for tree replacement, the Contractor shall be responsible for *one* replacement during the one-year guarantee period after Substancial Completion.

Where dead tree has been identified, whether due to natural causes or vandalism, the Contractor shall remove the dead material, including stakes, and wire (if applicable) **within three (3) weeks of notification.**

Where dead tree has been identified, whether due to natural causes or vandalism, the Contractor shall remove the dead Tree, including stakes, burlap, and wire. Earth will be leveled and new topsoil and seed, or appropriate paving material, added at the direction of the Engineer to eliminate any hazardous conditions.

The Contractor shall maintain Replaced Tree to the standards outlined in the “Maintenance” section above.

SUBMITTALS: All submittals shall be as per the S-Pages. The contractor shall submit the following for review and approval prior to performing work:

State Certification (in quarantine zone only): The contractor must submit a copy of a valid Compliance Agreement issued by the State of New York Department of Agriculture and Markets, Division of Plant Industry.

MEASUREMENT AND PAYMENT: The quantity of **TREES, 2-1/2" - 3" CALIPER.** to be paid for under this Item shall be the number of trees of each size and species, supplied, planted, and maintained, in accordance with details and specifications, to the satisfaction of the Engineer

The price bid shall be a unit price for **EACH** tree of each size and species planted, and shall include the cost of excavating plant pits, furnishing and incorporating topsoil and manure in backfill of all tree pits, removal of dead stumps and trees up to six inches (6") Caliper in designated pits, furnishing, planting, pruning, staking, watering, maintaining, and replacing all trees, and all other work incidental thereto, including mycorrhizal fungi inoculant, and water retention additives, in accordance with the sketches, specifications, and to the satisfaction of the Engineer.

The price of water, regardless of source, is deemed included in the unit price bid. No extra payment will be made for water obtained from the Contractor's own source.

Item No.	Item	Pay Unit
PK-ESCR 741	PLANT STREET TREE	EA

END OF SECTION

SECTION PK-ESCR 742 – RESILIENT SPORTS SURFACE – 13MM

WORK: Under this item, the Contractor shall furnish and install RESILIENT SPORTS SURFACE -13 mm a sandwich style polyurethane track system, water impermeable, resilient, all weather resilient sports surface where shown on the plans and specifications and directions of the Engineer.

MATERIALS: Unless otherwise provided for herein, all materials shall comply with the requirements of the NYCDOT Standard Highway Specifications.

Sports Surfacing: shall be a two-layer sandwich style polyurethane track system. Track system shall be similar to Beynon BSS-300 as manufactured by Beynon Sports Surfacing Co., Spurtan BV, as manufactured by Advanced Polymer Technology Corp., Harmony, PA, Conipur SW as manufactured by Conica Sports Flooring, Elgin, SC, or approved equal. Sports surfacing shall conform to the following standards:

1. Minimum thickness: 13mm
2. Base Layer: black mat consisting of recycled SBR rubber granules bound in polyurethane binder-minimum 9 mm thick.
3. Second Layer: liquid applied two-component pore filling seal coat using polyurethane and EPDM powdered rubber-minimum 4 mm thick.
4. Surface Layer: liquid applied polyurethane self-leveling flood coating into which colored EPDM rubber granules are cast (embedded) and allowed to cure.
5. Colors: Red
6. Sports surfacing material shall conform to the following properties:

Physical Properties	Standard	Specification
Hardness - Shore A, @ 70° F	ASTM D2240	Top 60 ± 5 bottom 50 ± 5
Tensile Strength	ASTM D412 / IAAF test	>100 psi
Elongation at Break	ASTM D412 / IAAF test	>50%
Coefficient of Friction (wet)	IAAF	>0.50
Force reduction	Din 180383/2	Min 35%
VOC Compliance	ASTM D5116	

7. Resilient surfacing material shall exhibit a high resistance to track shoe spike traffic, cigarette burns and chemical agents.
8. Material for all cracks and patching shall be an approved material compatible with the specified surfacing. Specified material shall be per the manufacturer's specification.

Crack Filler and Patching Material: Material for all cracks and patching, if necessary, shall be an approved material compatible with the specified surfacing.

Line & Text Markings: Line & Text paint shall be supplied or approved by the sport surface manufacturer. Paint for lines and text shall be a two-component solvent based polyurethane line paint, such as “Qualipur 7600” as manufactured by Advanced Polymer Technology, Harmony, PA, or approved equal.

CODES AND STANDARDS: The Contractor shall follow the current guidelines as set forth by the American Sports Building Association (ASBA).

QUALITY ASSURANCE: The Entity who will perform the installation work shall have a minimum of three (3) years experience working on projects similar to the work specified herein, including building various athletic facilities. The Entity must submit for approval two (2) examples of similar type work completed within the last five (5) years and a minimum of two (2) verifiable references from past clients. The resilient surface shall be installed by authorized applicators of the approved manufacturer.

INSTALLATION: Before the resilient sports surface is placed, the asphalt surface shall be checked for suitability to receive resilient surface by the sports surface contractor and the Engineer. The asphalt surface shall be allowed to cure completely.

At least thirty (30) days shall have elapsed between completion of the asphalt surface and commencement of the resilient sports surface. If no rain has fallen since completion of the asphalt, the Contractor shall provide for the asphalt to be well hosed down with water not less than 2 days before such surfacing begins. In order to allow the asphalt base to fully cure before installing the resilient sports surface, full depth asphalt pavement or asphalt concrete top course pavement shall not be placed after August 15th without written permission from the City.

The resilient sports surface shall be laid on new or existing asphalt surface that is dry, clean and free from existing track surface and contamination by oils, dust, organic matter or chemical agents. If the surface is not satisfactorily cleaned, the Contractor shall continue cleaning until it is acceptable by the Engineer.

The asphalt surface shall be smooth, level, structurally sound, firm, true to line and grade, free from unevenness and other defects. The asphalt surface shall be maintained in this condition until the installation of the resilient surface is satisfactorily completed.

Accurate control over the entire installation of the resilient sports surface shall be maintained. This includes, but not limited to, mixture ratios, temperature range, humidity, laying, thickness and gradients. The resilient sport surface shall be allowed cure for a minimum duration of 7 days.

The surface shall be protected before, during and after installation until project's acceptance by the Engineer. The installation shall be performed in a first class, neat, careful and professional manner by workmen skilled in this type of work.

Adjacent and Concurrent Construction: Installation shall not take place until the completion of adjacent or concurrent construction operations which generate dust, airborne abrasives, or any other by-product that, in the opinion of the Engineer, would be harmful to the resilient sports surfacing.

TEMPERATURE AND WEATHER: Installation of the sports surfacing shall proceed only when temperature is at least sixty five degrees Fahrenheit (65 °F) and rising. Work shall not proceed when ice, frost or dampness is visible on the surface or when rain is imminent. Perform work when the surfaces are completely dry and will remain so until completion.

LINE & TEXT MARKINGS: General markings shall be spray applied, using only paint, primers and finishes supplied and guaranteed by the approved manufacturer and/or supplier.

All markings shall be spray applied under the direction of a qualified line marker, having marked a minimum of 5 athletic facilities, of similar size and scope. The line marker shall be approved by resilient surfacing manufacturer and experienced in the layout of athletic markings. Apply not less than 2 coats of paint, 2 inches wide for line work. Text shall receive not less than 2 coats of paint in patterns as indicated on approved shop drawings.

Line and text markings shall not be performed when the temperatures of the substrate is below 50 degrees °F, nor above 104 degrees °F.

TESTING: The City reserves the right to make any and all tests it may deem necessary to determine the physical properties, thickness and quality of the materials installed.

The City reserves the right to request that the Contractor take up to three (3) randomly selected cores of sports surfacing (minimum 1' diameter) as directed by the Engineer. All work including restoration of surface shall be included in the unit price bid for resilient sports surface. The Contractor shall supply all necessary labor and materials at the direction of the Engineer.

DEFECTIVE SPORTS SURFACING: In the event that portions of the completed sports surface or samples taken do not comply with the requirements of the Specifications, the Engineer shall order those affected areas to be taken up, removed and replaced with suitable materials, properly applied, leveled and incorporated in full compliance with the Plans and Specifications at no additional cost to the City. Insufficient thickness will only be remedied by cutting out to the asphalt, making the same good, and replacing with full depth material to the specified depth. Any correction ordered whatsoever will be made without additional expense to the City.

OSHA REGULATIONS: In compliance with OSHA regulations, the Contractor shall provide the Contractor's workers with approved equipment including protective clothing and/or respirators whenever the possibility of exposure to hazardous materials or vapor exists.

PROTECTIONS: The Contractor shall protect adjacent surfaces from drips, smears, splatter or other contamination by suitable taping or masking. All such marred surfaces shall be restored to a condition similar to and equally as good as that existing at the time of commencement of the work hereunder to the satisfaction of the Engineer by and at the expense of the Contractor.

CLEAN-UP: At the completion of the work, the Contractor shall remove accumulated debris, tools, protective coverings, equipment, containers, residual materials, etc., from the site in an approved manner, and the entire job left broom clean and acceptable.

SUBMITTALS: All submittals shall be in accordance with the requirements of the S-Pages. The Contractor shall submit the following for review and approval prior to manufacture.

The following must be provided by the Contractor:

1. The resilient sports surface contractor shall show proof of experience in the installation of resilient sports surfacing, using the same product as specified in this contract. The Contractor shall submit a list containing a minimum of two athletic facilities that meet these requirements, constructed within the past five years along with the names of people to contact for reference.
2. Control samples of the proposed material for independent testing and use as a standard

for the site work. Samples shall be 12” x 12”.

These samples should be representative of the composition, strength and texture of the material to be installed on site and will be subjected to independent testing to establish a datum performance for site quality control purposes. 3. The following additional information must be approved prior to installation:

i. General statement of the method, by which the proposed surface is constructed, including method of site preparation and chief items of equipment used.

ii. Statement of method by which small repairs or retexturing is achieved.

iii. Specimen set of maintenance instructions for the resilient sports surface.

iv. Statement of any safety precautions required by workers or bystanders at the site during the work.

v. Submit the following test data for the product as purchased:

a. Hardness Shore A -ASTM D2240

b. Tensile Strength –ASTM D412./IAAF test

c. Elongation at break – ASTM D412/IAAF test

d. Coefficient of Friction (wet) -IAAF test

e. V.O.C. Compliance -ASTM D5116

Shop Drawings: The contractor shall submit shop drawings showing all line markings and layout of the running track.

Warranty: The Contractor shall submit standard Manufacturer’s Warranty for five (5) years on the resilient sports surfacing and one (1) year on the line markings and all other work. Warranty shall start with the date of the use inspection.

MEASUREMENT AND PAYMENT: The quantity of RESILIENT SPORTS SURFACE -13mm to be paid for under this item shall be the number SQUARE FEET furnished and installed in accordance with the plans, specifications and direction of the Engineer, including line & text markings.

The price bid for this item shall be the number of SQUARE FEET of RESILIENT SPORTS SURFACE -13mm furnished and installed and shall include the cost of all labor, materials, equipment and incidentals necessary to complete the work including the adhesive, any patching necessary, line striping and testing, all in accordance with the plans and specifications to the satisfaction of the Engineer

All samples and restoration shall be included in the price bid.

Full Depth Asphalt Pavement, Asphalt Pavement Top Course, and Survey Track Lines shall be paid for under their respective items.

Item No.	Item	Pay Unit
PK-ESCR 742	RESILIENT SPORTS SURFACE - 13 mm	SF

END OF SECTION

SECTION PK-ESCR 743 – 6TH STREET TRACK AND FIELD

PK-ESCR 743.1. INTENT

This section includes the following items: **LONG JUMP LANDING AND PIT**, **TRACK PERIMETER DRAIN**, **SURVEY TRACK LINES**, and **POLE VAULT PIT AND COVER** all in accordance with the plans, specifications and directions of the Engineer.

PK-ESCR 743.2. DESCRIPTION

A. Under this item, the Contractor shall construct and install a **LONG JUMP LANDING AND PIT**, in accordance with the plans, specifications and directions of the Engineer.

B. Under this Item, the Contractor shall furnish and install **TRACK PERIMETER DRAIN,** including the channel drain, grates, edges, in-line catch basins with trash, buckets end plates, cleanouts, corrugated plastic pipe, connection to existing drainage system, and accessories necessary to complete the work, all in accordance with the plans and specifications and directions of the Engineer.

C. **SURVEY TRACK LINES:** Under this item, the Contractor shall hire a New York State Licensed Land Surveyor to check surface tolerances for each layer of pavement which include: the compacted subgrade, asphalt binder course, and finished asphalt top course, set calibration points for lane marking of the running track and field events and furnish an "as built" drawing for the work all in accordance with the plans and specifications and directions of the Engineer.

D. Under this item, the Contractor shall furnish and install **POLE VAULT PIT AND COVER** in accordance with the plans, specifications and directions of the Engineer.

PK-ESCR 743.3. MATERIALS

A. Long Jump Landing and Pit Materials

a. Broken Stone Base: Broken stone shall consist solely of crushed ledge rock. Stone shall be No. 3 size and shall be of approved size and quality.

b. Perforated Polyethylene Pipe: Pipe and fittings shall be manufactured by Advanced Drainage Systems, Inc. (ADS) Staybrook Industrial Area, Ludlow, MA, or approved equal. Sizes 4 – 36 inch (N-12) shall have a full circular cross-section, with an outer corrugated pipe wall and an essentially smooth inner wall (waterway). Corrugations for these sizes may be either annular or spiral. All sizes shall conform to the AASHTO classification “Type S” (smooth waterway) or "Type SP" (smooth waterway and Class 2 perforations) as specified.

i. Pipe manufactured for this specification shall comply with the requirements for test methods, dimensions, and markings found in AASHTO Designations M252 and M294. Pipe and fittings shall be made from Virgin PE compounds which conform with the requirements of cell Class 324420C as defined and described in ASTM D3350.

ii. The minimum parallel plate stiffness values when tested in accordance with ASTM D2412 shall be as follows:

Diameter	Pipe Stiffness
4" (100 mm)	50 psi (340 kPa)
6" (150mm)	50 psi (340 kPa)
8" (200mm)	50 psi (340 kPa)
12" (300mm)	50 psi (340 kPa)
18" (450 mm)	40 psi (280 kPa)

24” (600 mm)	34 psi (235 kPa)
36” (900 mm)	22 psi (150 kPa)

c. Sock: The circular perforated pipe shall have a "DC Sock", a polyester machine knitted envelope factory applied and ready for installation. Sock not required for the slim line drainage system.

d. Fittings: The fittings shall not reduce or impair the overall integrity or function of the pipeline. Fittings may be either molded or fabricated. Common corrugated fittings include in-line joint fittings, such as couplers and reducers, and branch or complimentary assembly fittings such as tees, wyes, and end caps. These fittings may be installed by various methods, such as snap-on, screw-on, bell and spigot, and wrap around. Couplings shall provide sufficient longitudinal strength to preserve pipe alignment and prevent separation at the joints. Coupling of the pipes shall be performed using Standard ADS (Advanced Drainage Systems) N-12 split coupler PRO LINK ST, or PRO LINK 10.8, or PRO LINK 5. Only fittings supplied or recommended by the pipe manufacturer shall be used. Where designated on the plans, a neoprene or rubber gasket shall be supplied.

e. Geotextile – Drainage: Geotextile to conform to the requirements of specification section PK-ESCR 149, Bid Item No. PK-ESCR 149.

f. Concrete: Concrete to conform to the requirements of specification section ESCR-4.06.

g. Steel Bar Reinforcement: Reinforcement to conform to the requirements of specification section ESCR-4.14.

h. Expansion Joint: Expansion joint material to conform to the requirements of specification section ESCR-4.06.

i. Bond Breaker: Bond Breaker to conform to the requirements of specification section ESCR-4.06.

j. Sealant: Sealant to conform to the requirements in specification section ESCR-4.06.

k. Permeable Pavers: Pavers shall be manufactured from high quality, steam cured, pre-cast concrete having a minimum compressive strength of 7,500 p.s.i. and a maximum water absorption of five (5%) percent. All pavers shall be as indicated on the plans or approved equal. All pavers used shall be of the same thickness and manufacturer.

l. Sand: Sand shall be masonry sand as defined by ASTM C144. Masonry sand shall consist of natural sand or manufactured sand and shall be free from all deleterious and organic material.

m. Aluminum Pit Cover: Aluminum pit cover shall be “APC Panel” as manufactured by Aluminum Athletic Equipment Co., Royersford, PA, or approved equal. Panels shall be custom fabricated as necessary to securely fit the actual dimensions of the landing pit. Aluminum Pit Cover shall consist of a series of aluminum planks welded together and framed with an aluminum angle. Panels shall have four (4) recessed lifting handles and shall be recessed to receive track surface as per the specified thickness. Covers shall sit in a ledge formed into the concrete curb as shown in the shop drawings so that the top of the rubber athletic surface is flush to the top of curb. Contractor shall provide approved manufacturer with as-built drawing of curb measurements for proper fabrication.

n. Auxiliary Panel Support Beams: If required, shall be “Auxiliary Support Beams for “APC Panels” as manufactured by Aluminum Athletic Equipment Co., Royersford, PA, or approved equal. The aluminum support beams consist of one (1) primary support beam running the length of the pit interior set into two (2) long beam receptacles set so the top of the beam is flush to the bottom of the panels, and one

(1) secondary support beam running the width of the pit interior set into two (2) short beam receptacles set so that the top of the short beam is flush to the bottom of the long beam. Beams shall be custom fabricated as necessary to securely fit the actual dimensions of the landing pit. Contractor shall provide approved manufacturer with as-built drawing of curb measurements for proper fabrication.

B. Track Perimeter Drain Materials:

a. Concrete: Concrete as per manufacturer and to conform to the requirements of specification section ESCR-4.06.

b. Fibrous Reinforcement: Fibrous reinforcement shall be 100% virgin polypropylene fibrillated fibers containing no reprocessed olefin materials and specifically manufactured to an optimum gradation for use as concrete secondary reinforcement. Volume per cubic yard shall be a minimum of 0.1% (1.5 pounds). Fibrous reinforcement shall be Fibermesh™ with Microban™ 'B', an antibacterial additive. Fibrous reinforcement shall be manufactured by Fibermesh Company, Chattanooga, TN, or approved equal. Microban™ 'B' shall be manufactured by Microban International Ltd., New York, NY. Fibers shall have been fully tested by Underwriter's Laboratory (UL) and listed in the UL directory. Fibers shall have been evaluated by ICBO, CABO, and SBCCI. Fibers shall be manufactured by extrusion. Individual fibers shall not have been produced by slitting or chopping of sheet material, or any other process. Fibers shall be stored in sealed bags or other containers until use.

c. Channel Drain – System: Modular trench drain system pre-cast from corrosion resistant polyester resin polymer concrete, including interlocking modular components for on-site installation. System shall include all trench drains, including radial sections, drainage and anchoring covers, and accessories. The Channel Drain System shall be a grate "U" shaped channel system No. 2000, as manufactured by ACO Sport, Chardon, Ohio or approved equal. Components for the channel drain sports system, as manufactured by ACO Sports or approved equal:

   i. Channel: Channel shall consist of straight and curved fabricated segments of polymer concrete, formed with interlocking tongue and groove connections, which can be sealed to provide watertight connections. It shall be 6.1" wide with an internal width of 4" and 9.8" deep with radius non-sloping bottom having the following attributes:
      1. Length: 1m (39.37")
      2. Anchoring ribs: full length
      3. Longitudinal evacuation slot: 5/8"
      4. Compressive strength of specified polymer concrete: 14,000 psi.
      5. Flexural strength of polymer concrete: 3,000 psi.
      6. Channel shall be model No.2000 or approved equal.

   ii. Edges & Turf Connection**:** See contract drawings and manufacturer's recommendations.

   iii. Accessories**:**
      1. Catch basins (System 2000), or approved equal
      2. Galvanized trash buckets (System 2000), or approved equal
      3. Concrete and/or concrete brick base support piers, as recommended by the manufacturer.

C. Pole Vault Box and Cover Materials

a. Pole vault box and cover shall be constructed of 13 gage stainless steel. Cover shall be one-quarter (1/4") inch stainless steel with reinforced stainless steel ribs. Pole vault box shall be model SSVB manufactured by Aluminum Athletic

Equipment Co., Royersford, PA, or approved equal and cover shall be model SSVC manufactured by Aluminum Athletic Equipment Co., Royersford, PA, or approved equal

PK-ESCR 743.3.1. REFERENCES

A. Pole Vault and Long Jump

a. All field event equipment must meet rules and regulations as set forth by the International Association of Athletic Federation (IAAF), the National Collegiate Athletic Association (NCAA), and the National Federation of State High School Associations (NFHS).

PK-ESCR 743.3.2. SUBMITTALS

A. Long Jump Landing and Pit Submittals

a. Shop Drawings: Contractor shall submit shop drawings for the landing pit and the pit cover showing how the pit cover shall be installed on the landing pit, and dimensions of the landing pit, the structural aluminum beams, size of panels, and the locking mechanism.
b. Samples: The Contractor shall submit a sample of a one (1 gal.) gallon bag of sand for approval.
c. Catalogue Cuts: Contractor shall submit catalogue cuts for the long jump/triple jump landing pit and cover.

B. Track Perimeter Drain Submittals

a. Shop Drawings: Shop drawings shall be prepared showing all pertinent information necessary to complete the work, including but not limited to:
    i. System layout indicating exact center line dimensions
    ii. Installation details
    iii. Connections to existing drainage system

C. Survey Track Lines Submittals

a. As-Built Record Drawings: Contractor must submit as-built drawings seven (7) days after the installation of the synthetic track surface. Contractor shall submit as-built both in paper form and in AutoCAD format on a minimum 4 GB USB Drive.

D. Pole Vault Box and Cover Submittals

a. Shop Drawings: Contractor shall submit shop drawings, showing all dimensions, installation, and construction details.
b. Catalogue Cuts: Catalogue cuts of pole vault box and cover shall be submitted for approval, at least 14 days prior to ordering. Where a unit other than the pre-approved model number is proposed, the Contractor will also submit a technical data chart comparison proving that the proposed equipment is equal to specified model in all respects.

PK-ESCR 743.3.3. QUALITY CONTROL

A. Track Perimeter Drain

a. Qualification: The entity installing the track perimeter drain must show proof of experience in the installation of channel drain systems, of the same design as specified in this contract. Fields certified by the International Amateur Athletic Federation and the Athletic Congress shall be considered proof of the above requirements. The Contractor shall submit a list containing a minimum of two (2)

channel drain installations constructed within the last five (5) years, along with the names and phones numbers of people to contact for reference. The Contractor shall employ only qualified, experienced supervisors and technicians who are trained and skilled in the installation of the channel drain system.

B. Survey Track Lines:

a. Qualification: The Contractor shall provide evidence showing the Licensed Surveyor of having experience in setting calibration points for at least three (3) running tracks.

b. Coordination: The Contractor shall coordinate the work with others in marking the running track, this includes, and is not limited to, the Surveyor, the Prefabricated Synthetic Track Surface installer, and the Engineer. Prior to the start of construction, the Contractor will contact the Engineer and arrange a mutually convenient schedule to coordinate the work involved, including review of Lane Markings and Field Events.

PK-ESCR 743.3.4. DELIVERY, STORAGE, AND HANDLING

A. Pole Vault Pit and Cover Delivery and Storage:

a. Contractor shall deliver the items to site and store it in the storage container as directed by the Engineer or as shown on the drawings. Contractor shall maintain all the equipment until Substantial Completion. Any equipment that is found to be damaged or missing prior to Substantial Completion shall be replaced by the General Contractor at no extra cost to the City.

PK-ESCR 743.3.5. WARRANTY

A. **Track Perimeter Drain Warranty:** The contractor shall submit a Manufacturer's Warranty, which guarantees the usability for its intended use, for a period of one (1) year commencing with the date of substantial completion or two (2) years from the date of purchase or whichever occurs first. The warranty must provide full coverage including materials and workmanship.

PK-ESCR 743.4. METHODS

A. Long Jump Landing and Pit Methods

a. Preparation of Subgrade: The fine grade shall be prepared to line and grade and compacted where practicable with an approved self-propelling roller weighing not less than ten (10) tons. All hollows and depressions which develop under rolling shall be filled with acceptable material and shall again be rolled. This process of shaping, filling, and rolling shall be repeated until no depressions develop.

i. The Contractor shall remove from the subgrade all debris, foreign material, and all other undesirable material designated by the Engineer. The fine grade shall not be muddy or otherwise unsatisfactory when broken stone base is placed upon it. If the fine grade becomes rutted or displaced, due to any cause whatsoever, the Contractor shall regrade same without additional payment.

b. Broken Stone Base: The broken stone base shall be installed in two (2") inch lifts over the geotextile and compacted to a ninety percent (90%) Proctor Density, maintaining a consistent slope from the edge of the landing pit to the slotted drainage pipe in the center. The broken stone base must be free draining. After

the stone base is installed and compacted, additional drainage geotextile shall be installed on top before the installation of the permeable pavers.

c. Geotextile – Drainage: After the ground has been prepared, the fabric shall be rolled directly on the ground. All seams shall be overlapped approximately six (6”) inches. No equipment, materials or machinery shall be placed on or be transported over exposed fabric. Stone base shall then be carefully placed to prevent dislocation of the fabric.
    i. If the fabric is damaged during installation, the rupture shall be removed and the damaged area shall be covered with a patch of new fabric which will overlap the undamaged fabric approximately six (6”) inches in all directions. All repaired fabric surface costs will be deemed part of the price bid.

d. Polyethylene Pipe: All slotted polyethylene pipe shall be laid in reasonably close conformity to line and grade and shall have a full, firm, and even bearing at each joint and along the entire length of pipe and surrounded with the broken stone base drainage material, in accordance with the plans, specifications, and directions of the Engineer. Joint misalignment shall not result in offsets, in the interior smooth liner, greater than one-quarter inch (1/4"). Pipe laying shall begin at the downstream end and progress upstream. Any single run of pipe, excluding end sections, shall consist wholly of the same type material unless otherwise directed by the Engineer. No section of pipe used shall be less than three feet (3') in length. Installation of the pipe shall be in accordance with ASTM Recommended Practice D2321. Connection(s) and fittings to the drainage system (pipes or structures) shall be deemed included in the price bid for this item.

e. Concrete Pavers: Pavers shall be clean when placed. Pavers which are not satisfactorily clean shall be washed before placing. The pavers shall be placed according to the patterns shown on the plans, true to line and grade unless otherwise noted on the plans, sand joints shall be hand tight. The bedding course in front of the pavement shall not be disturbed or walked on during the laying of the pavers.
    i. The pavers shall be laid on a sand base with a maximum thickness of one inch (1”). The sand cushion shall be compacted by rolling with a roller weight of one hundred fifty pounds (150 lbs.) per foot of width, or by tamping as directed by the Engineer.
    ii. After the pavers are installed, sand shall be swept into resulting joints. Pavers shall be vibrated with a plate type compactor forcing sand to settle. Process shall be repeated until joints are full to satisfaction of the Engineer.

f. Concrete Curb: Curb shall be constructed in independent sections and shall have smooth plane ends separated by expansion joints of the dimensions shown on the drawings. Shape of the curbs shall allow for the installation of a pit cover as shown in the shop drawings. Steel bar reinforcement between expansion joints shall be secured to chairs of the proper height to hold them in position while concrete is poured. Distance between supporting chairs shall not be greater than five (5') feet apart. Reinforcing bars at expansion joints shall be bent to the horizontal and the ends wrapped with tar paper held by duct tape.
    i. All forms shall be set true to line and grade and held rigidly in position. They shall be either of metal or of acceptable planed and matched lumber, and of such construction that a smooth surface shall be provided. After the forms are erected and reinforcing steel is set in place, all contact

surfaces within forms shall be moistened. Concrete shall be placed in horizontal layers of uniform thickness, with each layer thoroughly consolidated before placement of the next layer. Thickness of each layer shall not exceed eighteen (18") inches with reinforced members. Stiff concrete mixes (low slump) shall be consolidated either by hand tools or by mechanical vibrators. The concrete shall be worked thoroughly around the reinforcement and around the pipe sleeves. In the use of internal vibrators, care shall be taken to avoid separation of aggregates and to avoid hitting the forms sufficiently to cause damage. Exposed concrete surfaces shall have a float finish. Surfaces shall be finished smooth and true by means of wooden or steel floats and have edges, including those of joints, rounded or chamfered.

ii. Forms shall be left in place for a minimum of three (3) days or until the concrete has set sufficiently so that, in the opinion of the Engineer, they can be removed without damage to the curbing. The curbing shall immediately upon removal of the forms be wetted and rubbed down to a smooth and uniform surface by means of carborundum or other abrasive blocks. For this work, a competent and skilled finisher shall be employed. The Contractor shall do all the necessary work to join new curb to existing in a neat and professional manner to the satisfaction of the Engineer. The curb shape shall be formed as shown on the shop drawings.

iii. Curb footings shall be of the same concrete as the curbs and shall be constructed as shown on the details. Concrete footings shall be installed on all curb ends and corners with concrete forming tubes of the proper diameter and cut to the required lengths.

g. Sand: The sand shall be placed in the landing pit to the depths shown on the plans and compacted to 90% maximum dry density.

h. Pit Cover: Contractor shall assemble and install pit cover and auxiliary panel support beams as recommended by the manufacturer and shown in the shop drawings. Covers shall sit in a ledge formed into the concrete curb as shown in the shop drawings so that the top of the rubber athletic surface is flush to the top of curb. Contractor shall demonstrate to the satisfaction of the Resident Engineer the function of the locking mechanism for the cover.

B. Track Perimeter Drain Methods

a. Site Preparation: Excavate the area for channel placement wide enough and deep enough to accommodate the channel drain and a minimum of four (4”) inch concrete encasement. Channels require a minimum of four inches of concrete support on both sides as well as underneath the channel and top of channel must be evenly aligned to the surface of the surrounding pavement.

b. Channel Drain System: Channel drain system shall be installed in strict accordance with the Manufacturer’s recommended installation instructions and the drawings. Sections of drain shall be installed from the outlet ends of the system working from the catch basins. Insert channels from above to allow ends to interlock. Channel drain sections shall be placed on brick, rebar basket, low slump concrete grout slurry, or suspended to obtain correct finished elevation. Cutting will be made, if required, by masonry or concrete saw. Cover the top of the channel with tape, plastic, or plywood strips to protect the channel surface from concrete during pouring. Place concrete in a manner that will not dislodge the channels. Any damaged components, as a result of installation or otherwise, must be immediately replaced at no additional cost to the City.

c. Joints: Joints shall be water tight with continuous seal, as per manufacturer's recommendations.
d. Level and Layouts: It is essential for the channel drain system to be placed in the correct alignment, and finished surface of channels drains must be perfectly level, as per manufacturer's recommendations.
e. Clean Up: The Contractor shall provide the labor, supplies, and equipment necessary for final cleaning of surfaces and installed items. The contractor shall keep the channel drain system clean and clear of all debris throughout the construction duration. Protection shall be removed after placement of the synthetic track material, or at the discretion of the Engineer.

C. Survey Track Lines Methods:

a. The Surveyor shall check tolerances for the following layers of pavements: compacted subgrade, asphalt binder, and finished grade of the asphalt top course. The surface shall not vary more than one-eighth inch in ten feet measured in any direction. The general level of the finished surface shall not deviate on a straight line from inner curb to outer curb by more than one quarter inch. Surveyor shall stretch a wire transversely across the track, from inner curb to outer curb, at 10' intervals around the entire track. Deviations exceeding tolerance limits shall be clearly marked by the Surveyor on the pavement with spray paint for correction under the item "Asphalt Pavement for Track."
b. Surveyors shall layout and certify the location of the lane lines and calibration points. The Surveyor shall provide the Engineer with all available options permitted, including but not limited to location of finish lines, various classes of races or events to be accommodated, color code, design or markings and lane width. The Contractor shall submit all dimensions needed to properly mark the track.
c. The Surveyor shall coordinate the work with others and supervise the marking of the running track and other field events. The Surveyor shall incorporate dimensioning as shown on the layout and marking plans in the Surveyor's work to the approval of the Engineer.
d. The Surveyor shall perform all work necessary to calibrate the track for all track events recognized by the International Amateur Athletic Federation including the following track and field events recognized by the National Collegiate Athletic Association and the National Federation of State High School Associations. The following calibration and markings are to comply with the current rules and regulations of the IAAF, the NCAA and the NFHS:

1. 100 Meter Dash
2. 200 Meter Dash
3. 400 Meter Dash
4. 800 Meter Dash
5. 1500 Meter Dash
6. 3000 Meter Dash
7. 1 Mile Run
8. 4 x 100 Meter Relay
9. 4 x 200 Meter Relay
10. 4 x 400 Meter Relay
11. 4 x 500 Meter Relay
12. 110 Meter High Hurdles
13. 400 Meter Intermediate Hurdles
14. Start and Finish Lines
15. Hurdle Location Markers

16. Lane Lines
17. Exchange Zones
18. Mark Lanes
19. High Jump
20. Long Jump/ Triple Jump
21. Pole Vault

e. The critical points of the track shall be staked out as shown on the plans and every 25 feet or less between such points. The stakes shall be offset so they shall not be disturbed during construction of the track and field events. The stakes shall be stationed and cut and fill figures marked upon the side of the stake so that the top of the proposed curb can be set there from.
f. Upon completion of the stakeout, a map showing the layout of the work, stakes and elevations, signed and sealed by the Land Surveyors shall be submitted by the Contractor to the Engineer for approval before construction of the work.
g. Contractor shall mark locations of each side and each end of track. Location of concrete radius markers shall be established with stakes and survey tacks.
h. "As Built" Drawing: The Contractor shall submit an "as built" drawing signed and sealed by a licensed surveyor showing all dimensions and grades. The dimensions and grades shall be guaranteed to be accurate and correct in accordance with the current rules and regulations of the International Amateur Athletic Federation. If the calibration points do not meet the minimum standards of the IAAF, the Contractor shall recalibrate and re-mark the running track and other field events at no additional cost to the city.
    i. Date, name and address of guarantor shall appear on the drawing including a complete schedule of angles and radii necessary for calibration.
    ii. The Surveyor shall also submit schedule of chord distances. The chord distances shall be calculated for angles less than 450 as taken from the nearest 900 mark. The chord distances shall be calculated from points at the running side of the lane line. Upon completion of the work outlined in this contract, all chord distances shall be verifiable in the field with a certified steel or fiberglass metric tape to a tolerance of +1/2".
    iii. The Surveyor shall make all measurements and certify on the drawing that all calibration points shown on the "as built" drawing were accurately measured and properly designated on the track and where needed for field events.
    iv. The "as built" drawing shall show the final grades of the running track after the surface tolerances have been checked and certified by the Surveyor.

D. Pole Vault Box and Cover Methods

a. Box and cover shall be installed in reinforced concrete footings in accordance with the contract drawings and manufacturer recommendations. The pole vault box shall be aligned in the correct position and properly anchored to the concrete base. The box cover shall be set flush with the finished surface.

PK-ESCR 743.5. MEASUREMENT

For furnishing and constructing the **LONG JUMP, LANDING AND PIT**, in accordance with plans, specifications and directions of the Engineer, the Contractor shall receive the **LUMP SUM** price bid.

The quantity of **TRACK PERIMETER DRAIN** shall be the number of **LINEAR FEET** installed in accordance with the plans, specifications and directions of the Engineer.

For surveyor's services for **SURVEY TRACK LINES** all in accordance with the plans and specifications and directions of the Engineer, the Contractor shall receive the **LUMP SUM** price bid.

For furnishing and installing **POLE VAULT PIT AND COVER** in accordance with plans, specifications and directions of the Engineer, the Contractor shall receive the **LUMP SUM** price bid for each item.

PK-ESCR 743.6. PRICES TO COVER

The price bid shall be a **LUMP SUM** price for **LONG JUMP LANDING AND PIT**, and shall include the cost of all labor, materials, equipment and incidental expenses necessary to complete the work, including the slotted polyethylene drainage pipe, connection to the drainage system, broken stone base, geotextile, concrete curb, concrete pavers, sand, aluminum cover, locking mechanism, and hardware, all in accordance with the plans and specifications, to the satisfaction of the Engineer.

The price bid shall be a unit price per **LINEAR FOOT** of **TRACK PERIMETER DRAIN** complete the work including concrete base with fibrous reinforcement, straight and radial pieces of the channel drain, brick, edges, in-line catch basins, trash buckets, catch basin covers, connections to drainage system, and all accessories needed to complete the work, all in accordance with the plans and specifications and directions of the Engineer.

The price shall be a **LUMP SUM** of **SURVEY TRACK LINES** and shall include the cost of all labor, materials, and equipment including the checking of all surface tolerances, locating designated points, supervision of lane marking and field events, submission of drawing, 4 GB USB drive, and all other incidental expenses necessary to complete the work in accordance with the plans and specifications to the satisfaction of the Engineer.

The price bid shall be a **LUMP SUM** price for the **POLE VAULT PIT AND COVER** and shall include the cost of all labor, materials, equipment and incidental expenses necessary to complete the work, hardware, furnishing and storing the equipment until Substantial Completion, and submittals, all in accordance with the plans and specifications, to the satisfaction of the Engineer.

Unclassified Excavation, Excavation, Lane Striping, Field Event Markings, and Resilient Sports Surface – 13mm shall be paid for separately under its respective item.

Payment will be made under:

Item No.	Item	Pay Unit
PK-ESCR 137	**LONG JUMP, LANDING AND PIT**	**L.S.**
PK-ESCR 743	**TRACK PERIMETER DRAIN**	**L.F.**
PK-ESCR 953	**SURVEY TRACK LINES**	**L.S.**
PK-ESCR 954	**POLE VAULT PIT AND COVER**	**L.S.**

END OF SECTION

SECTION PK-ESCR 744 – BBQ GRILL

WORK: Under this Item, the Contractor shall furnish and install **BBQ-2 GRILL TYPE OR BBQ-3 GRILL TYPE**, in accordance with the plans, specifications and directions of the Engineer.

MATERIALS: Unless otherwise specified herein, all materials shall conform to the requirements of Section "B", Materials and Methods of Construction.

BBQ Grill: BBQ Grill shall be made of heavy duty steel, three-sixteenth (3/16") inch thick, thirty four (34") inches high, with two (2) twenty four (24") inch diameter grill bowls. Each grill bowl shall have a lockable swivel bottom for ash dump with a mid-hinged steel cooking grate. BBQ grill shall be finished with a black, heat resistant powder coating. BBQ Grill shall be model no. "BBG 2 SM" or "BBG 3 SM" as manufactured by Most Dependable Fountains, Inc., Arlington, TN, or approved equal.

Mounting Plate: Mounting plate shall be made of stainless steel, ten (10") inches in diameter. Mounting plate shall be "10" Stainless Steel Surface Carrier", as manufactured by Most Dependable Fountains, Inc., Arlington, TN, or approved equal.

Anchor Rods: Anchor Rods for surface mounting shall be 1/2" x 12" zinc plated steel rods and as shown in the drawings.

Concrete Footing: Concrete footing shall be as specified in Section ESCR-4.06 and shall be as shown in the drawings.

Steel Bar Reinforcement: Shall meet the requirements of the, the NYC Building Code and the lasts ASTM specification for "Deformed and Plain Billet-Steel Bars for Concrete Reinforcement", Designation A-615 and in accordance with the Item "Steel Bar Reinforcement". Reinforcement shall be of the sizes and dimensions as shown in the drawings and see Section ESCR-4.14.

INSTALLATION: The Contractor shall install the BBQ Grills in locations as shown on the drawings per the manufacturer's instructions, and at the direction of the Engineer. Attachment to the concrete pavement shall utilize the 10" Stainless Steel Surface Carrier and anchor rods per the manufacturer's instructions. The concrete pavement and concrete footing shall be of the dimensions and at locations as shown in the drawings.

SUBMITTALS: All submittals shall be submitted prior to manufacture and in accordance with the requirements of the S-Pages.

Catalog Cuts: The Contractor shall submit catalog cuts of the BBQ Grill and Stainless Steel Surface Carrier for approval prior to installation.

MEASUREMENT AND PAYMENT: For each **BBQ GRILL** furnished and installed in accordance with the plans, specifications, and directions of the Engineer, the Contractor shall receive the unit price bid.

The price bid shall be a unit price for **EACH** BBQ Grill and shall include the cost of all labor, materials and incidentals necessary to complete the work, including the mounting plate and anchors, concrete footings and steel bar reinforcement, all in accordance with the plans and specifications, to the satisfaction of the Engineer.

Excavation and surrounding pavement shall be paid for separately under their respective contract items.

Item No.	Item	Pay Unit
PK-ESCR 744 A	**BBQ – 2 GRILL TYPE**	**EA**
PK-ESCR 744 B	**BBQ – 3 GRILL TYPE**	**EA**

END OF SECTION

SECTION PK-ESCR 747 – ASPHALT FULL DEPTH – TENNIS COURTS

WORK: Under these items, the Contractor shall furnish and install **FULL DEPTH ASPHALT PAVEMENT** and **ASPHALT PAVEMENT FOR TENNIS COURTS** in accordance with the plans, specifications, and directions of the Engineer.

DESCRIPTION: The asphalt pavement shall consist of a binder course and a top course to the dimensions as shown on the plans and details. The binder course shall be asphalt concrete, Type 3 and the top course(s) shall be Type 7 or Type 7F as defined by the N.Y.S. D.O.T. Standard Specifications. For tennis courts only the top course shall be installed in two (2) lifts as shown on the details. A Laser Spreader will be required for Tennis Courts. See 'Spreading of Top Course Tennis Courts Only'.

MATERIALS:

Asphalt: The following requirements shall apply for both Binder Course and Top Course:

Asphalt Cement shall be 100% soluble in Trichloroethylene. The mixing and placing temperature shall be 250 degrees to 325 degrees °F. The viscosity of the asphalt shall be AC 20. The mix shall have a minimum Marshall Stability of 500 lbs, flow of 8 to 16, and percent of air voids 3 to 5 percent. For full depth asphalt pavement (top and base courses) and the base course (only) for tennis courts, the asphalt mix may contain a maximum of 15% by weight of Recycled Asphalt Pavement (R.A.P.) material. The R.A.P. shall be certified by the inspection service before use and shall be free of dirt, debris, garbage, metal, glass and any other deleterious material. R.A.P. must have the binder content tested by the plant before mixing. R.A.P. shall be screened prior to mixing so that final mix meets the specification delineated below. The City reserves the right to reject the R.A.P. asphalt mix if in the determination of the Engineer, the mix is contaminated with dirt, debris, garbage, metal, or glass. R.A.P. is not acceptable for the top courses of asphalt pavement for tennis courts.

Binder Course: The material for the binder course shall meet the requirements of the latest edition of the NYSDOT Standard Specification Section 400 "Bituminous Pavements". Composition of the asphalt concrete binder shall be Type 3 as indicated in the following table:

COMPOSITION OF BINDER TYPE 3

SCREEN SIZE	GENERAL LIMITS % PASSING	JOB MIX TOL. %
1 1/2"	100	-
1"	95-100	-
1/2"	70-90	+/-6
1/4"	48-74	+/-7
1/8"	32-62	+/-7
No. 20	15-39	+/-7
No. 40	8-27	+/-7
No. 80	4-16	+/-4
No. 200	2-8	+/-2
Asphalt Content, %	4.5-6.5	+/-0.4

Top Course: The material for the top course shall meet the requirements of the latest edition of the NYS DOT Standard Specifications Section 400 "Bituminous Pavements". Composition of the asphalt concrete top course shall be Type 7 or Type 7F as indicated in the following table:

COMPOSITION OF TOP COURSE- TYPE 7

GENERAL LIMITS

SCREEN SIZE	% PASSING	JOB MIX TOL %
1/2"	100	-
1/4"	90-100	-
1/8"	45-70	+/-6
No. 20	15-40	+/-7
No. 40	8-27	+/-7
No. 80	4-16	+/-4
No. 200	2-6	+/-2
Asphalt Content %	6.0-8.0	+/-0.4

Forms: The forms for this work shall be of wood of an approved type and a minimum length of ten feet (10') for tangents and curves, unless otherwise shown of the plans.

All forms shall be straight, free from bends and warps at all times, and shall be cleaned thoroughly and oiled before pavement is placed against them; this cleaning and oiling being repeated daily as the forms are moved ahead. The forms shall rest firmly upon the thoroughly compacted sub-grade throughout their entire length, shall be joined neatly and tightly and staked securely to line and grade at least two hundred feet (200') in advance of the point of placing pavement by using at least three (3) bracing pins or stakes to each ten foot (10') length of side form, so that they will resist the pressure of the pavement and the impact of the roller without springing.

Approval of Sources of Supply: Approval of the sources of supply of aggregates shall be obtained from the Engineer prior to the delivery of material.

Inspection: Equipment, materials, and preparation of the mixtures will be subject to inspection and approval at the refineries and plant as may be directed. In conjunction therewith, the

Contractor shall employ the services of an approved inspection service for the purposes of providing plant certification of the asphalt pavement mixtures conformance to these specifications.

The inspection service shall be under the jurisdiction of and shall report directly to the Engineer.

Mix Samples: The Contractor shall submit, when required by the Engineer, samples of the materials and mixtures the Contractor to use. Submittals shall be in accordance with the S-Pages. For the top course, the following samples shall be submitted:

(a) Coarse aggregate.....2 pounds
(b) Fine aggregate.....2 pounds
(c) Filler..... 2 pounds
(d) Asphalt..... 1 quart
(e) Asphaltic mixture..... 10 pounds

Pavement Samples: The Contractor shall furnish for testing, when required by the Engineer, samples from the completed work. The areas of pavement so removed shall be replaced by new mixture and refinished without additional compensation.

Tests: Unless otherwise specifically provided, tests of materials shall be made in accordance with the latest specifications of the American Society for Testing and Materials.

Transporting: Shipments of material shall be made in tight vehicles previously cleaned of all foreign material, and delivered to the work, so that it will not become contaminated in any way.

INSTALLATION:

Subgrade Preparation: The subgrade shall be compacted with equipment that will yield the following density:

Cohesive Subgrade -	Minimum of 95% of AASHTO T 180 Method D density
Cohesionless Subgrade -	Minimum 100% of AASHTO T 180 Method D density

Spreading of Binder Course: Plant-Mixed binder course, shall be furnished and laid by means of a mechanical spreader of approved design to a depth which after final compaction shall be equal to the specified depth. In areas where the use of a mechanical spreader is impractical, as determined by the Engineer, other approved means of spreading and compacting may be permitted. The use of hand rakes will not be permitted. The Contractor shall use lutes where necessary.

Rolling and Compacting: Rollers used for compacting the binder course shall be well balanced, self-propelled, tandem rollers, weighing between seven (7) and eight (8) tons or approved vibratory roller. Rolling shall proceed continuously not in excess of the following rates:

Method of Placement	Square Yards/Hour/Roller
Hand	800
Machine	1200

After the final compaction, the binder course shall have a density of not less than 95% percent of the theoretical maximum density as calculated in accordance with Appendix B of the Asphalt Institute Manual, MS-2.

After the compaction of the binder course and before the placing of the top course, the binder course shall be checked for depressions. The Contractor shall check the entire area using a ten foot (10') wood or metal straight-edge. Any depression greater than one-eighth inch (1/8") shall be corrected before the placing of the top course.

Tack Coat: All contact surfaces, including binder and intermediate, shall be applied with hot asphaltic cement, RC-70 or MC-70 before the surface mixture(s) are laid.

Spreading of Top Course: The top course mixture shall be furnished and laid by means of a mechanical spreader of approved design to a depth which after final compaction shall be equal to the specified depth. In areas where the use of a mechanical spreader is impractical, as determined by the Engineer, other means of spreading and compacting may be permitted. The use of hand rakes will not be permitted. The Contractor shall use lutes where necessary.

Where suitable abutting curb or headers are not available, grade control forms satisfactory to the Engineer shall be provided for screening. No extra payment will be made for these forms, but the cost of these shall be deemed included in the price bid for this item. The forms shall be removed, or with the approval of the Engineer, may be left in place.

Mixture shall be laid only where the surface to be covered is free from loose or foreign material, dry, and only when weather conditions, in the opinion of the Engineer, are suitable.

The Contractor shall provide suitable means for keeping all small tools clean and free from bituminous accumulations.

Rolling and Compacting: Upon completion of the spreading of the top course mixture, the material shall be consolidated thoroughly and uniformly with self-propelled tandem rollers. The top course shall be free from roller marks.

Rollers used for compacting the top course shall be well balanced, self-propelled, tandem rollers, weighing between seven (7) and eight (8) tons or approved vibratory roller. The roller shall have a compression under the rear wheel of between 200 and 300 pounds per linear inch of roll at a rate not exceeding 800 square yards per hour per roller. After compaction, the surface course shall have a density not less than 97% theoretical maximum density as determined by Appendix B of The Asphalt Institute Manual MS-2.

In locations inaccessible to the roller, the compression shall be effected with vibratory plate compactors or iron hand tampers weighing not less than twenty-five (25) pounds and having a bearing area not exceeding forty-eight (48) square inches, or other impact type equipment.

Joints: Construction shall be as nearly continuous as is possible. The roller shall pass over the end of the laid mixture only when a practical necessity. When the operation of laying is interrupted, the end of the laid material shall be left unrolled until such time as work is resumed, in order that there be no joints throughout the project. If it is necessary to roll the end of the laid mixture during construction, or permit traffic to pass over such temporary end, thus consolidating it, the joint so made shall be cut back before re-commencing the operation of laying, in order to present a fresh, clean surface for contact with the newly placed material. The edges of such joints shall be painted with liquid asphalt (RC-70 or MC-70) and the use of hot smoothing irons in finishing such joints, shall not be permitted.

Spreading of Top Course for Tennis Courts Only: The top course shall be installed in two (2) lifts and laid by means of a laser spreader of approved design. After the first lift the courts shall be flooded with water and allowed to drain. Any ponding or "bird baths" remaining after 45 minutes which cover a nickel shall be filled and leveled prior to applying the second lift. Depressions greater than one-eighth inch (1/8") shall be corrected.

Finished Surface: The surface of the top course of the pavement after compression shall be smooth and true to crown and grade, free from depressions, waves, bunches, overlapping seams and unevenness in surface.

After the compaction of the top course the Contractor shall check the entire paved area for depressions, using a ten foot (10') wood or metal straight-edge. Any depressions greater than three-sixteenths of an inch (3/16") shall be corrected by removing the top course of the affected areas, and replacing with new material to form a true and even surface.

DEFECTS: Where defects in composition, compression or finish appear in the completed work, such finished areas shall be removed to the full depth of the course and the defective material replaced with the required thickness of pavement at the expense of the Contractor for such removing and replacing.

COLD WEATHER: Asphaltic pavement shall be mixed and placed in accordance with minimum placement temperature as specified in the following table:

MINIMUM PLACEMENT TEMPERATURES
MAT THICKNESS IN INCHES

SURFACE TEMP. (F)	1/2"	3/4"	1"	1 1/2"	2"	3"
			TEMPERATURE OF THE MIX			
+32-40	--	--	--	305	295	280
+40-50	--	--	310	300	285	275
+50-60	--	310	300	295	280	270
+60-70	310	300	290	285	275	265
+70-80	300	290	285	280	270	265
+80-90	290	280	275	270	265	260
+90	280	275	270	265	260	255
ROLLING TIME MINUTES	4	6	8	12	15	15

Unless notified by the Engineer in writing, no material shall be mixed or placed when the temperature is at, or lower than 50 degrees °F. Where paving between the temperatures of 33 and 50 degrees °F is approved in writing by the Engineer, paving shall be permitted under condition that the Engineer shall verify compliance with the minimum temperatures for both the temperature of the surface and temperature of the mix as shown in the chart above. The Contractor shall provide thermometers to verify compliance with the minimum requirements. No material shall be mixed or placed at temperatures of 32 degrees and below.

PRECIPITATION PROBABILITY: Placement of bituminous paving materials shall not be scheduled when the Precipitation Probability, obtained by the Contractor from the U.S. Weather Bureau within three (3) hours prior to the start of such operations, equals or exceeds fifty percent (50%). The Contractor shall notify the Engineer of the exact time at which the above information was obtained.

MEASUREMENT AND PAYMENT: The quantity of **FULL DEPTH ASPHALT PAVEMENT** and **ASPHALT PAVEMENT FOR TENNIS COURTS** to be paid for shall be the number of **SQUARE YARDS** of full depth asphalt pavement or asphalt pavement for tennis courts furnished and placed to the lines and grades shown on the plans or as directed by the Engineer.

The price bid shall be a unit price per **SQUARE YARD** of Full Depth Asphalt Pavement or Asphalt Pavement For Tennis Courts, and shall include the cost of furnishing all labor, materials, and equipment, including inspection services, and other incidental expenses to complete the work in accordance with the plans and specifications and to the satisfaction of the Engineer.

All costs associated with plant inspections and laboratory tests shall be borne by the Contractor and shall be deemed included in the price bid for full depth asphalt pavement.

Excavation and foundation material, if required, shall be paid for separately under their respective contract items.

Item No.	Item	Pay Unit
PK-ESCR 747 A	**FULL DEPTH ASPHALT PAVEMENT**	**S.Y.**
PK-ESCR 747 B	**ASPHALT PAVEMENT FOR TENNIS COURTS**	**S.Y.**

END OF SECTION

SECTION PK-ESCR 748 – FOUNDATION MATERIAL FOR CONCRETE (TRUCK MEASURE)

WORK: Under this Item, the Contractor shall furnish and place **FOUNDATION MATERIAL FOR CONCRETE (TRUCK MEASURE)** in accordance with the plans, specifications, and directions of the Engineer.

MATERIALS: Unless otherwise herein specified, all materials and methods of construction shall meet the requirements of the NYCDOT Standard Highway Specifications

Material for Foundation shall be a straight run of single size aggregate and shall consist of either all one and one-half (1 1/2") inch stone or all three-quarter (3/4") inch stone in accordance with ASTM C33, free from organic or other deleterious material. In addition, Foundation Material may contain no more than five (5%) percent of fines, defined as aggregates passing a No.4 sieve or smaller.

The Magnesium Sulfate Soundness loss after ten (10) cycles shall be eighteen (18%) percent or less, as per ASTM C88. Coarse aggregate may be one of the following:

A. Broken Stone or gravel of approved quality and conforming to the requirements of the NYCDOT Standard Highway Specifications.

B. Recycled Material consisting of at least ninety five (95%) percent by weight of the following:

    1. Recycled Portland Cement Concrete Aggregate or

    2. Recycled Portland Cement Concrete Aggregate mixed with Stone Gravel.

LABORATORY TESTING: The Contractor shall at the direction and discretion of the Engineer furnish a certified report by an approved Materials Testing Laboratory showing the materials composition, sieve analysis, plasticity index, and soundness of the representative samples of recycled material they propose to use.

The Engineer will deliver the samples to an independent testing laboratory. The Contractor shall bear the responsibility for all costs associated with laboratory testing. No recycled material shall be delivered to the site until positive test results have been obtained. The Engineer reserves the right to reject on or after delivery any material which does not, in their opinion, meet these specifications.

INSTALLATION:

Preparation of Fine Grades for New Construction: Before any concrete is placed upon fine grade, the fine grade shall be prepared to line and grade and compacted where practicable with an approved self propelled roller weighing not less than ten (10) tons. All hollows and depressions developed under rolling shall be filled with acceptable material and rerolled. This process of shaping, filling, and rolling shall be repeated until no depressions develop.

The Contractor shall remove from the subgrade all debris, foreign material, and all other undesirable material designated by the Engineer. The fine grade shall not be muddy or otherwise unsatisfactory when the pavement is placed upon it. If the fine grade becomes rutted or displaced, due to any cause whatsoever, the Contractor shall regrade same without additional payment.

Preparation of Existing Foundation: Existing foundation material shall be supplemented as required to achieve the required thickness shown on the plans or provide for positive drainage of completed pavement.

Spreading: Foundation material shall be evenly spread on prepared subgrade or existing foundation in the position shown on the plans or as directed by the Engineer. Foundation material shall be laid in four (4") inch layers (maximum) and rolled while wet with a seven (7) to twelve (12) ton tandem roller (or other approved method satisfactory to the Engineer) to the thickness shown on the plans or as directed by the Engineer.

MEASUREMENT AND PAYMENT: The quantity of **FOUNDATION MATERIAL FOR CONCRETE (TRUCK MEASURE)** to be paid for under this Item shall be the number of **CUBIC YARDS,** measured in trucks as delivered, furnished and placed in accordance with the plans, specifications, and directions of the Engineer.

The price bid shall be a unit price per **CUBIC YARD** of Foundation Material For Concrete (Truck Measure) furnished and placed and shall include the cost of all labor, materials, equipment, and incidental expenses necessary to complete the work, including laboratory testing (if necessary) and preparation of fine grades, all in accordance with the plans and specifications, to the satisfaction of the Engineer

Excavation shall be paid for under its respective Item.

Item No.	Item	Pay Unit
PK-ESCR 748	FOUNDATION MATERIAL FOR CONCRETE (TRUCK MEASURE)	C.Y.

END OF SECTION

SECTION PK-ESCR 749 – FOUNDATION MATERIAL FOR ASPHALT (TRUCK MEASURE)

WORK: Under this item the Contractor shall furnish and place **FOUNDATION MATERIAL FOR ASPHALT (TRUCK MEASURE)** in accordance with the plans, specifications, and directions of the Engineer.

INTENT: The intent of this item is to provide sound foundation/base material for installation of asphalt pavement on poor subgrade or for certain sports pavement including, but not limited to, tennis, running track, and roller hockey. See Standard Detail, Pavement Details No. 1 for all applications.

MATERIALS: Unless otherwise herein specified, all materials and methods of construction shall comply with the requirements of the NYCDOT Standard Highway Specifications.

Material for foundation shall consist of coarse aggregate per ASTM C33, free from organic or other deleterious material. Coarse aggregate shall be graded within the following limits:

Passing Sieve (Dry Analysis)	Percent by Weight
2"	100
1/4"	30-65
No. 40	5-40
No. 200	0-10

The Magnesium Sulfate Soundness loss after four (4) cycles shall be twenty percent (20%) or less per ASTM C88.

Coarse aggregate shall be Broken Stone or Gravel of approved quality conforming to the requirements of the NYCDOT Standard Highway Specifications". **No recycled material shall be permitted**.

LABORATORY TESTING: The Contractor shall at the direction and discretion of the Engineer, or when quantities exceed thirty (30) cubic yards , furnish a certified report by an approved Materials Testing Laboratory showing the materials composition, sieve analysis, plasticity index, and soundness of the representative samples of material they proposes to use.

The Engineer will deliver the samples to an independent testing laboratory and the Contractor shall bear the responsibility for all costs associated with laboratory testing. The Engineer reserves the right to reject on or after delivery any material, which does not, in their opinion, meet these specifications.

INSTALLATION:

PREPARATION OF FINE GRADES FOR NEW CONSTRUCTION: Before any aggregate is placed upon fine grade, the fine grade shall be prepared to line and grade and compacted where practical with an approved self propelled roller weighing not less than ten (10) tons. All hollows and depressions developed under rolling shall be filled with acceptable material and shall again be rolled. This process of shaping, filling, and rolling shall be repeated until no depressions develop.

The Contractor shall remove from the subgrade all debris, foreign material, and all other undesirable material designated by the Engineer. The fine grade shall not be muddy or otherwise unsatisfactory when the pavement is placed upon it. If the fine grade becomes rutted or displaced, due to any cause whatsoever, the Contractor shall regrade same without additional payment.

SPREADING: Foundation material shall be evenly spread on prepared sub-grade in the position and to the depths shown on the plans or as directed by the Engineer. Foundation material shall be laid in four inch (4") layers (maximum) and rolled while wet with a seven (7) to twelve (12) ton tandem roller (or other approved method satisfactory to the Engineer) to the thickness shown on the plans or as directed by the Engineer.

SUBMITTALS: All submittals shall be submitted prior to installation and in accordance with the requirements of the S-Pages.

A three (3) pound bag of stone aggregate shall be submitted for approval with a sieve analysis and the name of the supplier.

MEASUREMENT AND PAYMENT: The quantity of **FOUNDATION MATERIAL FOR ASPHALT (TRUCK MEASURE)** to be paid for under this item shall be the number of **CUBIC YARDS** of material installed, measured in trucks used for delivery, at the site of the work, in accordance with the plans, specifications, and directions of the Engineer.

The price bid shall be a unit price per **CUBIC YARD** of Foundation Material for Asphalt furnished and placed and shall include the cost of all labor, materials, equipment, and incidental expenses necessary to complete the work, including laboratory testing (if necessary) and preparation of fine grades, all in accordance with the plans and specifications, to the satisfaction of the Engineer.

Excavation shall be paid for under its own contract item.

Item No.	Item	Pay Unit
PK-ESCR 749	FOUNDATION MATERIAL FOR ASPHALT (TRUCK MEASURE)	C.Y.

END OF SECTION

SECTION PK-ESCR 751 – STEEL PICNIC TABLE

WORK: Under these items the Contractor shall furnish and install **STEEL PICNIC TABLE** and/or **STEEL PICNIC TABLE – ACCESSIBLE** in accordance with the plans, details, specifications and directions of the Engineer.

MATERIALS: Unless otherwise herein specified, all materials of construction shall comply with the requirements of the NYCDOT Standard Highway Specifications.

CONCRETE: Concrete for footings shall be as described in Section ESCR-4.06 and as shown on the plans and as directed by the Engineer.

PICNIC TABLES: Picnic tables shall be item no. "APT #8 R Type Perforated Steel with

Thermoplastic Coating (Stationary/Embedded Post)" Multi-Pedestal Picnic Table as manufactured by RJ Thomas Manufacturing Co., Inc., Cherokee, IA or approved equal.

Standards: Picnic table and bench standards shall be consist of galvanized high tensile strength steel tubing and frames. The tubular supports shall be provided with base angles.

The structural frame shall be three (3") inches x six (6") inches x one eighth (1/8") inch thick steel tubing, frame finish hot dip galvanized, and shall be continuously welded to the tubular supports and the base angles as indicated on the plans. All components of the frameshall be in accordance with ASTM A123. Steel shall meet the specifications for ASTM A500, Grade B which has a minimum tensile strength of 58,000 psi and a minimum yield point of 42,000 psi. Exposed ends of frame posts shall be sealed with welded on end caps.

Table and Seat Slats: Table and seat slats shall be made from fourteen (14) gauge perforated steel with nine-sixteenths inch (9/16") diameter holes punched on thirteen – sixteenths inch (13/16") straight line centers. Perforated steel shall be thermoplastic coated with UV stabilized coating which is PVC free and phthalate free. After being cleaned, components shall be heated to 550-600 degrees and then lowered into an air-fluidized bed of colored polyethylene powder, which is fused and bonded to the heated metal and baked at a high temperature to cure. Thermoplastic coating shall be a textured matt finish polyethylene which is durable and colorfast, with a DNI rating. The thermo plastic coating shall be applied to a film thickness of 3 to 6 mils without voids, tears or cuts that reveal the substrate and shall thoroughly adhere to the metal without peeling when scratched with a pick device or knife blade point. Color shall be "Black", unless otherwise shown on contract drawings.

HARDWARE AND FITTINGS: All hardware and fittings shall be as shown on the drawings. All fittings shall be steel plate of the best quality. Steel brackets shall be ten (10) gauge galvanized steel. All fittings and hardware shall be hot-dipped galvanized, providing an acceptable substrate so that applied powder coatings will not peel off. Ensure surfaces to be coated are clean and dry and free of grease, dust, rust, etc. No lacquer, urethane or other coatings which would prevent proper adhesion of powder coating shall be applied to hardware or fittings. All coated parts shall first receive corrosion inhibiting phosphate free, high pressure, high temperature treatments to improve the adhesion of the surface coating. The TGIC Polyester shall be applied to pipe and fittings at a film thickness of 3 to 6 mils by an electrostatic spray process and bake finished per manufacturer's directions. The TGIC – Polyester shall be applied without voids, tears or cuts that reveal the substrate and shall thoroughly adhere to the metal without peeling when scratched with a pick device or knife blade point. Color to be black unless otherwise indicated on the plans.

Screws and anchor bolts are to have vandal proof heads. All other bolts shall have heads peened after installation.

LABORATORY TEST FOR TGIC – POLYESTER POWDER COAT: At the discretion of the Engineer, a sample of the TGIC Polyester powder coated hardware and/or fittings shall be laboratory tested for bonding of the powder coating to the surface. Test shall be the CrossHatch test per ASTM D3359, method B. Failure to satisfactorily pass this test shall be a basis for rejection.

INSTALLATION: Picnic tables shall be placed at locations and installed in concrete footings as shown on the plans with one-half inch (1/2") diameter stainless steel anchors placed through frame supports and as directed by the Engineer.

Touch-Up and Repair: For minor damage caused by installation or transportation, clean damaged area, then:

1. On damaged galvanized surfaces, apply organic zinc repair paint complying with ASTM A780, then repair powder coating per number 2 below. Galvanizing repair paint shall have 6 percent zinc by weight. Thickness of repair paint shall be not less than that required by ASTM A123.
2. On damaged powder coated surfaces, touch-up finish in conformance with manufacturer's recommendations. Provide touch-up such that repair is not visible from a distance of six (6) feet.

SUBMITTALS: All submittals shall be in accordance with the requirements of . S-Pages.

Shop Drawings: Contractor shall submit shop drawings showing all dimensions, materials, and details for approval. Tables shall not be ordered until approval is received.

MEASUREMENT AND PAYMENT: For each **STEEL PICNIC TABLE** and **STEEL**

PICNIC TABLE – ACCESSIBLE furnished and installed, in accordance with the plans, specifications and directions of the Engineer, the Contractor shall receive the unit price bid.

The price bid shall be a unit price for **EACH** type of picnic table and shall include the cost of all labor, materials, equipment and incidental expenses necessary to complete the work, including hardware and concrete footings all in accordance with the plans and specifications to the satisfaction of the Engineer.

Excavation shall be paid for separately under its own contract item.

Item No.	Item	Pay Unit
PK-ESCR 751 A	STEEL PICNIC TABLE	EA
PK-ESCR 751 B	STEEL PICNIC TABLE, ACCESSIBLE	EA
PK-ESCR 751 C	STEEL PICNIC TABLE, WITH UMBRELLA HOLE	EA
PK-ESCR 751 D	STEEL PICNIC TABLE, ACCESSIBLE, WITH UMBRELLA HOLE	EA

END OF SECTION

SECTION PK-ESCR 753 – TOPSOIL FOR PLANTING PITS AND BEDS

PK-ESCR 753.1. DESCRIPTION

A. This section describes the furnishing and installation of **TOPSOIL FOR PLANTING PITS AND BEDS** in accordance with the plans, specifications and directions of the Engineer.

PK-ESCR 753.2. MATERIALS

A. Topsoil: Shall be a sandy/ loam, friable soil that has been removed to a depth of one foot (1') or less, if subsoil is encountered. Topsoil shall be of uniform quality, free from hard clods, stiff clay, hard pan, sods, partially disintegrated stone, lime, cement, ashes, slag, concrete, tar residues, tarred paper, boards, chips, sticks, or any other undesirable material. No topsoil shall be delivered in a frozen or muddy condition.

a. Organic Content: Topsoil shall contain at least three percent (3%) organic matter determined by loss on ignition, of moisture-free samples dried in accordance with the current method of the Association of Official Agricultural Chemists. The organic matter shall not exceed twelve (12%).

b. The acidity range shall be pH 6.0 to pH 7.5 inclusive.

c. Topsoil shall consist of the following percentages of sand, silt and clay. Any soil that does not meet the requirements below will be rejected and removed from the site.

Sand (0.05 to 2 mm)	40% to 75%
Silt (0.002 to 0.05 mm)	15% to 65%
Clay (<0.002 mm)	20% maximum

d. Nutrients: Topsoil test results shall show recommendations for soil additives or fertilizers to correct nutrient deficiencies as necessary. Soil additives and fertilizers shall be incorporated as necessary at the Contractor's expense. Follow the fertilizer recommendation as provided by the required laboratory.

e. Electrical Conductivity: maximum of 1.0 mmhos/cm. A higher level would indicate excessive salt content and material will be rejected and removed from the site.

f. Testing Frequency: The Contractor shall at the direction and discretion of the Engineer, or when quantities exceed one hundred (100) cubic yards, furnish a certified report of the approved Testing Laboratory showing the analysis of representative samples of the topsoil which they propose to use. All samples are to be received by the Engineer and delivered to the laboratory, and the price bid shall include inspection and laboratory charges. Samples shall be submitted 48 hours prior to the delivery of topsoil.

g. No topsoil shall be delivered until the approval of samples by the Engineer, but such approval shall not constitute acceptance. The Engineer reserves the right to reject on or after delivery any material that does not, in their opinion, meet these specifications.

B. Compost: As defined under the item "Compost."

PK-ESCR 753.2.1. SUBMITTALS

A. Testing Laboratory Qualifications: Submit qualifications of Soil Testing Laboratory to be utilized for soil testing, including the resume of the staff anticipated to perform the required

work of the project. Once approved, the contractor shall use the same soil testing laboratory for all testing, unless otherwise approved in writing by the Engineer.

B. Proposed Samples and Test Results: Submit two (2) five pound (5 lb.) bags to the Engineer, with the testing report attached, for approval prior to delivering material to the site.

C. The Contractor shall at the direction and discretion of the Engineer, or when quantities exceed one hundred (100) cubic yards, furnish a certified report showing the analysis of representative samples of the topsoil which they propose to use. Testing shall be performed by the laboratory as approved in writing by the Engineer. Laboratory testing performed more than six months prior to the Contractor's submittal date will be rejected. The testing shall include: pH, organic matter content (loss on ignition method), soluble salt level and soil textural analysis. Price bid shall include all inspection and laboratory fees.

D. No topsoil shall be delivered to the site until the approval of samples by the Engineer, but such approval shall not constitute acceptance.

E. Delivery ticket with name and address of vendor, date, and estimated volume must be supplied to the Engineer prior to truck measurement.

PK-ESCR 753.2.2. QUALITY CONTROL

A. Soil Testing Laboratory: An independent soil testing laboratory with the experience and capability to conduct the testing indicated and that specializes in types of tests to be performed and capable of making soil recommendations, and issuing reports as specified herein, including the ability to make recommendations about soil blending ratios and methods, amendment recommendations, and issuing reports as specified herein.

   a. Verify Testing Laboratories have the experience and capability to conduct the testing indicated and that specializes in types of tests to be performed and capable of making soil recommendations, and issuing reports as specified herein.

   b. Subject to meeting the requirements, the following are acceptable testing laboratories:

      i. Physical and Chemical Testing of Soils:

         1. Rutgers Cooperative Research & Extension Testing Laboratories, New Brunswick, NJ, (848) 932-9295.
         2. Penn State Analytical Services Lab, University Park, PA, (814) 863-0841
         3. McNitt & SerenSoil Testing, LLC, State College, PA, (610) 360-5985.
         4. Turf & Soil Diagnostics – NY, Trumansburg, NY, (855) 769-4231.

PK-ESCR 753.2.3. DELIVERY, STORAGE, AND HANDLING

A. Accessory and Packaged Materials:

   a. Store and handle packaged materials in strict compliance with manufacturer's instructions and recommendations. Protect all materials from weather, damage, injury and theft.

B. Bulk Materials:

   a. Sequence deliveries to avoid delay. On-site storage space is permissible only with written notice from the Engineer. Coordinate material deliveries only after preparations for placement of planting soil have been completed.

b. Stockpile Topsoil without intermixing with other materials.

c. Stockpiled topsoil shall not be placed in mounds greater than six feet high. Provide all means and methods required to prevent anaerobic conditions within stockpiles at no additional cost to the Owner.

d. Place, grade, and shape stockpiles to drain surface water. Cover stockpiles to prevent windblown dust and protect from erosion.

e. Topsoil that is stockpiled on site for more than 24 hours shall be covered with tarpaulin or other soil erosion system acceptable to Engineer. Protect stockpiles from contamination from other materials, from erosion and deposition of water and wind borne materials of any kind.

f. Prohibit vehicular and pedestrian traffic on stockpiled topsoil.

C. Environmental Requirements:

a. Do not deliver handle, mix, haul, or deliver topsoil when excessively dry, wet, or frozen. Topsoil shall not be handled, mixed or hauled when wet, during or immediately after a heavy rainfall. Topsoil should be handled only when the moisture content is less than or equal to the optimum water content. If the topsoil glistens or free water is observed when the topsoil is patted in the palm of hand, the topsoil is too wet and shall not be worked. The Engineer shall determine if the topsoil is too wet to handle.

D. Delivery and Approval:

a. The Contractor shall notify the Engineer a minimum of 48 hours prior to the intended topsoil delivery date. All imported topsoil shall be delivered in trucks and will be subject to visual inspection and additional testing. The topsoil shall NOT be spread until the Engineers' sampling and testing is completed, unless otherwise directed. The Engineer reserves the right to reject any topsoil which does not fall within acceptable limitations of this specification and the initial submittal to design including the approved sample and the approved test report. Where the topsoil is rejected, it shall be immediately removed from the site. Where it has been determined by the Engineer that soil amendments are allowable, the correction shall be made at the Contractor's expense, except as outlined below. Additional testing after amending shall also be at the Contractor's expense. All testing shall be performed by the approved testing laboratory.

b. Engineer's determination based on test results of delivered material: Under no circumstances shall the organic content exceed twelve percent (12%). Should the Engineer's test results of delivered material show organic content greater than twelve percent (12%), the soil shall be rejected and removed from the site. Should test results show pH between pH 5.0 and 6.0, and where directed by the Engineer, limestone may be added at the Contractor's expense to bring the soil to the required minimum pH 6.0. The Contractor will be required to re-test after incorporation of limestone to assure a minimum pH 6.0. Should Engineer's test results of delivered material show a pH greater than 7.5 the soil shall be rejected and removed from the site.

c. The Engineer reserves the right to reject on or after delivery any material that does not, in their opinion, meet these specifications.

d. APPEAL PROCESS: The Engineer shall visually check for discrepancies between the delivered soil and the approved submittal and sample. If the Engineer suspects

that the topsoil delivered to the site has excessively high levels of organic matter, clay, etc. that would not be within the allowable levels listed in this specification, the soil will be rejected until additional testing proves otherwise. Should the Contractor contest the Engineer's determination, the Engineer will take samples so additional tests may be performed at Contractor's expense. Testing shall be performed by the approved testing laboratory. These results shall be considered final.

PK-ESCR 753.2.4. SUPPLIERS

A. Subject to meeting the requirements, the Topsoil material is available from the following suppliers:

   a. Island Topsoil, Syosset, NY

   b. Long Island Compost, Yaphank, NY

   c. Natures Choice, Jersey City, NJ

   d. New York Recycling and Materials, Inwood, NY

   e. Approved equal.

PK-ESCR 753.3. METHODS

A. Preparation of Subgrade: Hollows, depressions, and gullies shall be filled with acceptable material free from stones over two inches (2") in diameter, cinders, rubbish, and other unsuitable material. All surplus material and debris shall be removed and disposed of as directed by the Engineer. Loosen subsoil by scarifying, ripping or tilling using disks, harrows or other suitable equipment to a depth of (4"- 6") immediately before placing any topsoil. Repeat cultivation in areas where equipment used for hauling and spreading topsoil has compacted subsoil.

B. Placement and Spreading of Topsoil: No topsoil shall be handled when, in the opinion of the Engineer, it is too wet. Place and spread approved topsoil in dry weather on dry unfrozen grade. Topsoil for groundcover and herbaceous plant areas shall be mixed with compost in the proportions of seven (7) cubic yards of topsoil to two (2) cubic yards of compost and spread to a compacted depth of nine (9"), or as indicated on the drawings. No deduction shall be made for the volume of compost in the measurement of topsoil quantities.

C. Preparation of Final Grade: Thoroughly cultivate topsoil to minimum depth of (4") by rototilling or hand methods where compaction has occurred and to break up all soil lumps. Hand rake until surface is smooth.

PK-ESCR 753.4. MEASUREMENT

A. The quantity of TOPSOIL FOR PLANTING PITS & BEDS to be paid for under this Item shall be the number of CUBIC YARDS of topsoil furnished, mixed with compost and, placed and incorporated in the completed work in accordance with the plans, specifications, and directions of the Engineer, measured in trucks used for delivery, at the site of the work. No topsoil shall be furnished until ordered by the Engineer.

PK-ESCR 753.5. PRICES TO COVER

A. The contact prices per cubic yard (CY) for Item No. PK-ESCR 753 TOPSOIL FOR PLANTING PITS & BEDS shall cover the cost of all labor, materials, and equipment necessary to prepare topsoil areas, test, furnish, place, and incorporate compost and all other work incidental thereto, in accordance with the plans and specifications, to the satisfaction of the Engineer.

Payment will be made under:

Item No.	Item	Pay Unit
PK-ESCR 753	**Topsoil for Planting Pits and Beds**	**CY**

END OF SECTION

SECTION PK-ESCR 764 – TREE AND PLANTING PROTECTION

PK-ESCR 764.1. INTENT

This section describes the work of providing a Tree and Planting Protection around existing trees and planting beds during construction.

PK-ESCR764.2. DESCRIPTION

The work shall consist of the fabrication, furnishing, installation, erection, maintenance, and subsequent removal and disposal of Tree and Planting Protection around existing trees which are designated to remain.

PK-ESCR 764.3. MATERIALS

All timber shall be Douglas Fir Grade No. 1. Fasteners, such as nails, shall meet the standard industrial fastener specifications for the intended application, and be galvanized in conformance with ASTM Designation A 123.

Plastic Barricade Construction fencing fabric - Color Orange. Manufactured by Allied Products Group, 751 North Bolingbrook Drive, Bldg.16, Bolingbrook, Illinois 60440, or approved equal. Fabric is 5'-0" wide with nominal mesh openings of 1/4"-2” and shall conform to the following requirements:

1. Tensile strength range of 2000 - 2310 P.S.
2. Impact load of 4 to 4.5 foot pounds.
3. Service temperature range between -40 to +200 degrees F.
4. Elongation at break % to be 500%.
5. Weigh per 100' roll to be 30lbs.

PK-ESCR 764.4. METHODS

The Contractor shall construct and install Tree and Planting Protection as shown on the Drawings. All work shall conform with National Design Specifications for Stress Grade Lumber and its fastenings.

All timber at the site of the work shall be stored in piles on supports at least twelve (12”) inches above the ground surface, and so piled as to prevent warping and to shed water. When required by the Engineer, it shall be protected from the weather by suitable covering. The timber shall be close-stacked. The ground under and in the vicinity of all stacks shall be cleared of weeds and rubbish and shall be drained to prevent accumulation of water.

Workmanship shall be first class and only competent carpenters shall be employed. All timber shall be accurately cut and framed to a close fit in such manner that the joints will have even bearing over the entire contact surfaces. No blocking or shimming will be allowed in joints. Timber shall be cut off with a saw; no axe is to be used. Unless otherwise specified, heads of nails and spikes shall be driven with just sufficient force to set the heads flush with the surface of the wood. Deep hammer marks in wood surfaces shall be considered evidence of poor workmanship and sufficient cause for rejection of the pieces affected.

The timber shall be carefully handled, without sudden dropping, breaking of outer fibers, bruising, or penetrating the surface with tools. The timber may be handled with rope slings.

Protective Tree Barriers shall be maintained for the duration of the contract in a condition safe to the public and satisfactory to the Engineer. Upon completion of construction work around the area, all Protective Tree Barriers shall be disassembled, removed and disposed of away from the site.

PK-ESCR 764.5. MEASUREMENT

The quantity of Temporary Wooden Tree Guards to be measured for payment shall be the number of EACH Temporary Wooden Tree Guard actually constructed according to the Contract Drawings, around tree and planting which is to remain, and subsequently removed at each location as directed by the Engineer.

The quantity of Temporary Wooden Tree Guard for Groves to be measured for payment shall be the linear feet of Temporary Wooden Tree Guard for Groves actually constructed according to the Contract Drawings, around tree and planting which is to remain, and subsequently removed at each location as directed by the Engineer.

PK-ESCR 764.6. PRICES TO COVER

The contract price bid per each type of Temporary Wooden Tree Guard shall cover the cost of furnishing all labor, materials, plant, equipment, insurance, and incidentals required to construct, maintain and subsequent removal of the barrier in the locations as directed by the Engineer, in accordance with the Contract Drawings, the specifications, and the directions of the Engineer.

The contract price bid per linear foot of Temporary Wooden Tree Guard for Groves shall cover the cost of furnishing all labor, materials, plant, equipment, insurance, and incidentals required to construct, maintain and subsequent removal of the barrier in the locations as directed by the Engineer, in accordance with the Contract Drawings, the specifications, and the directions of the Engineer.

Payment will be made under:

Item No.	Item	Pay Unit
PK-ESCR 764 A	**TEMPORARY WOODEN TREE GUARD**	**EA**
PK-ESCR 764 B	**TEMPORARY WOODEN TREE GUARD FOR GROVES**	**L.F.**

END OF SECTION

SECTION PK-ESCR 781 – ITS SINGLE MODE, FIBER OPTIC CABLE, 12 STRAND

SECTION PK-ESCR 782 – ITS SINGLE MODE, FIBER OPTIC CABLE, 48 STRAND

SECTION PK-ESCR 783 – ITS SINGLE MODE, FIBER OPTIC CABLE, 48 STRAND, REDUCED OD, HIGH FLEXIBLE TYPE

SECTION PK-ESCR 784 – ITS SINGLE MODE, FIBER OPTIC CABLE, 216 STRAND

GENERAL:

Under this item, the contractor shall furnish and install new, single mode (SM) fiber optic cable used for the NYC DOT ITS communications backbone, distribution network and equipment drops, include all passive components and miscellaneous equipment as necessary for a complete cable plant as shown in the plans and/or as directed by the Engineer.

Backbone, data distribution and equipment drop cables refer to the functional applications of the fiber optic cable, as defined below, and not the type/ratings of fiber cable.

The quantity and types of fibers contained in each cable shall be in accordance with the plans.

The fiber optic cables will be used in harsh overhead and underground environments within NYC for Traffic control, ITS and outdoor general structure to structure fiber communications. The cable shall be rated for outdoor (outside plant), in-conduit use, direct burial and for exposed environment wherever exposed to UV rays. The cables shall be rodent resistant.

Materials:

Single mode fiber optic cable shall incorporate a water swellable tape, loose buffer tube cable design.

Fiber optic cable shall be suitable for installation in conduit in an outside or underground urban cable plant environment.

The fiber optic cable shall be all dielectric type.

The fiber cable shall meet the requirements of the United States Department of Agriculture Rural Utility Service 133A.3.2.(RUS) 7 CFR1755.900, the requirements of ANSI/ICEA Standard for Fiber Optic Outside Plant Communications Cable, ANSI/ICEA S-87-640-1999, TIA/EIA FOTP Standards 455 and UL 1666 standard minimums.

Fiber Optic cables shall be new, unused and of current design and manufacturer.

The ITS Fiber Cable Manufacturer shall be the approved NYC DOT – Signals ITS fiber cable manufacturer:

Prysmian Group – General Cable US
North American Headquarters
4 Tesseneer Drive
Highland Heights, KY 41076

ITS Fiber Cable series:

Express LT (Gel Filled, Dielectric, Rodent resistant)

Reduced diameter, Bend-Optimized, Gel filled, ITS Fiber Optic cable, where required, shall be:

Single mode, Compact, single jacket solution for Outside Plant use. Cable shall be multi-purpose, loose tube cable offering a 19% reduction in diameter and 30% reduction in weight

over standard loose tube designs while meeting or exceeding RUS/RDUP, GR20, G.652.D SSMF and G.657.A2. industry standards.

The reduced diameter fiber cable shall be of the type designed to reduce the cable bend radius for flexible use in tight spaces such as smaller pedestals, hand holes and for improved cold temperature performance. The reduced diameter fiber cable shall have dual rip cords for easy jacket removal.

Optical Requirements:

This specification contains minimal design and test values for all-important mechanical, optical, and environmental parameters and as such, is the basis for all incoming inspection and acceptances.

The optical fibers shall meet the requirements of EIA/TIA-492CAAB "Detail Specifications for Class IVa Dispersion-Unshifted Single Mode Optical Fiber Cable with Low Water Peak" and ITU recommendation G.652.D, "Characteristics of Single-Mode Optical Fiber Cable".

Maximum attenuation at:

1310 nm	0.4 decibels/kilometer
1383 nm	0.4 dB/km
1550 nm	0.3 dB/km
1625 nm	0.3 dB/km

Fiber attenuation shall be uniform with no discontinuities greater than 0.05 dB at 1,310 nm and 1,550 nm.

The attenuation measurements shall be in accordance with the latest revisions of EIA/TIA 455 Standards FOTP-20, 59, 61 and 78. The average change in attenuation at extreme operational temperatures (-40° C to 70° C [-40º F to 158º F]) shall not exceed 0.05 dB/cm at 1,550 nm. The magnitude of the maximum attenuation change of each individual fiber shall not be greater than 0.15 dB/km at 1,550 nm. The change in attenuation measurements shall be in accordance with EIA/TIA Standard FOTP-3.

Fiber macro bending attenuation shall not exceed the following under the stated conditions:

Condition	Wavelengt	Maximum
1 turn, 32±2 mm OD mandrel	1550 nm	0.50 dB
100 turns, 50±2 mm OD	1310 nm	0.05 dB
100 turns, 50±2 mm OD	1550 nm	0.10 dB
100 turns, 60±2 mm OD	1550 nm	0.05 dB
100 turns, 60±2 mm OD	1625 nm	0.05 dB

Water immersion at 23º C ±2º C:	≤ 0.5 dB/km at 1,310; 1,550 and 1,625 nm
Cutoff Wavelength:	≤1260 nm.
Mode-Field Diameter:	9.2 ±0.4 nm at 1,310 nm. 10.4±0.5 nm at 1,550 nm.
Zero Dispersion Wavelength:	1,312±10 nm.
Zero Dispersion Slope:	≤0.092 ps/(nm*km).
Total Dispersion:	≤3.5 ps/(nm*km) at 1,285-1,330 nm.
	≤18 ps/(nm*km) at 1,550 nm.
	≤22 ps/(nm*km) at 1,625 nm.
Polarization Mode Dispersion:	≤0.2 ps/(nm*km).

Mechanical Requirements:

Optical Fiber strands:

All optical fiber strands shall be: Corning SMF-28, Draka-BendBright™ or Prysmian OneSpec™ brand, single mode type or Engineer and NYC DOT Signals approved equivalent manufacture.

All glass fiber strands within a given cable shall be from the same manufacturer and shall contain no factory splices.

Each fiber shall conform to the following minimum requirements:

- Typical Core Diameter: 8.3 nm
- Cladding Diameter: 125.0±1.0 nm
- Core-to-Cladding Concentricity: ±0.8 nm
- Cladding Non-Circularity: ±1.0%

Fiber Cables - Delivery Requirements:

Fiber cables shall be delivered, curbside, shipped on new, un-damaged, wood or reusable steel reels, without any splices.

Three (3) meters of each end of the fiber cable shall be accessible for testing upon receipt at the Contractor's facility and again immediately prior to installation/placement.
Both ends of the fiber cable shall be sealed to prevent moisture ingress.

A durable weather resistant tag or label on each reel shall contain the following information:

- Manufacturer's name.
- Cable type.
- Length of cable contained on the reel in meters and feet.
- Cable reel serial number.

Attached to the reel, in a weather resistant envelope, shall be the detailed reel shipping record. The shipping record shall contain the following, in addition to the above information:

- Date of manufacture.
- Date cable tested.
- Cable characteristics (size, attenuation for each fiber).
- Cable reel serial identification number.

Fiber Optic-Connectors:

Fiber Optic Connectors shall be furnished and installed incidental to the cost of installing fiber optic cables. The connectors shall be factory installed. Field installation of fiber connectors shall only be permitted with the express consent of the Engineer and field connectorization will be considered on a case by case basis.

Fiber Optic connectors shall meet the following requirements:

- Corning UniCam® Type ST, twist lock (bayonet). Blue Color-coded boot
- Ceramic ferrules
- Single Mode (OS/2)
- Fiber secured within the ferrule with epoxy, as specified by the connector or epoxy manufacturer.
- Operating Temperature: -20º C to +70º C
- Low Insertion loss: 0.5 dB maximum
- Return loss: 55 dB minimum
- Field installable, Pretium® Performance

- Factory Polished
- 9/125 µm Fiber

Construction:

ITS Cable-General:

All fibers in the fiber optic cables shall be spliced, terminated, or both within the field cabinets, splice cases, signal patch and splice points and pull boxes, as designated in these contract documents and/or as directed by the Engineer.

The Contractor shall furnish all equipment, specialty test instruments and qualified fiber optic splicing technicians, as required for the installation, termination, testing and commissioning of the fiber optic cables.

The Contractor shall provide all passive components required to form a complete cable plant including, but not limited to, connectors and breakout kits, supports and ancillary components required for the installation of the cable plants including terminators, attenuators, moisture and water sealants, fiber approved lubricant, identification tags, cable end caps and cable management devices such as devices for the support and racking of slack fiber cable.

The components supplied shall be commercially available, state-of-the-art components, suitable for this application.

The backbone, distribution and drop optical fiber cable designations used in the plans indicate the function and strand counts of the fibers contained in the cable and not necessarily the type of cable.

Backbone fiber carries critical NYC DOT ITS backbone data and video between end points, hubs, active hubs and the Joint Traffic Management Center (JTMC).

Distribution fiber carries video from CCTV installations and data from field end point devices to hubs.

Drop fiber connects field end point devices for aggregation up to the distribution/backbone optical fiber cable.

Preinstallation Requirements:

The Contractor shall be entirely responsible for the fiber optic cable security, quality and adherence to these specifications, from its manufacture to the time the network is accepted by the Engineer.

Prior to installation of the cable, the Contractor shall submit a written Fiber Cable Installation Plan. The Install Plan shall be submitted to the Engineer for approval, at least sixty (60) days prior to the date the fiber installation work is to begin. The plan shall include an itemized work Method of Procedure (MOP) and written proof of appropriate training for all personnel who will be installing, terminating and testing the fiber system.

Cable Plant - Design Submission:

The Contractor shall also submit a detailed Fiber Cable Plant - Design Submission in working shop drawing format to the Engineer for approval. The Engineer shall have thirty (30) working days to review this submission. The design submission shall include the following:

1) Catalog cuts (TDS) and associated shop drawings for all cable, connectors, splice equipment, splice enclosures, splice trays, Patch panels, cable installation and test equipment in adequate detail to verify compliance with the specifications.

2) Manufacturer's recommended cable installation techniques such that the optical and mechanical characteristics of the cables are not degraded at the time of installation. The proposed installation methods shall be on site (field) reviewed by a qualified fiber technician of the cable manufacturer. The installation review recommendations shall include the following:

   a) Cable manufacturer's approved cable pulling lubricants for use on the cable and the intended method of lubricant application. Lubricants which are not factory approved will not be permitted.
   b) Cable Placement Installation set-up and pull plans, including sizes, types and location of fiber rollers, feeder guides, tension gauge (make and model number), attachment of pulling jig to fiber jacket, direction and length of each pull.
   c) Maximum cable pulling tensions, which shall specify both pulling effort from the cable conductors and for pulling solely from the outer jacket. Pulling tension worksheets shall be tabulated, reviewed and submitted by a qualified manufacturer's service technician or by a Professional Engineer who is experienced in outdoor fiber optic placement and who is licensed to practice in NY State.
   d) Minimum bending radii, shall be specified in minimum bend radius for both the installation and for long term installation.
   e) Method and equipment to pull multiple cables.
   f) Method / materials to seal unterminated cables against water ingress.
   g) Proposed splice locations and amount of slack proposed for each splicing location. This shall be shown by line diagrams using AutoCAD program file submissions.
   h) The CAD layout and splice detail drawings shall be laid out on ANSI D size sheets and printed on 11"x17" B size sheets.
   i) Splice material manufacturer's recommended procedures for installation of the splices and to test field configured enclosures.
   j) Submit expected attenuation between end points of all fibers.
   k) Including in the attenuation calculation submission shall be all expected losses resulting from cable, splices and connectors.
   l) No fiber optic cable shall be installed until each of the items listed above have been submitted, reviewed and approved by the Engineer.

Cable Cross Section (Representation of standard construction):

Cross Section	Components
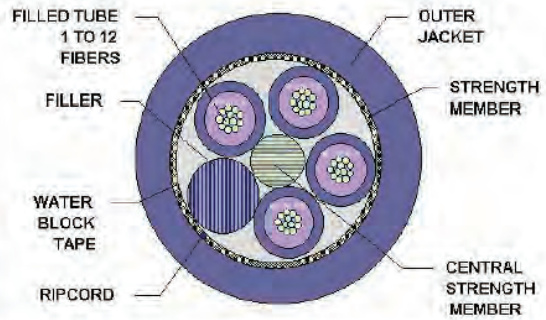	Central Member Water Swellable yarns Gel Filled Loose Tube Filler Rod Binder Threads Water Blocking Core Tape Strength Elements Ripcord Outer Jacket

Overall Cable Construction:

Buffer tube: High Modulus Polymeric material.

Dimension: 2.8 mm, nominal.

Tube and fiber color code per EIA/TIA-598

Filling Compound non-toxic and dermatological safe antioxidant hydrocarbon-based gel.

Dielectric Central strength member (CSM) with water swellable yarns.
An up-coat of polymer (if necessary, per construction)

Cable Core: The cable elements are stranded around the CSM, using reverse oscillation.

Moisture Resistance: A water blocking tape is applied over the cable core to prevent water ingress and migration with a nominal of 25% overlap.

Non-wicking binder yarns are applied over the core tape.

Cable Strength: Circumferential strength members are placed over the cable core and under the outer sheath.

Outer Sheath: UV Resistant, Black, Riser Rated PVC or HDPE.

A ripcord is applied under the outer sheath.

ITS Fiber Cable Markings:

Indent printed type - Manufacturer name, NYC DOT ITS FIBER OPTIC CABLE, # of fibers-fiber type, TELEPHONE HANDSET SYMBOL, MM/YY (Month & Year of manufacture), OFNR, NRTL LISTING, sequentially foot marked.

Nominal Cable Dimensions & Weights:

No. of Fibers	No. of Fibers per Tube	Cable OD (mm)	Cable OD (in.)	Weight KG/KM
6	6	11.3	.443	122
8	8	11.3	.443	122
12	6	11.3	.443	120
12	12	11.3	.443	122
16	8	11.3	.443	120
18	6	11.3	.443	118
24	6	11.3	.443	116
24	12	11.3	.443	120
30	6	11.3	.443	114
36	6	12.0	.473	133
36	12	11.3	.443	118
48	6	13.9	.548	173
48	12	11.3	.443	116
60	12	11.3	.443	114
72	12	12.0	.473	132
84	12	13.0	.513	151
96	12	13.9	.548	172
108	12	15.1	.593	204
120	12	16.0	.628	232
132	12	16.8	.663	260
144	12	17.7	.698	291
192	12	17.9	.704	251
216	12	18.6	.734	277
288	12	21.4	.844	364

Fiber Characteristics:

Maximum Attenuation @ 1310/1550nm	.35/.25 B/km
Core Diameter, nominal	8.3 µm
Cladding Diameter	125.0 ± 1.0 µm
Primary Coating Diameter	245 ± 10 µm
Maximum Dispersion Slope	0.092 ps/nm^2-km
Fiber Cutoff Wavelength	1,150-1,350nm
Cabled Cutoff Wavelength	<1260nm
Mode Field Diameter @ 1,310nm	9.2 ± 0.4µm
Mode Field Diameter @ 1,550nm	10.5 ± 1.0µm
Cladding Non-circularity	<1%
Core/Clad Offset	□.80 µm
Zero Dispersion Wavelength	1,300-1,322nm
Numerical Aperture	0.13
Group Refractive Index @ 1,310/1,550nm	1.467/1.4675
Proof Test	100 kPSI

TIA/EIA-598 Optical Fiber Cable Color Coding:

The fiber optic cable color code is based on the 10 TIA colors that are used for plastic insulated conductor copper. Two more colors (Rose and Aqua) have been added to bring the optical fiber color code to 12.

The following fiber color code is for 12 fiber strands.

Fiber	Color Code	Color
1	blu	
2	orange	
3	gree	
4	brow	
5	slat	
6	whit	
7	red	
8	blac	
9	yello	
10	viole	
11	ros	
12	aqu	

For cables that consist of more than 12 strands, the color code repeats itself.

Each group of 12 strands is identified with some other means such as:

> Multiple buffer tubes each with 12 or less strands either numbered or colored following the same color code, e.g., 1st tube is blue, 2nd is orange, etc.

24 strand groups with the color code repeating with some variation, e.g., the 1st group of 12 strands are solid colors and the 2nd group are solid colors with a stripe or some other identifying mark.

Preparation for Cable Delivery:

The fiber optic cables shall be packaged to preclude the inducement of damage due to handling and transportation, and cable reel put ups shall be in accordance with the best commercial practices available.
Manufacturer's (source) Quality Assurance:

Each cable reel shall be tested immediately prior to shipment. The manufacturer's test shall be using a calibrated Optical Time Domain Reflectometer (OTDR).

The cable manufacturer shall certify that each reel of fiber cable that is furnished meets or exceeds the following test requirements as defined in EIA/TIA-455B "Standard Test Procedures for Fiber Optic Fibers, Cables, Transducers, Sensors, Connecting and Terminating Devices and Other Fiber Optic Components" Fiber Optic Test Procedures (FOTP):

Fluid Penetration: When tested in accordance with FOTP-82, a one (1) meter length of unaged cable shall withstand a one-meter static head or equivalent continuous pressure of water for one hour without leakage through the open cable end.

Filling Compound Flow: When tested in accordance with FOTP-81, the fiber cable shall exhibit no flow (drip or leak) of filling or flooding compound at 70° C.

Compressive Load: The cable shall withstand a minimum compressive load of 22 N/mm applied uniformly over the length of the sample. The cable shall be tested in accordance with FOTP-41, with the load applied at the rate of 2.5 mm/minute. The load shall be maintained for one minute and then decreased to 11 N/mm. The 11 N/mm load shall be maintained for 10 minutes. The magnitude of the attenuation change at 1,550 nm shall not exceed 0.4 dB prior to release of the 11 N/mm load. The repeatability of the measurement system is typically 0.05 dB or less. No fibers shall exhibit a measurable change in attenuation after load removal.

Tensile Loading and Bending: When tested in accordance with FOTP-33, using a maximum mandrel and sheath diameter of 560 mm the cable shall withstand a tensile load of 2,700 N. The change in attenuation shall not exceed 0.2 dB during loading and 0.1 dB after loading at 1,550 nm.

Low or High Temperature Bending: When tested in accordance with FOTP-37, the cable shall withstand four full turns around a mandrel of $\leq$ 10 times the cable diameter after conditioning for four hours at test temperatures of -30º C to 60º C. Neither the inner nor outer surfaces of the jacket shall exhibit visible cracks, splits, tears or other openings.

Optical continuity shall be maintained throughout the test.

Impact Resistance: When tested in accordance with FOTP-25, the cable shall withstand 25 impact cycles. The change in attenuation shall not exceed 0.2 dB at 1,550 nm. The cable jacket shall exhibit no cracking or splitting upon completion of the test.

Cable Flexibility: When tested in accordance with FOTP-104, the cable shall withstand 25 mechanical flexing cycles at a rate of 30" per cycles per minute with a sheath diameter not greater than 20 times the cable diameter. The fibers shall not experience an attenuation change greater than 0.1 dB at 1,550 nm. The cable jacket shall exhibit no cracking or splitting when observed under five times magnification.

Temperature cycling: When tested in accordance with FOTP-3, the change in attenuation at extreme operational temperatures (-40º C to 70º C) shall not exceed 0.2 dB/km at 1,550 nm.

Cable Twist: When tested in accordance with FOTP-85, a length of cable no longer than 4 meters shall withstand 10 cycles of mechanical twisting. The change in attenuation shall not exceed 0.1 dB at 1,550 nm.

The Manufacturer shall submit a plan for source QA/QC with the associated Technical Data Sheet (TDS) submission, for each cable type.

Reel by reel manufacturer's certificates of QA/QC shall include the actual end to end OTDR test results, test certificates shall be signed, dated and transmitted to the NYC DOT ITS project manager for use in site acceptances, as well as for the permanent optical cable performance record. Test certification documents shall be submitted prior to site inspection acceptance and cable placement activities. Manufacturer documents shall be provided within 10 days of the date of each manufacturer's shipment.

Manufacturer's Shipping Certification:

The following tests shall be performed, and the results documented for fiber cables meeting the requirements herein.

Prior to shipment from the factory: each fiber cable shall be OTDR attenuation tested, at both 1,310 nm and 1,550 nm with a calibrated test unit.

Fiber Technicians - Experience Requirements:

All Personnel involved in the installation, splicing, termination, and testing of the fiber optic cables shall submit proof of meeting the following experience requirements:

1) A minimum of five (5) years of experience in the installation of fiber optic cables, including fusion splicing, terminating and testing of single mode outside plant fibers.
2) Experience in installing at least five (5) systems where fiber optic cables are outdoors in conduit or underground in metropolitan duct banks. The systems submitted for reference shall have been in continuous satisfactory operation for at least two (2) years.
3) The Contractor shall submit individual resumes of all field personnel listing their names, fiber projects worked on and the names and telephone information for references who can be contacted regarding the individuals experience in installing large city wide fiber optic systems.

All Personnel shall also meet the following requirements:

1) Fiber Splicers and terminating technicians shall have been trained and certified in fiber optic splicing procedures by the manufacturer of the specific fiber splice and connector materials to be used on this project.
2) Fiber cable installers shall have been formally trained and certified in the correct fiber optic cable installation, pulling, placement and handling procedures by the manufacturer of the fiber optic cable to be used.

3) Personnel involved in fiber optic testing shall have been trained and certified by the manufacturer of the fiber optic cable test equipment (OTDR) to be used, and in fiber optic cable testing and reporting procedures.

4) Proof of the appropriate trainings shall be submitted, in writing to the Engineer for approval, a minimum of thirty (30) working days prior to start of cable installation.

Fiber Installation Requirements:

All fiber optic cable installed underground shall be placed in conduit or duct banks. No direct burial of cables will be permitted. The cables shall be installed as shown in the plans and in accordance with the approved cable plant installation plan.

Each existing conduit or duct bank to be occupied shall be rodded and roped with 1,200# rated mule tape to verify the intended new cable route, LOA distance and proven, obstruction free passage.

New 1.0" ID color coded innerducts shall be emplaced wherever fiber cable is to be run thru conduits or duct banks. Innerducts shall be run continuously thru existing manholes and pull boxes.

Show pullbox/manhole ID, slack loop and fiber cable length allowances for each manhole or pull box. Color coded innerducts are provided under a sperate payment item.

The Contractor shall furnish and install all incidental hangers, connections, equipment, and accessories as required to provide a complete and functional metropolitan ITS fiber-based communications plant. Include all related components as specified under this contract and coordination with any incidental equipment, as supplied by others.

All work shall be done in compliance with the latest published edition of NFPA 70 National Electrical Code (NEC) including the NYC Electric Code amendments to the NEC.

Fiber optic cable shall be installed in strict accordance with the approved manufacturer's recommendations and under the direct supervision of a qualified cable technician(s).
In addition, the following installation requirements shall also be met:

1) The identification, sizes, number of pullboxes and their final locations shall be as shown on the plans.

2) The Contractor may be required to install the cable in one pullbox at a time. The direction of each cable pull shall be documented, calculated and determined by the Contractor and shall require the approval of the Engineer.

3) The field cable installation shall be in strict accordance with the approved Cable Placement Installation set-up and pull plans.

4) A minimum of 30 m (100 Ft) of fiber cable slack, or less, as approved by the Engineer, shall be provided in pullboxes or manholes containing splices for the fiber cables to be spliced or as otherwise designated on the plans, and/or as directed by the Engineer. Additional fiber slack, as indicated on the approved Cable Placement installation plan, may be required for closure preparation and splicing.

5) Drip loops shall be provided for aerial fiber installations and shall be formed in accordance with the fiber manufacturer's written recommendation.

6) No fiber optic cable shall be pulled through the equivalent of more than one 90 degree bend unless so indicated on the approved Cable Placement plans or is specifically approved by the Engineer.

7) Fiber cables shall not be pulled over pullbox or manhole edges or corners, over or around obstructions, or through unnecessary curves or bends.

8) Fiber cables shall be looped in and out of cabinets, manholes and pull boxes to provide adequate slack, gradual bends and shall exert the least amount of stress on the fibers.

9) The Contractor shall ensure that the fiber cable is not damaged during storage, pulling or installation.

10) Fiber optic cable ends shall be kept sealed at all times during installation, using a method recommended by the cable manufacturer and approved by the Engineer. Close fitted removable caps that match the cable OD are preferred.

11) Fiber cable ends shall remain sealed until the Contractor terminates the fiber cables. Cables that are not immediately terminated shall have a minimum of two meters (7 feet) minimum of slack.

12) When using fiber pulling lubricants, the Contractor shall adhere to the cable manufacturer's requirements for the proper type, amount, application tools and methods. The contractor shall be responsible for the cleaning and removal of all lubricant from the exposed fiber jacket and enclosures.

13) Optical fiber cables shall be installed in continuous lengths without any intermediate splices throughout the project except where splices are specified and indicated on the approved Cable Placement submission and/or as approved by the Engineer.

14) Fiber Splices shall only be made in watertight, re-enterable splice enclosures. Splice enclosures shall match the splice type (butt type or butt run with tap) and shall be mounted in pullboxes, junction boxes, signal cabinets and where permitted in underground manholes or vaults.

15) Fiber optic drop cables shall be spliced to either the backbone or distribution cable at the locations indicated on the approved Cable Placement Installation plans and/or as directed by the Engineer.

16) The maximum fiber pulling tensions and minimum bending radii shall not be violated at any time during installation. The Contractor shall consult with the Engineer concerning the routing via any existing conduit, pullboxes, duct banks or risers, which could force the violation of the minimum bending radius for each size/OD of fiber optic cable. The Contractor shall document, submit and obtain approval from the Engineer if any modifications to the existing facilities are required. Violation of the pulling, minimum radius or installation parameters shall be cause for rejection of the installed cable.

17) Prior to any installation of cable, the Contractor shall rod, clean and rope (mule tape) each existing conduit in accordance with the requirements of the specification provisions.

18) Slack fiber and innerducts, where pulled through a pullbox, vault or manhole shall be racked to the enclosure wall.

19) All optical fibers shall be spliced where indicated to provide continuous runs. Where a fiber distribution/backbone fiber is spliced to a drop fiber, the distribution/backbone fiber beyond the splice point shall be a continuous fiber length to the end of the optical cable run.

20) Prior to any splicing or fiber termination the Contractor shall test each fiber of the installed optical cable for signal continuity, anomalies (events above 0.3 dB) and

individual fiber attenuation using a calibrated Optical Time Domain Reflectometer (OTDR), testing at wavelengths of 1,310 nm and 1,550 nm.

Fiber Termination Requirements:

The aggregate connector loss for complete connections to the terminal equipment shall not exceed a mean of 0.5 dB. No individual connector losses above 1.0 dB will be permitted. Connectors shall be qualified and accepted on the basis of connector-to-connector mating, using similar fibers. Unused (dark) optical fiber cables shall be properly terminated, tested and protected with sealed end caps.

Fiber Testing Requirements (Fiber Optic Cable Installation-Site Acceptance Tests):

All optical fiber links, including all dark/spare fibers, shall undergo the below acceptance tests after installation of fiber connectors and splices.

A fiber link is defined as: a continuous length of fiber including all splices and connectors and for fibers broken by an intermediate splice to a drop cable; the length of fiber from the break to each end.

The Contractor shall provide all connectors, calibrated fiber jumper cords, adapters and splices necessary to perform the required field validation of performance-based tests:

1) Using a calibrated OTDR test each link in both directions at 1,310 nm and 1,550 for fiber attenuation, continuity, length, and anomalies.
2) Each optical fiber shall meet the following acceptance criteria:
    a) Attenuation: Average for both directions shall not exceed 0.4 dB/km + 0.1 dB/splice + 0.5 dB/connector. The number of splices and cable attenuation shall be based upon the approved Fiber Cable Installation plan.
    b) Anomalies: No event shall exceed 0.3 dB. If any event is detected above that value, the Contractor shall repair or replace that entire section of fiber cable. A section of fiber is defined as the length of fiber cable between two adjacent splices, termination (patch) panels or a splice and a termination (patch) panel.
3) Using an optical source and a calibrated optical power meter measure the attenuation from both ends. The measured attenuation shall be meet the criteria defined for the attenuation using the OTDR.
4) Any fiber cable that fails to meet any of the testing requirements shall be replaced.
5) The Contractor shall submit to the Engineer a tabulated list of all fibers and the actual end-to-end measured values from the above tests. OTDR results shall obtained by a qualified technician with calibrated instruments and shall utilize the same instrument, calibration from test to test. The report of field acceptance testing shall be organized, by each link and each link shall be permanently identified by specified cable ID markers at each point. Link groupings, for each cable, shall include the To/From cable foot marks for validation of link lengths (LOA).
6) The field test reports shall include graphic depictions of all traces and loss length printouts.
7) Each fiber cable shall be listed according to the, cable ID, final strand ID, color code and link ID.
8) The Contractor's submission of accurate and validated field performance test data and its approval, by the Engineer, shall be the basis of acceptance for the fiber.

Record Documentation Requirements:

1) Five (5) complete sets of Installation, Operation and Maintenance (IOM) manuals shall be provided.
2) IOM Manuals shall be loose-leaf bound, in rugged, 3 ring binders, with insertable front and splines.
3) IOM Manuals shall have Machine Printed, Tabbed, reinforced section dividers and a Table of contents.
4) IOM Manuals shall also be provided in electronic format, as searchable PDF files, submitted on CD/DVD media. PDF files shall include a PDF Table of Contents with bookmark links matching the hard copy.
5) The IOM manuals shall, as a minimum, include the following sections:

    a) Complete and accurate as-built diagrams showing the installed fiber optic cable plant, the lengths of each link segment, the cable identification schedules, the slack provided and the final locations and counts of all splices and terminations.

    b) Complete performance data from the in-place Fiber Optic Cable Testing, for each link, including the OTDR trace graphic plots and attenuation measured, with the optical source and power meter. Dark fibers shall include in place connectors (end to end). Active fibers shall include End to End OTDR data with (1) patch loss at either end - identify the tested patch values used.
    OTDR Test report identification shall closely match the As Built Cable, breakout group and fiber strand identifications.

    c) Factory QA/QC submissions including manufacturer's QC reports and on-reel OTDR Test reports, tested before shipping.

    d) Contractor shall provide OTDR tests of new, on reel, FO Cables on arrival at the Contractor's storage warehouse facility (tested before installation)

    e) Approved (stamped) copies of the Fiber Optic Material submissions (TDS)

    f) Approved (stamped) copies of the Cable Installation Plans; including detailed splicing, terminating and testing procedures.

    g) As built copies of the end-to-end ITS fiber pulling plans - including planned and actual pulling tension reports, site plans, including all changes, conduit and underground duct occupancies and corrected as built location/ survey data.

    h) Complete Parts List / Bill of Materials including names of manufacturers, part numbers and local vendors.

    i) Cable Identification and splice / patch elevation details. Include FOC circuit callouts, as patched for each endpoint, splice, tap and patch location.

    j) Complete ITS Fiber Cable network maintenance and trouble-shooting procedures.

Mechanical Requirements:

Maximum Tensile Load for: Installation	2,700 N / 607 lbs.
Maximum Tensile Load for: Long Term	890 N / 200 lbs.
Minimum Bend Radius: Loaded	20 X OD
Minimum Bend Radius: Un-Loaded	10 X OD

Crush Resistance:	220N/cm (1.663 ft/lbs.)
Flexing, ±90°:	25 Cycles (min.)
Twist Test:	25 Cycles (min.)
Temperature Rating: Operation	-40° C to 70° C
Temperature Rating: Installation	0° C to 30° C
Temperature Rating: Storage	-40° C to 70° C

Material:

Hardware-Fasteners:

All external screws, nuts, bolts and locking washers shall be stainless steel; no self-tapping or Tek screws may be used, unless specifically approved by the Engineer. All screws, nuts, bolts and locking washers used shall be of corrosion resistant material, or Stainless Steel to resist corrosion.

Pole line hardware for aerial applications, shall be hot dipped galvanized type.

All material furnished shall be new, first commercial quality, and used in accordance with the highest industry practices.

METHOD OF MEASUREMENT:

Each linear foot of ITS Single Mode Fiber Optic Cable will be measured based on the furnished, installed and acceptance tested cable, in-place measurement, in accordance with the Contract Documents and/or as directed by the Engineer.

BASIS OF PAYMENT:

The price bid per linear foot of ITS Single Mode Fiber Optic Cable shall include the cost of furnishing all labor, materials, mounting, hardware, connectors, splices, related equipment and performance tests necessary to complete the work.

Item No.	Item Description	Pay Unit
PK-ESCR 781	ITS SINGLE MODE, FIBER OPTIC CABLE, 12 STRAND	LINEAR FOOT
PK-ESCR 782	ITS SINGLE MODE, FIBER OPTIC CABLE, 48 STRAND	LINEAR FOOT
PK-ESCR 783	ITS SINGLE MODE, FIBER OPTIC CABLE, 48 STRAND, REDUCED OD, HIGH FLEXIBLE TYPE	LINEAR FOOT
PK-ESCR 784	ITS SINGLE MODE, FIBER OPTIC CABLE, 216 STRAND	LINEAR FOOT

END OF SECTION

SECTION PK-ESCR 785 – ITS SINGLE MODE, FIBER OPTIC CABLE, 48 STRAND, SELF-SUPPORTING, AERIAL DROP TYPE

GENERAL:

Under this item, the contractor shall furnish and install new, single mode (SM) fiber optic cable used for the NYC DOT ITS communications aerial and temporary use equipment drops, include all passive components and miscellaneous equipment as necessary for a complete cable plant as shown in the plans and/or as directed by the Engineer.

Equipment drop cables refer to the functional applications of the fiber optic cable, as defined below, and not the type/ratings of fiber cable.

The quantity and types of fibers contained in each cable shall be in accordance with the plans.

The fiber optic cables will be used in harsh overhead environments within NYC for Traffic measurement-control, ITS, CCTV and outdoor general structure fiber communications. The cable shall be rated for outdoor (outside plant) use, suitable for self-supporting installations, where in weather exposed environments and where subject to UV rays. The cables shall be Figure-8, steel messenger type design which allows easy, one-step aerial cable installation, using standard pole line hardware and cable supports.

Materials:

Single mode fiber optic cable shall incorporate a gel free, fully water blocked design using craft friendly water swellable tape and loose buffer tube cable design.

Fiber optic cable shall be suitable for aerial installation in an outside urban cable plant environment.

The fiber optic cable shall be all dielectric type, except for the conductive, steel messenger supporting strand.

The fiber cable shall meet the requirements of: the United States Department of Agriculture Rural Utility Service 133A.3.2.(RUS) 7 CFR1755.900, the requirements of ANSI/ICEA Standard for Fiber Optic Outside Plant Communications Cable, ANSI/ICEA S-87-640-1999, TIA/EIA FOTP Standards 455 and UL 1666 standard minimums.

Fiber Optic cables shall be new, unused and of current design and of current product manufacture.

Fiber Cable Manufacturer shall be approved by NYC DOT – Signals. Approved manufacturers are:

Corning Optical Communications, 4200 Corning Place, Charlotte, NC 28216, or Prysmian Group North America – General Cable, 4 Tesseneer Drive, Highland Heights, KY 41076.

Fiber Cable series:

Corning - ALTOS® Figure-8, Loose Tube, Gel-Free, 48 strand, SM OS2, Prysmian – Telecom Single mode, Aerial, 48 strand, SMF-28 Ultra Fiber (OS2), or other manufacturers which are demonstrated to provide equivalent performance fiber optic cables, which shall be manufactured in USA, as approved by the Engineer.

Optical Requirements:

This specification contains minimal design and test values for all-important mechanical, optical, and environmental parameters and as such, is the basis for all incoming inspection and material acceptances.

The optical fibers shall meet the requirements of EIA/TIA-492CAAB “Detail Specifications for Class IVa Dispersion-Unshifted Single Mode Optical Fiber Cable with Low Water Peak” and ITU recommendation G.652.D, “Characteristics of Single-Mode Optical Fiber Cable”.

Maximum attenuation at:

Wavelength	Maximum Attenuation
1310 nm	0.4 decibels/kilometer (dB/km)
1383 nm	0.4 dB/km
1550 nm	0.3 dB/km

Fiber attenuation shall be uniform with no discontinuities greater than 0.05 dB at 1,310 nm and 1,550 nm.

The attenuation measurements shall be in accordance with the latest revisions of EIA/TIA 455 Standards FOTP-20, 59, 61 and 78. The average change in attenuation at extreme operational temperatures (-40° C to 70° C [-40º F to 158º F]) shall not exceed 0.05 dB/cm at 1,550 nm. The magnitude of the maximum attenuation change of each individual fiber shall not be greater than 0.15 dB/km at 1,550 nm. The change in attenuation measurements shall be in accordance with EIA/TIA Standard FOTP-3.

Bending Attenuation:

Fiber macro bending attenuation shall not exceed the following under the stated conditions:

Bend Condition	**Wavelength**	**Maximum**
1 turn, 32±2 mm OD mandrel	1550 nm	0.50 dB
100 turns, 50±2 mm OD mandrel	1310 nm	0.05 dB
100 turns, 50±2 mm OD mandrel	1550 nm	0.10 dB
100 turns, 60±2 mm OD mandrel	1550 nm	0.05 dB

Water immersion at 23º C ±2º C:	≤ 0.5 dB/km at 1,310; 1,550 and 1,625 nm
Cutoff Wavelength:	≤1260 nm.
Mode-Field Diameter:	9.2 ±0.4 nm at 1,310 nm. 10.4±0.5 nm at 1,550 nm.
Zero Dispersion Wavelength:	1,312±10 nm.
Zero Dispersion Slope:	≤0.092 ps/(nm*km).
Total Dispersion:	≤3.5 ps/(nm*km) at 1,285-1,330 nm.
	≤18 ps/(nm*km) at 1,550 nm.
	≤22 ps/(nm*km) at 1,625 nm.
Polarization Mode Dispersion:	≤0.2 ps/(nm*km).

Mechanical Requirements:

Fiber Cables:

Optical Fiber Strands:

All optical fiber optical strands shall be: Corning SMF-28, Draka BendBright™ or Prysmian OneSpec™ G.657, single mode type or Engineer and NYC DOT Signals approved equivalent manufacture.

All glass fiber strands, within a given cable, shall be from the same manufacturer and fiber strands shall contain no factory splices.

Each fiber shall conform to the following minimum requirements:

Typical Core Diameter:	8.3 nm
Cladding Diameter:	125.0±1.0 nm
Core-to-Cladding Concentricity:	±0.8 nm
Cladding Non-Circularity:	±1.0%

Fiber Cables - Delivery Requirements:

Fiber cables shall be delivered, curbside, shipped on new, un-damaged, wood or reusable steel reels, without any splices.

Three (3) meters of each end of the fiber cable shall be accessible for testing upon receipt at the Contractor's facility and again immediately prior to installation/placement.
Both ends of the fiber cable shall be sealed to prevent moisture ingress.

A durable weather resistant tag or label on each reel shall contain the following information:

1. Manufacturer's name.
2. Cable type.
3. Length of cable contained on the reel in meters and feet.
4. Cable reel serial number

Attached to the reel, in a weather resistant envelope, shall be the detailed reel shipping record. The shipping record shall contain the following, in addition to the above information:

1. Date of manufacture.
2. Date cable tested.
3. Cable characteristics (size, attenuation for each fiber).
4. Cable reel serial identification number.

ITS Fiber Optic - Connectors:

Fiber Optic Connectors shall be furnished and installed – including the cost of connectorizing, testing and commissioning fiber optic cables. The fiber connectors shall be factory installed. Field installation of fiber connectors shall only be permitted with the express consent of the Engineer and field connectorization methods and exception will be considered on a case by case basis.

Fiber Optic connectors shall meet the following requirements:

1. Corning UniCam® Type ST, twist lock (bayonet). Blue Color-coded boot
2. Ceramic ferrules
3. Single Mode (OS/2)
4. Fiber secured within the ferrule with epoxy, as specified by the connector or epoxy manufacturer.
5. Operating Temperature: -20º C to +70º C
6. Low Insertion loss: 0.5 dB maximum / connector
7. Return loss: 55 dB minimum
8. Field installable, Pretium® Performance
9. Factory Polished

10. 9/125 µm Fiber

Construction:

ITS Fiber Cable - General:

All fibers in the fiber optic cables shall be spliced, terminated, or both, within the field cabinets, splice cases, signal patch and splice points and pull boxes, as designated in these contract documents and/or as directed by the Engineer.

The Contractor shall furnish all equipment, specialty test instruments and qualified fiber optic splicing technicians, as required for the installation, termination, testing and commissioning of the fiber optic cables.

The Contractor shall provide all passive components required to form a complete cable plant including, but not limited to, connectors, fiber breakout kits, supports, pole hardware, attachments and ancillary components required for the installation of the ITS fiber cable plant. Include all incidental items such as: terminators, annenuators, conduit-duct moisture and water seals, fiber approved lubricant, identification tags, cable end caps, cable management devices including similar components necessary for the support attachment and racking of slack fiber cables.

The components supplied shall be commercially available, state-of-the-art components, suitable for this application.

The drop optical fiber cable designations used in the plans indicate the function and strand counts of the fibers contained in the cable and not necessarily the type of cable.

Drop fiber cable connects field end point devices for aggregation up to the distribution/backbone optical fiber cable. Aerial drop cables are used to provide temporary ITS fiber service to end point locations, while the Project work areas are being removed, excavated and awaiting the installation of ITS underground conduits and pathways to connect fiber to the permanent structures.

Preinstallation Requirements:

The Contractor shall be entirely responsible for the fiber optic cable security, quality and adherence to these specifications, from its manufacture to the time the network is accepted by the Engineer.

Cable Plant - Design Submission:

The Contractor shall submit a detailed Fiber Cable Plant - Design Submission, in working shop drawing format, to the Engineer for approval. The Engineer shall have thirty (30) working days to review this submission. The Fiber Cable Plant design submission shall include the following:

3) Catalog cuts (TDS) and associated shop drawings for all cable, connectors, splice equipment, splice enclosures, splice trays, Patch panels, cable installation, active and test equipment, in adequate detail to verify compliance with the specifications.

4) Manufacturer’s recommended cable installation techniques such that the optical and mechanical characteristics of the cables are not degraded at the time of installation. The proposed installation methods shall be on site (field) reviewed by a qualified fiber technician of the cable manufacturer.

5) The installation review recommendations shall include the following:

    a) Cable manufacturer’s approved cable pulling lubricants for use on the cable and the intended method of lubricant application. Lubricants which are not factory approved will not be permitted.

b) Cable Placement, Installation set-up and pull plans, including sizes, types and location of fiber rollers, feeder guides, tension gauge (make and model number), attachment of pulling jig to fiber jacket, direction and length of each pull.

c) Maximum cable pulling tensions, which shall specify both pulling effort expected from the cable strand conductors and for pulling solely from the outer jacket. Pulling tension worksheets shall be tabulated, reviewed and submitted by a qualified manufacture's service technician or by a Professional Engineer who is experienced in outdoor fiber optic placement (OSP) and who is licensed to practice in NY State.

d) Minimum bending radii, shall be specified in minimum inches bend radius for both the installation and for long term installation.

e) Method and equipment to pull multiple cables.

f) Method / materials to seal unterminated cables against water ingress.

g) Proposed splice locations and amount of slack proposed for each splicing location. This shall be shown by line diagrams using AutoCAD program file submissions.

h) The CAD layout and splice detail drawings shall be laid out on ANSI D size sheets and printed on 11"x17" B size sheets.

i) Splice material manufacturer's recommended procedures for installation of the splices and to test field configured enclosures.

j) Submit expected attenuation between end points of all fiber segments.

k) Including in the attenuation calculation submission shall be all expected losses resulting from cable, splices and connectors.

l) No fiber optic cable shall be installed until each of the items listed above have been submitted, reviewed and approved by the Engineer.

m) The locations of temporary ITS fiber drops, using Figure 8, self-supporting aerial cable shall be identified on the Contractors' work plan and once the permanent ITS fiber is installed, terminated, tested and commissioned, the aerial temporary fiber cables and supports shall be removed.

Cable Cross Section (Representation of standard construction):

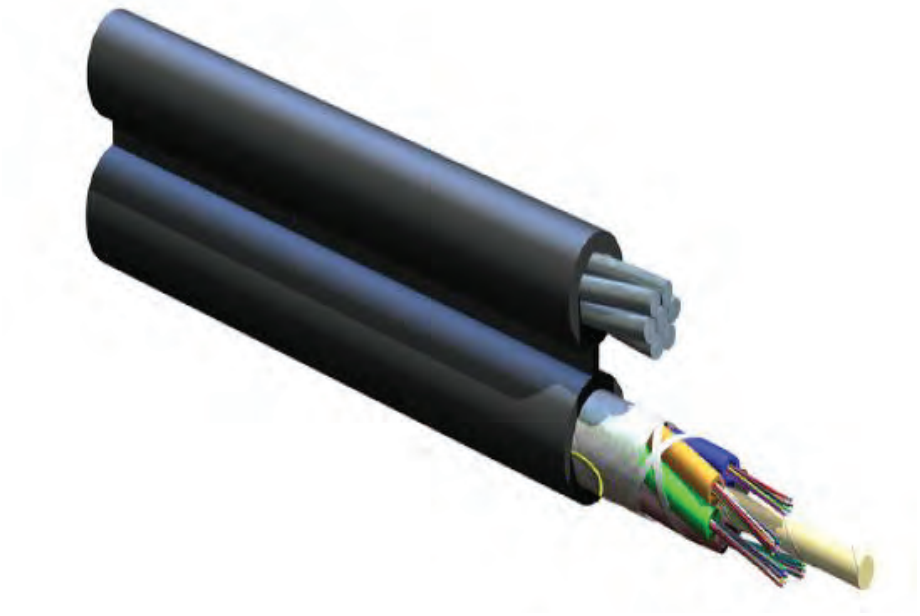

Overall Cable Construction:

Buffer tube: High Modulus Polymeric material.

Dimension: 0.41 in (10.5 mm), nominal.

Total Buffer Tubes: 6

Active Buffer Tubes: 4

Fibers Per Tube: 12

Buffer Tube color code: Blue, Orange, Green, Brown

Dielectric Central strength member (CSM) with water swellable yarns. Cable Core: The cable elements are stranded around the CSM, using reverse oscillation.

Moisture Resistance: A water blocking tape is applied over the cable core to prevent water ingress and migration with a nominal of 25% overlap.

Cable Strength: Circumferential strength members are placed over the cable core and under the outer sheath.

Outer Sheath: UV Resistant, Black, Outdoor Rated MDPE.

Nominal Fiber Cable Dimensions & Weights:

Maximum Span, 1% Install Sag	550 ft (168 m)
Aerial Span Sag category, NESC	Heavy
Minimum Band Radius	4.13 in (105 mm)
Weight	2.15 lbs./ft. (297 kg/km)

Fiber Characteristics:

Maximum Attenuation @ 1310/1550nm	.35/.25 B/km
Core Diameter, nominal	8.3 µm
Cladding Diameter	125.0 ± 1.0 µm
Primary Coating Diameter	245 ± 10 µm
Maximum Dispersion Slope	0.092 ps/nm^2-km
Fiber Cutoff Wavelength	1,150-1,350nm
Cabled Cutoff Wavelength	<1260nm
Mode Field Diameter @ 1,310nm	9.2 ± 0.4µm
Mode Field Diameter @ 1,550nm	10.5 ± 1.0µm
Cladding Non-circularity	<1%
Core/Clad Offset	□.80 µm
Zero Dispersion Wavelength	1,300-1,322nm
Numerical Aperture	0.13
Group Refractive Index @ 1,310/1,550nm	1.467/1.4675
Proof Test	100 kPSI

TIA/EIA-598 Optical Fiber Cable Color Coding:

The fiber optic cable color code is based on the 10 TIA colors that are used for plastic insulated conductor copper. Two more colors (Rose and Aqua) have been added to bring the optical fiber color code to 12.

The following fiber color code is for 12 fiber strands.

Fiber	Color Code	Color
1	blue	
2	orange	
3	green	
4	brown	
5	slate	
6	white	
7	red	
8	black	
9	yellow	
10	violet	
11	rose	
12	aqua	

For cables that consist of more than 12 strands, the color code repeats itself.

Each group of 12 strands is identified with some other means such as:

Multiple buffer tubes, each with 12 or less strands, either numbered or colored following the same color code, e.g., 1st tube is blue, 2nd is orange, etc.

24 strand groups with the color code repeating with some variation, e.g., the 1st group of 12 strands are solid colors and the 2nd group are solid colors with a stripe or some other identifying mark.

Preparation for Cable Delivery:

The fiber optic cables shall be packaged to preclude the inducement of damage due to handling and transportation, and cable reel put ups shall be in accordance with the best commercial practices available.

Manufacturer's (source) Quality Assurance:

Each cable reel shall be tested immediately prior to shipment. The manufacturer's test shall be using a calibrated Optical Time Domain Reflectometer (OTDR).

The cable manufacturer shall certify that each reel of fiber cable that is furnished meets or exceeds the following test requirements as defined in EIA/TIA-455B "Standard Test Procedures for Fiber Optic Fibers, Cables, Transducers, Sensors, Connecting and Terminating Devices and Other Fiber Optic Components" Fiber Optic Test Procedures (FOTP):

Fluid Penetration: When tested in accordance with FOTP-82, a one (1) meter length of unaged cable shall withstand a one-meter static head or equivalent continuous pressure of water for one hour without leakage through the open cable end.

Filling Compound Flow: When tested in accordance with FOTP-81, the fiber cable shall exhibit no flow (drip or leak) of filling or flooding compound at 70° C.

Compressive Load: The cable shall withstand a minimum compressive load of 22 N/mm applied uniformly over the length of the sample. The cable shall be tested in accordance with FOTP-41, with the load applied at the rate of 2.5 mm/minute. The load shall be maintained for one minute and then decreased to 11 N/mm. The 11 N/mm load shall be maintained for 10 minutes. The magnitude of the attenuation change at 1,550 nm shall not exceed 0.4 dB prior to release of the 11 N/mm load. The repeatability of the measurement system is typically 0.05 dB or less. No fibers shall exhibit a measurable change in attenuation after load removal.

Tensile Loading and Bending: When tested in accordance with FOTP-33, using a maximum mandrel and sheath diameter of 560 mm the cable shall withstand a tensile load of 2,700 N. The change in attenuation shall not exceed 0.2 dB during loading and 0.1 dB after loading at 1,550 nm.

Low or High Temperature Bending: When tested in accordance with FOTP-37, the cable shall withstand four full turns around a mandrel of $\leq$ 10 times the cable diameter after conditioning for four hours at test temperatures of -30º C to 60º C. Neither the inner or outer surfaces of the jacket shall exhibit visible cracks, splits, tears or other openings.

Optical continuity shall be maintained throughout the test.

Impact Resistance: When tested in accordance with FOTP-25, the cable shall withstand 25 impact cycles. The change in attenuation shall not exceed 0.2 dB at 1,550 nm. The cable jacket shall exhibit no cracking or splitting upon completion of the test.

Cable Flexibility: When tested in accordance with FOTP-104, the cable shall withstand 25 mechanical flexing cycles at a rate of 30" per cycles per minute with a sheath diameter not greater than 20 times the cable diameter. The fibers shall not experience an attenuation change greater than 0.1 dB at 1,550 nm. The cable jacket shall exhibit no cracking or splitting when observed under five times magnification.

Temperature cycling: When tested in accordance with FOTP-3, the change in attenuation at extreme operational temperatures (-40º C to 70º C) shall not exceed 0.2 dB/km at 1,550 nm.

Cable Twist: When tested in accordance with FOTP-85, a length of cable no longer than 4 meters shall withstand 10 cycles of mechanical twisting. The change in attenuation shall not exceed 0.1 dB at 1,550 nm.

The Manufacturer shall submit a plan for source QA/QC with the associated Technical Data Sheet (TDS) submission, for each cable type.

Reel by reel manufacturer's certificates of QA/QC shall include the actual end to end OTDR test results. Fiber test certificates shall be signed, dated and transmitted to the NYC DOT ITS project manager for use in site acceptances, as well as for the permanent optical cable performance record. Test certification documents shall be submitted prior to site inspection acceptance and cable placement activities. Manufacturer documents shall be provided within ten (10) days of the date of each manufacturer's shipment.

Manufacturer's Shipping Certification:

The following tests shall be performed, and the results documented for fiber cables meeting the requirements herein.

Prior to shipment from the factory: each fiber cable shall be OTDR attenuation tested, at both 1,310 nm and 1,550 nm, with a calibrated test unit.

Fiber Technicians - Experience Requirements:

All Personnel involved in the installation, splicing, termination, and testing of the fiber optic cables shall submit proof of meeting the following experience requirements:

1) A minimum of five (5) years of experience in the installation of fiber optic cables, including fusion splicing, terminating and testing of single mode outside plant fibers.
2) Experience in installing at least five (5) systems where fiber optic cables are outdoors in conduit or underground in metropolitan duct banks. The systems submitted for reference shall have been in continuous satisfactory operation for at least two (2) years.
3) The Contractor shall submit individual resumes of all field personnel listing their names, fiber projects worked on and the names and telephone information for references who can be contacted regarding the individuals experience in installing large city-wide fiber optic systems.

All Personnel shall also meet the following requirements:

1) Fiber Splicers and terminating technicians shall have been trained and certified in fiber optic splicing procedures by the manufacturer of the specific fiber splice and connector materials to be used on this project.
2) Fiber cable installers shall have been formally trained and certified in the correct fiber optic cable installation, pulling, placement and handling procedures by the manufacturer of the fiber optic cable to be used.

3) Personnel involved in fiber optic testing shall have been trained and certified by the manufacturer of the fiber optic cable test equipment (OTDR) to be used, and in fiber optic cable testing and reporting procedures.

4) Proof of the appropriate trainings shall be submitted, in writing to the Engineer for approval, a minimum of thirty (30) working days prior to start of cable installation.

Fiber Installation Requirements:

The cables shall be installed as shown in the plans and in accordance with the Contractor's approved cable plant installation plan.

The Contractor shall furnish and install all incidental hangers, connections, equipment, and accessories as required to provide a complete and functional metropolitan ITS fiber-based communications plant. Include all related components as specified under this contract and coordination with any incidental equipment, as supplied by others.

All work shall be done in compliance with the latest published edition of NFPA 70 National Electrical Code (NEC) including the NYC Electric Code amendments to the NEC.

Fiber optic cable shall be installed in strict accordance with the approved manufacturer's recommendations and under the direct supervision of a qualified cable technician(s). In addition, the following installation requirements shall also be met:

1) The identification, sizes, number of pullboxes and their final locations shall be as shown on the plans.

2) The field cable installation shall be in strict accordance with the approved Cable Placement Installation set-up and pull plans.

3) Additional fiber slack, as indicated on the approved Cable Placement installation plan, may be required for closure preparation and splicing.

4) Drip loops shall be provided for aerial fiber installations and shall be formed in accordance with the fiber manufacturer's written recommendation.

5) No fiber optic cable shall be pulled through the equivalent of more than one 90 degree bend unless so indicated on the approved Cable Placement plans or is specifically approved by the Engineer.

6) Fiber cables shall not be pulled over pullbox or manhole edges or corners, over or around obstructions, or through unnecessary curves or bends.

7) Fiber cables shall be looped in and out of cabinets, manholes and pull boxes to provide adequate slack, gradual bends and shall exert the least amount of stress on the fibers.

8) The Contractor shall ensure that the fiber cable is not damaged during storage, pulling or installation.

9) Fiber optic cable ends shall be kept sealed at all times during installation, using a method recommended by the cable manufacturer and approved by the Engineer. Close fitted removable caps that match the cable OD are preferred.

10) Fiber cable ends shall remain sealed until the Contractor terminates the fiber cables. Cables that are not immediately terminated shall have a minimum of two meters (7 feet) minimum of slack.

11) When using fiber pulling lubricants, the Contractor shall adhere to the cable manufacturer's requirements for the proper type, amount, application tools and methods.

The contractor shall be responsible for the cleaning and removal of all lubricant from the exposed fiber jacket and enclosures.

12) Optical fiber cables shall be installed in continuous lengths without any intermediate splices throughout the project except where splices are specified and indicated on the approved Cable Placement submission and/or as approved by the Engineer.

13) Fiber optic drop cables shall be spliced to either the backbone or distribution cable at the locations indicated on the approved Cable Placement Installation plans and/or as directed by the Engineer.

14) The maximum fiber pulling tensions and minimum bending radii shall not be violated at any time during installation. The Contractor shall consult with the Engineer concerning the routing via any existing conduit, pullboxes, duct banks or risers, which could force the violation of the minimum bending radius for each size/OD of fiber optic cable.

15) All optical fibers shall be spliced where indicated to provide continuous runs. Where a fiber distribution/backbone fiber is spliced to a drop fiber, the distribution/backbone fiber beyond the splice point shall be a continuous fiber length to the end of the optical cable run.

16) At the completion of aerial drop fiber termination the Contractor shall test each fiber of the installed optical cable for signal continuity, anomalies (events above 0.3 dB) and individual fiber attenuation using a calibrated Optical Time Domain Reflectometer (OTDR), testing at wavelengths of 1,310 nm and 1,550 nm.

Fiber Termination Requirements:

The aggregate connector loss for complete connections to the terminal equipment shall not exceed a mean of 0.5 dB. No individual connector losses above 1.0 dB will be permitted. Connectors shall be qualified and accepted on the basis of connector-to-connector mating, using similar fibers. Unused (dark) optical fiber cables shall be properly terminated, tested and protected with sealed end caps.

Fiber Testing Requirements:

(Fiber Optic Cable Installation-Site Acceptance Tests)

All optical fiber links, including all dark/spare fibers, shall undergo the below acceptance tests after installation of fiber connectors and splices.

A fiber link is defined as:

a continuous length of fiber including all splices and connectors

and for fibers broken by an intermediate splice to a drop cable;

the length of fiber from the break to each end.

The Contractor shall provide all connectors, calibrated fiber jumper cords, adapters and splices necessary to perform the required field validation of performance-based tests:

1) Using a calibrated OTDR test each link in both directions at 1,310 nm and 1,550 for fiber attenuation, continuity, length, and anomalies.

2) Each optical fiber shall meet the following acceptance criteria:

   a) Attenuation: Average for both directions shall not exceed 0.4 dB/km + 0.1 dB/splice + 0.5 dB/connector. The number of splices and cable attenuation shall be based upon the approved Fiber Cable Installation plan.

b) Anomalies: No event shall exceed 0.3 dB. If any event is detected above that value, the Contractor shall repair or replace that entire section of fiber cable. A section of fiber is defined as the length of fiber cable between two adjacent splices, termination (patch) panels or a splice and a termination (patch) panel.

3) Using an optical source and a calibrated optical power meter measure the attenuation from both ends. The measured attenuation shall be meet the criteria defined for the attenuation using the OTDR.

4) Any fiber cable that fails to meet any of the testing requirements shall be replaced.

5) The Contractor shall submit to the Engineer a tabulated list of all fibers and the actual end-to-end measured values from the above tests. OTDR results shall obtained by a qualified technician with calibrated instruments and shall utilize the same instrument, calibration from test to test. The report of field acceptance testing shall be organized, by each link and each link shall be permanently identified by specified cable ID markers at each point. Link groupings, for each cable, shall include the To/From cable foot marks for validation of link lengths (LOA).

6) The field test reports shall include graphic depictions of all traces and loss length printouts.

7) Each fiber cable shall be listed according to the: cable ID, final strand ID, color code and link ID.

8) The Contractor's submission of accurate and validated field performance test data and its approval, by the Engineer, shall be the basis of acceptance for the fiber.

Record Documentation Requirements:

1) Five (5) complete sets of Installation, and As Built records are to be provided.

2) The aerial drop fiber cable records shall, as a minimum, include the following information:

a) Fiber Optic Cable Testing, for each link, including the OTDR trace graphic plots and attenuation measured, with the optical source and power meter. Dark fibers shall include in place connectors (end to end). Active fibers shall include End to End OTDR data with (1) patch loss at either end - identify the tested patch values used.OTDR Test report identification shall closely match the As Built Cable, breakout group and fiber strand identifications.

b) Factory QA/QC submissions including manufacturer's QC reports and on-reel OTDR Test reports, tested before shipping.

c) Cable Identification and splice / patch elevation details. Include FOC circuit callouts, as patched for each endpoint, splice, tap and patch location.

d) The contractor shall provide "as installed" information to the Engineer and the NYC DOT Signals office for each instance of self-supporting aerial drop fiber cables which are intended to provide temporary ITS end point network connections. Maintain accurate cable plant records during the duration of each set of temporary fiber used for bypass, demolition, excavation, underground construction and new facility installation staging, until the date of permanent fiber acceptance for each segment/reach.

Mechanical Requirements:

Maximum Tensile Load for: Installation	2,700 N (607 lbs.)
Maximum Tensile Load for: Long Term	890 N (200 lbs.)

Minimum Bend Radius: Loaded	20 X OD
Minimum Bend Radius: Un-Loaded	10 X OD
Crush Resistance:	220 N/cm (1.663 ft/lbs.)
Flexing, ±90°:	25 Cycles (min.)
Twist Test:	25 Cycles (min.)
Temperature Rating: Operation	-40° C to 70° C
Temperature Rating: Installation	0° C to 30° C
Temperature Rating: Storage	-40° C to 70° C

Material:

Hardware-Fasteners:

All external screws, nuts, bolts and locking washers shall be stainless steel; no self-tapping or Tek screws may be used, unless specifically approved by the Engineer. All screws, nuts, bolts and locking washers used shall be of corrosion resistant material, or Stainless Steel to resist corrosion.

Pole line hardware for aerial applications, shall be hot dipped galvanized type.

All material furnished shall be new, first commercial quality, and used in accordance with the highest industry practices.

METHOD OF MEASUREMENT:

ITS SINGLE MODE, FIBER OPTIC CABLE, 48 STRAND, SELF-SUPPORTING, AERIAL DROP TYPE will be measured based on the number of linear feet furnished, in place measurement, of installed and acceptance tested cable, in accordance with the Contract Documents and/or as directed by the Engineer.

BASIS OF PAYMENT:

The price bid per linear foot of ITS SINGLE MODE, FIBER OPTIC CABLE, 48 STRAND, SELF-SUPPORTING, AERIAL DROP TYPE shall include the cost of furnishing and installation along with all labor, materials, mounting, hardware, connectors, splices, related equipment and performance tests necessary to complete the work.

Item No.	Item Description	Pay Unit
PK-ESCR 785	ITS SINGLE MODE, FIBER OPTIC CABLE, 48 STRAND, SELF-SUPPORTING, AERIAL DROP TYPE	LINEAR FOOT

END OF SECTION

SECTION PK-ESCR 786 –ITS FIBER OPTIC INNERDUCT, 1 CHANNEL, 1.0 INCH

GENERAL:

Under this item, the contractor shall furnish and install new, fiber optic innerduct used for the NYC DOT ITS communications used for optical cables placed in new and existing Rigid Metallic Conduit (RMC), and for pathway protection where ITS fibers are run thru underground conduits and utility duct banks. Work scope shall include providing on-site fiber pathway confirmations by use of the rod and rope method, installation of single, dual or triple runs of new innerduct, preparation, identification and installation of fiber reinforced, foot marked “mule” tape, within each innerduct pre-installed for related fiber cable pulling work under another section.

Innerducts shall be continuous and as shown on the contract plans, ready for of the placement of new ITS fiber.

Include all innerduct couplings, connectors, end caps, identification tags and support hardware as necessary, for a complete fiber cable plant, as shown in the plans and/or as directed by the Engineer.

The quantity and types of fiber innerduct contained in each conduit/duct pathway shall be in accordance with the plans.

Materials:

All materials, fasteners and hardware furnished, assembled, fabricated or installed under this Specification shall be new, corrosion resistant and in strict accordance with the details shown on the plans and in the specifications.

Fiber optic innerduct shall be an individual HDPE conduit liner, as specified on the plans and in the Specifications.

Color:

The innerduct shall follow the NYC DOT ITS color code for trunk and backbone innerducts and as indicated on the plans.

The Contractor shall install the innerduct between equipment cabinets, manholes, pullboxes and utility (ECS) vaults, as shown on the plans. Innerduct shall have an inner diameter of 1.0-inch nominal. The outer diameter shall be sized to allow for the installation of four (4) innerduct channels within a 4.0” RMC conduit ID.

Product Standards:

The innerduct shall be fabricated out of high molecular weight, high density polyethylene (HDPE) which shall conform to the following material requirements:

Specification for Solid Wall High Density Polyethylene (HDPE) Conduit (ASTM F-2160)

Dimensions of PE/HDPE pipes, based on controlled outside diameter (ASTM D-3035)

Cell Classification: 335440A (ASTM D-3035).

Density: 0.946 g/cc (ASTM D-4883).

Melt Index: 0.25 g/cc (ASTM D-1238).

Tensile strength at yield: 22.6 MPa (ASTM D-638).

Elongation at break: 800 % minimum (ASTM D-638).

Flexural Modulus: 827 MPa (ASTM D-790).

Hardness (Shore D): 68.

Deflection temperature at 294 N: 69º C.

Environmental stress crack resistance - Condition B: 1000 hrs minimum (ASTM D-1693).

Brittleness Temp: -118º C (225º F) maximum (ASTM D-746).

UL 1990 Standard For Nonmetallic Underground Conduit (HDPE) With Conductors

Materials:

Drag Lines:

The Contractor shall provide non-conductive drag lines through the entire length of each of the individual channel of innerduct installed. The drag line shall be Bull-Line™ type, with longitudinal aramid strands ("warp") tied together with 90° cross weave of polyester strands ("weft"). Drag lines shall have a minimum tensile strength of 1,250 lbs. Drag lines shall be factory installed by the innerduct manufacturer and shall be 3/8" width (10 mm), type: WK-12, as manufactured by: Arnco Corp. or Engineer approved equivalent quality. Drag lines shall be sequentially foot marked.

Fiber Optic Innerduct, 1 Channel; shall be further accepted upon the basis of the manufacturer's written certification that it meets, or exceeds, each of the requirements of this specification.

Innerduct Manufacturer:

Fiber Optic Innerduct, 1 Channel; shall be new, unused and of current design and manufacture.

Fiber Optic Innerduct, 1 Channel; Manufacturer shall be an approved NYC DOT – Signals manufacturer:

Dura-Line division of Orbia Industries, 1400 Parkside Dr # 300, Knoxville TN 37922, www.DuraLine.com

Fiber Optic Innerduct Type: Smoothwall HDPE, UL Listed, Wall: SDR 13.5, 1.0 Inch ID

Construction Details:

Fiber optic innerduct shall be installed in conduits and duct banks where specified in the contract plans and / or as ordered by the Engineer.

Prior to the installation of the innerducts, the Contractor shall rope, rod and brush clean all existing conduit, duct banks and pullboxes as required. If existing manholes or pullboxes require resetting or other field modifications, the resetting / modification work shall be completed prior to the installation of new innerducts within the subject pullboxes or manholes and/or as directed by the Engineer.

Innerducts of the same color code identification, entering a pullbox or manhole from different sides, shall be aligned so that cables in a specific channel can be readily and directly pulled through the pull box or manhole, without crossing fiber cables installed in other pathways.

Innerducts shall run continuously through pullboxes or manholes, except at locations where slack fiber optic cable in excess of 10 liner feet will be stored. At slack storage pullboxes or manholes, the innerduct ends shall be extended at least six (6) inches past each (inner) box wall into the pullbox or manhole. Innerducts shall be installed in a neat and workmanlike manner and shall be secured or anchored using an approved work method to prevent innerduct movement during cable pulling operations.

All proposed fiber optic cable lubricants shall be compatible, and manufacturer approved for use with the innerduct material. Only approved lubricant products shall be ordered, used and comply

with the requirements of the fiber optic cable manufacturer. The Contractor shall submit written certification of the cable lubricant's compatibility to the Engineer for approval, prior to installation.

The Contractor shall apply only manufacturer approved pulling lubricants, in measured increments as necessary to ensure smooth, even cable pulls.

The Contractor shall pull in place the specified innerducts in accordance with manufacturer recommended installation procedures. The Contractor shall submit a written Method of Procedure (MOP) which details the intended Fiber Innerduct and Cable installation procedures. The plan of installation and procedure shall be delivered to the Engineer for approval a minimum of thirty (30) working days prior to the start of installation.

During installation of the fiber Innerduct, guide wheels, bending shoes or quadrant cable guides shall be used to achieve a smooth transition from road grade cable reels to the actual underground conduit depth centerlines.

Innerduct shall have a 24" bend radius, minimum.

Fiber Cable Pulls into Innerduct Pathways:

The Contractor shall insert removable filler inserts at the ends of the innerducts in order to avoid collapsing of the innerduct especially when using compression / pulling grips.

The maximum pulling in force shall not exceed 4.4 kN (1,000 lbs.) in any segment / pull reach.

The fiber cable manufacturer shall review and approve the Contractor's intended fiber innerduct and fiber cable installation plan, including pull and tension calculation details. The fiber manufacturer's installation instructions shall be submitted for approval along with the Contractor's fiber work method submission.

Pathway Penetration Sealing:

At all locations where innerducts terminate or transit, the Contractor shall install sealing and termination plugs for all innerduct pathways. Use only approved, removable, mechanical conduit or duct to innerduct OD seals in order to prevent water, gases and foreign matter ingress.

Removable innerduct plugs (end caps) shall be installed immediately after the innerduct is emplaced within each pullbox/manhole. Each innerduct shall be tested for clear bore and proper installation, using a closely sized, leather disc or aluminum "proof" mandrel". Each Innerduct's integrity shall be verified in place, by the Contractor, in the presence of the Engineer.

Components and Incidentals:

The Contractor shall provide all components required to form a complete innerduct and fiber cable plant including, but not limited to; bushings, couplings, connectors, duct transitions, fiber enclosure kits, supports and ancillary components required for the installation of the ITS fiber cable plant.

Include all incidental items such as: removable gas, moisture and water conduit/duct seals, fiber approved lubricant, identification tags, end caps and innerduct management devices including such devices necessary for the support racking and connections of slack fiber cable / innerducts within pullboxes and manholes.

The components supplied shall be commercially available, state-of-the-art components, suitable for this application.

Pre-installation Requirements:

The Contractor shall be entirely responsible for the fiber optic cable and innerduct security, quality and adherence to these specifications, from its manufacture to the time the network is accepted by the Engineer.**Optical Fiber Innerduct Color Code**

The EIA telecommunications cable color code is specified for innerduct color identification, colors are based on the pathway colors that are used for similar NYS/NYC DOT ITS systems.

Color Code	Service	Color
Blue	NYC DOT - Fiber	
Orange	Reserved for Verizon / CATV Fiber	
Green	** USE FOR ITS BACKBONE FIBER INNERDUCT NYC DOT – ITS Fiber	
White	NYC DOT - Future	
Red	Reserved for FDNY	
Black	Fiber Drop use only	
Yellow	Restricted color. Do not use (Gas Utility)	

All material furnished shall be new, first commercial quality, and used in accordance with the highest industry practices.

METHOD OF MEASUREMENT:

ITS FIBER OPTIC INNERDUCT, 1 CHANNEL, 1.0 INCH will be measured based on the number of linear feet furnished, in place measurement, of installed and tested innerduct, in accordance with the Contract Documents and/or as directed by the Engineer.

BASIS OF PAYMENT:

The price bid per linear foot of ITS FIBER OPTIC INNERDUCT, 1 CHANNEL, 1.0 INCH shall include the cost of furnishing and installation along with all labor, materials, incidentals, mounting, hardware, connectors, couplings, drag lines, identification, related equipment, integrity tests and record documentation necessary to complete the work.

Item No.	Item Description	Pay Unit
PK-ESCR 786	ITS FIBER OPTIC INNERDUCT, 1 CHANNEL, 1.0 INCH	LINEAR FOOT

END OF SECTION

SECTION PK-ESCR 787 – ADJUST TOP OF UTILITY STRUCTURE TO GRADE

GENERAL: Under this item the Contractor shall remove existing frames and covers of utility structures (I.E. existing catch basins, manholes, drain inlets and electric covers) and reset them to grades shown on the plan or directed by the Engineer. Work under this item includes excavation.

MATERIAL: All changes shall be made with acceptable brick laid in Portland cement mortar of one (1) part cement and two (2) parts of fine aggregate as directed by the Engineer.

METHOD: All work shall be done in a workmanlike manner by competent masons, but if the frames or covers are broken through carelessness of the Contractor, the contractor shall replace them with new ones equal to those broken, at the contractors own expense.

MEASUREMENT & PAYMENT: The quantity of ADJUST TOP OF UTILITY STRUCTURE TO GRADE, to be paid for, shall be the number of structures adjusted in accordance with the plans, specifications, and directions of the Engineer.

The price bid shall be a unit price for EACH structure adjusted and shall include the cost of all labor, materials, equipment and incidental expenses in including excavation and backfill, necessary to complete the work in accordance with the plans and specifications to the satisfaction of the Engineer.

Item No.	Item	Pay Unit
PK-ESCR 787	Adjust top of Utility Structure to Grade	EACH

END OF SECTION

SECTION PK-ESCR 788 – ALLOWANCE FOR UTILITY COMPANY FEES

GENERAL: Under this item the Contractor shall pay Utility Company fees (such as ConEd "Accommodation Cost" or "Excess Distribution Facility (EDF) Cost" fees) that are related to the ITS work (PK-ESCR 450 through PK-ESCR 469 and PK-ESCR 781 through PK-ESCR 786) but not included in other specification items and/or not indicated on contract plans but deemed necessary to complete the work.

The Contractor shall submit to the Engineer legible, stamped paid receipts from the utility company(s) along with the description and the location of work clearly displayed.

MEASUREMENT & PAYMENT: For authorized work performed under this Contract, payment will be based upon submission of legible paid receipts with description and location of work approved in advance by the Engineer.

The Contractor will be reimbursed the invoice amount with no markup.

Item No.	Item	Pay Unit
PK-ESCR 788	Allowance for Utility Company Fees	Fixed Sum (FS)

END OF SECTION

SECTION PK-ESCR 802 – STEEL FENCE WITH CLIMBING PROTECTION

WORK: Under these Items, the Contractor shall furnish and erect **STEEL FENCE WITH CLIMBING PROTECTION** and **GATES WITH CLIMBING PROTECTION** of the types and sizes shown on the plans, in accordance with the plans, specifications, and directions of the Engineer.

MATERIALS: Unless otherwise specified, the materials shall meet the requirements of the NYCDOT Standard Highway Specifications.

FENCES AND GATES shall be constructed of solid bars, posts, and rails of the sizes shown on the plans unless specifically noted as lightweight. All material shall conform to Specification ASTM A36.

FABRICATION- LIGHTWEIGHT GATE (where specified only): Shall be as manufactured by Shannon Gates and Railings, Deer Park, NY, or approved equal and shall be fabricated from 16G square tubing and 1/2" channels.

FABRICATION-STEEL FENCES AND GATES: Fences and Gates shall be fabricated in strict accordance with the plans and approved Shop Drawings. Posts and rails shall be formed into panels of the shapes on the plans and joints completely welded with welds of proper size and shape; all welds ground smooth to a neat finish. Connection shall be provided as indicated on the plans. Welding shall conform to the requirements given in the NYCDOT Standard Highway Specifications.

Posts and pickets shall, in all cases, be truly vertical. Rails and bars shall be parallel to grade as shown on the plans. Panels shall be curved as required by the work. Braces shall be required at two-thirds (2/3) of the way up each post when fence is ten feet (10') high or over.

HINGES: shall be Stanley #BB855, Heavy Duty Steel Ball Bearing Hinge, 5" x 6", as manufactured by Stanley Hardware, New Britain, CT, Shannon Gates and Railings, Deer Park NY or approved equal.

LOCK BOLT- Double Gates: Shall be a drop rod bar arranged to engage the gate stop. Locking device shall be constructed so that the drop rod cannot be raised when the gate is locked. The locking bolt and bolt catch hardware shall be constructed as shown on the standard detail drawings. The locking device shall have provisions for a padlock. All necessary fittings and gate holders to lock gates in both open and closed positions shall be furnished. The locking device shall be as manufactured by Shannon Gates and Railings, Deer Park NY, or an approved equal locking device.

GATE LATCH – Single Gates: Shall be a lockable stirrup type. Latch shall be constructed of steel bars and blocks with a stainless steel pin, as shown on the drawings. The ends of stirrups shall be treated with a heavy-duty flexible, rubberized coating such as Plastidip as manufactured by P.D.I. Inc., Circle Pines, MN, or approved equal.

PADLOCK: The Contractor shall furnish one padlock for each single gate and each leaf of double gates. The padlocks shall be American No. 5571 as manufactured by American Lock Co., Crete, IL., or approved equal. All padlocks for the same park facility shall be keyed alike, with two inch (2") wide by three-quarter inch (3/4") thick brass body, maximum security, five (5) pin tumblers with hardened alloy steel chrome plated shackle no less than three-eighth inch (3/8") diameter and two inch (2") clearance (elongated shackle). A galvanized steel chain, nine inches (9") long

shall be fastened to the gate and body of the lock. The chain shall be five-sixteenths inch (5/16") by one and three-eighths inch (1 3/8"). The Contractor shall furnish two (2) keys for each padlock.

CAST IRON PARKS LEAF – Double Gates: The Park Leaf casting shall be as manufactured by Wemco Castings, Bohemia, N.Y, or approved equal. The NYCDPR retains exclusive right to the use of the pattern. Leaf castings are to be fabricated from Ductile Iron 65-45-12. The small 9 1/2" leaf shall weigh approximately six pounds (6 lbs.) each. The back of the leaf casting is to be flat and the front face shall be contoured with the veins of the leaf shown in relief. See Contract Drawings for structural details.

Park leaves shall be welded to each leaf of the steel gate in the shop. Field welding will not be permitted.

GROUT: Grout for fence posts shall be non-shrink, cement based grout such as Sonogrout 10K as manufactured by BASF Building Systems, Shakopee, MN or SikaGrout 212, as manufactured by Sika Corporation, Lyndhurst, NJ, or approved equal.

SEALANT: Sealant around fence post shall be one part polyurethane, elastomeric adhesive such as MasterSeal CR 195, as manufactured by BASF Building Systems, Shakopee, MN or Sikaflex1a, as manufactured by Sika Corporation, Lyndhurst, NJ, or approved equal.

PAINTING: The fences and gates shall receive three (3) coats of paint. The first coat shall be shop applied; the second and third coat shall be field applied. Immediately prior to painting, all surfaces of fences and gates shall be thoroughly free of debris. All surfaces that are rust free shall be treated in accordance with SP-1, Solvent Cleaning. Treatment shall be performed with a solvent such as mineral spirits, xylol, or turpentine to remove all dirt, grease, and foreign matter. Surfaces that show evidence of scale and rust shall be cleaned in accordance with SP-2, Hand Tool Cleaning, a method generally confined to wire-brushing, sandpaper, hand scrapers, or hand impact tools or SP-3, Power Tool Cleaning, a method generally confined to power wire brushes, impact tools, power sanders, and grinders in order to achieve a sound substrate. After the fence and gates have been cleaned and prepared, they shall be painted as follows:

First Coat (Shop Applied): D.T.M.(Direct to Metal) Alkyd semi-gloss P24, as manufactured by Benjamin Moore & Co., Montvale, NJ, or Kem Bond® HS Metal Primer, B50NZ3, red oxide, as manufactured by Sherwin Williams Company, Woodside, NY, or approved equal. Primer shall be a fast drying, 53 to 61% weight solids, low VOC, rust inhibiting, modified alkyd metal primer with a dry film thickness of 1.7 - 5 mils. Paint requires up to two (2) to two and a half (2 ½) hours drying time before recoating (with alkyds).

Second Coat and Third Coats (Field Applied): D.T.M.(Direct to Metal) Alkyd semi-gloss P24, Safety Black, as manufactured by Benjamin Moore & Co., Montvale, NJ, or Steel Master 9500 Silicone Alkyd, as manufactured by Sherwin Williams Company, Woodside, NY, or approved equal. Color to be Black unless otherwise shown on the contract drawings. Topcoat shall be a silicon alkyd, semi or high gloss coating having a dry film thickness of 1.7 - 3 mils. Paint requires up to thirty (30) hours drying time @ 50º F; up to sixteen (16) to eighteen (18) hours drying time @ 77º F. Paint adhesion shall be 100% retention in accordance with ASTM D3359, classification 5B.

All paints shall be applied when ambient air temperature is 50 °F minimum and rising. No painting will be allowed below the minimum ambient air temperature. Surfaces to be painted shall be moisture free. In addition, no painting will be allowed below the temperature at which moisture will condense on surfaces.. The ambient temperature must be at least 5 degrees F above the dew point.

INSTALLATION: The fences shall be erected in holes that have been formed in the concrete or stone to receive them. After the posts have been set in place and properly supported to hold them in line and grade, the annular space shall be filled with the specified non-shrink, cementitious grout. The grout shall be flush with the concrete curb. After the grout has cured, the Contractor is to install polyurethane sealant around the fence post. Sealant shall be gunned in between the base of the fence post and the concrete curb. Sealant shall be applied in strict accordance with the manufacturer's instructions, and shall be tooled in as required. **Note: All gypsum (Calcium Sulfate, CaSO4) based grout will be rejected.**

Any fences and gates not set plumb and true to line and grade shall be removed and replaced at the Contractor's expense. The Contractor shall maintain the fences and gates during the life of the contract and shall repair replace all members that are disturbed, damaged, or destroyed.

SUBMITTALS: All submittals shall be in accordance with the requirements of the S-Pages.

Shop Drawings: shall be submitted prior to manufacture. SAMPLES: The Contractor shall submit for the approval finished samples of parts of the fences. The workmanship and finish of the final product shall be equal to the approved samples. Only if proposed manufacturer is other than as specified, a full size sample must be submitted for approval for the following: Gate latch for single gate, padlock, cast iron parks leaf.

FOUNDRY CERTIFICATE: A certificate verifying the quality of ductile iron for the Parks Leaf shall be submitted. Certificate shall be on Manufacturers' letterhead, dated and signed by the company President with Contract Number, Contract Title, Contractor Name, and Class of Ductile Iron provided.

PAINT SUBSTITUTION: A written request for paint substitution must be submitted to the Engineer. The Contractor shall submit this request, along with manufacturer's data sheets for approval, a minimum of two (2) weeks prior to the intended date of paint application. All paint substitutions must be approved in writing prior to use.

MEASUREMENT AND PAYMENT: The quantity of **STEEL FENCE** to be paid for shall be the number of **LINEAR FEET** of each type fence furnished and erected complete, in accordance with the plans, specifications, and directions of the Engineer.

The quantity of **GATES** to be paid for shall be the number of **EACH** size (including both leaves of double gates and gate posts) furnished and erected complete in accordance with the plans, specifications, and directions of the Engineer, including Park leaf castings where double gates are specified, locking devices, gate stops, and padlocks.

The prices bid shall be unit prices per **LINEAR FOOT** of Steel Fence of each type and a unit price for EACH gate and shall include the cost of all labor, materials, and equipment required to furnish and erect fences and gates, including painting, grout, sealant, and all incidental expenses necessary to complete the work in accordance with the plans and specifications, to the satisfaction of the Engineer.

Concrete and excavation shall be paid for separately under their respective Items.

Item No.	Item	Pay Unit
PK-ESCR 802 A	STEEL FENCE WITH CLIMBING PROTECTION 6'-0" HT	L.F.
PK-ESCR 802 B	SINGLE GATE FOR STEEL FENCE WITH CLIMBING PROTECTION 6'-0" HT	EA
PK-ESCR 802 C	DOUBLE GATE FOR STEEL FENCE WITH CLIMBING PROTECTION 6'-0" HT	EA

END OF SECTION

SECTION PK-ESCR 805 – CUSTOM SITE FURNISHINGS

PK-ESCR 805.1 INTENT

This section describes the products and installation of Site Furnishings in accordance with the plans, specifications and directions of the Engineer.

PK-ESCR 805.2. DESCRIPTION

A. Under this Section, the Contractor shall furnish and install the followings Site Furnishings, in accordance with the Contract Drawings, specifications and directions of the Engineer:

1. RPL Bar Top Table – Low Height
2. RPL Bar Top Table – High Height
3. RPL Bar Bench
4. RPL Bar Bench Backed
5. Amphitheater Bench

PK-ESCR 805.3. MATERIALS

PK-ESCR 805.3.1. REFERENCES

A. ASTM Testing Standards:

1. ASTM B 117 – Standard Practice for Operating Salt Spray (Fog) Apparatus.
2. ASTM D 522 – Standard Test Methods for Mandrel Bend Test of Attached Organic Coatings.
3. ASTM D 523 – Standard Test Method for Specular Gloss.
4. ASTM D 2247 – Standard Practice for Testing Water Resistance of Coatings in 100% Relative Humidity.
5. ASTM D 2794 – Standard Test Method for Resistance of Organic Coatings to the Effects of Rapid Deformation (Impact).
6. ASTM D 3359 – Standard Test Methods for Measuring Adhesion by Tape Test.
7. ASTM D 3363 – Standard Test Method for Film Hardness by Pencil Test.
8. ASTM G 155 – Standard Practice for Operating Xenon Arc Light Apparatus for Exposure of Non-Metallic Materials.

B. ISO Testing Standards:

1. ISO 1520 – Paints and Varnishes – Cupping Test.
2. ISO 2815 – Paints and Varnishes – Buchholz Indentation Test.

C. ANSI/BIFMA Testing Standards:

1. ANSI/BIFMA X5.4-2005 – Standard Test for Lounge Seating.

PK-ESCR 805.3.2. SUBMITTALS

A. Product Data: Submit manufacturer's product data, storage and handling requirements and recommendations, installation methods and available colors, styles, patterns and textures.

B. Shop Drawings: Submit manufacturer's shop drawings, including plans and elevations, indicating overall dimensions for approval by the Engineer.

C. Samples: Submit manufacturer's samples of materials, finishes, and colors, including three (3) samples of specified color as applied to an 8 inch by 8 inch square of specified metal for approval by the Engineer.

PK-ESCR 805.3.3. DELIVERY, STORAGE, AND HANDLING

A. Delivery: Deliver materials to site in manufacturer's original, unopened containers and packaging, with labels clearly identifying product name and manufacturer.

B. Storage: Store materials in clean, dry area in accordance with manufacturer's instructions. Keep materials in manufacturer's original, unopened containers and packaging until installation.

C. Handling: Protect materials and finish during handling and installation to prevent damage.

PK-ESCR 805.34. WARRANTY

A. Warranty Information:

1. Products will be free from defects in material and/or workmanship for a period of three years from the date of substantial completion.
2. The warranty may exclude damage resulting from accident, misuse, tampering, negligence, or abuse.
3. Products shall be repaired or replaced to the satisfaction of the Engineer any items found defective upon inspection by an authorized manufacturer service representative and Engineer.

PK-ESCR 805.4. METHODS

The following methods of installation shall be used.

A. Examination:

1. Examine areas to receive the Site Furnishings.
2. Notify Engineer of conditions that would adversely affect installation or subsequent use.
3. Do not begin installation until unacceptable conditions are corrected and acceptance verified in writing by Engineer.

B. Installation:

1. Install Site Furnishings in accordance with manufacturer's instructions at locations indicated on the Drawings.
2. Locate Site Furnishings as directed by Engineer.

3. Install Site Furnishings plumb and level.

C. Adjusting:

1. Finish Damage: Repair minor damages to finish in accordance with manufacturer's instructions and as approved by Engineer.

2. Component Damage: Remove and replace damaged components that cannot be successfully repaired as determined by Engineer.

D. Cleaning: Clean Site Furnishings promptly after installation in accordance with manufacturer's instructions. Do not use harsh cleaning materials or methods that could damage finish.

E. Protection: Protect installed Site Furnishings to ensure they will be without damage or deterioration at time of Substantial Completion.

PK-ESCR 805.5. MEASUREMENT

The quantities of **RPL BAR TOP TABLE - LOW HEIGHT, RPL BAR TOP TABLE - HIGH HEIGHT, RPL TOP SEAT, and RPL TOP SEAT BACKED** to be measured for payment shall be the square foot of each type Site Furnishing installed at the site to the satisfaction of the Engineer.

The quantities of **AMPITHEATRE BENCH** to be measured for payment shall be the quantity of each type Site Furnishing installed at the site to the satisfaction of the Engineer.

PK-ESCR 805.6. PRICES TO COVER

The prices bid shall be the unit price per EACH type site furnishing Item covered under this Section and shall include the cost of furnishing all labor, materials, equipment, insurance, and incidentals necessary to furnish, assemble and install the Site Furnishings including, but not limited to, chair arm rests and glides, and hardware, all in accordance with the Contract Drawings, the specifications and the directions of the Engineer.

Payment will be made under:

Item No.	Item	Pay Unit
PK-ESCR 805 A	**RPL BAR TOP TABLE - LOW HEIGHT**	**SF**
PK-ESCR 805 B	**RPL BAR TOP TABLE - HIGH HEIGHT**	**SF**
PK-ESCR 824 A	**RPL TOP SEAT**	**SF**
PK-ESCR 824 B	**RPL TOP SEAT BACKED**	**SF**
PK-ESCR 906	**AMPHITHEATER BENCH**	**EA**

END OF SECTION

SECTION PK-ESCR 809 – SOD NEW LAWN, SPORTS FIELDS

WORK: Under this Item, the Contractor shall furnish and install **SOD NEW LAWN** areas including preparation of sod bed and shall maintain new lawn areas in accordance with the plans, specifications, and directions of the Engineer.

INTENT: This specification is intended for rototilling and sodding new lawn of any size on either new or existing topsoil.

MATERIALS:

Sod sports field mix: The Sod must be a superior sod grown from high quality seed of known origin. Seed is to be inspected by a Certification Agency to assure satisfactory genetic identity and purity, overall high quality, and freedom from noxious weeds at time of harvest.

A fescue mix on a sand based soil. The blend/mix of grass in sod shall meet the specifications set below and shall be harvested from one field to ensure a uniform color and texture.

25% JASPER CREEPING RED FESCUE
25% VICTORY CHEWINGS FESCUE
30% SPARTAN HARD FESCUE
10% AMERICA KENTUCKY BLUEGRASS
10% JEFFERSON KENTUCKY BLUEGRASS

NOTE: Sod shall be machine cut to a uniform soil thickness of one-quarter inch (1/4") at the time of cutting. Measurement for thickness shall exclude top growth and thatch.

Individual pieces of sod shall be cut forty-eight inches (48") wide by sixty-two and one-half feet (62.5') long (250 sq.ft.). Sod shall not be harvested or transplanted when moisture content may adversely affect its survival.
Sod shall be harvested, delivered, and transplanted within a period of thirty six (36) hours. Before cutting, Sod shall be mowed uniformly at a height of one and one-half inches (1 1/2"). The Engineer may inspect the Sod before it is harvested, but reserves the right to reject, on or after delivery, any Sod which, in their opinion, does not meet with the specifications.

When sod is delivered with monofilament (plastic or similar) backing, the backing shall be removed after rolling out the sod and discarded in an approved manner.

Ground Limestone: (Calcium Carbonate) shall have the following analysis: at least fifty percent (50%) shall pass a 200 mesh sieve; at least ninety percent (90%) shall pass a 100 mesh sieve; and one hundred percent (100%) shall pass a 10 mesh sieve. Total carbonates shall not be less than eighty (80) percent or 44.8% Calcium oxide equivalent. Pelleted limestone may be substituted at the discretion of the Engineer, when wind conditions exceed five (5) miles per hour.

The Contractor shall, at the direction and discretion of the Engineer, furnish a certified report of chemical analysis of representative samples of the Limestone which he proposes to use. All samples are to be taken by the Engineer and delivered to the laboratory: the price bid shall include inspection and laboratory charges. Limestone shall not be delivered until samples have been approved by the Engineer, but such approval does not constitute acceptance of the material. The Engineer reserves the right to reject on or after delivery any material which does not, in the Engineer's opinion, meet these specifications.

All limestone shall be delivered in standard size bags of the manufacturer showing weight, analysis, and name of the manufacturer. It shall be stored in such a manner that its effectiveness will not be impaired, as directed by the Engineer.

The rate of application of limestone per thousand (1,000) square feet shall be as follows, depending on the Hydrogen Ion concentration (pH) shown by a pH test (pH test to be provided by the Contractor at no additional cost to the City).

pH	**RATE (LBS.)**
Below 5.0	160
5.0 to 6.0	80
Over 6.0	0

Commercial Fertilizer Low Phosphorus (Slow Release): shall have the following composition by weight: Nitrogen (N) shall be min. 4% - max. 10%, of which min. of 50% is slow-release; available Phosphorus (P) shall be 0.67% or less (unless soil test indicates a need for additional phosphorus); and soluble Potash (K) shall be min. 4% - max. 12%.

Fertilizer shall be a pesticide free (no weed-and-feed) product such as Safer Ringer Lawn Restore II 10-0-6 as manufactured by Woodstream corp., Lifitz, PA; "Healthy Turf (8-1-9)" as manufactured by Plant Health Care, Inc., Pittsburgh, PA; Nutrients Plus (7-2-12) as manufactured by Nutrients Plus, Virginia Beach, VA; or approved equal.

All Commercial Fertilizer Low Phosphorus (Slow Release) shall be delivered in standard size bags of the manufacturer, showing weight, analysis, and name of manufacturer. It shall be stored as directed by the Engineer in such a manner that its effectiveness will not be impaired.

Application of any fertilizer on lawns or non-agricultural turf within 20 feet of a water body or on paved surfaces is restricted and may not be applied unless there is a buffer at least 10 feet wide of planted or naturally occurring vegetation, such as shrubs, trees and plants between the area receiving fertilizer and the water. Fertilizer shall not be applied between December 1 and April 1.

The rate of application: Two (2) applications of acceptable commercial fertilizer shall be applied by machine, each application at the rate of ten (10) pounds per 1,000 square feet or as recommended by the manufacturer. The first application shall be made at the time installation of Sod as specified.

The second application shall be made approximately six (6) months after the first application. This treatment shall take place during the next appropriate fertilizing season, the following Spring or Fall, and shall be subject to the direction of the Engineer.

The second application shall be applied to the surface only. Incorporation shall be achieved by thoroughly watering the entire area after application. The Contractor shall provide all labor and materials, including water, if not available from NYC sources.

PREPARATION OF SOD BED: Before any sod is placed, all areas to receive sod shall be thoroughly loosened with a rototiller to a depth of six inches (6"). All sticks, stones, roots, vegetation, or other objectionable material which might interfere with the formation of a finely pulverized sod bed shall be removed from the soil and a smooth uniform surface grade shall be established. Hollows, depressions, and gullies shall be filled by raking to level and topsoil added as necessary to provide a smooth surface prior to sodding. Topsoil shall be spread over the area to receive sod to the depth indicated on the drawings and as required to achieve the designated finished grade.

Compost (where required, paid separately): shall be thoroughly incorporated into the top five inches (5") of soil, where sod will be installed on existing topsoil and where soil testing indicates

low levels of organic matter. Where required, the compost shall be spread at the rate of one (1) cubic yard per one thousand (1,000) square feet unless otherwise directed by the Engineer. Where seed will be installed on new topsoil, compost shall not be added.

Amendments: After the compost has been incorporated into the existing soil, limestone (where required) and Commercial Fertilizer Low Phosphorous (Slow Release) shall be worked into the top three inches (3") of soil as directed by the Engineer.

All amendments must be submitted to the Engineer for approval, see SUBMITTALS: The Contractor shall notify the Engineer three (3) days prior to application of amendments.

INSTALLATION: All areas to receive sod shall then be compacted using a two hundred pound (200 lb.) roller. The area shall then be thoroughly watered prior to the placement of Sod. After drying out sufficiently, the area shall be considered ready to receive the sod.

Sod is not to be delivered or placed in a frozen condition. Sod shall be harvested, delivered, and installed within a period of thirty six (36) hours. No sod shall be harvested, delivered, or placed when, in the opinion of the Engineer, high temperatures may adversely affect the survival of the Sod.

The first row of sod shall be laid in a straight line with subsequent rows placed parallel to and tightly against each other. Lateral joints shall be staggered, each piece butted close together with no voids between the pieces. Care shall be exercised to ensure that the sod is not stretched or overlapped. Where mechanical equipment is used to lay sod, flotation tires are to be used. The sod shall be rolled immediately after placement and then thoroughly watered.

Sod shall be laid a minimum of four (4) weeks prior to the Substantial Completion date to allow the sod to thoroughly knit before being turned over to the Engineer. All dead sod shall be replaced prior to the Substantial Completion. All extra sod and/or plant debris remaining from the preparation procedure shall be removed from the site. The Contractor shall be liable for any damage to property caused by their sodding operations. All areas and construction disturbed shall be restored to their original condition, to the satisfaction of the Engineer.

WATERING AND MAINTENANCE: The Contractor shall maintain all sodded areas until Substantial Completion of the contract. The Contractor shall properly water as required to maintain optimum growing conditions for the new stand of grass until Substantial Completion. Where water is supplied from City hydrants, the Contractor shall obtain a hydrant permit from the Department of Environmental Protection. The Contractor is responsible for keeping the permits current. The permits are available from each borough office. To obtain a permit, the Contractor should bring a copy of their contract with a general description of the hydrant location(s) they propose to access. The addresses of borough offices are:

Manhattan: 1250 Broadway (8th floor)

Brooklyn: 250 Livingston St. (8th floor)

Bronx: 1932 Arthur Avenue (6th floor)

Queens: 96-05 Horace Harding Ex., Corona

Staten Island: 60 Bay St (6th floor)

If water is not available from NYC sources, the Contractor is responsible for supplying water from their own source.

In absence of adequate rainfall, watering shall be performed daily or as often as necessary and in sufficient quantities to maintain moist soil to a depth of at least four (4") inches. Watering shall be done during the heat of the day to prevent wilting.

The first mowing shall not be attempted until the Sod is firmly rooted and secure in place. Not more than forty percent (40%) of the grass leaf shall be removed by mowing. The grass height shall be maintained between one and one-half inches (1 1/2") and three inches (3"), as directed by the Engineer, until Substantial Completion. Any unsatisfactory Sod shall be removed and replaced at the Contractor's expense.

SUBMITTALS: Submittals shall be as per the S-Pages.

Sod Mix: The Contractor shall submit a document from the sod source for approval prior to delivery of sod to the site showing the seed composition and percentages of each grass type proposed.

Amendments: The Contractor shall submit proposed soil amendments for approval prior to delivery.

Invoices: The Engineer reserves the right to request Contractor's invoices for all products used in this item.

MEASUREMENT AND PAYMENT: The quantity of **SOD NEW LAWN** to be paid for under this Item shall be the number of **SQUARE FEET** of sod furnished, placed, and maintained in accordance with the plans and specifications, to the satisfaction of the Engineer.

The price bid shall be a unit price per **SQUARE FOOT** of Sod and shall include the cost of all labor, materials, and equipment necessary or required to prepare the sod bed, incorporating Limestone (where needed), Commercial Fertilizer Low Phosphorous (Slow Release), dispose of surplus materials, furnish, lay, maintain, and water Sod and all work incidental thereto, in accordance with the plans and specifications, to the satisfaction of the Engineer.

Topsoil shall be paid for separately. Compost (where required per test results for existing soil) shall be paid for under its respective contract item. The price of water, regardless of the source, shall be considered part of the bid price.

Payment for work performed under this item shall be made as follows:

40% - after preparation of sod bed

30% - after sodding and rolling

10% - after second application of fertilizer

20% - at Substantial Completion, having maintained and watered new lawn to the satisfaction of the Engineer.

Item No.	Item	Pay Unit
PK-ESCR 809	SOD NEW LAWN, SPORTS FIELDS	S.F.

END OF SECTION

SECTION PK-ESCR 811 – CONCRETE PAVERS ON CONCRETE BASE

WORK: Under these Items, the Contractor shall furnish and install **CONCRETE PAVERS ON CONCRETE BASE** in accordance with the plans, specifications, and directions of the Engineer.

PATTERN: The layout of the pavers shall be subject to approval by the Engineer. Layout patterns and paver designs are as indicated on the plans. All edges, borders, and corners of the paved area shall be finished to true and neat lines. Special cutting, soldier courses, color patterns, various shapes, and variations in size and finish are all to be included in the square yard price bid.

MATERIALS:

Pavers: The pavers shall be manufactured from high quality, steam cured, pre-cast concrete having a minimum compressive strength of 8,000 p.s.i. and maximum water absorption of 5 percent. Unless otherwise noted on the plans, all pavers shall be hexagonally shaped concrete blocks eight inches (8") across flats and three inches (3") in thickness, with a permissible plus or minus tolerance of one-sixteenth inch (1/16") in any dimension. All pavers shall have a 1/16" bevel and spacer lugs to provide joint consistency. All pavers to accommodate pedestrian and vehicular traffic and have an SRI value in the range of 22 to 42. All pavers shall be as indicated on the plans or approved equal. All pavers used shall be of the same manufacturer. Refer to drawings for paver colors. Design requires four paver colors to create a gradation across the esplanade using charcoal, limestone gray, natural charcoal blend, and a white gray with darker gray/green and white flecks. All pavers shall have Tudor finish.

Aggregate Base Course: The aggregate base course shall be as shown on the plans and details.

Concrete Base: The concrete base shall be as shown on the plans and details. Concrete mix per Section ESCR-4.06.

Bituminous Setting Bed: Asphalt cement to be used in the bituminous setting bed shall conform to PGA 64-22, ASTM D6373 for Performance Graded Asphalt.

The fine aggregate to be used in the bituminous setting bed shall be clean, hard sand with durable particles and free from adherent coatings, lumps of clay, alkali salts and organic matter. It shall be uniformly graded from "coarse" to "fine" and all passing the No. 4 sieve and meet the gradation requirements when tested in accordance with the standard method of test for sieve or screen analysis of fine and course aggregates ASTM C136.

The dried fine aggregate shall be combined with hot asphalt cement, and the mix shall be heated to approximately 3000 F. at an asphalt plant. The approximate proportion of materials shall be seven (7%) percent cement asphalt and ninety-three (93%) percent fine aggregate. Each ton shall be apportioned by weight in the approximate ratio of 145-lbs. asphalt to 1,855-lbs. sand. The Contractor shall determine the exact proportions to produce the best possible mixture for construction of the bituminous setting bed to meet construction requirements.

Tack Coat: Tack coat shall be # 237 2% Neo-Asphalt, Brush Grade as manufactured by Hanover Architectural Products, Hanover, PA, or approved equal. Tack coat shall be an asbestos free, cold applied, rubberized asphalt cement, and shall consist of two percent (2%) neoprene rubberized asphalt with 1500 softening point and 6.5 percent (6.5%) inorganic material.

Sand: Sharp, washed sand with 100 percent passing No. 16 (1.18-mm) sieve.

Inspection: Equipment, materials and preparation of the mixtures will be subject to inspection and approval at the refineries and plant as may be directed. In conjunction therewith, the Contractor shall employ the services of an approved inspection service for the purpose of

providing plant certification of the asphalt pavement mixture conformance to these specifications. The inspection services shall be under the jurisdiction of and shall report directly to the Engineer for approval

Tests: Unless otherwise specifically provided, tests of materials shall be made in accordance with the latest specifications of the ASTM.

Transportation: Shipments of material shall be made in tight vehicles previously cleaned of all foreign material, and delivered to the work, so that it will not become contaminated in any way.

Joint Filler: Upon the completion of the work of laying the blocks in each section to the satisfaction of the Engineer, the surface of the blocks shall be swept clean, and the joints filled with fine sand. All joints shall be filled the same day as the blocks are laid. Filler shall not be applied if the blocks are wet or if the air conditions are such that the fill does not readily enter the joints. Filler shall be well worked into the joints by means of squeegees or other approved devices operating slowly backward and forward. Squeegeeing shall continue until the joints are flush with top surface. Immediately after the joints are filled, the pavement shall be lightly sprayed and cleaned.

INSTALLER QUALIFICATIONS: A firm with a minimum of 10 years documented experience in the installation of concrete pavers, similar to the complexity of the design indicated for this project and with a record of successful performance. Include lists of completed projects with project names and addresses, names and addresses of architects and owners, and other information specified.

INSTALLATION:

Placement: The pattern for placement of pavers shall be that indicated on plans or implied by shape of paver. All edges, borders and corners of paved areas shall be finished to true and neat lines. Pavers shall be clean of all adhering material when placed. Pavers which, in the opinion of the Engineer, are not satisfactorily clean shall be well washed before being placed.

Testing: After a sufficient area of pavement has been laid, as determined by the Engineer, the surface shall be tested with a ten foot straight edge laid parallel with the center line and any depression exceeding one-quarter (1/4) inch shall be corrected and brought to the proper grade. All stones disturbed in making replacements or correcting depressions shall be settled into place by carefully ramming or tamping to grade by the use of a hand tamper applied upon a two (2") inch board.

Subgrade Preparation: The subgrade shall be compacted with equipment that will yield the following density:

Cohesive Subgrade - Minimum of 95% of AASHO T 180 Method D density
Cohesionless Subgrade - Minimum of 100% of AASHO T 180 Method D density

The Contractor shall remove from the subgrade all debris, foreign and other undesirable material which interferes with satisfactory construction. The fine grade shall not be muddy or otherwise unsatisfactory when the base course material is placed upon it. If the fine grade becomes rutted or displaced, due to any cause whatsoever, the Contractor shall regrade same without additional payment.

Installation of Bituminous Setting Bed: To install the setting bed over the surface of the base, place three-quarter inch (3/4") deep control bars directly over the base course. If grades must be adjusted, set wood chocks under depth control bars to proper grade. Set two bars parallel to each other approximately 11 feet long (2" x 6" board). The depth of control bars must be set carefully to bring the paver, when laid, to the proper grade.

Place some bituminous material between the parallel depth control bars. Pull this bed with the striking board over these bars several times. After each passage, low porous spots must be

showered with fresh bituminous materials to produce smooth, firm and even setting bed. As soon as the initial panel is completed, advance the first bar to the next position in readiness for striking the next panel. Carefully fill any depressions that remain after removing the depth control bars and wood chocks.

Bed shall be spread in a continuous professional manner. Installation of base in spotted, different and isolated areas will not be accepted. Bed depth greater than one and one eighth inch (1-1/8") will not be acceptable. After setting bed has cooled, it shall be rolled by hand with a one hundred pound (100 lb.) roller to eliminate sponginess and to prepare the surface for the installation of the tack coat. Setting bed shall be protected against all pedestrian traffic and construction equipment to ensure a level surface for setting pavers.

Tack Coat: The neoprene-modified asphalt adhesive tack coat shall be applied by mopping, squeegeeing, or troweling over the top of the bituminous setting bed so as to provide a bond between the bituminous setting bed and the paver.

Setting Pavers: When modified, asphalt adhesive is dry to touch, carefully place the pavers by hand, in straight course, with hand tight joints and uniform top surfaces, keeping full alignment according to the patterns shown on the plans or implied by the shape of the paver. In no case shall the bituminous setting bed in front of the pavement be disturbed or walked on during the laying of the blocks.

Joint Filler: Upon the completion of the work of laying the blocks in each section to the satisfaction of the Engineer, the surface of the blocks shall be swept clean, and the joints filled with a mixture of one (1) part Portland Cement and ten (10) parts sand thoroughly dry mixed in an approved batch mixer for not less than one and one-half (1-1/2) minutes.

All joints shall be filled the same day as the blocks are laid. Filler shall not be applied if the blocks are wet or if the air conditions are such that the filler does not readily enter the joints. Filler shall be well worked into the joints by means of squeegees or other approved devices operating slowly backward and forward. Squeegeeing shall continue until the joints are full. Immediately after the joints are filled, the pavement shall be swept clean.

DEFECTS: Where defects in composition, compression or finished appear in the complete work, such finished areas shall be removed to the full depth of the course and the defective material replaced with the required thickness of pavement at the expense of the Contractor for such removing and replacing.

COLD WEATHER: Asphalt base course shall be mixed and placed in accordance with minimum placement temperature as specified in the following table. Unless notified by the Engineer in writing, no material shall be mixed or placed when the temperature is at, or lower than 50 °F.

MINIMUM PLACEMENT TEMPERATURES

MAT THICKNESS IN INCHES

SURFACE TEMP. (F)	1/2"	3/4"	1"	1 1/2"	2"	3"
			TEMPERATURE OF THE MIX			
+32-40	--	--	--	305	295	280
+40-50	--	--	310	300	285	275
+50-60	--	310	300	295	280	270
+60-70	310	300	290	285	275	265
+70-80	300	290	285	280	270	265
+80-90	290	280	275	270	265	260
+90	280	275	270	265	260	255
ROLLING TIME MINUTES	4	6	8	12	15	15

PRECIPITATION PROBABILITY: Placement of bituminous paving materials shall not be scheduled when the Precipitation Probability, obtained by the Contractor from the U.S. Weather Bureau within three (3) hours prior to the start of such operations, equals or exceeds fifty percent (50%). The Contractor shall notify the Engineer of the exact time at which the above information was obtained.

SAMPLES: The Contractor shall furnish two (2) samples of each paver type before starting work for approval of the Engineer. Pavers used on site shall conform to the approved samples, in the opinion of the Engineer.

PRODUCT DATA: The Contractor to provide product data for each variety of each paver and paver accessories.

SHOP DRAWINGS: The Contractor to provide shop drawings to include layout plans, color gradation, patterning, color selection, sections, details, and interfaces with other Work. Drawings to include connection to waterfront structures, bulkhead, precast step downs, walls, stairs, buildings, and concrete curbs. The Contractor to provide shop drawings at eight (8) locations: north of Fields 1 & 2, Fire Boat House, Williamsburg Bridge BBQ, Houston stepdown, south of the track, north of the track, 10th Street BBQ, and 10th Street Comfort Station.

MOCKUP: Build mockups to set quality standard for fabrication and installation. The Contractor shall provide mockups at eight (8) locations of 30' by 10' areas. Build mockups to show the gradation of two (2) colors, three (3) colors and four (4) color changes, and interface with adjacent vertical surfaces. The Contractor shall provide mock-ups for the following esplanade areas: north of Fields 1 & 2, Fire Boat House, Williamsburg Bridge BBQ, Houston stepdown, south of the track, north of the track, 10th Street BBQ, and 10th Street Comfort Station. Approved mockups may become part of the completed work if undisturbed at time of substantial completion.

MEASUREMENT AND PAYMENT: The quantity of **CONCRETE PAVERS** to be paid for under these Items shall be the number of **SQUARE YARDS** of each type of pavement constructed in accordance with the plans, specifications, and directions of the Engineer.

The price bid shall be a unit price per **SQUARE YARD** of Concrete Pavers and shall include the cost of all labor, materials, equipment and incidental expenses necessary to complete the work, including concrete pavers, setting bed and expansion joints, concrete base, all in accordance with

the plans and specifications to the satisfaction of the Engineer.

Aggregate base course (PK-ESCR 748) shall be paid for separately under its own contract item.

Item No.	Item	Pay Unit
PK-ESCR 811A	**CONCRETE PAVERS TYPE 1**	**S.Y.**
PK-ESCR 811B	**CONCRETE PAVERS TYPE 2**	**S.Y.**
PK-ESCR 811C	**CONCRETE PAVERS TYPE 3**	**S.Y.**

END OF SECTION

SECTION PK-ESCR 907 – FISH CLEANING TABLE

PK-ESCR 907.1. INTENT

This section describes the furnishing and installation of the Fish Cleaning Table in accordance with the plans, specifications and directions of the Engineer. □

PK-ESCR 907.2. DESCRIPTION

A. Under this section, the Contractor shall furnish and install the following items:
   a. Fish Cleaning Table
   b. Fish Cleaning Table Accessories
      i. Plumbing Piping
      ii. Pedal Valve & Accessories
      iii. Stainless Steel Wire Mesh
      iv. Stainless Steel Funnel
   c. Coordination with adjacent work, utility connections, testing, adjusting as needed, and inspection.

PK-ESCR 907.3.1. REFERENCES

A. ASTM Material Standards:

   a. ASTM A 36 – Standard Specification for Carbon Structural Steel

B. ASTM Testing Standards:

   a. ASTM B 117 – Standard Practice for Operating Salt Spray (Fog) Apparatus
   b. ASTM D 522 – Standard Test Methods for Mandrel Bend Test of Attached Organic Coatings
   c. ASTM D 523 – Standard test Method for Specular Gloss
   d. ASTM D 2247 – Standard Practice for Testing Water Resistance of Coatings in 100% Relative Humidity
   e. ASTM D 2794 – Standard Practice for Testing Water Resistance of Organic Coatings to the Effects of Rapid Deformation (Impact).
   f. ASTM D 3359 – Standard Test Methods for Measuring Adhesion by Tape Test
   g. ASTM D 3363 – Standard Test Methods for Film Hardness by Pencil Test
   h. ASTM G 155 – Standard Practice for Operating Xenon Arc Light Apparatus for Exposure of Non-Metallic Materials

C. ISO Testing Standards:

   a. ISO 1520 – Paints and Varnishes – Cupping Test
   b. ISO 2815 – Paints and Varnishes – Buchholz Indentation Test

PK-ESCR 907.3.2. SUBMITTALS

All submittals shall be as per the S-Pages.

A. Product Data: Submit manufacturer's product data, storage and handling requirements and recommendations, installation methods and available colors, styles, patterns, and textures.

B. Shop Drawings: Show fabrication and installation of Fish Cleaning Table. Include plans and elevations for the Fish Cleaning Table and control mechanisms. Include details, attachments, connectors, anchoring and connecting hardware, connections to water and sewer, and lightening grounding protection. Indicated field and shop welds.

   a. Include Valve Schedule listing type of valve, manufacturer's model number and size, for each valve type required.
   b. Indicate welded connections by AWS standard symbols. Detail loose and cast-in hardware, inserts, connections, and joints, including accessories.

C. Samples: Submit manufacturer's samples of materials, finishes, and colors, including three (3) samples of specified color/finish as applied to an eight inch (8") by eight inch (8") square of specified metal for approval by the Engineer.

D. Qualification Data: For firms and persons to demonstrate their capabilities and experience. Include qualifications below:

   a. Work of this Section shall be fabricated by an experienced fabricator or manufacturer, who has been engaged in the production and installation of stainless steel furnishings and/or site amenities for at least five (5) years.
   b. Qualifications of Welders: Qualify welders in accordance with AWS for each process, position, and joint configuration. Each operator shall have been qualified as prescribed by AWS. Welder qualification shall include passing the bend test. Require welders to retake the qualification test if, as determined by the Engineer, there is a reasonable doubt as to the proficiency of the welder. If the welder does not re-qualify, that welder shall not perform any welding for project work. Contractor shall pay all costs associated with welder qualification.
      i. Requirements for welder qualifications shall include conditions specified for welding procedures specified in Article "Submittals" including testing standards and witness / approval by independent third party.
      ii. Welding Certificates: Copies of certificates for welding procedures and personnel.
   c. Qualification of Finishers: Firm experienced in successfully finishing steel fabrications similar to that indicated for this Project, with sufficient production capacity to produce required units without causing delay in the Work.
   d. Qualifications of Installers: Installers to have no less than three (3) years of documented experiences who has completed installation of stainless steel element work similar in material, design, and extent to that indicated for this Project and whose work has resulted in construction with a record of successful in-service performance.

PK-ESCR 907.3.3. QUALITY CONTROL

A. Thermal Movements: Allow for thermal movements resulting from the following maximum change (range) in ambient and surface temperatures by preventing buckling, opening of joints, overstressing of components, failure of connections, and other detrimental effects. Base calculation on surface temperatures of materials due to both solar heat gain and nighttime-sky heat loss.

   a. Temperature (Range): 120 deg F, ambient; 180 deg F, material surfaces

B. Control of Corrosion: Prevent galvanic action and other forms of corrosion by insulating metals and other materials from direct contact with incompatible materials.

C. Qualify welding processes and welders in accordance with AWS D1.1 "Structural Welding Code – Steel", D1.3 "Structural Welding Code – Sheet Steel", and D1.2 "Structural Welding Code – Aluminum".

D. Defective Work: Work that does not comply with the requirements, including strength, manufacturing tolerances, and finishes, are unacceptable. Replace with a Fish Cleaning Table and/or Fish Cleaning Table Accessories that comply with requirements.

PK-ESCR 907.3.4. DELIVERY, STORAGE, AND HANDLING

A. Delivery:
   a. Deliver materials to site in manufacturer's original, unopened containers and packaging, with labels clearly identifying product name and manufacturer.
   b. Schedule delivery and installation of Fish Cleaning Table and accessories to coordinate with work adjacent to the Fish Cleaning Table.

B. Storage: Store materials in a clean, dry area in accordance with the manufacturer's instructions. Keep materials in manufacturer's original, unopened containers and packaging until installation.

C. Handling: Protect materials and finish during handling and installation to prevent damage.

PK-ESCR 907.3.5. WARRANTY

A. Warranty Information:
   a. Products will be free from defects in material and/or workmanship for a period of three (3) years from the date of substantial completion.
   b. The warranty may exclude damage resulting from accident, misuse, tampering, negligence, or abuse.
   c. Products shall be repaired or replaced the satisfaction of the Engineer any items found defective upon inspection by an authorized manufacturer service representative and Engineer.
   d. Fabricator to provide a five-year (5) warranty against the effects of freeze-thaw.

PK-ESCR 907.3.6. PRODUCTS

A. Fish Cleaning Table: as fabricated by Forms+Surfaces, 30 Pine Street, Pittsburgh, PA 15223; Contact: Jason Bajor, 914-589-6322, Jason.bajor@forms-surfaces.com; or approved equal.

B. Fish Cleaning Table Accessories:
   a. Stainless Steel Pipe and Fittings
      i. Stainless Steel Pipe for Welding: Standard weight, Schedule 40, Stainless Steel Type 316L, maximum carbon content 0.03%.
      ii. Specification: ASTM A-358/ASME SA-358.
      iii. Range: ASTM A-312.
   b. Pedal Valve & Accessories
      i. Pedal valve to be single pedal valve floor mounted, one half inch (1/2") inlet and one half inch (1/2") outlet, as manufactured by "T&S Brass", #B-0507 or approved equal.
      ii. Valve Box, Attachments, & Accessories
   c. Stainless Steel Wire Mesh: two and three quarter inch (2 ¾") stainless steel mesh, 11 gal. (0.120" dia.)
   d. Stainless Steel Funnel: 6" diameter stainless steel funnel for drain

PK-ESCR 907.3.7. FINISHES

A. Fish Cleaning Table: All visible surfaces to have dull #6 Satin Finish (RMS 32 max surface finish).

PK-ESCR 907.4. METHODS

The following methods of fabrication and installation shall be used.

A. Fabrication:
   a. General: Fabricate Fish Cleaning Table and accessories to comply with the requirements indicated for design, dimension, member sizes and spacing, details, finish, and anchorage.
   b. Assemble Fish Cleaning Table to the greatest extent possible to minimize field splicing, welding, and assembly. Disassemble units only as necessary for shipping and handling limitations. Clearly mark units for reassembly and coordinated installation. Use connections that maintain structural value of joined pieces.
   c. Welded Connections: Where shown on details and approved shop drawings, fabricate Fish Cleaning Table and accessories for connecting members by welding. Cope components at perpendicular and skew connections to provide close fit, or use fittings designed for this purpose. Weld connections continuously to comply with the following:
      i. Use materials and methods that minimize distortion and develop strength and corrosion resistance of base materials.
      ii. Obtain fusion without undercut or overlap.
      iii. Remove flux immediately.
      iv. At exposed connections, finish exposed surfaces smooth and blended so no roughness shows after finishing and welded surface matches contours of adjoining surfaces.

d. Non-welded Connections: Where shown on details and approved shop drawings, fabricate railings and gates by connecting members with concealed mechanical fasteners and fittings, unless otherwise indicated. Fabricate members and fittings to produce flush, smooth rigid, hairline joints.
e. Brackets, Flanges, Fittings, and Anchors: Provide wall brackets, flanges, miscellaneous fittings, and anchors to interconnect Fish Cleaning Table to other work, unless otherwise indicated.
f. Cast-in Anchors, Inserts, Plates, Angles, and Other Anchorage Hardware: Fabricate anchorage hardware with sufficient anchorage and embedment to comply with design requirements. Accurately position for attachment of loose hardware, and secure in place during concrete casting operations. Locate anchorage hardware where it does not affect position of main reinforcement or concrete placement.
g. Provide inserts and other anchorage devices for connecting Fishing Cleaning Table and accessories to concrete. Fabricate anchorage devices capable of withstanding loads imposed by movement and due to other factors. Coordinate anchorage devices with supporting structure and lightening protection.
h. Shear and punch metals cleanly and accurately. Remove burrs from exposed cut edges.
i. Ease exposed edges to a radius of approximately 1/32 inch (1 mm) unless otherwise indicated. Form bent-metal corners to smallest radius possible without causing grain separation or otherwise impairing the Work.
j. Cut, reinforce, drill, and tap components, as indicated, to receive finish hardware, screws, and similar items.
k. Provide weep holes and other means to drain entrapped water in hollow sections of railings and gates that are exposed to exterior or to moisture from condensation or other sources.
l. Fabricate joints that will be exposed to weather in a watertight manner.
m. Close exposed ends with prefabricated end fittings as necessary.

B. Examination:
a. Examine areas to receive the Fish Cleaning Table. Examine substrates and conditions with requirements for installation tolerances, true and level bearing surfaces, and other conditions affecting performance.
b. Notify Engineer of conditions that would adversely affect installation or subsequent use. Proceed with installation only after unsatisfactory conditions have been corrected. Do not begin installation until acceptable conditions are corrected and acceptance verified in writing by Engineer
c. Do not install Fish cleaning Table and accessories until the supporting concrete has attained minimum design compressive strength.

C. Installation:
a. Connect to plumbing prior to installation of Fish Cleaning Table.
b. Install Fish Cleaning Table and accessories in accordance with manufacturer's instructions at locations indicated on the Drawings. Remove temporary shims, wedges, and spaces as soon as possible after anchoring and grouting are completed.
c. Fit exposed connections together to form tight, hairline joints.
d. Perform cutting, drilling, and fitting required to install Fish Cleaning Table and accessories. Set Fish Cleaning Table and accessories in location, alignment, and elevation; measured from established lines and levels and free from rack.
    i. Do not weld, cut, or abrade surfaces of handrail, railings, and gates components that have been finished after fabrication and that are intended for field connection by mechanical or by other means without further cutting or fitting.
    ii. Install Fish Cleaning Table and accessories plumb and level within a tolerance of one sixteenth inch (1/16") in three feet (3') [2 mm in 1m].
e. Tack-weld all exposed non-tamperproof nuts.
f. Anchoring
    i. Grounding: Fish Table shall have provided at minimum one grounded connection.

ii. Fasten Fish Cleaning Table and accessories to surfaces as shown on drawings.
iii. Grouting Connections: Grout connections where required or indicated. Retain grout in place until hard enough to support itself. Pack spaces with stiff grout material, tamping until voids are filled. Place grout to finish smooth, level, and plumb with adjacent surfaces. Keep grout damp for a minim of 24 hours after initial set. Promptly remove grout material from exposed surfaces before it affects finishes or hardens.

g. Valves: Install valves of type and kind as indicated on the drawings, each complete with operator and accessory items as required by the actual location. Size valves the same size as the piping in which they are installed, unless otherwise indicated.

D. Testing:
   a. The entire system shall be pretested and inspected. This shall include maintaining full pressure on the entire system for no less than one (1) hour. Following the pressure test, it is imperative that all components be flushed by running the water supply through the fixture for a period of time to ensure that all debris has been removed from the entire system and this is to be done in the presence of the Engineer.
   b. Table shall be level with positive drainage to drain. If positive drainage is not achieved, the table must be re-set.

E. Adjusting:
   a. Finish Damage: Repair minor damages to finish in accordance with manufacturer's instructions and as approved by Engineer.
   b. Component Damage: Remove and replace damaged components that cannot be successfully repaired as determined by Engineer.

F. Cleaning:
   a. Clean exposed Fish Cleaning Table and accessories after erection to remove weld marks, other markings, dirt, and stains.
      i. Wash and rinse according to manufacturer's written recommendations. Protect other work from staining or damage due to cleaning operations.
   b. Do not use harsh cleaning materials or methods that could damage or change the appearance of approved material finishes.

G. Protection: Protect installed Site Furnishings to ensure they will be without damage or deterioration at time of Substantial Completion.

PK-ESCR 907.5. MEASUREMENT

The quantity of **FISH CLEANING TABLE** to be paid for shall be the **LUMP SUM** furnished an installed complete, in accordance with the plans, specifications, and directions of the Engineer.

PK-ESCR 907.6. PRICES TO COVER

The price bid shall be a **LUMP SUMP** for **FISH CLEANING TABLE** and all accessories and shall include the cost of all labor, materials, equipment, and incidentals required to complete the work, including unclassified excavation, concrete footings, instructional signage, handling, protection, fabrication, finishing, steel piping, connection to utilities, valve and valve box installation, testing, and all submittals, including delivery to site and all incidental expenses necessary to complete the work in accordance with the Contract Drawings, approved shop drawings, and specifications, to the satisfaction of the Engineer.

Payment will be made under:

Item No.	Item	Pay Unit
PK-ESCR 907	FISH CLEANING TABLE	LS

END OF SECTION

SECTION PK-ESCR 912 – NATURE EXPLORATION FABRICATION

PK-ESCR 912.1. INTENT

This section describes the fabrication of the elements included in Nature Exploration, including, but not limited to, Log Scramble, Tree Round Border, Tree Round Maze, and Tree Round Seat, all in accordance with the plans, specifications and directions of the Engineer. □

PK-ESCR 912.2. DESCRIPTION

Under this section, the Contractor must fabricate and deliver the Nature Exploration elements made from trees salvaged as specified in Section PK-ESCR 968 under Item No. PK-ESCR 916, all in accordance with the details indicated in the Contract Drawings, specified, or directed by the Engineer.

PK-ESCR 912.3. MATERIALS

Unless otherwise specified herein, all materials shall conform to applicable portions of and shall meet the requirements of the NYCDOT Standard Highway Specifications.

1. Salvaged Wood: For tree salvage for Nature Exploration, see Specification Section PK-ESCR 968 Tree Salvage and Item No. PK-ESCR 916 Tree Selection, Storage and Preparation for Nature Exploration.
    a. Species of salvaged wood to be used for fabrication of Nature Exploration elements to be of the genii *Quercus* and *Gleditisia*, see Specification PK-ESCR 968 Tree Salvage, Item No. PK-ESCR 916.
2. End Sealer (Mineral Wax): Exterior grade end grain sealing wax, water repellent to minimize water absorption, dirt repellent, odorless, dries to a clear finish. To be free of heavy metals, and be a non-toxic child safe preservative. May not contain arsenic, pentachlorophenol, creosote or similar toxic chemicals as their active ingredient shall not be used.
    a. Provide “Anchorseal” clear wax sealer, an aqueous wax sealer, as supplied by U-C Coatings, Buffalo, NY, (888-363-2628); Waxwel Paraffin Blocks as supplied by Fabrication Enterprises Inc., White Plains, NY, (800-431-2830); Gulfwax Paraffin Wax as supplied by Royal Oak Enterprises, Roswell, GA (678-461-3200); or an approved high quality paraffin; to be applied to all shop and field cut ends of hardwood surfaces.
3. Penetrating Sealer: To be a transparent, water-repellent preservatives, penetrating wood sealer. Finish of wood to be clean, golden-tan color; treatment to reduce warping and cracking, and prevent water staining at edges. Sheen to be satin or matte. To be free of heavy metals, and be a non-toxic child safe preservative. May not contain arsenic, pentachlorophenol, creosote or similar toxic chemicals as their active ingredient shall not be used.

PK-ESCR 912.3.1. REFERENCES

1. American Softwood Lumber Standard: Comply with DOC PS 20 and with grading rules of lumber-grading agencies certified by ALSC's Board of Review as applicable.
    a. Timber Species and Grade: *Quercus* sp. (Mixed oak, Northern red oak, Red oak, White oak), to achieve standards set by NeLMA (Northeaster Lumber Manufacturers Association) OR NHLA (National Hardware Lumber Association).
2. ASTM: American Society for Testing and Materials
3. ANSI: American National Standards Institute
4. AITC: American Institute of Timber Construction

PK-ESCR 912.3.2. SUBMITTALS

1. Statement of Qualifications: to be submitted to identify and exhibit Nature Exploration Fabrication and wood fabrication qualifications as specified in Article “Qualifications” herein.

2. Product Data: for review and approval prior to fabrication of Nature Exploration elements. Provide product data for the following:

    a. Fabricator facilities: Submit complete data on fabricator facilities for Nature Exploration elements specified. Include information of location, production capabilities, and the nature and character of wood fabrication that has been previously been made.

    b. End Sealer (Mineral Wax): submit complete product data, manufacturer, manufacturer's test reports and certifications, and material safety data sheet (MSDS); manufacturer instructions, maintenance and operations instructions, and re-application instructions and timeframe if necessary.

    c. Penetrating Sealer: submit complete product data, manufacturer, manufacturer's test reports and certifications, and material safety data sheet (MSDS); manufacturer instructions, maintenance and operations instructions, and re-application instructions and timeframe if necessary.

3. Maintenance & Warranty: Submit maintenance data and manufacturer's warranty in accordance with the requirements of the S-Pages.

4. Shop Drawings: Submit drawings showing sizes of each type of Nature Exploration element including, but not limited to, Log scramble, Tree Round Maze, Tree Round Border, and Tree Round Seat. Drawings to include plans, sections, showing all layout, dimensions, attachments and embedments. Drawings shall indicate salvaged tree species to be used for each Nature Exploration element, including full range of finishes and sealants.

5. Fabricated Element Submittal:

    a. After the approval of the shop drawings by the Engineer, submit one sample fully finished for each:

        i. Log Scramble

        ii. Tree Round Border

        iii. Tree Round Maze

        iv. Tree Round Seat

6. Nature Exploration Log and Fabricated Elements Chain of Custody: Salvaged logs (and Nature Exploration elements) to remain in the Contractor's custody until fabrication and installation on site are completed as per specification Sections PK-ESCR 968 Tree Salvage and PK-ESCR 913 Nature Exploration Installation. The chain of custody must be included with the Nature Exploration delivery paperwork and submitted to the Engineer.

PK-ESCR 912.3.3. QUALITY CONTROL

1. Fabricator Qualifications: Nature Exploration Fabrication and wood fabricator shall be a firm or firms that have successfully supplied salvaged wood fabrications of material type and condition, similar to the quality specified, and in the quantity shown for a period of not less than 10 years. Nature Exploration elements shall be obtained from fabricator or fabricators capable of furnishing quantity, sizes, and quality of salvaged wood fabrications required.

PK-ESCR 912.3.4. DELIVERY, STORAGE, AND HANDLING

1. Delivery to Fabrication Facility: is covered under specification Section PK-ESCR 968, Item No. PK-ESCR 916.

2. Handling and Unloading: Handle salvaged wood and Nature Exploration elements to prevent breakage, soiling, or other damage. Do not use pinch or wrecking bars without protecting the edges of salvaged wood and Nature Exploration elements with appropriate materials. Lift with wide-belt type slings wherever possible. Do not use wire rope or ropes containing tar or other substances which may cause staining.

3. Storage and Protection:

    a. Protect salvaged wood and Nature Exploration elements during storage and fabrication against moisture, soiling, staining, and physical damage.

    b. Store materials under cover and protected from weather and contact with damp or wet surfaces. Stack salvaged trees flat with spacers between each bundle to provide air circulation. Stack Nature Exploration fabricated elements flat with spacers between each bundle to provide air circulation. Provide for air circulation around stacks and under coverings.

4. Delivery from Fabrication Facility to Site: Schedule delivery of fabricated Nature Exploration elements to avoid extended on-site storage and to avoid delaying the Work at the approval of the Engineer. If necessary on-site, store materials under cover and protected from weather and contact with damp or wet surfaces. Provide for air circulation within and around stacks and under temporary coverings.

PK-ESCR 912.3.5. WARRANTY

1. Products to be free from defects in material and/or workmanship for a period of three (3) years from the date of substantial completion. A three (3) year warranty shall be submitted, and in turn handed over to the Engineer.

2. The warranty may exclude damage resulting from accident, misuse, tampering, negligence, or abuse.

3. Products shall be repaired or replaced to the satisfaction of the Engineer, any items found defective upon inspection by an authorized fabricator service representative and Engineer.

PK-ESCR 912.4. METHODS

Work of this section includes all labor, materials, and services necessary to provide fabrication of Nature Exploration elements as shown in the Contract Drawings and/or specified herein, including by not limited to the following:

1. Field Measurements: Coordinate Nature Exploration Fabrication work and related layouts with trades and work preceding Nature Exploration installation and take additional field measurements as necessary to accommodate conditions.

2. Provisions for Examinations at the Shop: Nature Exploration elements will be made available for inspection by the Engineer prior to delivery to the site. Contractor will be responsible for arranging the schedule for the inspection trips to shop by Engineer.

3. Inspection On-Site, At Delivery: The Engineer will inspect Nature Exploration elements upon delivery to the site prior to installation. Allow a time duration on-site, as approved by the Engineer, for inspection and layout adjustment prior to installation.

4. Visual Criteria for Nature Exploration Elements: All examinations, selections, and approvals shall be for the purpose of achieving a final appearance, texture, and smoothness of Nature Exploration elements with greatest possible uniformity, and will be based on the following criteria:

    a. All Nature Exploration elements shall be of sound stock and uniform texture, and shall be free from holes, seams, chips, gashes, stains, and other defects that are not natural to the salvaged wood specified and that would impair the strength, durability, and appearance of the work, as determined by the Engineer.

    b. Inherent variations characteristic of the salvaged wood shall be brought to the attention of the Engineer at the time the samples are submitted for approval and shall be subject to the approval of the Engineer.

    c. Salvaged wood shall be selected for species as specified in Section PK-ESCR 968.

5. Nature Exploration Fabrication:

a. Provide Nature Exploration elements as indicated by Contract Drawings of solid wood units of sizes indicated with natural finish appearance. Provide Nature Exploration Elements in maximum lengths and sizes possible.

b. Salvaged Wood Piece Selection:

   i. All timbers shall be fine-grained with at least eighty (80) percent of the pieces possessing eight (8) annular rings to the inch, the remainder having at least six (6) rings to the inch.

   ii. There shall be no loose knots, knotholes, shake, unsound wood, white specks or honeycomb allowed.

   iii. Except as noted, other characteristics and limiting provisions are to be in accordance with Paragraph 131-A “Standard Grading Rules for West Coast Lumber”.

   iv. Provide Nature Exploration Elements in maximum lengths and sizes possible.

c. Salvaged Wood Drying Procedure:

   i. De-bark the lumber, mill, and shape to be one-half (1/2) inch larger than the actual size required. Provide dressed timber, unless otherwise indicated.

   ii. Air dry in a controlled indoor environment for six (6) to nine (9) months. Kiln drying is not acceptable.

   iii. Maximum moisture content: nineteen (19) percent after air drying.

   iv. Mill a second time to final actual dimensions required by Contract Drawings. Finish exposed surfaces to remove planing or surfacing marks, and to provide a finish equivalent to that produced by machine sanding with No. six hundred (600) grit sandpaper.

   v. Cull out unacceptable pieces.

d. Nature Exploration Element Fabrication:

   i. Surface shall be milled to size and surface shall be smooth, uniform and without imperfections as approved by the Engineer.

   ii. Fabricate with provision for element to element interconnection as shown in Contract Documents.

   iii. Salvage trees intended for Nature Exploration Elements Tree Round Border and Tree Round Maze shall be lathe-turned to a consistent diameter as shown in the Contract Drawings with exposed ends trimmed and eased to a minimum one-half (1/2) inch radius.

   iv. Salvage trees intended for Nature Exploration Elements Log Scramble and Tree Round Seat shall have exposed surfaces finished to remove planing or surfacing marks, and to provide a finish equivalent to that produced by machine sanding with No. six hundred (600) grit sandpaper. All exposed edges to be eased to a minimum one-half (1/2) inch radius.

   v. Provide pre-drilled holes, pre-cut and finished slot connections, for all connections or installations as shown in the Contract Drawings and/or approved Shop Drawings.

   vi. All corners and exposed faces shall be rubbed or shaped to remove any sharp edges, splinters, in a manner approved by the Engineer and that will not show tool marks. All exposed edges of cut trunks shall be rounded with 1/2” radius, ground smooth, and free of splinters.

e. Nature Exploration Element Finish:

i. All Nature Exploration elements shall treated with a non-toxic child safe preservative after all fabrication is completed. Preservatives containing arsenic, pentachlorophenol, creosote or similar toxic chemicals as their active ingredient shall not be used.

ii. End Grain Sealing: An end sealer (mineral wax) shall be applied to all shop and field cut ends of hardwood surfaces. Exterior grade end grain sealing wax, water repellent to minimize water absorption, dirt repellent, odorless, dries to a clear finish.

1. Timber end grain shall be clean, dry, and free from surface contaminates that may for a barrier or seal against the end sealer.

2. Apply a sealer to a small test area before beginning. Assess compatibility and end result. Follow manufacturer's instructions at all times.

3. Apply Wood End Sealer with a soft brush. To be applied minimum two (2) coats of sealing wax to achieve minimum one (1) milimeter thick of sealer at all wood end grains. Wipe any excess wax from other areas with a clean, lint-free cloth. Buff to a consistent sheen.

iii. Penetrating Sealing: Use process that includes water-repellent treatment. Use process that does not include water repellents or other substances that might interfere with application of indicated finishes. After treatment, re-dry materials to 19 percent maximum moisture content.

1. Application: Treat all non-end grain Nature Exploration element surfaces unless otherwise indicated.

6. Pre-installation Conference: Conduct conference at project site prior to installation by Nature Exploration Installer (if different), Nature Exploration Fabricator to be in attendance. See specification Section PK-ESCR 913 Nature Exploration Installation for additional information.

PK-ESCR 912.5. MEASUREMENT

The quantity of **NATURE EXPLORATION FABRICATION** for all Nature Exploration elements to be paid for shall be the **LUMP SUM,** fabricated, finished, sealed, and delivered to the site, in accordance with the plans, specifications, and directions of the Engineer.

PK-ESCR 912.6. PRICES TO COVER

The price bid shall be a unit price per **LUMP SUMP** of **NATURE EXPLORATION FABRICATION** shall include the cost of all labor, materials, equipment, insurance, and incidentals required, including coordination with submittals, shop drawings, mock-ups, chain of custody, handling, protection, field measurements, fabrication, finishing, and delivery to the site, of all elements for Nature Exploration Fabrication in the sizes indicated, and all incidental expenses necessary to complete the work in accordance with the Contract Drawings and specifications, to the satisfaction of the Engineer.

Tree Salvage and Nature Exploration Installation shall be paid for under their respective item numbers.

Payment will be made under:

Item No.	Item	Pay Unit
PK-ESCR 912	**Nature Exploration Fabrication**	**LS**

END OF SECTION

SECTION PK-ESCR 913 – NATURE EXPLORATION INSTALLATION

PK-ESCR 913.1. INTENT

This section describes the installation of the elements included in Nature Exploration elements, including, but not limited to, Log Scramble, Tree Round Border, Tree Round Maze, and Tree Round Seat, all in accordance with the plans, specifications and directions of the Engineer. □

PK-ESCR 913.2. DESCRIPTION

This Section includes installation of the salvaged, fabricated Nature Exploration elements including, but not limited to, the following:

1. Log Scramble
2. Tree Round Border
3. Tree Round Maze
4. Tree Round Seat

PK-ESCR 913.3. MATERIALS

1. Fabricated Nature Exploration Elements: For fabricated Nature Exploration elements, see specification Section PK-ESCR 912. Fabricated Nature Exploration elements include Log Scramble, Tree Round Border, Tree Round Maze, and Tree Round Seat.
2. Steel Supports and Attachment: All steel supports and attachments shall comply with the requirements of Section ESCR-4.14. Steel support posts shall be of the size and length specified in the Contract Drawings.

PK-ESCR 913.3.1. SUBMITTALS

1. Statement of Qualifications: to be submitted to identify and exhibit Nature Exploration Installer qualifications as specified in Article “Qualifications” herein.
2. Maintenance & Warranty: Submit maintenance data and manufacturer’s warranty in accordance with the requirements of the S-Pages.
3. Samples: Samples for fabricated Nature Exploration elements included in specification Section PK-ESCR 912.
4. Work Plan Submittal: Submit plans indicating anticipated work schedule and detailed work plan approach for Nature Exploration area including, but not limited to, the Log Scramble, Tree Round Border, Tree Round Maze and Tree Round Seats. An approach to coordination with hardscape operations, stone layout and installation, soils and planting operations, irrigation, utilities and lighting to be included in the work plan.
5. Nature Exploration Log and Fabricated Elements Chain of Custody: Salvaged logs (and Nature Exploration elements) to remain in the Contractor’s custody until fabrication and installation on site are completed as per specification Sections PK-ESCR 968 Tree Salvage and PK-ESCR 913 Nature Exploration Installation. The chain of custody must be included with the Nature Exploration delivery paperwork and submitted to the Engineer.

PK-ESCR 913.3.3. QUALITY CONTROL

1. Installer Qualifications: Installer of salvaged wood exploration elements shall be by a firm that can exhibit proof of a minimum of seven (7) years prior successful experience with wood installations of similar material, design, and extent to that indicated for this Project.
    a. Installer Foreman: Installation firm for wood exploration elements of this Project shall have on staff a supervising foreman assigned to this Project before initial installations, who shall have at least 10 years total wood exploration elements experience. Submit detailed resume

of past experience with dates, duration and scope identification, project name and location, and work function of previous projects worked on.

b. Use numbers of skilled workmen equal to work requirements or occasion. The skilled workmen shall be thoroughly trained and experienced in the necessary crafts and shall be completely familiar with the specific requirements and methods needed for performance of the work in this Section.

2. Full Mock-up:
    a. One mock of for each of the following Nature Exploration elements to be mocked-up onsite, including marked out field measurements of adjacent work as necessary:
        i. Log Scramble – one assembly
        ii. Tree Round Border – 10’ by full width of border mock-up required with adjacencies drawn out
        iii. Tree Round Maze – one arc, 15 element minimum
        iv. Tree Round Seat – minimum 5 seats required for mock-up
    b. On-site mock-up to be coordinated with Nature Exploration fabricator (if different).
    c. In person review and approval of mock-up by Engineer is required. Attendance is required of Nature Exploration fabricator at in-person review with Engineer and Nature Exploration installer.

PK-ESCR 913.3.4. DELIVERY, STORAGE, AND HANDLING

1. Delivery: from Nature Exploration fabricator facility to site included in specification Section PK-ESCR 912 Nature Exploration Fabrication.
2. Handling and Unloading: Handle Nature Exploration elements to prevent breakage, soiling, or other damage. Do not use pinch or wrecking bars without protecting the edges of Nature Exploration elements with appropriate materials. Lift with wide-belt type slings wherever possible. Do not use wire rope or ropes containing tar or other substances which may cause staining.
3. Storage and Protection: If necessary on-site:
    a. Protect Nature Exploration elements during storage and construction against moisture, soiling, staining, and physical damage.
    b. Store materials under cover and protected from weather and contact with damp or wet surfaces. Stack Nature Exploration fabricated elements flat with spacers between each bundle to provide air circulation. Provide for air circulation around stacks and under coverings.

PK-ESCR 913.4.4. INSTALLER

Requirements of Installer per section PK-ESCR 913.3.3.1 Installer Qualifications.

PK-ESCR 913.5. METHODS

Work of this section includes all labor, materials, and services necessary to provide fabrication of Nature Exploration elements as shown in the Contract Drawings and/or specified herein, including by not limited to the following:

1. Field Measurements: Coordinate Nature Exploration Fabrication work and related layouts with trades and work preceding Nature Exploration installation and take additional field measurements as necessary to accommodate conditions.
2. Pre-installation Conference: Conduct conference at project site prior to installation.
    a. Contractor, together with the Engineer, shall schedule a meeting between the Contractor, Engineer, Nature Exploration Fabricator, and Nature Exploration Installer (if different) at a time sufficiently in advance of Nature Exploration elements installation to permit coordination. In addition, include in appropriate sequence, representatives of other related work.
    b. At the meeting, review Nature Exploration elements transport to site, coordination with adjacent work and schedule, review quality control requirements including details of

construction, outstanding submittals, shop drawings, approved fabricated element mock-up, contract drawings and specifications, and on site conditions affecting or which may affect installations.

3. Installation: All Nature Exploration elements shall be installed by a qualified installer, experienced in erection of fabricated wood elements and meeting the qualifications specified above.
    a. Erect Nature Exploration elements true and plumb. Provide temporary bracing to maintain lines and levels until permanent supporting members are in place.
    b. Prepare subgrade by compacting points of contact and offset of six (6) inches to 95% compaction.
    c. Handling: Handle and temporarily support heavy timber framing to prevent surface damage, compression, and other effects that might interfere with indicated finish.
    d. Cutting: Avoid extra cutting after fabrication. Where field cutting is unavoidable, comply with requirements for shop fabrication in specification Section PK-ESCR 912 Nature Exploration Fabrication.
    e. Installation: Install Nature Exploration elements as indicated in Contract Drawings.
        i. Unless otherwise indicated, all steel supports and attachments to be hidden. Install steel supports and attachments with the same orientation with each connection.
    f. Adjusting: Repair damaged surfaces and finishes after completing erection. Replaced damaged Nature Exploration Elements if repairs are not approved by Engineer.

PK-ESCR 913.6. MEASUREMENT

The quantity of **LOG SCRAMBLE, TREE ROUND BORDER, TREE ROUND MAZE,** and **TREE ROUND SEAT** to be paid for shall be on the **LUMP SUM** basis for work satisfactorily completed and installed all in accordance with the plans, specifications, and directions of the Engineer.

PK-ESCR 913.7. PRICES TO COVER

The price bid shall be a unit price per **LUMP SUM** of **LOG SCRAMBLE** for all element assemblies installed and shall include the cost of all labor, materials, equipment, and incidental expenses necessary to complete the work, including site preparation, submittals, mock-ups, steel supports and attachments, chain of custody, handling, protection, field measurements, and installation, as inspected and approved by the Engineer; all in accordance with the plans, specifications, and directions of the Engineer.

The price bid shall be a unit price per **LUMP SUM** of **TREE ROUND BORDER** for all element assemblies installed and shall include the cost of all labor, materials, equipment, and incidental expenses necessary to complete the work, including site preparation, submittals, mock-ups, steel supports and attachments, chain of custody, handling, protection, field measurements, and installation, as inspected and approved by the Engineer; all in accordance with the plans, specifications, and directions of the Engineer.

The price bid shall be a unit price per **LUMP SUM** of **TREE ROUND MAZE** for all element assemblies installed and shall include the cost of all labor, materials, equipment, and incidental expenses necessary to complete the work, including site preparation, submittals, mock-ups, steel supports and attachments, chain of custody, handling, protection, field measurements, and installation, as inspected and approved by the Engineer; all in accordance with the plans, specifications, and directions of the Engineer.

The price bid shall be a unit price per **LUMP SUM** of **TREE ROUND SEAT** for all element assemblies installed and shall include the cost of all labor, materials, equipment, and incidental expenses necessary to complete the work, including site preparation, submittals, mock-ups, steel supports and attachments, chain of custody, handling, protection, field measurements, and installation, as inspected and approved by the Engineer; all in accordance with the plans, specifications, and directions of the Engineer.

Tree Salvage, Nature Exploration Fabrication, Shredded Bark Mulch, Planting Soil, and Horticultural Subsoil to be paid for under their respective item numbers.

Payment will be made under:

Item No.	Item	Pay Unit
PK-ESCR 913 A	LOG SCRAMBLE	LS
PK-ESCR 913 B	TREE ROUND BORDER	LS
PK-ESCR 913 C	TREE ROUND MAZE	LS
PK-ESCR 913 D	TREE ROUND SEAT LS	

END OF SECTION

SECTION PK-ESCR 929 – REMOVE, SALVAGE, PROTECT AND REINSTALL – GOUVERNEUR GARDENS ARTIFACTS

PK-ESCR 929.1. INTENT

This section describes work related to the removal, salvage, storage and relocation of items currently located in the Gouverneur Gardens garden at 605 Water Street in accordance with the plans, specifications and directions of the Engineer. □

PK-ESCR 929.2. DESCRIPTION

A. Work in this section is related to the removal, salvage, storage and relocation of items currently located in the west garden next to the Gouverneur Gardens Building 4, at the corner of South Street and Montgomery Streets in Lower East Side, New York. The term item includes paving, pavers, cobblestones and other artifacts as shown and described on the drawings. Included are:

1. Compost Bins
2. Cobblestones edges
3. Cobblestone pavers
4. Small boulders
5. Brick edges and pavers
6. Protect wall plaques and signage

B. Documentation of existing items.

1. The Contractor shall engage an experienced photographer to provide photographic documentation of each item on three occasions - prior to start of work, at the storage facility, and upon delivery of the items to the site (after storage).
2. Contractor shall prepare a written document (Gouverneur Gardens Item Relocation Report) describing in detail methods for dismantling, lifting, moving, and protecting all elements.

C. Protect, dismantle, and number each element and item.

1. After photographic documentation and careful evaluation of current condition, Contractor shall dismantle item for removal and storage.
2. The individual elements of each item are to be numbered. Contractor shall provide reproducible record drawings of each item documenting location of numbered elements.
3. Following dismantling and numbering, Contractor shall provide protective covering for all item. Protective covering shall remain in place during transportation, storage and through return of items to the site.

D. Transport and storage of items to storage facility.

1. Contractor shall transport all protected items to approved facility. Prior to moving the items, the Contractor shall inspect the facility with the Engineer to ensure that items are placed to the Owner’s satisfaction.

E. Transport of Items from storage facility to Gouverneur Gardens garden site.

1. Contractor shall transport all protected items from their place of storage to specified locations in the Gouverneur Gardens garden, New York. Prior to transport, Contractor shall provide a schedule of delivery dates for approval by Engineer, in consultation with a Gouverneur Gardens representative.

PK-ESCR 929.3. MATERIALS

A. PROTECTIVE COVERINGS

1. The contractor is responsible for designing, customizing, and constructing protective coverings for each numbered element of a item. Materials may include, but are not limited to wooden crates and padded or insulated materials. Types of materials used shall not have any adverse impact on item materials (e.g., moisture damage).

PK-ESCR 929.3.1. REFERENCESIs this

A. For granite, comply with recommendations of the National Building Granite Quarries Association Inc. (NBGQA).

B. For unit masonry, comply with standards established by the American Society of Testing and Materials (ASTM).

C. For bronze work, comply with standards established by the American National Standards Institute (ANSI).

PK-ESCR 929.3.2. SUBMITTALS

A. Schedule of work: For the record, submit proposed schedule for on-site work and for transport of items to off-site facility. Prior to return of items to the site, provide schedule of delivery dates to the Engineer for approval.

B. Item Relocation Report: Contractor shall prepare a written document describing, in detail, methods for dismantling, lifting, moving, and protecting all elements of each item. No work described in this report shall commence until this document has been reviewed and approved by the Engineer.

C. Record photographs: The Contractor shall engage a photographer to provide photographic documentation of each item on three occasions - prior to start of work, at the storage facility, and upon delivery of the items to the site (after storage).

1. All photographs shall be 7.2 megapixel minimum file size. Prints shall be labeled in sequence with a permanent identification number inscribed thereon.

2. In addition to the proper identification numbers, prints shall be further identified (on the back of the print) by appropriate permanent markings, such as labels using archival quality adhesive, consisting of the following information:

a. Contractor name

b. Photographer name

c. Name of Engineer, c/o DDC PM/CM

d. Contract number

e. Name of Gouverneur Gardens representative

f. Photo number

g. Date

h. Description of specific view indicating location (e.g., west face of item prior to relocation)

D. The photographs taken shall be of good quality, clarity and be sufficient to accurately record the conditions and overall appearance of each item at each of the three phases of work described above. Each face or component of an item shall be photographed.

E. Contractor shall deliver an electronic copy of images on a thumb drive along with all other materials to the Engineer.

F. For the record, provide written documentation of any and all deficiencies or damage that may exist at items prior to start of work. If such conditions exist, they must be clearly represented in the record photographs.

G. Record drawings: Prepare record drawing(s) which document numbered elements comprising each item. The purpose of these drawings is to enable reconstruction of items. Drawings(s) shall list and quantify all means and methods of construction observed at time of dismantling including but not limited to all means of connection (joints, dowels, etc.) and type and color of grout, sealant and other materials associated with items construction. Record drawings shall also indicate remaining existing features related to individual items (such as unit pavers, masonry units, benches, and plaques), their dimensional relationships to each other and to existing grades.

PK-ESCR 929.3.3. QUALITY CONTROL

A. Contractor qualifications: Contractor shall present evidence of 5 years prior experience in the installation and removal of large scale artifacts. Contractor is required to have relevant experience in stone masonry work and/or conservation. Contractor shall provide a list of similar projects and references. Contractor's qualifications will be subject to review by the Engineer.

PK-ESCR 929.3.4. DELIVERY, STORAGE, AND HANDLING

A. Items shall be delivered in undamaged condition.

B. Store and handle items to prevent deterioration or damage due to moisture, temperature changes, contaminants, corrosion, breaking, chipping, or other causes. Engineer shall approve the use of any type of cleaner prior to use.

PK-ESCR 929.3.5. WARRANTY

A. Contractor is fully responsible for condition of, and protection of items throughout project including, but not limited to, damage, vandalism and theft.

B. Contractor shall have in place, at the time of work, an insurance policy which specifically identifies coverage for works of art against damage, theft and vandalism in the amount of $ 25,000.00.

PK-ESCR 929.4. METHODS

A. SITE CONDITIONS

1. Contractor shall protect all site elements to remain as indicated on the drawings including, but not limited to, trees and soil areas.
2. Contractor is not required to protect foundations of items, unless such elements are indicated to remain as part of the item on the drawings.

B. EXAMINATION

1. Contractor shall examine site conditions with Engineer and Gouverneur Gardens representative present. For the record, provide photographic documentation and written description of any and all deficiencies or damage which may exist at items prior to start of work.
2. It shall be the Contractor's responsibility to document any condition which may affect the ability to reinstall items in their condition as documented at the start of work.

C. DISMANTLING AND REMOVAL OF ITEMS

1. Contractor shall dismantle all items specified in subsection 2.A above in accordance with highest industry standards. No element of the item may be cut or reduced in size. Separation of item from foundation shall be accomplished with great care and consideration of material(s). Saw cutting of foundations is permissible. Procedures for numbering dismantled units and lifting shall be as stated in the approved Item Relocation Report.
2. Each element of the item shall be numbered with non-permanent markings according to the approved procedures.

D. PROTECTION OF ITEMS

1. Contractor shall construct protective covering for each element of an item. Numbering system shall be shown on the outside of protective coverings as well as on individual pieces. Covering shall ensure that no damage occurs during transport, handling, storage and return transport to site.

E. TRANSPORT AND STORAGE OF ITEMS

1. Contractor shall transport items by means required to ensure safety of item giving consideration to weight, height, freeze-thaw resistance of materials, and temperature. Items shall be placed on elevated wood pallets in storage facility as directed by Engineer.

F. RETURN TRANSPORT OF ITEMS

1. Upon written approval of transport schedule, Contractor shall return items to site for re-installation under separate contract. Contractor shall remove and dispose of all protective coverings. Engineer will perform assessment of item condition prior to reinstallation.

PK-ESCR 929.5. MEASUREMENT

Measurement of REMOVE, SALVAGE, PROTECT AND REINSTALL – GOUVERNEUR GARDENS in accordance with the plans, relocation report, submitted documentation,

specifications, and directions of the engineer, the Contractor shall receive the LUMP SUM price bid.

PK-ESCR 929.6. PRICES TO COVER

The price bid shall be for a LUMP SUM for all removal, salvage, protection and reinstallation of Gouverneur Gardens Artifacts and shall include the cost of all labor, materials, equipment, and incidentals necessary to complete the work, including schedule of work, documentation of items, relocation report, record photography, record drawings, dismantling, transport, protection, storage, return and re-installation of items.

Payment will be made under:

Item No.	Item	Pay Unit
PK-ESCR 929	REMOVE, SALVAGE, PROTECT AND REINSTALL GOUVERNEUR GARDENS	L.S.

END OF SECTION

SECTION PK-ESCR 930 – REMOVE, SALVAGE, STORE AND REINSTALL – PARK ARTIFACTS EAST RIVER PARK

PK-ESCR 930.1. INTENT

This section describes work related to the removal, salvage, and storage of items currently located in the East River Park in accordance with the plans, specifications and directions of the Engineer.

PK-ESCR 930.2. DESCRIPTION

A. Work in this section is related to the removal, salvage, storage and relocation of sculpture currently located in the East River Park. Included are:

East River Park Sculptures

1. Seal sculptures at Lower Side Water Park
2. Bronze crabs and turtle sculptures at the Lower Side Water Park

B. Documentation of existing conditions of artifact or sculptures.

1. The Contractor shall engage an experienced photographer to provide photographic documentation of each sculpture on three occasions - prior to start of work, at the storage facility, and upon delivery of the sculptures to the location approved by NYCDPR and the Engineer.

1. Contractor shall prepare a written document (Site Items Relocation Report) describing in detail methods for dismantling, lifting, moving, and protecting all elements. Report to include and categorize three sets of articles:

   i. Seals to be removed, salvaged, and protected and delivered to approved facility to be used for molds by the Pier 42 project. This includes full body, head, upper-half body, lower half-body, tail flipper, and pup sculptures.

   ii. Bronze crabs to be removed, salvaged, and protected and delivered to approved facility to be re-installed by the Pier 42 project.

   iii. Bronze turtles to be removed, salvaged, and protected and delivered to approved facility to be re-installed by the Pier 42 project.

C. Protect, dismantle, and number sculptures.

1. After photographic documentation and careful evaluation of current condition, Contractor shall dismantle sculptures for removal and storage.

2. The individual elements of each sculpture are to be numbered. Contractor shall provide reproducible record drawings of each sculpture documenting location of numbered elements.

3. Following dismantling and numbering, Contractor shall provide protective covering for all sculptures. Protective covering shall remain in place during transportation, storage and through return of sculptures to the site.

D. Transport and storage of sculptures to storage facility.

1. Contractor shall transport all protected sculptures to approved facility or to a NYCDPR facility as directed by the Engineer. Prior to moving the sculptures, the Contractor shall inspect the facility with the Engineer to ensure that sculptures are placed to the Engineer's satisfaction.

PK-ESCR 930.3. MATERIALS

A. PROTECTIVE COVERINGS

1. The contractor is responsible for designing, customizing, and constructing protective coverings for each numbered element of a sculpture. Materials may include, but are not limited to wooden crates and padded or insulated materials. Types of materials used shall not have any adverse impact on sculpture materials (e.g., moisture damage).

PK-ESCR 930.3.1. REFERENCES

A. For granite, comply with recommendations of the National Building Granite Quarries Association Inc. (NBGQA).

B. For unit masonry, comply with standards established by the American Society of Testing and Materials (ASTM).

C. For bronze work, comply with standards established by the American National Standards Institute (ANSI).

PK-ESCR 930.3.2. SUBMITTALS

A. Schedule of work: For the record, submit proposed schedule for on-site work and for transport of sculptures to off-site facility. Prior to return of sculptures to the site, provide schedule of delivery dates to the Engineer for approval.

B. SCULPTURE Relocation Report: Contractor shall prepare a written document describing, in detail, methods for dismantling, lifting, moving, and protecting all elements of each sculpture. No work described in this report shall commence until this document has been reviewed and approved by the Engineer.

C. Record photographs: The Contractor shall engage an photographer to provide photographic documentation of each sculpture on three occasions - prior to start of work, at the storage facility, and upon delivery of the sculptures to the approved facility (after storage).

1. All photographs must be 7.2 megapixel file size or greater and at least 2,400 pixels by 3,000 pixels. Prints shall be labeled in sequence with a permanent identification number inscribed thereon.

2. In addition to the proper identification numbers, prints shall be further identified (on the back of the print) by appropriate permanent markings, such as labels using archival quality adhesive, consisting of the following information:

i. Contractor name
ii. Photographer name
iii. Name of Engineer, c/o DDC PM/CM
iv. Name of NYCDPR Representative
v. Contract number
vi. Name of sculpture
vii. Photo number
viii. Date
ix. Description of specific view indicating location (e.g., west face of sculpture prior to relocation)

D. The photographs taken shall be of good quality, clarity and be sufficient to accurately record the conditions and overall appearance of each sculpture at each of the three phases of work described above. Each face or component of a sculpture shall be photographed.

E. Contractor shall deliver an electronic copy of images on a thumb drive along with all other materials to the Engineer.

F. For the record, provide written documentation of any and all deficiencies or damage that may exist at sculptures prior to start of work. If such conditions exist, they must be clearly represented in the record photographs.

G. Record drawings: Prepare record drawing(s) which document numbered elements comprising each sculpture. The purpose of these drawings is to enable reconstruction of sculptures under a separate contract. Drawings(s) shall list and quantify all means and methods of construction observed at time of dismantling including but not limited to all means of connection (joints, dowels, etc.) and type and color of grout, sealant and other materials associated with sculptures construction.

PK-ESCR 930.3.3. QUALITY CONTROL

A. Contractor qualifications: Contractor shall present evidence of 5 years prior experience in the installation and removal of sculptures and/or large scale works of art. Contractor is required to have relevant experience in sculpture conservation. Contractor shall provide a list of similar projects and references. Contractor's qualifications will be subject to review by the Engineer.

PK-ESCR 930.3.4. DELIVERY, STORAGE, AND HANDLING

A. Sculptures shall be delivered in undamaged condition.

B. Store and handle sculptures to prevent deterioration or damage due to moisture, temperature changes, contaminants, corrosion, breaking, chipping, or other causes. Engineer shall approve the use of any type of cleaner prior to use.

PK-ESCR 930.3.5. WARRANTY

A. Contractor is fully responsible for condition of, and protection of sculptures throughout project including, but not limited to, damage, vandalism and theft.

B. Contractor shall have in place, at the time of work, an insurance policy which specifically identifies coverage for works of art against damage, theft and vandalism in the amount of $ 250,000.00.

PK-ESCR 930 .4. METHODS

A. SITE CONDITIONS

1. Contractor shall protect all site elements to remain as indicated on the drawings including, but not limited to, trees and soil areas.
2. Contractor is not required to protect foundations of sculptures, unless such elements are indicated to remain as part of the sculpture on the drawings.

B. EXAMINATION

1. Contractor shall examine site conditions with Engineer and NYCDPR Representative present. For the record, provide photographic documentation and written description of any and all deficiencies or damage which may exist on sculptures prior to start of work.

   NYCDPR Contact: Manhattan Forestry – 212-860-1845
2. It shall be the Contractor's responsibility to document any condition which may affect the ability to reinstall sculptures in their condition as documented at the start of work.

C. DISMANTLING AND REMOVAL OF SCULPTURES

1. Contractor shall dismantle sculptures in accordance with highest industry standards. No element of the SCULPTURE may be cut or reduced in size. Separation of sculpture from foundation shall be accomplished with great care and consideration of material(s). Saw cutting of foundations is permissible. Procedures for numbering dismantled units and lifting shall be as stated in the approved SCULPTURE Relocation Report.
2. Each element of the SCULPTURE shall be numbered with non-permanent markings according to the approved procedures.

D. PROTECTION OF SCULPTURES

1. Contractor shall construct protective covering for each element of a SCULPTURE. Numbering system shall be shown on the outside of protective coverings as well as on individual pieces. Covering shall ensure that no damage occurs during transport, handling, storage and return transport to site.

E. TRANSPORT AND STORAGE OF SCULPTURES

1. Contractor shall transport sculptures by means required to ensure safety of SCULPTURE giving consideration to weight, height, freeze-thaw resistance of materials, and temperature. sculptures shall be placed on elevated wood pallets in storage facility as directed by Engineer. Upon written approval of transport schedule, Contractor must turn over sculptures to NYCDPR as directed by the Engineer.
   i. NYCDPR Contact: Manhattan Forestry 212-860-1845.

PK-ESCR 930 .5. MEASUREMENT

Measurement of **REMOVE, SALVAGE, STORE AND REINSTALL – EAST RIVER PARK** in accordance with the plans, relocation report, submitted documentation, specifications, and directions of the engineer, the Contractor shall receive the **LUMP SUM** price bid.

PK-ESCR 930 .6. PRICES TO COVER

The price bid shall be for a **LUMP SUM** for all removal, salvage, protection and reinstallation of East River Park Artifacts and shall include the cost of all labor, materials, equipment, and incidentals necessary to complete the work, including schedule of work, documentation of Sculptures, relocation report, record photography, record drawings, dismantling, transport, protection, storage, return and delivery of Sculptures.

Payment will be made under:

Item No.	Item	Pay Unit
PK-ESCR 930	**Remove, Salvage, Store and Reinstall – East River Park**	**L.S.**

END OF SECTION

SECTION PK-ESCR 937 – HORTICULTURAL SOILS SOURCING AND SUPPLY

PK-ESCR 937.1. DESCRIPTION. This section describes the sourcing, mixing, testing, stockpiling, furnishing, and installation of HORTICULTURAL DRAINAGE LAYER, HORTICULTURAL SUBSOIL, PLANTING SOIL FOR BEDS & PITS, and **PLANTING SOIL FOR SEEDED & SODDED LAWN AREAS** in accordance with the plans, specifications and directions of the Engineer.

PK-ESCR 937.2. MATERIALS.

A. General: Horticultural Soils are made up of a mix of three soil component materials: Sand, loam, and Compost as specified herein. The quality of the horticultural soil mixes depends on the quality of the original soil component materials. Soil component specifications and component ratios are provided for bidding purposes only. They require confirmation and adjustment by the Contractors' Soil Testing Laboratory, depending on availability of component materials, and with the approval of the Engineer, in order to meet Specification requirements. The Contractor is responsible for the time and cost associated with locating, testing and obtaining approval by the Engineer of sand, loam and compost materials as well as the final component soil mixes that meet the Specification requirements, regardless of the time for, or number of tests required to meet the requirements of this Specification.

B. Environmental Requirements: Prior to delivery to the site, soil component materials and soil mixes must be sampled and analyzed by a New York State Department of Health (NYSDOH) Environmental Laboratory Approval Program (ELAP) - certified laboratory in accordance with the New York State Department of Environmental Conservation (NYSDEC) DER-10 protocols for the full list of parameters in Title 6 of the Official Compilation of the New York Codes, Rules and Regulations (NYCRR) Part 375-6.8; see analytical methods in the "Appeal Process" **DELIVERY, STORAGE, AND HANDLING.**

    a. Results of the analytical testing must meet 6 NYCRR Part 375 Restricted Use – Restricted Residential (RURR) Soil Cleanup Objectives (SCOs). The soil component materials and soil mixes must not have any physical evidence of contamination, including but not limited to petroleum or unnatural/toxic odors, visual signs of staining, or elevated photoionization detector (PID) readings.

C. Soil Component Materials:

    a. SAND: A USDA Texture of coarse sand, naturally occurring siliciclastic material, consisting of clean, inert, rounded to sub-angular grains of quartz or other durable rock free from loam or clay, surface coatings and deleterious materials. Limestone-based or carbonate-based sands are not acceptable for use on the project. Sand manufactured from crushed or processed rock is not acceptable for use on the project. Meet the following criteria as confirmed by laboratory testing:

        i. pH: 6.5 - 7.3.
        ii. Salinity: Electrical conductivity of a 1:2 soil to water extract, ≤ 1.50 mmos/cm (dS/m).
        iii. Saturated hydraulic conductivity of the sand: ≥ 8 inches per hour, according to ASTM D5856, when compacted to a minimum of 90% Standard Proctor, ASTM 698.
        iv. Organic Matter: < 0.25% with no visible organic material present in this material.

v. Particle size distribution shall be:

Particle Size Class	Passing Sieve No.	Range in % Passing (ASTM F 1632)
Fine Gravel	10	95 - 100
Very Coarse Sand	18	90 - 95
Coarse Sand	35	60 - 80
Medium Sand	60	10 - 40
Fine Sand	140	8 - 15
Very Fine Sand	270	1 - 10
		Determined by hydrometer method (ASTM F 1632)
Silt		1 - 6
Clay		0 - 4

b. LOAM: A USDA Texture of Sandy Loam, Sandy clay Loam or Loam, naturally occurring soil with a developed stable crumb structure formed from geologic soil forming processes without admixtures of sand or organic matter sources (composts). Loam shall be free of subsoil, stones over one inch in diameter, earth clods, sticks, stumps, clay lumps, roots or other objectionable, extraneous matter or debris. Loam shall also be free of quack-grass rhizomes, Agropyron repens, and the nut-like tubers of nutgrass, Cyperus esculentus, and all other primary noxious weeds. Meet the following criteria as confirmed by laboratory testing:

i. Organic Content: between 3.0 and 8.0 percent on a dry weight basis.
ii. pH: ≤ 7.2 and shall be conducive to achieving pH requirements for soil blends specified herein.
iii. Salinity: Electrical conductivity of a one to two soil to water extract, ≤ 1.50 mmos/cm (dS/m).
iv. Allowable USDA Sandy Loam Texture
    1. Sand: >52% sand
    2. Silt + 2x Clay Content ≥ 30%
    3. Clay: 7-20%
v. Allowable USDA Sandy Clay Loam Texture
    1. Sand: >45%
    2. Silt: <28%
    3. Clay: 20-35%
vi. Allowable Loam Texture
    1. Sand: <52% Sand
    2. Silt: 28-52%
    3. Clay: 7-28%

D. Compost: A stable, humus-like material produced from the aerobic decomposition of organic residues which shall have been composted for a minimum of one year (12 months). The use of biosolids as feedstock for compost production is prohibited. Compost

shall be a dark brown to black color and be capable of supporting plant growth with appropriate management applicable, with no visible free water or dust, with no rank or unpleasant odor, and meeting the following criteria as confirmed by laboratory tests:

Criteria	Test Method	Acceptable Range
Feed stock		Brewer's waste, or leaf mulches are acceptable. Composted municipal waste (chipped, shredded and screened wood, leaves, bark, etc.) alone is not acceptable unless it meets all of the criteria noted
Carbon/Nitrogen Ratio		10:1 - 25:1
Degree of Maturity	Dewer Self Heating or	VI-V
	Solvita Maturity Index or	6-8
	CO^2 Evolution	1.2%C/day
Texture	Dry Sieve and Hydrometer	Screened to 1/2 inch maximum particle size, and not more that 3 percent material finer than 0.002mm as determined by hydrometer test on ashed material.
Foreign Material	Dry Weight	Debris such as metal, glass, plastic, wood (other than residual chips), asphalt or masonry shall not be visible and shall not exceed 1% dry weight.
Organic Matter %	Dry Weight	≥25 percent
pH	1:1 soil-distilled water suspension using a glass electrode pH meter American Society of Agronomy Methods of Soil Analysis, Part 2, 1986.	6.5 to 7.3
Ammonium	Extract	<200 PPM
Salinity	1:5 soil to water ratio extract	2.0 mmhos/cm (dS/m).
Nutrient Content	Extract	Total Nitrogen, Ammonium Nitrogen, Phosphorus, Potassium, Calcium, Magnesium, Sulfur, Calcium, Magnesium, Sodium, Iron, Aluminum, Manganese, Copper, Zinc.
Pathogens/Metals/ Vector Attraction	Extract	Meet all Federal and State of New York requirements for applications to soils with human activity.
Biological Organisms	Soil FoodWeb Analysis	Organism Biomass Data: Dry weight: 0.20 to 0.80 Active Fungi: > 3.00 µg/g Total Fungi: >300.00 µg/g Hyphal Diameter: > 2.50 µg/m Active Bacteria: > 3.00 µg/g Total Bacteria: > 300.00 µg/g Organism Biomass Ratios: AF:TB 0.01 to 10 AF:TF < 0.10 AB:TB < 0.10 AF:AB 0.01 to 10 Protozoa (Protists): # Flagellates: >10,000/g Nematodes: # Nematodes: >10.00/g

E. Soil Mixes:

a. General: Create soil mixes by blending sand, loam and compost component materials to achieve specification requirements. The Contractor is responsible for the time and cost associated with mixing the components, testing the mixes to meet the requirements of the final mix designs, and obtaining approval by the Engineer regardless of the time for, number of test mixes, or tests required to meet the requirements of this Specification. Approximate mixing ratios are provided for bidding purposes, will require adjustment by the Contractors' Soil Testing Laboratory, depending on the final component soil materials, and with the approval of the Engineer, in order to meet Specification requirements.

b. Horticultural Drainage Layer: Comply with requirements for sand as specified herein.

c. Horticultural Subsoil: Combine sand and Loam to create a uniform blend. Approximate mix ratios, based on the approved loam USDAS classification, are 3 : 1 Sand : Sandy Loam, 4 : 1 Sand : Loam or 5 : 1 Sand : Sandy Clay Loam. Adjust the blended soil mix to meet the following requirements:

i. Comply with environmental requirements of Environmental Remediation Programs, 6 NYCRR Part 375.

ii. pH: 6.5 - 7.3.

iii. Salinity: Electrical conductivity of a 1:2 soil to water extract, ≤ 1.50 mmos/cm (dS/m).

iv. Saturated hydraulic conductivity of the sand: ≥ 4 inches per hour, according to ASTM D5856, when compacted to a minimum of 90% Standard Proctor, ASTM 698.

v. Organic Matter (ASTM F 1647): 2-3%.

vi. Compaction (as measured by Penetrometer): Uniformly increasing with depth, penetration < 220 PSI (lbs./in$^{2)}$ after installation.

vii. No stones or coarse fragments over 1" in size.

viii. Particle size distribution shall be:

Particle Size Class	Passing Sieve No.	Range in % Passing (ASTM F 1632)
Fine Gravel	10	95 - 100
Very Coarse Sand	18	80 - 95
Coarse Sand	35	65 - 85
Medium Sand	60	30 - 40
Fine Sand	140	15- 25
Very Fine Sand	270	9 - 18
		Determined by hydrometer method (ASTM F 1632)
Silt		6 - 12
Clay		3 - 6

d. Planting Soil for Beds & Pits: Combine horticultural Subsoil and Compost to create a uniform blend. Approximate mix ratios which meets the following requirements are 3.5 : 1 Horticultural Subsoil : Compost. Adjust the blended soil mix to meet the following requirements:

i. Comply with environmental requirements of Environmental Remediation Programs, 6 NYCRR Part 375.

ii. pH: 6.5 - 7.3.

iii. Salinity: Electrical conductivity of a 1:2 soil to water extract, ≤ 1.50 mmos/cm (dS/m).

iv. Saturated hydraulic conductivity of the sand: ≥ 2 inches per hour, according to ASTM D5856, when compacted to a minimum of 90% Standard Proctor, ASTM 698.

v. Organic Matter ASTM F 1647): 6-8%.

vi. Compaction (as measured by Penetrometer): Uniformly increasing with depth, penetration < 140 PSI (lbs./$in^{2)}$ after installation.

vii. No stones or coarse fragments over 1" in size.

viii. Particle size distribution shall be:

Particle Size Class	Passing Sieve No.	Range in % Passing (ASTM F 1632)
Fine Gravel	10	95 - 100
Very Coarse Sand	18	90 - 95
Coarse Sand	35	65 - 85
Medium Sand	60	30 - 40
Fine Sand	140	15- 25
Very Fine Sand	270	9 - 18
		Determined by hydrometer method (ASTM F 1632)
Silt		6 - 12
Clay		3 - 6
Phosphorous (P)	Extract	20-100 PPM
Potassium (K)	Extract	200-600 PPM
Cation Exchange (CEC)	Extract	>8 Meq/100g

e. Planting Soil for Seeded and Sodded Lawns: Combine Horticultural Subsoil and Compost to create a uniform blend. Approximate mix ratios which meets the following requirements are 4 : 1 Horticultural Subsoil : Compost. Adjust the blended soil mix shall to meet the following requirements:

i. Comply with environmental requirements of Environmental Remediation Programs, 6 NYCRR Part 375.

ii. pH: 6.5 - 7.3.

iii. Salinity: Electrical conductivity of a 1:2 soil to water extract, ≤ 1.50 mmos/cm (dS/m).

iv. Saturated hydraulic conductivity of the sand: ≥ 2 inches per hour, according to ASTM D5856, when compacted to a minimum of 90% Standard Proctor, ASTM 698.

v. Organic Matter (ASTM F 1647): 3-5%.

vi. Compaction (as measured by Penetrometer): Uniformly increasing with depth, penetration < 140 PSI (lbs./in$^{2)}$ after installation.

vii. No stones or coarse fragments over 1" in size.

viii. Particle size distribution shall be:

Particle Size Class	Passing Sieve No.	Range in % Passing (ASTM F 1632)
Fine Gravel	10	95 - 100
Very Coarse Sand	18	90 - 95
Coarse Sand	35	65 - 85
Medium Sand	60	30 - 40
Fine Sand	140	15- 25
Very Fine Sand	270	9 - 18
		Determined by hydrometer method (ASTM F 1632)
Silt		6 - 12
Clay		3 - 6
Phosphorous (P)	Extract	20-100 PPM
Potassium (K)	Extract	200-600 PPM
Cation Exchange (CEC)	Extract	>8 Meq/100g

F. Soil Amendment Materials:

a. Fertilizer: Commercial-grade complete fertilizer of neutral character, consisting of fast- and slow-release nitrogen, 50 percent derived from natural organic sources of urea formaldehyde, phosphorous, and potassium in amounts recommended to eliminate deficiencies of proposed planting soil mixes as indicated in test reports from the approved testing laboratory.

b. Lime: ASTM C 602, agricultural limestone containing a minimum 80 percent calcium carbonate equivalent and as follows:

i. Class: Class O, with a minimum 95 percent passing through No. 8 (2.36-mm) sieve and a minimum 55 percent passing through No. 60 (0.25-mm) sieve.

c. Sulfur: Granular, biodegradable, containing a minimum of 90 percent sulfur, with a minimum 99 percent passing through No. 6 (3.35-mm) sieve and a maximum 10 percent passing through No. 40 (0.425-mm) sieve.

d. Iron Sulfate: Granulated ferrous sulfate containing a minimum of 20 percent iron and 10 percent sulfur.

e. Aluminum Sulfate: Commercial grade, unadulterated.

G. Penetrometer:

a. Complete penetrometer testing with a penetrometer that complies with American Society of Agricultural Engineers (ASAE), S313.3 1999 (R 2018) Soil Cone Penetrometer standard. Subject to meeting this requirement, the following are acceptable penetrometer manufacturers:

i. Dickey-John Soil Compaction Tester, Dickey-John, Auburn, IL 62615, (217) 438-3371.

ii. Agratronix Soil Compaction Tester, Model 08180, Agratronix, Streetsboro, Ohio 44241, (800) 821-9542

iii. Turf-Tec, Model PN-Compi-S. Turf-Tec International, Tallahassee, FL 32303, 850-580-4026

iv. Agriculture Solutions Penetrometer, Agriculture Solutions, LLC, Strong ME,04983, (888) 683-8291

H. Chinking Stone: All stone shall consist of naturally occurring dense, sound material of uniform color and shall be of such character that it will resist disintegration and erosion by the action of air; water; wetting and drying; freezing and thawing; and any other natural or climatic factors.

a. It shall be free from soil, peat or any other organic matter.
b. It shall be capable of being handled and placed without fracture or damage, and shall conform to standards and gradation requirements detailed in the following sections.
c. Chinking stone to meet the following sieve analysis:

SIEVE SIZE	PERCENT PASSING
1 IN	95 - 100
3/8 IN	20 - 85
No.10	0 - 10
No.200	0 - 3

I. Underdrain: Underdrain shall comply with the requirements of item no. PK-ESCR 189.

J. Geotextile - Separation: Geotextile shall comply with the requirements of item no. PK-ESCR 149 Geotextiles-Separation.

PK-ESCR 937.2.1. REFERENCES.

A. American Society for Testing and Materials (ASTM) Standards, Methods:

1. ASTM C 136-01: “Standard Test Method for Sieve Analysis of Fine and Course Aggregates” (Dry Sieving).
2. ASTM D 422-63 (2002): “Standard Test Method for Particle-Size Analysis of Soils” (Hydrometer).
3. ASTM D 698: “Standard Test Methods For Laboratory Compaction Characteristics of Soil Using Standard Effort” (Standard Proctor).
4. ASTM D 1556 Standard Test Method for Density and Unit Weight of Soil in Place by Sand-Cone Method
5. ASTM D 3385 - 09 Standard Test Method for Infiltration Rate of Soils in Field Using Double-Ring Infiltrometer.

6. ASTM D 4972-01: “Standard Test Method For pH of Soils” using distilled water.
7. ASTM D 5856-15: “Standard Test Method for Measurement of Hydraulic Conductivity of Porous Material Using a Rigid-Wall, Compaction-Mold Permeameter.
8. ASTM D6938 - 08a “Standard Test Method for In-Place Density and Water Content of Soil and Soil-Aggregate by Nuclear Methods (Shallow Depth)”
9. ASTM F 1647-02a: “Standard Test Method For Organic Matter Content of Putting Green and Sports Turf Zone Mixes.

B. Soil Moisture Content shall be performed using Speedy Moisture Tester, Model 2000D.

C. Woods End Research Laboratory, Mt. Vernon, Maine: Solvita Manual, Version 4.

D. Recommended Soil Testing Procedures for the Northeastern United States, 3rd Edition, Northeastern Regional Publication No. 493, Agricultural Experiment Stations of Connecticut, Delaware, Maine, Maryland, Massachusetts, New Hampshire, New Jersey, New York, Pennsylvania, Rhode Island, Vermont and West Virginia, Revised, July 1, 2011 (NRP 493). Referenced document may be obtained on the web at: http://extension.udel.edu/lawngarden/soil-health-composting/recommended-soil-testing-procedures-for-the-northeastern-united-states/

Tests include the following:

1. Test for soil Organic Matter by loss of weight on ignition, as described in NRP 493, pp. 63-74.
2. Test for soil CEC by exchangeable acidity method as described in NRP 493, pp. 75-86.
3. Test for soil Soluble Salts shall be by the 1:2 (v:v) Soil:Water Extract Method as described in NRP 493, pp.87-94.
4. Test for Buffer pH by the SMP method as described in NRP No. 493, pp. 19-25.

E. New York State Department of Environmental Conservation, Division of Solid and Hazardous Waste Materials:

1. Recycling of Organic Waste Through Composting, Land Application, and Other Means, 6 NYCRR Subparts 360-1 through 360-5.
2. Environmental Remediation Programs, 6 NYCRR Part 375

F. Code of Federal Regulations Title 40, Chapter I-Environmental Protection Agency:

1. 40 CFR Part 261 - Identification And Listing Of Hazardous Waste
2. 40 CFR Part 503 rule, Table 3, page 9392, Vol. 58 No. 32.

G. American Society of Agronomy

H. American Society of Agricultural Engineers (ASAE), S313.3 1999 (R 2018) Soil Cone Penetrometer standard.

I. U.S. Compost Council, Test Methods for the Examination of Composting and Composts.

PK-ESCR 937.2.2. SUBMITTALS.

A. Product Data: For each type of product indicated.

a. Submit most recent printed information from manufacturer.
    i. Sand: identify the source area and prior land use.
    ii. Loam: identify the source area and prior land use.
    iii. Compost: identify the material(s) from of which is it composed and identify the location where material was composted.
    iv. Soil Amendments:
        1. Ground Limestone:
        2. Agricultural limestone:
        3. Agricultural Elemental Sulfur:
        4. Agricultural Aluminum Sulfate
b. Data for the sand, loam and compost shall be no older than 30 days from date of the submittal submission.
c. Data for the Penetrometer to be used for in-place soil compaction testing.
d. Horticultural Soil Installation Equipment Specification Data showing low-ground pressure compliance of installation equipment.

B. Qualification Data:
a. Soil material supplier, including:
    i. Provide soil material supplier number of years of experience, list of previous projects including project name, a contact name, phone number, and the number of cubic yards per each installation and a brief description of the project.
    ii. Location where the planting soil mixes and component materials will be mixed and stockpiled including available soil mixing and stockpiling area.
b. Submit qualifications of Soil Testing Laboratory to be utilized for soil testing, including the resume of the staff anticipated to perform the required work of the project.
c. Submit qualifications of Field Quality Control Testing Laboratory and laboratory staff to be utilized for in-place soil compaction testing, including the resume of the staff anticipated to perform the required work of the project.

C. Material Test Reports:
a. General: Submit written reports of each sample tested. Include with each test report the following as a minimum and such other information required specific to material tested:
    i. Date issued.
    ii. Project Title, names of Contractor and supplier.
    iii. Testing laboratory name, address and telephone number, and name(s), as applicable, of each field and laboratory inspector.
    iv. Date, place, and time of sampling or test, with record of temperature and weather conditions.

v. Location of material source.

vi. Name and protocol of test performed.

1. Sand and Loam Test Reports: Results of tests including identification of deviations from specified ranges. Identify any toxic substance(s) harmful to plant growth or life. Recommendations for soil amendments, mix proportions, and methods of preparation, as applicable to specifications herein.

2. Compost Test Reports: Results of tests including identification of deviations from specified ranges. Identify any toxic substance(s) harmful to plant growth or life.

b. Provide resubmissions of material samples with a matching material test report.

c. Missing information, failure to use the specified testing protocol, or failure to supply a material sample as specified with the test report shall be grounds for rejection.

d. Complete lab test reports submitted for approval by the Engineer no more than four (4) weeks (28 days) from date of sample collection and submittal for approval.

e. Contractor is responsible for all costs associated with laboratory testing.

f. Component Material Test Reports: Submit test reports with each sample of sand, topsoil, and compost for approval. Resubmissions of test reports shall be accompanied by a matching material sample.

i. Provide the following testing for Sand:

1. Sieve and Hydrometer Analysis and Evaluation
2. pH
3. Saturated hydraulic conductivity
4. Salinity
5. Environmental Testing Compliance
6. Test Frequency: As required to receive approval from Engineer

ii. Provide the following testing for Loam:

1. Sieve and Hydrometer Analysis and Evaluation
2. pH
3. Buffer pH
4. Cation Exchange Capacity
5. Soluble Salts
6. Nutrient Content (Total Nitrogen, Ammonium Nitrogen, Phosphorus, Potassium, Calcium, Magnesium, Sulfur, Calcium, Magnesium, Sodium, Iron, Aluminum, Manganese, Copper, Zinc)
7. Organic Content
8. Saturated hydraulic conductivity
9. Salinity
10. Nutrient Content
11. Environmental Testing Compliance
12. Test Frequency: As required to receive approval from Engineer

iii. Provide the following Testing for Compost:

1. Feedstock
2. Carbon/Nitrogen Ration (C/N)
3. Degree of Maturity
4. Texture (Particle Size)
5. Organic Content (%)
6. pH
7. Buffer pH
8. Cation Exchange Capacity
9. Soluble Salts
10. Nutrient Content (Total Nitrogen, Ammonium Nitrogen, Phosphorus, Potassium, Calcium, Magnesium, Sulfur, Calcium, Magnesium, Sodium, Iron, Aluminum, Manganese, Copper, Zinc)
11. Moisture Content
12. Pathogens/Metals/Vector Attraction
13. Biological Organisms
14. Test Frequency: As required to receive approval from Engineer

g. Soil Mix Test Reports: Submit soil mix test reports with each sample of horticultural drainage material, horticultural subsoil, planting soil for bed & pits, and planting soil for seeded and sodded lawns for approval. Provide resubmissions of test reports with a matching material sample.

   i. Provide the following testing for each soil mix:

      1. Sieve and Hydrometer Analysis and Evaluation
      2. pH
      3. Organic Content
      4. Salinity
      5. Nutrient Content
      6. Environmental Testing Compliance
      7. Test Frequency: As required to receive approval from Engineer.

h. Off-Site Stockpile Environmental Test Reports:

   i. Provide the following Off-Site Stockpile Environmental testing:

      1. Environmental chemical analysis of all proposed horticultural soil mixes shall include USEPA Standard Test Methods for determination of total contaminant concentrations for the complete list of 6 NYCRR Part 375-6.8b parameters for Restricted Use Soil Cleanup Objectives - Residential category. Perform analysis of the horticultural soil mixes in accordance with USEPA Methods SW846; 8260 for Volatile Organics, 8270 for Semi-Volatile Organics, 8081 for Pesticides, and 8082 for Polychlorinated Biphenyls (PCBs), and 6010 for Metals.
      2. Demonstrate materials meet NYSDEC Part 375 RURR SCOs and do not exceed hazardous waste characteristic criteria (40 CFR Part 261).
      3. Provide a PDF of the lab report and an excel table comparing the fill material to the NYSDEC Part 375 RURR SCOs. Should the horticultural mixes possess hazardous or contaminated

characteristics, refer to the APPEAL PROCESS section below.

4. Test Frequency:
    a. Every 400 Cubic Yards for the first 5,000 yards of each soil mix produced.
    b. Every 1,000 Cubic Yards of each soil mix produced thereafter.

i. Off-Site Stockpile QA/QC Test Reports: Once the planting soil mixes are approved, the supplier may begin stockpiling soil mixes. Ensure consistency (QA/QC) of mixes in stock-piles by periodic testing. Provide stockpile tests as indicated or as additionally requested by the Engineer. Provide test reports with a matching soil mix sample. The Engineer reserves the right to reject, on or after delivery, any material which does not, in the Engineer's opinion, meet these specifications.

i. Provide the following testing for Off-Site Stockpile QA/QC Testing:

1. Sieve and Hydrometer Analysis and Evaluation
2. pH
3. Organic Content
4. Salinity
5. Test Frequency: One test per 2,000 cubic yards of each mix produced for off-site stockpiling.

j. In-Place Soil Compaction Test Reports: Scale plan showing test locations and results for each test at horticultural subsoil and planting soil installation. Indicate test results showing compliance at each testing location.

D. Samples:

a. Verification of Soil Components: Submit to the Engineer for distribution with complete soil testing results showing compliance with requirements:

i. Sand: Three (3) 1 quart samples in sealed labeled bags.

ii. Topsoil: Three (3) 1 quart samples in sealed labeled bags.

iii. Compost: Three (3) 1 quart samples in sealed labeled bags.

iv. Resubmissions of soil component samples shall be accompanied by a matching material test report.

b. Verification of Soil Mixes: Submit to the Engineer for distribution with complete soil testing results showing compliance with requirements:

i. Horticultural Drainage Material: Three (3) 1 quart samples in sealed labeled bags.

ii. Horticultural Subsoil: Three (3) 1 quart samples in sealed labeled bags.

iii. Planting Soil for Beds & Pits: Three (3) 1 quart samples in sealed labeled bags.

iv. Planting Soil for Seeded and Sodded Lawns: Three (3) 1 quart samples in sealed labeled bags.

v. Resubmissions of verification of soil mix samples shall be accompanied by a matching material test report.

c. Stockpile QA/QC Samples: Submit to the Engineer with complete soil testing

results showing compliance with requirements. Demonstrate consistency of soil mixes with the corresponding approved mix soil test. If, in the opinion of the Engineer, off-site stock-pile testing is not consistent with the approved mix, Contractor shall abandon the stockpile and remix soils for a new stockpile, making adjustments as recommended by Contractor's testing lab and as approved by the Engineer.

i. Horticultural Drainage Material: Three (3) 1 quart samples in sealed labeled bags submitted to the Engineer for distribution.

ii. Horticultural Subsoil: Three (3) 1 quart samples in sealed labeled bags submitted to the Engineer for distribution.

iii. Planting Soil for Beds & Pits: Three (3) 1 quart samples in sealed labeled bags submitted to the Engineer for distribution.

iv. Planting Soil for Seeded and Sodded Lawns: Three (3) 1 quart samples in sealed labeled bags.

v. The Contractor, as often as requested by the Engineer, shall submit three (3) quart bags of each planting soil mix material with the matching material test report for each stockpile sample taken.

vi. Resubmissions of stockpile samples shall be accompanied by a matching material test report.

d. Site-Delivered QA/QC Samples: Submit as often as requested by the Engineer three (3) quart bags of each planting soil mix or material delivered to the site with the matching material test report for each stockpile sample taken. Provide resubmissions of samples with a matching material test report.

E. Planting Soil Quality Assurance Plan: Prepare a Planting Soil Quality Assurance Plan demonstrating Contractor's approach to sourcing planting soil, mixing, stockpiling, testing, tracking and delivery. Submit to Engineer for Approval prior to the start of soil sourcing work.

F. Material Delivery Tickets: Each barge or truck load of Horticultural Soil Material must be accompanied by a delivery ticket indicating the date of loading, volume of material, horticultural soil type and off-site stockpile source number it has been taken from. Provide a copy of each delivery ticket to the Engineer prior to unloading.

PK-ESCR 937.2.3. QUALITY ASSURANCE.

A. Horticultural Soil Supplier: A supplier with sufficient experience in the supply and custom blending of soil components and mixes of similar types and volumes specified and indicated on the Drawings including, the creation of custom sand-based manufactured soils for similar landscape applications or golf course applications whose work has resulted in successful establishment of plants.

a. Subject to meeting the requirements, the following are acceptable horticultural soil suppliers:

i. Advanced Soil Technologies, Brick, NJ 08723, (732) 840-1700 www.advancedsoiltechnologies.com

ii. GreenPro Materials, Div. of Tri-State Materials LLC, Bound Brook, NJ 08805, (908) 647-0159 www.greenpromaterials.com

iii. Braen Supply, Haledon, NJ 07508, (973) 556-2698 www.braensupply.com

iv. Cedar Hill Landscaping, Somerset, NJ 08873, (732) 469-1400 www.cedarhilllandscaping.com

B. Soil Testing Laboratories: An independent soil testing laboratory with the experience and capability to conduct the testing indicated and that specializes in types of tests to be performed and capable of making soil recommendations, and issuing reports as specified herein, including the ability to make recommendations about soil blending ratios and methods, amendment recommendations, and issuing reports as specified herein.

a. Verify Testing Laboratories have the experience and capability to conduct the testing indicated and that specializes in types of tests to be performed and capable of making soil recommendations, and issuing reports as specified herein.

b. Horticultural Testing Laboratories: Subject to meeting the requirements, the following are acceptable horticultural testing laboratories:

i. Physical and Chemical Testing of Soils:

(1) McNitt & SerenSoil Testing, LLC, State College, PA, (610) 360-5985.

(2) Turf & Soil Diagnostics – NY, Trumansburg, NY, (855) 769-4231.

(3) University of Massachusetts Soil and Plant Tissue Testing Lab, Amherst, MA, (413) 545-2311.

(4) Approved Equal.

ii. Compost Testing:

(1) Soil FoodWeb New York, Center Moriches, NY 11716, (631) 750-1553.

(2) Penn State Analytical Services Lab, University Park, PA, (814) 863-0841.

(3) Woods End Research Laboratory, Mt. Vernon, ME, (207) 293-2457.

(4) AgroLab Harrington, DE 19952, (302) 566-6094.

(5) A&L Great Lakes Lab, Fort Wayne, IN 46080, (260) 483-4759.

iii. Biological Testing:

(1) Soil Food Web New York, Center Moriches, NY 11716, (631) 750-1553.

(2) Harrington Organics, Bloomfield, CT 06021, (800) 675-8733.

(3) Foothill Biological Soil Health Services, Grass Valley, CA 95945, (530) 648-0694.

(4) Earthfort, Corvallis, OR 97333, (541) 257-2612.

c. Environmental Testing Laboratories: a New York State Department of Health (NYSDOH) Environmental Laboratory Approval Program (ELAP)-certified laboratory

i. For a list of NYSDOH ELAP-certified laboratories see: https://www.wadsworth.org/regulatory/elap/certified-labs

C. Monthly Inspections of Off-Site Stock Piles:

a. The Engineer will inspect off-site stock piles monthly for compliance with these specification. Provide and pay for transportation for the Engineer or the Engineer's representatives to and from off-site stock pile facility locations and access to stock piles as required.

D. Horticultural Soil Installation Equipment:

a. Utilize light-weight, low-ground pressure equipment that makes us of wide tracks or low inflation tires that will not exert a ground pressure greater than four (4) PSI.

E. Horticultural Soil Profile Mock-Ups:

a. Prior to the start of horticultural soil installation, complete an on-site mock-up of each planting soil profile with all required layers.

b. Mock-up size: a minimum of 15' x 15' fully installed and tested, indicating compliance with requirements to the satisfaction of the Engineer.

c. Install mock-ups with the actual crews intended for the installation using the actual equipment to be used for the installation, as approved by submittals.

d. Successful mock-ups may remain in place as part of finished work as permitted by the Engineer.

F. In-place Soil Testing: Test in-place Horticultural Soils with a third party testing lab employed by and paid for by the Contractor. Complete penetrometer testing frequency in accordance with "Field Quality Control" herein.

a. Comply with the following instructions when using a penetrometer:

i. Avoid taking measurements when soil is too wet or too dry. Soil moisture at or slightly drier than field capacity is best.

ii. The penetrometer should be inserted at a constant rate of 1.2 inches/sec (3 cm/sec). Small variations will not affect the reading. Starting and stopping also will not affect the reading.

iii. Insert the soil penetrometer smoothly without jerking motions. A jerking motion will result in erroneous measurements.

iv. Measure subsoil to the depth shown on the Drawings less 3 inches.

v. Measure planting soil to the full depth shown on the Drawings.

vi. Stop insertion if soil readings exceed specified resistance and record measurement.

vii. Continue penetration to depth required and record final penetration reading.

PK-ESCR 937.2.4. DELIVERY, STORAGE, AND HANDLING.

A. Offsite Stockpile Maintenance:

a. Stockpile horticultural soil component materials and planting soil mixes without intermixing.

b. Do not store off-site stockpiled materials in mounds greater than six (6) feet high. Turn stockpiles at a minimum every two (2) weeks to prevent anaerobic conditions.

Place, grade, and shape stockpiles to drain surface water.

c. Cover stockpiles with a breathable fabric to prevent windblown dust and protect from erosion. Do not cover stockpiles with plastic.
d. Protect stockpiles from contamination from other materials, from erosion and deposition of water and wind borne materials of any kind.
e. Prohibit vehicular and pedestrian traffic on stockpiled materials.

B. Accessory and Packaged Materials:

a. Store and handle packaged materials in strict compliance with manufacturer's instructions and recommendations. Protect all materials from weather, damage, injury and theft.

C. Bulk Materials:

a. Sequence deliveries to avoid delay. On-site storage space is permissible only with written notice from the Engineer. Coordinate material deliveries only after preparations for placement of planting soil have been completed.

b. Stockpile on-site horticultural soil component materials and planting soil mixes without intermixing.

c. Do not store on-site stockpiled materials in mounds greater than six (6) feet high. Turn stockpiles at a minimum every two (2) weeks to prevent anaerobic conditions. Place, grade, and shape stockpiles to drain surface water.

d. Cover stockpiles with a breathable fabric to prevent windblown dust and protect from erosion. Do not cover stockpiles with plastic.

e. Protect stockpiles from contamination from other materials, from erosion and deposition of water and wind borne materials of any kind.

f. Prohibit vehicular and pedestrian traffic on stockpiled materials.

D. Environmental Requirements:

a. Do not handle, mix, haul, or deliver Horticultural Soils or component materials when excessively dry, wet, or frozen, or during or immediately after a heavy rainfall. Handle soil materials and components only when the moisture content is less than or equal to the optimum water content as determined for the Standard Proctor test. If the soil glistens or free water is observed when the sample is patted in the palm of hand, the soil is too wet and shall not be worked. The Engineer shall determine if the soil is too wet to handle.

b. Apply water to Horticultural soils, if necessary, or allow Horticultural Soils to dry to bring soil moisture between 60% of optimum moisture content on the dry side of optimum and optimum moisture content as determined by ASTM D698 for mixing. The Speedy Moisture Tester can be used to determine soil moisture on stockpiled soils. The Contractor shall coordinate procedures to allow for drying and mixing of planting soils that exceed maximum allowable moisture contents.

E. Delivery And Approval:

a. Notify the Engineer a minimum of 48 hours prior to the intended horticultural soil delivery dates.

b. Provide a delivery ticket for each truck or barge delivery of horticultural soils indicating the date of loading, volume of material, horticultural soil type and off-site

stockpile source number it has been taken from.

c. Horticultural soil materials delivered by barge or in trucks will be subject to visual inspection and additional testing as deemed necessary by the Engineer. The Engineer reserves the right to reject on or after delivery any material that does not, in their opinion, meet the limitations of this specification and approved samples, test reports and off-site stock pile inspections. Do not install horticultural soil materials until the Engineers' inspection, sampling and/or testing is completed, unless otherwise directed by the Engineer.

d. Where horticultural soil is rejected, immediately remove rejected materials from the site. Where it has been determined by the Engineer that soil amendments are allowable, the correction shall be made at the Contractor's expense. Additional testing after amending shall also be at the Contractor's expense.

e. Perform on-site horticultural soil testing with the original testing laboratories used to achieve the initial component and soil mix approvals, unless otherwise noted by the Engineer.

F. Appeal Process:

a. Horticultural Soil Testing: The Engineer shall visually check for discrepancies between the delivered soil and the approved submittal and sample. If the Engineer suspects that the topsoil delivered to the site has excessively high levels of organic matter, clay, etc. that would not be within the allowable levels listed in this specification, the soil will be rejected until additional testing proves otherwise. Should the Contractor contest the Engineer's determination, the Engineer will take samples so additional tests may be performed at Contractor's expense. These results shall be considered final.

b. Environmental Testing: The Engineer shall check for discoloration and evidence of unacceptable contents or signs of potential contamination. If the Engineer suspects that the fill possesses hazardous or contaminated characteristics, it will be rejected. Should the Contractor contest the Engineer's determination, the Engineer will take samples so additional tests may be performed at Contractor's expense at a laboratory certified by the NYSDOH ELAP for the selected analytical method.

i. Environmental testing of all horticultural soil mixes shall include, but not be limited to, USEPA Standard Test Methods for determination of total contaminant concentrations for the complete list of 6 NYCRR Part 375-6.8 parameters. Analysis of the horticultural soil mixes shall be performed by USEPA Methods SW846; 8260 for Volatile Organics, 8270 for Semi-Volatile Organics, 8081 for Pesticides, and 8082 for Polychlorinated Biphenyls (PCBs), and 6010 for Metals. Other hazardous waste characteristic tests may include those for ignitability, corrosivity, and reactivity, as deemed required by the Engineer.

ii. As specified in MATERIALS above, clean fill shall meet NYSDEC Part 375 RURR SCOs and not exceed hazardous waste characteristic criteria (40 CFR Part 261). If the clean fill fails, then the Contractor shall be responsible for:

(1) Payment of fees for services of the NYSDOH ELAP certified lab;

(2) Removal and legal disposal of unacceptable fill;

(3) Replacement with acceptable clean fill; and,

(4) All other expenses, as well as potential fines that may be incurred.

PK-ESCR 937.2.5. COORDINATION, SEQUENCING AND SCHEDULING.

A. General: Coordinate the production, stockpiling, and delivery of horticultural soils to the project site in accordance with the Project Schedule as provided and regularly updated by the Engineer.

B. Coordinate horticultural soil installation with subsequent biochar and planting operations so as to not compact horticultural soils by planting operations.

C. Project Schedule: Coordinate with the soil supplier in order for the delivery schedules to be in sync with phased and sequenced site construction and planting schedules. Coordination shall include but not be limited to:

   a. Provide Engineer monthly access for inspection at the off-site soil mixing and stockpile locations.

   b. Testing and approval of soil component and planting mix materials at the indicated frequency.

   c. Availability of stockpiled horticultural soils in sufficient quantities to keep pace with installation schedules

   d. Delivery times, including overtime and night time deliveries occurring outside the Soil Supplier's regularly scheduled work week.

   e. Project site delivery methods by either barge or truck.

   f. Installation and protection of Horticultural Planting Soils in a manner that prevents compaction during subsequent planting operations.

D. Estimated Soil Sourcing and Mix Design Approvals: Plan for adequate time for the sourcing, testing and approval of planting soil component materials and mixes. **The sourcing, testing and approval of soil mix components as well as the design, approval and stockpiling of soil mixes can take six months or more depending upon seasonal conditions and quality of materials sourced.** Do not deliver Horticultural Soil materials and Mixes to the site without prior approval by the Engineer.

E. Estimated Soil Testing Durations: The following soil testing durations are provided as a guide for the contractor to be able to bid the project based on a realistic schedule. Actual testing durations may vary depending upon the contractors' ability to send materials to their approved testing lab, the testing labs' ability to complete multiple testing protocols simultaneously, the testing lab's ability to manage high seasonal demands for soil testing, and the ability of the contractor to deliver test reports as required.

   a. Soil component materials: Sand, Topsoil, and batch quantities of Planting Soil Mixes testing and reporting is estimated to take five (5) to ten (10) business days per sample including the following tests:

      i. dry and wet sieving

      ii. Hydrometer

      iii. nutrient content

      iv. Ph

v. organic matter content

vi. soluble salts

vii. saturated hydraulic conductivity

b. Final Planting Soil Mixes, in stockpile quantities after initial soil mix approvals, testing and reporting is estimated to take five (5) to ten (10) business days per sample including the following tests:

i. dry and wet sieving

ii. Hydrometer

iii. nutrient content

iv. pH

v. organic matter content

vi. soluble salts

vii. saturated hydraulic conductivity

c. Compost testing is estimated to take 21 to 28 business days per sample including the following tests:

i. C:N ratio

ii. Maturation test

iii. pH

iv. Organic matter content

v. Salinity

vi. Pathogens/Metals/Vector Attraction

vii. Nutrient content

viii. Biological Organisms

d. Biological testing of final approved Planting Soil Stockpiles is estimated to take 14-18 business days.

e. Environmental testing is estimated to take 18-24 business days.

PK-ESCR 937.3. METHODS

A. Examination and Preparation:

a. Notify the Engineer of soil placement operations at least seven calendar days prior to the beginning of work.

b. Verify that the locations of utilities, structures and other underground items have been clearly marked.

c. Verify that the plumbing for the irrigation system main lines have been installed and accepted by the Engineer.

d. Verify that the underdrainage system has been installed and accepted by the Engineer.

e. Verify that the subgrade elevations meet required elevations and have been accepted by the Engineer.

f. Before proceeding with work, notify the Engineer in writing of unsuitable conditions and conflicts.

B. Installation – General

a. Do not move or work planting soils when it is a wet or frozen condition. In all cases, the soil being placed shall be in a dry to damp condition with a moisture content not greater than optimum as determined by the Standard Proctor test. No wet soils shall be placed.
b. Place Horticultural Drainage Material, Horticultural Subsoil, Planting Soil for Beds and Pits and Planting Soil for Seeded and Sodded Lawn Areas in lifts compacted to meet profiles indicated on the Drawings.
c. Form transition layers between soils soil types and lifts with a light scarification of the horticultural soil surface prior the installation of each subsequent lift is required to break up any compacted surface and eliminate a compaction interface.
d. Prevent over compacted soils by beginning the work against walls or pavement edges, or in the center of planting beds or lawn area, and progressing outwards towards the borders. Place barricades as required to prevent any unnecessary compaction of planting soil from vehicles, equipment, or pedestrian traffic. Remove or restore to compliant conditions placed planting soils exhibiting noncompliant compaction values.

C. Planting Soil Mock-Up:

a. Prior to the start of horticultural soil installation, comply with mock-up requirements for each indicated soil profile as described in Quality Assurance section of this specification.

D. Subgrade Preparation:

a. After subgrade levels have been inspected and tested, and immediately prior to placing Horticultural Soils, scarify subgrade that the planting soil is placed upon to a minimum depth of four inches utilizing a toothed bucket of a backhoe or equivalent equipment.

E. Horticultural Drainage Layer Installation:

a. Install Drainage layer over the scarified existing or prepared subgrade where indicated on the Drawings.

b. Install Horticultural Subsoil with approved low-ground pressure equipment.

c. Install Drainage layer in one six (6) inch lift. Compaction the drainage layer with light tamping by installers foot traffic. Do not mechanically compact the drainage layer.

F. Horticultural Subsoil Installation:

a. Place and spread Horticultural Subsoil over the Drainage Layer or on the scarified subgrade as indicated on the Drawings.
b. Install Horticultural Subsoil with approved low-ground pressure equipment.
c. Do not back-blade Horticultural Subsoil as it will contribute to over compaction.
d. Light foot traffic and low-ground pressure equipment is allowable for placing subsequent lifts and is needed to seat the soil layers within the profile, reducing overall subsidence.
e. Lightly scarify of the surface of each lift with hand tools to break up any compacted surface and eliminate any compaction interface. Higher trafficked areas will require

greater amounts of scarification as determined by the Engineer.

f. Reducing the amount of compaction to the soils can be accomplished by beginning the work in corners, against walls or at the center of isolated beds and progressing outwards. This approach limits the amount of traffic needed for installation on the placed soil.
g. Penetration resistance of installed Horticultural Subsoil as measured by the Engineer shall not exceed 220 PSI. Horticultural subsoil shall be uniformly increasing in density with depth. There shall not be any compacted layers (readings exceeding 290 PSI) within the soil profile. If readings of over 220 PSI are discovered, the Engineer shall take additional readings as required to determine if the soil is overly compacted.
h. Decompact Horticultural Subsoil tested at 2200 PSI or higher as directed by the Engineer to obtain an installation that does not exceed readings of 220 PSI.
i. Place and spread Horticultural Planting Soil to a depth greater than required such that after settlement, finished grade conforming to the lines, grades and elevations shown on the Drawings. Ensure proper drainage in an uninterrupted pattern free of hollows and pockets.
j. Remove stiff clods, lumps, brush, roots, stumps, litter and other foreign material and stones over one inch in diameter as discovered during operations and dispose of legally off site.

G. Seeded and Sodded Lawn Area Soil Mix Installation:

a. Lightly scarify of the surface of the Horticultural Subsoil with hand tools to break up any compacted surface and eliminate any compaction interface. Higher trafficked areas will require greater amounts of scarification as determined by the Engineer.

b. Install Planting Soil over the prepared Horticultural Subsoil to the depths indicated on the Drawings.

c. Install Planting Soil with approved low-ground pressure equipment.

d. Do not back-blade Horticultural Subsoil as it will contribute to over compaction.

e. Light foot traffic and low-ground pressure equipment is allowable for placing subsequent lifts and is needed to seat the soil layers within the profile, reducing overall subsidence.

f. Lightly scarify of the surface of each lift with hand tools to break up any compacted surface and eliminate any compaction interface. Higher trafficked areas will require greater amounts of scarification as determined by the Engineer.

g. Penetration resistance of installed Horticultural Subsoil as measured by the Engineer shall not exceed 140 PSI. Horticultural subsoil shall be uniformly increasing in density with depth. There shall not be any compacted layers (readings exceeding 290 PSI) within the soil profile. If readings of over 140 PSI are discovered, the Engineer shall take additional readings as required to determine if the soil is overly compacted.

h. Decompact Horticultural Subsoil as directed by the Engineer to obtain an installation that does not exceed readings of 140 PSI.

i. Place and spread Horticultural Planting Soil to a depth greater than required such that after settlement, finished grade conforming to the lines, grades and elevations shown on the Drawings. Ensure proper drainage in an uninterrupted pattern free

of hollows and pockets.

j. Remove stiff clods, lumps, brush, roots, stumps, litter and other foreign material and stones over one inch in diameter as discovered during operations and dispose of legally off site.

H. Planting Bed Soil Mix Installation:

a. Lightly scarify of the surface of the Horticultural Subsoil with hand tools to break up any compacted surface and eliminate any compaction interface. Higher trafficked areas will require greater amounts of scarification as determined by the Engineer.

b. Install Planting Soil over the prepared Horticultural Subsoil to the depths indicated on the Drawings.

c. Install Planting Soil with approved low-ground pressure equipment.

d. Do not back-blade Horticultural Subsoil as it will contribute to over compaction.

e. Light foot traffic and low-ground pressure equipment is allowable for placing subsequent lifts and is needed to seat the soil layers within the profile, reducing overall subsidence.

f. Lightly scarify of the surface of each lift with hand tools to break up any compacted surface and eliminate any compaction interface. Higher trafficked areas will require greater amounts of scarification as determined by the Engineer.

g. Penetration resistance of installed Horticultural Subsoil as measured by the Engineer shall not exceed 140 PSI. Horticultural subsoil shall be uniformly increasing in density with depth. There shall not be any compacted layers (readings exceeding 290 PSI) within the soil profile. If readings of over 140 PSI are discovered, the Engineer shall take additional readings as required to determine if the soil is overly compacted.

h. Decompact Horticultural Subsoil as directed by the Engineer to obtain an installation that does not exceed readings of 140 PSI.

i. Place and spread Horticultural Planting Soil to a depth greater than required such that after settlement, finished grade conforming to the lines, grades and elevations shown on the Drawings. Ensure proper drainage in an uninterrupted pattern free of hollows and pockets.

j. Remove stiff clods, lumps, brush, roots, stumps, litter and other foreign material and stones over one inch in diameter as discovered during operations and dispose of legally off site.

I. Finished Grading: Grade to finished grades indicated within 0.10 foot. Grade areas to drain water away from buildings or walls or other vertical structures and to provide suitable surfaces for mowing machines. Existing grades which are to remain but are disturbed by the Contractor's operations shall be restored.

J. Protection: Protect work of this section until Substantial Completion.

a. Select equipment and otherwise phase the installation of the planting to ensure that wheeled equipment does not travel over prepared horticultural subsoil or planting soil. Movement of tracked equipment over said soils will be reviewed and considered for approval by the Engineer. If it is determined by the Engineer that wheeled equipment must travel over already installed planting soil, provide a

written description of sequencing of work that ensures that compacted soil is loosened and un-compacted as the work progresses or place 3/4” plywood over the length and width of any travel way to cover planting soil to protect it from compaction.

b. Disturbed areas outside the limit of work shall be protected and as required, graded smooth and spread with planting soil to meet finished grades.

c. Protect installed Horticultural Soils from wind and water erosion. Comply with soil and erosion control requirements specified under separate items.

d. Repair soil profiles where wind or water erosion has occurred to the satisfaction of the Engineer.

K. Acceptance:

a. Confirm that the final grades of the Soils are at the proper finish grade elevations. Adjust grade with approved materials as required to meet the contours and spot elevations noted on the Plans. Request the presence of the Engineer to inspect final grade. Do not proceed with the remaining work of this Contract until the Engineer has given written approval of the final grade.

b. Protect areas of in-place soil from additional compaction, disturbance, and contamination. Prohibit the following practices within these areas except as required to perform planting operations:

i. Storage of construction materials, debris, or excavated material.

ii. Parking vehicles or equipment.

iii. Vehicle traffic.

iv. Foot traffic.

v. Erection of sheds or structures.

vi. Impoundment of water.

vii. Excavation or other digging unless otherwise indicated.

c. If planting soil or subgrade is over compacted, disturbed, or contaminated by foreign or deleterious materials or liquids, remove the planting soil and contamination; restore the subgrade as directed by Engineer and replace contaminated planting soil with new planting soil.

L. Cleaning:

a. Protect areas adjacent to planting-soil preparation and placement areas from contamination.

b. Keep adjacent paving and construction clean and work area in an orderly condition.

c. Remove surplus soil and waste material including excess subsoil, unsuitable materials, trash, and debris and legally dispose of them off Owner's property unless otherwise indicated.

M. Post-Installation Biochar amendment: In accordance with Bid Item PK-ESCR – 945 BIOCHAR.

N. Post-Installation Compost Tea Applications: In accordance with Bid Item PK-ESCR – 951 COMPOST TEA.

PK-ESCR 937.4. FIELD QUALITY CONTROL

A. Field Quality Control:

a. Testing Agency: Engage a qualified testing agency to perform field quality control tests and inspections.

b. Perform the following tests and inspections:

i. In-place Compaction Testing with Penetrometer: As indicated under “Quality Assurance” herein. Complete in-place soil testing using a hand held penetrometer at a rate of one point every 1,000 square feet for installed horticultural soil prior to covering with planting soil and one point every 1,000 square feet for installed planting soil for beds and pits or seeded & sodded lawn areas.

ii. Compaction Testing: In addition to penetrometer testing, test in-place density for horticultural soil materials shall be made according to ASTM D1556 or ASTM D6938-08a. Compaction tests shall be conducted each 20,000 square feet for each soil type layer after each soil type has been placed, as directed by the Engineer. The engineer may direct additional testing in locations subject to compaction or adverse Contractor operations.

iii. Percolation testing: Test percolation of all Planting Soils using Turf-Tec IN2-W Infiltrometer utilizing manufacturer’s operating instructions. Percolation tests shall be conducted each 20,000 square feet for each soil type after each soil type has been placed, as directed by the Engineer. The engineer may direct additional testing in locations subject to compaction or adverse Contractor operations. Remove or restore to compliant conditions placed planting soils exhibiting noncompliant percolation values.

c. Prepare test and inspection reports.

d. Label each test report with the date, location keyed to a site plan or other location system, visible conditions when and where sample was taken, and sampling depth.

e. Soil installation will be considered defective if it does not pass tests and inspections.

f. Make corrections as directed by the Engineer and re-test until compliance with the requirements is achieved.

PK-ESCR 937.5. MEASUREMENT.

A. PER LUMP SUM

Payment for SOURCING AND APPROVAL OF COMPONENT MATERIALS, APPROVAL OF PLANT SOIL MIXES, and FIRST PHASE STOCKPILING OF SOIL MATERIALS will be made on a Lump Sum basis for work satisfactorily completed. Monthly payments will be made in proportion to the amount of work done as determined by the Engineer.

B. PER CUBIC YARD

Payment for the quantity of HORTICULTURAL DRAINAGE LAYER, HORTICULTURAL SUBSOIL, PLANTING SOIL FOR BEDS & PITS, or PLANTING SOIL FOR SEEDED & SODDED LAWN AREAS to be paid for shall be the number of cubic yards delivered to the project site by barge or truck as verified by the Engineer prior to unloading. No payment will be made for HORTICULTURAL DRAINAGE LAYER, HORTICULTURAL SUBSOIL,

PLANTING SOIL FOR BEDS & PITS, or PLANTING SOIL FOR SEEDED & SODDED LAWN AREAS not delivered to the project site. The quantity of CHINKING STONE to be paid for under the Item shall be the number of CUBIC YARDS, furnished and placed in accordance with the plans, specifications, and directions of the Engineer.

C. PER LINEAR FOOT

Payment for the quantity of DRAINAGE FOR NATURAL TURF FIELDS to be paid for shall be the number of LINEAR FOOT constructed in accordance with the plans, specifications, and directions of the Engineer.

PK-ESCR 937.6. PRICES TO COVER

A. The Lump Sum (LS) contract price for

Item No. PK-ESCR 937 CM SOURCING AND APPROVAL OF COMPONENT MATERIALS

covers the cost of all labor, materials, equipment, insurance, and incidentals required for the sourcing horticultural soil component materials including Engineer approved submittal of qualified soil testing lab, and submittal of each component material showing compliance with the specifications, and a 50 CY stockpile of each soil component properly stored and stockpiled and inspected and approved by the Engineer.

B. The Lump Sum (LS) contract price for

Item No. PK-ESCR 937 PM APPROVAL OF PLANT SOIL MIXES

covers the cost of all labor, materials, equipment, insurance, and incidentals required for the sourcing, blending, testing, and stockpiling of Including a 500 CY stockpile of each soil material properly stored and stockpiled and approved by the Engineer including Engineer approved submittal documentation of mix design and batch testing showing compliance with the approved mix design at the first 250 CY and final 250 CY of each stockpiled soil material.

C. The Lump Sum (LS) contract price for

Item No. PK-ESCR 937 SP FIRST PHASE STOCKPILING OF SOIL MATERIALS

covers the cost of all labor, materials, equipment, insurance, and incidentals required for the sourcing, blending, testing, and off-site stockpiling of 1,000 CY each material properly piled and protected, and as inspected and approved by the Engineer, including Engineer approved submittal documentation showing batch testing showing compliance with each of the material requirements for each 1,000 CY of stockpiled material.

D. The contact prices per cubic yard (CY) for

Item No. PK-ESCR 937 A HORTICULTURAL DRAINAGE LAYER

Item No. PK-ESCR 937 B HORTICULTURAL SUBSOIL

Item No. PK-ESCR 937 C PLANTING SOIL FOR BEDS & PITS

Item No. PK-ESCR 937 D PLANTING SOIL FOR SEEDED & SODDED LAWN AREAS

covers the cost of all labor, materials, equipment, insurance, and incidentals required for

the component material sourcing, blending, testing, off-site stockpiling, coordination, sequencing and scheduling, delivery to the project site by truck or barge, on-site stockpiling and handling, mock-ups, installation, compaction, de-compaction, in-place testing and post-installation maintenance and protection. Installation of Biochar and Compost Tea shall be paid for under separate items.

E. The price bid shall be a unit price per CUBIC YARD of Chinking Stone furnished and placed and shall include the cost of all labor, materials, equipment, and incidental expenses necessary to complete the work, including laboratory testing (if necessary) and preparation of grades, all in accordance with the plans and specifications, to the satisfaction of the Engineer.

F. The price bid shall be a unit price per linear foot (LF) of DRAINAGE FOR NATURAL TURF FIELDS in the work complete, and shall include furnishing of all labor, materials, equipment and expenses necessary to complete the work, including prepare the subgrade, geotextile - separation, horticultural drainage layer, and underdrain, all in accordance with the plans and specifications, to the satisfaction of the Engineer.

Payment will be made under:

Item No.	Item	Pay Unit
PK-ESCR 937 CM	**SOURCING AND APPROVAL OF COMPONENT MATERIALS**	**LS**
PK-ESCR 937 PM	**APPROVAL OF PLANT SOIL MIXES**	**LS**
PK-ESCR 937 SP	**FIRST PHASE STOCKPILING OF SOIL MATERIALS**	**LS**
PK-ESCR 937 A	**HORTICULTURAL DRAINAGE LAYER**	**CY**
PK-ESCR 937 B	**HORTICULTURAL SUBSOIL**	**CY**
PK-ESCR 937 C	**PLANTING SOIL FOR BEDS & PITS**	**CY**
PK-ESCR 937 D	**PLANTING SOIL FOR SEEDED & SODDED LAWN AREAS**	**CY**
PK-ESCR 937 CS	**CHINKING STONE**	**CY**
PK-ESCR 967	**DRAINAGE FOR NATURAL TURF FIELDS**	**LF**

END OF SECTION

SECTION PK-ESCR 943 – PARK SECURITY MEASURES

WORK: Under this item, the Contractor shall furnish, erect, and powder coat **PARK SECURITY MEASURES**, in accordance with the plans, specifications, and directions of the Engineer.

QUALIFICATIONS:

Manufacturer:

- For security gate, a company specializing in the manufacturer of Anti-Ram barriers of the type specified, with a minimum of five (5) years' experience manufacturing operators of this type and design.
- For security bollards, manufacturer to have a minimum of 5 years with documented field experience with similar vehicle barriers.

  If parks security measures are based on engineering instead of testing, a Professional Engineer licensed in New York with a minimum of 5 years of experience in projects of similar scope and complexity is to provide a design based on methodologies and calculations to evaluate the performance of bollards in response to the vehicle impact. Proposed design methodologies shall be submitted to Engineer for approval prior to commencement of work.

Installer: Must have a minimum of three (3) years' experience installing similar equipment or obtain other significant manufacturer endorsement of technical aptitude, if required, during the submittal process.

MATERIALS:

Unless otherwise herein specified, all materials of construction shall meet the requirements of the NYCDOT Standard Highway Specifications.

Concrete: Per Section ESCR-4.06.

Reinforcement: Per Section ESCR-4.14

PRODUCTS:

Fixed Bollard Type 1: K8 Rated Fixed Bollard with shallow mounted footing (Truckstopper 7 by Tymetal or approved equal) Address: SafetyFlex Anti Terrorist Barriers and distributed by Tymetal Corp., 678 Wilbur Avenue, Greenwich, NY 12834 – (800) 328 – 4283.

Fixed Bollard Type 2: K4 Rated Fixed Bollard with shallow mounted footing (Truckstopper 6 by Tymetal or approved equal) Address: SafetyFlex Anti Terrorist Barriers and distributed by Tymetal Corp., 678 Wilbur Avenue, Greenwich, NY 12834 – (800) 328 – 4283.

Security Gate: K8 Rated Gate, Terra Ultimate 180 Swing Barrier by Frontier Pitts or approved Equal Address: Crompton House,Crompton Way,Manor Royal Industrial Estate,Crawley,West Sussex RH10 9QZ

Removable Bollard: K8 Rated Bollard with shallow mounted footing (Truckstopper 7 by Tymetal or approved equal) Address: SafetyFlex Anti Terrorist Barriers and distributed by Tymetal Corp., 678 Wilbur Avenue, Greenwich, NY 12834 – (800) 328 – 4283.

Fixed Bollard Type 3: Custom K4 Rated Fix Bollard with custom dimensioned shallow mounted footing and custom bollard extension arm per drawings (Custom Truckstopper 6 by Tymetal or approved equal) Address: SafetyFlex Anti Terrorist Barriers and distribution by Tymetal Corp., 678 Wilbur Avenue, Greenwich, NY 12834 – (800) 328 – 4283.

PERFORMANCE REQUIREMENTS:

Fixed Bollard Type 1: Impact Condition Designation M40, Penetration Rating P2, with a capability of stopping at 15,000lb vehicle traveling at speeds up to forty (40) mph with a vehicle penetration not to exceed twenty-three feet (23' [7 m]). The fixed bollard system shall be certified by an independent testing laboratory in accordance with ASTM F2656-15 or verified with engineering approved by the Engineer for finite element methods and models by a Professional Engineer licensed in New York State. Crash Test or Engineer shall be based on vehicle impact to a single bollard. If engineered, contractor to provide design methodologies and engineer calculations for review via submittal prior to work.

Fixed Bollard Type 2: Impact Condition Designation M30, Penetration Rating P1, with a capability of stopping at 15,000lb vehicle traveling at speeds up to thirty (30) mph with a vehicle penetration not to exceed three feet (3' [1 m]). The fixed bollard system shall be certified by an independent testing laboratory in accordance with ASTM F2656-15 or verified with engineering approved by the Engineer for finite element methods and models by a Professional Engineer licensed in New York State. Crash Test or Engineer shall be based on vehicle impact to a single bollard. If engineered, contractor to provide design methodologies and engineer calculations for review via submittal prior to work.

Security Gate: The manually operated vehicle barrier system shall be certified by an interdependent testing laboratory to meet one of the following performance requirements:

1. IWA 14-1:2013: Classification Code 7200(N2A)/80/90:4.7 for a 7,200kg vehicle weight travelling at 80kph (50mph) with a vehicle penetration not to exceed 4.7m (15ft).
2. PAS 68:2010: Classification V/7500(N2)/80/90/5 for a 7,500kg vehicle weight travelling at 80kph (50mph) with a vehicle penetration not to exceed 4.7m (15ft).
3. ASTM F2656-15: Impact Condition Designation M40, Penetration Rating P2, with a capability of stopping a 15,000lb vehicle traveling at speeds up to 40mph with a vehicle penetration not to exceed 7m (23ft).

Removable Bollard: Impact Condition Designation M40, Penetration Rating P2, with a capability of stopping at 15,000lb vehicle traveling at speeds up to forty (40) mph with a vehicle penetration not to exceed twenty-three feet (23' [7 m]). The removable bollard system shall be certified by an independent testing laboratory in accordance with ASTM F2656-15 or verified with engineering approved by the Engineer for finite element methods and models by a Professional Engineer licensed in New York State. Crash Test or Engineer shall be based on vehicle impact to a single bollard. If engineered, contractor to provide design methodologies and engineer calculations for review via submittal prior to work.

Fixed Bollard Type 3: Impact Condition Designation M30, Penetration Rating P1, with a capability of stopping at 15,000lb vehicle traveling at speeds up to thirty (30) mph with a vehicle penetration not to exceed three feet (3' [1 m]). Fixed Bollard Type 3 to have custom footing dimensions per drawings and custom Bollard Extension Arm. The fixed bollard system shall be certified by an independent testing laboratory in accordance with ASTM F2656-15 or verified with engineering approved by the Engineer for finite element methods and models by a Professional Engineer licensed in New York State. Crash Test or engineering shall be based on vehicle impact to a single bollard. If engineered, contractor to provide design methodologies and engineer calculations for review via submittal prior to work.

LOCKING MECHANISM: For Removable Bollard and Security Gate, the system shall be secured by an anti-tamper locking mechanism encasing the locking pin complying with New York City Fire Code Chapter 5, Section FC 506 for "Keys and Key Access" and provide a minimum of five (5)

FDNY standard “1620” compliant keys. Lock must not be case hardened. Provide a minimum of two (2) extra locking pins. Means and methods for bollard lifting mechanism and removal procedures shall be submitted for approval by the Engineer prior to installation.

ERECTION: The posts for bollards and gate shall be set in concrete footings as shown on the plans or as directed by the Engineer. The sleeves for removable bollards shall be set in concrete footings, as shown on the plans or as directed by the Engineer.

All posts and sleeves shall be set plumb and true to line and grade. Any post and sleeve not set true to line and grade shall be removed and replaced at the Contractor's expense. Bending posts to make them plumb will not be permitted.

Finish: All bollard security measures must be stainless steel with a brushed finish.

All gate security measures items shall be hot-dipped galvanized and powder coated with TGIC Polyester. Galvanizing shall provide an acceptable substrate for applied powder coatings. No lacquer, urethane, or other coatings which would prevent proper adhesion of powder coating shall be applied to the steel. The powder coating shall be applied to the galvanized steel pipe in such a manner that the coating will not peel off per manufacturer’s directions. Ensure surfaces to be coated are clean, dry, and free of grease, dust, rust, etc. Color shall be SAE International’s AMS-STD-595 Paint Code: 17178 ‘Aluminum / Silver’ (NYC DOT Standard ‘George Washington Bridge Gray’). The TGIC-Polyester shall be applied without voids, teas, or cuts that reveal the substrate and shall thoroughly adhere to the metal as described in Laboratory Test requirements below.

SUBMITTALS: All submittals shall submitted and approved prior to manufacture and be in accordance with the requirements of the S-Pages. Submittals to include:

Product Information and Testing Reports: The manufacturer’s literature for each product, including testing report with relevant information that clearly indicates testing conditions and how these apply to job conditions, along with all engineering for both standard testing conditions and deviations from standard testing conditions, shall be submitted.

Engineering Calculations: All engineering calculations, standard and deviations, must be submitted to the Engineer for approval.

Shop Drawings: Before the work is started, the Contractor shall submit shop drawings for approval for all security measure items. The Contractor shall submit shop drawings no later than four (4) months prior to the scheduled completion of the project. The Contractor shall submit the following information as required by the Engineer: materials, finishes, supports, hardware, fasteners, fittings, and accessories. Shop drawings to show relations to adjacent work, location of concrete footings, and reinforcement information. All drawings shall show English units. Metric units can be down in addition to English units.

Installation instructions: Submit two copies of manufacturer’s installation instructions for this specific project. Submit manufacturer’s completed warranty registration form to Engineer.

Project List: Submit list of product installations comparable to the subject job as reference. Include date of product installation, installer, and owner’s name and location of the project.

Design Mix report: The Contractor shall submit a concrete design mix report per the requirements of the Concrete for Structures Section 4.06.

Sample: A color sample. A finish sample.

Laboratory Test: TGIC-Polyester Powder Coat. A the direction of the Engineer, a sample of TBID-Polyester powder coated security gate shall be tested for bonding of the powder coating to the metal. Test shall be the Cross Hatch test per ASTM D3359, Method B or ASTM D4551 with no failure in the coating. Failure to satisfactorily pass this test will be a basis for rejection.

WARRANTY: Provide a warranty against all defects in materials or workmanship for five (5) years after the date of installation. Defective materials shall be replaced at manufacturer's discretion with new or reconditioned materials furnished by the manufacturer, at no cost to the owner.

MEASUREMENT AND PAYMENT: The quantity of **FIXED BOLLARD TYPE 1, FIXED BOLLARD TYPE 2, SECURITY GATE REMOVABLE BOLLARD** and **FIXED BOLLARD TYPE 3** to be paid for under these items shall be the number furnished and installed in accordance with the plans, specifications, and directions of the Engineer.

The price bid shall be separate unit price for **EACH** Fixed Bollard Type 1, furnished and erected, and shall include the cost for all labor, material, equipment, and incidental expenses necessary to complete the work, including excavation, concrete for structure and footing, steel reinforcement, and powder coating, where required, all in accordance with the plans and specifications, to the satisfaction of the Engineer.

The price bid shall be separate unit price for **EACH** Fixed Bollard Type 2, furnished and erected, and shall include the cost for all labor, material, equipment, and incidental expenses necessary to complete the work, including excavation, concrete for structure and footing, steel reinforcement, and powder coating, where required, all in accordance with the plans and specifications, to the satisfaction of the Engineer.

The price bid shall be separate unit price for **EACH** Security Gate, furnished and erected, and shall include the cost for all labor, material, equipment, and incidental expenses necessary to complete the work, including excavation, concrete for structure and footing, steel reinforcement, and powder coating, where required, all in accordance with the plans and specifications, to the satisfaction of the Engineer.

The price bid shall be separate unit price for **EACH** Removable Bollard, furnished and erected, and shall include the cost for all labor, material, equipment, and incidental expenses necessary to complete the work, including excavation concrete for park structures, powder coating, and padlock, where required, all in accordance with the plans and specifications, to the satisfaction of the Engineer.

The price bid shall be separate unit price for **EACH** Fixed Bollard Type 3, furnished and erected, and shall include the cost for all labor, materials, equipment, and incidental expenses necessary to complete the work, including excavation, concrete for structure and footing, steel reinforcement, and powder coating, where required, all in accordance with the plans and specifications, to the satisfaction of the Engineer.

Item No.	Item	Pay Unit
PK-ESCR 943 A	FIXED BOLLARD TYPE 1	EA
PK-ESCR 943 B	FIXED BOLLARD TYPE 2	EA
PK-ESCR 943 C	SECURITY GATE	EA
PK-ESCR 943 D	REMOVABLE BOLLARD	EA
PK-ESCR 943 E	FIXED BOLLARD TYPE 3	EA

END OF SECTION

SECTION PK-ESCR 944 – COMPOST

PK-ESCR 944.1. DESCRIPTION

A. Under this Item, the Contractor shall furnish, spread, and incorporate COMPOST —in existing or new soil, in accordance with the plans and specifications, to the satisfaction of the Engineer.

PK-ESCR 944.2. MATERIALS

A. Compost: A stable, humus-like material produced from the aerobic decomposition of organic residues which shall have been composted for a minimum of one year (12 months). The use of biosolids as feedstock for compost production is prohibited. Compost shall be a dark brown to black color and be capable of supporting plant growth with appropriate management applicable, with no visible free water or dust, with no unpleasant odor, and meeting the following criteria as reported by laboratory tests:

Criteria	Test Method	Acceptable Range
Feed stock		Brewer's waste, or leaf mulches are acceptable. Composted municipal waste (chipped, shredded and screened wood, leaves, bark, etc.) alone is not acceptable unless it meets all of the criteria noted
Carbon/Nitrogen Ratio		10:1 - 25:1
Degree of Maturity	Dewer Self Heating or	VI-V
	Solvita Maturity Index or	6-8
	CO^2 Evolution	1.2%C/day
Texture	Dry Sieve and Hydrometer	Screened to 1/2 inch maximum particle size, and not more that 3 percent material finer than 0.002mm as determined by hydrometer test on ashed material.
Foreign Material	Dry Weight	Debris such as metal, glass, plastic, wood (other than residual chips), asphalt or masonry shall not be visible and shall not exceed 1% dry weight.
Organic Matter %	Dry Weight	≥20 percent
pH	1:1 soil-distilled water suspension using a glass electrode pH meter American Society of Agronomy Methods of Soil Analysis, Part 2, 1986.	6.5 to 7.3
Ammonium	Extract	<200 PPM

Salinity	1:5 soil to water ratio extract	2.0 mmhos/cm (dS/m).
Nutrient Content	Extract	Total Nitrogen, Ammonium Nitrogen, Phosphorus, Potassium, Calcium, Magnesium, Sulfur, Calcium, Magnesium, Sodium, Iron, Aluminum, Manganese, Copper, Zinc.
Pathogens/Metals/Vector Attraction	Extract	Meet all Federal and State of New York requirements for applications to soils with human activity.

PK-ESCR 944.2.1. REFERENCES.

A. U.S. Compost Council's Test Methods for the Examination of Composting and Composts.

PK-ESCR 944.2.2. QUALITY ASSURANCE.

A. Compost Testing Laboratory: An independent soil testing laboratory with the experience and capability to conduct the testing indicated and that specializes in types of tests to be performed and capable of making soil recommendations, and issuing reports as specified herein, including the ability to make recommendations about soil blending ratios and methods, amendment recommendations, and issuing reports as specified herein.

   a. Verify Testing Laboratories have the experience and capability to conduct the testing indicated and that specializes in types of tests to be performed and capable of making soil recommendations, and issuing reports as specified herein.

   b. Subject to meeting the requirements, the following are acceptable testing laboratories:

      i. Compost Testing:

         1. Penn State Analytical Services Lab, University Park, PA, (814) 863-0841
         2. Woods End Research Laboratory, Mt. Vernon, ME, (207) 293-2457.
         3. Soil FoodWeb New York, Center Moriches, NY 11716, (631) 750-1553
         4. AgroLab Harrington, DE 19952, (302) 566-6094
         5. A&L Great Lakes Lab, Fort Wayne, IN 46080, (260) 483-4759

PK-ESCR 944.2.3. SUBMITTALS

A. Certified third party test reports for Compost material showing compliance with requirements dated no earlier than 60 days from time of submittal.

B. No Compost shall be delivered until the approval of test repots by the Engineer, but such approval does not constitute acceptance. The Engineer reserves the right to reject, on or after delivery, any material which does not, in their opinion, meet these specifications.

C. Product Data: For each type of product indicated.

a. Submit most recent printed information from manufacturer.

i. Compost: identify the material(s) from of which is it composed and identify the location where material was composted.

b. Data for the compost shall be no older than 30 days from date of the submittal submission.

D. Qualification Data:

a. Soil material supplier, including:

i. List of previous projects including project name, a contact name, phone number, and the number of cubic yards per each installation and a brief description of the project.

ii. Location where the planting soil mixes and component materials will be mixed and stockpiled including available soil mixing and stockpiling area.

b. Submit qualifications of Soil Testing Laboratory to be utilized for soil testing, including the resume of the staff anticipated to perform the required work of the project.

E. Material Test Reports:

a. General: Submit written reports of each sample tested. Each report to include the following as a minimum and such other information required specific to material tested:

i. Date issued.
ii. Project Title names of Contractor and supplier.
iii. Testing laboratory name, address and telephone number, and name(s), as applicable, of each field and laboratory inspector.
iv. Date, place, and time of sampling or test, with record of temperature and weather conditions.
v. Location of material source.
vi. Name and protocol of test performed.

b. Resubmissions of material samples shall be accompanied by a matching material test report.

c. Missing information, failure to use the specified testing protocol, or failure to supply a material sample as specified with the test report shall be grounds for rejection.

d. Lab test reports submitted for approval by the Engineer shall be dated no more than thirty (30) days from date of sample collection.

e. Contractor to bear responsibility for all costs associated with laboratory testing.

f. Test Reports: The Contractor shall submit test reports with each sample of compost for approval. Resubmissions of test reports shall be accompanied by a matching material sample.

i. Provide the following Testing for Compost:

1. Feedstock
2. Carbon/Nitrogen Ration (C/N)
3. Degree of Maturity

4. Texture (Particle Size)
5. Organic Content (%)
6. pH
7. Buffer pH
8. Cation Exchange Capacity
9. Soluble Salts
10. Nutrient Content (Total Nitrogen, Ammonium Nitrogen, Phosphorus, Potassium, Calcium, Magnesium, Sulfur, Calcium, Magnesium, Sodium, Iron, Aluminum, Manganese, Copper, Zinc)
11. Moisture Content
12. Pathogens/Metals/Vector Attraction
13. Test Frequency: One for each 100 CY of compost supplied, unless otherwise directed by the Engineer.

PK-ESCR 944.2.4. DELIVERY, STORAGE, AND HANDLING

A. Packaged Materials: Deliver packaged Compost materials in original, unopened containers showing weight, certified analysis, name and address of manufacturer, and compliance with local, state and Federal laws if applicable.

   a. Accompany each packaged delivery of Compost with delivery tickets.

B. Bulk Materials:

   a. Do not dump or store bulk materials near structures, utilities, walkways and pavements, or on existing turf areas or plants.

   b. Provide erosion-control measures to prevent erosion or displacement of bulk materials, discharge of soil-bearing water runoff, and airborne dust reaching adjacent properties, water conveyance systems, or walkways.

   c. Do not move or handle materials when they are wet or frozen.

   d. Accompany each bulk delivery of biochar with delivery tickets.

   e. When compost is stored on the job site, it shall be done as directed by the Engineer.

C. Weather Limitations: Proceed with Compost installation only when existing and forecasted weather conditions permit application to the soil when beneficial and optimum results may be obtained. Apply products during favorable weather conditions according to manufacturer's written instructions.

   a. Do not apply Compost during windy or rainy conditions.

PK-ESCR 944.2.5. COMPOST PRODUCERS

A. Subject to meeting the requirements, compost material is available from the following producers:

   a. Long Island Compost, Islip, NY

   b. “Nature's Choice Compost” by Nature's Choice Corp., Union, NJ,

   c. Agresoil Compost by Agresource, Inc. Amesbury, MA,

   d. Organic Recycling Inc. Orangeburg, NY

   e. Approved Equal.

PK-ESCR 944.3. METHODS

A. After all areas to be seeded, sodded or planted have been fine graded to their compacted depth as per the Drawings, compost shall be spread over the surface of the planting soil a rate of 1 cubic yard of Compost per 1,000 feet of planting soil surface, unless otherwise directed by the Engineer.

B. Thoroughly incorporate the biochar into the top five (5) inches of the planting soil by hand with a rototiller.

PK-ESCR 944.4. MEASUREMENT

A. The quantity of Compost to be paid for shall be the number of cubic yards furnished in accordance with the plans and specifications, to the satisfaction of the Engineer. The Compost shall be measured as delivered in bulk containers, bags or trucks at point of delivery and as documented by delivery tickets.

PK-ESCR 944.5. PRICES TO COVER

A. The contact prices per cubic yard (CY) for Item No. PK-ESCR 944 COMPOST shall cover the cost of all labor, materials, equipment, insurance, testing and incidentals required furnish, spread, and incorporate COMPOST in planting soil to the satisfaction of the Engineer.

Payment will be made under:

Item No.	Item	Pay Unit
PK-ESCR 944	COMPOST	CY

END OF SECTION

SECTION PK-ESCR 945 – BIOCHAR

PK-ESCR 945.1. DESCRIPTION

A. Under this Item, the Contractor shall furnish, spread, and incorporate BIOCHAR in existing soil, in accordance with the plans and specifications, to the satisfaction of the Engineer.

PK-ESCR 945.2. MATERIALS

A. Biochar: Class I Material, screened to ≤ 1/4” (6.35 mm). Biochar shall meet the requirements of the International Biochar Initiative (IBI 0STD. 2.1) for Categories A and B. Biochar shall be a solid material obtained from thermochemical conversion of biomass in an oxygen-limited environment (pyrolysis) containing at least 60% carbon. Feedstocks may be composed of crop residue, wood or other forest waste. Biosolids, sewer sludge, animal wastes and other feedstocks may not be used in biochar material supplied. Biochar shall not include other soil conditioners, fertilizers or amendments.

PK-ESCR 945.3.1. REFERENCES

A. International Biochar Initiative (IBI 0STD. 2.1), Standardized Product Definition and Product Testing Guidelines for Biochar That Is Used in Soil, November 2015.

PK-ESCR 945.3.2. SUBMITTALS

A. Certified third party test reports for Biochar material showing compliance with requirements dated no earlier than 60 days from time of submittal.

B. No Biochar shall be delivered until the approval of test repots by the Engineer, but such approval does not constitute acceptance. The Engineer reserves the right to reject, on or after delivery, any material which does not, in their opinion, meet these specifications.

PK-ESCR 945.3.3. DELIVERY, STORAGE, AND HANDLING

A. Packaged Materials: Deliver packaged biochar materials in original, unopened containers showing weight, certified analysis, name and address of manufacturer, and compliance with state and Federal laws if applicable.

    1. Accompany each packaged delivery of biochar with delivery tickets.

B. Bulk Materials:

    1. Do not dump or store bulk materials near structures, utilities, walkways and pavements, or on existing turf areas or plants.

    2. Provide erosion-control measures to prevent erosion or displacement of bulk materials, discharge of soil-bearing water runoff, and airborne dust reaching adjacent properties, water conveyance systems, or walkways.

    3. Do not move or handle materials when they are wet or frozen.

    4. Accompany each bulk delivery of biochar with delivery tickets.

    5. When compost is stored on the job site, it shall be done as directed by the Engineer.

C. Weather Limitations: Proceed with biochar installation only when existing and forecasted weather conditions permit application to the soil when beneficial and optimum results may be obtained. Apply products during favorable weather conditions according to manufacturer's written instructions.

1. Do not apply biochar during windy or rainy conditions.

PK-ESCR 945.3.4. MANUFACTURER

A. Subject to meeting the requirements, the Biochar material is available from the following producers:

1. Biochar Solutions, Carbondale, CO
2. Char-Grow, Asheville, NC
3. Wakefield Biochar, Columbia, MO
4. Biochar Supreme, LLC, Everson, WA
5. Approved Equal.

PK-ESCR 945.4. METHODS

A. After all areas to be sodded or planted have been fine graded to their compacted depth as per the Drawings, biochar shall be spread over the surface of the planting soil a rate of one half (1/2) inch depth of biochar material to the surface of planting soil. (1.5 cubic yards of biochar per 1,000 feet of planting soil surface.)

B. Thoroughly incorporate the biochar into the top five (5) inches of the planting soil by hand with a rototiller.

PK-ESCR 945.5. MEASUREMENT

A. The quantity of BIOCHAR to be paid for shall be the number of cubic yards furnished in accordance with the plans and specifications, to the satisfaction of the Engineer. The biochar shall be measured as delivered in bulk containers, bags or trucks at point of delivery and as documented by delivery tickets.

PK-ESCR 945.6. PRICES TO COVER

A. The contact prices per cubic yard (CY) for Item No. PK-ESCR 945 BIOCHAR shall cover the cost of all labor, materials, equipment, insurance, testing and incidentals required furnish, spread, and incorporate BIOCHAR in planting soil to the satisfaction of the Engineer.

Payment will be made under:

Item No.	Item	Pay Unit
PK-ESCR 945	Biochar	CY

END OF SECTION

SECTION PK-ESCR 946 – GEOCOMPOSITE DRAINAGE BOARD

PK-ESCR 946.1. DESCRIPTION

A. This section describes the furnishing and installation of GEOCOMPOSITE DRAINAGE BOARD in accordance with the plans, specifications and directions of the Engineer. □

PK-ESCR 946.2. MATERIALS

A. Geocomposite Drainage Board: An impermeable dimpled polypropylene sheet drainage core bonded to a layer of nonwoven filter fabric complying with the following properties:

1. System Thickness (ASTM D-1777) ≥ 0.38 in
2. Flow (Hydraulic gradinent = 1) (ASTM D4716); 21 gal/min/ ft^2
3. Compressive strength (ASTM D-1621) ≥ 15,000 lb/ft^2
4. Fabric:
    a. Flow (ASTM D-4491): 140 $gal/min/ft^2$
    b. Puncture (ASTM-D6241) ≥ 250 lbs.
    c. Grab Tensile (ASTM D-4632) ≥ 90 lbs.
    d. AOS: 70 U.S. Sieve (0.212 mm)

PK-ESCR 946.2.1. REFERENCES

A. American Society of Testing and Materials (ASTM):

1. ASTM D 1777 Standard Test Method for Thickness of Textile Materials
2. ASTM D 4491 Standard Test Methods for Water Permeability of Geotextiles by Permittivity
3. ASTM D 4632 Standard Test Method for Grab Breaking Load and Elongation of Geotextiles
4. ASTM D 4716 Standard Test Method for Determining the (In-plane) Flow Rate per Unit Width and Hydraulic Transmissivity of a Geosynthetic Using a Constant Head
5. ASTM D 6241 Standard Test Method for Static Puncture Strength of Geotextiles and Geotextile-Related Products Using a 50-mm Probe

PK-ESCR 946.2.2. SUBMITTALS

A. Product data: Manufacturer's product data; indicate product supplied. Provide complete installation instructions proposed for use.

B. No Geocomposite Drainage Board shall be delivered until the approval of test repots by the Engineer, but such approval does not constitute acceptance. The Engineer reserves the right to reject, on or after delivery, any material which does not, in their opinion, meet these specifications.

PK-ESCR 946.2.3. DELIVERY, STORAGE, AND HANDLING

A. Packing and shipping: Provide materials in original unopened containers with manufacturer's labels intact and legible.

B. Acceptance at site:

1. Unload materials: check for damage.
2. Check the geocomposite drainage board upon delivery to ensure that the proper material `has been received.
3. Damaged materials determined by visual inspection will not be accepted.
4. Remove rejected materials from site immediately.

C. Storage and protection:

1. Protect the geocomposite drainage board during shipment and storage at the construction site from temperatures greater than 160° F, mud, dirt, debris, and any other environmental condition that may damage the material’s physical property values.
2. Store materials in dry area in manufacturer's protective packaging in original containers with labels and installation instructions intact.
3. Store materials under cover, off ground; protect from sunlight.
4. Do not expose to aromatic hydrocarbons.

D. The geocomposite drain board will be rejected at the time of installation if it has defects, tears, punctures, flaws, deterioration, or damage incurred during manufacture, shipment, or storage. Remove or repair torn or punctured sections as directed by the Engineer.

E. Replace any geocomposite drain board damaged during manufacture, shipment, or storage at no additional cost to the Owner.

PK-ESCR 946.3. METHODS

A. Sequencing and Scheduling: Schedule installation just prior to installation of soil backfilling operations.

B. Install the geocomposite drainage board in accordance with the plans and specifications.

C. If at any time the Engineer determines that the method of installation does not produce a satisfactory wall drainage system, alter either the method and/or equipment as necessary to comply with the Engineer’s direction.

D. Vertical (Wall) Installation: Ensure that the surface that the geocomposite drainage board will be placed against is cleaned by removing all soil, debris, and irregularities that will prevent intimate contact between the surface and the geocomposite drain. Place the drainage core against the wall with the geotextile fabric side of the board facing the soil. Secure the geocomposite drainage board to the wall using metal stick clips, adhesives, or as recommended by the manufacturer. Install the geocomposite wall drain to allow weep holes, as shown in the plans, to drain water from the drainage core and to underdrain pipes.

E. Horizontal (Deck) Installation: Ensure that the surface that the geocomposite drainage board will be placed against is cleaned by removing all soil, debris, and irregularities that will prevent intimate contact between the surface and the geocomposite drain. Place the

drainage core against the horizontal deck surface with the geotextile fabric side of the board facing the up. Secure the geocomposite drainage board to the deck using metal stick clips, adhesives, or as recommended by the manufacturer. Install the geocomposite to allow deck drains, as shown in the plans, to drain water from the drainage core.

F. Form all joints by peeling or trimming the geotextile off the attached section to expose 3 inches of the drainage core. Overlap the drainage core of the second section over the first drainage core by 2 inches. Cover the joint by reattaching the geotextile flap and securely fastening it to the lower geotextile by means of a continuous strip of 3 inch wide waterproof plastic tape. Ensure that each overlapping course is shingled in the direction of water flow. If joints cannot be formed by interlocking the drainage grooves, then butt the drainage core together and cover with continuous, 6 inch wide geotextile. Center the geotextile fabric over the joint and securely fasten to the two geocomposite drainage board sheets with 3 inch wide waterproof plastic tape.

G. Ensure that the nonwoven geotextile used to repair or replace damaged drainage core jacket material or used to cover joints in the geocomposite wall drain or to overlap the edges of the geocomposite wall drain shall meet the same criteria as the geotextile fabric specified for the geocomposite drainage board assembly.

H. Cover all exposed edges of the geocomposite drainage board with geotextile by tucking and securing a minimum of 4 inches of geotextile behind the drainage core. This may be done by using the geotextile flaps at the edges or using a 12 inch wide continuous strip in the same manner, taping it to the exposed fabric 4 inches in from the edge with a continuous strip of 3 inch wide waterproof plastic tape, and folding the remaining geotextile and tucking it behind the drainage core edge.

I. If the geotextile is torn, perforated, or ripped during installation, patch or replace as directed by the Engineer. Cut out the damaged section and replace it completely or repair it by placing a piece of geotextile over the damaged area and providing a minimum of 4 inches of overlap on all sides over the damaged area and secure the repair patch with 3 inch wide waterproof plastic tape. Discard and replace damaged drainage core sections. Replace or repair any geocomposite drainage board damaged during installation at no additional cost to the Owner.

J. Place the underdrain pipes and free draining aggregate or drainage layer material as shown in the plans or as directed by the Engineer. Provide and maintain a positive outlet for the water in the geocomposite wall drain at all locations. Ensure that weep holes or deck drains are not sealed or made ineffective by the geocomposite drainage board material.

K. Place backfill immediately over the geocomposite drainage board in a manner that does not crush or damage the geocomposite drainage board function. Take care to avoid excessive settlement of the backfill material. Do not expose the geocomposite drainage board for more than 7 days prior to backfilling. Replace and repair any geocomposite drainage board component that is damaged during the backfilling operation as directed by the Engineer.

PK-ESCR 946.4. MEASUREMENT

A. The quantity of GEOCOMPOSITE DRAINAGE BOARD to be paid for shall be the square feet furnished in accordance with the plans and specifications, to the satisfaction of the Engineer.

PK-ESCR 946.5. PRICES TO COVER

A. The contact prices per square foot (SF) for

Item No. PK-ESCR 946 GEOCOMPOSITE DRAINAGE BOARD

shall cover the cost of all labor, materials, equipment, and incidentals required furnish and install the geocomposite drainage board to the satisfaction of the Engineer.

Payment will be made under:

Item No.	Item	Pay Unit
PK-ESCR 946	**GEOCOMPOSITE DRAINAGE BOARD**	**SF**

END OF SECTION

SECTION PK-ESCR 949 – SITE PROTECTION FOR GOUVERNEUR GARDENS

PK-ESCR 950.1. DESCRIPTION

A. Under this Item, the Contractor shall provide temporary SITE PROTECTION FOR GOUVERNEUR GARDENS property in accordance with the Drawings and specifications, to the satisfaction of the Engineer.

PK-ESCR 950.2. MATERIALS

A. Chain-Link Fencing: Minimum 2-inch, 0.148-inch thick, galvanized-steel, chain-link fabric fencing; minimum 4 feet high with galvanized-steel pipe posts; minimum 2-3/8-inch- OD line posts and 2-7/8-inch- OD corner and pull posts, with 1-5/8-inch- OD top rails with galvanized bottom tension wire.

B. Portable Chain-Link Fencing: Minimum 2-inch 0.148-inch- thick, galvanized-steel, chain-link fabric fencing; minimum 4 feet high with galvanized-steel pipe posts; minimum 2-3/8-inch- OD line posts and 2-7/8-inch- OD corner and pull posts, with 1-5/8-inch- OD top and bottom rails. Provide concrete or galvanized-steel bases for supporting posts.

C. Fencing Windscreen Privacy Screen: Polyester fabric scrim with grommets for attachment to chain-link fence, sized to height of fence, in color selected by Engineer from manufacturer's standard colors.

D. Wood Enclosure Fence: Plywood, 4 feet high, framed with four 2-by-4-inch rails, with wood posts spaced not more than 8 feet apart.

E. Polyethylene Sheet: Reinforced, fire-resistive sheet, 10-mil minimum thickness, with flame-spread rating of 15 or less in accordance with ASTM E84 and passing NFPA 701 Test Method 2.

PK-ESCR 950.2.1. COORDINATION, SEQUENCING AND SCHEDULING.

A. Install site protection prior to the start of demolition or removals work.

PK-ESCR 951.3. METHODS

A. General: Protection of Existing Facilities: Protect existing equipment, curbs, walls, structures, utilities, fencing, pavements, site furnishings, and other improvements at Project site and on adjacent properties, except those indicated to be removed or altered, as shown on the Drawings and to the satisfaction of the Engineer.

1. Repair damage to existing facilities to remain.
2. Where access to adjacent properties is required in order to affect protection of existing facilities, obtain written permission from adjacent property owner to access property for that purpose.
3. Tree and Plant Protection: Comply with requirements specified in “Tree and Plant Protection," and bid items “Temporary Wood Tree Guard” and “Temporary Wood Tree Guard for Groves”.
4. Operation, Termination, and Removal:
    a. Maintenance: Maintain facilities in good operating condition until removal.
    b. Maintain site protection devices as required throughout construction

period.

c. Relocate and reestablish site protection as required to maintain resident access to and from the building and other site areas and as directed by the Engineer.
d. Temporary Facility Changeover: Do not change over from using protection facilities to permanent facilities until Substantial Completion.
e. Termination and Removal: Remove each temporary facility when need for its service has ended or no later than Substantial Completion. Complete or, if necessary, restore permanent construction that may have been delayed because of interference with temporary facility. Repair damaged Work, clean exposed surfaces, and replace construction that cannot be satisfactorily repaired.
f. Materials and facilities that constitute site protection are property of Contractor.
g. At Substantial Completion, repair, renovate, and clean protected site features as directed by the Engineer.

B. Gouverneur Gardens Property Area: Protect the Building, including building walls, windows, doors, lights, intake and exhaust vents and adjacent building utilities not designated to be removed, access ramps, railings, guard rails, signage, site walls, curbs, pavements and other site furnishings and features as indicated on the Drawings and to the satisfaction of the Engineer.

PK-ESCR 951.4. MEASUREMENT

A. PER LUMP SUM

Payment for Site Protection will be made on a Lump Sum basis for work satisfactorily completed. Monthly payments will be made in proportion to the amount of work done as determined by the Engineer.

PK-ESCR 951.5. PRICES TO COVER

A. The Lump Sum (LS) contract price for

Item No. PK-ESCR 949 SITE PROTECTION FOR GOUVERNEUR GARDENS

shall cover the cost of all labor, materials, equipment, insurance, and incidentals required to furnish, maintain, remove and complete the work, together with all other work in connection therewith and incidental thereto, in full compliance with the Contract Drawings, the specifications and the directions of the Engineer. Bid Items for “Temporary Wood Tree Guard” and “Temporary Wood Tree Guard for Groves” shall be paid for separately. Bid Item for Construction Fence shall be paid for separately.

Payment will be made under:

Item No.	Item	Pay Unit
PK-ESCR 949	**SITE PROTECTION FOR GOUVERNEUR GARDENS**	**Lump Sum**

END OF SECTION

SECTION PK-ESCR 950 – SITE PROTECTION FOR PARK AREAS

PK-ESCR 950.1. DESCRIPTION

A. Under this Item, the Contractor shall provide temporary SITE PROTECTION FOR PARK AREAS at designated park areas in accordance with the Drawings and specifications, to the satisfaction of the Engineer.

PK-ESCR 950.2. MATERIALS

A. Chain-Link Fencing: Minimum 2-inch, 0.148-inch thick, galvanized-steel, chain-link fabric fencing; minimum 4 feet high with galvanized-steel pipe posts; minimum 2-3/8-inch- OD line posts and 2-7/8-inch- OD corner and pull posts, with 1-5/8-inch- OD top rails with galvanized bottom tension wire.

B. Portable Chain-Link Fencing: Minimum 2-inch 0.148-inch- thick, galvanized-steel, chain-link fabric fencing; minimum 4 feet high with galvanized-steel pipe posts; minimum 2-3/8-inch- OD line posts and 2-7/8-inch- OD corner and pull posts, with 1-5/8-inch- OD top and bottom rails. Provide concrete or galvanized-steel bases for supporting posts.

C. Fencing Windscreen Privacy Screen: Polyester fabric scrim with grommets for attachment to chain-link fence, sized to height of fence, in color selected by Engineer from manufacturer's standard colors.

D. Wood Enclosure Fence: Plywood, 4 feet high, framed with four 2-by-4-inch rails, with wood posts spaced not more than 8 feet apart.

E. Polyethylene Sheet: Reinforced, fire-resistive sheet, 10-mil minimum thickness, with flame-spread rating of 15 or less in accordance with ASTM E84 and passing NFPA 701 Test Method 2.

PK-ESCR 950.2.1. COORDINATION, SEQUENCING AND SCHEDULING.

A. Install site protection prior to the start of demolition or removals work.

PK-ESCR 951.3. METHODS

A. General: Protection of Existing Facilities: Protect existing equipment, curbs, walls, structures, utilities, fencing, pavements, site furnishings, and other improvements at Project site and on adjacent properties, except those indicated to be removed or altered, as shown on the Drawings and to the satisfaction of the Engineer.

1. Repair damage to existing facilities to remain.
2. Where access to adjacent properties is required in order to affect protection of existing facilities, obtain written permission from adjacent property owner to access property for that purpose.
3. Tree and Plant Protection: Comply with requirements specified in “Tree and Plant Protection," and bid items “Temporary Wood Tree Guard” and “Temporary Wood Tree Guard for Groves”.
4. Operation, Termination, and Removal:
    i. Maintenance: Maintain facilities in good operating condition until removal.
    ii. Maintain site protection devices as required throughout construction period.
    iii. Temporary Facility Changeover: Do not change over from using protection

facilities to permanent facilities until Substantial Completion.

iv. Termination and Removal: Remove each temporary facility when need for its service has ended or no later than Substantial Completion. Complete or, if necessary, restore permanent construction that may have been delayed because of interference with temporary facility. Repair damaged Work, clean exposed surfaces, and replace construction that cannot be satisfactorily repaired.

v. Materials and facilities that constitute site protection are property of Contractor.

vi. At Substantial Completion, repair, renovate, and clean protected site features as directed by the Engineer.

B. East River Park: Protect work of the Pier 42 project being completed under a separate contract, the Fire Boat House, the Williamsburg Bridge Piers, the 6th Street Bridge Structure, including pavements, fencing and supporting elements, the existing Jersey barrier and fence along the FDR Drive, and other site furnishings and features as indicated on the Drawings and to the satisfaction of the Engineer. Relocate and reestablish site protection as directed by the Engineer to maintain construction access to the Pier 42 project area for the Pier 42 project contractor.

C. Corlears Hook Park: Protect existing soccer field and soccer field fencing, dog run and dog run fencing and other site furnishings and features as indicated on the Drawings and to the satisfaction of the Engineer.

PK-ESCR 951.4. MEASUREMENT

A. PER LUMP SUM

Payment for Site Protection will be made on a Lump Sum basis for work satisfactorily completed. Monthly payments will be made in proportion to the amount of work done as determined by the Engineer.

PK-ESCR 951.5. PRICES TO COVER

A. The Lump Sum (LS) contract price for

Item No. PK-ESCR 950 SITE PROTECTION EAST RIVER PARK

Item No. PK-ESCR 950 D SITE PROTECTION CORLEARS HOOK PARK

shall cover the cost of all labor, materials, equipment, insurance, and incidentals required to furnish, maintain, remove and complete the work, together with all other work in connection therewith and incidental thereto, in full compliance with the Contract Drawings, the specifications and the directions of the Engineer. Bid Items for “Temporary Wood Tree Guard” and “Temporary Wood Tree Guard for Groves” shall be paid for separately. Bid Item for Construction Fence shall be paid for separately.

Payment will be made under:

Item No.	Item	Pay Unit
PK-ESCR 950	**SITE PROTECTION EAST RIVER PARK**	**Lump Sum**
PK-ESCR 950 D	**SITE PROTECTION CORLEARS HOOK PARK**	**Lump Sum**

END OF SECTION

SECTION PK-ESCR 951 – COMPOST TEA

PK-ESCR 951.1. DESCRIPTION

A. Under this Item, the Contractor shall complete soil and compost tea testing, furnish and apply COMPOST TEA in four (4) separate applications at lawn areas, planting beds and pits, in accordance with the plans and specifications, to the satisfaction of the Engineer.

PK-ESCR 951.2. MATERIALS

A. Compost Tea: A concentrated organic liquid fertilizer that is made from steeping biologically active compost in aerated water. Compost Tea shall meet the following minimum standard as demonstrated by testing:

Criteria	Test Method	Minimum Levels per milliliter of compost Tea
Biological Organisms	Soil FoodWeb Analysis	10-150 µg active bacteria 150-300 µg total bacteria 2-0 µg active fungi 5-20 µg total fungi 1,000 flagellates 1,000 amoeba 20-50 ciliates 2-10 beneficial nematodes

B. Adjust Compost Tea ingredients as recommended by the Testing Laboratory to achieve biological levels required as determined by Soil Biological Testing.

PK-ESCR 951.2.2. SUBMITTALS

A. Qualification Data:

1. Compost Tea Producer/Applicator, including:
    a. List of previous projects including project name, a contact name, phone number, and the number of square feet or acre per each application and a brief description of the project.
    b. Location where the compost tea will be produced.
2. Soil Biological Testing Laboratory: Name and address of testing laboratory, including the resume of the staff anticipated to perform tests and make recommendations for the project.

B. Material Test Reports:

1. General: Submit written reports of each soil sample tested. Each report shall include the following as a minimum and such other information required specific to material tested:
    a. Date issued.
    b. Project Title, name of Contractor.
    c. Testing laboratory name, address and telephone number, and name(s), as

applicable, of each field and/or laboratory inspector.

d. Date, place, and time of sampling or test, with record of temperature and weather conditions.

e. Location of material source.

f. Name and protocol of test performed.

(1) Soil Biological Test Reports: Results of tests including identification of deviations from specified ranges.

(2) Compost Tea Test Reports: Results of tests including identification of deviations from specified ranges.

2. Missing information, failure to use the specified testing protocol, or failure to supply a material sample as specified with the test report shall be grounds for rejection.

3. Lab test reports submitted for approval by the Engineer shall be dated no more than three weeks from date of sample collection.

4. Contractor to bear responsibility for all costs associated with laboratory testing.

5. Soil Biological Test Reports: Test for the following:

Criteria	Test Method	Acceptable Range
Biological Organisms	Soil FoodWeb Analysis	Organism Biomass Data: Dry weight: 0.45 to 0.85 Active Fungi: > 30.0 µg/g Total Fungi: >300.00 µg/g Hyphal Diameter: > 2.50 µg/m Active Bacteria: > 30.0 µg/g Total Bacteria: > 300.00 µg/g Organism Biomass Ratios: AF:TB 1.00 to 2.00 AF:TF > 0.10 AB:TB > 0.10 AF:AB 1.00 to 2.00 Protozoa (Protists): # Flagellates: >10,000/g # Amoebae: >10,000/g # Ciliates: < 470 Nematodes: # Nematodes: >10.00/g # Bacterial: > 4.0 # Fungal: > 4.0 # Fungal/Root: < 1.0 # Predatory: > 2.0 # Root: < 1.0 Mycorrhizal Fungi Endo % > 10 Ecto % > 10 Ericoid % > 10

a. Include written recommendations from soil biological testing lab for compost tea brewing and applications to achieve recommended levels of biological organisms for lawn area, planting bed, and plant pit soils.

6. Compost Tea Test Reports: Test for the following:

Criteria	Test Method	Test results per milliliter of compost Tea
Biological Organisms	Soil FoodWeb Analysis	µg active bacteria µg total bacteria µg active fungi µg total fungi # flagellates # amoeba # ciliates # beneficial nematodes

PK-ESCR 951.2.3. DELIVERY, STORAGE, AND HANDLING

A. Bulk Materials: Deliver compost materials in containers showing volume, name and address of manufacturer, and compliance with state and Federal laws if applicable.

1. Accompany each delivery of compost tea with delivery tickets.
2. When compost is stored on the job site, it shall be done as directed by the Engineer.

B. Weather Limitations: Proceed with compost tea installation only when existing and forecasted weather conditions permit application to the soil when beneficial and optimum results may be obtained. Apply products during favorable weather conditions according to manufacturer's written instructions.

1. Do not apply compost tea during windy or rainy conditions.

PK-ESCR 951.2.4. COMPOST TEA PRODUCERS/APPLICATORS

A. Subject to meeting the requirements, the Compost Tea applications can be performed with approved materials from the following producers/applicators:

1. Kelco Construction, Hauppauge, NY (631) 462-2952
2. Almstead Tree Company, New Rochelle, NY 10801, (914) 576-0193
3. Alternative Earthcare, Bay Shore, NY 11706, (631) 862-5281
4. Ecological Landscape Management, Smithtown, NY 11787, (631) 484-1979
5. Organic Solutions Inc., Port Washington, NY (516) 883-6660

PK-ESCR 951.2.5. QUALITY ASSURANCE.

A. Soil Biological and Compost Tea Testing Laboratory: An independent soil testing laboratory with the experience and capability to conduct the testing indicated and that specializes in types of tests to be performed and capable of making soil recommendations, and issuing reports as specified herein, including the ability to make recommendations about soil blending ratios and methods, amendment recommendations, and issuing

reports as specified herein.

1. Verify Testing Laboratories have the experience and capability to conduct the testing indicated and that specializes in types of tests to be performed and capable of making soil recommendations, and issuing reports as specified herein.
2. Soil Biological Testing Laboratories: Subject to meeting the requirements, the following are acceptable horticultural testing laboratories:
    a. Soil Food Web New York, Center Moriches, NY 11716, (631) 750-1553
    b. Harrington Organics, Bloomfield, CT 06021, (800) 675-8733
    c. Foothill Biological Soil Health Services, Grass Valley, CA 95945, (530) 648-0694
    d. Earthfort, Corvallis, OR 97333, (541) 257,2612

B. Soil Biological Testing: As indicated in “Methods” of this specification.

C. Compost Testing Frequency: One (1) test per each 500 gallons of compost tea utilized.

PK-ESCR 951.2.6. COORDINATION, SEQUENCING AND SCHEDULING.

A. General: Coordinate the collection of soil samples well in advance of compost tea production and applications so as to be able to make applications in accordance with the require seasons.

B. Estimated Soil Biological and Compost Tea Testing Durations: The following soil testing durations are provided as a guide for the contractor to be able to bid the project based on a realistic schedule. Actual testing durations may vary depending upon the contractors’ ability to send materials to their approved testing lab, the testing labs’ ability to complete multiple testing protocols simultaneously, the testing lab’s ability to manage high seasonal demands for soil testing, and the ability of the contractor to deliver test reports as required.

1. Biological testing of soils and compost teas is estimated to take 10-14 business days.

PK-ESCR 951.3. METHODS

A. Prior to application of compost tea, take soil samples in a manner directed by the testing lab from representative lawn, planting bed and tree pit areas for biological analysis.

1. Sample Lawn Areas at six (6) tests per ten (10) acres where compost tea will be applied.
2. Sample planting beds at six (6) tests per ten (10) acres where compost tea will be applied.
3. Sample six (6) tree planting pits where compost tea will be applied.

B. Produce a compost tea in accordance with the recommendations of the biological testing laboratory based on soil biological testing.

C. Make four (4) separate applications of compost tea by spray methods to lawn areas, planting beds and planting pits a minimum rate of 25 gallons of compost tea concentrate per acre of surface area 0.57 gallons per 1,000 square feet. Compost tea may be diluted with water in a 4:1 ratio of four (4) parts water to one (1) part compost tea concentrate to facilitate application.

1. Springtime Applications: Apply compost tea over planting beds, tree pits and lawn areas two (2) times no closer than three weeks between applications between May 1 and June 30
2. Fall Applications: Apply compost tea over lawn areas, planting beds, and pits two (2) times no closer than three weeks between applications between September 1 and October 31.

D. Lawn Areas: Apply Compost Tea by spraying on the surface of lawn areas. Spray applications shall make use of low-ground pressure tractor equipment equipped with boom sprayers. After compost tea application, immediately water the compost tea into the lawn using the automatic irrigation system.

E. Planting Beds and Pits: Apply compost by ground injection method at a spacing of twenty four (24) inches on center at a depth of six (6) to eight (8) inches.

PK-ESCR 951.3. MEASUREMENT

A. The quantity of COMPOST TEA to be paid for shall be paid by acre sprayed on lawns, shrubs or perennials in accordance with the plans and specifications, to the satisfaction of the Engineer. The Compost Tea shall be measured as delivered in bulk containers at point of delivery and as documented by delivery tickets.

PK-ESCR 951.4. PRICES TO COVER

A. The contact prices per acre

Item No. PK-ESCR 951 A COMPOST TEA – SHRUBS AND PERENNIALS

covers the cost of all labor, materials, equipment, insurance, testing and incidentals required furnish and make multiple spray applications of COMPOST TEA at shrubs and perennials to the satisfaction of the Engineer. Payment for each of the four applications shall be made at a rate of 25% of the total unit price per acre.

B. The contact prices per acre

Item No. PK-ESCR 951 B COMPOST TEA – LAWN

covers the cost of all labor, materials, equipment, insurance, testing and incidentals required furnish and make ground injection applications of COMPOST TEA at lawns to the satisfaction of the Engineer. Payment for each of the four applications shall be made at a rate of 25% of the total unit price per acre.

Payment will be made under:

Item No.	Item	Pay Unit
PK-ESCR 951 A	**COMPOST TEA – SHRUBS & PERENNIALS**	**Acre**
PK-ESCR 951 B	**COMPOST TEA – LAWN**	**Acre**

END OF SECTION

SECTION PK-ESCR 961 – BIKEWAY SYMBOLS IMPRINTED INTO CONCRETE

PK-ESCR 961.1 WORK: Under this Item, the Contractor shall install **BIKEWAY SYMBOLS IMPRINTED INTO CONCRETE**, using precast imprinted concrete, in accordance with the Contract Drawings and as directed by the Engineer.

PK-ESCR 961.2 MATERIALS:

All materials shall be as described under Section 4.13 of the New York City Department of Transportation Standard Highway Specifications with the following additions.

Imprinted Concrete Block: The imprinted concrete symbols must be fabricated in a 3' length x 2' width x 4" thick concrete block, with 4x4-W2.9xW2.9 welded wire fabric with 2" cover, installed to match the proposed adjacent sidewalk concrete paving. Use imprinting tools capable of imprinting the surface of the concrete with a uniform and aligned pattern and/or texture. Use a clear release agent as specified by the imprinting tool manufacturer. These materials must be approved by the Engineer prior to their use. Tinting to match the adjacent concrete sidewalk.

Mortar Layer: A 1" layer of cement mortar must be applied to the surface of the subbase before laying the Imprinted Concrete Block, for leveling.

PK-ESCR 961.3 INSTALLATION: Screed the top surface of the concrete block and apply release agent. Using methods as recommended by the manufacturer, apply pre-approved imprinting tools to the surface while the concrete is still plastic. The precast concrete may be cast upside down with a formliner as directed by the Engineer. The requirement for a lightly broomed surface is waived.

For ADA compliance, concrete stamps must not be more than ¼" deep.

PK-ESCR 961.4 SUBMITTALS:

The Contractor must provide a sample block to the Engineer for approval prior to installation. As many sample blocks must be constructed as are necessary to produce sample blocks that meet the approval of the Engineer. The permanent work must be consistent with the appearance of the approved sample block(s) as determined by the Engineer.

PK-ESCR 961.5 MEASUREMENT AND PAYMENT: For each Bikeway Symbols Imprinted into Concrete installed in accordance with the plans, specifications, and direction of the Engineer, the Contractor shall receive the unit price bid.

The price bid shall be a unit price for **EACH** Bikeway Symbols Imprinted into Concrete and shall include the cost of all labor, materials, and equipment and incidentals, in accordance with the plans and specifications, to the satisfaction of the Engineer.

Item No.	Item	Pay Unit
PK-ESCR 961	BIKEWAY SYMBOLS IMPRINTED INTO CONCRETE	EA

END OF SECTION

SECTION PK-ESCR 966 – POROUS GRASS PAVER

PK-ESCR 966.1. INTENT

The work shall consist of furnishing and installing a grass paver system on structural topsoil material with a grass surface.

PK-ESCR 966.3. MATERIALS

A. Contractor shall submit the following:

a. Grass Paver Unit: Fifty (50) percent recycled materials of either polyethylene or high impact polypropylene.

i. Color: Ranges from dark shades of gray to black.
ii. Color Uniformity: Uniform color throughout all units in AL-82 pallet.
iii. Chemical Resistance: Superior
iv. Carbon Black for Ultraviolet Light Stabilization: 1.5 to 2.0 percent
v. Unit Minimum Crush Strength at 70 degrees F: 420 psi.
vi. Flexural Modulus at 73 degrees F: 35,000 psi.

b. Base Course: Base course to conform to Section PK-ESCR 748 – Foundation Material for Concrete.

c. Unit Fill Soil: Clean sharp sand (washed concrete sand). Choose one of the following:

i. Sharp, washed sand with 100 percent passing No. 16 (1.18-mm) sieve.
ii. Coarse, well-draining sand, such as washed concrete sand conforming to AASHTO M6 or ASTM C-33.

d. Filter Fabric: Filter Fabric shall comply with the requirements of item number PK-ESCR 149.

e. Topsoil: Topsoil shall comply with the requirements of item number PK-ESCR 937 C.

f. Grass: Grass sod shall comply with the requirements of Specification Section PK-ESCR 109.

PK-ESCR 966.3.2. SUBMITTALS

A. Contractor shall submit the following:

a. Product Data: Submit manufacturer’s product data.

b. Certificates: Product certificates by the manufacturer certifying material compliance to make pavement system units.

c. Samples: Contractor to provide samples for each material listed above.

B. Mockups:

a. Build mockups to set quality standard for fabrication and installation. The Contractor shall provide mockups of 5’ by 5’ areas. Approved mockups may become part of the completed work if undisturbed at time of substantial completion.

PK-ESCR 966.3.3. QUALITY CONTROL

A. The Contractor shall provide documentation for the following:

a. Installer Qualifications: A firm with a minimum of 5 years documented experience in the installation of porous grass pavers, similar to the complexity of the design indicated in this project and with a record of successful performance. Include lists of completed projects with project names and addresses, names and addresses of architects and owners, and other information specified.

PK-ESCR 966.3.4. DELIVERY, STORAGE, AND HANDLING

A. Materials shall be delivered to the site in manufacturer's original, unopened containers and packaging, with labels clearly identifying product name and manufacturer. Materials shall be stored in accordance with manufacturer's instructions and protected during handling and installation to prevent damage.

PK-ESCR 966.3.5. WARRANTY

A. Warranty Information:

a. Products will be free from defects in material and/or workmanship for a period of five (5) years from the date of substantial completion.

b. The warranty may exclude damage resulting from accident, misuse, tampering, negligence, or abuse.

c. Products shall be repaired or replaced to the satisfaction of the Engineer any items found defective upon inspection by an authorized manufacturer service representative and Engineer.

PK-ESCR 966.3.6. MANUFACTURER AND PRODUCTS

B. Acceptable Manufacturer of porous pavement systems shall be as follows:

a. Alcoa Geosystems (Presto Products Co.), Model No. Geoblock 5150 Grass Pavers, 670 N. Perkins St. P. 0. Box 2399; Appleton, WI 54912-2399, Toll Free Tel: 800-548-3424; Tel: 920-738-1328; Fax: 920-738-1222.

b. Invisible Structure Inc., Model No. Grasspave 2-2520, 1600·Jackson St Suite 310, Golden, Colorado 80401, Tel: 800-233-1510. Website: www.invisiblestructures.com, Email: sales@invisiblestructures.com

c. Site Fabric Inc, Tufftrack Pavers No. TT-24, Site Supply Inc., 713 Stimmel Rd, Columbus, Ohio 43223, Tel. 800-465-0900

d. Or approved equal

PK-ESCR 966.4. METHODS

A. EXAMINATION: Installer shall examine surfaces to receive pavers and conditions. Notify the Engineer if site conditions are not acceptable. Do not begin preparation or installation until acceptable conditions have been corrected.

B. PREPARATION:

a. Subgrade:

i. Excavate area allowing for unit thickness and the structural topsoil foundation material depth.
ii. Provide adequate drainage from excavated area if area has potential to collect water, when working with in-place soils that have poor permeability.
iii. Ensure in-place soil is relatively dry, non-frozen and free from standing water.
iv. Uniformly grade subgrade.
v. Level and clear subgrade of large objects, such as rocks and pieces of wood.

b. Base Preparation:

i. Place six inch (6") thick Structural Topsoil material on geotextile fabric.
ii. Compact structural topsoil to a 90% compaction.

c. Pavement System Installation:

i. Install and infill units in accordance with manufacturer's instructions.
ii. Cut units as directed by manufacturer to custom fit contours and around obstructions.
iii. Ensure required traffic load transfer and support.
iv. Prevent units from shifting during installation using permanent metal stakes through holes in units.
v. Finish in accordance with manufacturer's instructions.
vi. Grass: Install grass seed per section PK-ESCR 109 and as recommended by the pavement manufacturer.

PK-ESCR 966.5. MEASUREMENT

The quantity of Porous Grass Pavers to be measured for payment shall be the number of **SQUARE FEET** of pavers installed in accordance with the plans and specifications and to the satisfaction of the Engineer.

PK-ESCR 966.6. PRICES TO COVER

The unit price bid price per **SQUARE FEET** of **POROUS GRASS PAVERS** shall include the cost of all materials, labor, equipment, and incidentals including, but not limited to, grass paver unit, base course, unit fill soil, filter fabric, topsoil, grass and all excavation for sub-grade preparation. All in accordance with the plans, the specifications and the directions of the Engineer.

Payment will be made under:

Item No.	Item	Pay Unit
PK-ESCR 966	POROUS GRASS PAVER	SF

END OF SECTION

SECTION PK-ESCR 968 – TREE SALVAGE

DESCRIPTION OF WORK: The work under this Section includes the removal and salvage of trees within the contract area for NYC Parks and for Nature Exploration elements.

Tree Salvage for Nature Exploration: The work under this Section includes the removal and salvage of trees within the contract area to be delivered to the Contractor's fabricator of Nature Exploration elements including Log Scramble, Tree Round Border, Tree Round Maze, and Tree Round Seat as shown in the contract documents. The trees salvaged for Nature Exploration must be 80-90% *Gleditsia* sp. and 10-20% *Quercus* sp. Salvage trees for Nature Exploration elements will be determined and tagged in the field by the Engineer prior to actual removal date.

Tree Salvage for NYCDPR: The work under this Section includes the removal and salvage of trees within the contract area for NYCDPR use. This will involve cutting trees to specific log lengths, itemizing and handling the logs as described below, and transporting the logs to a NYCDPR facility within the five Boroughs. The Contractor will be required to remove individual trees in a manner that will optimize reuse of each tree for millable lumber. It is the intent of this Section to enable the salvage of as many trees 12" DBH and above as possible for future reuse based on size, species, condition and stem shape. Salvage trees will be determined and tagged in the field by the Engineer prior to actual removal date.

All work shall be performed by skilled persons. All work shall be performed in a professional manner consistent with International Society of Arboriculture (ISA) and the American National Standards for Arboricultural Safety Z133-2012, approved by the American National Standards Institute (ANSI). ANSI Standards A300 and Z133, as well as all Federal OSHA laws and regulations, Federal Highway Administration (FHWA) Manual on Uniform Traffic Control Devices (MUTCD) Part 6 Temporary Traffic Control (TTC) standards are incorporated and are made part of this contract.

TREE CONTRACTOR'S QUALIFICATIONS / EQUIPMENT LIST:

Certification and Experience. The Tree Contractor must provide the following:

a. The Tree Contractor must have at least three (3) years of experience in pruning; removal and disposal of trees, hanging limbs, branches and stumps; and soil decompaction.

b. The Tree Contractor must employ a minimum of one supervisory employee who is an ISA Certified Arborist, or a recognized approved equivalent certification such as New Jersey Certified Tree Expert.

c. The Tree Contractor must prove to the Engineer by transcript or otherwise that they employ a minimum of one supervisory employee in the field at all times with no less than Two (2) years' experience in commercial logging. This supervisor must be capable of overseeing the felling of trees for salvage.

d. At least one employee on each crew working within ten (10) feet of energized conductors must be a qualified line clearance tree trimmer as trained by TCIA Electrical Hazards Awareness Program (EHAP) as evidenced by certificate and/or by the live list of EHAP certificate holders on TCIA's website.

e. The Tree Contractor must submit for approval the names of two (2) references with contact person's phone numbers where the Contractor has provided similar service and performed such work on contracts of comparable size.

Equipment List

1. The Contractor shall possess and make available all tools, equipment and instruments necessary to make repairs and/or upgrades on all required parts and equipment covered under this contract. This shall include, but not be limited to, trucks, air lifts, climbing equipment, chainsaws of various sizes, chippers, stump grinders, portable wire detectors, hand tools, and all equipment and supplies necessary to complete the work as directed by the Engineer. In particular, the contractor shall provide the equipment and staff able to cut, move, stack at height of up to 14 feet, and load sawlogs of up to 8,000 pounds and up to 12 feet in length. Such equipment shall include but not be limited to:

    a. Hand tools
        - PPE (personal protective equipment which includes chaps, hardhat, ear protection, eye protection, gloves, work boots);
        - Loggers tape or 30' tape measure for scaling and measuring logs;
        - Falling wedges, mallet/hammer;
        - Chainsaws with appropriate bar length to fell trees (such as 36" and 42"-length bar on Stihl 660 or Husky 395xp for bigger logs);
        - 3/8" or heavier chain or chokers to move logs as needed;
        - Paint marker such as Sakura Solid Paint Marker for marking cut logs on both ends.
    b. Heavy equipment (one of the following):
        - Full sized skid steer with forks or grapple attachment (such as Bobcat T180 capable of moving full sized logs 5,000-8,000 pound range); OR
        - Excavator that can lift or move logs with minimal damage to bark; OR
        - Front loader with forks capable of moving 5,000-8,000 pound logs.

TREE SALVAGE PREPARATION

In advance of the tree's salvage for Nature Exploration, the Engineer will perform a walkthrough with the Contractor's ISA Certified Arborist to select and tag those trees to be salvaged and delivered to the Contractor's Nature Exploration fabricator.

In advance of the trees' salvage for NYCDPR, The Engineer, in consultation with the NYCDPR Arborist, and the Contractors ISA Certified Arborist will perform a walkthrough to select and tag those trees to be salvaged and delivered to NYCDPR.

The tree removal walkthrough for Nature Exploration must occur in advance of the walkthrough for the NYCDPR salvage walkthrough. The Nature Exploration tree salvage walkthrough may not take place after the walkthrough for the NYC Parks Tree Salvage. At the discretion of the Engineer, these walkthroughs may be joined.

TREE REMOVAL AND SALVAGE METHOD

Each tree shall be designated by the Engineer prior to removal for reuse ("remove and salvage"), and indicated as to log length (8-, 10-, or 12-feet), quantity (one or two) and any specific cutting notations. At each tree location, the Contractor will cut standing trees for sawlogs as specified on tree removal plan. Although salvaged logs will generally be 8-, 10- or 12-feet in length, alternative

lengths may be specified prior to removal. Length and quantity of all log sections depend on the shape and size of the tree and will be designated by the Engineer on a per tree basis.

Length and quality of all log selections for Nature Exploration depend on the shape and size of the tree and the appropriateness for its intended use as shown in the contract drawings and specification **Section PK-ESCR 912 Nature Exploration Fabrication** and **Section PK-ESCR 913 Nature Exploration Installation**.

1. Felling Operation. Contractor shall use removal methods that reduce potential damage to salvaged logs. All shafts shall be cut as close to the root flare as possible, and all log lengths shall be measured from this stump cut upwards. The distance from the ground surface to the first cut at stump level shall be specified for each tree or shall be not more than six (6) inches off the ground. Contractor shall either use ropes to lower salvaged logs to ground or a crane if necessary. In either case, adequate protection shall be used to brace the log fall and maintain the physical integrity of logs specified for reuse. Adequate protection shall include a series of rubber tires or similar objects on ground surface to absorb the force of log impact so as to avoid cracking and splitting and or similar damage to the salvaged log.

2. Sealant Application. Apply clear wax end-sealer Anchor-Seal or approved equal to both cut ends of salvaged logs with a pump sprayer immediately after felling.

3. Labeling and Data Tracking. Contractor will be provided with a data tracking sheet template to be filled in for each log upon felling. The template will include a tree inventory code that corresponds to markings that shall be made on the log ends. Data to be recorded shall include the following information: tree removal date, tree inventory number, species, number of sections in each tree, diameter at both cut ends, and condition prior to and after felling. Codes shall be marked on both cut ends in a manner that codes are clearly visible.

4. Move cut logs to temporary on-site storage area. Maximum safety measures must be used by the Contractor during tree removal. The Contractor shall carefully protect against damage to all existing trees, plants, curbs, sidewalks, utilities, and other features to remain. During tree removal operations, SherrillTree TRI-GUARD SYSTEM, or Engineer approved alternative such as plywood and/or tarps, must be used to protect adjacent vehicles, real property, and pedestrians. If, when removing trees, existing sidewalks or curbs are disturbed, the Contractor shall restore and/or reset disturbed sidewalks and curbs, at no additional cost, to the satisfaction of the Engineer. All repairs should take place within three (3) days of the damage occurring or as directed by the Engineer.

DISPOSITION OF SALVAGED LOGS

1. Log Disposition. NYCDPR Salvaged logs shall be transported by the Contractor using a self-loading log truck to a NYCDPR facility within the five boroughs. , Contractor will document log hauler/trucking company information on manifest including company name and address, name of driver, and company contact information. Each log load will include tracking data on logs contained within as described above. Logs and manifests must be submitted to the Engineer.

2. Log Decking. An on-site log decking area with a minimum of at least 5,000 square feet for stacking logs must be designated in coordination with the Engineer. Areas should be accessible for ease of pickup by truck and should be kept secure and free from obstruction.

    a. Contractor shall deck all logs from salvaged trees in a manner to facilitate truck

loading. Log decking and stacking shall be done so that log inventory codes are visible from one side. Logs should be organized by like species and length. Log stacks shall not exceed 14 feet in height.

3. Salvaged Log Chain of Custody For NYCDPR. The Contractor's custody of the salvaged logs ends at the time of delivery to the NYCDPR facility. At the time of delivery, NYCDPR must sign for logs and copies must be provided to the Engineer, Contractor, and NYCDPR.

4. Salvaged Log Chain of Custody For Nature Exploration. Salvaged Logs for Nature Exploration remain in the Contractor's custody until fabrication and installed on site are completed as per the specification Sections PK-ESCR 912 Nature Exploration Fabrication and PK-ESCR 913 Nature Exploration Installation. The chain of custody must be included with the Nature Exploration delivery paperwork and submitted to the Engineer.

PLANT PEST AND DISEASE CONTROL REQUIREMENTS

Contractors shall comply with Federal and State Department of agriculture regulations for plant pest and disease control. New York State Department of Agriculture and New York State Department of Environmental Conservation regulations require contractors operating in infested areas to thoroughly clean all equipment units before moving equipment to non-infested areas.

QUARANTINE AREAS and ORDERS FOR THE ESTABLISHMENT OF PROTECTIVE ZONE PROVISIONS: The Contractor is required to abide by all existing and any new or revisions to legislation and orders regarding quarantines and protective zones while working on this contract. Full information can be obtained from Federal and State Pest and Disease Control agencies and personnel.

CREW CONFIGURATION

The Tree Contractor shall furnish a list showing each employee's identification number and title (classification). The Contractor shall advise of any and all changes in the Contractor's roster of employees assigned to this contract. A Tree Removal Crew is defined for **tree removal** operations as at least five (5) crew members. One (1) aerial lift operator or climber aloft and engaged in tree cutting with a chainsaw and/or hand saw, two (2) ground workers engaged in assisting worker aloft in lowering limbs, clearing and chipping wood debris in a wood chipper attached to a truck for chip collection and two (2) worksite safety specialists exclusive of tree work operations and engaged in securing a safe work zone and directing vehicular and pedestrians around the active work zones.

MEASUREMENT AND PAYMENT:

This is an incremental cost item. All trees salvaged and paid for under this section will also be paid for removal under Section **PK-ESCR 0-05 – TREE REMOVAL.**

The quantity of **TREE SELECTION, STORAGE AND PREPARATION**, for Nature Exploration shall be a unit price for **EACH** tree between 12" and 36" DBH as specified in the drawings, and shall include the cost of all labor, materials and equipment necessary for salvage of trees with log disposition – delivery to site for Nature Play Fabrication as determined by the Contractor with approval from the Engineer, and all other incidental expenses necessary to complete the work in accordance with the plans and specifications, to the satisfaction of the Engineer.

The quantity of **REMOVE-SALVAGE TREE, ANY CLASS** shall be a unit price for **EACH** tree of the over 12" DBH size group, and shall include the cost of all labor, materials, equipment,

walkthrough and preparation necessary for salvage of trees with log disposition – delivery to NYCDPR as specified by the Engineer, and all other incidental expenses necessary to complete the work in accordance with the plans and specifications, to the satisfaction of the Engineer.

ITEM #	CLASS SIZE	DIAMETER
PK-ESCR 968 A	2	12" to under 18"
PK-ESCR 968 B	3	18" to under 24"
PK-ESCR 968 C	4	24" to under 30"
PK-ESCR 968 D	5	over 30"

All trees marked for salvage shall be measured for their diameter at breast height (DBH), a height of four and a half (4 1/2) feet from the ground. On level surfaces, measurements shall be taken from any face of the tree. On slopes, measurements shall be taken at the highest grade elevation.

The price bid shall be a unit price per **EACH** and shall include the cost of all labor, materials, and equipment required, including transport, on site storage, limbing of trees, pruning, and all incidental expenses necessary to complete the work in accordance with the plans and specifications, to the satisfaction of the engineer.

Tree Removal, Clearing and Grubbing, Nature Exploration Fabrication, and Nature Exploration Installation shall be paid for under its respective contract items .

Payment will be made under:

Item No.	Item	Pay Unit
PK-ESCR 916	**TREE SELECTION, STORAGE AND PREPARATION**	**EA**
PK-ESCR 968 A	**REMOVE-SALVAGE TREE 12-18 CLASS 2**	**EA**
PK-ESCR 968 B	**REMOVE-SALVAGE TREE 18-24 CLASS 3**	**EA**
PK-ESCR 968 C	**REMOVE-SALVAGE TREE 24-30 CLASS 4**	**EA**
PK-ESCR 968 D	**REMOVE-SALVAGE TREE 30+ CLASS 5**	**EA**

END OF SECTION

SECTION PK-10 – BROKEN STONE – LOOSE MEASURE

PK-10.1. **INTENT:** This section describes Broken Stone – Loose Measure

PK-10.2. **DESCRIPTION:** Broken Stone – Loose Measure shall include the furnishing and placement of Broken Stone in the locations where shown on the plans or as directed by the Engineer. This stone will be used for drainage applications and other miscellaneous work, as shown on the details located in Appendix A of the contract drawings(sheet #4 “Parks leaf manhole and catch basin covers”, and as directed by the Engineer.

PK-10.3. **MATERIALS:**

(A) BROKEN STONE — Shall consist solely of crushed ledge rock. Stone shall be No. 3 size and shall be of approved size and quality as specified in the NYCDOT Standard Highway Specifications or as directed by the Engineer.

IMPORTANT: Material substitutions will not be approved under any circumstances. All recycled materials will be rejected.

PK-10.4. **MEASUREMENT AND PAYMENT:**

The quantity of **BROKEN STONE – LOOSE MEASURE** to be paid for under this item shall be the number of **CUBIC YARDS**, measured in trucks as delivered to the site, furnished and place in accordance with the plans, specifications, and directions of the Engineer.

The price bid shall be a unit price per **CUBIC YARD** and shall include the cost of all labor, materials, equipment and incidental expenses necessary to complete the work in accordance with the plans and specifications, to the satisfaction of the Engineer.

Item No.	Item	Pay Unit
PK-10	BROKEN STONE – LOOSE MEASURE	C.Y.

END OF SECTION

SECTION PK-77 – POLYETHYLENE CORRUGATED PIPE – 18" DIA.

PK-77.1. **WORK:** Under this item, the contractor shall furnish and lay Polyethylene Corrugated Pipe of 18" diameter in accordance with the plans, specifications, and directions of the Engineer. All work of connecting and joining to other pipes or drainage structures shall be included under this item.

PK-77.2. **MATERIALS:** Pipe and fittings shall be manufactured by Advanced Drainage systems, Inc. (ADS) Staybrook Industrial Area, Ludlow, MA. 01056, or approved equal. Sizes 4 – 36 inch (-12) shall have a full circular cross-section, with an outer corrugated pipe wall and an essentially smooth inner wall (waterway). Corrugations for these sizes may be either annular or spiral. All sizes shall confirm to the AASHTO classification "Type S" (smooth waterway).

Pipe manufactured for this specification shall comply with the requirements for test methods, dimensions, and markings found in AASHTO Designations M252 and M294. Pipe and fittings shall be made from Virgin PE compounds which conform with the requirements of cell Class 324420C as defined and described in ASTM D3350.

The minimum parallel plate stiffness values when tested in accordance with ASTM D2412 shall be as follows:

Diameter	Pipe Stiffness
18" (450 mm)	40 psi (280 kPa)

The fittings shall not reduce or impair the overall integrity or function of the pipe line. Common corrugated fittings may be either molded or fabricated. Common corrugated fittings include inline joint fittings, such as couplers and reducers, and branch or complimentary assembly fittings such as tees, wyes, and end caps. These fittings may be installed by various methods, such as snap-on, screw-on, bell and spigot, and wrap around. Couplings shall provide sufficient longitudinal strength to preserve pipe alignment and prevent separation at the joints.

Only fittings supplied or recommended by the pipe manufacturers shall be used. Where designated on the plans, a neoprene or rubber gasket shall be supplied.

PK-77.3. **INSTALLATION:** All pipe should be reasonably close to conformity to line and grade and shall have a full, firm and even bearing at each joint and along the entirety length of pipe. Joint misalignment shall not result in offsets, in the interior smooth liner, greater than one-quarter (1/4") inch. Pipe laying shall begin at the downstream end and progress upstream. Any single run of pipe, excluding end sections, shall consist wholly of the same type material unless otherwise directed by the engineer. No section of pipe used shall be less than three feet (3') in length. Installation of the pipe shall be in accordance with ASTM Recommended Practice D2321.

Installation Recommendation:

1. Crushed stone, gravel or compacted soil backfill material should be used as the bedding and envelope material around the culvert. The aggregate size should not exceed one-sixth (1/6) of the pipe diameter or four inch (4") diameter, whichever is smaller.
2. The corrugated pipe should be laid on grade, on a layer of bedding material. If native soil is used as the bedding and backfill material, it should be well compacted in six inch (6") layers under the haunches, around the sides, and above the pipe to the recommended minimum height of cover.

3. Either flexible (asphalt) or rigid (concrete) pavements may be laid as part of the minimum cover requirements.
4. Site conditions and availability of bedding materials often dictate the type of installation method used. See plans.
5. The load bearing capability of flexible conduits is dependent on the type of backfill material used and the degree compaction achieved. Crushed stone and gravel backfill materials typically reach a compaction level of ninety to ninety five percent (90-95%) AASHTO standard density without compaction. When native soils are used as backfill material, a compaction level of eighty five percent (85%) is required. This is the same minimum compaction that is recommended by all culvert pipe manufacturers and can be achieved by either hand or mechanical tamping.

Two types of installations are recommended for H-20 live loads – the heaviest legal highway loads. These are the trench and open ditch installations. The minimum height of cover recommendations are the same for both conditions.

MINIMUM DIMENSIONS TRENCH OR OPEN DITCH INSTALLATIONS			
Nominal Diameter	Min. Thickness of Bedding	Minimum Cover	Minimum Trench Width
18”	6”	12”	39”

Coupling of the pipes shall be performed using standard ADC (Advanced Drainage Systems) N-12 split coupler PRO LINK ST, or PRO LINK 10.8, or PRO LINK 5, or approved equal.

PK-77.4. MEASUREMENT AND PAYMENT:

The quantity of **POLYETHYLENE CORRUGATED PIPE** to be paid for under this item shall be the number of linear feet (laying length), including fittings, measured in its final position, furnished, and placed in accordance with the plans, specifications, and directions of the Engineer.

The price bid shall be a unit price per **LINEAR FOOT** of laying length Polyethylene Corrugated Pipe of each size shown and shall include the cost of all labor, materials and equipment necessary to complete the work in accordance with the plans and specifications, to the satisfaction of the Engineer. Excavation and broken stone shall be paid for under their respective Items.

Item No.	Item	Pay Unit
PK-77	POLYETHYLENE CORRUGATED PIPE – 18” DIA.	L.F.

END OF SECTION

SECTION PK-78 – POLYETHYLENE CORRUGATED PIPE – 24" DIA.

PK-78.1. **WORK:** Under this item, the contractor shall furnish and lay Polyethylene Corrugated Pipe of 24" diameter in accordance with the plans, specifications, and directions of the Engineer. All work of connecting and joining to other pipes or drainage structures shall be included under this item.

PK-78.2. **MATERIALS:** Pipe and fittings shall be manufactured by Advanced Drainage systems, Inc. (ADS) Staybrook Industrial Area, Ludlow, MA. 01056, or approved equal. Sizes 4 – 36 inch (-12) shall have a full circular cross-section, with an outer corrugated pipe wall and an essentially smooth inner wall (waterway). Corrugations for these sizes may be either annular or spiral. All sizes shall confirm to the AASHTO classification "Type S" (smooth waterway).

Pipe manufactured for this specification shall comply with the requirements for test methods, dimensions, and markings found in AASHTO Designations M252 and M294. Pipe and fittings shall be made from Virgin PE compounds which conform with the requirements of cell Class 324420C as defined and described in ASTM D3350.

The minimum parallel plate stiffness values when tested in accordance with ASTM D2412 shall be as follows:

Diameter	Pipe Stiffness
24" (600 mm)	34 psi (235 kPa)

The fittings shall not reduce or impair the overall integrity or function of the pipe line. Common corrugated fittings may be either molded or fabricated. Common corrugated fittings include inline joint fittings, such as couplers and reducers, and branch or complimentary assembly fittings such as tees, wyes, and end caps. These fittings may be installed by various methods, such as snap-on, screw-on, bell and spigot, and wrap around. Couplings shall provide sufficient longitudinal strength to preserve pipe alignment and prevent separation at the joints.

Only fittings supplied or recommended by the pipe manufacturers shall be used. Where designated on the plans, a neoprene or rubber gasket shall be supplied.

PK-78.3. **INSTALLATION:** All pipe should be reasonably close to conformity to line and grade and shall have a full, firm and even bearing at each joint and along the entirety length of pipe. Joint misalignment shall not result in offsets, in the interior smooth liner, greater than one-quarter (1/4") inch. Pipe laying shall begin at the downstream end and progress upstream. Any single run of pipe, excluding end sections, shall consist wholly of the same type material unless otherwise directed by the engineer. No section of pipe used shall be less than three feet (3') in length. Installation of the pipe shall be in accordance with ASTM Recommended Practice D2321.

Installation Recommendation:

1. Crushed stone, gravel or compacted soil backfill material should be used as the bedding and envelope material around the culvert. The aggregate size should not exceed one-sixth (1/6) of the pipe diameter or four inch (4") diameter, whichever is smaller.

2. The corrugated pipe should be laid on grade, on a layer of bedding material. If native soil is used as the bedding and backfill material, it should be well compacted in six inch (6") layers under the haunches, around the sides, and above the pipe to the recommended minimum height of cover.

3. Either flexible (asphalt) or rigid (concrete) pavements may be laid as part of the minimum cover requirements.

4. Site conditions and availability of bedding materials often dictate the type of installation method used. See plans.

5. The load bearing capability of flexible conduits is dependent on the type of backfill material used and the degree compaction achieved. Crushed stone and gravel backfill materials typically reach a compaction level of ninety to ninety five percent (90-95%) AASHTO standard density without compaction. When native soils are used as backfill material, a compaction level of eighty five percent (85%) is required. This is the same minimum compaction that is recommended by all culvert pipe manufacturers and can be achieved by either hand or mechanical tamping.

Two types of installations are recommended for H-20 live loads – the heaviest legal highway loads. These are the trench and open ditch installations. The minimum height of cover recommendations are the same for both conditions.

MINIMUM DIMENSIONS TRENCH OR OPEN DITCH INSTALLATIONS			
Nominal Diameter	Min. Thickness of Bedding	Minimum Cover	Minimum Trench Width
24”	6”	12”	48”

Coupling of the pipes shall be performed using standard ADC (Advanced Drainage Systems) N-12 split coupler PRO LINK ST, or PRO LINK 10.8, or PRO LINK 5, or approved equal.

PK-78.4. MEASUREMENT AND PAYMENT:

The quantity of **POLYETHYLENE CORRUGATED PIPE** to be paid for under this item shall be the number of linear feet (laying length), including fittings, measured in its final position, furnished, and placed in accordance with the plans, specifications, and directions of the Engineer.

The price bid shall be a unit price per **LINEAR FOOT** of laying length Polyethylene Corrugated Pipe of each size shown and shall include the cost of all labor, materials and equipment necessary to complete the work in accordance with the plans and specifications, to the satisfaction of the Engineer. Excavation and broken stone shall be paid for under their respective Items.

Item No.	**Item**	**Pay Unit**
PK-78	**POLYETHYLENE CORRUGATED PIPE – 24” DIA.**	**L.F.**

END OF SECTION

SECTION PK-667 – TEMPORARY SHEETING

PK-667.1. WORK: Under the Item TEMPORARY SHEETING, the Contractor shall provide temporary sheeting and bracing in all trenches or excavations for structures, where necessary for the proper protection of persons or property. Where the depth of excavation exceeds five feet (5'), sheeting and necessary bracing must be installed for the entire depth below the existing ground surface and will be paid for under this item.

All shoring work shall meet or exceed the requirements of the New York State Department of Labor, Industrial Code Rule 2 and Title 29 Code of Federal Regulations Part 1926, Safety and Health Regulations for Construction (OSHA).

The type of sheeting and bracing shall be satisfactory to the Engineer and subject to the Engineer's approval, but the approval by the Engineer of a method to be used does not relieve the Contractor of the Contractor's responsibility for protection and safety.

When sheeting is used in trenches or excavations for structures of less than five (5) feet in depth, the cost of such sheeting and bracing, unless ordered left in place, shall be included in the price bid for Unclassified Excavation, and payment will be made for such excavation to the maximum payment lines shown on the Plans.

PK-667.2. MEASUREMENT AND PAYMENT: The quantity of Temporary Sheeting to be paid for under this item shall be the number of **SQUARE FEET** of sheeting, measured on exposed surfaces after installation in accordance with the plans, specifications and the directions of the Engineer.

The price bid shall be a price per **SQUARE FOOT** and shall include the cost of all labor, material, equipment, and incidental expenses necessary including complete removal prior to backfilling, as necessary, to complete work in accordance with plans and specifications to the satisfaction of the Engineer.

Item No.	Item	Pay Unit
PK-667	TEMPORARY SHEETING	S.F.

END OF SECTION

SECTION PK-668 – PARKS LEAF MANHOLE COVER & FRAME

PK-668.1. **WORK:** Under this item, the Contractor shall furnish and install Manhole Covers along with frames, including locking bolts and keys, as directed by the Engineer.

PK-668.2. **MATERIALS:** Manhole Covers shall be of gray iron per ASTM A48, latest revision, Class 30 or better. Covers shall be manufactured by Campbell Foundry Co., Harrison, NJ, EJ USA, Inc., East Jordan, MI or approved equal. All covers shall be suitable for highway traffic, meeting the requirements for heavy duty H-20 loading, per AASHTO M306-10.

Bolt & Key: Each cover shall be furnished with two (2) locking bolts, similar to the *Intimidator Man-Lock*, as manufactured by McGard, Inc., Orchard Park, N.Y., or approved equal. Two (2) keys shall be furnished per site. For security reasons, keys shall be sent directly from the manufacturer to a location directed by the Engineer.

PK-668.3. **INSTALLATION:** The Covers shall be installed on frames as shown on the Standard Detail Sheet. Immediately prior to the final inspection the Contractor shall clean cover surfaces that show evidence of loose mill scale, non-adherent rust, peeling paint and other deleterious matter in accordance with SP-2, Hand Tool Cleaning, a method generally confined to wire brushing, sandpaper, hand scrapers or hand impact tools. Unless otherwise directed by the Engineer, covers shall be painted with two coats of black silicone alkyd paint, such as Steel Master 9500 manufactured by Sherwin Williams, Woodside, NY or approved equal.

PK-668.4. **CLEANING:** Except otherwise ordered by the Engineer, immediately prior to the final inspection the Contractor shall clean unimbedded surfaces that show evidence of loose mill scale, non-adherent rust, peeling paint and other deleterious matter in accordance with SSPC SP2, Hand Tool Cleaning, a method generally confined to wirebrushing, sandpaper, hand scrapers or hand impact tools.

PK-668.5. **SUBMITTALS:** All submittals shall conform to the requirements in the S-Pages. Foundry Certificates for each type of material certifying ductile iron grade for catch basin covers and H-20 loading test shall be submitted. Submittal shall be on the pattern holder's letterhead.

PK-668.6. **MEASUREMENT AND PAYMENT:**

The quantity of Parks Manhole Covers to be paid for under this item shall be the number of **EACH** type furnished and installed in accordance with the plans, specifications, and directions of the Engineer.

The price bid shall be a unit price for **EACH** Parks Leaf Manhole Cover, furnished and installed, and shall include the cost for all labor, material, equipment, and incidental expenses necessary to complete the work, including frame, locking bolts, painting, and keys, all in accordance with the plans and specifications, to the satisfaction of the Engineer.

Item No.	Item	Pay Unit
PK-668	PARKS LEAF MANHOLE COVER & FRAME	EA

END OF SECTION

SECTION PK-669 – PARKS LEAF CATCH BASIN COVER & FRAME

PK-669.1. **WORK:** Under this item, the Contractor shall furnish and install Catch Basin Covers along with frames, including locking bolts and keys, as directed by the Engineer.

PK-669.2. **MATERIALS:** Catch Basin Covers shall be ductile iron ASTM A-536, latest revision, Grade 65-48-12 or better. Covers shall be manufactured by Campbell Foundry Co., Harrison, NJ, EJ USA, INC., East Jordan, MI or approved equal. All covers shall be suitable for highway traffic, meeting the requirements for heavy duty H-20 loading, per AASHTO M306-10.

Bolt & Key: Each cover shall be furnished with two (2) locking bolts, similar to the *Intimidator Man-Lock*, as manufactured by McGard, Inc., Orchard Park, N.Y., or approved equal. Two (2) keys shall be furnished per site. For security reasons, keys shall be sent directly from the manufacturer to a location directed by the Engineer, and written confirmation must be provided by the manufacturer to the Engineer.

PK-669.3. **INSTALLATION:** The Covers shall be installed on frames as shown on the Standard Detail Sheet. Immediately prior to the final inspection the Contractor shall clean cover surfaces that show evidence of loose mill scale, non-adherent rust, peeling paint and other deleterious matter in accordance with SP-2, Hand Tool Cleaning, a method generally confined to wire brushing, sandpaper, hand scrapers or hand impact tools. Unless otherwise directed by the Engineer, covers shall be painted with two coats of black silicone alkyd paint, such as Steel Master 9500 manufactured by Sherwin Williams, Woodside, NY or approved equal.

PK-669.4. **CLEANING:** Except otherwise ordered by the Engineer, immediately prior to the final inspection the Contractor shall clean unimbedded surfaces that show evidence of loose mill scale, non-adherent rust, peeling paint and other deleterious matter in accordance with SSPC SP2, Hand Tool Cleaning, a method generally confined to wirebrushing, sandpaper, hand scrapers or hand impact tools.

PK-669.5. **SUBMITTALS:** All submittals shall conform to the requirements in the S-Pages. Foundry Certificates for each type of material certifying ductile iron grade for catch basin covers and H-20 loading test shall be submitted. Submittal shall be on the pattern holder's letterhead.

PK-669.6. **MEASUREMENT AND PAYMENT:**

The quantity of Parks Catch Basin Covers to be paid for under this item shall be the number of **EACH** type furnished and installed in accordance with the plans, specifications, and directions of the Engineer.

The price bid shall be a unit price for **EACH** Parks Leaf Catch Basin Cover, furnished and installed, and shall include the cost for all labor, material, equipment, and incidental expenses necessary to complete the work, including frame, locking bolts, painting, and keys, all in accordance with the plans and specifications, to the satisfaction of the Engineer.

Item No.	Item	Pay Unit
PK-669	PARKS LEAF CATCH BASIN COVER & FRAME	EA

END OF SECTION

SECTION PK-685 – DUCTILE IRON SEWER PIPE – 12" DIA.

PK-685.1. **WORK:** Under this item, the Contractor shall furnish and lay **DUCTILE IRON SEWER PIPE** of the inside diameter sizes called for and shown on the plans or as directed by the Engineer.

PK-685.2. **MATERIALS:** Ductile Iron Sewer Pipe shall consist of bell and spigot type Ductile Iron Pipe sections with Field Lock Gasket Joints, smaller or equal to that manufactured by the U.S. Pipe & Foundry Co. of Birmingham, Alabama and shall conform to the American National Standards Institute C151 and American Water Works Association A21.51, Thickness Class 56. Pipe shall be laid true to line and grade when bells upstream.

PK-685.3. **LAYING**: If the foundation is good, firm earth the earth shall be pared or molded to give a full support to the lower third of each pipe. If the foundation is unstable, or other conditions prevent a proper bearing for the pipe, a bedding of broken stone shall be installed as shown on the details located in Appendix A of the contract drawings "Standard Detail Sheet 'Drainage Details-No. 2". If the excavation has been made deeper than necessary, a bedding of broken stone shall be installed at the Contractor's expense.

When the pipe is to be installed under a roadway a concrete cradle shall be laid to provide a full, firm and even bearing as directed by the Engineer.

Trenches shall be promptly backfilled after the installation of pipe or completion of structures but no backfilling shall be done until the work has been inspected and approved by the Engineer.

Trenches shall be backfilled with clean fill, hand placed and tamped with six (6) inch layers to completely fill all spaces adjacent to the pipe.

PK-685.4. **CONNECTIONS:** The Contractor shall do all the work necessary to join the Ductile Iron Sewer Pipe to the existing sewer as shown on the plans. The cost for doing this shall be included in the unit price bid for this item.

PK-685.5. **MEASUREMENT AND PAYMENT:** The quantity of **DUCTILE IRON SEWER PIPE** to be paid for under this item shall be the number of **LINEAR FEET** (laying length) of each size pipe, including fittings, furnished, placed and measured in its final position, in accordance with the plans and specifications and the directions of the Engineer.

The price bid shall be a unit price per **LINEAR FOOT** of laying length of Ductile Iron Sewer Pipe of each size shown and shall include the cost of all labor, materials and equipment necessary to complete the work, including delivering, handling and laying of pipe, connection and fittings, backfilling with clean fill, all in accordance with the plans and specifications to the satisfaction of the Engineer.

Excavation, Concrete and Broken Stone shall be paid separate for under their respective items.

Item No.	Item	Pay Unit
PK-685	DUCTILE IRON SEWER PIPE – 12" DIA.	L.F.

END OF SECTION

SECTION PK-687 – DUCTILE IRON SEWER PIPE – 8" DIA.

PK-687.1. **WORK:** Under this item, the Contractor shall furnish and lay **DUCTILE IRON SEWER PIPE** of the inside diameter sizes called for and shown on the plans or as directed by the Engineer.

PK-687.2. **MATERIALS:** Ductile Iron Sewer Pipe shall consist of bell and spigot type Ductile Iron Pipe sections with Field Lock Gasket Joints, smaller or equal to that manufactured by the U.S. Pipe & Foundry Co. of Birmingham, Alabama and shall conform to the American National Standards Institute C151 and American Water Works Association A21.51, Thickness Class 56. Pipe shall be laid true to line and grade when bells upstream.

PK-687.3. **LAYING**: If the foundation is good, firm earth the earth shall be pared or molded to give a full support to the lower third of each pipe. If the foundation is unstable, or other conditions prevent a proper bearing for the pipe, a bedding of broken stone shall be installed as shown on the details located in Appendix A of the contract drawings "Standard Detail Sheet 'Drainage Details-No. 2". If the excavation has been made deeper than necessary, a bedding of broken stone shall be installed at the Contractor's expense.

When the pipe is to be installed under a roadway a concrete cradle shall be laid to provide a full, firm and even bearing as directed by the Engineer.

Trenches shall be promptly backfilled after the installation of pipe or completion of structures but no backfilling shall be done until the work has been inspected and approved by the Engineer.

Trenches shall be backfilled with clean fill, hand placed and tamped with six (6) inch layers to completely fill all spaces adjacent to the pipe.

PK-687.4. **CONNECTIONS:** The Contractor shall do all the work necessary to join the Ductile Iron Sewer Pipe to the existing sewer as shown on the plans. The cost for doing this shall be included in the unit price bid for this item.

PK-687.5. **MEASUREMENT AND PAYMENT:** The quantity of **DUCTILE IRON SEWER PIPE** to be paid for under this item shall be the number of **LINEAR FEET** (laying length) of each size pipe, including fittings, furnished, placed and measured in its final position, in accordance with the plans and specifications and the directions of the Engineer.

The price bid shall be a unit price per **LINEAR FOOT** of laying length of Ductile Iron Sewer Pipe of each size shown and shall include the cost of all labor, materials and equipment necessary to complete the work, including delivering, handling and laying of pipe, connection and fittings, backfilling with clean fill, all in accordance with the plans and specifications to the satisfaction of the Engineer.

Excavation, Concrete and Broken Stone shall be paid separate for under their respective items.

Item No.	Item	Pay Unit
PK-687	DUCTILE IRON SEWER PIPE – 8" DIA.	L.F.

END OF SECTION

SECTION PK-900 – HYDRODYNAMIC SEPARATOR

PK-900.1. **WORK:** Under this item, the Contractor shall provide and install a **HYDRODYNAMIC SEPARATOR** of the size called for on the plans, where indicated on the plans, or as ordered by the Engineer, in accordance with the plans, specifications, and directions of the Engineer.

PK-900.2. **MATERIALS:**

HYDRODYNAMIC SEPARATOR: The **HYDRODYNAMIC SEPARATOR** shall be one of the following:

1. 6-foot diameter, offline Downstream Defender as manufactured by Hydro International
2. 6-foot diameter, offline Aqua-Swirl Stormwater Treatment System Model No. AS-6) as manufactured by AquaShield, Inc.
3. 6-foot diameter, offline Continuous Deflective Separator (CDS) Stormwater Treatment Device (Model No. CDS-6) as manufactured by Contech Engineered Solutions, LLC
4. Or approved equal.

MANHOLE COVER: Manhole Covers shall be of gray iron per ASTM A48, latest revision, Class 30 or better. All covers shall be suitable for highway traffic, meeting the requirements for heavy duty H-20 loading, per AASHTO M306-10.

VANDAL RESISTANT BOLTS: Each cover shall be furnished with two (2) Stainless Steel Penta-Head bolts as supplied by Campbell Foundry Co., Harrison, NJ, or approved equal. Typical plastic end caps are to be supplied with hardware and installed on Penta-Head bolts.

Each cover shall be furnished with two (2) Stainless Steel Penta-Head bolts as supplied by Campbell Foundry Co., Harrison, NJ, or approved equal. Typical plastic end caps are to be supplied with hardware and installed on Penta-Head bolts.

Each cover shall be furnished with two (2) Stainless Steel Penta-Head bolts as supplied by Campbell Foundry Co., Harrison, NJ, or approved equal. Typical plastic end caps are to be supplied with hardware and installed on Penta-Head bolts. Each cover shall be furnished with two (2) Stainless Steel Penta-Head bolts as supplied by Campbell Foundry Co., Harrison, NJ, or approved equal. Typical plastic end caps are to be supplied with hardware and installed on Penta-Head bolts.

PK-900.3. **INSTALLATION:** The installation of the **HYDRODYNAMIC SEPARATOR** shall conform to the Excavation, Setting Frames, and Incidental Work requirements specified in the Catch Basins, Drop Inlets and Manholes standard specification. Installation shall also conform to the manufacturer's specifications, including installation of the structure on a 12-inch thick broken stone subbase.

PK-900.4. **SUBMITTALS:** All submittals shall be in accordance with the S-Pages. The Contractor shall submit the following for review and approval prior to manufacture.

SHOP DRAWINGS: The Contractor shall submit shop drawings showing all invert elevations for approval prior to ordering the structure.

FOUNDRY CERTIFICATES: The Contractor shall submit foundry certificates on certifying the

material requirements above.

OPERATIONS AND MAINTENANCE MANUAL:

The Contractor shall submit the Operations and Maintenance Manual for the Hydrodynamic Separator proposed for use. The manual should include in all information necessary to run, inspect, and maintain the system including recommended procedures and schedules for maintenance frequency.

PK-900.5 MEASUREMENT AND PAYMENT:

The quantity of **HYDRODYNAMIC SEPARATOR** to be paid for under this item shall be the number of **EACH** structure furnished and installed in accordance with the plans, specifications, manufacturer's recommendations and directions of the Engineer.

The price bid shall be a unit price for **EACH** and shall include the cost of all labor, materials and equipment, including manhole covers, in accordance with the plans, specifications and to the satisfaction or the Engineer.

Excavation and temporary sheeting shall be paid for under their respective contract items.

Item No.	Item	Pay Unit
PK-900	**HYDRODYNAMIC SEPARATOR**	**EA**

END OF SECTION

FLOODWALL - PAGES

SPECIAL FLOODWALL SPECIFICATIONS

CONTRACT SANDRESM1

The specifications in the FLOODWALL-Pages cover the procurement, fabrication, and construction of the waterfront esplanade, cut-off walls, embayments, Williamsburg Bridge security bollards, floodwalls, floodgate foundations, manhole flood proofing, construction methods and associated works.

The FLOODWALL-Pages supplement the specifications shown on the Specifications and Standards of New York City sheet at the beginning of this Volume 3, which apply to the work except as modified in these Contract Documents.

(NO TEXT ON THIS PAGE)

TABLE OF CONTENTS

Section	Description	Page No.
Section PK-ESCR 715	Chain Link Fence Sliding Gate	1
Section ESCR-2	Jet Grouting	5
Section ESCR-2.27	Rip Rap	16
Section ESCR-3	Deck Drain for Esplanade	20
Section ESCR-3.05	Concrete	22
Section ESCR-4	Movable TL4 Stainless Steel Jersey Barrier	46
Section ESCR-4.06	Concrete in Structures	49
Section ESCR-4.11	Excavation and Filling	60
Section ESCR-4.14	Steel Reinforcement in Concrete	80
Section ESCR-5	Ground Improvement with Stone Columns	83
Section ESCR-5.1	Ground Improvement with Rigid Inclusions	93
Section ESCR-6.20	Rip Rap Stone	107
Section ESCR-6.27	Demolition of Structures	111
Section ESCR-6.68	Geotextile Filter Fabric	119
Section ESCR-7.18	Controlled Low Strength Material (CLSM)	123
Section ESCR-13	Architectural Concrete Textured Finishes	126
Section ESCR-60.29	Cathodic Protection for Piles	134
Section ESCR-61	Williamsburg Bridge Security Features	140
Section ESCR-76.11	Construction Report	145
Section ESCR-76.21	Monitoring and Post-Construction Report	148
Section ESCR-77	ECO Tide Pool Armor, ECO Armor Blocks, and ECO Sea pillars	154
Section ESCR-203	Obstructions to Prefabricated Vertical Drains or Deep Soil Mix Column Installation	158
Section ESCR-551	Steel Pipe Piles	160
Section ESCR-551.993	Micropiles	173
Section ESCR-552	Steel Sheet Piling	181
Section ESCR-557	Precast Concrete Slab Units	191
Section ESCR-559	Protective Coating for Waterfront Structures	193
Section ESCR-564	Structural Steel	196
Section ESCR-567	Esplanade Joint System	200
Section ESCR-9230	Sleeving and Sealing For Electrical Conduits	201
Section HW-914	Allowance for (Wayfinding) Totems	202
Section 8.52 FP	Steel Foundation Plate	203
Section 8.52 PT	Paving Tray	204
Section 8.52 WSF	Wayfinding Sign Footing	206
Section 7.07 B	Furnish and Install New Steel Bollards	208

(NO TEXT ON THIS PAGE)

SECTION PK-ESCR 715 – CHAIN LINK FENCE SLIDING GATE

WORK: Under these Items, the Contractor shall furnish and erect a motorized operated chain link fence sliding gates of the heights and sizes shown on the contract plans and in accordance with the specifications and directions of the Engineer.

STANDARDS:

A. Underwriters Laboratory Gate Operator Requirements (UL 325).

1. Automated/operated vehicular gates are not to be used for pedestrian traffic. Separate pedestrian gates must always be provided if pedestrian traffic is expected.

B. ASTM F 2200 – Standard Specification for Automated Vehicular Gate Construction.

C. ASTM F 1184 – Standard Specification for Industrial and Commercial Horizontal Slide Gates, Type II, Class 2.

D. American Welding Society AWS D1.2 Structural Welding Code.

MATERIAL: In general the sliding gate frame and fabric shall match the adjacent chain link fence size, type and material. Unless otherwise noted below, all related materials shall conform to Subsection 6.34.2, Standard Highway Specifications, NYCDOT.

Overhead Track Assembly: Manufacturer's standard track, with overhead framework supports, bracing, and accessories, engineered to support size, weight, width, operation, and design of gate and roller assemblies.

Diagonal Bracing. Diagonal "X" bracing of 3/16" or 1/4” diameter stainless or galvanized steel cable shall be installed throughout the entire gate frame. Optional pipe / tube bracing may also be used in lieu of cables.

Bottom Track: The bottom track shall be a minimum of 2” x 2” x 1.12#/ foot (6063-T6) aluminum extrusions. For openings greater than 25’, the bottom track shall be a minimum of 2” x 5” x 3.12# / foot.

All welds on the gate frame shall conform to Welding Procedure Specification and Procedure Qualification Record to insure conformance to the AWS D1.2 Structural Welding Code. All individual welders shall be certified to AWS D1.2 welding code.

Steel Barbed Wire: ASTMA 121, two-strand barbed wire,12.5 ga., 4 point round barbs spaced not more than 4” o.c. Zinc coated, type Z, class 3. Clips and or tie wire fasteners shall be stainless steel.

Gate Mounting Structure:

1. The gate frame shall be supported from the track by two (2) swivel type, self-aligning, 4-wheeled, sealed lubricant, ball-bearing truck assemblies.
2. The bottom of each support post shall have a bracket equipped with a pair of 3” (76mm) UHMW guide wheels. Wheel cover protectors shall be included with bottom guides to comply with UL325.
3. Gap protectors shall be provided and installed, compliant with ASTM F 2200-05.

Posts: A single set of support posts shall be a minimum of 4" O.D. round SS40 or 4” x 4” x 3/16” wall square steel tubing, grade 500 or as designed by the manufacture based on the gate size.

Gate posts shall be galvanized and supported in concrete footings as specified by the manufacturer based on the gates size.

Electric Gate Operator

Operator shall have a half or 1 HP continuous-duty PSC motor, 115 or 230 VAC single phase compatible based on the requirements of the gate weight and length. Operators shall also have the following features:

- Durable, weather resistant, black UV Stabilized polyethylene cover
- Reliable chain drive; 1/2 HP #41 chain, 1 HP #40 chain
- Heavy-duty, zinc plated, steel chassis
- Pad mountable
- Exterior reset button
- UL325/UL991 compliant APeX controller
- Easy-to-operate emergency manual disconnect handle
- Fully integrated radio receiver and system shall be compatible with current users transmitters (clickers).

Electrical features shall include the following:

- Integral entrapment sensing system with digital set point for quick accurate adjustment and enhanced safety
- Continuous-tone entrapment alarm with reset button
- Integrated programmable warning beeper during gate movement
- LED diagnostic display for ease of setup and troubleshooting
- Selectable pre-start alarm with provision for ADA compliant visual pre-start and run alarm
- Regulated 24 Volt DC power available for access control accessories
- Integrated maximum run and auto close timer (0-9 minutes)
- Built-in networked dual gate capability using 3-wire shielded cable

Electrical: Conduit, wiring, junction boxes, weather tight GFI outlet, etc. shall be sized to meet the requirements of the gate operator system and conform to NYCDOT Street Lighting specifications.

INSTALLATION:

Gate Installation:

Final grades and installation conditions shall be examined. Coordinate installation start and end dates with the Engineer. Installation shall not begin until all unsatisfactory conditions are corrected.

Equipment in this section shall be installed in strict accordance with the manufacturer's printed instructions unless otherwise shown on the contract drawings.

The gate and installation shall conform to ASTM F 1184 standards for aluminum cantilever slide gates, Type II, Class 2. If the gate system is to be automated, the gate and installation shall also comply with ASTM F 2200 and UL 325.

Gate Operator Installation:

Contractor shall extend the power source from the current gate location to the proposed location as shown on the contract plans or as directed by the Engineer. New electrical system shall conform to the latest electrical code requirements and gate operator system requirements.

Construct concrete pad as shown on the contract plan and per manufacturer's instruction. Coordinate installation of electric conduit within the concrete pad.

Set operator on pad per manufacturer's specifications and to provide proper chain operation.

Signage: Install signage provided by the manufacturer. Install signage as required by the Engineer. Signage may require being removed from existing gate location to the new location. Contractor shall provide new hardware as required to mount signs as directed by the Engineer.

Install barbed wire on extended post above the gate frame as detailed on the contract drawings. Assure that the installation does not interfere with the operation of the gate.

SYSTEM VALIDATION:

A. The complete system shall be adjusted to assure it is performing properly to the satisfaction of the Engineer.

B. The contractor shall test that the existing user transmitters will communicate with the new gate operator system.

C. The system shall be operated for a sufficient period of time (minimum 30 days or as approved by the Engineer) to determine that the system is in proper working order. Contractor shall lubricate, adjust and or replace fence, track and system components as needed.

D. Operated gate systems - test and explain safety features:

1. Each system feature and device is a separate component of the gate system.
2. Read and follow all manufacturer's instructions for each component.
3. Ensure that all instructions for mechanical components, safety devices and the gate operator are available for everyone who will be using the gate system. Provide 2 copies of manufacturer's instruction / manuals including parts list.
4. Ensure the parking lot owner is clear with regard to the safety points concerning the basic operational guidelines of the safety features of the gate operator system. These safety points are listed in the gate operator manual and must be read prior to system use.

SUBMITTALS: All submittals shall be in accordance with the requirements of the S-Pages.

Certification: The Contractor shall submit, at his own expense, a certification from the supplier for the following:

1. All castings are made from malleable iron.

2. All hot-dipped galvanized items have met the ASTM serial designations as indicated in this specification.
3. Gate manufacturer shall certify gate is manufactured in compliance with ASTM F 2200, Standard Specification for Automated Vehicular Gate Construction.
4. Radio control has code compatible universal receiver that is compatible with existing user transmitters.
5. Manufacturer's warranty for sliding gate and operator controller.

Shop Drawings: Before the work in the shop is started, the Contractor shall submit shop drawings for approval. Include complete details of fence and gate construction, fence height, post spacing, gate locking device, dimensions and unit weights of framework and concrete footing detail. Provide details and wiring diagram for power, signal, ground and control wiring.

Product data: For each type of product include construction details, material descriptions, dimensions of individual components and profiles, and finishes for the following:

1. Fence and gate posts, rails, fittings and hardware.
2. Chain-link fabric, reinforcements, and attachments.
3. Barbed wire
4. Gate operators, including operating instructions and motor characteristics.

MEASUREMENT AND PAYMENT: The quantity of chain link fence sliding gate shall be the number of gates actually installed by the contractor at the locations shown on the contract plans to the satisfaction of the Engineer.

The unit price bid for each chain link fence sliding gate shall cover the cost of all labor, materials, plant, equipment, insurance and necessary incidentals required to furnish, install and test new posts, chain link fence gate, sliding gate system, operator control system, and electrical system, complete in place, including excavation, backfilling, signage, barbed wire and concrete footings and pad where necessary; furnish samples for testing, as may be required and completing the work; all in accordance with the contract plans, specifications and the direction of the Engineer.

The cost to restore paved areas disturbed by the new gate installation and removal of existing gates shall be paid for separately under their respective contract Items. Removal of the existing sliding gates and associated operator systems and components shall be paid for under item 6.34 X per linear feet of existing opening.

Item No.	Item	Pay Unit
PK-ESCR 715A	CHAIN LINK FENCE SLIDING GATE AT EAST RIVER HOUSING	EA
PK-ESCR 715B	CHAIN LINK FENCE SLIDING GATE AT MONTGOMERY STREET	EA

END OF SECTION

SECTION ESCR-2 – JET GROUTING

2.01 INTENT.

This section describes the performance of the jet grouting that will be used in the flood protection system as a seepage barrier, gate foundation, floodwall, and ground improvement. The Contractor shall be responsible for selecting jet grouting parameters, equipment, and construction methods to meet the specified requirements of the Engineer. Design, consisting of area replacement ratio and depth of the elements or structures created by jet grouting is to be by the Engineer. Detailing to construct the required elements or structures is by the Contractor.

2.02 DESCRIPTION.

Jet grouting consists of creating soil-cement in situ by jet grouting to increase the compressive strength of the subsurface soils over the depths and limits shown on the Contract Drawings.

The work shall consist of all labor, equipment, materials, testing, and supplies necessary to design and install the jet grouting to meet the specified performance requirements.

The Contractor shall use the jet grouting method to install soil-cement in areas indicated on the Contract Drawings to form complete and continuous soil-cement elements.

2.03 MATERIALS.

The grout slurry may consist of a homogeneous mixture of any of the following materials:

(A) Cement, Portland, Type II, ASTM C-150 or AASHTO M85

(B) Ground granulated blast furnace slag, ASTM C989 (Standard Specification for Ground Granulated Blast-Furnace Slag for Use in Concrete and Mortars)

(C) Fly ash Class C or F, ASTM C618 or AASHTO M295.

Fly ash class to be utilized depends upon the required end product. Calcium content and loss-on-ignition properties to be considered for the fly ash that is being proposed.

(D) Potable Water or approved other source shall be free of deleterious materials that may adversely affect the grout. If water is from sources other than recognized potable water suppliers, the water shall be analyzed, e.g., in accordance with AASHTO T26, to ensure that it will have no adverse effect on the setting, hardening or durability of the mix and, where applicable, will not promote corrosion of the reinforcement.

(E) Bentonite, if required, powdered bentonite per API Standard 13A.

(F) The ratios of the material components, by weight, shall be proposed by the Contractor, confirmed during the preconstruction test program, and reviewed by the Engineer. Once accepted, grout slurry composition shall not be changed unless requested in writing by the Contractor and accepted in writing by the Engineer.

2.04 EQUIPMENT.

(A) All equipment used for drilling boreholes; lowering, raising and rotating jet monitors; mixing grout; supplying pressurized grout and air-water to jet monitors; and jet monitors shall have proven performance records for use in jet grouting work, as demonstrated by the information to be submitted.

(B) Drilling Equipment

Use drilling equipment of a type and capacity suitable for drilling required hole diameters and depths, and lowering, raising, and rotating jet grout monitors to the depths and at the rates required to perform the work as shown on the Contract Drawings and as specified herein. The drill rig shall be equipped with automated controls to regulate and maintain consistent rod lift rate and rod RPM, and shall have pressure gauges and flow meters for all fluids injected.

The drilling equipment shall have specialty drilling bits capable of advancing through the site subsurface conditions including, but not limited to, concrete, brick, stones, timber piles, seawalls, cobbles, and boulders.

(C) Grout Mixing and Injection Equipment

Use grout mixers and holding tanks, water tanks, air compressors, and pumps of sufficient capacity to ensure adequate supply of grout, air, and water at required pressure to the jet grouting monitors during a full work shift to produce grout elements of the quality and dimensions necessary.

Grout mixers must be high shear type and equipped with load cells to accurately weigh and proportion each component of the grout mix. Paddle type mixers must be utilized.

For high grout volume demand, batch mixing may not produce sufficient supply and alternate mixing methods must be considered with evidence that quality is not compromised.

(D) Jet-Grouting Pump

Shall be capable, with the nozzles proposed, of providing the required pressure and flow rate adequate for the execution of the work.

(E) Compressor (for Double and Triple Fluid Jet-grouting)

Shall be capable of producing the pressure and flow rate values proposed by the Contractor depending on the parameters chosen.

Double fluid jet grouting refers to the jet grouting technique where one fluid, typically neat cement grout, is injected at high velocity through horizontal radial nozzle(s) and is assisted by a second fluid, typically air, delivered through a coaxial nozzle(s), to directly erode and mix with the in-situ soil.

Triple fluid jet grouting refers to the jet grouting technique where one fluid, typically water, is injected at high velocity through horizontal radial nozzle(s) and is assisted by a second fluid, typically air delivered through a coaxial nozzle(s), to erode the in-situ soil, while a separate nozzle placed lower on the monitor delivers a third fluid, typically neat cement grout, at lower velocity to simultaneously fill the soil zone eroded by the cutting fluids (air and water).

(G) Filling Grout Pump (for Triple Jet-Grouting)

Shall be capable of producing the pressure and flow rate required, and proposed by the Contractor depending on the parameter chosen.

(H) Jet Grout Tools

Contractor shall use jet grouting monitors with appropriate nozzles with the capacity suitable for producing jet grout elements in the soil types identified during

Subsurface Explorations performed at the site, and of the size and depth shown on the Contract Drawings and as specified herein. The drill hole diameter shall be sufficiently large to be a clear path for continuous spoil return during all jetting operations.

(I) Equipment Instrumentation

Contractor shall provide instrumentation that allows continuous monitoring and automatic recording of data throughout the jet grouting operations. As a minimum, the following shall be provided:

- Pressure gauges/devices at the drilling rig to automatically record pressures of cement grout, water, and air during the grouting process.
- Flow meter(s) to monitor and record the rate and total volume of grouting fluids through the grouting monitor at every element.
- Devices that automatically monitor and record the rate of monitor rotation and withdrawal.

2.05 CONTRACTOR QUALIFICATIONS

(A) The entity performing the jet grouting shall be experienced in jet grouting operations comparable to that described herein and have at least 5 years of experience in jet grouting methods. Jet grouting experience shall include at least 5 projects of similar magnitude and complexity to that required for the program specified herein.

(B) The jet grouting field superintendents shall each have at least 5 years of experience in jet grouting techniques similar to that required for the Work; including at least 2 projects, one of which within the past 5 years of similar magnitude and complexity to that required for the Work.

2.06 SUBMITTALS

(A) Contractor shall submit qualifications, and information regarding similar projects the Contractor has constructed, where jet grouting was utilized.

(B) Jet Grouting Equipment

Contractor shall provide catalog cuts, details of grout mixers, pumps, drill rigs, and a plan view of the jet grout equipment arrangement proposed for use on this project, noting any equipment that has been modified or is of unique construction.

Examples of field data collection forms, including a sample copy of daily field report.

(C) Grout Mix Design

Mix design for the project indicating sources and types of grout materials, including (if available) field test data from previous projects.

Method for verifying grout mix proportions.

(D) Field Demonstration Test Program

Details of proposed field demonstration test program for jet grouting. This shall include location of test columns, layout of test pattern, jet grouting parameters to be used and variables to be tested during test program, and details of proposed quality control/quality assurance testing to meet acceptance criteria specified.

Following performance of the field demonstration test program and prior to beginning production jet grouting operations, submit a summary of the test program including details regarding as-built layout of test area, drilling procedures, grout mixture, jet grouting parameters, quality control/quality assurance records and test results, and proposed jet grouting parameters for use in production grouting based on test program.

(E) Jet Grouting Procedure

General Work Procedures Plan outlining the spacing, location, depth and general sequence to achieve the specified criteria detailed in this specification. Jet Grout element locations shall be dimensionally referenced to the contract drawings and shown on layout plans of suitable scale to effectively indicate the details of the layout. If pre-drilling of jet grout holes is to be utilized, describe the methods and type of equipment to be used.

Contractor to provide a jet grout spoil return management plan outlining waste containment methods during jet grouting and treatment and removal plans for jet grout spoil return. Include estimated width of annulus for spoil return and corrective actions to be taken if spoil return is not free-flowing, interrupted or episodic.

Jet grout site specific safety plan or job hazard analysis.

(F) Quality assurance, quality control and verification procedures to be used for the field test and production work.

Details of the procedures to obtain soil-cement samples; and catalog cuts or shop fabrication drawings of the soil-cement sampling device and curing boxes.

Proposed details and formats of all required tabular and graphical data presentations that will be submitted to the Engineer during the course of the Work. This shall include submittal of a copy of the reports used for data monitoring and recording.

Details for hydraulic conductivity testing and/or water-tightness testing if specified.

Details of column diameter and overlap verification.

(G) Contingency Plan shall be established by the Contractor to remediate any condition where it is found that jet grout columns were not constructed to the required or planned dimensions, including diameter or length.

(H) Daily Reports

Within one business day after the end of a work shift, the daily reports shall be submitted to the Engineer.

2.07 TEST PROGRAM.

(A) Prior to production work, a test program shall be conducted by the Contractor in accordance with the accepted work plan, at an on-site location agreed upon with the Engineer. The test program shall resemble the production jet grouting that will be constructed for the project.

The test program shall be used to optimize/verify the various parameters including type of jet-grouting (single, double or triple), necessity of pre-jetting with water, grout mix composition, fluid(s) flows and pressures, rotational speed, lift rate, spoil

return, grout, and number and size of nozzles; and confirm that resultant in situ soil-cement properties and dimensions meet required design criteria.

(B) The test program will be observed, reviewed and verified for contract conformance by the Engineer. The test program shall be installed within the project site in areas near the planned production work at a location agreed upon between the Engineer and the Contractor and in representative soils and depths anticipated to be found during production work.

(C) Each test section shall consist of a plan of elements suitable to demonstrate feasibility and installed to the same elevations specified for the production jet grouting work.

(D) The test elements shall be exposed by excavation for the upper 8 ft and measured for geometric properties. Proper shoring shall be installed to ensure the safe sampling and testing of the jet grout column at no additional cost to the City.

Core samples or other testing method shall be used to demonstrate column size/geometry for the full length. Coring at the centroid of a group of three (3) elements shall be carried out, as a minimum.

Where coring is used to verify diameter for the full length, verticality shall be measured for each test column and the core holes to verify the location of the elements at the final depth.

Three acceptable/representative specimens from each column shall be sent to an independent Laboratory for the tests required to satisfy the criteria specified in the Acceptance Criteria section. The costs for the coring, sampling, and testing and all associated work must be included in the Contractor's unit prices for jet grouting.

(E) Perform hydraulic conductivity testing when jet grouting is used as a seepage barrier. Hydraulic conductivity testing procedures shall be in accordance with ASTM D2434, or as approved by the Engineer.

(F) The results of the test program and the recommended jet grouting parameters for the production work shall be submitted in a report to the Engineer for approval.

The Contractor, at their expense, may be required to repeat the construction of a test section if the results of the test program do not meet the project requirements. The test program shall confirm that the resultant soil-cement properties met the required design criteria prior to the Contractor proceeding with production work.

(G) Jet grout columns for production and the testing program shall be installed using the same make and model of mixing machinery, cement grout mixing and pumping equipment, and the same materials and procedures implemented by the contractor. The production jet grout columns must follow the materials and procedures accepted in the test program.

2.08 INSTALLATION OF JET GROUT

(A) Contractor shall conduct all survey layout and utility clearance for the jet grouting operations and coordinate with all other Work on the site. Jet grouting shall be installed in a manner so as to not create obstructions or hindrances to subsequent aspects of the Work.

(B) Contractor shall take all precautions necessary to prevent movements and damage to any existing structure, roadways and utilities, and also prevent

settlement or heaving of the ground that could occur due to jet grouting operations in the vicinity of existing structures and utilities.

(C) Jet grouting around existing DEP sewers that are to remain in-service shall only commence after the sewer has been inspected using a CCTV system to verify and record the existing conditions of the sewer at no additional cost to the City. If the condition of the sewer is such that the jet grouting operations might cause further damage to the sewer and/or result in the leakage of jet grout into the sewer, the interior walls of the sewer shall first be lined in accordance with NYCDEP Standard Sewer and Water Main Specifications Section 50.71 Reconstruction of Existing Sewers Using DEP Approved Cured-in-Place-Pipe (CIPP) Lining Method.

(D) Jet grout columns shall be installed using the same make and model of; mixing machinery, cement grout mixing and pumping equipment, and the same materials and procedures implemented by the Contractor and accepted in the test program.

(E) Jet grout columns shall be installed in accordance with the patterns developed by the Contractor and accepted by the Engineer, to achieve the compressive strengths, unit weights, and required plan area coverages over the depths and limits shown on the Contract Drawings. Where the jet grouting layout consists of overlapping jet grout columns, center-to-center spacing of jet grout elements shall at any elevation not be greater than 75% of the jet grout column diameter and shall include allowance for tolerable vertical alignment deviation. The required strengths and unit weights are as follows:

Soil Type	Soilcrete Unit Weight (min) PCF	Soilcrete Unconfined Compressive Strength (min) PSI
Sand and gravel	120	750
Silty sand and silt	120	750
Clay	115	400
Organic Silt	110	250

(F) After final jet grouting, the Contractor shall obtain samples of in-situ jet grout in accordance with the locations and frequencies specified in the Quality Assurance-Quality Control Program.

(G) Any jet grouted element, which exhibits partial or total instability, shall be remediated at no additional cost to the City. Engineer will provide direction regarding jet grout columns that according to the records were not constructed to replicate test columns, and agreed upon production jet grouting procedure; additional measures shall be required for these jet grout columns.

(H) Once jet grouting is started at any location, the jet grouting operation shall continue until the soil-cement element is completed. If jet-grouting is interrupted during the execution of a column, the re-start of the jetting shall be undertaken at least 1 foot below the stopping point.

(I) Jet grout columns shall not be installed within 2 ft as measured between outside edges of soil-cement elements that are less than 48 hours old. The 48 hour delay may be shortened if the Contractor demonstrates to the satisfaction of the Engineer that the installation of any adjacent placements would not have a deleterious effect on any previously installed soil-cement elements or the ground.

(J) The following horizontal and vertical alignment tolerances shall apply for the jet grouting:

- The maximum horizontal deviation of the as-installed center of any jet grout column at the ground surface or mudline installation level shall not exceed 3 in. from the layout center coordinate, shown on the accepted Contractor's submittal.
- The vertical alignment of the jet grout column (ie. vertical columns) shall not deviate in any direction more than 2% from vertical.
- At the direction of the Engineer, any jet grout column which exceeds the allowable horizontal or vertical tolerances shall be re-mixed within two days of initial placement, or supplemented with one or more adjacent overlapping columns, at no additional cost to the City.

(K) Contractor shall follow the approved Contingency Plan for the remediation of any condition where it is found that jet grout columns were not constructed to the required or planned dimensions, including diameter or length. This could occur due to the clogging of the equipment by the generated spoils. For such conditions, it might be necessary to install additional jet grout columns, or regrout the locations and depths affected. All remediation work performed by the Contractor shall be at not additional cost to the City.

2.09 OBSTRUCTIONS

(A) Subsurface strata may contain rubble, concrete, reinforced concrete slabs, timber piles, steel, bricks, stones, seawalls, abandoned foundations, utilities and other materials that can obstruct jet grouting operations. Where unknown obstructions are encountered during the jet grouting, the Contractor shall remove the obstruction or install additional jet grout columns to encapsulate the obstruction, at the direction of the Engineer.

(B) Each situation shall be resolved on a case-by-case basis. Payment shall be based on an agreed upon unit rate for handling obstructions. If such conditions are encountered, the Contractor shall notify the Engineer in writing, and provide all pertinent information relating to the nature, depth, plan location coordinates, expected extent of the obstruction, and proposed procedures to overcome the obstruction.

(C) If drilling for jet grouting cannot proceed due to an obstruction, the Contractor may elect to remove the object or submit an alternate jet grouting layout pattern to avoid or encapsulate the object, subject to the acceptance of the Engineer. Alternately, the Contractor may drill through the obstruction. Removal of the obstruction, or drilling through the obstruction shall be paid at the obstruction rate, while offsetting the column location will be paid at the standard rate for jet grouting in subsurface soils.

2.10 CONTAINMENT, COLLECTION, AND DISPOSAL OF SPOIL RETURN.

(A) At all times during jet grouting operations, the site shall be maintained cleared of all debris and water. Spoil return shall be piped or channeled to tanks or other collections structures. The Contractor shall regularly dispose of all waste materials in accordance with the requirements of the DEP and all other agencies having jurisdiction.

(B) Contractor shall be aware that subsurface contamination is expected in Reaches H through M, and shall implement all necessary measures to prevent the spread of the contaminated material. The extent and content of the contaminated materials can be found in the Contract reference documents, but the Contractor shall perform their own testing for verification and disposal purposes.

(C) All jet grout collection, containment, and disposal methods shall be shown on the shop drawings in the Contractor's submittals to the Engineer prior to the start of jet grout operations. The Contractor shall be responsible for and incorporate all sedimentation and turbidity control measures required by applicable federal, state, and city regulations.

(D) The Contractor shall take all necessary precautions and implement measures to prevent any spoil return, other spoil material or stockpiles materials from entering the storm drain structures, drainage courses, and other utility lines or from leaving the site via surface runoff. The Contractor shall prevent the migration of spoil return, spoil material, or stockpiled materials into any surface water body, beyond the immediate limits of jet grouting operations.

2.11 QUALITY CONTROL / QUALITY ASSURANCE

(A) All jet grouting shall be performed in the presence of the City's QA Representative. City's QA representative shall be notified prior to initiating jet grouting. Monitoring and logging of jet grouting operations for both test areas and production work shall be performed by the jet grouting Contractor.

(B) The Contractor's equipment shall be configured to record and continuously show all fluid flows and pressures, rotational speed, depth and rod lift rates. The rod lift rate and rod RPM shall be set by the driller then automatically controlled by the drill rig and automatically recorded on the jet grout installation log during the entire jet grouting process. The City's QA representative shall be provided the means to monitor this information in real time on request.

(C) All the data monitored and recorded shall be made available within one working day to the Engineer in a format previously agreed on prior to the work. The Contractor shall supply the Engineer with the software used for this task. The software shall be capable of processing the recorded data and presenting the data graphically in a satisfactory manner.

(D) Grout mix proportions shall be measured and documented by the Contractor per the submittal requirements. Appropriate records shall be kept by the Contractor and submitted to the Engineer to verify that grout mixture(s) are as accepted. Include daily quantities of materials used in Daily Reports.

(E) Throughout the jet grouting operations, perform continuous coring to full depth on 5% of production columns to obtain drill cores of the jet grouted soil. The core will be visually evaluated by the Engineer for compliance with specific acceptance criteria defined in this specification. The Contractor shall be notified immediately if the soil-cement samples do not meet the acceptance criteria outlined herein.

(F) Perform hydraulic conductivity testing of production elements where the jet grouting is used as a seepage barrier at the rate of 5% of the installed columns.

(G) Perform borehole deviation measurements on a daily basis for a minimum of 5% of the columns. Selection of columns for borehole deviation measurements must be approved by the Engineer.

2.12 DAILY REPORTS

(A) Within one business day of a work shift, submit summary daily reports during production jet grouting that provide the information listed below. A sample of the report form proposed for use by the Contractor shall be submitted to the Engineer for approval prior to the start of work.

(B) Daily reports shall include the following:

- Equipment and Personnel on site
- Work initiated and completed
- Production interruptions
- Grouting Records
    - o Jet grout element number, size and location.
    - o Time and date of beginning and completion of each grout element, including interruptions to the jetting process or material supply.
    - o Grout mix data, including mix proportions and unit weight density measurements.
    - o Injection pressure of all fluids used to construct each grout element.
    - o Flow rates of all fluids used to construct each grout element.
    - o Rotation rate and lift rate of jet rods for each grout element.
    - o Total grout quantity used for each element.
    - o Top and bottom elevations of the jet grout element.
    - o Whether flow of spoils return was continuous.
- Total quantities of materials used for that day.
- Observations of any unusual, or unanticipated conditions including obstructions, stoppages, loss of circulation, etc., impacts on instrumentation or monitoring.
- Applicable verification testing done.

(C) Continuous recording of jet grouting parameters shall be provided for each production column to verify consistency with the test program results.

2.13 ACCEPTANCE CRITERIA

(A) Installation records, daily reports, and other project documentation shall demonstrate that the selected parameters from the test program were accurately repeated for the production work.

(B) Wet Grab Soil-Cement Samples

A minimum of one in-situ sampling round, consisting of 3 sampling depths with 4 samples from each depth, shall be performed at a frequency of once per day, at locations selected by the Engineer. The samples shall be obtained at the same element which shall consist of a non-cured soil-cement sample obtained at three depths selected by the Engineer. The contractor shall obtain up to an additional wet grab sampling test suite at the direction of the Engineer, if required.

Each retrieved soil-cement sample shall be of sufficient volume to produce a minimum of four full cylinders, 6 in. diameter by 12 in. height. Separate and retain all soil-cement retrieved from each depth.

Soil-cement samples shall be protected from freezing and extreme weather conditions which could have deleterious effect, at all times in accordance with AASHTO T 23.

Soil-cement cylinders from each sampling depth, shall be tested to determine 7 day and 28-day unconfined compressive strength in accordance with AASHTO T 208.

If the Contractor cannot obtain all of the required wet grab samples of the soil-cement, in the designated soil-cement element, the Contractor shall obtain a full suite of wet grab samples from the next soil-cement installed by that rig.

(C) Coring / Uniformity: Recovery minimum 90%; Rock Quality Designation (RQD) minimum 50%

Full-depth core samples retrieved by the contractor shall be used to evaluate uniformity. Coring shall be with PQ-size triple core barrel with side discharge.

Core recovery (expressed as a percentage) is equal to the total length of recovered core divided by the total core run length. Length of recovered core includes lengths of treated and untreated soil.

Percent treatment is calculated as the total length of recovered core minus the sum of the lengths of unmixed soil regions or lumps that extend across the entire diameter of the core divided by the total core run length expressed as a percentage.

Uniformity is acceptable if percent treatment is at least 90% for every 5-ft core run. If the minimum percent treatment cannot be confirmed by coring in coarse sandy or gravelly soil, downhole camera/video can be used to confirm uniformity.

If the Contractor uses core runs shorter than 5 ft (e.g., 3 ft), then the recovery and percent treatment can be calculated by adding equal amounts of core run length on either side of the short core run length to make up a total 5-ft run length for calculation purposes.

(D) Hydraulic conductivity: $1x10^{-6}$ cm/sec

(E) Unconfined Compressive Strength of Jet Grout Soil Cement Mix

(F) At least 90 percent of all jet grout samples tested shall have a minimum 28-day unconfined compressive strength as specified above.

(G) Minimum overlap thickness: Where the jet grouting layout consists of overlapping jet grout columns, spacing between jet grouting columns shall be a maximum of 0.75 x jet grout diameter

(H) Borehole deviation and horizontal tolerances:

- The center of the elements shall not be more than 3 in. from the indicated plan location.
- Deviations shall be less than required for adequate column overlap.

Verification will be by obtaining vertical alignment profiles. Contractor must obtain vertical alignment profiles for 5% of the jet grout cement elements, but not less than one element per day. The vertical alignment profiles must be over the length of the soil-cement element and along two perpendicular axes, as directed by the Engineer.

2.14 MEASUREMENT.

The quantity of jet grouting to be measured for payment shall be by the cubic yard, measured to the nearest cubic yard per column, within only the “neat” plan area of the proposed jet grout shown

on the Contract Drawings or approved by the Engineer. The volume shall be determined by multiplying the “neat” area within this zone times the actual depth of the jet grout. Jet grouting installed to overcome unknown obstructions shall be included in the total measured quantity of jet grouting, as accepted by the Engineer. Additional quantities of jet grouting installed by the Contractor during remixing to achieve the performance requirements, or that are outside the limits of the jet grout shown on the Contract Drawings without the acceptance of the Engineer will not be measured for payment.

Payment for the jet grout test program will be on a lump sum basis. The test program will consist of initially installing demonstration jet grout columns. The test elements will be required to be exposed to a depth of 8 ft, and subsequently backfilled in a controlled manner to finished grade. Coring at the centroid of each three adjacent jet grout columns shall be required as part of the testing program, and laboratory testing is expected to include as a minimum, hydraulic conductivity and unconfined compressive strength. Results of the field demonstration test program are to be submitted as a report for the Engineer’s review.

2.15 PRICE TO COVER.

The contract unit price for jet grouting shall cover the cost of all labor, materials, plant, equipment, insurance, samples, testing, and incidentals required to furnish and install the jet grout within the plan area coverages over the depths and limits shown on the Contract Drawings, in full compliance with the requirements of the specifications. Jet grouting that does not meet the specific performance requirements shall be satisfactorily repaired or replaced by the Contractor at no cost to the City.

The lump sum price for the test program shall cover the cost of all labor, materials, plant, equipment, insurance, samples, testing, reporting, and incidentals required to perform the jet grout test program in full compliance with the requirements of the specifications.

Payment will be made under:

Item No.	Item	Pay Unit
ESCR-2.A	JET GROUTING FOR UTILITY CROSSING SEEPAGE BARRIER – ANGLED	C.Y.
ESCR-2.AO	JET GROUTING FOR UTILITY CROSSINGS SEEPAGE BARRIER – ANGLED AND WITH OBSTRUCTION	C.Y.
ESCR-2.GC	JET GROUTING FOR GATE CROSSING SEEPAGE BARRIER	C.Y.
ESCR-2.GCO	JET GROUTING FOR GATE CROSSING SEEPAGE BARRIER WITH OBSTRUCTION	C.Y.
ESCR-2.FD	JET GROUTING FOR GATE AND FLOODWALL FOUNDATION	C.Y.
ESCR-2.FD0	JET GROUTING FOR GATE AND FLOODWALL FOUNDATION WITH OBSTRUCTION	C.Y.
ESCR-2 TP	JET GROUT TEST PROGRAM	L.S.

END OF SECTION

SECTION ESCR-2.27 – RIP RAP

2.27.1 INTENT.

This section describes rip rap stone for use in the revetment in the embayments.

2.27.2 MATERIALS.

(A) Rip rap Material Properties

1. Stone Sources

a) The new stone with gradation given in Table 1 and Table 2 shall be furnished from a source designated by the Contractor, subject to the conditions herein stated (see Figure 1 for the armor stone gradation curves). The Contractor will conduct a quarry investigation and evaluate the quality test data provided by the quarry to determine whether acceptable stone can be produced from the proposed source. Satisfactory service records on other work may be acceptable. In order for the stone to be acceptable on the basis of service records, stone of a similar size must have been placed in a similar thickness and exposed to weathering under similar conditions as are anticipated for this contract and must have satisfactorily withstood such weathering for a minimum of 20 years. If no such records are available, the Contractor will conduct tests to assure the acceptability of the stone. In addition to an acceptable service record, the Engineer has the option to elect to have representative samples taken and tested.

b) Designate in writing only one source from which the Contractor proposes to furnish stone and notify the Engineer at least 60 workdays before the stone leaves the quarry. It is the Contractor's responsibility to determine that the stone source selected is capable of providing the quality, quantities and gradation needed and at the rate needed to maintain the scheduled progress of the work. Samples for acceptance testing shall be provided in accordance with Subparagraph “Stone Source Acceptance” below. If a source for the stone so designated by the Contractor is not accepted for use, the Contractor shall propose another source with no additional compensation.

c) Both prior to and after materials are delivered to the job site, visual inspections and measurements of the stone materials may be performed.

d) If it is found that the stone quality, gradation or weights of stone being furnished are not as specified or are questionable, re-sampling and re-testing by the Contractor shall be required. Sampling of the delivered stone for testing shall be performed at the Contractor's expense when test results indicate that the materials do not meet specified requirements.

e) Any material rejected shall be removed or disposed of as specified and at the Contractor's expense.

2. Stone Source Acceptance

a) Rip rap shall consist of stones of acceptable size and quality, placed in the embayment for shoreline protection. Size of the stone shall be as indicated

on the Contract Drawings. All rip rap stone shall meet the specified criteria below. The armor and underlayer stone shall be hard, close grained, free of cracks, seams or other imperfections which might adversely affect its durability when exposed to weathering and wave action of the inlet environment. All stones shall be roughly angular in shape, with at least dimension of any stone no less than one-thirds of its greater dimension. Flat stones will not be accepted. The inclusion of objectionable quantities of dirt, sand, clay and rock fines will not be permitted.

Table 1: Rip Rap Stone Acceptance Criteria.

Test	Reference	Armor Stone
Unit Weight	ASTM C-127	Greater than 165 pcf
Material	ASTM D-4992	Granite, Limestone, or Bluestone
Compressive Strength	ASTM D-2938	80-120 MPa
Absorption	ASTM C-127	0.5%-2.0%
Sulfate Soundness	ASTM C-88	2-10% loss
LA Abrasion	ASTM C-535	15-25% loss
Freeze and Thaw	ASTM D-5312	Less than 10%
Wetting and Drying	ASTM D-5313	Less than 1% loss
Petrography	ASTM C-295	No deleterious material

(B) Rip Rap Gradation

1. Gradation Test- Armor Stone

   a) A gradation test shall consist of weighing every stone in a representative sample to determine the amount of each stone between the various specified weights. The weights thus obtained are accumulated and expressed as a percent by weight of the total sample lighter than the various specified stone weight.

   b) Apparatus for testing of underlayer stone shall include: one Gilson Mechanical Testing Screen with sieve sizes from 6 inches to No. 10, one Ro-Tap sieve shaker with sieve sizes No. 4 to No.20, one large capacity sample splitter, one drying oven, one timer for sieve shakers, sieve brushes, scoops, etc., and scales, 100-gram sensitivity.

   c) Sample preparation, testing procedures, and computations for the armor stone gradation testing shall be performed as specified in CIRIA (C683, 2017).

   d) Drop Test: If required a drop test provides an immediate evaluation of the durability of very large stone during handling of the stone including placement into a structure. For comparability, the test stone(s) shall be dropped from an orange peel or by other means from a height of 3 m ± 0.1

m onto a rigid surface or second stone of comparable size. Dumping from a truck is not acceptable. The stone shall be examined carefully before as well as after the completion of the test. Failure criteria is the development of new cracks, opening of old cracks, and the loss of piece from the surface of the stone. Each stone shall be dropped a total of five times for evaluation purposes with examination after each drop. Contractor shall provide all necessary equipment and operating personnel to perform the testing. Costs of testing shall be borne by the Contractor.

e) The armor stone gradation shall be as specified below.

Table 2: Armor Stone Gradation

Class	EUL	NUL	NLL	ELL	AVE. W_{50}	W_{50} Range
Passing Requirements	>97%	>70%	<10%	<2%		
Armor (Unit: lbs)	331	220	44	18	132	110-154

The class limits are defined in accordance with CIRIA/CUR C683 Chapter 3 (2007) as follows:

-EUL (Extreme Upper Limit): The mass below which no less than 97 percent passing by mass is permitted.

-NUL (Nominal Upper Limit): The mass below which no less than 70 percent passing by mass is permitted.

-NLL (Nominal Lower Limit): The mass below which no more than 10 percent passing by is permitted.

-ELL (Extreme Lower Limit): The mass below which no more than 2 percent passing by mass is permitted.

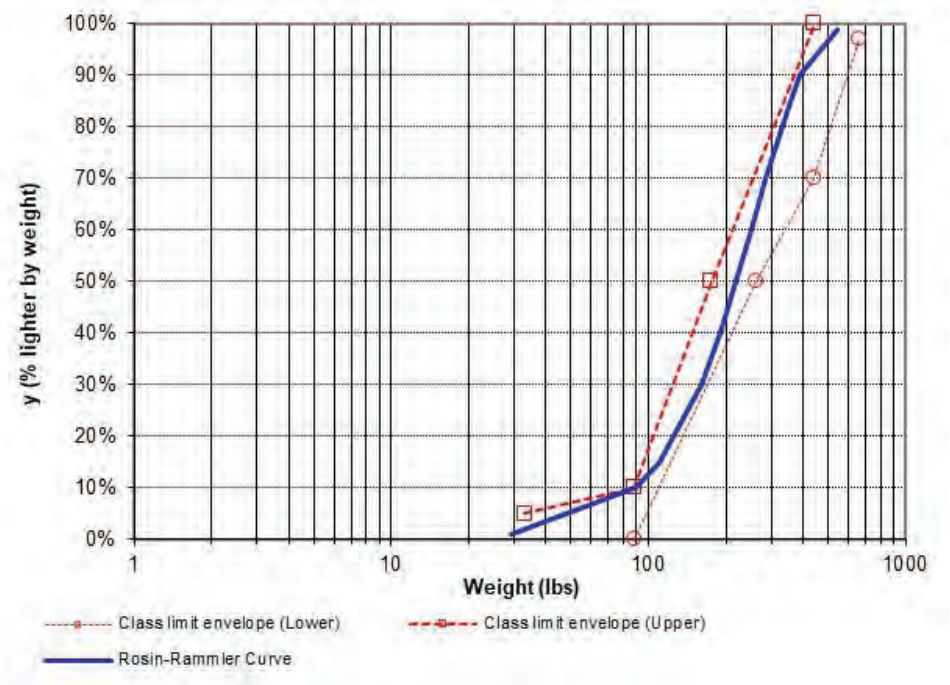

Figure 1: Armor stone gradation curve

(C) Stone Quality Testing During Construction

The Contractor shall submit on a weekly basis, for all material delivered during the week, a certification that the material meets all the requirements of the contract specifications. During the course of the work, the stone shall be tested by the Contractor. If such tests are determined necessary, the testing will be done at an approved testing laboratory.

a) The Contractor shall be required to obtain samples of at least five (5) pieces of armor stone and deliver them at the Contractor's own expense to the Contractor's approved testing laboratory in the State of New York. All tests shall be made by the Contractor at its own expense. Tests to which the material will be subject to are as indicated in subparagraph "Stone Sources Acceptance".

b) All stone will be subject to inspection during loading at the source and at the site of the work prior to placement.

Any stone rejected at the site of work as not meeting the requirements of these specifications for quality, condition, gradation or otherwise shall be removed from the site by and at the expense of the Contractor. Stone of suitable quality shall be furnished and placed at no additional cost to the City.

2.27.3 MEASUREMENT AND PAYMENT.

No separate payment will be made for complying with the requirements of this section.

END OF SECTION

SECTION ESCR-3 – DECK DRAIN FOR ESPLANADE

3.01 INTENT.

This section describes the installation of deck drains on the raised esplanade structure.

3.02 DESCRIPTION.

The deck drains shall be supplied by one of the listed manufacturers herein and as shown on the Contract Drawings. The deck drain shall be installed in preparation and as sub-drainage for future work over the raised esplanade deck structure.

3.03 MATERIALS.

(A) Medium/Heavy-duty two-piece Cast iron Floor/Deck drain body with drainage flange body with flat, corrosion resistant grate and integral stainless mesh screen covered grate or basket, secured in place by bolts for use in any type of planter/floor/deck construction for medium flow of liquid. Drain body shall incorporate drainage slots/weep holes and a non-puncturing flashing collar, threaded or no-hub spigot bottom outlet. The deck drain shall be furnished with a threaded or nu-hub joint cast or ductile iron tail piece. No hub shield, boot and fasteners shall be suitable for use in a marine environment. The deck drain shall be one of the listed products below, or approved equal:

Josam Company
525 W. U.S. Hwy 20, Michigan City, IN 46360, (Tel: 800-365-6726, Fax: 800-627-0008), www.josam.com
Super-Flo Top Floor Drain with Nikaloy Top, Series No. 32104-1-92

Zurn Industries LLC
511 W. Freshwater Way, Milwaukee, WI 53204, 855-663-9876
Z533 [229] heavy-duty parking deck drain w/ support flange Watts

Watts
815 Chestnut Street, North Andover, MA 01845-6098 USA, 978-689-6066
FD1100A, cast iron floor drain with anchor flange, reversible clamping collar with primary and secondary weep holes, adjustable round heel proof stainless steel strainer, and no hub (standard) outlet.

3.04 SUBMITTALS.

(A) Product Data

Submit manufacturer's detailed technical data for each deck drain unit type and each related component indicating material compositions, sizes, physical properties, and fastening accessories. Include identification and data for metal weld, solvent weld, and seal materials.

(B) Shop Drawings

Submit for shop drawings showing complete assembly of components and relationship to adjacent deck construction. Coordinate block out requirements with manufacturer of precast concrete deck.

(C) Samples for Verification

Submit representative assembled unit including support elements and plate strainer.

3.05 METHODS.

(A) Preparation and Verification of Conditions

Verify quantities, locations, and size of the block outs in the deck surface for the drain to be installed.

Confirm top of deck structure elevation at drain unit locations before fabrication completion of drain unit lengths (depth to be installed)

Before installation of the drain units, the precast concrete deck planks/girders must be grouted into position.

(B) Installation

Prior to installation of the deck drain assembly, verify the length of tailpiece piping and adjust as necessary.

If block outs for installation of deck drain units have not been made in deck structure or have been incorrectly located, penetrations through the precast deck structure shall be core drilled to the diameter sizes indicated for full depth of deck structure. Core drilling shall only be performed after joints between precast planks/girders have been grouted.

Install the deck drains with the attached cast iron pipe tail piece assembly, level, plumb, and secured to concrete deck with grout prior to placement of gravel and back fill over the drains and deck. Joint between the drain body and tail piece shall extend 2 in. below the bottom of underside of deck, thus allowing the pipe assembly to be removed and replaced in the future.

Install sealant in annular space between the bottom of the pipe tail piece and deck. Install backer rod inside annular space and apply primer to cast iron pipe prior to installing sealant. Sealant should be installed 2 horizontal to 1 vertical in dimensions. Therefore, if the annular space is ½ in. wide, the sealant shall be installed ¼ in. depth. Protect unit from damage before and during topping slab placement. Top surface of grating shall be flush to deck surface.

3.06 MEASUREMENT.

The deck drains shall be paid for on a per unit basis, including all drain assembly components, sealants, and block outs. Grouting of the deck drain units into place shall be part of the installation of the precast elements.

3.07 PRICE TO COVER.

The contract price per unit of deck drain installed shall cover the cost of all labor, materials, equipment, insurance, and incidentals required to furnish and install the deck drain complete in place in full compliance with the requirements of the specifications, and to furnish such samples for test as may be required.

Payment will be made under:

Item No.	Item	Pay Unit
ESCR-3	DECK DRAIN FOR ESPLANADE	EACH

END OF SECTION

SECTION ESCR-3.05 – CONCRETE

3.05.1. INTENT.

4 This section describes Concrete for use in the esplanade, esplanade cut-off wall, floodwall, floodgate foundations, tide gate chambers, retaining walls, retaining wall foundations, seatwall foundations, and other miscellaneous park structures.

3.05.2. CLASSES AND TYPES.

(A) Concrete shall be of the classes and types shown in Table 3.05-I.

Note: Based on dry-rodded volumetric measurement of ingredient materials:

High Early Strength Concrete is approximately equal to a 1 : 1-1/4 : 2-1/4 mix.

Class A-40 Concrete is approximately equal to a 1 : 1-3/4 : 2-3/4 mix.

Class B-32 Concrete is approximately equal to a 1 : 2 : 3-1/4 mix.

TABLE 3.05-I

Class		Concrete Type	Type of Portland Cement Concrete
Designation	Nominal Mix		
Flood Protection System (ESCR-4.06 HP FL)	-	Type IA Type IIA	Normal Air-entrained Moderate Sulphate Resistant Air-entrained
Marine / Esplanade Structures (ESCR-4.06 HP ES)	-	Type IA Type IIA	Normal Air-entrained Moderate Sulphate Resistant Air-entrained
High-Early	7-1/2 Bag Mix	Type IIIA	Moderate Sulphate Strength Resistant Air-entrained
Class A-40	7-Bag Mix	Type IA Type IIA	Normal Air-entrained Moderate Sulphate Resistant Air-entrained
Class B-32	6-Bag Mix	Type IA Type IIA	Normal Air-entrained Moderate Sulphate Resistant Air-entrained

Note: The above proportions shown for non-High-Early mixes shall be modified by pozzolan substitutes as per Subsection 3.05.4.

(B) Concrete shall be mixed by the following methods:

Method A -- Central Plant Mix

Method B -- Transit Mix

Method C -- Truck Mix

Method D -- Mixed by hand or in job mixers not exceeding one-half (1/2) cubic yard capacity when permitted by the Engineer.

Central Plant Mix Concrete is concrete produced at an approved plant, ready for use prior to discharge into a transporting vehicle.

Transit Mix Concrete is concrete whose constituent materials are proportioned at a central plant and mixed with water in transit to or at the point of deposition in a transporting vehicle.

Truck Mix Concrete is concrete whose constituent materials are proportioned at a central plant and transported to the point of deposition where water is added and mixed in a transporting vehicle.

Unless otherwise specified, concrete may be mixed by Method A, Method B or Method C.

(C) Class, type and method of mixing concrete shall be as specified.

Type, grade, size number and corresponding nominal size of coarse aggregate shall be as specified. Concrete shall be pigmented when specified.

3.05.3. MATERIALS.

Concrete shall be a homogeneous mixture consisting essentially of cement, fine aggregate, coarse aggregate, water, and admixtures and pozzolan (when used). It shall be proportion-strength concrete whose constituent materials are proportioned in accordance with specification requirements to produce a required strength. Air-entrained concrete shall be concrete which in addition to the above shall have a specified air content resulting from the use of an admixture in the concrete.

(A) CEMENT

Cement shall be dry, free from lumps and have a temperature less than 170° Fahrenheit when used.

For concrete exposed to view, the Contractor shall not use more than one (1) brand, unless otherwise permitted.

Cement shall be measured by weight or in full bags of 94 pounds each for Portland cement.

When cement is measured by weight, it shall be weighed on a scale separate from those used for the other materials. After weighing, the entire contents of the hopper shall be completely discharged.

When the cement is measured in bags, no fractions of bags shall be used unless weighed. Bags of cement shall be taken from the place of storage and placed adjacent to the mixer, in separate piles containing the exact number of bags for each mixer charge. Each pile shall be emptied into the mixer for each charge.

(B) AGGREGATES

Aggregates shall be measured by weight. Batch weights shall be based on saturated surface-dry materials and shall be corrected to take into account the weight of surface moisture contained in the aggregate.

When volumetric measurements are permitted, the Engineer shall require such increase in the volumes of fine and coarse aggregates as will compensate for the bulking. Only approved measuring devices shall be used.

NOTE: When aggregates are measured in the damp-loose condition (for use in Mixing Method D), they will occupy greater volume than when dry-rodded and the percentage bulking shall be determined by test. Approximate average bulking value for sand is twenty-five (25) percent and for coarse aggregate six (6) percent. Volumes may also be determined from the Contractor's approved weight formula by dividing by the damp-loose weight of aggregates per cubic foot. Average weight of damp-loose sand is 85 pounds per cubic foot and average weight of damp-loose coarse aggregate is 95 pounds per cubic foot.

(C) WATER

Water shall be measured by volume or by weight. The device for the measurement of the water shall be readily adjustable and, under all operating conditions, shall be accurate within one (1.0%) percent of its maximum capacity.

Water shall be potable and drawn from municipal water mains.

(D) PIGMENTED ADMIXTURE

When pigmented concrete is specified, the concrete shall be colored with an approved pigment conforming to the requirements of Section 2.19. The final color of the concrete shall be as approved by the Engineer. Pigments used shall not vary the air content of the concrete by more than ±0.5%. The concrete mix shall be adjusted to provide that the air content of the concrete remains within the specified tolerances.

Pigmented admixture shall be measured by weight. Water present in pigment shall be taken into account in measuring the quantity of water required for each batch.

(E) POZZOLANS

Fly ash shall conform to the chemical and physical requirements for Mineral Admixture, Class F listed in AASHTO M 295 and shall meet the requirements of the NYS Department of Transportation, Standard Specifications, Section 711-10, FLY ASH, except that no alternate Class of fly ash will be acceptable. Any fly ash hardened by moisture will be rejected. Fly ash stored over the winter at the concrete producing plant will be retested for specification compliance by the Department or its agent.

Ground granulated blast-furnace slag (GGBFS) shall conform to the chemical and physical requirements for Grade 100 or 120 slag, as classified in AASHTO M 302, and shall meet the requirements of the NYS Department of Transportation, Standard Specifications, Section 711-12, GROUND GRANULATED BLAST-FURNACE SLAG. Any GGBFS hardened by moisture will be rejected. GGBFS stored over the winter at the concrete producing plant will be re-tested for specification compliance by the Department or its agent.

Microsilica (Silica fume) shall conform to the standard and optional physical and chemical requirements of AASHTO M 307 and shall meet the requirements of the NYS Department of Transportation, Standard Specifications, Section 711-11, MICROSILICA. Microsilica shall be used wherever increased early compressive strength, reduced permeability and increased abrasion resistance is required.

Maximum pozzolan limits shall be based on ACI 318-14, Exposure Class F3.

(F) ADMIXTURES

Admixtures shall comply with the requirements of Section 2.09, Admixtures.

All admixtures shall conform to ASTM C 494. They shall contain not more than 0.05% chloride ions, and shall be used in accordance with the manufacturer's recommendations. Submit dosage charts, including the effects of concrete temperatures from 50 deg F to 90 deg F, to the Engineer.

A corrosion inhibitor admixture shall be included in the mix design for the flood protection system and marine concretes. The concentration of calcium nitrite shall be 30% +/- 2% by weight of solids per gallon. Corrosion inhibitor admixture shall not accelerate the setting time of the concrete mixture. Use a retarder and/or other admixtures to ensure that acceleration of setting time does not occur, while maintaining the applicable performance criteria.

Corrosion inhibitor must be on the NYSDOT Approved List 711-1300 for Calcium Nitrite Based Corrosion Inhibitors.

3.05.4. CONTRACTORS FORMULA

All concrete mix designs shall be subject to approval by DDC's Quality Assurance (QA) Bureau and in accordance with their "MIX DESIGN, LABORATORY AND PLANT APPROVAL PROTOCOL". Copies of this protocol may be obtained at the pre-construction meeting or from the Engineer. Before the Contractor begins to manufacture concrete, the Contractor shall secure DDC's QA approval of the mix design the Contractor proposes to use. the Contractor shall submit for this purpose a statement, in writing, of the sources of all ingredient materials, the type and brand of the cement, pozzolans and the number of pounds of each of the materials in a saturated surface-dry condition making up one (1) cubic yard of concrete. The calculated yield of the mix shall be within + 2% of the Theoretical one (1) cubic yard. The range of water-cement (W/C) ratios within which the concrete will be manufactured and the method of mixing to be employed shall also be stated. The mix design submittal shall include gradation of aggregates, specific gravities of ingredients, unit weight, mix proportion for each batch (a minimum of 4 batches except in case of precast plants where one specific mix may be proposed), compressive strength test results for each mix at 7 days, 28 days (high early strength mixes may require 6 hrs, 24 hrs, 3 days and shrinkage test as per the requirements), and graphical representation of strength vs. W/C projected in hours/days.

With the exception of high-early strength concrete, the Contractor shall be required to substitute Portland cement with pozzolans (Fly Ash and/or GGBFS) such that the maximum amount of Portland cement per cubic yard of concrete does not exceed 400 pounds, and with the use of an approved non-corrosive, non- chloride admixture as required to obtain a minimum compressive strength of 3,000 psi in seven (7) days. For high-early strength concrete the Contractor may substitute Portland cement with pozzolans (Fly Ash and/or GGBFS), pound for pound, up to 20% (or up to 25% for tidal/sea water spray areas) of the weight of cement specified for any concrete mixture provided the Contractor can obtain a minimum compressive strength of 3,000 p.s.i. in three (3) days. The Contractor, immediately following but not later than eight weeks after the date of the Contractor's Notice to Proceed, shall file with the Engineer, Age-Strength data of the job mix the Contractor proposes to use for the various ambient temperatures anticipated during the period of concrete placement. This data shall be presented in both tabular and graphical form for those various ambient temperatures with a maximum setting period of seven (7) days for Class B-32 concrete or seventy-two (72) hours for High-Early Strength Concrete.

Also, for high-early strength concrete, at no additional cost, the Contractor may be allowed to use a water reducing admixture to achieve an additional one (1") inch slump, for a maximum slump of four (4") inches, to enhance workability and to help in surface finishing of the concrete. The admixture shall conform to the requirements of Section 2.09, Admixtures. If such an admixture is used the concrete shall have a minimum compressive strength of 3,200 psi at three (3) days as determined by the average compressive strength of one set of three (3) concrete cylinders for each day's work. The Contractor shall submit the mix design for approval by the Engineer; however, such approval by the Engineer shall not relieve the Contractor of their responsibility for meeting the minimum three (3) day strength requirements specified herein, when admixtures for slump and enhanced workability have been used.

The approved mix design shall not be changed without the written permission of the Engineer.

The approval of materials shall not preclude subsequent withdrawal of such approval in case of development of qualities objectionable to the Engineer.

On receipt of new deliveries of materials during the period of the contract, the Contractor shall inform the Engineer and the Contractor shall modify the mix design as directed by the Engineer. The order to modify the mix design shall be confirmed in writing.

The relative amounts of fine and coarse aggregates in any class of concrete may be changed within the limits given in Table 3.05-II by the Engineer at any time in order to secure maximum density and to promote workability, provided the sum of the absolute volumes of the aggregates is unchanged. Such changes shall be made when required without extra compensation, regardless of the quantity of concrete affected thereby.

3.05.5. MIX DESIGN.

(A) Unless otherwise specified elsewhere herein, concrete shall comply with the applicable requirements of Tables 3.05-II, 3.05-III, 3.05-IV, 3.05-V, and 3.05-VI.

(B) Concrete of Type IA, IIA and IIIA shall have an air-entrainment of 4 to 7 percent when the coarse aggregate is 1-1/2" stone and 5 to 7 percent when the coarse aggregate is 3/4" stone, with 6.5 percent desired in either case, except for the Flood Protection System and Marine / Esplanade classes of concrete, which shall meet the requirements in Paragraph (F).

(C) When an air-entraining admixture is added to the concrete it shall comply with the requirements of ASTM Designation C260.

(D) Maximum water-cement ratio for concrete used in the Flood Protection System and Marine / Esplanade classes of concrete shall be 0.40.

(E) Chloride Ion Concentration by Weight of Cementitious Material (ASTM C 1152, ASTM C 1218, ASTM C 114, ACI 222R): The acid soluble chloride ions by weight of cementitious material in the concrete mix shall be less than or equal to 0.10% for reinforced concrete and 0.08% for prestressed concrete, as per ASTM C1202. The water-soluble chloride ions by weight of cementitious material in the concrete mix shall be less than or equal to 0.08% for reinforced concrete and 0.06% for prestressed concrete, as per ASTM C1218.

(F) Air entrainment in the Flood Protection System and Marine / Esplanade classes of concrete shall meet the requirements in Table 19.3.3.1 in ACI 318-14 for Exposure Class F3, as reproduced below.

Table 19.3.3.1—Total air content for concrete exposed to cycles of freezing and thawing

Nominal maximum aggregate size, in.	Target air content, percent	
	F1	F2 and F3
3/8	6	7.5
1/2	5.5	7
3/4	5	6
1	4.5	6
1-1/2	4.5	5.5
2	4	5
3	3.5	4.5

(G) The Upper Quality Limit, UQL, of concrete permeability for the Flood Protection System and Marine / Esplanade classes of concrete shall be 1,700 Coulombs when tested in accordance with ASTM C1202. Performance testing shall be performed at 28 days.

TABLE 3.05-II – PROPORTIONS

Class of Concrete	Nominal Size of Coarse Aggregate Used (in.)	Fine Aggregate Percentage by Weight of Total Aggregate (See Note 1)
Flood Protection System (ESCR-4.06 HP FP)	5/8 or 3/4	Note 2
Marine / Esplanade Structures (ESCR-4.06 HP ES)	5/8 or 3/4 1-1/2	Note 2
High-Early Strength	5/8 or 3/4 1-1/2	29 to 37 26 to 34
Class A-40	5/8 or 3/4 1-1/2	29 to 37 26 to 34
Class B-32	3/4	32 to 40

Note 1 – Quantity of fine aggregate may be varied within the limits indicated according to the type of coarse aggregate used, in order to obtain a smooth, dense, homogeneous and plastic mixture.

Note 2 – Fine aggregate shall conform to ASTM C33. Percentage by weight shall be selected by the Contractor to produce a workable and durable mix design.

TABLE 3.05-III - INGREDIENT MATERIALS

Applicable Sections							
Type of Concrete	Portland Cement	Pozzolans	Sand Fine Aggregates	Coarse Aggregate	Air-entraining Admixture	Pigment	Retarder
IA	2.10 Type I*	3.05.3.(E)	2.21 Type IA	2.02**	2.09	2.19	2.09
IIA	2.10 Type II*	3.05.3.(E)	2.21 Type IA	2.02**	2.09	2.19	2.09
IIIA	2.10 Type II* or III* Type IA	3.05.3.(E)	2.21	2.02**	2.09	2.19	2.09

* To be used with an approved air-entraining admixture, which shall be added at the time concrete ingredients are mixed with water.

** Coarse aggregate shall be Type 1, Grade A or Grade B, or Type 2, Size No. 357, Size No. 57 or Size No. 67 of ASTM Designation C 33, as specified.

TABLE 3.05-IV

COMPRESSIVE STRENGTH IN LBS. PER SQ. INCH, MIN. AVERAGE OF NOT LESS THAN THREE CYLINDERS OR CORES

Concrete – Type IA, Type IIA & Type IIIA at 28 Days	
Class of Concrete	Cylinders or Cores
Flood Protection System	5,000
Marine / Esplanade Structures	5,000
High-Early Strength	5,000***
Class A-40	4,000
Class B-32	3,200

***Concrete shall be required to obtain a minimum of 3,200 psi compressive strength at 3 days as determined by one set (3 cylinders) of concrete cylinders for each days work.

The above date limitations concerning cores refer to the date on which the concrete represented by the cores was deposited.

No reduction in minimum compressive strength will be allowed for concrete colored with pigment or any other additives.

TABLE 3.05-V

TIME STRENGTH TABLE PORTLAND CEMENT CONCRETE

When compressive strength tests are made after the standard 28-day period following placing of the concrete, the strength at 28 days shall be determined from the actual compressive strength in accordance with the following table:

Tested at Days	Divide by	Tested at Days	Divide by	Tested at Days	Divide by	Tested at Days	Divide by
28	1.000	44	1.071	60	1.120	76	1.157
29	1.005	45	1.075	61	1.122	77	1.159
30	1.010	46	1.078	62	1.125	78	1.161
31	1.014	47	1.081	63	1.127	79	1.163
32	1.019	48	1.084	64	1.129	80	1.165
33	1.023	49	1.087	65	1.132	81	1.167
34	1.027	50	1.090	66	1.134	82	1.169
35	1.032	51	1.093	67	1.136	83	1.171
36	1.036	52	1.096	68	1.139	84	1.173
37	1.040	53	1.099	69	1.141	85	1.175
38	1.045	54	1.102	70	1.143	86	1.177
39	1.049	55	1.105	71	1.146	87	1.179
40	1.053	56	1.108	72	1.148	88	1.181
41	1.058	57	1.111	73	1.150	89	1.183
42	1.062	58	1.114	74	1.152	90	1.185
43	1.066	59	1.117	75	1.155	Over 90	1.185

TABLE 3.05-VI - SLUMP VALUES

Concrete Placement	Design Slump Range, Inches	Maximum Slump, Inches
Sidewalks	1-1/2 to 3-1/2	3-1/2
Pavement Slipform Paving Form Paving	 1-1/2 to 2-1/2 1-1/2 to 2-1/2	 2-1/2 3
Pavement bases	1-1/2 to 4	4
Structural Slabs	3 to 4	4
Piers, Pedestals, Rigid Frames or Arches Box Culverts throughout, Footing and Headwalls, general purpose structural.	2-1/2 to 3-1/2	4
Cast-in-Place Piles	2-1/2 to 3-1/2	5
Underwater Concrete 6 inch minimum slump	6 to 7	8
High early strength pavement slabs or structural sections	2 to 3	3
Structural placement 3 inches thick or less	2-1/2 to 3-1/2	3-1/2
Slip formed median barriers, parapet walls, curbs	1/2 to 1-1/2	1-1/2
Floodwall (not part of cutoff wall) and flood gate foundations	2-1/2 to 4	4
Esplanade and cut-off wall pile cap (Marine Structures)	6 to 8	8
Concrete Seawall Cap (Marine Structures)	6 to 8	8

NOTE: Maximum slump for pumping applications shall be 8 inches as long as all other parameters are maintained within the values specified in this specification. Admixtures to increase slump but maintain other parameters are allowed with the approval of the Engineer. When a slump test is conducted on concrete produced by a mobile mixing unit, the slump shall be measured 3 to 5 minutes after discharge from the unit.

The above slump requirements shall apply at the point of discharge.

The Contractor shall supply at each point of concrete delivery a slump cone and rod conforming to the requirements of ASTM Designation C143 for use by the Engineer.

3.05.6. CONCRETE BATCHING PLANT REQUIREMENTS.

The batching plant shall be so designed, operated and coordinated as to produce a sufficient quantity of concrete for the construction specified.

(A) ACCEPTANCE

Each Portland cement concrete batching plant shall be subject to approval by DDC's Quality Assurance (QA) Bureau and their "MIX DESIGN, LABORATORY AND PLANT APPROVAL PROTOCOL". The minimum requirement for approval is that the proposed Portland cement concrete batching plant must be on the New York State Department of Transportation (NYSDOT) approved list for the current construction season.

The minimum requirement for approval of a pre-cast concrete plant is that the proposed plant must be on the NYSDOT approved list. A waiver for this

requirement may be granted by the DDC's Quality Assurance (QA) Director for special products that no NYSDOT approved plant is capable of producing.

Each Portland cement concrete batching plant shall also be subject to auditing and approval of the DDC's Director of Quality Assurance (QA). The Director of QA may at any time discontinue the use of any previously approved equipment if non-conformance with the specifications result during the progress of the work. When the Director of QA discontinues the use of the plant, production will not be acceptable for Department work until corrective measures satisfactory to the Director are carried out.

(B) BINS

The plant shall contain a sufficient number of aggregate storage or holding bins to produce the class of concrete specified. The bins shall have adequate separations for fine aggregate and for the various sizes of coarse aggregates.

Separate storage or holding bins shall be provided for cement of different types except that Type I or Type II may be combined in common storage. The bins shall protect the cement from rain and moisture.

Pozzolan shall be stored at the batch plant in a separate storage or holding bin and it shall be protected from rain and moisture.

(C) WEIGHT HOPPERS AND DISCHARGE CHUTES

The batching plant shall include separate weight hoppers for aggregate and cement. The cement weight hopper shall be enclosed to protect the cement against moisture and to reduce escaping dust.

All discharge chutes shall be arranged so that materials will not lodge or be lost on discharge. The chutes shall not be suspended from any part of the weighing system.

Vibrators arranged so that no significant vibrations are transmitted to the scales or other plant control equipment during the weighting process.

(D) SCALES

Each facility requires:

- Scales installed on or after January 2, 2003 for weighing materials shall be load cell type and shall indicate the load at all stages of the weighing operation from zero to full capacity.
- Scales shall meet the requirements of the National Institute of Standards and Technology, Handbook 44, with no less than 500 nor greater than 2000 scale divisions.
- Digital displays shall match the primary scale within one (1) division.
- The minimum resolution of digital displays shall be equivalent to or less than the minimum graduations on the primary scale.
- Digital displays shall be easily readable and located in direct sight from the operator's normal work station.

All plant scales shall be tested at the Contractor's expense by a competent scales technician as follows:

1. Annually, prior to use for Department work.
2. At intervals of not more than 90 calendar days.
3. Whenever a plant changes location.
4. At any time ordered by DDC's Director of Quality Assurance, or the Director's representative.

A cradle or test platform, approved by the Director of Quality Assurance or their representative, for each scale and at least 20 standard 25 pound test weights shall be provided for testing. The use of a set of tests weights for two or more plants will be permitted only when they can be made readily available within one (1) hour.

If directed by the Director of QA or their representative, provisions shall be made for locking scales against tampering.

(E) PROPORTIONING CONTROL EQUIPMENT

The materials, including admixtures, shall be proportioned by automatic proportioning devices, approved by the Director of Quality Assurance unless otherwise indicated on the plans or in the proposal.

The automatic proportioning equipment shall be installed in an area enclosed for protection against dust and inclement weather.

The requirements for these devices are specified under Subsection 3.05.7, Handling, Measuring and Batching Materials.

(F) INSPECTION FACILITIES

Each Portland cement concrete plant site supplying concrete for Department work shall have a building or room available for Department use as an office and testing facility. The facility shall be located such that the testing and inspection can be performed in a reasonable manner. The building or room shall be ventilated, lighted, and adequate heating and cooling equipment shall be provided to maintain an ambient air temperature of 70^0 F $\pm 5^0$. The facility shall contain tables, benches, shelves, running water and the necessary equipment required for testing concrete aggregates according to the Department's written instructions. A telephone or other approved means of communication shall be provided at the plant site for the Department's use. A toilet and a lavatory shall also be available at the plant site.

The following equipment is the required minimum and shall be properly installed and maintained in good operating condition:

1. A power driven coarse aggregate sieve shaker with a minimum clear sieve area of 324 Square inches and equipped with an automatic shut-off timing device. A dust cover shall be provided when the shaker is installed inside the facility. The shaker shall be anchored to a firm base.
2. A fine aggregate sieve shaker, power driven independently of the coarse aggregate shaker, for eight-inch diameter sieves and equipped with an automatic shut-off timing device.
3. An aggregate sample splitter adjustable for splitting samples ranging in maximum aggregate size from one-half inch to two inches.
4. A scale, fifty pounds minimum capacity, with maximum 0.02 pound graduations.
5. A scale, one thousand gram minimum capacity, with maximum 0.5 gram

graduations.

6. A stove or hotplate suitable for sample drying.
7. A two drawer, legal size, file cabinet with lock and two keys for the exclusive use of the inspector.
8. Necessary accessory test equipment including sieves suitable for all types of aggregates to be used and sample containers.

When the testing facility is shared with others, the Department shall be given priority during production for Department use. The suitability of the inspection facility and the condition of the equipment shall meet the approval of DDC's Director of Quality Assurance.

The plant facilities for inspection personnel are the property of the Contractor or their supplier and they shall be provided and maintained in clean condition by the Contractor or their supplier during the course of the work.

3.05.7. HANDLING, MEASURING, AND BATCHING.

The batch plant site, layout and equipment shall be such as to assure a continuous supply of material to the work.

The aggregates shall be batched at the batch plant site according to these specifications. When approved by the Director of Quality Assurance, bagged cement may be incorporated into the mixture. The batch size shall be adjusted to use whole bags of cement.

(A) STOCKPILES

Stockpiles shall be formed on bases approved by the Director of Quality Assurance or their representative. The bases shall have adequate drainage and may consist of prepared aggregate bases, concrete, metal or wood surfaces, or barge floors. The stockpiles shall be built by methods which do not cause particle segregation. Aggregates from different sources and of different sizes shall be stockpiled separately in a manner such that the aggregates will not be contaminated by other sizes or aggregates from other sources. Department approved aggregates shall be stockpiled separately from the non-approved aggregates.

Aggregates shall be handled throughout the batching process in a manner such as to maintain uniform grading of the material. In case the aggregates contain a high or non-uniform moisture content, the aggregates shall be stockpiled a sufficient length of time to stabilize the moisture content.

Each plant shall be equipped with an approved moisture sensing device that will indicate on a readily visible scale or chart the moisture content of the fine aggregate as it is batched. The free moisture content of the fine aggregate at the time of batching shall not exceed 8 percent of its saturated-surface dry weight.

(B) HEATING MATERIALS FOR COLD WEATHER CONCRETING

The aggregates and/or water shall be heated prior to batching to obtain a plastic concrete temperature not less than 50^0F or more than 70^0F, at the time the mixture is placed in the forms. When the air temperature is 32^0F or above, and when the aggregates are free of ice and frozen lumps, the desired temperature of the plastic concrete may be obtained by heating the mixing water only, unless otherwise ordered by the Engineer or the Engineer's representative. When the air temperature is below 32^0F, or whenever ordered, both mixing water and aggregates shall be heated as herein specified.

For additional requirements to permit the placement of concrete base, curb and sidewalks during cold weather conditions, see Section 9.04 - Allowance for Anti-freeze Additive in Concrete.

All water used for mixing concrete shall be heated to a temperature of at least 70^0 Fahrenheit but not over 180^0 Fahrenheit. Aggregates shall be heated either by steam or by dry heat to a temperature of at least 40^0 Fahrenheit but not over 100^0 Fahrenheit. To avoid the possibility of flash set, when water is heated to a temperature in excess of 100^0 Fahrenheit, water and aggregate shall be mixed together in the mixer in such a way that the high temperature of the water is reduced before cement is added. The heating equipment shall be such as to heat the mass uniformly and preclude the possibility of the occurrence of hot spots which will overheat the material.

(C) BATCHING

All plants shall be equipped with an approved automatic weighing, cycling and monitoring system installed as part of the batching equipment, unless otherwise indicated in the specifications, on the plans or in the proposal. The system shall include equipment for accurately proportioning the various components of the mixture by weight, or by volume for admixtures and water, in the proper order and shall include equipment for controlling the cycle sequence. In addition, timing of the mixing operations for central mix plants shall be required. The automatic proportioning system shall be capable of consistently delivering each constituent within the tolerances indicated in Table 3.05—VII, Batching Tolerances. The system shall be designed so that the only manual operation(s) required to produce a preprogrammed batch within these specifications shall be a switch or button to initiate the batching sequence and discharge the completed batch.

There shall be auxiliary interlock cutoff circuits to interrupt and stop the automatic batching operations whenever an error exceeding the acceptable tolerance occurs in proportioning for all material components except water. DDC's Director of Quality Assurance or the Director's representative may require the locking or sealing of any automated proportioning equipment that may be manually manipulated.

When the aggregate sizes are weighed cumulatively, the tolerance for each bin draw weight shall be based on the total aggregate batch weight. If aggregate sizes are weighed separately, the percentage shall apply to each scale weight. When a pozzolan is weighed cumulatively with the cement, the pozzolan shall be last in the weighing sequence and the tolerance for each material draw weight shall be based upon the total weight of cement plus pozzolan. The electrical circuits used to check delivery tolerances may be set at any span within the full allowable tolerance for

any approved batch size. For plants not equipped to automatically adjust tolerances, the tolerance span shall be set for the minimum approved batch size wherever varying batch sizes are being produced.

The system shall be interlocked during the batching of cement and aggregates so that:

1. No inlet gate can be opened while the weigh hopper discharge gate is open.
2. No weigh hopper discharge gate can be opened:
   (a) While the hopper is being filled.
   (b) Until the full batch weight is within the delivery tolerance.
3. No new batch can be weighed until the hopper is entirely empty of the previous batch and the scale has returned to zero.

When manual batching is permitted, the constituents shall be batched within the indicated delivery tolerances for the automatic proportioning system.

TABLE 3.05-VII
BATCHING TOLERANCES

Cement & Pozzolan Aggregate	± 1% (by weight)
Water (Note 1) Admixtures	± 2% (by weight)
	± 1% (by weight or volume)
	± 3% (by weight or volume or ± 1 oz.(Note 3), whichever is greater)
Zero Return (Aggregate)(Note 2)	± 2%
Zero Return (Cement & Pozzolan) (Note 2)	± 1%
Zero Return (Water)(Note 1, 2)	± 1%

NOTES: 1: Tolerance applies to water added at central mix plants only.
2: Zero Tolerance is based on the minimum allowable batch size.
3: Based on the preprogrammed target quantity.

(D) ADMIXTURE DISPENSING SYSTEMS

Plants shall be equipped with the number of dispensing systems necessary to incorporate the required admixtures into the concrete. At least two admixture dispensing systems shall be required for plants supplying structural concrete. These systems shall be capable of accurate measurement within the tolerance limits specified in Table 3.05-VII, Batching Tolerances. The measuring devices shall be equipped with a bypass valve suitable for obtaining a calibrated sample of admixture. Admixtures shall be dispensed in a manner that shall insure uniform distribution of the material throughout the mixture within the specified mixing period. When multiple admixtures are added to the concrete, they shall not come in direct contact with each other prior to mixing. Plants equipped with automatic proportioning systems shall include an approved automatic mechanical admixture dispensing system. The dispensing system shall consist of a volumetric measuring device, interlocked with the plant automated proportioning equipment in such a manner that will positively insure that the quantity of admixture preset into the

system has been actually measured and completely discharged. The admixture system shall be interlocked with the automated system so that:

1. Aggregate and/or cement weigh hopper discharge gates cannot be opened until the preset quantity of admixture has been satisfactorily batched or discharged.
2. The recordation of the presence of admixture shall be dependent upon the completion of the admixture discharge.

All plants shall provide at the operator's normal work station readable indication of the actual quantity of admixture batched.

(E) RECORDING OF BATCHING

All concrete batching plants equipped with automatic proportion systems shall have digital recording instruments approved by DDC's Director of Quality Assurance and shall be so located as to be readily accessible and readable to the operator from their normal work station. The recording instruments shall be designed to record the quantities of each aggregate component, cement, pozzolan (when used), water (at central mix plants) and the presence of admixture for each batch of concrete produced. All records of batches shall show the batch number, the day, the month, year, and time of day to the nearest minute for each batch and they shall be imprinted on the record so that each batch may be permanently identified. The Department shall be provided with a clear and legible copy of all batch records.

Cement, pozzolan and aggregate component weights quantities shall be recorded separately. Water at central mix plants may be recorded by weight or volume.

Weights and/or volumes shall be recorded as indicated on the batching scale or meter within an accuracy of $\pm$1 scale or meter gradation. The minimum recorder resolution shall be equivalent to or less than the minimum gradation on the scale or meter, unless otherwise approved by the Director of QA.

When the automation system is capable of producing other than standard size batches (full, half or quarter cubic yard increments), the recordation requirements shall be in accordance with written directives from the Director of QA.

On automation systems installed on or after January 2, 1987, a clear and identifiable indication shall appear on the recordation, whenever a batch is initiated without all conditions being satisfied for fully automated production under these specifications or a system is taken out of the fully automated mode during the batching sequence.

Each plant site shall be equipped with an approved instrument capable of automatically applying a time-date stamp to each delivery ticket as the delivery vehicle departs from the plant site.

(F) FAILURE OF AUTOMATIC BATCHING, ADMIXTURE DISPENSING AND RECORDING EQUIPMENT

If at any time the automatic proportioning, admixture dispensing or recording instruments become inoperative, the plant may be allowed, with the approval of DDC's Director of Quality Assurance, or the Director's representative, to batch and mix concrete mixtures for a period not exceeding 48 hours from the time of breakdown. Written permission of the Director of Quality Assurance, will be

required to operate without these instruments for periods longer than 48 hours.

3.05.8. CONCRETE MIXING, TRANSPORTING AND DISCHARGING.

(A) GENERAL

Concrete may be mixed at a central plant, in truck mixers or at the site as described in these specifications. When mixed at a central plant, the concrete shall be transported in vehicles acceptable to the NYSDOT. All concrete shall be discharged from the discharge openings directly into the forms or into approved conveyance equipment while fresh and before there is evidence of initial set. No retempering of the concrete will be permitted. Retempering is defined as the addition of water after the mix has attained its desired initial slump. Temperature of the concrete mixture upon discharge shall not exceed 90° Fahrenheit.

The Contractor shall supply concrete at a rate consistent with placement operations as determined by the Engineer. The Engineer, or its representative, may discontinue the use of any type of concrete mixing or transporting units when unsatisfactory results are obtained. The requirements of this section shall apply unless otherwise stated in the specific item.

A summary of time limitations for the various types of Portland Cement concrete mixing equipment from the beginning of batching to the completion of discharge is given to Table 3.05-X, Summary of Concrete Batching, Mixing, Hauling and Discharging.

(B) CONCRETE UNIFORMITY

Mixing shall be performed in an approved mixer capable of combining aggregates, cement, water and admixtures into a thoroughly mixed and uniform mass within the specified mixing period, and discharging the mixture without segregation. Each mixer shall display, in a clearly visible location, a manufacturer's supplied plate(s) stating the capacity of the mixer and the recommended drum speeds for each operation.

All concrete produced shall meet the uniformity requirements in Table 3.05-VIII, Concrete Uniformity. Tests shall be performed by the Department when required by the specifications or requested by the Engineer. It will not be necessary to verify that mixing equipment meets the uniformity requirement unless evidence of non-uniform concrete is found or unless the Contractor requests a reduced mixing time for central mixers. In order to obtain uniformity the Contractor may reduce the batch size below the rated mixer capacity or reduce the mixing speed tolerance limit.

(C) CENTRAL MIXED CONCRETE

Central mixed concrete is defined as concrete mixed in a stationary mixer and transported in approved agitating or non-agitating units to the point of deposition. Central mixed concrete may be used for mixing all concrete mixtures unless otherwise specified on the plans or in the proposal. Batch sizes for any mixer shall be no larger than the rated capacity of the drum indicated on the manufacturer's plate.

Mixing units shall be equipped with an acceptable timing device that will not permit a batch of concrete to be discharged until the specified mixing time has elapsed. Mixing units and control devices will be disapproved by DDC's Director of Quality

Assurance (QA), or the Director's representative if at any time they are found unfit to function properly. When the blades inside the drum have become loose, broken, bent, scalloped or worn away 20 percent in any dimension, they shall be properly repaired or replaced.

The constituents of the concrete mix shall be charged into the mixer in a manner approved by the Director of QA or the Director's representative. The minimum mixing time after all materials are in the drum shall be 90 seconds, unless it can be demonstrated through tests that uniformity of the concrete meeting the requirements of Table 3.05-VIII, Concrete Uniformity, can consistently be obtained at lesser time as approved by the Director of QA. Central mixers shall discharge the entire batch in an unrestricted manner into a hopper or directly into a delivery unit. The delivery unit shall transport the thoroughly mixed concrete to the point of use without loss of uniformity. Each delivery unit must be approved by the Director of QA or the Director's representative prior to use and subjected to frequent inspections during its use. If found unfit, it will be disapproved until the proper operating condition has been restored. Both the agitating and non-agitating delivery units shall be completely emptied, clean and free from concrete and wash water before receiving the next load of concrete.

Delivery agitating units shall rotate at a drum speed of 2 to 6 revolutions per minute unless otherwise approved by the Director of QA. Agitating units shall conform to the requirements for truck mixers under Subsection 3.05.8.(E), Truck Mixed Concrete, as they pertain to operating condition and condition of the drum. When central mixed concrete is transported in units approved for truck mixing, a minimum of 90 percent of the design water shall be added to the mix by the batch plant water system. The addition of water to obtain initial slump will be permitted at the work site in not more than two additions. After each addition, the concrete shall be mixed at least 30 revolutions in accordance to truck mix requirements before discharging.

The haul road used by non-agitating concrete delivery units shall be free from holes washboarding or any other features that would cause segregation in the mix. In addition, non-agitating concrete delivery units shall have cover, when ordered by the Engineer, to protect the concrete from adverse drying conditions and precipitation.

TABLE 3.05-VIII
CONCRETE UNIFORMITY

Test	Permissible Variation concrete samples taken at two locations in the batch
1. Weight per cubic foot calculated to an Air-Free Basis	2.0 lbs. per C.F.
2. Air Content, % by volume of concrete	1.0 percent
3. Slump:	
Average slump 4 inches or less	1.0 inches
Average slump greater than 4 inches	1.5 inches
4. Coarse aggregate content, portion by weight of each sample retained on a No. 4 sieve	6.0 percent
5. Unit weight of air-free mortars based on average for all comparative samples tested	1.6 percent
6. Average compressive strength of 7 days for each sample based on average strength of all comparative test specimens	10.0 percent

NOTE: Samples shall be taken at the point of discharge of the concrete mixer. Sampling and testing procedures shall be as approved by the DDC's Director of Quality Assurance.

The time interval between completion of mixing at the central mix plant and completion of discharge shall be as noted in Table 3.05-IX, Time Limits for Delivery of Central Mixed Concrete.

TABLE 3.05-IX
TIME LIMITS FOR DELIVERY OF CENTRAL MIXED CONCRETE

Delivery Unit	Type of Placement	Maximum Time Minutes	Notes
Non-agitating including all open top units	All	30	
Agitating – rotating drum	Structural	90	1
Agitating – rotating drum	Pavement	60	1 & 2

NOTE 1. The concrete will be rejected if there is evidence of setting up in the mixer. The Engineer may reduce the total time limit in hot weather or under unusual conditions if unsatisfactory results are obtained.

NOTE 2. The Engineer may increase the allowable time to 90 minutes maximum for small or irregular sections of pavements where placing and finishing operations can be completed rapidly.

(D) TRANSIT MIXED CONCRETE

Transit mixed concrete is defined as concrete mixed completely in a truck mixer; mixing may occur at the following locations or combinations thereof: at the plant, while in transit, or at the point of deposition. Transit Mix may be used for all concrete items unless otherwise specified on the plans or in the proposal.

The truck mixer shall be the inclined axis rotating drum type equipped with a water tank(s) and water system having a measuring a device to measure water (U.S. gallons) introduced into the drum within an accuracy of two percent. In addition, each truck mixer shall be equipped with a hatch in the periphery of the drum shell of such design as to permit access to the inside of the drum for inspection.

Each truck mixer used for transit mixed concrete shall be equipped with an approved electrical revolution-counting device mounted in a clearly visible position.

The device shall show on separate counters (1) the number of drum revolutions at speeds within the mixing range and (2) the total number of drum revolutions. Both counters shall be legible to one revolution and shall be designed to accept a non-standard electric plug for resetting each counter to read zero at the time of loading at the batch plant. The revolution counting device shall be tamperproof such that if tampering occurs the counters will become inoperative or the device will otherwise indicate tampering including the interruption of electric power.

The revolution counting device shall be installed to count the number of revolutions of the drum in the direction of mixing. The device shall be adjusted so that it counts the number of revolutions specified for the mixing and agitating drum speed within the tolerances indicated on the manufacturers rating plate, but not to exceed the following requirements for truck mixers:

Mixing - 6 RPM minimum to 18 RPM maximum
Agitating - 2 RPM minimum to 6 RPM maximum

These limits may be adjusted for individual mixing units upon approval of the DDC's Director of Quality Assurance (QA).

Each truck mixer unit shall be inspected and approved annually by the Director or QA or the Director's representative for use in Department work. During its use, additional inspections will be made by the Director of QA or the Director's representative to determine the operating condition of the equipment. Whenever improper conditions exist, the truck mixer unit shall be satisfactorily repaired or replaced. This will include blades inside the drum which have become heavily caked with mortar, loose, broken, bent, scalloped, worn 20 percent in any dimension or otherwise damaged.

Truck mixers will not be permitted to mix concrete batches having volumes greater than the maximum cubic yard capacity indicated on the manufacture's rating plate(s). The drum shall be drained of wash water before charging with the constituents of the concrete mixture, and the drum shall be revolving during loading.

Approximately 90% of the design water shall be added to the mix in a manner approved by the Director of Quality Assurance, by either a batch plant water system or from the water supply carried on the truck.

Mixing shall begin not more than 5 minutes after cement has made contact with the aggregates. The load shall be mixed from 70 to 100 drum revolutions and then checked for consistency. If the truck is enroute to the project, the mixer speed shall be changed to agitating speed after 70 to 100 mixing revolutions. Under no circumstances shall the mixer drum be stopped.

Water may be added to the mixture in not more than two additions at the point of deposition before discharge to obtain initial slump. After each such addition the concrete shall be mixed at least 30 revolutions in the mixing speed range. The total number of revolutions in the mixing range shall not be less than 100 nor more than 160.

After completion of mixing, discharging may begin immediately, otherwise the mixer shall be revolved at agitating speed. Once discharge has commenced, the entire load shall be discharged in not more than 50 minutes.

Concrete shall be discharged through a completely opened discharge gate providing unrestricted flow. The discharge area or gate shall remain fully open throughout the discharge period and the rate of discharge shall be controlled by the speed of the drum.

The total time interval from the moment the cement makes contact with the aggregates to the completion of discharge shall not exceed 90 minutes for structural concrete placements and 60 minutes for pavement concrete placements. The Engineer may increase the allowable time for pavement placements to 90 minutes maximum for small or irregular sections where placing and finishing operations can be completed rapidly. The Assistant Commissioner, Construction or their representative may reduce the total time limit in hot weather or under unusual conditions, if unsatisfactory results are obtained.

(E) TRUCK MIXED CONCRETE

Truck mixed concrete is defined as concrete mixed completely in a truck mixer following the addition of mixing water at the point of deposition. The requirements of Subsection 3.05.8.(D), Transit Mixed Concrete, apply except as modified:

1. Each truck mixer shall have an approved revolution counter located in a position readily visible to the Engineer. The electrical revolution counting device will not be required but it may be used to count the number of revolutions of the drum in the direction of mixing.

2. The loading of the mixers shall be performed in the following manner:

   a. Regular Truck Mix (cement in contact with moist aggregates). The drum many be rocked or revolved during the charging of coarse and/or fine aggregates with admixtures. Cement shall be charged last and the drum shall be stationary until mixing begins. Mixing shall begin no longer than 30 minutes after cement comes in contact with the aggregate.

   b. Layered Truck Mix (cement in contact with saturated surface dry or drier coarse aggregate). Fine aggregate with admixtures, coarse aggregate and cement that have been separately batched shall be charged through a hatch in the side of the drum in the following sequence: fine aggregate with admixtures, coarse aggregate and then cement. The drum may be rocked after the addition of each aggregate size and shall remain stationary while charging the cement and until mixing begins. Mixing shall begin no longer

than 90 minutes after cement comes in contact with the coarse aggregate.

3. Mixing shall begin at the point of deposition after the addition of water. The water shall be introduced into the drum either from the head section or by dual injection from both the head and discharge section. The mixing shall continue for a minimum of 100 revolutions or until uniform concrete of the required consistency is produced whichever is longer. The mixing period shall not exceed 15 minutes.

4. The entire load shall be discharged within 30 minutes after mixing has been completed.

TABLE 3.05-X
SUMMARY OF CONCRETE BATCHING, MIXING, HAULING AND DISCHARGING

Central Mixed Concrete	Transit Mixed Concrete	Truck Mixing Concrete	
	Requires electric revolution counting device	Regular Truck Mix	Layered Truck Mix
Begin Batching Charge mixer in an approved manner	Begin Batching Materials batch loaded or ribbon loaded thru back	Begin Batching Drum can be rocked or revolved for aggregates	Begin Batching Fine agg. and SSD coarse agg. is loaded thru hatch. Can rock after each fraction
	Add approximately 90% of design water	Drum cannot be moved while cement is added	Drum cannot be moved while cement is added
End of Batching & Begin Mixing 90 Seconds Minimum After all material are in the mixer	Cement In Contact W/Aggs. 5 Minutes Maximum	Cement In Contact W/Aggs. 30 Minutes Maximum	Cement In Contact W/Aggs. 90 Minutes Maximum
End of Mixing Open Haul Units: 30 Minutes Maximum; Rotating Drum Agitators 2-6 rpm: 60 Mins. Max. (Pav't); 90 Mins. Max. (Struct.)	Beginning of Mixing At plant or in transit 100 revs Minimum 160 revs Maximum Mix: 6-18 rpm	Beginning of Mixing At project, after the addition of water 100 revs Minimum 15 Minutes Maximum Mix: 6-18 rpm	Beginning of Mixing At project, after the addition of water 100 revs Minimum 15 Minutes Maximum Mix: 6-18 rpm
	End of Mixing Agitate 2-6 rpm Beginning of Discharge 50 Minutes Maximum	End of Mixing 30 Minutes Maximum Agitate 2-6 rpm	End of Mixing 30 Minutes Maximum Agitate 2-6 rpm
Completion of Discharge When concrete is transported in units approved for mixing, the remainder of the design water may be added at the work site to attain initial slump.	Completion of Discharge The remainder of the design water may be added at the work site to attain initial slump.	Completion of Discharge	Completion of Discharge

(F) MOBILE CONCRETE MIXING UNITS

A mobile concrete mixing unit, as approved by the Engineer, may be used in miscellaneous work defined as curb, gutter, headwalls, catch basins, manholes, drop inlets, field inlets, sign foundations, lighting structure foundations, anchor units, pullboxes, leveling footings and similar placements.

Each mobile mixing unit shall be self-contained and of the continuous mixing type, capable of carrying sufficient unmixed dry bulk cement, fine and coarse aggregate, water and admixtures to produce on site no less than six (6) cubic yards of concrete.

The mobile mixing unit shall be equipped with proportioning devices which shall deliver the materials within the following tolerances by weight:

Cement	0 to + 4%
Fine Aggregate	± 2%
Coarse Aggregate	± 2%
Water	± 1%
Admixtures	± 3%

The amount of cement being introduced into the mix shall be measured by a meter which is clearly visible and kept clean at all times. The quantity of cement shall be recorded by a ticket printer which shall, as a minimum, record the number of revolution counts of the cement feeder.

The mixers shall provide positive control of the flow of water into the mixing chamber. Water flow shall be indicated by a flow meter and be readily adjustable to provide for minor variations in aggregate moisture. The system shall be equipped with a bypass valve or hose suitable to determine batching accuracy.

The mixers shall be equipped with at least one admixture delivery system. Each system shall provide positive control of the flow of admixture into the unit's mix water system. Flowmeters shall be used to control the amount of admixture added to the mix. Admixtures shall be dispensed in a manner that shall ensure uniform distribution of the material throughout the concrete. The system shall be capable of adding admixture in the amounts necessary to achieve the required air content. The system shall be equipped with a bypass valve suitable for obtaining a calibrated sample of admixture to determine batching accuracy. The mixers shall be capable of combining aggregates, cement, water and admixture into a thoroughly mixed and uniform mass. Discharge of the mixture shall be accomplished without segregation.

When mobile mixing units are permitted, no specific mixing time will be required except that the concrete shall be properly and uniformly mixed as determined by the Engineer. All the constituents of concrete manufactured by a mobile mixing unit shall be stockpiled at the project site unless otherwise approved by the Engineer.

The Contractor shall calibrate the mobile mixing unit and shall provide a record of the calibration of the unit to the Engineer for the mix design to be used. The Engineer will furnish the mix design information and the written calibration procedure to the Contractor. The Department reserves the right to witness the calibration of the mixing unit.

Prior to actual use, the Contractor shall demonstrate, to the Engineer, that the concrete meets the specification requirements for slump, air content and

proportioning. Proportioning may be verified in accordance with written Department procedures.

If, in the opinion of the Engineer, improper conditions exist, the conditions shall be corrected as approved by the Engineer. Improper conditions shall include, but not be limited to, hydrated cement deposits and mixing blades which are loose, broken, bent, scalloped, worn 20 percent in any dimension, or heavily caked with mortar.

If the Engineer determines that the mixer unit is not performing satisfactorily, the Engineer may discontinue use of the unit. The Contractor shall provide the necessary scales, containers and personnel approved by the Engineer to perform calibration of the unit.

(G) SMALL CONSTRUCTION MIXERS

In work involving small quantities of concrete, the Engineer may permit a small construction mixer. The mixer shall be capable of producing concrete having the specified slump and air content. Any concrete placed under such conditions shall be mixed no less than 90 seconds after all the materials are in the mixer drum.

The use of a small construction mixer shall not be permitted for the flood protection system and marine structures.

3.05.9. TEMPERATURE OF CONCRETE.

The concrete at the time of pouring shall be maintained at a temperature of not less than 50° F nor more than 90° F.

When the air temperature exceeds 85° F, the concrete subsequent to initial set shall be protected for three (3) days after pouring so as to prevent it from going above 90° F.

When the air temperature is less than 38° F in the shade the Contractor may submit, to the Engineer for approval, proposed methods for placing and protecting concrete in the cold. At such temperatures concrete shall be poured only with the approval of the Engineer and shall be adequately protected.

If the air temperature falls below 50° F, an accelerator may be used. If the air temperature exceeds 85° F, a retarder may be used. Accelerators and retarders must be approved by the Engineer before use.

3.05.10. QUALITY CONTROL PROCEDURES.

The quality control procedures used for on-site inspection, sampling and testing of Portland cement concrete shall conform to those procedures described in the Department's Materials Method 9.2 - Field Inspection of Portland Cement Concrete.

3.05.11. MEASUREMENT AND PAYMENT

No separate or additional payment will be made for compliance with the requirements of this Section.

END OF SECTION

SECTION ESCR-4 – MOVABLE TL4 STAINLESS STEEL JERSEY BARRIER

4.01.2. INTENT.

The movable barrier system shall be used to protect the floodgates (in their open position) at the floodgate crossings at the northbound and southbound FDR Drive.

4.01.3. DESCRIPTION.

The TL4 movable steel barrier system shall be a longitudinal barrier, as defined in the AASHTO Roadside Design Guide, Test Level 4 Steel Barriers and shall be a lightweight, stainless steel, and easily transportable road and bridge barrier system developed to provide full TL4 Minimal Deflection impact protection. A suitable wheel system shall be integrated with the barrier to permit easy removal of the barrier system from the pathway of the floodgates when they need to be deployed. The movable barrier, when anchored into the roadway, shall keep traffic from hitting the floodgate (in its open position). The movable barrier shall meet the criteria set forth for Longitudinal Barriers in the National Cooperative Highway Research Program Report MASH at Test Levels 4.

4.01.4. MATERIALS.

(A) The jersey barrier base shall be stainless steel grade 316.

(B) HARDWARE

All steel clamp plates, supports, splice plates, and panels shall be stainless steel grade 316.

(C) FASTENERS

All fasteners shall be austenitic stainless steel grade 316 fasteners, A4 quality, resistance class - 80.

4.01.5. SUBMITTALS.

(A) Shop drawings for the barrier system, including all inserts and anchors required on the roadway.

(B) Certification that the barrier system provides impact protection for TL4.

4.01.6. DESIGN.

(A) BARRIER

The movable barrier system shall be meet the performance specified herein and the dimensional requirements on the Contract Drawings. The movable barrier shall meet the criteria set forth for Longitudinal Barriers in the National Cooperative Highway Research Program Report MASH at Test Levels 4 and provides full TL4 Minimal Deflection impact protection

The movable barrier shall be a longitudinal barrier composed of standard segment lengths (no longer than 20 ft) with a total height of 50.5 in. (including a 12 in. high top rail attachment) and a base width of 19 in. Each barrier segment shall be designed so that it can be easily disconnected from adjacent barrier segments facilitating replacement of damaged sections of the barrier. Each barrier segment shall have the ability to be removed individually without having to remove adjacent barriers from the beginning or end of the barrier run.

In case of a vehicle impact into the barrier, the barrier shall be designed so that the impact energy will dissipate while also minimizing the forces experienced by the surface it is attached to.

The barrier profile dimensions shall be between the conventional dimensions of a New Jersey shape and F-shape barrier with a system height of 50.5 in.

The barrier system shall weigh no more than 65 lbs per foot without its wheel system and require no through deck anchoring.

The front part of the barrier segment shall be an edged steel plate with a minimum thickness of 0.10 inches. The base of the steel barrier segments shall be attached to the concrete surface by means of a minimum of 2 connecting anchors. The 2 connecting anchors shall screw into a recessed flush mounted canister that is embedded and bonded into the concrete roadway surface. The canister shall be sized for the intended loads on the barrier.

The front of the barrier shall have two horizontal corrugations to reinforce the barriers torsional rigidity strength and to provide energy absorption during impacts by allowing the corrugations to flatten.

The barrier segment shall have easy access ports to allow for anchoring the barrier to the surface as well as for connecting and disconnecting adjacent barrier segments.

Each barrier shall have two 12 in. tall pedestals attached to the top of each standard steel barrier segment. Individual pipes, approximately 236 in. in length and 3 in. in diameter, shall be screwed in place through the pedestal top into a connecting sleeve allowing for the tube to form a continuous lineal run along the top of the barrier. The tube shall function as an additional reinforcement keeping vehicles in an upright position during and collision reducing the vehicles intrusion into the opposite side of the barrier and or reduce the risk of collision with a fixed object behind the barrier.

(B) WHEEL ASSEMBLY

The barrier shall be equipped with a mechanical scissor lift wheel assembly allowing the barrier to be lifted using a cordless drill with attached ¾ in. socket or a manual crank /jack handle.

The lifting mechanism shall be concealed behind the barrier. The front of the barrier shall have ports that open allowing the wheel assembly to open up and extend the scissor lift out and lift the barrier up off the ground once the pillar bolts are removed. When the barrier is lifted, the wheel assembly shall allow the barrier to be easily relocated by manually pushing or pulling the barrier.

The barrier sections shall have two scissor wheel assemblies at each end of the barrier. The wheel assembly shall be designed so that one person may be able to manually lift the barrier allowing for displacement. Maximum length of barrier section with wheel assemblies is 20 ft.

4.01.7. METHODS.

The barrier system shall be assembled and installed in accordance with the manufacturer’s instructions.

Manufacturer of the barrier system shall provide the necessary training and instructions for the operation of the barriers to the agency responsible for the maintenance and operation of the barrier system.

Manufacturers: MDS Barriers, or approved equal.

4.01.8. MEASUREMENT.

The quantity of barrier to be measured for payment shall be the number of linear feet, measured to the nearest tenth (0.1) of a foot, of the actual barrier, installed to the satisfaction of the Engineer. No payment or allowance will be made for barriers placed beyond the limits specified or any hardware that may extend past the face of the barrier.

4.01.9. PRICE TO COVER.

The contract unit price shall cover the cost of all labor, materials, plant, equipment, insurance, samples, training, and incidentals required to furnish and install the movable barrier, complete, in full compliance with the requirements of the specifications.

Payment will be made under:

Item No.	Item	Pay Unit
ESCR-4	MOVABLE TL4 STAINLESS STEEL JERSEY BARRIER	L.F.

END OF SECTION

SECTION ESCR-4.06 – CONCRETE IN STRUCTURES

4.06.01 INTENT.

This section describes Concrete in Structures to be used in the esplanade, cut-off wall, floodwall, floodgate foundations, Williamsburg Bridge security bollards and wall, light pole foundations, retaining walls, retaining wall foundations, seatwall foundations, seawall cap, and other miscellaneous park walls, curbs, seatwalls and features.

4.06.02 DESCRIPTION.

Concrete in Structures under this section shall refer to all concrete in structures and park features excluding steel faced-curbs, sidewalks, approach slabs, and base for pavement of city roadways within the project area. Finish, color and design shall be as specified.

4.06.03 MATERIALS.

(A) Concrete for deposit as a concrete structure shall comply with the requirements of Section ESCR-3.05, Concrete, and be of the class, type and method of mixing specified. Coarse aggregate shall be of the type, grade, size number and nominal size specified. Rubble aggregate shall be used when specified or shown on the Contract Drawings.

Where concrete is specified to be lightweight, the aggregate shall be in conformance with the requirements of ASTM designation C 330, Lightweight Aggregates for Structural Concrete, and the Contractor shall design the mix for a unit weight of one hundred and twenty (120) pounds per cubic foot.

(B) The following concrete classes, as described in ESCR-3.05, Concrete shall be used unless otherwise noted on the plans and details:

Element	Concrete Class
Park features (retaining walls, park walls, curbs, and other misc. features)	A-40
Retaining wall along the FDR Drive, Seatwalls	A-40
Floodwall and flood gate column/foundations, and Williamsburg Bridge Concrete security wall	Flood protection system
Esplanade (Cut-off walls, esplanade pile caps, decking, retaining walls, planks/girders, light pole foundations, and other misc. structural elements on the esplanade)	Marine or Esplanade structures
Utility crossing and gate seepage wall closure pours	B-32

(C) Concrete reinforcement shall comply with the requirements of the following sections:

Steel Bars--Section 2.23

Welded Steel Wire Fabric--Section 2.25

Kind of reinforcement, size and placement shall be as specified and as shown on Contract Drawings. Reinforcement shall be installed in accordance with the requirements of Section ESCR-4.14 Steel Reinforcement in Concrete.

(D) Elastic Type Concrete Expansion Joint Sealer shall comply with the requirements of Section 2.22, type as specified.

(E) Preformed Expansion Joint Filler shall comply with the requirements of Section 2.15, type as specified.

4.06.04 SUBMITTALS

(A) CONCRETE MIX DESIGN

Concrete mix design with product and test data demonstrating compliance with Section ESCR-3.05, Concrete.

Concrete mix design shall indicate strength and type of concrete; materials, type, brand and amounts of material constituents, including but not limited to cement, pozzolans, admixtures and applicable reference specifications.

Re-qualifications of materials or mix proportions required as a result of changes, test failures, or failure to gain initial approval for any reason.

(B) CERTIFICATES

1. Cement – supplier's certified mill reports for cement produced within 30 days of the project start date and every other mill report thereafter throughout the project.
2. Fly Ash – supplier's certified mill reports for fly ash produced within 60 days of the project start date and every other mill report thereafter through the project finish date.
3. Slag – supplier's mill reports for fly ash produced within 60 days of the project start date and every other mill report thereafter through the project finish date.
4. Admixtures – manufacturer's letter of certification, signed by a duly authorized manufacturer's representative, dated not less than 30 days from the project start date, and manufacturer's product data
5. Aggregate – supplier's test reports generated within one year of the project start date showing evaluation and compliance of product in accordance with the specification requirements of ASTM C33.
6. Water – supplier's test reports generated within three months of the project start date showing evaluation and compliance of product in accordance with the specification requirements of ASTM 1602.
7. Certified test reports for field cured cylinders, as required for removal of forms
8. Certified test reports for cores and/or load tests
9. Manufacturers' certification of compliance with specified materials and products
10. Mill Test Certificates for steel reinforcement
11. Certified Test Data and reports for materials and compressive strengths of mix designs

(C) CONCRETE PLACEMENT PLAN

Concrete placement plan, including procedure for bending or straightening reinforcement in the field, plan for mixing, transporting, conveying, placing, finishing, and curing concrete, procedure for placement of concrete underwater, procedure for repair of defects, and mechanical splicing procedures.

(D) SHOP DRAWINGS

1. Shop Drawings and required structural computations for formwork for elevated beams and slabs as applicable.
2. Plans and procedures for reshoring.
3. Shop Drawings for Steel Reinforcement.
4. Shop Drawings for concrete park feature elements. Shop drawings shall include:
    a. plans, elevations including weep hole location for entire length of wall including all radial sections, sections, details, anchoring and connecting hardware, finishes, skateboard abatement, construction joints, expansion joints and waterstops. Details shall indicate all edge corners including bullnose radii. Detail custom conditions at all radial walls.
    b. Shop drawings to include but not limited to the following locations: Concrete Stair – 10th Street Playground, Outdoor Classroom Seating – Fire Boat House, CIP Concrete Amphitheater Stage, CIP Concrete Wall at Amphitheater, CIP Concrete Wall at Baseball Backstop, CIP Concrete Retaining Wall at Fire Boat House, CIP Concrete Retaining Wall at Maintenance Yard, CIP Concrete Retaining Wall at Maintenance Yard – Low Height, CIP Concrete Retaining Wall at 10th Street Playground, and CIP Concrete Retaining Wall at North Park Entry.
5. Locations of Construction Joints, expansion joints, and waterstops.
6. Engineer's approval of Shop Drawings shall not relieve the Contractor of the responsibility for any errors, or for furnishing materials of the proper size, quality and quantity.
7. Locations of conduit runs, pipes, and all other inserts or openings in concrete elements.
8. Record Drawings

(F) TEST AND SAMPLING DATA

Provide all test and sampling data as per Section ESCR-3.05, Section 5.02**,** and specified herein.

(G) MOCK-UP FOR CONCRETE WORK FOR PARK FEATURES:

After all samples, product data, and the shop drawings are approved, construct mock-ups for the locations listed below in a location approved by the Engineer and as described below.

Mock-up locations are as follows:

1. Concrete Stair – 10th Street Playground
2. Outdoor Classroom Seating – Fire Boat House
3. CIP Concrete Amphitheater Stage
4. CIP Concrete Wall at Amphitheater
5. CIP Concrete Wall at Baseball Backstop
6. CIP Concrete Retaining Wall at Fire Boat House
7. CIP Concrete Retaining Wall at Maintenance Yard
8. CIP Concrete Retaining Wall at Maintenance Yard – Low Height
9. CIP Concrete Retaining Wall at 10th Street Playground

10. CIP Concrete Retaining Wall at North Park Entry

Mock-ups shall consist of the following:

- Foundation of a size and reinforcement adequate to support the work at the designated location.
  - Scope of Mock-up**:**
    - One vertical construction joint in wall.
    - Include any embeds as they would be required for wall construction and cast-in elevation markings as shown on Drawings.
    - Include typical wall elevation and transition and any jointing necessary for the transition
    - Include typical step down wall

- Reinforce as in a similar detail on the drawings and add necessary reinforcing and/or supports to maintain stability of the mockup.
- Use approved reinforcement and accessories and assemble formwork using methods as intended for construction and to achieve the specified requirements.
- Place concrete with methods to be used in construction, including anticipated time delays between placements. Place concrete to achieve the specified requirements.
- Finish exposed surfaces of the walls with specified finish treatments when directed by the Engineer.
- Use approved concrete design mixes, inclusive of specified admixtures, for the mock-ups as will be used in the construction of the formed surfaces.
  If mock-ups do not meet the specified quality and are not approved, remove and replace in full or in part at no additional cost. Mock-ups shall be located so they will remain throughout construction. Protect mock-up from damage. Remove mock-up only when directed by the Engineer.

4.06.05 DESIGN AND CONSTRUCTION OF FORMS.

(A) Forms shall accurately conform to the shape, lines and dimensions of the structure for which they are required, be substantial and sufficiently tight to prevent leakage of mortar, and have, unless otherwise specified by the Engineer, moldings or chamfer strips at angles. They shall be of adequate strength and be braced or tied together with approved ties and spacers, so as to maintain position and shape, and to insure the safety of workmen and passersby, be clean and free from sawdust, chips, dirt, ice and other objectionable materials. Forms shall present smooth, true surfaces to the concrete placed against them, having temporary openings where necessary, to facilitate cleaning and inspection immediately before concrete is deposited. Forms shall be coated with non-staining oil before the reinforcement is placed, or be wetted except in freezing weather.

(B) Except in cases of curved, special, and exposed surfaces, the lumber for concrete forms, after being planed, shall be not less than one and one-sixteenth (1-1/16”) inches in actual thickness, shall be dressed on both surfaces, shall be tongued and grooved and shall be constructed so as to produce mortar tight joints. Plywood or other approved material shall be used on all exposed concrete surfaces, and lumber used in conjunction with it may be less than one and one-sixteenth (1-1/16”) inches, if approved by the Engineer.

(C) The metal used for forms shall be of such thickness that the forms shall remain true to shape. All bolt and rivet heads shall be countersunk. Clamps, pins, or other connecting devices shall be designed to hold the forms rigidly together and to allow removal without injury to the concrete. Metal forms which do not present a smooth surface or line up properly shall not be used. Special care shall be exercised to keep metal forms free from rust, grease, or foreign matter, such as will tend to discolor the concrete.

(D) If required, the Contractor shall submit details of the forms the Contractor proposes to use to the Engineer for approval before the Contractor starts their construction.

(E) Any metal ties or anchorages which are required within the forms to hold them to correct alignment and location shall be so constructed that the metal work can be removed to a depth of at least one (1”) inch from the face surface of the concrete without injury to such surface by spalling or otherwise. Wire ties shall not be used unless permitted by the Engineer. All cavities produced by the removal of metal ties shall be filled carefully with a mortar of fine aggregate and cement in the proportion that has been employed for the particular class of concrete treated and the surface left smooth and even and uniform in color.

4.06.06 EXPANSION JOINTS AND WATERSTOPS.

Expansion and construction joints shall be provided of the shape, in the manner, and at the intervals required as shown on the Contract Drawings.

When concrete is to be placed against a joint filler, holes or joints in the filler shall be suitably filled with mastic to prevent mortar or concrete from entering the joint and restricting its movement. The face edges of all joints shall be carefully finished or formed true to line and elevation for a minimum distance of 2 in. back from all exposed surfaces.

When caulking compound is used to seal a joint containing premolded bituminous joint fillers, a layer of an approved type of pressure-sensitive release tape shall be placed between these materials due to incompatibility.

Waterstops shall be installed in the the joints of floodwalls and esplanade walls to provide for expansion and contraction movements at joints. Place waterstop at all joints exposed to view, as shown on the Contract Drawings, or as directed by the Engineer. Waterstop shall be polyvinyl chloride or other approved flexible material, or the type indicated on the Contract Drawings. The waterstop shall extend at least 3 inches into the concrete on each side of the joint, shall be joined continuous and watertight, and shall be carefully protected from damage until covered by concrete or backfill.

4.06.07 CONVEYING.

(A) LOSS OF INGREDIENTS

Concrete shall be conveyed rapidly from the job-mixer or transporting vehicles to the place of final deposit by approved methods which will prevent loss of ingredients.

(B) CONVEYORS

Concrete shall be conveyed by chutes, pipes, buckets, tremies, buggies, wheelbarrows, or other approved conveyors.

(C) CLEANING

When required, all conveyors shall be thoroughly cleaned and flushed with water which shall not fall on concrete in place.

(D) CHUTES

Chutes shall be of metal or metal-lined. They shall have a slope not flatter than one vertical to two horizontal and shall deliver concrete in a practically continuous flow. Concrete shall be discharged into hoppers when the depositing is intermittent.

(E) LONG CHUTES

The use of long chutes is prohibited (a) generally, unless permitted under circumstances and in accordance with conditions prescribed by the Engineer, and (b) specifically, when the concrete is incorporated in structures which will be subject to salt water action.

(F) PIPES

When concrete is conveyed through pipes, the pipes shall be kept full of concrete and have discharge ends kept buried in the fresh concrete, unless otherwise permitted.

(G) BOTTOM DUMP BUCKETS

When concrete is placed by means of a bottom dump bucket, the buckets shall have a capacity of not less than one-half (1/2) cubic yard. In depositing concrete from such a bucket, the bucket shall be lowered gradually and carefully until it rests upon the concrete already placed. It shall then be raised very slowly during the discharge travel.

(H) BUGGIES OR WHEELBARROWS

Buggies or wheelbarrows shall travel on runways which have smooth surfaces.

4.06.08 DEPOSITING.

(A) DEPOSITING ON SURFACES

Concrete shall be deposited on surfaces free from standing water, dirt, shavings, sawdust, ice or other undesirable matter. Where necessary to deposit on set concrete, the set concrete shall be roughened, cleaned, washed and freshly coated with neat cement grout. Concrete shall be deposited at points and by methods which will minimize rehandling, prevent flowing, and obviate the necessity of working along forms. In sections confined by temporary vertical bulkheads, the concrete shall be deposited in a continuous operation until the section is completed. No drop shall exceed five (5') feet. It shall be deposited by methods which will release entrapped air and produce a dense, compact mass. Concrete shall not be deposited on ground which is in a muddy or frozen condition.

(B) DEPOSITING UNDER WATER

For concrete to be deposited under water, the cement content shall be increased by ten (10) percent over that indicated for the class and type of concrete specified.

Concrete shall not be deposited in water if it is practicable to deposit in air. No concrete shall be deposited in water having a temperature below thirty-five (35°) degrees Fahrenheit, unless permitted by the Engineer.

Concrete for deposit under water shall be conveyed by means of tremies or other approved methods.

When deposited by tremie method, the tremie shall be water-tight and sufficiently large to permit free flow of concrete. The discharge end shall be kept continuously submerged in the concrete and the shaft kept full of concrete.

(C) DEPOSITING IN FORMS

Unless specifically authorized to place concrete under water, there shall be no water in the forms at any time any concrete is deposited therein, and the work of depositing shall be kept well above the level of any rising water so that there will be no danger of entrance of water into the forms until the concrete is in place.

Concrete shall be deposited in continuous horizontal layers, each of which shall be placed before the one below has set and from which laitance and excess water shall be removed in such a manner that successive layers will be thoroughly bonded together to eliminate planes of separation between layers and prevent seepage of water.

Special care shall be taken to fill each part of the forms by depositing concrete directly as near final position as possible, to work the coarser aggregates back from the face and to force the concrete under and around the reinforcement bars without displacing them. After the concrete has taken its initial set, care shall be exercised to avoid jarring the forms or placing any strain on the ends of projecting reinforcement.

(D) DEPOSITING IN FORMS FOR FLOODWALL

Concrete for the floodwall monoliths shall be placed in one continuous pour, unless shown to be staged or otherwise noted on the Contract Drawings. Vertical and horizontal construction joints shall not be permitted in the floodwall monoliths, unless approved by the Engineer. Where construction joints cannot be avoided, a waterstop shall be installed in the joint and as approved by the Engineer.

(E) COMPACTING CONCRETE

Unless otherwise permitted by the Engineer, all concrete, during and immediately after depositing, shall be compacted thoroughly by means of internal vibrators, supplemented by spades, slicing rods, forks or treading. The concrete shall be worked thoroughly around the reinforcement and around embedded fixtures and in the corners of the forms. The operation of compacting the concrete shall be conducted so as to form a compact, dense, impervious, artificial stone which shall show a smooth face on exposed surfaces. Porous, plastered or defective concrete, shall be removed and replaced as directed by the Engineer, entirely at the Contractor’s expense.

Vibrators shall be of sturdy construction, adequately powered and capable of transmitting to the concrete not less than 3,000 nor more than 5,000 vibrations per minute when operating under load. The vibration shall be sufficiently intense to cause the concrete to flow or settle rapidly into place and visibly affect the

concrete over a radius of at least eighteen (18”) inches when used in a concrete having a one (1”) inch slump.

Either electric or mechanical internal vibrators approved by the Engineer may be used.

When vibrators are used, at least one vibrator for every ten (10) cubic yards of concrete placed per hour shall be in use at all times. In addition to these, at least one extra vibrator shall be at hand for emergency use.

The vibration shall be of sufficient duration to accomplish thorough compaction, but shall not be prolonged to a point where segregation occurs. Internal vibrators shall be applied close enough to the forms to vibrate the surface concrete effectively, but care shall be taken to avoid hitting the forms sufficiently to damage them. In the use of the vibrators care shall be taken not to cause vibration of concrete in which initial set has taken place.

4.06.09 CONCRETING DURING RAINFALL.

During periods of rainfall, concrete may be placed only if permitted by the Engineer, and under conditions where the required water-cement ratio can be maintained.

The placing of concrete during wet weather will not relieve the Contractor of any responsibilities under this contract.

4.06.10 CARE OF CONCRETE DURING COLD WEATHER.

During air temperatures below 38° F. in the shade, concrete in structures shall, where required, be maintained in an atmosphere of not less than 50° F., for at least five (5) days after placing or until the concrete has thoroughly hardened, and sufficient protective coverings, fuel and heating equipment shall be furnished, installed, operated and maintained to secure the required temperature conditions without injury to the concrete.

4.06.11 SURFACE CURING AND PROTECTION.

All surfaces of concrete shall be protected from injury and horizontal surfaces shall be cured in compliance with the requirements of Section 2.14, Curing Materials, Type 1-D, Clear.

From the moneys due to the Contractor, under this item, the sum of ten (10) dollars will be deducted for each square foot of horizontal surface which the Contractor does not cure, as herein required.

4.06.12 REMOVAL OF FORMS.

Forms shall not be removed until the concrete has hardened sufficiently, and the removal shall be carried out in such a manner as to insure the complete safety of the structure. In no event however shall forms be removed in less than three (3) days, unless approved by the Engineer. The Contractor shall be responsible for all damage or injury resulting from the removal of forms.

4.06.13 SURFACE FINISH.

(A) SAMPLE SLABS

The Contractor shall, where required, submit for approval sample concrete slabs of desired sizes, exhibiting the surface finishes required that the Contractor proposes to furnish. Exposed surfaces of structures shall be finished, as required, to present appearances equal to those of samples on file in the office of the Engineer.

(B) VOIDS

The work of finishing shall not be started until all voids are filled with mortar of the same ingredients and proportions as used in the concrete.

(C) FLOAT, RUBBED AND SCRUBBED FINISHES

Forms shall be removed as early as possible to expose concrete while it is green (set but not hardened).

Float finish surfaces shall be finished smooth and true by means of wooden or steel floats and have edges, including those of joints, rounded or chamfered.

Rubbed finished surfaces shall be thoroughly wetted, be finished smooth and true by means of carborundum or other abrasive blocks, and have lather working up on the surface removed by brushing and washing. Only water shall be used in finishing. Scrubbed finished surfaces shall have the coarse aggregate uniformly exposed by scrubbing with wire brushes and water. Muriatic acid shall, where required, be added to the water in proportion of one to five (1:5), and be entirely removed with clean water when the desired finish is obtained.

(D) POINTED AND BUSH-HAMMERED FINISHES

Thoroughly cured concrete surfaces shall be dressed with tools to a uniform texture of an even face. The tools ordinarily used are electric, air, or hand tools, giving various textured surfaces such as hand-tooled, rough or fine pointed, crandalled or bush-hammered as specified.

(E) FLOODWALL FINISH

Finish for exposed faces of the floodwall shall be as specified on the Contract Drawings.

(F) SURFACE FINISHES FOR PARKS FEATURES

Unless otherwise indicated on plans all concrete sidewalks shall have a light broom finish that is non-slip, directional finish perpendicular to path of travel.

Unless otherwise indicated on contract plans, curbs and walls with exposed faces and sides shall be rubbed smooth with carborundum bricks to the satisfaction of the Engineer. Mock up shall include example of this rubbed finish.

4.06.14 REPAIRS

(A) GENERAL

Surface defects and tie holes shall be repaired, as specified hereinafter, within 24 hours after removal of forms, unless otherwise approved by the Engineer. Ambient air temperature, and temperature of the concrete and repair mortar shall not be lower than 50 degrees F nor higher than 90 degrees F during repair and curing.

Defects determined by Engineer to exceed surface defects (e.g., defects that extend to a depth such that reinforcing steel is exposed) shall be repaired in accordance with procedures approved by Engineer. Contractor shall submit relevant defect repair procedures.

(B) REPAIR OF DEFECTIVE AREAS

All honeycombed and other defective concrete in surface defects shall be removed down to sound concrete. As required, edges shall be chipped perpendicular to the

surface, or slightly undercut; no feather-edges will be permitted. The area to be patched, and an area at least six inches wide surrounding it, shall be dampened to prevent absorption of water from the patching mortar. Bonding grout, consisting of one part cement to one part fine sand (passing a No. 30 sieve) mixed to a consistency of thick cream, shall be well brushed into the surface to be patched after surface water has evaporated from the area.

Patching mixture shall be made from the same materials as the concrete; mix shall be not more than one part cement to two and one-half parts sand by damp loose volume. White portland cement shall be substituted for a part of the gray portland cement on exposed surfaces to match the surrounding concrete; color match shall be determined by a trial patch. Mixing water, for patching mixture shall be no more than necessary for handling and placing. Patching mixture shall be at the stiffest consistency that will permit placing.

Patching mixture shall be applied when the bond coat begins to lose its water sheen. Mixture shall be thoroughly consolidated into place and struck off so as to leave the patch slightly higher than the surrounding surface. Patch shall be left undisturbed for at least one hour, to permit initial shrinkage, before final finishing. Patched area shall be kept damp for seven days. Metal tools shall not be used to finish a patch in a formed surface that will be exposed.

Other materials for adhesion or patching, including latex-modified portland cement mortar and epoxy mortars and compounds, shall be subject to prior approval by Engineer and shall be used in accordance with manufacturer's recommendations.

(C) TIE HOLES

Unless stainless steel, noncorrosive, or Engineer-approved coated ties are used, tie holes in surfaces not to be exposed in the finished Work shall be cleaned, thoroughly dampened, and filled solid with patching mortar, Procedures and materials for plugging tie holes in surfaces to be exposed in the finished Work shall be as approved by Engineer.

(D) REMOVAL OF STAINS AND SURFACE DEPOSITS

Stains, rust, efflorescence, and surface deposits considered objectionable by the Engineer, shall be removed as approved by the Engineer.

4.06.15 MEASUREMENT.

In determining the volume of concrete to be paid for, deductions will be made for the spaces occupied by pile heads, timbers and drains. Deductions will not be made for the spaces occupied by steel reinforcement, structural steel or water-proofing. Other deductions will or will not be made, as specified.

The measured volume of concrete will be adjusted for payment in accordance with the strength requirements under the NYCDOT Standard Highway Specifications Section 5.04.

4.06.16 PRICE TO COVER.

The contract price per cubic yard for Concrete for Structures, Class A-40, Lightweight Concrete in Structures, Class A-40, Concrete for Structures, Class A, Concrete for Floodwall and Gates, Concrete for Marine/Esplanade Structures, and Concrete for Utility Crossings and Gate Seepage Wall Closure Pours, measured in place, except such concrete as otherwise paid for, shall cover the cost of all labor, materials, equipment, insurance, and incidentals required to furnish and construct the concrete structure complete in full compliance with the requirements of the

specifications, exclusive of steel reinforcement, and to furnish such samples for testing and to provide such testing equipment, laboratory space and facilities as may be required. All joints, waterstops, and sealants shall be included in the contract price.

The contract price per cubic yard for concrete placed underwater shall include the cost of the additional ten (10) percent of cement used for such concrete.

The contract price per cubic yard for Concrete for Park Features, measured in place, shall cover the cost of all labor, materials, equipment, insurance, and incidentals required to furnish and construct the concrete for park features, stairs, stage, walls, curbs and seatwalls complete in full compliance with the requirements of the specifications, exclusive of steel reinforcement, and to furnish such samples for testing and to provide such testing equipment, laboratory space and facilities as may be required. All joints, mock ups, waterstops, and sealants shall be included in the contract price.

Payment will be made under:

Item No.	Item	Pay Unit
4.06 A	CONCRETE FOR STRUCTURES, CLASS A-40	C.Y.
4.06 LA	LIGHTWEIGHT CONCRETE IN STRUCTURES, CLASS A-40	C.Y.
ESCR-4.06 A	CONCRETE FOR STRUCTURES, CLASS A	C.Y.
ESCR-4.06 HP FL	CONCRETE FOR FLOODWALL AND GATES	C.Y.
ESCR-4.06 PF	CONCRETE FOR PARK FEATURES	C.Y.
ESCR-4.06 HP ES	CONCRETE FOR MARINE/ESPLANADE STRUCTURES	C.Y.
ESCR-4.06 UC	CONCRETE FOR UTILITY CROSSINGS AND GATE SEEPAGE WALL CLOSURE POURS	C.Y.

END OF SECTION

SECTION ESCR-4.11 – EXCAVATION AND FILLING

4.11.1 INTENT.

This section describes Excavation and Filling necessary for the construction of the floodgates, floodwall, esplanade, cut-off wall and anchoring system, Williamsburg Bridge security system, and the raising of East River Park.

4.11.2 DESCRIPTION.

(A) The location, general character and essential details shall be as specified and as shown on the Contract Drawings.

(B) Earth excavation shall include the removal and disposal of material of whatever nature encountered in the performance of the work, unless otherwise specified. Materials of whatever nature encountered shall be defined as including, but not be limited to, soil, stones, soft weathered rock that can be removed by mechanical means other than air hammer or drilling and blasting, and miscellaneous fill (excluding contaminated materials, debris and building demolition material consisting primarily of large wooden objects, plastic, asphalt shingles, metals, etc.) which is not classified as rock excavation or contaminated or hazardous wastes that materially affect the cost of removal and disposal to the Contractor.

Earth excavation shall not include the cost of excavation and disposal of boulders or parts thereof more than one-half (1/2) cubic yard in volume (to be measured by multiplying the maximum cross section area by seven tenths (7/10) of the length of that which is to be removed) in open cuts, rock as defined in Subsection 4.11.2.(C), materials which must be removed and disposed of as contaminated material or hazardous waste, manmade objects or structures not shown on the Contract Drawings or indicated in the specifications, that could not reasonably have been anticipated by the Contractor, were not anticipated by the City, and which materially affect the cost of excavation and disposal to the Contractor. Excavation and disposal of said materials will be paid for under other contract items where anticipated by the City or will be paid for as “Extra Work”, under Article 26 of the Standard Construction Contract, where the City deems the Contractor could not have reasonably anticipated the existence of such materials that significantly affects the Contractor’s costs of removal and disposal.

The dismantling and removal of the existing street lights, traffic signals and fire alarms will be done by the various departments having jurisdiction, except as otherwise provided. The existing foundations for these facilities shall be removed by the Contractor to a plane two (2’) feet below subgrade and such removal will be measured for payment under Earth Excavation.

(C) Rock Excavation shall include only the removal and disposal of unbroken ledge rock in its original formation which cannot be removed by ditching machines, ripper, rock plow, backhoe, or other mechanical means and which can only be removed by air hammers or by blasting, drilling or plug and feather in order to insure the prompt and proper performance of the work. It is not intended to cover softer rock formations encountered which can be removed by mechanical means other than air hammer or drilling and blasting.

(D) Grade shall mean the plane or planes through the tops of both curb lines.

(E) Rock subgrade for roadway area shall mean a plane two (2') feet below and parallel to grade and two (2') feet wider on each side than the roadway. Rock subgrade for sidewalk area shall mean a plane one (1') foot below and parallel to grade. Rock subgrade for structures shall be to the depths required for the cradle and foundation of the structure.

(F) Filling shall include the furnishing, re-use, placement and compaction of approved material required. Filling shall be by Place Measurement or Vehicle Measurement, as specified.

(G) Excavation in earth for the footings of structures shall be carefully conducted so as to approach the neat lines as closely as possible without disturbing the underlying soil and hand excavation shall be used within the last twelve (12") inches. Under no circumstances shall any backfilling material be placed upon surfaces to be used as foundation for footings. Where, in the opinion of the Engineer, the slope of existing rock surfaces requires it, rock shall be suitably benched to give full and proper bearing to concrete in accordance with the directions of the Engineer. Rock surfaces shall be cleaned and if necessary washed before concrete is poured.

(H) All excavation and backfilling required for the installation of Sewers and Water Mains shall be done under the appropriately scheduled items in accordance with the requirements of the NYC Department of Design and Construction, Division of Infrastructure, Standard Sewer Specifications and Standard Water Specifications.

4.11.3 SUBMITTALS

(A) PRODUCT DATA

Materials list of items proposed to be provided under this Section, including but not limited to, the following:

General Fill; including details of all sources of imported soil, fill or other material

Select Granular Fill; and

Lightweight Fill, including manufacturer test data and certification that the lightweight fill meets the specified properties.

(B) CERTIFICATES

Submit certificate stating that all materials and procedures meet or exceed the specified requirements of this Section.

(C) REPORTS

Tests of gradations, liquid limit, and plasticity index of fill and backfill materials.

Tests of maximum dry density or maximum index density.

Settlement monitoring results.

4.11.4 MATERIALS FOR FILL AND BACKFILL.

(A) GENERAL

All material for fill or backfill shall have a moisture content close to the optimum moisture content as determined by the Modified Proctor Test conducted in accordance with ASTM D1557.

All material for fill or backfill shall be natural or man-made materials, free of deleterious materials, and free from frost at the time of placement.

Miscellaneous fill material removed from trenches and excavations shall not be considered as acceptable backfill material unless found to be in compliance with these specifications and approved in writing by the Engineer. The project site subsurface conditions may consist partially of variable thickness layers of unsuitable material. This material may not be considered to be acceptable backfill material as described herein, or as determined by the Engineer.

Unless otherwise approved by the Engineer, the Contractor shall import only fill material that meets one of the following environmental criteria. If there is a conflict between the Remedial Action Plan (RAP) and this Section, the more stringent criteria shall apply.

(a) Virgin quarried material.

(b) NYSDOT-spec Recycled concrete aggregate (RCA), contains less than 10% fines and no asphalt, from facilities permitted or registered by NYSDEC.

(c) Material from a facility that possesses a current Beneficial Use Determination (BUD) from the NYSDEC that includes testing at a minimum frequency of one sample per 1,000 cubic yards and such results are below the lower of the Restricted Residential and Groundwater Protection SCOs set forth in NYSDEC 6 NYCRR Part 375. Any testing shall be conducted in accordance with Part 3.2.F.

(d) Material from any other site where testing results performed by the Engineer demonstrate that the material meets the lower of the Restricted Residential and Groundwater Protection SCOs set forth in NYSDEC 6 NYCRR Part 375 in accordance with the following procedures:

    1) Contractor shall establish at the facility a designated stockpile of soil intended for import to the site. Designated stockpile shall remain undisturbed until tested by the Contractor and loaded and transported to the site.

    2) The samples will be analyzed for Target Compound List (TCL) volatile organic compounds (VOCs), semi-volatile organic compounds (SVOCs), pesticides, PCBs, and Target Analyte List (TAL) metals, at a frequency of one composite sample per 1,000 cubic yards. NYCDEP must approve of a lower frequency for certain sources.

    3) Laboratory analysis and approval of samples may require five (5) to ten (10) business days.

    4) Material may not be imported for use as without prior approval by the Engineer.

(e) Material from the New York City Office of Environmental Remediation Clean Soil Bank.

(B) FILL AND BACKFILL

Filling and Backfilling materials shall have a composition of inorganic soil, blasted or broken rock, and similar materials of natural or man-made origin, including mixtures thereof, shall be considered suitable materials provided it is free of shale or other soft, poor durability particles.

Glass from recycling facilities that meets the requirements of Subsection 4.11.4.(E) for Glass shall be considered suitable material for mixing with fill provided the Contractor maintains the gradations specified herein and as approved by the Engineer. However, glass shall not be placed in contact with synthetic liners, geogrids, geotextiles or other geosynthetics.

Glass incorporated into fill shall be thoroughly mixed with other suitable material so that glass constitutes no more than 30 percent by volume anywhere in the fill as visually determined by the Engineer.

The Fill and Backfill material shall meet the following gradation:

U.S. Sieve Size	Percent Passing
4 inch	100
2 inch	75 to 100
No. 4	22 to 66
No. 40	5 to 15
No. 200	0-2

Fill and Backfill, as specified above may be used up to 3 ft from finished grade or the bottom of the horticultural fill layer, where specified on the Contract Drawings. The upper 3 ft of fill material (below the finished grade or horticultural fill layer) shall meet the requirements of the Select Granular Fill, as defined below.

The Contractor may use, as fill, that portion of the excavated material conforming to these specifications. However, all materials used for fill shall be free from organic material and other unsuitable material. The only exception would be the allowable contamination of recycled glass.

Excavated materials not complying with the above specifications shall be considered unsuitable for fill and shall be removed from the job site to an approved disposal site.

(C) SELECT GRANULAR FILL

Select Granular Fill shall be a natural, well graded sand and crushed stone or approved clean earth of low silt and clay content, free from bricks, blocks, excavated pavement materials and debris, stumps, roots and other organic matter, as well as ashes, oil and other perishable or foreign material. All materials furnished under this item shall meet the following gradation:

U.S. Sieve Size	% Passing
2 inch	100
1 inch	85 to 100
1/2 inch	70 to 100
No. 4	50 to 80
No. 10	25 to 55
No. 20	11 to 30
No. 40	6 to 17
No. 60	4 to 12
No. 100	3 to 8
No. 200	0-2

Select granular fill for trench backfill material shall be well graded soil meeting the above gradation requirements, but not contain particles greater than ¼ inch in maximum dimension. The finest content (material passing the No. 200 sieve) shall not be greater than 2%.

(D) PROCESSED FILL

If approved in writing by the Engineer, excavated material determined to be unsuitable for fill may be processed (i.e. screened and/or crushed) to produce select granular fill material or fill material. Such processed materials for backfill must be in compliance with the material specifications herein for either Select Granular Fill or for Fill, as required. No separate or additional payment will be made for the cost of all labor, materials, plant, equipment, samples, tests and insurance necessary or required to perform this processing work. Payment for the costs of all labor, material, equipment and insurance necessary and required to furnish and deliver, and to place, compact, sample and test these processed acceptable backfill materials shall be in accordance with Subsection 4.11.7(C). (Excavated material that is hand groomed and/or groomed with the use of excavating equipment of bricks, blocks, pavement materials, debris, stumps, roots, stones, boulders, timber, wood, etc., so as to render the excavated material acceptable for backfill, whether ordered by the Engineer or at the Contractor's own discretion, shall not be considered as processed material but shall be considered as approved excavated suitable material. No separate or additional payment will be made for the use of this groomed excavated material as backfill, the cost of all labor and material shall be deemed included in the prices bid for all contract items of work.)

(E) GLASS

Glass shall be crushed to a maximum particle size of 3/8 inch.

Glass may contain up to a maximum of five (5%) percent by volume of china, ceramics, plate glass products, paper, plastics or other deleterious materials. The material shall be subject to visual inspection by the Engineer or their representative, and may be rejected based on this inspection. In case of rejection, the inspection will be documented in writing by the Engineer who shall indicate the basis of rejection.

(F) LIGHTWEIGHT FILL

Lightweight fill shall be expanded shale, clay or slate produced by the rotary kiln process and meeting the requirements of ASTM C330. The lightweight fill shall have a proven record of durability, and be non-corrosive, with the following properties:

Soundness Loss: The maximum soundness loss shall be 30% when tested, with 4 cycles of Magnesium sulfate, in accordance with AASHTO T104.

Abrasion Resistance: The maximum abrasion loss shall be 40% when tested in accordance with ASTM C131.

Chloride Content: The maximum chloride content shall be 100 ppm.

pH between 6.5 and 9.0

Gradation:

U.S. Sieve Size	Percent Passing
1 inch	100
3/4 inch	90 to 100
3/8 inch	10 to 50
No. 4	0 to 15

The in-place compacted moist density shall be 75 lbs/ft^3. The lightweight aggregate producer shall submit verification of a compacted density of minimum 65 pcf (960 kg/m^3) when measured by the Modified Proctor test conducted in accordance with ASTM D1557, “Modified Test Methods for Laboratory Compaction Characteristics of Soil Using Modified Effort (56,000 ft-lbf/ft^3 (2,700 kN-m/m^3)).

The minimum angle of internal friction Φ shall be 40 degrees. The lightweight aggregate producer shall submit verification that the angle of internal friction shall be greater than 40° when measured in a triaxial compression test on a laboratory sample with a minimum diameter of 10 inches.

(G) REUSE OF EXCAVATED SOIL

Material may not be reused on-site without prior approval by the Engineer. If the Contractor anticipates reuse of site material, the Contractor shall notify the Engineer of the area with a minimum two (2) weeks notice prior to reuse to allow for sampling, if necessary, and approval by the Engineer, in consultation with NYCDEP and/or NYSDEC.

(H) DRAINAGE CRUSHED STONE

Crushed stone used for weep holes drainage for the L-Walls shall be No. 57 stone as per ASTM D448.

4.11.5 EARTH EXCAVATION METHODS.

(A) Excavation for streets shall:

(1) be made and maintained to roadway crowns, sidewalk area slopes and side slopes specified until the entire work is accepted;

(2) be made below grade to exposed rock, when soundings indicate the existence of rock between grade and rock subgrade;

(3) include the removal, as directed, of unsatisfactory material below grade;

(4) include the cutting of the side slopes in earth excavation to a slope of one and one-half (1-1/2) horizontal to one (1) vertical or such other approved slope as may be rendered necessary by local conditions, and no measurement beyond such approved limits of slope will be made or allowed for payment.

(B) Excavation for walls and other structures shall be made to the dimensions specified and shall be done as follows.

(1) GENERAL.

Trenches and pits shall be excavated to the depths required for cradle and foundation of structures. All trenches in earth shall be excavated with vertical sides, and shall be supported by close sheeting, properly braced. Sheeting and bracing shall extend from at least the existing surface of the ground to an adequate depth below the subgrade of the structure, except where otherwise specified on the Contract Drawings, or permitted by the Engineer in writing. Sheeting must be driven below the area of the pilot cut. Driving of sheeting above the pilot cut is subject to the directions of the Engineer.

Pilot cuts for trenches shall not exceed five (5') feet at any time. The Engineer may reduce the depth of the pilot cut should soil and subsurface conditions warrant such action.

The Engineer may direct the Contractor to use other types of equipment, and to revise the procedure during the excavation of the pilot trench and the driving of the sheeting should it be found necessary to do so.

In accordance with 29 CFR 1926.650, a trench is a narrow excavation (in relation to its length) made below the surface of the ground. In general, the depth is greater than the width, but the width of a trench (measured at the bottom) is not greater than fifteen (15') feet. If forms or other structures are installed or constructed in an excavation so as to reduce the dimension measured from the forms or structure to the side of the excavation to fifteen (15') feet or less, the excavation is also considered to be a trench. The Contractor shall provide protection from collapse and cave-in for any employee who enters a trench or other excavation in accordance with the requirements of 29 CFR 1926 Subpart P, unless the excavation is less than five (5') feet in depth and examination of the ground by the Contractor's "competent person" provides no indication of a potential cave-in. The Contractor shall include the proposed procedures to meet the excavation safety requirements in the Contractor's Project Safety and Health Plan. Trenching and excavation work shall be carried out under the supervision of the Contractor's "competent person." The Contractor shall provide ladders or ramps for access and egress within twenty-five (25') feet of an employee work area if a trench is four (4') feet or more deep. The Contractor shall keep traffic, equipment and materials at least two (2') feet away from the edge of any trench or excavation, or use retaining devices. When mobile equipment is operated near an excavation or must approach the edge of an excavation, either the operator must have a clear and direct view of the edge of the excavation; or a warning system of barricades, hand signals or mechanical signals shall be used. Workers shall not be permitted under loads that are being handled by lifting or digging equipment.

Trenches under five (5') feet in depth need not be sheeted and braced, except where one of the following conditions exist: the trenches are in close proximity to

existing structures or subsurface structures; where the Engineer, in writing, specifically prohibits the use of a non-sheeted trench; or where examination of the ground by a “competent person” provides indication of a potential cave-in, and trenches need to be sheeted and braced.

For the purposes of open excavations and trenches, the term “competent person” shall be defined as a person designated by the Contractor, in writing, who has had specific training in, and is knowledgeable about, soil analysis, the use of protective systems and the requirements of 29 CFR 1926 Subpart P, who is capable of identifying existing and predictable hazards in the surroundings, or working conditions which are unsanitary, hazardous, or dangerous to employees, and who has authorization to take prompt corrective measures to eliminate them.

Where shown, specified or permitted in writing by the Engineer, the sides of the trenches shall be sloped to elevations approved by the Engineer. Side slopes must be stable and shall be, in the dry, at least one and one half (1-1/2) vertical on one (1) horizontal.

The subgrade of trenches shall be constructed neat and to the grades as shown in the Contract Documents, and as directed by the Engineer.

Upon completion of the trenches and excavations and prior to placement of structures, the Contractor shall take in-place soil density tests of the subgrade (the number and locations of these tests shall be as directed by the Engineer), and shall compact the subgrade, as directed by the Engineer, to a minimum of ninety (90) percent of Modified Proctor Maximum Dry Density.

(2) ADDITIONAL REQUIREMENTS FOR TRENCHES

(a) Where structures are to be supported on piles and the Contractor deems it necessary to widen the trench beyond the maximum widths herein specified in order to permit the driving of such piles, the Contractor shall apply to the Engineer in writing for permission to widen the trench.

(b) Any widening or enlargement of excavation permitted in writing by the Engineer upon the request of the Contractor in order to perform the work as specified in the Contract Documents and/or to expedite the Contractor’s construction operations, will not be measured for any separate or additional payment, but the costs thereof shall be deemed included in the prices bid for all contract items of work.

(c) In rock trenches the Contractor may, with the written permission of the Engineer, omit the use of side forms. No rock shall project inside the minimum width vertical rock cut lines herein specified.

(d) Where the Contractor elects to cut the trench in rock by means that will result in overbreakage, rather than resorting to means which will insure adherence to the maximum allowable width of trench, the Contractor shall be required to fill the spaces between the edges of the external neat line of the poured-in-place structure and the sides of the rock cut with concrete, from subgrade of trench to a minimum height of two (2’) feet above the top of the footing.

(e) If the Contractor elects to carry the excavation in earth below the required subgrade of the trench, the Contractor shall backfill the trench to the required subgrade with either properly compacted Stone Ballast or with

concrete, as directed by the Engineer. If the Contractor elects to carry the excavation in rock below the required subgrade of the trench, the Contractor shall backfill the trench to the required subgrade with concrete or stone ballast as directed by the Engineer. No separate or additional payment shall be made for such backfilling where required, nor for any additional excavation and sheeting, the cost thereof shall be deemed included in the prices bid for all contract items of work.

(f) The construction of adjacent sewers and/or water mains in the same trench shall be in accordance with the requirements of the NYCDEP Standard Sewer and Water Specifications.

(3) LENGTH OF TRENCH EXCAVATION.

The maximum length of trench excavation in roadway any time shall be as stipulated for the maintenance and protection of traffic.

Unless otherwise specified in the Contract Documents or ordered in writing by the Engineer, all trenches in rock shall be excavated to its full depth for a minimum distance of twenty (20') feet in advance of the length of structure permitted to be laid; however, the total length of trench shall not be less than fifty (50') feet. The only exception to this is at its upper end or ends, where rock shall be excavated to its full depth to a distance of not less than five (5') feet beyond the sewer to be built.

(4) EXPOSED STRUCTURES TO BE PROTECTED.

All exposed structures shall be carefully protected from the effects of blasts. Any damage done to such structures shall be promptly repaired by the Contractor at the Contractor's own expense.

(5) DISPOSAL OF WATER FROM EXCAVATIONS.

The Contractor shall at all times during the progress of the work keep the trenches and excavations free from water. The water from the trenches and excavations shall be disposed of in such a manner as will not cause injury to the public health, nor to public or private property, nor to the work completed or in progress, nor to the surface of the streets, nor cause any interference with the use of the same by the public. All sewers used for disposal of water from the trenches and excavation during construction shall be acceptably cleaned.

When in order to comply with the above, it is deemed necessary to widen the trench beyond the allowable maximum width, to permit the installation of well-points, the Contractor shall, as directed by the Engineer, provide either pipe of additional strength or concrete encasement at no additional cost to the City.

The Contractor shall, with their own equipment, provide dewatering where required at no additional cost to the City. The cost for all labor, equipment, materials, etc. required to dispose of water from the trenches shall be deemed included in the prices bid for all items of the Contract.

All dewatering and discharge pipes and hoses which cross traveled roadways shall be placed in such a manner so as to eliminate any disruption of traffic flow. If so ordered by the Engineer, the Contractor shall place the pipes and hoses in shallow trenches which will then be plated over. All header pipe shall be buried below existing roadway grade at driveways in order to maintain access to driveways.

Contaminated water shall be placed in containers and treated prior to disposal.

All plates shall be firmly secured so as to eliminate any possible shift or movement.

All pumps used in the dewatering operation shall be electric and shall be powered directly from the electric grid (Con Edison drop), unless otherwise unavailable.

Where the subgrade of the trench cannot be maintained in a dry condition, except in locations where the structures are on piles, the Contractor shall excavate the trench to an additional depth of six (6”) inches below the subgrade of the sewer and backfill the trench to the subgrade of the sewer with stone ballast.

The cost for this additional excavation, sheeting, installation of stone ballast, labor, materials, plant, equipment and insurance required or necessary to complete this work shall be deemed included in the prices bid for the respective sewer or manhole items.

(C) Approved sheeting and bracing shall be used where necessary to support sides of excavation, in order to: prevent damage to subsurface structures and adjacent buildings; safeguard persons and property; minimize inconvenience to traffic and the public; protect the structure to be installed; and, provide suitable and safe working conditions. Except as otherwise provided, deviations from the above will be permitted only where, in the judgment of the Engineer, such exception will not result in any of the hazards described above.

In cases where sheeting and bracing will not adequately protect adjacent structures from damage and settlement, the Contractor will be required to use such methods as are necessary to safely support and maintain adjacent and abutting property and structures and to maintain the work safe to life, limb and property.

All sheeting and bracing systems that the Contractor elects to use or that are ordered to use by the Engineer or the Department shall comply with the requirements of Section 40.05, “SHEETING AND BRACING,” of the NYC Department of Environmental Protection, Bureau of Water and Sewer Operations, Standard Sewer and Water Main Specifications, and must receive the approvals stated therein.

Unless otherwise specified in the Contract Drawings or these Specifications or specifically permitted in writing by the Engineer, the Contractor shall be required to withdraw and remove all sheeting and bracing simultaneously with the backfilling of trenches and excavations.

(D) When directed, soundings shall be made at intervals of about ten (10’) feet to determine the existence of rock between grade and rock subgrade.

(E) When boulders, masonry, concrete, loose fragments of rock, tree stumps or other material are removed by blasting, all blasting operations shall be conducted in strict accordance with the City ordinances and regulations relative to rock blasting and the storage and use of explosives.

(F) No blasting shall be done within five (5’) feet of water mains, sewers or other structures.

(G) Excavation for the purpose of removing boulders, loose fragments of rock, tree stumps, roots and unsatisfactory material shall be backfilled with material complying with the specifications for Filling.

(H) Unless otherwise permitted, all earth excavation which is suitable and needed for fill shall be used within the contract limits.

4.11.6 ROCK EXCAVATION METHODS.

When rock surfaces in streets, trenches or other excavations are uncovered, the Engineer shall be notified in order that the Contractor may make necessary measurements. Rock excavated before such measurements are made will not be paid for.

(A) Rock Excavation for Streets shall:

(1) be made to rock subgrade, when specified;

(2) be made and maintained to side planes specified until the entire work is accepted;

(3) be made in sections not less than fifty (50') feet in length, unless otherwise permitted.

(B) Rock Excavation for walls and other structures shall be made to the dimensions specified.

In rock trenches the Contractor may, with the written permission of the Engineer, omit the use of side forms. No rock shall project inside the minimum width vertical rock cut lines herein specified.

If the Contractor elects to carry the excavation in rock below the required subgrade of the trench, the Contractor shall backfill the trench to the required subgrade with either concrete or properly compacted stone ballast, as directed by the Engineer. No separate or additional payment shall be made for such backfilling where required, nor for any additional excavation and sheeting, the cost thereof shall be deemed included in the prices bid for all contract items of work.

In addition, the filling of voids left by the removal of ledge rock from within the limits of rock excavation payment limits shall be done in accordance with the requirements of this Subsection 4.11.7.

Any widening or enlargement of excavation permitted in writing by the Engineer upon the request of the Contractor in order to perform the work as specified in the Contract Documents and/or to expedite the Contractor's construction operations, will not be measured for any separate or additional payment, but the costs thereof shall be deemed included in the prices bid for all contract items of work.

(C) No blasting will be permitted unless otherwise specified. The Contractor shall use line drilling or other acceptable methods to excavate rock. But if blasting is permitted, blasting operations shall be conducted in strict accordance with The City ordinances and regulations relative to rock blasting, the storage and use of explosives and prevention of silicosis. Any rock excavation within five (5') feet of a water main less than thirty-six (36") inches in diameter, and within ten (10') feet of a water main thirty-six (36") inches or more in diameter, shall be done with very light charges of explosives, or if directed, without blasting, and the utmost care shall be used to avoid breaking or disturbing the main. No blasting shall be done within five (5') feet of water mains, sewers or other structures except by written permission of the Engineer.

4.11.7 BACKFILLING METHODS.

(A) BACKFILLING AROUND STRUCTURES

Unless otherwise specified or directed, all trenches and excavations shall be backfilled immediately after the structures are built and inspected, and permission to backfill has been granted by the Engineer.

All backfill shall be carefully deposited and spread by approved methods.

Backfill shall proceed simultaneously with the withdrawal of sheeting. Withdrawal of sheeting below levels previously backfilled and compacted is prohibited.

The use of backhoe buckets for the compaction of backfill material in all trenches and excavations will not be permitted.

(1) Select Granular Fill

The Contractor shall use Select Granular Fill for backfilling trenches and excavations within any area less than two (2') feet wide in its least dimension (i.e. space between face of trench and outside face of cavities behind sheeting, filling of voids left by removal of boulders beyond the limits of sheeted trench, etc.) and within eighteen (18") inches around all underground facilities (i.e. conduit, cable, etc.).

Select granular fill shall be deposited and spread by approved methods in uniform horizontal layers not exceeding ten (10") inches in depth and each layer shall be thoroughly compacted to the satisfaction of the Engineer, before a successive layer is deposited. A minimum of 95 percent of Modified Proctor Maximum Density will be required after compaction.

The cost of providing Select Granular Fill as specified hereinabove, together with all labor, materials, plant, equipment, samples, and tests necessary and required for delivering, placing, compacting and testing of Select Granular Fill, shall be deemed included in the prices bid for all respective items of work. No separate or additional payment shall be made for this work unless otherwise specified.

(2) All excavated material from within the project limits which is considered as suitable material under the requirements of Subsection 4.11.4.(B), shall be utilized for backfill unless determined to be unsuitable as contaminated material by the Engineer.

The cost for all labor, materials, plant, equipment, samples, and tests necessary and required for the hauling, storing, placing, compacting and testing of suitable excavated fill material all in accordance with the Specifications and as directed by the Engineer, shall be deemed included in the prices bid for all respective items of work. No separate or additional payment shall be made for this work unless otherwise specified.

(B) BACKFILLING AROUND SHEETING

When sheeting is withdrawn all cavities remaining in or adjoining the trench shall be filled and compacted. When sheeting is left in place all cavities behind such sheeting shall be filled as directed. All materials used for such backfill and the compaction of such materials shall be as specified herein.

(C) DEFICIENCY IN FILL MATERIAL

Unless otherwise shown on the plan, trenches shall be backfilled to the height of the surface of the ground as it existed at the commencement of the work. Should there be a deficiency of suitable material for that purpose, the Contractor shall furnish and place such additional material as may be required.

Payment for the cost of all labor, material, and equipment necessary and required to furnish and deliver these acceptable backfill materials, where a deficiency of acceptable backfill material occurs, shall be made as follows:

(1) For providing acceptable select granular fill (whether natural or processed) to satisfy the requirements of Section 4.11.7(A)(1), payment shall be deemed included in the prices bid for all contract items of work. No separate payment will be made for this work.
(2) For providing acceptable clean fill (whether natural or processed) to satisfy the requirements of Section 4.11.7(A)(3) to fill voids left by the removal of ledge rock, payment shall be made under the Contract Item - ROCK EXCAVATION.
(3) For providing acceptable clean fill (whether natural or processed) ordered by the Engineer, payment shall be made under the Contract Item - FILL.

(D) REMOVAL OF SURPLUS MATERIAL

As the trenches are backfilled, the Contractor shall remove all surplus material, and regrade and leave free, clear and in good order all roadways and sidewalks adjacent to the completed work and within fifty (50') feet of the end of the completed work. All surplus material or any part thereof shall be deposited, if required by the Engineer and at the Engineer's direction, on the streets and avenues within the limits of this Contract where they are below grade or contain depressions. Such fill shall be compacted to the required density (95% Modified Proctor Maximum Density) and in such a manner so as to leave the surfaces of the backfill even with the adjoining surfaces. The surplus material not reused on site shall be disposed of in accordance with Section 8.01.

(E) TEMPORARY BULKHEADS

For retaining the backfilling only temporary bulkheads will be allowed over sewers, basin connections and drains. Such bulkheads shall not be of stone, and they shall be removed as the trenches are backfilled.

(F) SUBGRADE STRUCTURES NOT TO BE COVERED

Subgrade structures shall not be covered until the Engineer shall have inspected, measured and located the same and given permission to backfill the trenches over them.

(G) FILL

Fill shall be deposited, satisfactorily compacted, and maintained until the entire work is accepted, between:

(1) the subgrade of proposed pavement and the surface of proposed curbs and sidewalks and the existing ground surface;
(2) the planes of the slopes of the embankment or the backs of retaining walls, as specified;

(3) rock subgrade and the finished surfaces of roadways and sidewalks.

Embankment slope shall be one and one-half (1-1/2) horizontal to one (1) vertical.

(H) The Contractor shall fill or backfill with material having a moisture content suitable for the proper compaction of that material. The Contractor shall be responsible for determining the proper limits as the work is progressed. Water added shall be thoroughly incorporated into the soil, and manipulation shall be provided whenever necessary to attain uniform moisture distribution to the soil. When the moisture content of a lift, that is about to be compacted, exceeds the required amount, compaction shall be deferred until the required moisture content is achieved or a more suitable material shall be used. Fill material shall be carefully deposited and spread by approved methods in uniform horizontal layers not exceeding ten (10") inches in depth, extending across the entire width of fill prior to compaction, and each layer being thoroughly compacted to the satisfaction of the Engineer before a successive layer is deposited. A minimum of 95 percent of Modified Proctor Maximum Density will be required after compaction.

No separate or additional payment be made for any costs associated with the achievement of optimum moisture content, including any additional excavation due to the removal of any layer not meeting the specified requirements and for the replacement of any layers with suitable material. Costs shall be deemed included in the prices bid for all items of work.

When placing fill or backfill around underground facilities in shallow excavations, ten (10") inch layers shall be deposited to progressively bury the facility to equal depths on both sides and for the full depth and width of the trench excavated for the facility.

(I) In deep trenches, in lieu of depositing and compacting the backfill from two (2') feet above the underground facility to a plane five (5') feet below final surface in accordance with the above specified procedure, the Contractor may submit to the Engineer, for approval, an alternate backfill method (i.e. puddling, jetting, deeper compaction layers, etc.). This submittal must fully describe the alternate method, including proposed equipment, backfill material, depth of compaction layer, and trench locations where it will be employed. However, approval of any alternate backfill method shall not relieve the Contractor from obtaining a minimum 95% Modified Proctor maximum density. Should the Engineer determine that the specified density is not being obtained, the area must be re-excavated and backfilled at the Contractor's own cost until the required compaction density is achieved.

(J) Backfill immediately adjacent to conduits shall not contain particles larger than one- quarter (1/4") inch in diameter. Compaction shall be attained by the use of impact rammers, plate or small drum vibrators, or pneumatic button head compaction equipment and shall be capable of exerting a pressure equivalent to two hundred and fifty (250) to three hundred (300) pounds per inch width of compression roll, or an equivalent pressure if other than smooth wheel or pneumatic tired rollers are permitted.

Hand tamping will not be permitted except in the immediate area of the underground facility.

The backfill, within two (2') feet of such facilities, shall be wetted (except where clay is present) in ten (10") inch lifts and lightly hand tamped with as many strokes

as required to achieve maximum density.

(K) Where sheeting has been used for the excavation, it shall be pulled when the excavation has been filled or backfilled to the maximum unsupported depth allowed by New York State Department of Labor Industrial Code Rule 23 and Title 29 Code of Federal Regulations Part 1926, Safety and Health Regulations for Construction. Where a difference exists between regulations, the more stringent requirements shall apply.

(L) In-place soil density tests will be required to ensure that the soil compaction requirements of the specifications are met. In-place soil density tests shall be taken for each and every layer of backfill placed, at a maximum of one hundred (100') feet intervals along the length of each layer. However, the location of the tests shall vary horizontally along each successive layer, such that no two (2) tests are conducted at the same station location as any previous layers. The number and locations of in-place soil density tests shall be as directed by the Engineer.

For each one thousand (1,000) cubic yards of each type of backfill soil utilized, for which in-place soil density tests are to be performed, shall undergo a minimum of one (1) Modified Proctor analysis in order to determine the maximum dry density and optimum moisture content of the soil material to be tested. Due to varying soil conditions, additional Proctor analyses may be required by the Engineer. The number and locations of all samples to undergo Proctor analysis shall be as directed by the Engineer.

The Contractor shall retain the services of a testing laboratory, in accordance with Section 7.12 - Soil Density Testing, to make all compaction tests of backfill materials used and placed. All compaction tests shall be witnessed and verified by the Engineer. Proctor analyses and in-place soil density tests shall be performed in accordance with Section 7.12.

Unless otherwise provided for in the Contract no separate or additional payment shall be made for the depositing, compacting and sampling of backfill nor for the services of the approved testing laboratory, the costs thereof, shall be deemed included in the prices bid for all items of work.

The Contractor shall furnish the Engineer with copies of in-process compaction reports certified by a Professional Engineer as to the compliance with the requirements of the aforementioned filling and backfilling specifications. This certified compaction report shall be submitted as directed by the Department's Quality Assurance.

The cost for all labor, materials, and equipment necessary and required to place, compact, sample and test provided acceptable backfill material shall be deemed included in the prices bid for all contract items of work. No separate or additional payment will be made for this work.

(M) LIGHTWEIGHT FILL

Lightweight fill shall be placed in uniform layers of 10 in., unless Contractor proves by testing that thickness can be increased, but in no case shall lift thicknesses be greater than 12 in. In confined areas vibratory plate compaction equipment shall be used (5 hp to 20 hp) with a minimum of two passes in 6 in. lifts for a 5 hp plate and 10 in. lifts for a 20 hp plate.

The Contractor shall take all necessary precautions when working adjacent to the lightweight fill to ensure that the material is not over compacted. Construction

equipment, other than for placement and compaction, shall not operate on the exposed lightweight fill.

(N) MONITORING

Contractor shall install settlement monitoring monuments at finished subgrade level at a frequency of two monuments per 100 ft of length along East River Park. One monument shall be installed adjacent to the cut-off wall along the esplanade and one monument shall be installed 50 ft inland at locations approved by the Engineer. Settlement monitoring shall be conducted weekly for a period of three months after completion of filling work, or until negligible settlement is detected, as determined by the Engineer. A weekly report shall be submitted to the Engineer for review and approval.

4.11.8 MEASUREMENT.

(A) EARTH EXCAVATION FOR STRUCTURES, EXCAVATION OF RIP RAP AND MISCELLANEOUS FILL, AND EXCAVATION OF FILL ON AND BEHIND THE ESPLANADE

Excavation within the limits of the work except for structures for which the contract prices include the cost of earth excavation, will be measured and allowed to the following limits:

Condition	Payment Limits
For streets	Above the depth specified and between side limits specified.
For uncovering rock between grade and rock subgrade…….	Below grade and above the rock surface.
For the removal of boulders, loose fragments of rock, tree stumps, roots and unsatisfactory material.	Below the depth specified and between side limits as directed.
For dry retaining walls….	To depth specified and to vertical planes passing through the neat lines of the footings of the walls.
For masonry walls (except dry rubble), culverts and drains (except pipe drains)……..	To depths specified and to vertical planes passing one (1') feet outside of the neat line of the structure.

(B) ROCK EXCAVATION IN STREETS, TRENCHES AND STRUCTURES

When rock surfaces in streets or trenches are uncovered, the Engineer shall be notified in order that the Engineer may make necessary measurements. Rock excavated or blasted before such measurements are made will not be paid for.

The qualities of rock to be measured for payment under each Rock Excavation item shall be the volume of ledge rock actually removed from within the following payment limits:

Condition	Payment Limits
For streets	Above rock subgrade and between side limits specified.

For walls, culverts and other lines specified	Below rock subgrade to depths and to the payment structures

(C) ADDITIONAL INCREMENTAL COST TO EXCAVATE ROCK AT DEPTHS GREATER THAN FIVE (5') FEET IN TRENCHES AND FOR STRUCTURES

For rock excavation within trenches and for structures, where the depth of rock excavation exceeds 5 feet below grade, that quantity of rock removed below five (5') feet of grade will be measured, under Item ESCR-4.11 BAA, for an additional incremental payment over and above that made for rock excavation under Item 4.11 AA.

(D) FILL, PLACE MEASUREMENT

All filling required to complete the work, between the ground surface as determined by the Engineer before the work of filling is commenced and the surfaces specified, and between rock subgrade and the surfaces specified, will be measured in place after compaction.

No payment or allowance will be made for:

(1) sinkage, shrinkage, and settlement;

(2) backfilling holes below grade caused by the removal of boulders, loose fragments of rock, tree stumps, roots and other unsatisfactory material;

(3) backfilling to original ground surface for culverts, drains, basin connections, and between structures and sides of excavations;

(4) fill which may be spread out beyond the embankment slopes specified;

(5) spaces occupied by subsurface structures over one (1) cubic foot in volume when the placement or construction of such structures is made on newly placed fill and is started while fill operations are in progress.

The spaces occupied by curbs, crosswalks, flagging, concrete sidewalks, gutters, culverts, drains, basin connections, manholes, receiving basins, seepage basins, inlets, and gas or water pipes or any appurtenances thereof, will not be deducted from the volume of filling to be paid for when the aforesaid structures are placed or constructed after filling operations have been completed and excavation of the newly placed fill is required for such placement or construction.

(E) FILL, VEHICLE MEASUREMENT

All fill required to complete the work of filling on unstable ground by vehicle measurement, between the limits specified, will be measured in cars, trucks, etc., at the place of deposit. In computing the amount of fill to be paid for, one (1) cubic yard of measured material in the vehicle will be paid for as eight-tenths (0.8) of a cubic yard of fill. For carload and truckload deliveries, only water level loads will be accepted and no allowance will be made for any crown or peak of the load.

(F) SELECT GRANULAR FILL, PLACE MEASUREMENT

The quantity of select granular fill to be measured for payment shall be the number of cubic yards of select granular fill used outside the limits of trench excavation, as ordered in writing by the Engineer, measured in place after compaction.

No payment or allowance will be made for fill placed beyond the limits specified.

(G) SELECT GRANULAR FILL, VEHICLE MEASUREMENT

All select granular fill required to complete the work of filling on unstable ground by vehicle measurement, between the limits specified, will be measured in cars, trucks, etc., at the place of deposit. In computing the amount of select granular fill to be paid for, one (1) cubic yard of measured material in the vehicle will be paid for as eight-tenths (0.8) of a cubic yard of fill. For carload and truckload deliveries, only water level loads will be accepted and no allowance will be made for any crown or peak of the load.

No payment or allowance will be made for fill placed beyond the limits specified.

(H) LIGHTWEIGHT FILL, PLACE MEASUREMENT

The quantity of lightweight fill to be measured for payment shall be the number of cubic yards of lightweight fill used outside the limits of trench excavation, as ordered in writing by the Engineer, measured in place after compaction by the cubic yard.

No payment or allowance will be made for fill placed beyond the limits specified.

(I) CRUSHED STONE FILL FOR L-WALL DRAINAGE, PLACE MEASUREMENT

The quantity of crushed stone for L-Wall drainage to be measured for payment shall be the number of cubic yards of crushed stone fill along the concrete L-wall at the esplanade, as ordered in writing by the Engineer, measured in place after compaction.

No payment or allowance will be made for crushed stone placed beyond the limits specified.

(J) SETTLEMENT MONITORING

The settlement monitoring shall be measured on a lump sum basis for the 3 month monitoring period. Start of the monitoring period shall be coordinated with and as approved by the Engineer.

4.11.9 PRICE TO COVER.

(A) EARTH EXCAVATION FOR STRUCTURES

The contract price per cubic yard for earth excavation for structures shall cover the cost of all labor, materials, equipment, and insurance required to complete the work of earth excavation within the contract limits, in full compliance with the requirements of the specifications, without regard to the subsequent use of the excavated materials.

(B) ROCK EXCAVATION IN STREETS, TRENCHES AND STRUCTURES

The contract price bid per cubic yard for rock excavation shall cover the cost of all labor, materials, equipment, and insurance required to complete the work of rock excavation within the contract limits, in full compliance with the requirements of the specifications without regard to the subsequent use of the excavated material.

In addition, included in the unit prices bid hereunder for rock excavation shall be the cost of all labor, material, plant, and equipment required to furnish and deliver acceptable select granular fill material required to fill the voids left by the removal of ledge rock.

(C) ADDITIONAL INCREMENTAL COST TO EXCAVATE ROCK AT DEPTHS GREATER THAN FIVE (5') FEET IN TRENCHES AND FOR STRUCTURES

The contract price bid per cubic yard for the additional incremental cost to excavate rock at depths greater than five (5') feet in trenches and for structures, shall cover the cost of all additional labor, materials, equipment required to complete the work of rock removal at depths exceeding five (5') feet below grade. Payment under this item will be made in addition to that made under Item ESCR-4.11 AA.

(D) EXCAVATION OF RIP RAP AND MISCELLANEOUS FILL, EXCAVATION OF FILL ON AND BEHIND THE ESPLANADE

The contract price bid per cubic yard of Rip Rap and Miscellaneous Fill and for Excavation of Fill on and Behind the Esplanade shall cover the cost of all additional labor, materials, equipment required to complete the removal of the material to the grades shown on the Contract Drawings.

(E) FILL

The contract price per cubic yard for Fill, Place Measurement or Vehicle Measurement, shall cover the cost of all labor, materials, and equipment required to complete the work of filling within the contract limits in full compliance with the requirements of the specifications. All material excavated within the limits of the work which is used as filling will be paid for as filling.

When there is no price for Fill, the cost of furnishing and depositing any Fill required shall be covered by and included in the contract prices bid for all respective items of work.

(F) SELECT GRANULAR FILL

The contract price per cubic yard for Select Granular Fill, Place Measurement or Vehicle Measurement, shall cover the cost of all labor, materials, plant, equipment, insurance, and samples required to furnish and deliver the clean select granular fill material and to do all work incidental thereto, all in accordance with the Contract Drawings and Specifications and as directed by the Engineer.

(G) LIGHTWEIGHT FILL

The contract price per cubic yard for Lightweight Fill, Place Measurement, shall cover the cost of all labor, materials, plant, equipment, insurance, and samples required to furnish and deliver the clean lightweight fill material and to do all work incidental thereto, all in accordance with the Contract Drawings and Specifications and as directed by the Engineer.

(H) CRUSHED STONE FILL FOR L-WALL DRAINAGE

The contract price per cubic yard for Crushed Stone Fill for L-Wall Drainage shall cover the cost of all labor, materials, plant, equipment, insurance, and samples required to furnish and deliver the clean select granular fill material, including the PVC weep holes with screen, as shown on the drawings, and to do all work incidental thereto, all in accordance with the Contract Drawings and Specifications and as directed by the Engineer.

(l) SETTLEMENT MONITORING

The contract price for the settlement monitoring shall be lump sum and cover the cost of all labor, materials, plant, equipment, insurance, and reporting required to successfully complete the monitoring over the specified period.

Payment will be made under:

Item No.	Item	Pay Unit
ESCR-4.11 AA	ROCK EXCAVATION IN STREETS, TRENCHES AND STRUCTURES	C.Y.
ESCR-4.11 AS	EARTH EXCAVATION FOR STRUCTURES	C.Y.
ESCR-4.11 BAA	ADDITIONAL INCREMENTAL COST TO EXCAVATE ROCK AT DEPTHS GREATER THAN FIVE (5) FEET IN TRENCHES AND FOR STRUCTURES	C.Y.
ESCR-4.11 CA	FILL, PLACE MEASUREMENT	C.Y.
ESCR-4.11 CB	FILL, VEHICLE MEASUREMENT	C.Y.
ESCR-4.11 CC	SELECT GRANULAR FILL, PLACE MEASUREMENT	C.Y.
ESCR-4.11 CD	SELECT GRANULAR FILL, VEHICLE MEASUREMENT	C.Y.
ESCR-4.11 LW	LIGHTWEIGHT FILL, PLACE MEASUREMENT	C.Y.
ESCR-4.11 RR	EXCAVATION OF RIP RAP AND MISCELLANEOUS FILL	C.Y.
ESCR-4.11 RM	EXCAVATION OF FILL ON AND BEHIND THE ESPLANADE	C.Y.
ESCR-4.11 CW	CRUSHED STONE FILL FOR L-WALL DRAINAGE, PLACE MEASUREMENT	C.Y.
ESCR-4.11 M	MONITORING OF SETTLEMENT AT FINISHED SUBGRADE FOR 3 MONTHS	L.S.

END OF SECTION

SECTION ESCR-4.14 – STEEL REINFORCEMENT IN CONCRETE

4.14.01 INTENT.

This section describes installation of Steel Reinforcement in Concrete.

4.14.02 DESCRIPTION.

Steel Reinforcement for Concrete shall be of steel bars or welded steel wire fabric used in the floodwall, floodgate foundations, esplanade, and park structures, as specified and as shown on the Contract Drawings.

4.14.03 MATERIALS

(A) Steel reinforcement shall comply with the requirements of the following sections:

Steel Bars -- Section 2.23

Welded Steel Wire Fabric -- Section 2.25

(B) Steel reinforcement shall be epoxy-coated in accordance with ASTM A775 for steel bars and ASTM A884 for welded wire fabric, unless otherwise noted. Supplier and applicator shall be on the NYSDOT approved list (https://www.dot.ny.gov/divisions/engineering/technical-services/technical-services-repository/alme/pages/890-1.html)

(C) Size and placement shall be as specified and as shown on the Contract Drawings.

(D) Dowel and anchor bars, if required, shall be of a type, size and placement as specified and as shown on the Contract Drawings. The type of filler material used for anchoring shall be as specified on the Contract Drawings.

(E) Shop drawings of reinforcing steel showing the location and type of supports and tie wires shall be submitted to the Engineer for approval before any work covered by these drawings is undertaken.

(F) Taper threaded terminators must be positive-locking taper threaded type anchors meeting ASTM A615 Grade 60, and ASTM A970 Class HA. Threading must be done using equipment approved by the terminator manufacturer. Terminators must be installed per the manufacturer's written requirements.

Any errors discovered in these drawings will be corrected by the Engineer, but failure to discover errors shall not relieve the Contractor of responsibility, and any incorrect work resulting therefrom shall be corrected by the Contractor at no expense to The City.

The Contractor shall obtain the Engineer's approval of the proposed reinforcement before ordering.

4.14.04 METHODS.

(A) FABRICATION AND PROTECTION

Steel reinforcement bars shall be delivered in bundles or fabricated mats, and shall have the manufacturer and size of steel identified by attached metal tags when one-quarter (1/4") inch or less in size and by rolled raised symbols or letters when greater than one-quarter (1/4") inch, or by other means acceptable to the Engineer. Where reinforcement bars are delivered in bundles, they shall be securely wired. Bars shall be identified with heat number marked on attached tag.

Bar mats shall have bars of the size and spacing required and be made up in sections of the length and width required. They shall be fastened together in an approved manner at each intersection.

Reinforcement bars shall be protected at all times from mechanical injuries and from the weather and, when placed in the work, shall be free from injurious dirt, defects, paint and oil, and have a workmanlike finish. Bars which will remain exposed for some time after being placed in the work shall, if directed, be immediately coated with thin grout composed of equal parts of cement and sand.

Steel wire fabric shall be protected from moisture, and, when placed in the work, shall be free from grease, injurious rust, dirt or other foreign substances.

(B) BENDING BARS

Reinforcement bars shall be bent cold to the exact shapes shown on the Contract Drawings and, if required, in conformity with approved templates. Bars having kinks or bends not shown on the plan will be rejected.

(C) SPLICES AND LAPS

Reinforcement bars under flexural stress shall be of the full lengths required, or if permitted, be spliced with approved clamps or other approved devices which will transfer the full working stress of the bar. Reinforcement bars under temperature and shrinkage stresses shall be as long as can be conveniently used. Where necessary, laps shall be as directed. Laps shall be not less than forty (40) times the nominal diameter of the bars. Splices and laps shall be staggered. The distance between splices and laps and adjacent bars, and the distance between a splice or lap and the exposed surface of concrete shall be not less than two (2”) inches, or as shown on the plan.

Welded steel wire fabric shall have transverse or longitudinal end members overlapping each other by not less than a full mesh length or width respectively. Overlapping sheets shall be securely and properly fastened together.

(D) SUPPORTS

Steel reinforcement shall be supported at the specified depth in such a manner that no displacement will occur during concreting operations. It shall be supported either on approved devices or upon a layer of concrete which has been evenly struck off. The method of supporting the steel at the proper elevation shall be as approved by the Engineer. Bar supports shall be non-conductive material or plastic bar supports.

(E) PLACING

Reinforcement bars shall be placed, spaced, securely fastened together and held in their positions in an approved manner until the concrete is placed around them.

Steel wire fabric shall be laid in sheets which shall be straight and true to form and shall be securely held in position by approved methods so that they will be in their prescribed position after the concrete has been thoroughly compacted.

No concrete shall be deposited until the Engineer has inspected the placing of the reinforcing steel and has given permission to place the concrete. All concrete placed in violation of this provision will be rejected and removed at the Contractor’s own expense.

(F) EPOXY COATING REPAIRS

Repair sheared and cut ends and damaged coating with an epoxy patching material conforming to ASTM A775 (AASHTO M284) in accordance with the patching material manufacturer's recommendations.

(G) MECHANICAL ANCHORS

Reinforcing bar anchorage in the form of taper-threaded terminators shall be provided for pile plugs at the locations indicated on the Contract Drawings, and as directed by the Engineer.

The terminators shall be installed on-site, prior to placement of the cast-in-place concrete pile plugs. The taper-threaded terminators shall be of the size indicated on the Contract Drawings.

4.14.05 MEASUREMENT.

The weight of steel reinforcement bars to be paid for will be that of all reinforcement bars incorporated in the work, as required, which shall be computed from theoretical lengths and weights of bars.

The weight of steel wire fabric to be paid for will be that of all material incorporated in the work, as required, which shall be computed from the theoretical lengths, widths and weights.

The number of epoxy-coated anchor rods to be paid for will be inclusive of all drilling, specified length of reinforcement bars, and filler material incorporated into the work as required.

4.14.06 PRICE TO COVER.

The contract price per pound for Epoxy-Coated Steel Reinforcement shall cover the cost of all labor, materials, equipment, insurance, and incidentals required to furnish and install coated reinforcement complete in place in full compliance with the requirements of the specifications, and to furnish such samples for test as may be required.

The contract price per Epoxy-Coated Anchor Rod shall cover the cost of all labor, materials, equipment, insurance, and incidentals required to furnish and install the anchor rod, along with any filler materials, in place and in full compliance with the requirements of the specifications.

Payment will be made under:

Item No.	Item	Pay Unit
ESCR-4.14	EPOXY-COATED STEEL REINFORCEMENT	LBS.
ESCR-4.14 AR	EPOXY-COATED ANCHOR ROD	EACH

END OF SECTION

SECTION ESCR-5 – GROUND IMPROVEMENT WITH STONE COLUMNS

5.01 INTENT.

This section describes the detailing, furnishing, installing, monitoring, and testing of Stone Column up to the lines and grades designated on the Contract Documents, and as Specified herein, for use in the flood protection system as ground improvement. This Specification addresses the following two applications: (1) reinforcement and (2) soil densification between columns.

(1) Reinforcement refers to the contribution of the columns to the overall strength and stiffness of the soil mass. This is particularly applicable for cohesive soil or soils with a high fines content (i.e., material finer than the No. 200 sieve), where there is little to no improvement between columns, but is also applicable to cohesionless soils.

(2) Soil densification between columns refers to the gain in strength and stiffness of matrix soils due to column installation. This is only applicable to cohesionless soil and can be verified by in-situ testing (i.e., SPT, CPT) between adjacent column locations. In addition to the two main applications provided above, stone columns provide a means for excess porewater pressure to dissipate during a seismic event, thus mitigating the site against liquefaction potential.

The Contractor shall be responsible for selecting stone column parameters, equipment, and construction methods to meet the specified requirements of the Engineer. Design, consisting of area replacement ratio and depth of the elements or structures created by stone column has been performed by the Engineer and shown on the Contract Drawings. Detailing to construct the required elements or structures shall be by the Contractor.

5.02 DESCRIPTION.

(A) Scope of Work

The work shall consist of installation, monitoring, and testing of the stone columns within the limits indicated on the Contract Drawings, specifically Reaches C, D, E, and F along the East River, to meet the performance criteria presented in Paragraph 5.13 of this Specification Section.

In connection with the stone column program, as shown on the Contract Drawings, the Contractor shall provide all labor, materials, and equipment to accomplish the following items of work:

a. If required, pre-drilling of holes as necessary and disposal or stockpiling of all spoil.

b. Construction of the stone column to the lines and grades on the Contract Documents.

It shall be the Contractor’s responsibility to determine and implement the systems and criteria to ensure that the specified performance is achieved.

(B) References

The most recent version of the following testing methods shall be employed:

a. ASTM C29 Standard Test Method for Bulk Density (“Unit Weight”) and Voids in Aggregate

b. ASTM C88 Standard Test Method for Soundness of Aggregate by Use of Sodium Sulfate or Magnesium Sulfate

c. ASTM C127 Standard Test Method for Density, Relative Density (Specific Gravity), and Absorption of Coarse Aggregate

d. ASTM C131 Standard Test Method for Resistance to Degradation of Small-Size Coarse Aggregate by Abrasion and Impact in the Los Angles machine

e. ASTM D1241 Standard Specification for Materials for Soil-Aggregate Subbase, Base, Surface Courses

f. ASTM D1586 Standard Test Method for Standard Penetration Test (SPT) and Split-Barrel Sampling of Soils

g. ASTM D5778 Standard Test Method for Electronic Friction Cone and Piezocone Penetration Testing of Soils

(C) Definitions

Down-Hole Vibrators are specially-designed, high-energy depth vibrators. The horizontal vibrations are created by a motor and rotating eccentric weight located near the tip of the vibrator. Extension tubes are bolted to the vibrator to allow it to be lowered to the necessary treatment depth.

Bottom Feed Vibrators are down-hole vibrators which are equipped with a tremie pipe through which the aggregate is fed to the tip of the vibrator. This equipment is most often used in soil conditions which are too soft or cohesionless to remain open when pre-drilled.

Down-Hole Tampers are proprietary high-energy impact apparatus. The vertical tamping energy is provided by a hammer which is connected to a round, beveled tamper. The apparatus is lowered into a pre-drilled hole to the required treatment depth.

Bottom Feed Displacement Mandrel Systems are another type of proprietary high-energy impact apparatus. The hollow-shaft mandrel is used to convey aggregate below the tamper foot at the mandrel tip. Placed aggregate is displaced by the mandrel into the surrounding soil and compacted by the tamper foot during successive re-penetrations. The apparatus is driven or pushed to the required treatment depth prior to aggregate placement.

(D) Subsurface Conditions

Borings completed within the limits of the project encountered varying thicknesses of very loose to medium dense fill layer underlain by silty sand or sandy till overlying weathered rock. Clay was also encountered in some isolated cases.

Although it may not be shown on the soil profile, the contractor shall anticipate that some obstructions such as, rocks, boulders, wood, debris, gravel, or concrete may still exist below the proposed surface elevation.

5.03 MATERIALS.

The crushed stone for stone column backfill shall be clean, hard, unweathered stone free from organics, trash, or other deleterious materials. When subjected to the magnesium sulfate soundness test (ASTM C88), the percent weight loss shall be no more than 15%. When tested according to ASTM C131, the crushed stone shall have maximum loss of 40 percent at 500 revolutions.

(A) Down-Hole Vibrator Method: The backfill aggregate shall consist of hard, angular to sub-angular durable rock fragments, with the majority of particles in the range

of 1/8th inch to 1-1/2 inches such as ASTM C33 Size No. 57 or shall be other graded aggregate selected by the Contractor and approved by the Engineer. The aggregate shall have been successfully used in the modulus test.

(B) Down-Hole Tamper Method:

Aggregate used for columns constructed above the water table shall be Type I, Grade B in accordance with ASTM D1241, or shall be other graded aggregate selected by the Contractor and approved by the Engineer.

For aggregate used for columns constructed below the water table, the gradation shall be the same as Type I Grade B, except that particles passing the number 40 sieve shall be eliminated. Alternately, No. 57 stone or other stone selected by the Contractor may be used and approved by the Engineer. The aggregate shall have been successfully used in the modulus test.

When Type I Grade B material is used, potable water or other suitable sources shall be used to increase the aggregate moisture content when required.

(C) Displacement Mandrel Method: The backfill aggregate shall meet the same requirements as listed in Paragraph 5.03 B for the down-hole tamper method.

5.04 EQUIPMENT.

(A) Down-Hole Vibrator

Should the Contractor use a down-hole vibrator, the vibrator shall be capable of providing a minimum 70 HP rated energy and a centrifugal force of 15 tons. For soil densification, an appropriate metering device shall be provided at such a location that inspection of amperage increase may be verified during the operation of the equipment. The metering device may be an ammeter directly indicating the performance of the vibrator tip. Complete equipment specifications shall be submitted to the Engineer prior to commencement of the fieldwork.

(B) Down-Hole Tamper

Should the Contractor use a down-hole tamper, the tamper shall have a diameter that is at least 85% of the pre-drilled hole diameter, have beveled sides, and be long enough to reach the full depth of the pre-drilled hole. The tamper shall have a minimum Construction Industry Manufacturer’s Association (CIMA) rating of 1,200 ft-lb and shall apply direct downward impact energy to each lift of aggregate. Complete equipment specifications shall be submitted to the Engineer prior to commencement of the fieldwork.

(C) Displacement Mandrel Systems

Should the stone column contractor use a displacement mandrel system, the specially designed mandrel shall have a bottom tamper foot diameter of at least 50% of the column design diameter and be long enough to reach the full column design depth. The tamper foot shall be capable of applying a minimum 15 ton static force augmented by dynamic vertical ramming energy to the full design depth. Complete equipment specifications shall be submitted to the Engineer prior to commencement of the fieldwork.

5.05 INSTALLER QUALIFICATIONS.

(A) The stone column installation shall be performed by a Specialist Stone Column Installer ("Installer") with at least five years of documented experience in stone columns.

(B) The Installer shall provide experienced management, supervisory and key personnel to implement the aggregate column program.

(C) Identify full-time stone column equipment operators who have been directly responsible for stone column installation for at least 5 projects in the last 5 years. Provide a detailed resume of the equipment operator's experience and qualifications.

(D) Include in the resumes for supervisor and the equipment operator a list of referenced projects, the project start and completion dates, total quantity of stone columns installed, and a detailed description of the project, site conditions, and subsurface conditions. The project description shall include details of the stone column materials, the equipment and technique used to install the stone columns, the average and maximum length of stone column installed, the client name and address, the name and telephone number of the representative of the consultant and owner for whom the work was performed.

(E) The Installer must ensure that procedures and documentation conform to these specifications.

5.06 SUBMITTALS.

The following shall be submitted to the Engineer for approval prior to stone column work:

(A) Installer qualifications per subsection 5.05 above.

(B) At least 30 calendar days before beginning stone column installation, identify the proposed source of the stone materials and supply to the Engineer.

(C) The following shall be submitted to the Engineer by the Contractor three weeks prior to the start of the work:

- Resumes of the management, supervisory, and key personnel.
- A ground improvement calculation package based on information contained in the Contract Drawings, prepared by an engineer licensed in the state of New York that demonstrates that the program achieves the specified performance criteria as specified in this Specification Section.
- The Contractor will be required to submit representative test results and the materials will be based on certification. Contractor submitted certification and representative rest results required are as follows:

  a. Gradation in accordance with AASHTO T-27.

  b. Specific Gravity in accordance with ASTM C127.

  c. Density of loose select material in accordance with ASTM C29.

  d. Density of compacted select material in accordance with ASTM C29.

- A ground improvement QA plan, as detailed in Paragraph 5.12 of this Specifications.
- Work procedures and control criteria.
- A shop drawing for review, indicating the spacing, location, and depth of the stone columns to achieve the criteria outlined in this specification.
- A stone column installation plan that includes as a minimum the following information:

  a. The configuration of the installation equipment including size, type, weight, maximum pushing force, and vibratory hammer rated energy.

  b. Detailed description of proposed installation procedures.

  c. Proposed methods and equipment for pre-augering or spudding, if required.

  d. Provide a description of spoil disposal. If the use of water is used for installation, provide a detailed description for controlling and disposing of all water as well as any sediment.

  e. Submit documentation of the successful application of the proposed stone column installation operations.

  f. Determine the amount of stone anticipated per stone column and submit the method for determining the amount of stone installed per stone column (i.e. number of hoppers or skips).

(D) The following shall be submitted to the Engineer by the Contractor during the work:

- Accurate daily records that include the type and size of compaction equipment and predrill auger diameter used (if required), and a shop drawing indicating the as-constructed location, bottom depth, and identification number for each aggregate column.
- A record for each stone column that includes a log of the stone consumption and average diameter per 5-foot increment, energy used to compact the column per 5-foot increment, column identification number, bottom depth, column length, time to construct the column, and a note of any obstructions or other problems encountered during column installation.
- Any change in the subsurface conditions observed during the work.

(E) The following shall be submitted to the Engineer by the Contractor after the work is completed:

- Report of post-treatment verification testing to include uncorrected field SPT blow count values, calculations of the normalized SPT blow count values, and a summary of the results, prepared by an engineer licensed in the State of New York.
- A report documenting the observations and results of the tests. This report will certify that the minimum normalized SPT blow count values and/or static settlement criteria have been achieved within the improvement zone as detailed in Paragraph 5.12.

- As-built drawings indicating the location, bottom depth, and identification number for each stone column.
- Other documents that may be required by the Engineer (i.e., a warranty covering the quality of the work).

5.07 SITE INSPECTION.

(A) Inspect the site prior to the start of operations to verify the depth ground improvements can be constructed using the proposed equipment.

(B) Prior to commencing work, examine the following: existing site conditions, Contract Drawings, including records of existing utilities and other existing subsurface structures, and Geotechnical Subsurface Data Reports.

(C) Data on indicated subsurface conditions is provided solely for convenience of the Contractor..

(D) If an adjacent building is within 25 ft of the aggregate column work area, a relevant building examination shall be performed prior to initiating Work to document preexisting cracks/damage. The building must also be monitored for movement during any work within 50 ft of the structure. The work shall be stopped, and the Engineer notified if any building settlement is observed.

5.08 CONSTRUCTION REQUIREMENT.

(A) Construct stone columns by bottom feed method at the locations shown on the Contract Drawings, and in accordance with this Specification or as directed by the Engineer.

(B) Construct the stone columns to the depths required, using the methods necessary to penetrate to the required depth, including but not limited to pre-augering through stiff and dense layers that may be present, as well as obstructions from existing construction.

(C) At all times, protect structures (new or existing), underground utilities and other construction from damage caused by stone column installation. Damaged materials or structures shall be replaced or repaired to the satisfaction of the Engineer at no additional cost to the City.

(D) Install the stone columns to the minimum required Area Replacement Ratio (ARR) with the minimum ARR indicated on the Contract Drawings. The ARR is based on the spacing between the stone columns, the shape of the layout of the stone columns (e.g. triangular or square) and diameter of the stone columns.

(E) Verify the location of existing underground utilities before starting stone column installation operations. If utility lines are to remain in place, provide protection from damage during installation operations.

(F) Consult with the Engineer immediately for directions as to the required procedure if uncharted or incorrectly charted piping or other utilities are encountered during execution of work. Cooperate with City and public or private utility companies in keeping their respective service and facilities in operation. Repair damaged utilities to satisfaction of utility department at no additional cost to the City.

(G) Ensure that existing utilities serving facilities occupied by City or others are not interrupted, except when permitted in writing by the Engineer and then only after temporary utility services have been provided.

(H) Construct a test section at the location indicated on the Contract Drawings, or within the park adjacent to the existing waterfront at agreed upon location with the Engineer. The test section shall be used to verify the Stone Column Installer's equipment and procedures achieve the requirements contained in the Contract Drawings. Vibration monitoring must also be performed during the construction of the test section. At the completion of the test section, a report including all the information specified in Paragraphs 5.06 D and 5.06 E of this Specification shall to be submitted to the Engineer for evaluation. Based on the results of the test section the Engineer will determine whether the Stone Column Installer's proposed procedure meets the requirements of this specification. Additionally, based on the results of the test area and measured vibration levels, the Engineer will verify location of the stone columns as provided, or if an adjustment in location is necessary. Based on the test results, Contractor may propose a refusal criteria to be applied in locations where tip elevation is not reached. The refusal criteria must be submitted to the Engineer for approval prior to installation of production stone columns,

(I) To ensure that stone columns are not installed at locations designated for future structural elements, install the stone columns only at the locations shown on the Contract Drawings. Advanced written authorization from the Engineer is required prior to relocating any stone column. The request to relocate a stone column shall indicate the stone column number, the proposed stone column location, the revised stone column location and why relocating the stone column is necessary.

5.09 STONE COLUMN CONSTRUCTION.

The general procedure for stone column installation shall be as follows:

(A) Stable Ground Conditions: The following general procedures shall be followed when the pre-drilled hole remains open during construction.

- Pre-drilling to the design depth will be performed with an auger diameter equal to the finished column diameter.
- Down-Hole Vibrator Method: The quantity of aggregate initially added shall be such that the vibrator tip is able to penetrate to within 12 inches of the design depth. The vibrator will be raised and lowered repeatedly, such that on each re-penetration, the tip of the vibrator advances to within 12 inches of the previous penetration depth.
- Down-Hole Tamper Method: Following placement of the first 12-inch lift of aggregate, the tamper is to be lowered to the top of the aggregate and activated. The full energy of the impactor and weight of the excavator shall be used for at least 30 seconds per lift, and subsequent lifts shall not exceed 12 inches in thickness.

(B) Unstable Ground Conditions: The following general procedures will be followed when a pre-drilled hole will not remain open before or during column construction.

- Down-Hole Vibrator Method: If the hole will remain temporarily stable, the hole may be filled with aggregate to a level above the instability as long as the vibrator is still able to penetrate to within 1 foot of the pre-drilled depth. If the hole will not remain temporarily stable, a Bottom Feed Down-Hole vibrator may be used.

- Down-Hole Tamper Method: A casing with a minimum outside diameter equal to 100% of the column diameter is advanced through the unstable zone to a depth where the soil is stable. If the bottom of the hole is unstable, the casing shall be advanced to the full treatment depth. The first 12-inch lift of aggregate will be placed, and the tamper lowered to the top of the aggregate. The full energy of the impactor and weight of the excavator shall be used for at least 10 seconds per lift, and subsequent lifts shall not exceed 12 inches in thickness.
- Displacement Mandrel Method: A hollow-shaft mandrel equipped with a tamper foot and sacrificial cap is driven or pushed to the column design depth. The tamper foot shall be repeatedly raised and lowered to place and compact aggregate. Each compacted lift thickness shall not exceed 12 inches.

(C) Obstructions: Stone columns shall be constructed within 6 inches of the design location. Obstructions encountered during excavation or drilling that will prevent installation of the stone columns to design depth or cause the stone column to stray from its specified location during installation shall be removed. To the extent the obstructions are shown in the geotechnical report, removal of obstructions shall be performed at no additional cost to the City. Obstructions include, but are not limited to, boulders, timbers, concrete, bricks, utility lines, etc., that prevent installing the stone columns to the required depth or cause the stone column to drift from the required locations. Dense natural rock or weathered rock shall not be deemed as obstructions.

5.10 OBSTRUCTIONS.

(A) Subsurface strata may contain rubble, concrete, reinforced concrete slabs, timber piles, steel, bricks, stones, seawalls, abandoned foundations, utilities and other materials that can obstruct stone column operations. Where unknown obstructions are encountered during the installation of stone column, the Contractor shall remove or predrill obstruction or install additional stone columns, with the approval of the Engineer.

(B) Each situation shall be resolved on a case-by-case basis. If such conditions are encountered, the Contractor shall notify the Engineer in writing, and provide all pertinent information relating to the nature, depth, plan location coordinates, expected extent of the obstruction, and proposed procedures to overcome the obstruction.

(C) The Contractor may elect to remove or pre-drill through the object or submit an alternate stone column layout pattern, subject to the acceptance of the Engineer and at no additional cost to the City. Additional or abandoned column locations will be paid at the standard rate per cubic yard for stone columns.

5.11 CONTAINMENT, COLLECTION, AND DISPOSAL OF SPOIL RETURN.

(A) At all times during stone column operations, the site shall be maintained cleared of all debris and water. Spoil return shall be piped or channeled to tanks or other collections structures. The Contractor shall regularly dispose of all waste materials in accordance with DEP requirements and all other agencies having jurisdiction.

(B) All the soil collection, containment, and disposal methods for stone column installation shall be shown on the shop drawings in the Contractor’s submittals to the Engineer prior to the start of operations. The Contractor shall be responsible

for and incorporate all sedimentation and turbidity control measures required by applicable federal, state, and city regulations.

(C) The Contractor shall take all necessary precautions and implement measures to prevent any spoil return, other spoil material or stockpiles materials from entering the storm drain structures, drainage courses, and other utility lines or from leaving the site via surface runoff. The Contractor shall prevent the migration of spoil return, spoil material, or stockpiled materials into any surface water body, beyond the immediate limits of stone column operations.

5.12 FIELD QUALITY ASSURANCE.

(A) Inspections

A ground improvement QA plan shall be prepared by the Contractor before commencement of work and submitted to Engineer for approval prior to any production work.

Monitoring and logging of stone column operations for both test and production work shall be done by the Contractor and submitted to the Engineer.

The Contractor will provide site observation and documentation to ensure the performance of the stone column work. This inspection may include the following: recording of predrill hole depth, observance of the procedures, and recording of compaction energy information.

A sample of the backfill material shall be submitted to the Engineer for a grain size distribution analysis to establish the suitability, the cost of which will be borne by the Contractor. Certification of grain size distribution provided by the quarry may be submitted in lieu of a sample.

(B) SPT Verification Testing

Testing to evaluate specification compliance will be provided by the stone column contractor and will consist of at least one SPT boring per 22,500 ft^2 (150 ft by 150 ft) improved area at locations indicated by the Engineer.

The SPT verification testing shall be conducted in compliance with the following criteria:

- Testing at each SPT location shall be performed at 2.5 ft intervals through the entire depth of the improved soil zone.
- The normalized SPT blow count shall be equal to the sum of the hammer blows required to drive the sample from 6” to 18” below the cleanout depth adjusted for overburden pressure and for a hammer efficiency of 60%.
- SPT shall be conducted in accordance with ASTM D1586.
- SPT shall be conducted at midpoint locations between adjacent stone columns. Failure to satisfy the minimum normalized SPT blow count criterion requires the installation of additional stone columns at the Contractor’s expense. The Engineer may elect to perform additional SPT verification testing at the SPT unit price.
- In lieu of borings, the Contractor may choose to perform Cone Penetrometer Test Soundings (CPTs) for the entire depth of the improved soil. CPTs, if conducted, shall be performed in accordance ASTM D5778.

5.13 PERFORMANCE CRITERIA.

(A) For areas indicated on Contract Drawings where stone column is to be used as ground improvement, an area replacement ratio of 16.7% (minimum), shall be required.

(B) Additionally, in-situ test methods (i.e., SPT and CPT) are to be performed and the following criteria needs to be achieved

- Static settlement calculated based on the results of SPT or/and CPT should be not more than one inch for a footing size of 15 ft X 15 ft with a load of 2,500 psf.
- The minimum normalized SPT blow counts or CPT qc in the improved zone for cohesionless soil shall be such that a minimum FS of 1.1 is achieved against liquefaction for the design Earthquake with a PGA of 0.33g and a Magnitude of 5.5.

If a stone column is installed in an incorrect location or does not satisfy the specified tolerances, the Contractor shall install an additional column near the rejected column at a location approved by the Engineer. Alternate remedial procedures will also be acceptable only if they are approved by the Engineer. Unless the rejection is caused by obstruction, refusal in rock or dense soil, the cost of all labor and material required for the additional column shall not be the responsibility of the City and shall be borne by the Contractor.

5.14 MEASUREMENT

The quantity of stone columns to be measured for payment shall be by the cubic yard, measured to the nearest cubic yard per column, within only the neat plan area of the proposed stone column shown on the Contract Drawings or approved by the Engineer. The volume shall be determined by multiplying the neat area within this zone times the actual depth of the stone column. Additional quantities of stone column installed by the Contractor or that are outside the limits of the stone columns shown on the Contract Drawings without the acceptance of the Engineer will not be measured for payment.

5.15 PRICE TO COVER.

The contract unit price for stone columns shall cover the cost of all labor, materials, plant, equipment, insurance, samples, testing, and incidentals required to furnish and install the stone column within the plan area coverages over the depths and limits shown on the Contract Drawings, in full compliance with the requirements of this Specification. Stone Columns that do not meet the specific performance requirements shall be satisfactorily repaired or replaced by the Contractor at no additional cost to the City.

Payment will be made under:

Item No.	Item	Pay Unit
ESCR-5	STONE COLUMNS FOR GROUND IMPROVEMENT	C.Y.
ESCR-5.TP	STONE COLUMNS TEST PROGRAM	L.S.

END OF SECTION

SECTION ESCR-5.1 – GROUND IMPROVEMENT WITH RIGID INCLUSIONS

5.1.01 INTENT.

This section describes the detailing, furnishing, installing, monitoring, and testing of CMC/APGD/ORTD/RI/GCC (definitions provided in Paragraph 5.1.02), hereafter referenced as rigid inclusions up to the lines and grades designated on the plans and as specified herein that will be used in the flood protection system as ground improvement. The Contractor shall be responsible for selecting rigid inclusion parameters, equipment, and construction methods to meet the specified requirements of the Engineer. Design, consisting of area replacement ratio and depth of the elements or structures created by rigid inclusion has been performed by the Engineer and is shown on the Contract Drawings. Detailing to construct the required elements or structures is by the Contractor.

5.1.02 DESCRIPTION.

(A) Scope of the Work

The work shall consist of detailing, furnishing, installing, monitoring, and testing of rigid inclusions up to the lines and grades designated on the plans and as specified herein. Rigid inclusions are being considered for Reaches G, H, I, and J.

The installation of the rigid inclusions shall also include the hauling, stockpiling, removal, and disposal of excavation spoils resulting from the installation process of the rigid inclusions. The excavated material is all assumed to be unsuitable and shall be wasted and the possession of the Contractor, unless found suitable for reuse in accordance with these Specifications. The cost of installation of the rigid inclusions shall include the cost of hauling, stockpiling and disposal, of the excavated material.

(B) List of Approved Rigid Inclusion Types and Vendor Information are listed below:

- Controlled Modulus Column (CMC) by Menard, or their affiliate Nicholson Construction.
- Auger Pressure Grouted Displacement Piling (APGD) by Berkel & Company Contractors, Inc.
- Omega Rotary Torque Displacement Pile (ORTD) by Malcolm Drilling Company.
- Rigid Inclusions (RI) by Hayward Baker.
- Geo-Concrete Columns (GCC) by Tensar- GEOPIER FOUNDATIONS

(C) References

The publications referred to in this specification are by the basic designation only, and the latest edition of the publications shall be applicable.

(D) Definitions

- Rigid Inclusions: Rigid inclusions may consist of CMC, APGD, RI, GCC, or ORTD. The purpose of the rigid inclusions is to provide ground improvement.

Rigid inclusions construction shall be conducted utilizing a displacement approach where minimal spoil is generated.

- Demonstration Test Rigid Inclusion: Demonstration Test Rigid Inclusion is a rigid inclusion that is installed at non-production rigid inclusion locations, adjacent to the waterfront, at a location agreed upon with the Engineer. Vibration monitoring shall be conducted during the installation of the demonstration test rigid inclusion. This test rigid inclusion shall be installed as demonstration to verify the installation technique, to assist in selecting location of load tests, develop installation criteria, and identify installation sequence. The rigid inclusions that will be selected for static load tests shall either be installed prior to production of rigid inclusions as verification load test, or during production installation to proof load test the rigid inclusions. Rigid inclusions installed prior to production rigid inclusions are to allow for selection, performance and evaluation of static load tests as well as developing of the installation criteria by the Engineer. For each additional different rig brought to the site, additional demonstration rigid inclusions shall be installed to assess the rig's capabilities. Based on the demonstration test results, the Contractor may propose a refusal criteria to be applied in instances where tip elevation is not reached. The refusal criteria must be submitted to the Engineer for approval prior to installation of production rigid inclusions.

- Working Pad: The working pad shall consist of an 18-inch layer of ¾" densely graded crushed stone that is placed and compacted above the existing ground surface after the topsoil is removed. The purpose of the working pad is to provide a stable bearing material for the rigid inclusion installation.

(E) Subsurface Conditions

Borings completed within the limits of the project encountered varying thicknesses of very loose to medium dense fill layer underlain by clay, silty sand or sandy till overlying weathered rock.

Installation of the rigid inclusions to the minimum tip elevation shall typically require penetration of the stone working pad. Although it may not be shown on the soil profile, the contractor shall anticipate that some obstructions such as, rocks, boulders, pavement, wood, debris, gravel, or concrete may still exist below the proposed working pad elevation. The cost to install the rigid inclusions through these obstructions shall be paid at the obstruction clearance rate.

5.1.03 MATERIALS.

(A) Working Pad

The working pad shall be 3/4 in. densely graded crushed stone.

(B) Grout

For CMC, APGD, RI, or ORTD, Contractor shall meet the following grout requirements:

- Portland Cement: Shall conform to requirements of ASTM C150 or AASHTO M85, and Materials Method (MM) 10 of NYSDOT.

1. Type II cement.

2. Cement shall be from an Approved List of Materials and Equipment of Manufacturers and/or Suppliers issued by the Materials Bureau of NYSDOT. If the brand or type of cement is changed during the course of the project, additional grout mix tests shall be conducted to ensure consistency of quality and performance.

- Fly ash shall meet the requirements of ASTM C618 or AASHTO M295 and Section 711-10, Fly Ash of the Standard Specifications and Procedural Directives of Material Bureau of NYSDOT for Class F.
- Sand shall meet the requirements of Section 703-04, Grout Sand of the Standard Specifications of NYSDOT.
- Admixtures shall meet the requirements of Section 2.09, Admixtures of Standard Highway Specifications Volume II of NYCDOT.
- Water shall conform to requirements of Section 712-01, Water of the Standard Specifications of NYSDOT.
- Grout Mix

    1. Proportion by weight to produce a grout capable of being satisfactorily pumped and of penetrating and filling all voids.
    2. Minimum Compressive Strength:
    3. 2,000 psi at 7 days as required prior to pile integrity testing
    4. 4,000 psi at 28 days
    5. Minimum Flow Cone Rate: 10 seconds to 25 seconds with modified 3/4-inch opening flow cone, ASTM C939.
    6. The grout mix shall be designed utilizing fluidifiers as needed to maintain the range of acceptable fluid consistency (flow cone rate) for a period of at least 2 hours.

- A ready-mix truck shall be supplied from an approved ready-mix plant with certified plant inspection according to Section ESCR-3.05.08, Concrete Mixing, Transporting and Discharging.

(C) Concrete for GCC Construction

- All materials, proportioning, air entraining, mixing, slump, and transporting of PCC shall be according to Section 3.05, Concrete of ESCR Specification except as modified herein.
- Water/cement ratio: not to exceed 0.45.
- Use Class D PCC mixture with a slump of 6 inches ±1.5 inches.
- Portland cement: meet the requirements of ASTM C150 or AASHTO M85 Type II and Section 701-01, Portland Cement of the Standard Specifications.
- Fly ash shall meet the requirements of ASTM C618 or AASHTO M295 and Section 711-10, Fly Ash of the Standard Specifications and Procedural Directives of Material Bureau of NYSDOT for Class F.

- Sand shall meet the requirements of Section 703-07, Concrete Sand of the Standard Specifications of NYSDOT.
- Admixtures shall meet the requirements of Section 2.09, Admixtures of Standard Highway Specifications Volume II of NYCDOT.
- Do not use GGBFS.
- Minimum Compressive Strength:
    1. 4,000 psi at 28 days.
    2. 2,000 psi at 7 days as required prior to pile integrity testing.
- A ready-mix truck shall be supplied from an approved ready-mix plant with certified plant inspection according to Section ESCR-3.05.08, Concrete Mixing, Transporting and Discharging.

5.1.04 EQUIPMENT.

(A) Utilize machines or combinations of machines and equipment that are in good working condition, safe to operate, cause no vibration, and will produce the results specified herein.

(B) Utilize equipment that is capable of advancing the rigid inclusion through the subsurface materials efficiently to meet the project schedule.

(C) The equipment shall be of sufficient size and capacity, and capable of installing rigid inclusions to the minimum depths shown in the plans or that required by the design, whichever is deeper.

(D) The equipment shall be capable of installing rigid inclusions in the presence of very dense granular soils and/or obstructions, where encountered.

(E) The rigid inclusion equipment must be equipped with installation monitoring capabilities including, as minimum, the following: (a) applied torque (b) applied static down pressure (crowd), (c) advance rate (penetration speed), (d) grout pressure, and (e) grout volume.

(F) Rigid inclusions equipment shall be suitable for displacement installation, where minimal spoil is generated.

5.1.05 SUBMITTALS.

(A) A certification that states that no techniques that cause vibration to install the element are used in the installation.

(B) Shop drawings that include spacing, diameter, installation procedure, sequence of construction with sufficient details including transitions areas, planned cut-off and tip elevations, material, proposed equipment, and mix design.

(C) A load testing program to verify the design in accordance with the requirements of this special provision. The load testing program should comply with the following:

- It shall be performed prior and during production of rigid inclusions.

- The rigid inclusion production shall only start upon completion of four successful load tests and after the Engineer issues the final tip elevation, and installation criteria of the rigid inclusions.
- The load test shall be performed on rigid inclusion in accordance with ASTM D1143. Verification rigid inclusion shall be tested to a maximum load equal to 200% of the design load. The location of the test rigid inclusion will be selected by the Engineer with input from the Contractor and depending on the work and traffic control sequence. The Contractor's schedule must accommodate the time required to perform and evaluate the load test and issue the installation criteria by the Engineer.
- The Contractor, at their expense, may be required to repeat the construction of a test section if the results of the test program do not meet the project requirements. The test program shall confirm that the resultant soil-cement properties met the required design criteria prior to the Contractor proceeding with production work.

(D) Calculations for the load test reaction piles including diameter, type, reinforcement, depth as well as the reaction frame and beams. All details and supporting calculations shall be submitted for review by the Engineer. Design the reaction piles and frame for minimum two times the maximum test load. All shop drawings and supporting calculations shall be signed and sealed by a Professional Engineer registered in the State of New York.

(E) Calibration records load cells, hydraulic jacks, pumps and pressure gauges should be submitted at least 7 days prior to performing the load testing.

(F) A complete load test report should be submitted within 3 days of completion of each test. The Engineer shall evaluate the results of the load tests and issue the final tip elevations and planned spacing for the production rigid inclusions within 14 days from the receipt of the last load test report. Shop drawings and any supporting calculations should be sent to the Engineer at least 15 days prior to start the installation of the production rigid inclusions. Each rigid inclusion shall receive a reference number, which will be indicated on the shop drawings. The shop drawing submittal shall also show cut-off elevations, typical sections, and detail drawings, as required.

(G) As-built plans for the installed rigid inclusions based on actual locations and tip elevations. The surveyed locations shall be signed and sealed by a licensed surveyor and tip elevations shall be certified by the Contractor's Professional Engineer registered in the State of New York.

(H) Rigid inclusion installation records as specified. Installation records shall include all recordable information versus penetration depth, including applied torque, applied static down pressure (crowd pressure), advance rate (penetration speed), grout pressure, and grout volume.

(I) A work plan including details of the equipment, sequence of construction, and method of installation should be submitted to the Engineer for review. The submittal should include a detailed quality control plan and explain how the work plan will comply with all the requirements of the project safety plan.

(J) Documentation for all imported materials including pertinent laboratory test results prior to arrival on site.

5.1.06 SITE PREPARATION.

(A) Inspect the site prior to the start of operations to verify the depth ground improvements can be constructed using the proposed equipment.

(B) Excavation for the working pad shall not begin until the results of the load testing program on rigid inclusions has been submitted and approved by the Engineer.

(C) The final excavation for the working pad shall be made using an excavator equipped with a smooth-edged bucket to minimize disturbance of the in-situ soils. The prepared subgrade shall consist of in-situ soils compacted to moisture content within ±2% of optimum moisture content. If compaction is not practical due to natural water contents far above optimum and/or wet weather conditions, the in-situ soils shall be over excavated to a depth of 12 inches and replaced with compacted granular fill. Any organic or otherwise unsuitable soils shall be removed and replaced with compacted granular fill.

5.1.07 WORKING PAD CONSTRUCTION.

(A) Prior to construction of the working pad, topsoil and other unsuitable materials shall be removed.

(B) Construct the working pad which consists of at least 18-inch layer of ¾" densely graded crushed stone, and proof roll and compact it.

(C) Any rutting of the working pad that occurs during installation of the rigid inclusions should be measured and the Engineer notified. If practical, when rutting occurs, reroute construction traffic to avoid further damage to the underlying in-situ soils, or remove and replace the rutted material with compacted granular fill.

5.1.08 INSTALLATION OF RIGID INCLUSION

(A) Provide adequate number of drilling rigs to meet the project schedule considering all facets of the project.

(B) Evaluate the site and subsurface conditions and assess any need for working platforms. Such platforms, preparatory work, and material needed is considered part of the means and methods and no additional payment or time will be granted toward such work.

(C) Install a total of 8 demonstration rigid inclusions at non-production locations throughout the site(s) at locations agreed upon with the Engineer. Demonstration rigid inclusions are necessary to assess any variation in soil conditions and select the locations of the rigid inclusions that will be load tested and to be used in the development of the production rigid inclusion installation criteria. These demonstration rigid inclusions shall be installed before the load tests and before installation of production rigid inclusions. The demonstration rigid inclusion shall be paid at the same unit rate as the production rigid inclusion and no separate mobilization or additional cost shall be borne by the City. Vibration monitoring to be performed during the installation of the demonstration rigid inclusion.

(D) Perform a total of four load tests prior to the start of rigid inclusion production. One load test shall be performed for each of Reaches G, H, I, and J, where rigid

inclusions are proposed. The load test results will be signed and sealed by the Contractor's Professional Engineer and submitted to the Engineer. No payment shall be made for load tests which were unsatisfactorily performed as determined by the Engineer.

(E) Layout and Tolerances

Surveying: Prior to installation of the rigid inclusions, each rigid inclusion location shall be surveyed by a licensed surveyor. Provide all survey layouts, maintain utility clearances and provide any required coordination with the Engineer and any other local, state, and federal agencies having jurisdiction, prior to the start of construction. The location of each rigid inclusion shall be marked using numbered utility flags.

Plan position: The center of the completed rigid inclusion shall be within 3 inches of the plan location.

Verticality: The axis of the completed rigid inclusion shall not deviate more than 2% from vertical. The verticality of the mast of the rig shall be checked by the operator before start of the installation for each rigid inclusion. The operator shall indicate on the daily drilling log for each rigid inclusion that verticality was within tolerance by checking the appropriate box on the installation log.

Diameter: The completed rigid inclusion diameter shall not deviate more than 10% from the plan diameter.

(F) Rejection: Rigid inclusions improperly located or installed beyond the maximum allowable tolerances or reported to be defective as a result of pile integrity testing, shall be abandoned and replaced with new rigid inclusions unless the Contractor and the Contractor's designer propose a remedial measure which is acceptable to the Engineer, either of which will be done at no additional cost to the City.

(G) Schedule: Mobilize and maintain sufficient equipment, materials, and personnel to complete the work in accordance with project milestones, and Contractor shall coordinate operations with all other aspects of the project.

(H) Installation Sequence: Install the rigid inclusions in accordance with the sequence detailed in the approved work plan. If adjacent rigid inclusions are observed to be influenced by the installation of a neighboring rigid inclusion, the installation sequence shall be modified to prevent disturbance of already constructed rigid inclusions. Any required modifications to the sequence, or mitigation of rigid inclusions deemed unusable due to disturbance, shall be completed at no additional cost to the City or extension in the project schedule.

(I) Rigid inclusion spacing and length as noted in the contract plans will be optimized based on the static load tests. Any required modification to the sequence based on the optimization shall be completed at no additional cost to the City or extension in the project schedule.

(J) Depth: Install the rigid inclusions to the minimum tip elevation, or deeper as required to found the rigid inclusions on a suitable bearing stratum, as determined by the Engineer.

(K) Obstructions: Subsurface obstructions may include but are not limited to boulders, timbers, concrete, bricks, utility lines, foundations, slabs, etc. that prevent rigid

inclusions to be installed to the required depth. In the event that obstructions are encountered during installation of a rigid inclusions that cannot be penetrated with reasonable effort, one or more of the following procedures will be used:

- Position the element a short distance not more 1.5 feet away from the original position.
- Pre-drill the obstruction.
- Install additional elements to bridge over the obstruction.

(L) Any change made to the design or rigid inclusion layout because of obstructions shall be approved by the Engineer. An as-built submittal should be provided to the Engineer no later than 7 calendar days after the modification has been performed on site. This submittal shall be signed and sealed by the Registered Professional Engineer responsible to the Contractor. All elements that are abandoned due to obstructions or equipment malfunction shall be completely backfilled with grout.

(M) The Contractor will be paid for the abandoned rigid inclusion elements per the contracted price per cubic yard of rigid inclusions. No additional compensation or time for any items related to obstructions shall be awarded for delays, or mobilization to the relocated position of the rigid inclusion.

(N) Cut-off Elevation

Cutoff the rigid inclusions 12 inches below the top elevation of the working pad, or slightly higher to allow any required trimming or removal of low strength material at the top of the rigid inclusion.

(O) Ground Heave

Heave of the working pad is expected due to rigid inclusion installation. The rigid inclusions may need to be cut down prior to construction of upland work. Any cut to the rigid inclusion shall be performed using methods that do not crack or damage the rigid inclusion. Such work is considered incidental and shall be performed at no additional cost to the City.

(P) Axial load test on selected rigid inclusions shall be performed after the design strength has been achieved. The working pad should be excavated to the original ground surface at the test location. Perform the excavation, load test setup, load testing, and backfill the excavation, in a single shift. The load test loading schedule given below shall be followed:

- Apply the load in increments of approximately 25 percent of the design load up to 200 percent of the design load.
- Maintain the applied load at each increment for 5 minutes during loading and unloading except at 100 and 200 percent of design load. Record the deformation and strain two minutes after applying the test load and just prior to applying the next load increment.
- At 100 and 200 percent of the design load, hold the load for at least 10 minutes. Deformation readings shall be recorded at 1, 2, 4, 6, and 10 minutes. If the average deformation between 1 and 10 minutes increases by more than 0.04

inches, hold the load for 60 minutes and record the deformation every 10 minutes.

- After completing the required hold time at 200 percent of the design load, unload the rigid inclusion in increments of 25 percent of the design load until the alignment load is reached.

(Q) Disposal of Excavation Spoils

Stockpile all spoil material, including any topsoil and spoils generated by rigid inclusion installation, at the locations designated for spoil storage. Handling and disposal of spoils shall be performed at no additional cost to City.

5.1.09 OBSTRUCTIONS.

(A) Subsurface strata may contain rubble, concrete, reinforced concrete slabs, timber piles, steel, bricks, stones, seawalls, abandoned foundations, utilities and other materials that can obstruct rigid inclusion operations. Where unknown obstructions are encountered during the installation of rigid inclusion, the Contractor shall remove or predrill obstruction or install additional rigid inclusions, with the approval of the Engineer.

(B) Each situation shall be resolved on a case-by-case basis. Payment shall be based on an agreed upon unit rate for handling obstructions. If such conditions are encountered, the Contractor shall notify the Engineer in writing, and provide all pertinent information relating to the nature, depth, plan location coordinates, expected extent of the obstruction, and proposed procedures to overcome the obstruction.

(C) The Contractor may elect to remove the object or submit an alternate rigid inclusion layout pattern, subject to the acceptance of the Engineer and at no additional cost to the City. Alternately, subject to the Engineer's approval, the Contractor may terminate a rigid inclusion column or drill through the obstruction using impact, vibratory, drilling methods, or any combination of these as the Contractor deems necessary to allow for the advancement to the specified tip elevation as indicated on the Drawings. Additional or abandoned column locations will be paid at the standard rate per cubic yard for rigid inclusion columns.

5.1.10 CONTAINMENT, COLLECTION, AND DISPOSAL OF SPOIL RETURN.

(A) At all times during rigid inclusion operations, the site shall be maintained cleared of all debris and water. Spoil return shall be piped or channeled to tanks or other collections structures. The Contractor shall regularly dispose of all waste materials in accordance with the DEP requirements and all other agencies having jurisdiction. Spoil generated from Reaches G, H, I, and J may be found to be environmentally contaminated.

(B) All the soil collection, containment, and disposal methods for rigid inclusion installation shall be shown on the shop drawings in the Contractor's submittals to the Engineer prior to the start of operations. The Contractor shall be responsible for and incorporate all sedimentation and turbidity control measures required by applicable federal, state, and city regulations.

(C) The Contractor shall take all necessary precautions and implement measures to prevent any spoil return, other spoil material or stockpiles materials from entering

the storm drain structures, drainage courses, and other utility lines or from leaving the site via surface runoff. The Contractor shall prevent the migration of spoil return, spoil material, or stockpiled materials into any surface water body, beyond the immediate limits of rigid inclusion operations.

5.1.11 QUALITY CONTROL / QUALITY ASSURANCE.

The following describes the minimum inspection and testing required in the Contractor's Quality Control (CQC) Plan and Program for the work of this section and is for the CQC only. The implementation of the Contractor Quality Control Program does not relieve the Contractor from the responsibility to provide the work in accordance with the contract documents, applicable codes, regulations, and governing authorities.

(A) Supervision, inspection, and records

The Contractor shall have an on-site field engineer to manage all of the QC activities on the project including pile integrity testing, grout sampling (if applicable), and other testing. These tests should be performed as defined in the Design Submittal and approved by the Engineer. Load tests, production rigid inclusions, subgrade preparation, and working pad shall be done under the direct supervision of a professional geotechnical engineer registered in the State of New York from the Contractor’s side. The geotechnical engineer shall have supervised a minimum of five similar deep ground improvement projects.

An accurate installation record shall be kept for all rigid inclusions. The record shall indicate the location, length, cut-off elevation, date and time of construction, applied torque, applied static down pressure (crowd pressure), advance rate (penetration speed), grout pressure, and any other pertinent installation details as indicated in the Design Submittal and approved by the Engineer. Any unusual conditions encountered during installation should be immediately reported to the Engineer and any corrective measures recorded. Daily records shall be signed by the Contractor’s superintendent and by the inspector. A complete tabulation of all records pertaining the approved rigid inclusions installation shall be certified by the Contractor’s engineer and shall be delivered to the Engineer no later than 14 days after the completion of the rigid inclusion work. All testing and inspection documents certifying that the rigid inclusions and working pad were installed based on the construction and installation criteria shall be reviewed and approved by the Contractor’s engineer.

Pertinent installation data as defined in the Design Submittal and approved by the Engineer should be provided on a daily basis. These documents shall be prepared continuously as the production progresses and shall be submitted to the Engineer no later than one working day after the installation of a rigid inclusion. The Contractor has to ensure that the Engineer has complete access at all times to the data for the rigid inclusion installation, as required.

(B) Working Pad

Perform proof-rolling of the top of the working pad prior to and following completion of the rigid inclusion installation. The proof-rolling shall cover the entire work area, and the wheel pass spacing shall be equal to the axle length of the dump truck.

All required testing will be completed to the satisfaction of the Engineer at no additional cost to the City.

Following installation and curing of the rigid inclusions, proof-roll the working pad using a fully loaded dump truck. Where deflections more than 1/4 inch are observed, remove the working pad, over excavate 12 inches and reconstruct the working pad. The excavation shall not damage the rigid inclusions.

Backfilling and raising grades to required subgrade levels shall be conducted in a controlled manner as specified in Section ESCR-4.11.

(C) Concrete and Grout

Conduct strength testing of the concrete in accordance with ASTM C39. For concrete testing, cured cylinders measuring 3 inches in diameter by 6 inches high are required. For testing grout, 2-inch cubes are used. For the cylinders and molds, molds and a curing environment conforming to the requirements of ASTM C39 should be provided. At a minimum, prepare a set of four test cylinders or cubes for each 50 cubic yards of concrete or grout placed or a minimum of two sets of four cylinders or cubes per day (whichever is greater). One cylinder or cube from each set shall be tested for strength at 3, 7, and 28 days, and final one shall be stored as a reserve sample. Certified strength test results shall be provided to the Engineer for acceptance.

(D) Rigid Inclusions

Pile Integrity Testing: Pile Integrity Testing (PIT) shall be performed on all the inclusions used for load test and approximately 25% of the rigid inclusions. The PIT shall be performed in accordance with ASTM D5882. The production elements selected for the PIT shall be at the discretion of the Engineer based on daily records indicate likelihood of anomalies in the inclusions.

The PIT shall be performed by a firm qualified to do such testing. Documentation of the firm's qualifications shall show that it has successfully performed PIT testing for at least 5 years, and for a minimum of five similar projects. A list of previous projects including name, description, number of tests performed, and contact person with phone number shall be provided.

The firm performing PIT will be responsible for testing and assessing the integrity and condition of the pile, including but not limited to significant reductions in pile cross-sectional area (necking) or pile material strength/stiffness above the pile toe. In addition, the firm performing PIT shall confirm the pile lengths where clear pile toe reflection is obtained or state to which pile length the test appears to be conclusive.

The PIT submittal shall include:

1. A record of each rigid inclusions tested
2. Low-Strain Dynamic Testing (LSDT) Report: In accordance with referenced standard for test performed.
3. Submit report to the Engineer within 48 hours of test completion
4. Installation Record
5. Pile Length
6. Unusual occurrence(s) during installation

7. A report with complete interpretation of PIT results.

(E) Strain Gauges

The test rigid inclusion shall be instrumented with five levels of strain gauges. The strain gauges shall be Geokon model 4911, 4911A or approved equivalent. The strain gauges shall be compatible with a real time monitoring system. The test rigid inclusions shall include a rebar to facilitate installation of the strain gauges. The test rigid inclusion may include, to the Contractor's choice, a lightly reinforcement cage for the top five feet of the rigid inclusion to avoid any risk while transmitting the load effectively into the rigid inclusion. Strain gauges elevations can be assumed preliminarily at the soil layering breakdown, 2 feet below to top of rigid inclusion and 2 feet above the rigid inclusion tip elevation. Strain Gauges final elevations shall be adjusted by the Engineer on site based on the confirmation borings and length of the rigid inclusion.

Take initial readings 24 hours after completing installation and testing of each strain gauge. During the load test, the strain gauges shall be monitored prior to construction of production rigid inclusions. After monitoring the strain gauges during load tests, the strain gauges cables or wires shall be routed through a buried schedule 80 PVC pipe and shall be connected to the real time monitoring system to be monitored during placement of embankment. Strain gauges shall be compatible with the real time monitoring system. Readings shall be taken daily and made available online to the Engineer. Any strain gauge that malfunctions or becomes inoperable during the load test shall be replaced and the load test shall be redone by the contractor at no additional cost to the City.

After the load tests, the strain gauges will continue to be monitored as filling operations are performed. A minimum of three readings weekly shall be taken using real time automated monitoring system for each strain gauge as backfilling operations are being performed.

Additional provisions for instrumentation related to the grading works are included in the Contract Documents.

5.1.12 PERFORMANCE CRITERIA.

(A) For areas indicated on Contract Drawings where rigid inclusions are to be used as ground improvement, an area replacement ratio of 7.1% (minimum) using 18 in. diameter rigid inclusion, shall be required.

(B) Allowable load per rigid inclusion, to be verified by pile load testing, shall be 30 T.

(C) If a rigid inclusion is installed in an incorrect location or does not satisfy the specified tolerances, the Contractor shall install an additional rigid inclusion column near the rejected column at a location approved by the Engineer. Alternate remedial procedures will also be acceptable only if they are approved by the Engineer. Unless the rejection is caused by obstruction, refusal in rock or dense soil, the cost of all labor and material required for the additional column shall not be the responsibility of the City.

5.1.13 MEASUREMENT AND BASIS OF PAYMENT.

(A) Rigid Inclusions

Measurement for Rigid Inclusions shall be in cubic yard, and will be measured using the cut-off elevation to tip elevation of installed rigid inclusions (rounded to the nearest foot) and the design cross-section. This includes:

- Furnishing and installing demonstration and production rigid inclusions
- Performing detailed layout design
- Performing site preparation and load transfer platform
- Handling and disposal of cuttings
- Performing any associated inspection and laboratory testing
- Performing rigid inclusion load testing
- Performing PIT for demonstration and production rigid inclusions

(B) Load Transfer Platform (Working Pad)

Measurement for the Rigid Inclusions Working Pad shall be in cubic yard, and will be the quantity shown in the plans. Payment is full compensation for furnishing and installing working pad, and performing inspection and laboratory testing.

(C) Rigid Inclusions Test Program

Measurement for the Rigid Inclusion Test Program will be on a lump sum basis. Payment is full compensation for furnishing and installing the rigid inclusion test element with strain gauges for static load test, all components for load application mechanism/reaction frame, all components for measuring load magnitude and rigid inclusion displacement, performing PIT testing on the rigid inclusion test element and assessing the results, performing load test, providing all associated supervision and inspection, record data and provide load test results report. Monitoring of strain gauges after completion of load test will be compensated as part of the rigid inclusion testing program.

(D) Obstruction Clearance
Measurement for obstruction clearance to allow for rigid inclusion placement shall be the number of linear feet, measured to the nearest half foot, of pre-drilling required to advance beyond the obstruction, to the satisfaction of the Engineer, Payment is full compensation for removal of the obstruction, including all setup, removal, and proper disposal of the removed obstruction as required.

5.1.14 PRICE TO COVER.

The contract unit price for rigid inclusion shall cover the cost of all labor, materials, plant, equipment, insurance, samples, testing, and incidentals required to furnish and install the rigid inclusion within the plan area coverages over the depths and limits shown on the Contract Drawings, in full compliance with the requirements of the specifications. Rigid inclusion that does not meet the specific performance requirements shall be satisfactorily repaired or replaced by the Contractor at no cost to the City.

Additional quantities of rigid inclusion installed by the Contractor that are outside the limits shown on the Contract Drawings without the acceptance of the Engineer will not be measured for payment.

The contract unit price for obstruction clearance shall cover the cost of all labor, materials, plan, equipment, insurance, samples, disposal, and incidentals required to pre-drill through the obstruction for proper installation of the rigid inclusion.

The contract unit price for installation of the load transfer platform shall cover the cost of all labor, materials, plan, equipment, insurance, samples, testing, and incidentals required to install the platform as shown on the Contract Drawings, in full compliance with the requirements of the specifications.

The lump sump price for the test program shall cover the cost of all labor, materials, plant, equipment, insurance, samples, testing, reporting, and incidentals required to perform the test program in full compliance with the requirements of the specifications.

Payment will be made under:

Item No.	Item	Pay Unit
ESCR-5.1	RIGID INCLUSIONS FOR GROUND IMPROVEMENT	C.Y.
ESCR-5.1-LTP	LOAD TRANSFER PLATFORM (WORKING PAD), REACHES G TO J	C.Y.
ESCR-5.1-OB	OBSTRUCTION CLEARANCE (PRE-DRILLING)	L.F.
ESCR-5.1.TP	RIGID INCLUSIONS TEST PROGRAM	L.S.

END OF SECTION

SECTION ESCR-6.20 – RIP RAP STONE

6.20.1 INTENT.

This section describes the placing of rip rap stone in the embayments at East River Park.

6.20.2 DESCRIPTION.

Rip rap stone shall be placed where indicated on the Contract Drawings or directed.

Where the material underlying the structure is unsatisfactory the unsuitable material shall be removed and replaced with rip rap stone of the size designated by the Engineer.

6.20.3 SUBMITTALS.

(A) DATA

1. Certification from stone supplier that the rip rap stone meet the specified properties and gradation

2. Surveys
   a) The Surveys, original and one copy of all field notes, cross sections, computations, computer storage disks, and all other records relating to the survey or layout of work shall be submitted to the Engineer, who will use them as necessary to verify placement of material to required line and grade.

3. Cross Sections

   a) The same scale for the cross sections shall be used as in the Contract Drawings. The cross section profile shall be digitally captured. The final cross sections and the theoretical design templates shall be superimposed over the original cross sections.

   b) Cross sections shall be taken on 25-foot intervals and shall include elevations at 1-foot ranges and at the top and toe of the slope. All stations, ranges, and elevation points taken from field books shall be clearly lettered as the profiles.

   c) In addition to the above, the original and final cross sections shall be furnished as X, Y, Z and descriptor ASCII files for each cross section line, and one X, Y, Z and descriptor ASCII file with all data included on a thumb drive or CD.

(B) STONE PLACEMENT PLAN

A detailed stone placement plan shall be submitted for approval by the Engineer prior to starting any work. The plan shall detail:

   a) The method of transporting stone from the stone source to the construction site.

   b) The method of stone placement and the type of equipment to be utilized.

6.20.4 EXCAVATION.

Excavation for the purpose of removing unsatisfactory material shall be made to the dimensions as directed.

6.20.5 METHODS.

(A) ACCEPTANCE OF MATERIALS

During construction, both prior to and after materials are delivered to the site, visual inspections and measurements of the stone materials may be performed by the Engineer.

If the Engineer, during the inspections, finds that the stone quality, gradation or weights of stone being furnished are not as specified or are questionable, re-sampling and re-testing by the Contractor shall be required. Sampling of the delivered stone for testing and the manner in which the testing is to be performed shall be as directed by the Engineer. This additional sampling and testing shall be performed at no additional cost to the City.

Any material rejected shall be removed or disposed of as specified and at the Contractor's expense.

(B) BASE PREPARATION AND GEOTEXTILE PLACEMENT

Areas on which geotextile is to be placed shall be graded and/or dressed to conform to cross sections shown on the Contract Drawings within an allowable tolerance of plus 2.0 inches and minus 2 inches from the theoretical slope lines and grades. The prepared base shall be approved by the Engineer.

Installation of geotextile shall be as specified in Section ESCR-6.68.

Immediately prior to placing the geotextile, the prepared base will be inspected by the Engineer and no material shall be placed thereon until that area has been approved.

(C) ARMOR STONE PLACEMENT

Armor stone shall meet the requirements in ESCR-2.27 and shall be placed only after the upper underlayer stone has been approved.

Armor stone shall be placed on the upper underlayer in such a manner as to produce a well-graded mass of stone with minimum voids and shall be constructed to the lines and grades indicated on Contract Drawings.

Armor stone shall be placed to its full course thickness in one operation and in such a manner as to avoid displacing the underlying material. The larger stones shall be well-distributed and the entire mass of stones shall be roughly graded to conform to the specified gradation in ESCR-2.27.

The finished slope shall be free from objectionable pockets of small stones, clusters of larger stones, or large voids. Selective placing may be required but only to the extent necessary to secure the results specified above. The desired distribution of the various sizes of armor stones throughout the mass shall be obtained, at the option of the Contractor, either by selective loading at the quarry or other source, by controlled dumping of successive loads during final placing, or by a combination of these methods.

Armor stone shall be placed from bottom to top of slope. Placing armor stone by dumping it at the top of the slope and pushing it down the slope will not be permitted. Placing armor stone by dumping into chutes or by similar methods will not be permitted.

Protection of uncompleted work is solely the Contractor's responsibility and any repairs needed to the damaged portions of already completed work shall be at no cost to the City.

Contractor shall account for variations in quantities that may need to be considered as a result of localized settlement, removal of large pieces of debris, and or field conditions. Additional quantities of stone material which may be needed to achieve the design elevations shall be at no additional cost to the City.

(D) MISPLACED STONE

Areas in the vicinity of completed stone protection shall be thoroughly examined and stone found outside the indicated cross section or limits of the stone protection shall be recovered and used in the work or disposed of at no additional cost to the City.

(E) TURBIDITY CURTAIN

A turbidity curtain shall be installed and maintained within the embayment area during stone placement operations to protect the "in water" work area. Refer to Section ESCR-9.30 for erosion and sediment control specifications. Products shall be capable of working in the below defined operational conditions:

Operational Conditions

Maximum Significant Wave Height:	2 ft
Maximum Current Speed:	2.7 knots (flood); 2.9 knots (ebb)
Water Depth:	-12 ft NAVD88 or deeper
Wind Speed:	40 miles per hour

(F) CHECK SURVEYS

Check surveys shall be performed by the Contractor to demonstrate that the armor and underlayer stone has been placed to the specified grades and thicknesses. Check surveys shall be done as the work progresses to verify lines, grades and thicknesses established for the completed work. At least one (1) check survey as specified below shall be made for each twenty-five (25) foot section as soon as practicable after completion.

Following placement of the armor stone, the cross section of the work shall be approved by the Engineer before proceeding with the next step of the work. Approval of cross sections based upon check surveys shall not constitute final acceptance of the work. Cross sections shall be taken on lines 25 feet apart, measured along the structure baseline, with readings at elevations in 1-foot ranges and at the top and toe of the slope. However, other cross section spacing and reading intervals may be used if determined appropriate by the Engineer. Additional elevations and soundings shall be taken as the Engineer may deem necessary at no additional cost.

The elevation of stone above the water surface shall be determined by the use of a leveling instrument and a rod having a spherical end of (i.e. base) six (6) inches in diameter per CIRIA (2007). The elevation of stone below water shall be

surveyed using single-beam instrument or other techniques approved by the Engineer.

(G) CONSTRUCTION TOLERANCES

Variation in slope lines and grades from the indicated slope lines and grades shall be within the tolerances specified on the Contract Drawings.

The specified tolerance for the armor and underlayer stone is for the average difference between design profiles to actual profile (i.e., mean actual profile) over a 50 ft length along the structure's axis. The tolerances on two consecutive mean actual profiles shall not be negative. Notwithstanding any accumulation of positive tolerances on the underlayer, the thickness of layer shall not be less than 80% of the nominal thickness when calculated using mean actual profiles.

The intention is that the work shall be built generally to the required elevations, slope and grade and that the outer surfaces shall be even and present a neat appearance. Placed material not meeting these limits shall be removed or reworked as directed by the Engineer at no additional cost to the City. Payment will not be made for excess material that the Engineer permits to remain in place.

Variation in slope lines and grades from the indicated slope lines and grades shall be within the tolerances specified in Table 1 per CIRIA 2007 (CIRIA/CUR C683 Chapter 9) and the Contract Drawings, or as approved by the Engineer.

Table 1: Construction Tolerances

LOCATION OF STONE	TOLERANCES
Armor Stone	± 6 inches

6.20.6 MEASUREMENT AND PAYMENT.

The quantity to be measured for payment shall be the number of cubic yards of rip rap stone placed as shown on the Contract Drawings or as ordered by the Engineer, in accordance with the specifications.

6.20.7 PRICE TO COVER.

The contract price, per cubic yard, for rip rap stone, in place, shall cover the cost of all labor, materials, plant, equipment, insurance, and incidentals required to furnish and place rip rap stone, complete, in place, and shall include all excavation (except stone excavation); the furnishing of such samples for testing as may be required; check surveys; installation of turbidity curtain; and furnishing all other necessary incidentals; all, in accordance with the Contract Drawings, the specifications and the directions of the Engineer.

Payment will be made under:

Item No.	Item	Pay Unit
ESCR-6.20	RIP RAP ROCK	C.Y.

END OF SECTION

SECTION ESCR-6.27 – DEMOLITION OF STRUCTURES

6.27.1 INTENT.

This section describes the demolition of barriers, curbs, manholes, sewers, vaults, esplanade, embayment, sheet pile bulkheads, tie rods, relieving platform decks, piles, electrical bunker sheds, irrigation pump bunker sheds, and other structures that need to be removed to facilitate the installation of the flood protection system, which includes the floodwall, floodgates, regulators/tide gate chambers, manholes, and reconstruction of adjacent elements affected by the flood protection system.

6.27.2 DESCRIPTION.

In addition to furnishing all necessary labor, materials, plant, equipment, and necessary incidentals required, the work shall include the demolition, removal and disposal of entire or portions of structures, as indicated on the Contract Drawings, specified or directed by the Engineer, together with all appurtenances, debris and refuse of all kinds, and other miscellaneous structures. Asbestos testing is required. Based on the results, abatement may be required prior to demolition. Results to be filed with DEP.

6.27.3 GENERAL.

(A) LAWS, PERMITS, ETC.

The Contractor shall comply with all laws, ordinances, statutes, rules and regulations relating to the demolition of buildings or structures; the removal and disposal of materials resulting from demolition operations; the protection of adjacent properties and the general public; and the furnishing and maintenance of passageways, guard fences and other protective facilities. The Contractor shall obtain all required permits and licenses, pay all fees and give all notices necessary for the prosecution of the work.

(B) DISPOSAL

All materials resulting from demolition operations or required to be excavated in connection with such operations, except as otherwise provided or directed, shall be disposed of by the Contractor away from the demolition site and the site of the contract work. Said materials shall not be dumped, placed, stored or disposed of within the limits of any existing or projected public street or road. The burning of debris or other demolition materials will not be permitted except as approved and authorized by the New York City Fire Department, the New York State Department of Environmental Conservation, and the Engineer.

(C) CLEAN AIR ACT

The U.S. Environmental Protection Agency (E.P.A.) requires that, under the Clean Air Act and its implementing regulations, New York City agencies must notify the E.P.A. at least ten (10) days prior to demolition of any institutional, commercial or industrial building in which asbestos is used for insulation or fireproofing. Under the demolition provisions of the National Emissions Standards for Hazardous Air Pollutants Program, the U.S. Government exercises jurisdiction over the uses of asbestos, beryllium and mercury, including their disposal.

These regulations specify that E.P.A. shall be notified of such information as to the methods of demolition to be employed, description and location of the building(s) to be demolished, and scheduled starting and completion dates. Advance

notification enables E.P.A. to send observers to the site to ensure that proper demolition procedures are being followed.

The Contractor shall therefore notify the Engineer at least twenty (20) days in advance of any building demolition work to be performed under the contract, furnishing him the information required above, so that the Engineer can notify the E.P.A. at least ten (10) days prior to building demolition work, of the said information.

(D) DAMAGES AND ACCIDENTS

The Contractor shall be responsible for all damages resulting from and due to the Contractor's demolition operations. Said responsibility shall include, but not be limited to, the grounds; buildings; structures; and portions of buildings or structures which are adjacent to the demolition site and are to remain. No additional payment or compensation will be made or allowed the Contractor for costs incurred for repairs and replacements required to satisfactorily remedy the aforesaid damages or for the settlement of any claims resulting therefrom.

The Contractor shall provide all materials, labor and machinery necessary and shall place proper and sufficient guard and fences and warning signals by day and by night for the prevention of accidents.

(E) RODENT EXTERMINATION

When required by any code, law, ordinance, statute, rule or regulation, the Contractor shall employ a licensed exterminator to rid a building or structure of rats; file an extermination certificate with the regulating agency; and submit a copy of the said certificate to the Engineer, before starting demolition operations.

(F) SALVAGE

The City assumes no responsibility for the condition or presence of salvageable materials in or on the premises. All damage to or loss of salvageable materials, whether by reason of fire, theft or other happening, shall be at the risk of the Contractor and no such loss or damage shall relieve the Contractor from any obligation under the contract or form the basis of any claim against the City.

(G) FIRE PROTECTION, ETC.

The Contractor shall furnish, employ and pay for all necessary appliances required for the adequate protection of the work against fire and to safeguard existing structures and the public. The Contractor shall at all times maintain adequate facilities for the thorough saturation of all debris and materials with water to the extent required to prevent dust arising from the work. All water used including temporary piping, connections, permits therefor, and removal of piping, when directed, shall be provided and paid for by the Contractor. Do not use water when it may create hazardous or objectionable condition such as ice, flooding and pollution.

(H) DISCONNECTING UTILITY AND PUBLIC SERVICES

a. Prior to commencement of work, the Contractor shall give notice to the New York City Department of Citywide Administrative Services to have the steam, gas and electricity to the buildings to be demolished, disconnected by the utility companies owning the services. The Contractor shall obtain certifications from the utilities that

the services have been terminated, and shall submit them to the Engineer for approval, prior to commencement of demolition operations.

b. The Contractor shall seal or plug all storm or sanitary sewers or other connections to the sewers leading from the structure to be demolished. The Contractor shall disconnect all water services and shall make the necessary arrangements with the New York City Department of Environmental Protection, Bureau of Water and Sewer Operations, to destroy or plug the tap in the City water main. The Contractor shall obtain all permits necessary to do such work prior to the commencement of demolition. All such work shall be done in full accordance with the rules and regulations of, and to the satisfaction of the City of New York Bureaus having jurisdiction thereof.

   The Contractor shall remove all gas services back to the main gas lines in the streets and the openings in the main gas lines shall be properly closed in compliance with the directions of the utility company having jurisdiction in the respective borough. All work shall be done in full accordance with the rules and regulations of, and to the satisfaction of, the utility company having jurisdiction thereof.

   Electric, telephone and other wires shall be disconnected in strict accordance with the rules and regulations of the Department of the City or State and of the company or companies having jurisdiction, control or ownership of such utilities. After disconnection has been completed, telephone poles located on the property shall be removed by the utility having jurisdiction over the poles.

c. The Contractor shall maintain and preserve all utilities, other than those covered by paragraphs a and b above, traversing the premises. Contractor shall maintain in a safe condition all street openings made by the Contractor, and shall backfill and tamp them.

d. All expenses arising from or in connection with the performance of the provisions of paragraphs b and c above shall be borne by the Contractor.

e. When existing sprinkler systems with Siamese hose connections are present in structures undergoing demolition, they shall be maintained as a non-automatic sprinkler system. Sprinkler risers shall be capped immediately below the floor being demolished maintaining the sprinkler systems on all lower floors for Fire Department use.

(I) BLASTING

Blasting of any kind shall not be permitted.

(J) CITY MONUMENTS

The Contractor shall not progress demolition operations within five (5') feet (or such greater distance which the Engineer shall direct) of any City monument which may be within the limits of or be disturbed by the herein contemplated work, nor in any manner disturb the same, but shall cease work at such places until the said monuments have been referenced and reset or otherwise disposed of, except upon special permit from the Commissioner, in accordance with the City ordinances therefor.

After permission is given to remove any monument, the Contractor shall take up and preserve such monument, and if required remove same to the nearest Department yard. The Contractor shall preserve all benchmarks, reference points

and stakes placed or established on the line of the work until authorized to remove the same.

(K) SUBMITTALS

a. Submit a schedule indicating proposed methods and sequence of operation for demolition and removals to the Engineer for review prior to commencement of Work. A pollution control plan for demolition activities shall be submitted by the Contractor not more than 30 days prior to the commencement of demolition work and must be approved by the Engineer.

(L) QUALITY ASSURANCE

a. The Refrigerant Recovery Technician shall be certified by the EPA-approved certification program.

6.27.4 METHODS.

(A) EXTENT OF REMOVAL

a. Thoroughly inspect and examine the building and premises for any hazardous materials. If any asbestos or other hazardous material is found other than what is included in the Contract and was to be removed as per Section 6.27.4.E, notify the Engineer immediately and do not commence the Work until receipt of written notification from the Engineer. Comply with all applicable regulations, laws, and ordinances concerning removal, handling, and protection against exposure or environmental pollution. Asbestos abatement is to occur prior to the demolition Work.

b. Visually inspect and photograph the adjacent areas, and structures and appurtenances of the surrounding properties. Record the existing conditions; submit all information to the Engineer.

c. Thoroughly examine the building for any of the following: Historical artifacts, including cornerstones and their contents; plaques and tablets; and other remaining articles of historic significance. If any is found (either prior to commencing demolition or during demolition Work), the Contractor must carefully remove, clean, and deliver to a NYCDPR yard within the five boroughs, as directed by the Engineer.

d. Before demolition has commenced, NYC Parks, along with the Contractor, will inspect the building(s) and the premises and identify equipment, materials, and items desired to be retained by NYC Parks in addition to those items already indicated to be salvaged. The Contractor shall remove such equipment, materials and items either before demolition or during the process of the Work and store and protect on the Site in a location designated by the Engineer.

e. Items of salvageable value that are not desired to be retained by NYC Parks are to become the property of the Contractor and may be removed from the structure as Work progresses. Transport salvageable items from site as they are removed. Storage or sale of removed items on site will not be permitted.

Remove structures to the limits shown on the Contract Drawings.

(B) PARTIAL DEMOLITION

Where the demolition consists of only a portion of a structure, the Contractor shall provide all necessary temporary shoring and support to maintain the stability of the partially demolished structure.

(C) PREPARATION AND PROTECTION

a. Employ a certified exterminator and treat building(s) in accordance with governing regulations for rodent and insect control. Submit certificate to the Engineer.

b. Protect structures, underground utilities and other construction to remain from damage caused by demolition operations. If unmarked or unknown utilities are uncovered during excavation, notify the Engineer of Record to receive further instructions prior to proceeding further. Should damage to adjacent construction or utilities occur due to Work under this Section, all costs in connection with the repair of such damage and the restoration of damaged construction to its original condition shall be borne by the Contractor.

c. Protect materials and surfaces and structure, which are to remain, from damage; if damage occurs, repair or replacement shall be made by the Contractor, to the satisfaction of the Engineer, and at the expense of the Contractor.

(D) DELAYS IN VACANCY

Structure shall be demolished as they become vacant and in coordination with all other works. There is no guarantee as to when such vacancy will occur. The Contractor will be notified when a vacancy occurs. The Contractor agrees that this has been taken into consideration and allowances have been made for delays and expenses resulting from the uncertainty of the time when a structure may be vacated and made available for demolition.

(E) REMOVAL AND DISPOSAL OF MATERIALS

All materials in structures, demolished hereunder, shall become the property of the Contractor, unless otherwise provided, and shall be removed and disposed of away from the site by the Contractor. Before issuance of a final certificate, the Contractor shall remove all falsework, temporary structures, plant of all description, equipment, and debris of every nature from the demolition area, and dispose of them away from the site.

(F) FIELD QUALITY CONTROL

Mechanical Demolition and the construction and installation of all underpinning, shoring, sheeting, and bracing required for or affecting the support and adjacent properties or buildings is subject to Special Inspection. The Contractor’s licensed professional engineer is to file all design documents.

(G) CLEAN UP

The demolition areas and the portions of the streets affected by the work shall be cleaned of all materials resulting from or used in the work to be done hereunder and shall be left in a condition satisfactory to the Engineer.

(H) IN-WATER DEMOLITION

All demolition work taking place within the water column or affecting the water column shall require the installation of a turbidity curtain along the offshore edge

of the esplanade to minimize the spreading of disturbed sediment. The turbidity curtain shall extend from the water surface down to the mudline and be deployed in the area of the demolition work. In addition, any debris or material from the demolition work that falls into the waterway shall be retrieved and disposed of by the Contractor. Refer to ESCR-9.30 for erosion and sediment control specifications.

Where indicated to be removed, the existing timber/steel piles and steel sheet piles shall be extracted and removed in their entirety to facilitate installation of the proposed cut-off wall, unless otherwise indicated on the Contract Drawings.

6.27.5 PAYMENT.

The quantity to be measured for the removal of curb, concrete barrier, embayments, and esplanade structures shall be the linear foot of removed and properly disposed structure as shown on the Contract Drawings. No payment will be made for removals taken past the specified limits.

The survey of the existing pile caps supporting the esplanade shall be included in the unit price for the demolition of the existing esplanade for Type A, Type C, Type D, Type F, and Type G. Survey data shall be required for confirmation of existing span lengths for prestressed and precast concrete beams and slabs prior to fabrication of the new superstructure components. The survey shall be performed by a New York State licensed surveyor and all survey work shall be performed in accordance with Section 625 of the NYSDOT Standard Specifications.

The quantity to be measured for the removal of concrete structures (including timber cribbing), except for the amphitheater bandshell and seating area, shall be the cubic yard of removed and properly disposed structure as shown on the Contract Drawings. No payment will be made for removals taken past the specified limits.

The quantity to be measured for the removal of the security bollards shall be the number of removed and properly disposed bollard units and the associated concrete foundation as shown on the Contract Drawings. No payment will be made for removals taken past the specified limits, nor will additional payment be made for the removal of the concrete foundation and any appurtenances.

The quantity to be measured for the removal of timber piles shall be the number of removed and properly disposed timber piles as shown on the Contract Drawings. No payment will be made for partial removals.

The quantity to be measured for the removal of miscellaneous utilities shall be the number of removed and properly disposed utility as shown on the Contract Drawings. No payment will be made for partial removals or removals taken past the specified limits.

The removal and disposal of building structures, electrical bunker sheds, irrigation pump sheds, and the amphitheater bandshell and seating area shall be on a lump sum basis as shown on the Contract Drawings and as approved by the Engineer. No payment will be made for partial removals or removals taken past the specified limits.

6.27.6 PRICE TO COVER.

The unit price bid shall cover the cost of furnishing all labor, materials, plant, equipment, insurance, disposal, and necessary incidentals required and completing the work in accordance with the Contract Drawings, the specifications and the directions of the Engineer.

Payment will be made under:

Item No.	Item	Pay Unit
ESCR-6.27 EXNE	DEMOLITION OF THE EXISTING NORTH EMBAYMENT (DEMOLITION TYPE I) (removal limits as shown on the Contract Drawings)	L.F.
ESCR-6.27 EXSE	DEMOLITION OF THE EXISTING SOUTH EMBAYMENT (DEMOLITION TYPE E1 AND E2) (removal limits as shown on the Contract Drawings)	L.F.
ESCR-6.27 PRNE	DEMOLITION OF THE EXISTING ESPLANADE STRUCTURE FOR THE PROPOSED NORTH EMBAYMENT (removal limits as shown on the Contract Drawings)	L.F.
ESCR-6.27 PRSE	DEMOLITION OF THE EXISTING ESPLANADE STRUCTURE FOR THE PROPOSED SOUTH EMBAYMENT (removal limits as shown on the Contract Drawings)	L.F.
ESCR-6.27 A	DEMOLITION OF THE EXISTING ESPLANADE TYPE A	L.F.
ESCR-6.27 B	DEMOLITION OF THE EXISTING ESPLANADE TYPE B	L.F.
ESCR 6.27 C	DEMOLITION OF EXISTING ESPLANADE TYPE C	L.F.
ESCR-6.27 D	DEMOLITION OF EXISTING ESPLANADE TYPE D (DEMOLITION TYPE D1 AND D2)	L.F.
ESCR-6.27 F	DEMOLITION OF EXISTING ESPLANADE TYPE F	L.F.
ESCR-6.27 G	DEMOLITION OF EXISTING ESPLANADE TYPE G	L.F.
ESCR-6.27 CB	DEMOLITION OF THE EXISTING CONCRETE BARRIER	L.F.
ESCR-6.27 CB.E	DEMOLITION OF THE EXISTING EMBEDDED CONCRETE BARRIER	L.F.
ESCR-6.27 CU	DEMOLITION OF THE EXISTING CONCRETE CURB	L.F.
ESCR-6.27 S	DEMOLITION OF STRUCTURES	C.Y.
ESCR-6.27 SABSE	DEMOLITION OF STRUCTURE – AMPHITHEATRE BANDSHELL AND SEATING AREA	L.S.
ESCR-6.27 SCS	DEMOLITION OF STRUCTURE - COMFORT STATION	L.S.
ESCR-6.27 AE	DEMOLITION OF STRUCTURE – AMPHITHEATER ELECTRICAL SHED	L.S.
ESCR-6.27 SFE	DEMOLITION OF STRUCTURE – SPORTS FIELD ELECTRICAL SHED	L.S.
ESCR-6.27 FBI	DEMOLITION OF STRUCTURE – FIRE BOATHOUSE IRRIGATION PUMP SHED	L.S.
ESCR-6.27 STE	DEMOLITION OF STRUCTURE – TENNIS BUILDING	L.S.
ESCR-6.27 STR	DEMOLITION OF STRUCTURE – TRACK BUILDING	L.S.
ESCR-6.27 SB	REMOVAL OF THE WILLIAMSBURG BRIDGE SECURITY BOLLARDS	EACH

Item No.	Item	Pay Unit
ESCR 6.27 SGH	DEMOLITION OF STRUCTURE – EAST RIVER HOUSING GUARD HOUSE	L.S.
ESCR-6.27 U	REMOVAL OF MISCELLANEOUS UTILITY	EACH
ESCR-6.27 TC	DEMOLITION OF THE EXISTING ROCK FILLED TIMBER CRIBBING	C.Y.
ESCR-6.27 TP	REMOVAL OF EXISTING TIMBER PILE	EACH

END OF SECTION

SECTION ESCR-6.68 – GEOTEXTILE FILTER FABRIC

6.68.01 INTENT.

This section describes the geotextile for use in the revetments inside the embayment, as well as the geotextile for use at the crushed stone fill for the L-wall drainage.

6.68.02 DESCRIPTION.

Under this section, the Contractor shall furnish and install geotextile filter fabric in the manner shown on the Contract Drawings. The purpose of the geotextile filter fabric is to provide a permeable layer which allows water but not soil particles to pass through. The geotextile filter fabric shall be installed in accordance with the Contract Drawings, the specifications and the directions of the Engineer.

Provide all labor, material, and equipment and perform all operations necessary for the complete and satisfactory installation of the geotextile. The work shall include, but not be limited to, placement of geotextile, material and associated equipment and operation used in laps or extra length; and associated material, equipment, and operations; and material and associated equipment and operations used to provide cushioning layer of sand or gravel or both to permit increase in allowable drop height of stone.

Contractor performing the Work of this section shall have at least five years minimum experience in similar projects.

6.68.03 SUBMITTALS.

(A) SAMPLES

Submit geotextile samples for testing to determine compliance with the requirements in this specification, a minimum of 60 days prior to the beginning of installation of the same textile.

(B) CERTIFICATES

Upon delivery of the geotextile, submit duplicate copies of the written certificate of compliance signed by a legally authorized official of the manufacturer. The certificate shall state that the geotextile shipped to the site meets the chemical requirements and exceeds the minimum average roll value listed in Table 1. Upon request, supply quality control and quality assurance tests for the geotextile.

6.68.04 MATERIALS.

The filter fabric for the revetment shall consist of non-woven geotextile matching or exceeding the minimum average roll values listed in Table 1. Strength values indicated in the table are for the weaker principal direction.

Table 1: Minimum Physical Requirements for Geotextile

Property	Unit	Acceptable Values	Test Method
Tensile strength	Lbf	300 (Min)	ASTM D 4632
Puncture resistance	Lbf	180 (Min)	ASTM D 4833
Trapezoidal tear	Lbf	115 (Min)	ASTM D 4533
Burst strength	psi	580 (Min)	ASTM D 3786/D 3786M
Flow rate	gpm / ft^2	65 (Min)	ASTM D 4491
Permittivity	sec^{-1}	0.8 (Min)	ASTM D 4491
Apparent opening size	US Sieve	100	ASTM D 4751
Ultraviolet degradation	%	70% at 500 hrs (Min)	ASTM D 4355

Fibers used in the manufacturing of the geotextile shall consist of a long-chain synthetic polymer composed of at least 85 percent by weight of polyolefins, polyesters, or polyamides. Add stabilizers and/or inhibitors to the base polymer, if necessary to make the filaments resistant to deterioration caused by ultraviolet light and heat exposure. Reclaimed or recycled fibers or polymer shall not be added to the formulation. Geotextile shall be formed into a network such that the filaments or yarns retain dimensional stability relative to each other, including the edges. Finish the edges of the geotextile to prevent the outer fiber from pulling away from the geotextile.

Seams are not permitted.

Geotextiles and factory seams shall meet the requirements specified in Table 1. Randomly sample geotextiles in accordance with ASTM D 4354 (Procedure Method A). Sample factory seams at the frequency specified in ASTM D 4884.

Provide all samples from the same production lot as will be supplied for the contract, of the full manufactured width of the geotextile by at least 10 feet long, except that samples for seam strength may be a full width sample folded over and the edges stitched for a length of at least 5 feet. Samples submitted for testing shall be identified by manufacturer's lot designation. For needle punched geotextile, the manufacturer shall certify that the geotextile has been inspected using permanent on-line metal detectors and does not contain any needles.

Collect samples at approved locations upon delivery to the site in accordance with ASTM D 4354 (Procedure Method B). Test samples to verify that the geotextile meets the requirements specified in Table 1. Identify samples by manufacturer's name, type of geotextile, lot number, roll number, and machine direction. Perform testing at an approved laboratory. Submit test results from the lot under review for approval prior to deployment of that lot of geotextile. Rolls which are sampled shall be immediately rewrapped in their protective covering.

The fabric shall be free of any treatment which might significantly alter its physical properties.

During all periods of shipment and storage, the fabric shall be wrapped in a heavy-duty protective covering to protect it from direct sunlight, mud, dirt, dust and other debris.

The manufacturer shall submit certified test data to cover each shipment of material.

6.68.05 CONSTRUCTION DETAILS.

(A) DELIVERY AND STORAGE

Deliver only approved geotextile rolls to the project site. All geotextile shall be labeled, shipped, stored, and handled in accordance with ASTM D4873. No hooks, tongs, or other sharp instruments shall be used for handling geotextile. Geotextiles shall be protected at all times against physical or chemical damage. Geotextiles shall be kept in the wrappings provided by the manufacturer until required for use in the works. The rolls of geotextile shall be stored on level ground and stacked not more than five rolls high and no other materials shall be stacked on top of the geotextile. Geotextile shall not be exposed to direct sunlight for longer than thirty days.

Geotextile filter fabrics which are subject to deterioration by ultraviolet rays shall be protected from sunlight during transport and storage. For those fabrics which are subject to damage from sunlight, the information on the packaging material shall warn against exposing the filter fabric to sunlight.

Prepare surface, on which the geotextile will be placed, to a relatively smooth surface condition in accordance with the applicable portion of this specification and shall be free from obstruction, debris, depressions, erosion feature, or vegetation. Remove any irregularities so as to ensure continuous, intimate contact of the geotextile with all the surface. Any loose material, soft or low-density pockets of material, shall be removed; erosion features such as rills, gullies etc. shall be graded out of the surface before geotextile placement.

(B) INSTALLATION

The filter fabric shall be spread on a prepared surface as described above and called for on the Contract Drawings or as directed by the Engineer. The fabric shall be laid loosely, so that placement of overlaying materials will not stretch or tear it. Stone placement shall be done in a manner that will not prove injurious to the fabric. Should the fabric become torn or otherwise damaged by any cause, it shall be patched by placing an additional section of geotextile filter fabric over the tear with a three-foot overlap on all sides.

Place the geotextile in the manner and at the locations shown on the Contract Drawings. At the time of installation, the geotextile shall be rejected if it has defects, rips, holes, flaws, deterioration or damage incurred during manufacture, transportation or storage. Any additional costs incurred by this rejection shall be borne by the Contractor.

The overlaying material shall be placed within a period of two (2) weeks whether the fabric is subject to damage from sunlight or not. Fabric shall be anchored in an approved manner that will hold it in position. Place the geotextile with the long dimension perpendicular to the shoreline and laid smooth and free of tension, stress, folds, wrinkles, or creases. Place the strips to provide a minimum width of 3 feet of overlap for each joint. The placement procedure requires that the length

of the geotextile be approximately 10 percent greater than the slope length. Adjust the actual length of the geotextile used based on initial installation experience.

Adjacent sheets shall be overlapped by at least thirty-six (36”) inches. Appropriate measures shall be taken to ensure required overlap exists after cushion placement. No traffic or Contractor’s equipment will be permitted to travel directly on the geotextile filter fabric.

Protect the geotextile at all times during construction from contamination by surface runoff; remove any geotextile so contaminated and replaced with uncontaminated geotextile. Replace any geotextile damaged during its installation or during placement of stone or other materials: cost of replacement shall be borne by the Contractor. Schedule the work so that the covering of the geotextile with a layer of the specified material is accomplished within 7 calendar days after placement of the geotextile. Failure to comply shall require replacement of geotextile at no additional cost to the City. Protect the geotextile from damage prior to and during the placement of stone or other materials. Before placement of stone or other materials, demonstrate that the placement technique will not cause damage to the geotextile. In no case shall any type of equipment be allowed on the unprotected geotextile.

6.68.06 MEASUREMENT.

The quantity of Geotextile Filter Fabric to be measured for payment shall be the number of square yards computed between the limits shown on the Contract Drawings or within the limits established in writing by the Engineer prior to performing the work. No quantity will be included for material used for repair of tears or for material used to provide the overlaps.

6.68.07 PRICE TO INCLUDE.

The unit price bid per square yard for this item shall include the cost of furnishing all labor, materials, plant, equipment, insurance, samples, and incidentals necessary to complete the work including the cost of preparing the surface upon which the geotextile filter fabric is placed, all in accordance with the Contract Drawings, the specifications and the directions of the Engineer.

Payment will be made under:

Item No.	Item	Pay Unit
ESCR-6.68	GEOTEXTILE FILTER FABRIC	S.Y.

END OF SECTION

SECTION ESCR-7.18 – CONTROLLED LOW STRENGTH MATERIAL (CLSM)

7.18.01 DESCRIPTION.

The work consists of mixing and placing Controlled Low Strength Material (CLSM) with or without slag at the locations shown on the Contract Drawings or where ordered by the Engineer.

7.18.02 MATERIALS.

(A) GENERAL

The Contractor shall provide CLSM containing aggregate, cement and water. It may also contain, at the Contractor's option, slag, or chemical admixtures in any proportions such that the final product meets the strength and flow consistency requirements included in this specification. The use of fly ash shall not be permitted.

Materials used in this work shall conform to the following requirements of the NYS Department of Transportation, Standard Specifications:

Portland Cement, Type 1 or Type 2:	§701-01
Aggregates:	§703-01
Chemical Admixtures:	§711-08 (The mix may include high air generators manufactured for CLSM)
Slag:	§712-12
Water:	§712-01

(B) TESTS AND CONTROL METHODS

Certification from an approved testing laboratory that the CLSM will have a 28-day compressive strength between 100 PSI and 150 PSI shall be furnished by the Contractor and provide to the Engineer prior to delivery of any materials.

Hardened mixtures shall reach a minimum compressive strength of 15 PSI within 48 hours; a long-term density between 90 to 110 PCF; and, a minimum of 20% and a maximum of 40% Air, when measured in accordance with ASTM D 6023. In order to allow for future manual excavation the 28 days density shall be 90 to 110 PCF.

Design the CLSM mix so that it sets within the time stated in the contract documents. If no set time is required by the Department, the set time shall conform with the Maintenance and Protection of Traffic scheme and requirements of the project.

The CLSM shall have a minimum diameter spread of 8 in. as determined by the following procedure to be performed by the Engineer:

- Fill a hollow plastic or metal cylinder 8 in. in length and 3 in. inside diameter with the CLSM and strike off the surface. Raise the flow cylinder in a continuous motion without rotation.
- Immediately measure the spread of the CLSM along two diameters which are perpendicular to each other.

The Contractor shall cast four (4) specimens (cylinders) for each batch in accordance with the Department's Materials Method 9.2 - Field Inspection of Portland Cement Concrete, and deliver them to a DDC's Quality Assurance (QA)

Bureau approved Material Testing Laboratory within seven days of the pour date for evaluation.

For each 50 Cubic Yard or portion thereof, the following Field Testing shall be performed to confirm the material conformance with the approved design mix:

ASTM D 6023	Unit Weight, Yield Cement Content & Air Content
ASTM D 5971	Sampling Freshly Mixed CLSM
ASTM D 4832	Preparation and Testing of CLSM
ASTM D 6103	Flow Consistency of CLSM

Prior to proceeding with subsequent construction operations, either one of the following Field Tests shall be performed on the surface of the in-place CLSM to estimate its surface bearing value and its suitability for load application.

ASTM D 6024	Ball Drop on CLSM
ASTM D 3441	Cone and Friction Cone Penetration Tests

A minimum of three (3) tests shall be performed for each 200 Square Feet or portion thereof, and evaluated against the following criteria:

ASTM D 6024 — Inspect the indentations for visible water or sheen brought to the surface by the dropping action of the ball.

If the diameter of the indentation is equal or less than 3 inches, than the CLSM is suitable for load application, provided that:

a. The surface looks similar to that before the test with the exception of the indentation, and;
b. There is no visible surface water or sheen visible in the indentation.

ASTM D 3441 — The average value of the three (3) tests shall be not less than Four (4) Tons/Square Foot. The minimum value per individual test shall not be less than Three (3) Tons/Square Foot.

7.18.03 CONSTRUCTION DETAILS.

(A) GENERAL

The Contractor shall provide all equipment for this work subject to approval of the Engineer. Mix the materials at a stationary mixing plant which is either a continuous or a batch type plant, designed to accurately proportion either by volume or by weight, so that when the materials are incorporated in the mix, a thorough and uniform mix will result.

The mix may be transported in open haul units provided the material is placed within 30 minutes of the end of mixing. Use a rotating drum unit capable of 2 - 6 rpm to transport material that cannot be placed within 30 minutes after the end of mixing. In cases where placement cannot take place within 30 minutes from the end of mixing, the material shall be transported in a rotating drum capable of 2 – 6 rpm.

Provide a mixer capable of mixing CLSM that has the specified compressive strength and flow consistency. Mix all components so as to produce a uniform product. For work involving CLSM quantities of less than two (2) cubic yards, the Engineer may permit the Contractor to use a small construction mixer.

Narrower trench widths can be employed when using CLSM due to the self-compacting properties of the material. Construction personnel and equipment are not required to be in the trench for compaction operations. Refer to the current NYSDOT Metric Standard Sheet No. M204-1, issued under EB 02-003, for Controlled Low Strength Material (CLSM) Installation Details for Circular and Elliptical Corrugated Metal Pipes, Structural Plate Pipes and Pipe Arches, and Reinforced Concrete and Other “Rigid” Pipes for additional requirements.

For installations that require construction personnel to temporarily occupy the trench, the Contractor shall follow all OSHA requirements.

(B) FILL AND BACKFILL AT STRUCTURES, CULVERTS, PIPES, CONDUITS AND DIRECT BURIAL CABLES.

The Contractor shall place the CLSM using a method approved by the Engineer, in accordance with the appropriate NYSDOT Standard Sheet for additional guidance on the use of CLSM as backfill material.

When placing CLSM for pipe backfill, discharge the material onto the top of the pipe at the center.

Do not place CLSM in contact with aluminum pipe, including connections, fixtures, etc., unless the aluminum has been coated with an approved primer.

CLSM should be kept encapsulated with soil, as it is highly erodible and disintegrates when left exposed to the environment.

7.18.04 MEASUREMENT.

The quantity to be measured for payment shall be the number of cubic yards of satisfactorily placed CLSM computed between the payment lines shown on the Contract Documents or from payment lines established in writing by the Engineer.

A deduction shall be made for pipes (based on nominal diameters) and other payment items when the combined cross-sectional area exceeds one (1) sq. ft.

Unless otherwise shown, no deduction will be made for the cross-sectional area of an existing facility. No additional quantity shall be measured for payment to make up losses due to foundation settlement, compaction, erosion, or any other cause.

Cross sectioning, for the purpose of determining quantities for payment, shall be employed only where payment lines are not shown on the Contract Drawings, and cannot be reasonably established by the Engineer.

7.18.05 PRICE TO COVER.

The unit price bid per cubic yard of CLSM shall include the costs of furnishing all labor, materials, equipment, insurance, and incidentals necessary to complete the work, except where specific costs are designated or included in another pay item of work. The unit price also includes any temporary supports for the exposed utilities which will be encapsulated in the CLSM.

Payment will be made under:

Item No.	Item	Pay Unit
ESCR-7.18	CONTROLLED LOW STRENGTH MATERIAL	C.Y.

END OF SECTION

SECTION ESCR-13 – ARCHITECTURAL CONCRETE TEXTURED FINISHES

DESCRIPTION

This work shall consist of all labor, materials, and equipment to complete the Architectural Concrete Textured Finishes as shown on the Drawings with designated patterns and textures. Work in this section is supplementary to project cast-in-place concrete. All work shall be in accordance with the contract documents:

MATERIALS

Formliner Panels: Shall be custom manufactured 100% pure urethane form liners mold bonded to ACX plywood. Urethane form liner thicknesses as required to obtain pattern indicated. Ensure support systems required to carry all loads while maintaining all finish requirements, alignment of joints and seams, thickness of materials, location of surface in space, true to line and plane, and designed to provide for leak-proof seams between panels.

Liner types shall be a “Varied Weave Pattern” with multiple modules as shown on Drawings.

- Formliner/facing modules shall be sized to minimize seams or joints in the finish surface and follow module variations as shown on Drawings.
- Mating edge surfaces of form liner shall be accurately formed and fabricated so that individual alignment of panels is accurate and remains tight resulting in monolithic appearance of finish surface.
- Anchors for fastening formliner/facing system to backup form shall be concealed, providing secure positive anchorage, use screw type fasteners of size and shape required to firmly anchor formliner to form system facing. Formliner shall be back-fastened to backup form system so that no fasteners appear in the finish concrete surface.
- Integrate plywood or other suitable reinforcing into formliners for anchorage, back-fastening, and proper support of formliner, to prevent distortion of surfaces under loads encountered preparing and placing concrete, and to maintain shape, size, and stability of formliner.
- Right angle edges of forms where surface to be exposed in finish concrete shall be without radius, arris or bevel, unless otherwise indicated in the Drawings. Fabricate flanges to provide accurate alignment between units, to provide uniform compressive pressure between forms, to prevent loss of fluid during concrete placement, and dimensional support for formliner.

Acceptable Form Liner Manufacturers:

- Architectural Polymers, Inc., 1220 Little Gap Road, Palmerton, PA 18071, PH: 610.824.3322, W: www.apformliner.com
- Scott System, 10777 E. 45th Avenue, Denver, CO 80239, PH: 303.373.2500, W: www.scottsystem.com
- Fitzgerald Formliners, 1500 East Chestnut Avenue, Santa Ana, CA 92701, PH: 714.245.9715, W: www.formliners.com

Or, an approved equal.

Smooth Surface Panels: Flat form surfaces shall be plastic coated material as follows:

- Panels shall be ¾" thick, in sizes to minimize joint lines and produce required straight, uniform, square edge, level seams, construction joints and edges.
- Pine plywood, minimum 7 plies per inch thickness. Panels shall be faced with a high-density plastic overlay (HDO).
- Birch plywood, minimum 14 plies per inch thickness, with heavy duty plastic overlay surface on both sides. Edges shall be sealed in manufacture.

All smooth surface formwork panels shall have sealed, square edges, and have square corners. Butted edges of panels, when multiple panels are assembled together, shall not vary more than 1/16 inch in 10 ft. in any butted joint.

Release Agents: For all formwork surfaces shall be colorless, non-staining and have no deleterious effects on the finished concrete, manufactured specifically for non-absorbent surfaces and for reducing surface voids. Formwork for custom formliners shall also be treated as directed by the custom form liner manufacturer. Form release material shall be on the NYSDOT's Approved List of Manufacturers and compatible with the formliner material.

Form Ties: Shall be manufactured specifically for use as concrete ties and shall be designed to seal tightly to the form face material without fluid loss. Ties shall be of sufficient strength to resist fluid concrete placing pressures and formwork elongation at the longest span of support used in the project. Ties shall be one of the following as approved by the Engineer:

- Fiberglass rod tie system with screw tie clamp grippers:
  - Gripper shall have a screw adjustable device between the rod gripper and the form contact surface. Rod size shall be minimum 3/8 in. and maximum 3/4 in. diameter as approved after use on the mockup.
- Cone/Tube/Rod or Cone/Coil/Rod tie system with screw tie clamps.
  - Cone size shall be maximum 1-1/2 in. diameter for coil spreader and 2 in. for tube spreader. Depth of cone shall be minimum 1-1/2 in.

All ties proposed for the work shall be used in the mockup structure for review and selection by the Engineer.

Joint Sealer: Seal formwork abutting edge conditions against fluid loss utilizing the following:

- Foam gaskets for sealing field erected corner form joints shall be highly compressible foam rubber or neoprene tape, paper backed, with pressure sensitive adhesive on one side, and shall be of sufficient width and thickness for specific use.
- Sealant for sealing permanent shop or bench fabricated unrevealed joints shall be non-staining, silicone caulking.

Large field joint gaps use aerosol applied expanding foam, type suitable for use intended. Use where form units abutting irregular materials and foam tape not sufficiently compressed or strong enough to stop fluid concrete leakage from formwork. Do not allow foam to expand into surface contact area of exposed concrete.

Patching Material: The patching material, technique, and match with adjacent surfaces shall be approved by the Engineer prior to any patching. Plastering and skim coating of surfaces will not be allowed.

CONSTRUCTION DETAILS

General: Responsibility for the design of architectural concrete textured finishes to be in conformance with requirements of the contract documents, and as approved by the Engineer. All work shall be performed using the highest standards of quality for visual and durable concrete and shall rest with the contractor.

Performance Criteria: The completed formed concrete surfaces shall match the color and texture of the approved sample panels. All textured finish work shall be performed so that no evidence of the following will be evident when the formwork is removed:

- Damage of any kind.
- Formwork fastening penetrations or formwork anchoring devices or projections other than approved embedded items.
- Out of alignment or incorrect profiles.
- Discoloration caused from form liner staining.
- If any of the above-mentioned deficiencies occur, the Engineer may order the affected concrete replaced or repaired with acceptable results. Repair only when directed by the Engineer. Corrected deficiencies must meet with the Engineer's approval. All remedial work shall be performed at a location approved by the Engineer and shall be submitted as tests prior to any repair work being accomplished.

Quality Assurance: The work of this section shall be performed by a concrete contractor who specializes in the type of finish work required for this project, with a minimum of five years documented successful experience and shall be performed by skilled workers thoroughly trained in the necessary trades to perform the work. Prior to commencing with the work, the contractor shall submit resumes, references, and photographs/locations of prior work examples of textured finish concrete surfaces for approval by the Engineer.

The concrete contractor shall assign a quality control person to oversee the architectural concrete textured finish work. The primary duty is to be responsible for the required execution of the work. The Concrete Quality Control Technician shall develop a check list for execution of the work and for sign off by the concrete superintendent and be submitted to the Engineer. The Quality Control Technician shall understand and be familiar with the requirements of this section.

After approval of products and samples and as early as possible, but not less than 30 days prior to the fabrication of the formwork, a pre-installation meeting shall be scheduled with the manufacturer's representative, contractor, and Engineer to discuss the materials, methods of forming, coordinating and quality control procedures involved in the Architectural Concrete Textured Finish work and the interface with related work.

The success of this Project depends greatly upon visual elements of construction that require review, selection and acceptance of samples and mockups at an early stage. Items of primary visual concern – concrete mix materials, urethane liner facing materials, concrete samples, and mockups shall be submitted as soon as possible. Verify list of priority items with the Engineer, notify Engineer of any impediments to providing priority samples.

Submittals: Do not proceed with the construction of the architectural concrete textured finish in the project, including fabrication of the formwork, until all samples, product data, mock-up and shop drawings have been approved by the Engineer. Contractor shall submit for approval:

1. Product Data / Qualifications for the materials specified herein, including but not limited to:
   - Custom urethane form liner manufacturer; liner tolerances, anchoring methods, backing requirements
   - Smooth surface panel
   - Form release agent
   - Form tie solution
   - Joint sealers
   - Concrete patching material

2. List – project names and locations of three similar past projects of the manufacturer and installer.
3. Item Samples – custom urethane form liner, joint seal material, and form ties.
4. Shop Drawings – plans, elevations, and sections to show detailed layout of all textured finish concrete work and interfacing adjacent concrete work, including the mockups. Show all flood walls and retaining walls. Include relevant liner panels, ties, depressions, openings, recesses, reveals, control joints, and construction joints. Shop drawings shall include detailed numbering and/or identification system used to positively identify urethane liner modules.
5. Construction Procedure Documents – develop and submit written procedures for the execution and sequencing of the work. These procedures shall be used by the contractor and incorporated into a Quality Control Checklist.

Sample Panels: Prepare formwork and cast concrete for sample walls as follows:

1. Cast up to six 4’ wide x 4’ high x 12” thick wall panels, with reinforcement replicating design wall reinforcing, and specified weave pattern indicated on Drawings. Each tombstone showing different liner module on one entire face. Each tombstone to show panel seams and reveals, cast vertically to test proposed design mix, and formwork facing materials.
2. Cast two (2) – 4’ wide x 4’ high x 12” thick smooth surface wall panels, with reinforcement replicating design wall reinforcing and each type of wall tie proposed. Show sample facing panel seams, cast vertically to test proposed design mix, formwork facing materials and tie recesses.
3. Cast panels simulating techniques to be used in production to reduce surface area voids and achieve the specified criteria. Forms shall be constructed with fluid tight square corner seams.
4. Adjust mixes and placing techniques as required between each panel to achieve the best placing technique for the mix. Submit as required to obtain approval of Engineer.
5. Apply water repellent sealer to half of finish surface of each tombstone.
6. Apply anti-graffiti treatment over half of water repellant finish treatment following manufacturer’s written instructions.

Mock-up for Formed Concrete Work: After all samples, product data, and the shop drawings for the Mock-up are approved, construct mock-ups of the architectural concrete textured finish work in a location approved by the Engineer and as described below. Mock-ups and mock-up submissions for the concrete work shall consist of the following:

- Mock-ups shall be as detailed.
- Prepare and submit a “Lessons Learned” report after completion of each mock-up for review and discussion with the Project Team.
- Additional mock-ups or partial mock-ups shall be required if the above mock-ups are deficient in producing the quality required for the project.

1. Mock-ups shall consist of the following**:**

    - Foundation of a size and reinforcement adequate to support the work at the designated location.

        - Scope of Visual Mock-up**:** Bridge abutment and flood wall section using form liner weave ribbon pattern: “J” shaped in plan, 10 feet high and 12” thick, show radius abutment and 24-foot-long straight section with transition from A to B to C panel types, form liner seams, and typical joints in the project.

            - Mock-up shall be placed in a minimum of two placements.
            - One vertical construction joint in wall.
            - Include any embeds as they would be required for wall construction and cast-in elevation markings as shown on Drawings.
            - Include typical wall elevation step and radii bulk heads with dimensions as shown on the Drawing’s.
            - Apply 717-03 - Penetrating Type Protective Sealer (ITEM 559.16960118) to one half of the mockup according the manufacturer’s instructions.
            - Apply anti-graffiti protection coating (ITEM 559.90010011) over Penetrating Type Protective Sealer according to manufacturer’s instruction in an area approved by Engineer.

    - Reinforce as in a similar detail on the drawings and add necessary reinforcing and/or supports to maintain stability.
    - Use approved form facing materials, reinforcement and accessories and assemble formwork using methods as intended for construction and to achieve the specified requirements.
    - Place concrete with methods to be used in construction, including anticipated time delays between placements. Place concrete to achieve the specified requirements.
    - Finish exposed hardened surfaces of the walls with specified finish treatments when directed by the Engineer.
    - Use approved concrete design mixes, inclusive of specified admixtures, for the mock-ups as will be used in the construction of the formed surfaces.

If mock-ups do not meet the specified quality and are not approved, remove and replace in full or in part at no additional cost. Mock-ups shall be located so they will remain throughout construction. Protect mock-up from damage. Remove mock-up only when directed by the Engineer.

Formwork:

General Requirements: Use only form units that are in like new condition and replace panels with defects with new panels. Use screw type fastening and clamping devices to maintain alignment, and to tightly close joints at corners, end forms, and at bulkheads. Apply pressure at joint to resist concrete placing pressure as close to the joint as possible. Vertical and horizontal construction joints shall be at locations approved by the Engineer and before the erection of formwork begins and shall be formed so the joint is straight, in plane and flush with the adjacent surface. Construction joints shall be at a panel joint seam and shall not interrupt the pattern of the formliner. Gaskets shall be installed in formwork corner joints and bulkheads assembled and disassembled in field. Place the gasket within the form joint. Install gasket away from contact edge 1/16 in. to 1/8 in.. Clean all formwork contact surfaces prior to use. Take care in cleaning to not damage

the surface. Prior to first use, all urethane liners shall be cleaned per manufacturer's recommendations.

Fabrication: Design formwork to permit easy removal. Prying against the concrete will not be permitted. Care shall be taken so as not to damage the finished concrete surface in cutting or removal of the forms. The forms shall be completely rigid and strong enough to withstand without deflection or elongation, movement or fluid loss at the high hydraulic pressures that result from the rapid filling and vibration required for architectural concrete placing. Forms shall be fabricated so the concrete can be adequately placed, vibrated and finished to achieve the specified finishes.

Layout form ties, form joints, reveals and exposed embedments as shown on the Drawings.

- Ties: Locate ties to fall at centers of individual weaves in the textured concrete. No ties shall fall on weave edge or liner butting seams.
- Embedments: Numbers, wayfinding signage, and similar items are to be cast as part of the architectural concrete textured finish as shown on the Contract Drawings. Coordinate as required. Securely and accurately locate and anchor embedment's with correct orientation. Anchor using screw type fasteners to provide compression connection to prevent loss of concrete fluid or movement of embedment. Seal or gasket at interface with urethane formliner.

Smooth surfaces shall be square and flat. Protect all cut edges to avoid swelling. Install joint sealer in all fabricated butt joints of smooth surface panels to prevent fluid loss. At butting plywood panel edges place a bead of sealant 1/8" max at back edge (away from contact face) of one panel prior to butting interface edge surfaces. Take care not to allow sealant to come in contact with form surface.

Prior to use, all form surfaces shall be coated with form release agent. Only manufacturer recommended and NYSDOT approved form release agents shall be utilized. Release agents shall be applied in strict accordance with release agent manufacturer recommendations. Hand-charged sprayers will only be allowed if a thin uniform coating of release agent is obtained on the form.

Wherever forms are to be refurbished and reused adjacent to or in combination with new forms or forms in like-new condition, locate the older forms so that any variation in texture or finish that might appear will be inconspicuous. Locate transition only at corners or other changes of plane.

Transitions between adjacent planes of surfaces shall be without the use of chamfers or radiused forms, unless otherwise specifically shown on the Architectural Drawings.

Formwork Erection Tolerances: Fabricate and position formwork surfaces to maintain hardened concrete finish lines within the following allowable variations:

- From designed edge elevation in 10 ft: +/- ¼"
- From designed vertical plane in 10 ft: +/- ¼"
- Cross-sectional dimensions: +/- ¼"
- In-place concrete finish surface to new formed finish surface: +/- ¼"
- Liner form surface to surface at butt joint: Maximum variation of urethane liner thickness – Fabricate so that liner plywood backing is tight to back-up form system.
- It is the intent of this specification that the formwork will be erected in such a manner that lines and surfaces are visually presentable without obvious defects. Where lines and planes require adjusting from one placement to another, adjust the forms to realign in a visually acceptable manner.

Finishes and Patching: All exposed work shall be finished with the approved finishes determined from sample tests executed in the mock-ups. Finishes shall be as specified herein where indicated on the drawings. Minor defects may require fins to be removed (i.e. top edges) or minor patching performed, however, it is the intent of this specification that the work will be performed in such a manner that only the cleaning treatments and sealer/anti-graffiti applications will be required after stripping.

Prior to treating, all surfaces shall receive the following preparation and cleanup: All surfaces to receive treatment shall be a minimum of 21 days old, or as recommended by the manufacturer. All surfaces can be treated at end of project.

- Remove all stains using an appropriate non-abrasive stain remover for each type.
- Protect all adjacent work during operations. At completion of day's work leave area clean. At completion of work, remove all equipment, waste and excess material and leave area clean.
- All treatments shall be applied to the mock-up surfaces as directed by the Engineer. Finish treatments shall be applied to the building concrete surfaces only when and as directed by the Engineer.

Treat the formed concrete surfaces with cleaning applications as determined from tests on the mock-ups:

- "Non-acid" Treatment for concrete surfaces: After stripping, the surface shall be treated for stain removal and cleaning when directed by the Engineer.

Sealer treatment for all architectural concrete surfaces: Treat all exposed vertical wall surfaces with NYSDOT approved 717-03 – Penetrating Type Protective Sealer per the manufacturers written instruction.

- All surfaces receiving treatment shall be dry.
- All surfaces receiving treatment shall be clean and free of stains and laitance.
- Any curing agents used to be completely dissipated prior to application of sealer so that sealer will be absorbed into the concrete. Test sealer in small area in inconspicuous location to determine if concrete curing material has sufficiently dissipated for proper application of sealer.

Formed Square Corner Edge Treatment: After concrete is hard use a fine masons stone or fine grit sanding block on the edge to achieve an eased edge with a 1/16-inch radius. Take care not to damage the adjacent surface. This applies to two adjacent vertically formed corner surfaces and to a formed surface adjacent to a trowel finished top surface. This treatment to be done only to edges as directed by the Engineer.

Tie Hole Treatment: Finish holes for approved ties as follows:

- At cone tie holes, plug the hole with either a field cast plug using same concrete as used in the wall, or by the following method. All tie hole treatments as determined on the mock-up.
  - Fill the hole void with a color matching mortar and tool the hole to recess the mortar surface in the hole, depth as directed by the Engineer. Take care not to allow mortar to be in contact with the finished wall surfaces.

- Fill the cone hole by tamping in the mortar to a dense filling and finish with a dowel type tool with limiting collar to the recess required. Smooth the recessed mortar. After finishing remove excess mortar on tape and remove the tape.
- Where through-the-wall-tie holes occur, plug the holes with backer rod material and leave 2-inch void at end. Fill void with patching mortar as indicated above

Patching: Only areas designated by the Engineer shall be patched. Where minor patching is required, as approved by the Engineer as a means of rendering the surface acceptable, it shall consist of patching with a texture matching technique and color matching mortar mix. Test patches shall be placed on the mock-up or other approved surface and be approved by the Engineer prior to commencing any patching of the work.

Apply all treatments in a manner that conforms to applicable environmental regulations. Provide protective materials, neutralizing materials, and supports to guide any run-off, overspray, or application to a collection point for proper removal. Protect adjacent water and ground surfaces from contamination from any deleterious substances, contaminants, liquids or powders. Render any spills benign; remove from site and dispose of in environmentally friendly manner.

Protection: Protect all Architectural Concrete Textured Surfaces from damage of any kind. Pay special attention to surfaces near work of other trades. All surfaces shall be free of damage at time of acceptance. Allowing damage and patching or cleaning at end of project is not acceptable. Locate material staging areas where operations will not damage textured surfaces. Protection shall assure protection from paint, oils, rust, stains, impact, or any other kind.

MEASUREMENT AND PAYMENT:

The quantity of Architectural Concrete Textured Finishes to be paid for under this item shall be the number of SQUARE FEET constructed in accordance with the plans and specifications and as directed by the Engineer.

Item No.	Item	Pay Unit
ESCR 13.BRDG	Architectural Concrete Textured Finishes (Pedestrian Bridges)	SF
ESCR 13.FLWL	Architectural Concrete Textured Finishes (Floodwalls)	SF
ESCR 13.BLDG	Architectural Concrete Textured Finishes (Buildings	SF

END OF SECTION

SECTION ESCR-60.29 – CATHODIC PROTECTION FOR PILES

60.29.1 INTENT.

This section describes the sacrificial cathodic protection system for the existing steel pipe piles supporting the esplanade and the proposed cut-off wall and integrated floodwall/cut-off wall.

60.29.2 DESCRIPTION.

Cathodic protection, under this section, shall refer to all anodes and associated appurtenances needed for the installation of a functioning sacrificial cathodic protection for the proposed integrated floodwall/cut-off wall, cut-off wall, and the existing pipe piles supporting the esplanade.

60.29.3 MATERIALS.

(A) Anodes: Aluminum

Chemical composition shall be as follows:

- Zinc 2.5 to 5.75 percent
- Indium 0.015 to 0.040 percent
- Silicon 0.12 percent maximum
- Copper 0.003 percent maximum
- Iron 0.09 percent maximum
- Cadmium 0.002 percent maximum
- Lead 0 maximum
- Aluminum Remainder

The current output and capacity of the alloy are dependent on the alloy's galvanic properties, the anode/core size and geometric shape. Therefore, the anode supplied shall not deviate in any geometric dimension by more than 10 percent and shall have the following galvanic properties in sea water:

- Closed Circuit Potential 1,050 mv (Ag/AgCl ref.)
- Efficiency Min. 85 percent
- Current Capacity Min. 1,150 amp-hrs/lb

Workmanship shall be in accordance with MIL-A-24779.

(B) Anode core and bonding straps shall be as indicated on Contract Drawings

(C) Steel material shall be in accordance with ASTM A36. Surface preparation shall be in accordance with MIL-A-24779.

(D) WELDS FOR UNDERWATER WELDING

The wet weld electrode shall be high deposition, all position, Class E7014 AWS A5.1 designed for wet weld conditions. The weld metal typical properties shall be as follows:

Wet Metal	Chemistry (%)
• C	0.06
• Mn	0.54
• Si	0.35
• P	0.026
• S	0.013

Mechanical Properties

• Ultimate Tensile Strength	74,600 psi
• 0.2 % Offset Yield Strength	68,400 psi
• Elongation in 2”	7.3%

60.29.4 SUBMITTALS

(A) GENERAL CERTIFICATES

Qualifications of Corrosion Engineer.

Qualifications of Underwater Welders.

(B) SHOP DRAWINGS

Anode dimensional drawing.

(C) ANODE MANUFACTURER’S QUALITY CERTIFICATES AND REPORTS

Manufacturer shall submit all the following documents/certificates for anode approval.

Each delivery will be completed with the following certificates:

a. Certificate of Conformity and Identification

b. Material chemical analysis reports for 5% of all anodes

c. Visual inspection of cracks, imperfections reports for all anodes

d. Dimension inspection reports for 10% of all anodes

e. Weight list anode production reports for 10% of all anodes

Visual inspection of cracks – 100% of total quantity.

Random chemical analysis must be performed according to NACE RP0387. Provide weight test and dimensional inspection for two (2) samples of each batch / heat.

The anodes shall not be approved by the Engineer unless all quality control documents/certificates are obtained by the Engineer in an orderly manner prior to delivery, as previously noted.

(D) OPERATION AND MAINTENANCE DATA

Cathodic Protection System (test reports, shop drawings, test/inspection schedule). Reports must include details of all test equipment used and its calibration.

(E) CLOSEOUT SUBMITTALS

Initial Cathodic Protection System Field Test Report;

One Year Warranty Period Cathodic Protection System Field Test Report;

Final Cathodic Protection System Field Test Report;

60.29.5 METHODS.

(A) SAFETY

Personnel shall be protected in accordance with 29 CFR 1910.

(B) QUALIFICATIONS

Service of Corrosion Engineer: The Contractor shall obtain the services of a Corrosion Engineer to supervise, inspect and test the installation of the cathodic protection system. Corrosion Engineer refers to a registered professional engineer with certification, licensing or other documented education or experience in the field of cathodic protection for marine structures. Minimum documented experience shall be five years specifically in this field. Alternately, the services of a person accredited or certified by the NACE International at the level of Corrosion Specialist or Cathodic Protection Specialist shall be obtained with a minimum of five years of documented experience in the field of cathodic protection for marine structures. The Contractor shall submit evidence of the qualifications of corrosion engineer to the Engineer for review and approval.

(C) DELIVERY, STORAGE AND HANDLING

Only acceptable materials will be permitted on-site. Deliver products to site with each anode identified and complete with factory documentation. Each delivery shall be completed with the Anode Factory Quality Control Test Certificate and Reports for verification by the Engineer.

Store products in a dry location as directed by the Engineer and protect products from physical or corrosive damage or vandalism.

(D) ANODES MOUNTED TO PILES

Entire operation shall be performed underwater. After pile installation and prior to welding, remove coating, mill scale and any other contaminants and clean to bare metal. Attach anodes onto piling at the elevations indicated by underwater welding steel anode straps to face of pile. After welding, re-coat straps and pile to match the quality of the adjacent surfaces with two-part epoxy splash guard compound manufactured for underwater application. All underwater welding shall be performed in accordance with requirements above.

(E) BONDING

Above water: Clean the steel structure surface by scraping, filing or wire brushing to produce a clean, bright surface. Weld steel bar to pile surface as shown. The weld shall be cleaned to bright metal and coated with a durable waterproof compound such as a two-part coal tar epoxy.

Underwater: Clean the steel structure surface by scraping, filing or wire brushing to produce a clean, bright surface. Weld steel bar to pile surface as shown. After welding, re-coat straps and pile to match the quality of the adjacent surfaces with two-part epoxy splash guard compound manufactured for underwater application.

All underwater welding shall be performed in accordance with requirements shown above.

(F) ENGINEER TESTING AND THIRD-PARTY TESTING FACILITY

All welds shall be subject to visual examination during production by Engineer. The Engineer reserves the right to visually examine the welds prior to coating touch-up. The Contractor shall provide assistance, as required, to the Engineer's inspector. In addition to this, the Engineer reserves the right to carry out additional independent non-destructive testing, at the City's expense.

60.29.6 FIELD QUALITY CONTROL

Field tests may be witnessed by the Engineer. Notify the Engineer 5 days prior to performing each field test.

(A) FIELD TESTING

The systems shall be tested and inspected by the Contractor's Corrosion Engineer in the presence of the Engineer. Record test data, including date, time, and locations of testing. A plan drawing must accompany the data and a logical system must be used to identify the corresponding points on the plan. Submit to the Engineer as a formal, bound Test Report. Contractor shall correct and retest, at own expense, deficiencies in the materials and installation observed by these tests and inspections. Testing shall include the following measurements:

Native Potential Measurements

After bulkhead piles have been installed and before placement of anodes on new bulkhead piles and existing pipe piles measure potentials on piles using a hand-held buffered, Silver-Silver Chloride (Ag-AgCl/0.5M KCl) reference electrode. The locations of these measurements shall be at the mud line, at the waterline and at the mid-point between these. In all cases, the measurement shall be taken approximately 4-inches from the pile surface, for pipe piles on the side opposite from where the anode will be mounted, for bulkhead piles in between anode positions. Bulkhead piling shall be measured at ends, corners and approximately every 25 feet thereafter at the above elevations. Measurements shall be recorded with pile numbers or stationing. These locations shall be used again for the next testing procedure (see below: Protected Structure Potential Measurements).

Protected Structure Potential Measurements

With the entire galvanic protection system operating for at least one month but no more than three months, measure potentials on piles as described above. In all cases, the measurement shall be taken approximately 4-inches from the pile surface, for pipe piles on the side of the pile opposite from the anode, for bulkhead piles at each end, corners and approximately every 25 feet thereafter at the above elevations.

(B) CRITERIA FOR CATHODIC PROTECTION

Criteria for determining the adequacy of protection shall be a negative voltage of at least 0.80 volt (ref. to Ag/AgCl) as measured between the structure surface and a reference electrode contacting the sea.

60.29.7 ONE YEAR WARRANTY

(A) The Contractor shall inspect, test, and adjust the cathodic protection system for one year after the initial inspection and must test the system to ensure its continued conformance with the inspections outlined above. Copies of test data, including the final test at the end of the one year period, must be certified by the Contractor's corrosion engineer and submitted to the Engineer.

60.29.8 DEMONSTRATION

(A) FINAL SYSTEM TEST REPORT

Upon completion of testing of the one year performance period and prior to its acceptance by the Engineer, submit a final system testing report and an operation and maintenance manual for the cathodic protection systems installed, in accordance with Project Record Documents paragraph of this Section.

The testing report shall include as a minimum the following:

1. Native potential tests
2. Protected potential tests (including the initial test, performed one to three months after installation and the Final test, performed one year later)
3. Method of recording test point locations for repeatability in subsequent tests.
4. Statement of protected condition based on potential test results
5. Statement of protected condition based upon change in voltage from native potential to protected potential.

(B) INSTRUCTING FACILITY PERSONNEL

At a time designated by the Engineer, make available the services of a technician regularly employed or authorized by the manufacturer of the Cathodic Protection System for instructing Facility personnel in the proper maintenance and measurement techniques for the Cathodic Protection System. The period of instruction shall be not less than 4-hours. Conduct the training at the jobsite or at another location directed by the City. The instructions shall include a visual presentation and discussion of the anodes and bonding which makes up the CP system, and shall cover the topics of testing, measurement and inspection.

60.29.9 OPERATIONS AND MAINTENANCE MANUAL

(A) The O&M manual shall consist of the following items provided in an electronic folder and in a hard-copy binder (provide 2 copies):

1. CP system drawings and as-builts.
2. Shop drawing submittals of the anodes used in the CP system.
3. Test reports of the Native and Protected tests.
4. Schedule or frequency of future tests and inspections (generally performed along with routine structural inspections).
5. Description of potential testing and inspection methods and procedures.
6. A statement requiring that a visual inspection be performed to obtain accurate dimensions of remaining anode material, used to determine depletion rate and

remaining service life. The quantity of selected indicative anodes to be measured shall be 5%, but should be changed based on similar or varied depletion rates observed.

60.29.10 MEASUREMENT.

The quantity of anodes to be measured for payment shall be the number of discrete anodes installed that have been installed to the satisfaction of the Engineer. No payment or allowance will be made for damaged or non-functioning anodes.

60.29.11 PRICE TO COVER.

The contract unit price shall cover the cost of all labor, materials, plant, equipment, insurance, samples, and incidentals required to furnish and install functioning anodes, complete, in full compliance with the requirements of the specifications. The unit price shall also include the cost of installing bonding bars, cables, connection tabs, any excavation that might be required to facilitate installation of the anodes, surface preparation, and any remedial actions that may be needed to have a fully functional cathodic protection system.

Payment will be made under:

Item No.	Item	Pay Unit
ESCR-60.29	INSTALLATION OF ANODE	E.A.

END OF SECTION

SECTION ESCR-61 – WILLIAMSBURG BRIDGE SECURITY FEATURES

61.01 DESCRIPTION.

The Williamsburg Bridge footings within East River Park shall be protected by a fixed and retractable bollard system, as well as a concrete security wall system, as shown on the Contract Drawings and specified herein.

61.02 MATERIALS.

(A) MANUALLY RETRACTABLE BOLLARD SYSTEM

The total bollard height when in the raised position shall be no less than 36 inches above the roadway surface and shall have an outside diameter of no less than 12 inches. The retractable bollard system shall satisfy ASTM F2656 Class M50/P1.

The manual bollard shall be capable of being raised and lowered by manual means such as levers, manual handle and driving shaft or battery charged portable motor unit drive. Hydraulic, pneumatic or electric powered bollard systems are not permitted.

The manually retractable bollard system shall be HARD POST MP-354A/ST-950(SS), modified with security features at top of bollard with internal locking mechanism. Bollards shall be manufactured by US Koei Technologies, Inc. In addition, all manually retractable bollards shall have a polished finish which shall be applied during the bollard manufacturing process. Casing pipe and retractable pipe must be high-carbon steel with Kanigen plating. Top cover and screws must stainless steel.

For the retractable bollards, the system must be secured by an anti-tamper locking mechanism encasing the locking pin complying with New York City Fire Code Chapter 5, Section FC 506 for “Keys and Key Access” and provide FDNY standard “1620” compliant keys. Lock must not be case hardened. Means and methods for bollard lifting mechanism and removal procedures shall be submitted for approval by the Engineer prior to installation.

(B) FIXED BOLLARD SYSTEM

The fixed bollard system shall meet the following material requirements:

1. Steel pipe shall be ASTM A53, Grade B, Fy = 36 ksi; Schedule 140 (1" wall thickness) or Schedule 80 (0.5" wall thickness with 1” x 83” plate)
2. Steel plate shall be ASTM A36, Fy = 36 ksi

(C) CONCRETE

Concrete for the fixed and retractable bollard foundations must be 5000 psi concrete.

Concrete for the security wall system must conform to the Flood Protection System features class of concrete per Section ESCR-4.06.

All steel reinforcing must conform to Section ESCR-4.14.

(D) WELDING

Welding shall be in accordance with AWS D1.1/D1.1M.

(E) FINISHING

For retractable bollards, the retractable pipe shall include brushed hard chrome finish. Stainless steel top cover shall have a brushed finish.

All exposed surfaces of the fixed steel bollards shall be thoroughly cleaned of all rust, oil, grease, scale, or foreign matter and painted with one (1) shop coat of Primer. All steel surfaces which will be exposed to view after installation shall be given one (1) shop coat of Intermediate and one (1) shop coat of Finish topcoat. The color of the Finish paint shall be black, as approved by the Engineer. All paints shall be applied in compliance with the paint manufacture's data sheets. All components of paint shall be compatible and supplied by a single manufacturer.

Approved paint types and manufacturers must be as listed in NYSDOT Approved List 708-01.

61.03 SUBMITTALS.

(A) SHOP DRAWINGS

Detail drawings containing complete schematic diagrams, and any other details required to demonstrate that the system has been coordinated and will properly function as a unit. Drawings shall show proposed layout and anchorage of equipment and appurtenances, and equipment relationship to other parts of the work including foundation and clearances for maintenance and operation. The Contractor shall submit shop drawings no later than four (4) months prior to the scheduled completion of the project. The Contractor shall submit the following information as required by the Engineer: materials, finishes, supports, hardware, fasteners, fittings, and accessories. Shop drawings to show relations to adjacent work, location of concrete footings, and reinforcement information. All drawings shall show English units. Metric units can be shown in addition to English units.

(B) PRODUCT DATA

Submit a complete list of equipment, materials, including industrial standards used and how they apply to the applicable component and manufacturer's descriptive data and technical literature, catalog cuts, and installation instructions. Submit list of product installations comparable to the subject job as reference. Include date of product installation, installer, and owner's name and location of the project. All engineering calculations, standard and deviations, must be submitted to the Engineer for approval.

Color and finish samples for each bollard system shall be provided to the Engineer.

(C) SPECIALTY TOOLS AND OPERATING EQUIPMENT DATA

Specialty tools and operating equipment required for the operation of the barrier, after approval of the shop drawings. The data shall include a complete list of parts and supplies, with current unit prices and source of supply.

(D) TEST REPORTS

Test reports in booklet form showing all field tests, including component adjustments and demonstration of compliance with the specified performance

criteria, upon completion and testing of the installed system. Each test report shall indicate the final position of controls. The Contractor must submit a concrete mix design report per the requirements of Section ESCR-4.06.

(E) OPERATION AND MAINTENANCE DATA

Operation manuals shall outline the step-by-step procedures required for system startup, operation, and shutdown. The manuals shall include the manufacturer's name, model number, service manual, parts list, and brief description of all equipment and their basic operating features. Maintenance manuals shall include routine maintenance procedures, possible breakdowns and repairs, and troubleshooting guide.

Submit one complete set prior to performance testing and the remainder upon acceptance. Manuals shall be approved prior to acceptance. Submit manufacturer’s completed warranty registration form to the Engineer. Provide a warranty against all defects in materials or workmanship for five (5) years after the date of installation. Defective materials shall be replaced by manufacturer at no additional cost to the City. Defective materials may be replaced with new or reconditioned materials furnished by the manufacturer, at the manufacturer’s discretion.

A minimum of six copies of the operation and maintenance manuals shall be provided a minimum of 2 weeks prior to field training.

61.04 METHODS.

(A) DELIVERY AND STORAGE

Components placed in storage shall be protected from the weather, humidity, and temperature variation, dirt and dust, or other contaminants. Structural materials shall be stored on sleepers or pallets and shall be protected from rust and objectionable materials such as dirt, grease, or oil.

(B) SPECIALTY TOOLS AND OPERATING EQUIPMENT

The barrier manufacturer's standard recommended specialty tools and operating equipment package, with current unit prices and source of supply complete with detailed manuals on parts replacement, shall be provided with each barrier to facilitate 1 year of normal operation. Particular consideration shall be given to system components which are not readily available from local or commercial sources and which are critical to the operation of the system.

The following specialty tools and operating equipment shall be furnished to NYCDOT as part of the barrier installation.

Qty	Item
75	Keys to Master Lock 6121KALJ Stamped WBP1 to WBP75 (to be kept under lock & key)
2	Easy Rider Devices with Four (4) Spare batteries
14	Crank Handles for Retractable Bollards
19	Penta Plus Keys
36	Penta Plus Screws
9	Special Pin-Torx Allen Keys (to be kept under lock & Key)
30	Special Pin-Torx Screws

9	Special Rex Keys
30	Special Rex Bolts
30	Silicone Grease Tubes
30	Dust Seals
60	Cover Plate Screws
2	As built drawings on CD

(C) MANUFACTURER'S SERVICES

Services of a manufacturer's representative who is experienced in the installation, adjustment, and operation of the equipment supplied shall be available. The representative shall supervise the installation, adjustment, and testing of the equipment. For security bollards, manufacturer to have a minimum of 5 years with documented field experience with similar vehicle barriers.

Provide a warranty against all defects in materials or workmanship for five (5) years after the date of installation. Defective materials shall be replaced at manufacturer’s discretion with new or reconditioned materials furnished by the manufacturer, at no cost to the owner.

(D) INSTALLATION

Installation shall be in accordance with manufacturer’s instructions and in the presence of a representative of the manufacturer. Manufacturer's representative shall be experienced in the installation, adjustment, and operation of the equipment provided. The installer must have a minimum of three (3) years’ experience installing similar equipment. The representative shall also be present during adjustment and testing of the equipment.

The posts for the bollards shall be set in concrete footings as shown on the plans or as directed by the Engineer. The sleeves for removable bollards shall be set in concrete footings, as shown on the plans or as directed by the Engineer.

All posts and sleeves shall be set plumb and true to line and grade. Any post and sleeve not set true to line and grade shall be removed and replaced at the Contractor's expense. Bending posts to make them plumb will not be permitted.

(E) DRAINAGE

An automatic self-drain system shall be provided in each bollard system as shown in the Contract Drawings that requires no hookups between the storm drains and the bollard system.

(F) FIELD TESTING

Upon completion of construction, a field test shall be performed for each vehicle barrier. The test shall include raising and lowering the barrier through its complete range of operation. The Engineer shall be notified at least 7 days prior to the beginning of the field test. The Contractor shall furnish all equipment and make all necessary corrections and adjustments prior to tests witnessed by the Engineer. Any conditions that interfere with the proper operation of the barrier disclosed by the test shall be corrected at no additional cost to the City.

Adjustments and repairs shall be done by the Contractor under the direction of the Engineer. After adjustments are made to assure correct functioning of components, applicable tests shall be completed.

(G) FIELD TRAINING

A field training course shall be provided for designated operating staff members. Training shall be provided for a total period of not less than 8 hours of normal working time and shall start after the system is functionally complete but prior to final acceptance tests. Field training shall cover all of the items contained in the operating and maintenance instructions.

61.05 MEASUREMENT.

The quantity of fixed and retractable bollards to be measured for payment shall be the number of bollards, including all coatings, foundations, drainage systems, and incidentals as shown on the Contract Drawings installed to the satisfaction of the Engineer. No payment or allowance will be made for additional bollards placed beyond the limits specified.

The measured volume of concrete for the security wall system shall be the Cubic Yards of concrete, including all incidentals as shown on the Contract Drawings installed to the satisfaction of the Engineer.

61.06 PRICE TO COVER.

The contract unit price for the fixed and retractable shall cover the cost of all labor, materials, plant, equipment, insurance, samples, and incidentals required to furnish, install, test, and train in full compliance with the requirements of the specifications.

The contract price per cubic yard for the concrete security wall, measured in place, shall cover the cost of all labor, materials, equipment, insurance, and incidentals required to furnish and construct the concrete structure complete in full compliance with the requirements of the specifications and as shown on the drawings, inclusive of steel reinforcement, and to furnish such samples for testing and to provide such testing equipment, laboratory space and facilities as may be required. All joints, waterstops, and sealants shall be included in the contract price.

Payment will be made under:

Item No.	Item	Pay Unit
ESCR-61F	FIXED BOLLARD	E.A.
ESCR-61R	RETRACTABLE BOLLARD	E.A.
ESCR-61CW	CONCRETE SECURITY WALL	C.Y.

END OF SECTION

SECTION ESCR-76.11 – CONSTRUCTION REPORT

76.11.1 INTENT.

The intent of this section is to prepare preconstruction reports for work to be performed under the contract to ensure that the Contractor's proposed means and methods of construction do not create or aggravate any potentially dangerous conditions. In order to ascertain the effects of construction on structures, the Contractor will be required to retain the services of a qualified firm with experience in structural engineering, soil mechanics, foundations, installation of piles, evaluation of the effect of construction on buildings and structures, effects of tunneling operations and tunneling shaft construction on buildings and structures, effects of dewatering and the associated movement of soil due to dewatering and the effect of vibrations upon structures. All construction work (bulkhead, floodwalls, ground improvement, roadway, sidewalk, curb, sewer, water main, regrading etc.) is subject to the preconstruction report.

76.11.2 SPECIAL EXPERIENCE REQUIREMENTS.

The Contractor shall submit to the Engineer qualifications of the firm it proposes to provide the engineering services described in this section. The proposed firm must meet the following special experience requirements.

(1) Such firm must, within the last three (3) consecutive years, have successfully provided engineering services similar to the services described in this section on a minimum of two (2) comparable projects.

(2) Such firm must carry professional liability insurance as specified in Schedule "A".

Compliance with such special experience requirements will be determined solely by the Engineer. Once a firm is approved, no substitution will be permitted, unless the Engineer has approved the qualifications of the proposed replacement in writing in advance. If the qualifications of the proposed firm are not acceptable, the Contractor shall submit the qualifications of another proposed firm within fifteen (15) days of notice to do so.

76.11.3 SUBMISSION OF PRECONSTRUCTION REPORT.

Upon approval and prior to construction the chosen firm (hereinafter referred to as the firm) shall submit six (6) copies of report(s) incorporating their findings and recommendations. The report(s) shall be prepared by or under the immediate direction of a New York State Licensed Professional Engineer as evidenced by the imprint of the Professional Engineer's seal and signature on the document. The report(s) shall include but not be limited to the following:

(A) A detailed description of the Contractor's proposed means and methods of construction including the installation of the bulkhead sheeting system, floodwalls, pile system, ground improvement, utilities, and dewatering system.

(B) An inspection of the interior and exterior (including photographs and digital audio-visual recordings as required) of all building, tunnel, and/or structures that may be affected by the proposed means and methods of construction and dewatering.

(C) A definition of the "radius of influence" that the proposed dewatering, bulkhead and floodwall installation, pile installation, ground improvement, and other construction activity that will impart on the surrounding soil.

(D) A definition of the limits of horizontal and vertical movement, including tilting, each building and/or structure within the "radius of influence" can tolerate without

damage to the structural integrity of that building and/or structure, should these values be different than those provided for critical structures in Section ESCR-76.21; however, these limits shall be subject to the approval of the Engineer, and shall not exceed twice the limits provided for critical structures. Movements which shall be considered include, but are not limited to, vibration-related settlements, differential settlements, settlements from dewatering, and building movement and/or rotation (tilting) due to excavation or construction-related work.

(E) A complete study of the vibrations that each building/structure can tolerate along with the anticipated vibrations promulgated by the means and methods of construction, taking into account the age and condition of the buildings.

(F) A statement that the limits of movement and vibrations, including tilt at some critical structures, specifically the Williamsburg Bridge foundation and the MTA L-Train tunnel, as defined in (D) and (E) above will not be exceeded as a result of the proposed means and methods of construction, as well as means and methods the Contractor, at the Contractor's own expense, will employ should any limits be exceeded. Limits of movement and vibrations, including tilting of critical structures, shall be proposed by the Contractor and the firm hired by the Contractor, should those values be different than those provided for critical structures in Section ESCR-76.21, but not exceed twice the values for critical structures; however, these limits shall be subject to the approval of the Engineer.

(G) A geological profile of the soils in the area. This profile shall be based upon the boring logs taken for this project. The Contractor, at own discretion, may make additional borings to supplement the boring logs taken for the project. Supplemental borings made by the Contractor shall be at no additional cost to the City, the cost for these borings shall be deemed included in the price bid for the various items under Section ESCR-76.11CR - CONSTRUCTION REPORT.

(H) A geotechnical data summary including assumed values for the physical and strength characteristics of the soils shown on the Record(s) of Borings, developed from, but not limited to available soil and/or rock descriptions, blow counts, and available geotechnical laboratory testing. Such physical and strength characteristics include, but are not limited to, a soil's unit weight, friction angle, cohesion, consolidation properties, and permeability/drainage properties.

(I) Engineering computations to substantiate any values stated, recommended, or defined in (C), (D) and (E), using the appropriate data from (G) and (H).

The report(s) shall include all field notes, measurements and photographs and digital audio-visual recordings, as required, of existing conditions which may be aggravated by the proposed construction work and shall include a visual inspection of the interior and exterior of all buildings and structures within the radius of influence of construction activity and dewatering. A view of each exterior face of the building and/or structure is required. Additional interior photographs shall be taken to show any existing cosmetic or structural damage on buildings and tunnels.

Applications for consents to enter buildings and/or structures for the purpose of inspection shall state that the inspection is necessary to ensure the structural integrity of the building. One counterpart of each consent, duly signed and acknowledged by the owner or one of the owners, executors or administrators for the owner and for the owner's agents, lessee and any other persons who shall have a vested or contingent interest in the building, or notice of refusal if consent is not

obtained shall be filed with the Engineer at least ten (10) days before the commencement of work which affect the building or structure.

The report shall also include recommendations or comments regarding any potentially dangerous and/or unsafe conditions uncovered along with all other additional information required pursuant to other sections of the specifications.

All results of the building or structure examinations shall be incorporated into the preconstruction report.

No work may begin until the Department of Design and Construction has accepted the preconstruction report. This pertains to all contract work and no exceptions will be allowed unless otherwise stated in these specifications.

76.11.4 PRICE TO COVER.

The contract price for Item CONSTRUCTION REPORT shall be a lump sum price and shall include the cost of all labor, materials, plant, equipment and insurance necessary or required to prepare the preconstruction report, including building examinations and do all other work incidental thereto all in accordance with the specifications and as directed by the Engineer.

76.11.5 PAYMENT.

No payment for the preconstruction report will be made until after the Department of Design and Construction has accepted the preconstruction report.

Item No.	Item	Pay Unit
ESCR-76.11CR-A	CONSTRUCTION REPORT FOR REACH A	L.S.
ESCR-76.11CR-B	CONSTRUCTION REPORT FOR REACH B	L.S.
ESCR-76.11CR-C	CONSTRUCTION REPORT FOR REACH C	L.S.
ESCR-76.11CR-D	CONSTRUCTION REPORT FOR REACH D	L.S.
ESCR-76.11CR-E	CONSTRUCTION REPORT FOR REACH E	L.S.
ESCR-76.11CR-E.WB	CONSTRUCTION REPORT FOR THE WILLIAMSBURG BRIDGE FOOTINGS IN REACH E	L.S.
ESCR-76.11CR-F	CONSTRUCTION REPORT FOR REACH F	L.S.
ESCR-76.11CR-G	CONSTRUCTION REPORT FOR REACH G	L.S.
ESCR-76.11CR-H	CONSTRUCTION REPORT FOR REACH H	L.S.
ESCR-76.11CR-I	CONSTRUCTION REPORT FOR REACH I	L.S.
ESCR-76.11CR-J	CONSTRUCTION REPORT FOR REACH J	L.S.
ESCR-76.11CR-K	CONSTRUCTION REPORT FOR REACH K	L.S.
ESCR-76.11CR-K.CT	CONSTRUCTION REPORT FOR CON ED B-CONVEYOR TUNNEL IN REACH K	L.S.
ESCR-76.11CR-K.MT	CONSTRUCTION REPORT FOR MTA L-TRAIN TUNNEL IN REACH K	L.S.

END OF SECTION

SECTION ESCR-76.21 – MONITORING AND POST-CONSTRUCTION REPORT

76.21.1 INTENT.

The intent of this section is to monitor and summarize the effects of construction activities on structures located within the influence line of work to be performed under the contract to ensure that the Contractor's proposed means and methods of construction do not create or aggravate any potentially dangerous conditions.

The Contractor will be required to adhere to all criteria, requirements and recommendations of the Engineer approved preconstruction report(s); if not, the Contractor must cease work until corrective actions are taken.

76.21.2 SPECIAL EXPERIENCE REQUIREMENTS.

The Contractor shall submit to the Engineer qualifications of the firm it proposes to provide the engineering services described in this section. The proposed firm must meet the following special experience requirements:

(1) Such firm must, within the last three (3) consecutive years, have successfully provided engineering services similar to the services described in this section on a minimum of two (2) comparable projects.

(2) Such firm must carry professional liability insurance as specified in Schedule "A".

Compliance with such special experience requirements will be determined solely by the Engineer. Once a firm is approved, no substitution will be permitted, unless the Engineer has approved the qualifications of the proposed replacement in writing in advance. If the qualifications of the proposed firm are not acceptable, the Contractor shall submit the qualifications of another proposed firm within fifteen (15) days of notice to do so.

The firm approved for the preparation of the preconstruction report(s) in accordance with Section ESCR-76.11 - Construction Report, may also be submitted for approval to perform the monitoring and post- construction report work.

76.21.3 SUBMITTALS.

(A) MONITORING REPORTS

The firm will be required to perform the monitoring during construction activity, including installation of sheet piles, piles, and ground improvement, and submit reports to the Engineer on a weekly basis. These reports shall include sketches noting the location of all monitoring points. The minimum monitoring points required are shown on the Contract Drawings; however, the Contractor and the consulting firm hired by the Contractor may add monitoring points as they see fit. Should any of the criteria set forth in the preconstruction report(s) be exceeded, the Engineer shall be notified immediately. Monitoring shall include but not be limited to the following:

(1) Settlement Monitoring

(a) For Existing Structures And/Or Buildings (other than Critical Structures as defined below):

(i) A series of reference points shall be established outside of the “radius of influence” (as previously described in Subsection 76.11.3, paragraph (C)) for monitoring structural settlements. All initial and subsequent readings shall be taken to the nearest one-hundredth (0.01) of a foot.

(ii) Structures and/or buildings shall be monitored daily for vertical and horizontal movement with respect to when work is being performed within the radius of influence. Upon completion of work within the radius of influence, buildings and/or structures shall be monitored weekly for the first month then monthly for the next five (5) months. In the event of an unusual or unexpected event, monitoring shall be performed within twenty-four (24) hours of the event.

(iii) Should the limit of horizontal and/or vertical movement, as set forth in the preconstruction report, of any building and/or structure be exceeded, the Contractor shall immediately and concurrently notify the Engineer and, at the Contractor’s own expense, follow the steps included in the preconstruction report outlined in Subsection 76.11.3, paragraph (F) to rectify the situation and prevent any further settlement of such building and/or structure. The Contractor shall be fully responsible for any damages to any foundations, walls or other portions of buildings and/or structures that may result during the courses of this construction. Any damage done by the Contractor, whether it is accidental or due to negligence or carelessness in performing the work included in this contract shall be made good by the Contractor at the Contractor’s own expense.

(iv) Permissible settlement for structures, other than critical structures, may be established by the Contractor’s consulting firm, but shall not exceed twice the amounts specified below for critical structures.

(b) For Critical Structures when pile and ground improvement installation is being performed:

(i) Critical structures include:
(1) The elevated FDR Drive structure,
(2) The Williamsburg Bridge,
(3) Houston St over the FDR Drive,
(4) 6th Street pedestrian bridge over the FDR Drive,
(5) The Con Edison conveyor tunnel,
(6) The MTA L-train tunnel,
(7) The Fireboat House,
(8) The former Gouverneur Hospital and Dispensary,
(9) East River Housing,
(10) Jacob Riis Houses,
(11) Public School 110, and
(12) Gouverneur Gardens.

(ii) Settlement points shall be installed at all critical structures, including columns of overhead structures adjacent to proposed construction work. A minimum of two (2) settlement points shall be established at each component of a critical structure or column. Additionally, for the Williamsburg Bridge and the MTA L-train tunnel, tiltmeters shall also be installed to monitor movement or tilting of these structures. Tiltmeters shall be provided on each Williamsburg Bridge foundation affected by the work, and within the MTA L-train tunnel at 50 ft spacing within the affected tunnel length.

(iii) A minimum of two (2) benchmarks shall be established for the settlement monitoring. The benchmark should be a minimum of fifty (50) feet distance from the component of the critical structure or columns and construction work alignment.

(iv) The initial survey of the settlement points shall be done prior to pile, sheet pile, or any ground improvement (jet grouting, rigid inclusions, or stone columns) or construction activity within one hundred (100) feet of the component of the critical structure or columns.

(v) A warning shall be issued if settlement reaches 1/8-inch, or tilt greater than 1/500.

(vi) All pile, sheet pile, or any ground improvement work (jet grouting, rigid inclusions, or stone columns), or construction activity within one hundred (100) feet of the critical structure or its columns shall be stopped if settlement reaches 1/4-inch.

(vii) Frequency of settlement/tiltmeter monitoring shall be as follows:

(1) Pile, sheet pile, or ground improvement installation between fifty (50) feet and one hundred (100) feet distance from the critical structure or its columns; once every four (4) days.

(2) Pile, sheet pile, or ground improvement installation within fifty (50) feet of the critical structure or columns; once every two (2) days.

(3) If the settlement reaches 1/8-inch or tilt is greater than 1/500; once a day.

(c) All survey readings shall be done by or under the immediate supervision of a Licensed Land Surveyor, currently registered in the State of New York. All survey readings shall include the imprint of the Surveyor's seal and signature.

(d) The Contractor shall transmit a copy of all readings to the Engineer on the same day they are taken.

(2) Vibration Monitoring

(a) For Existing Structures And/Or Buildings (other than critical structures as defined below):

(i) Should the Contractor employ means and methods of construction that will result in vibrations being imparted to the surrounding soil and/or buildings and/or structures, the Contractor shall monitor and record particle velocity. Locations of the monitoring points shall be placed in such a manner so as to ensure recordings that reveal any possibility of damage to existing structures and/or buildings. Location of the monitoring points shall be subject to the Engineer's approval.

(ii) These points shall be monitored at all times when means and methods of construction resulting in vibrations are employed. The maximum permissible peak particle velocity shall be that noted in the preconstruction report. Should particle velocities be exceeded the Contractor shall immediately cease operations and resort to another method which will eliminate or minimize the effect of vibrations.

(iii) It shall be the Contractor's responsibility to restore any buildings or structures damaged as a result of the Contractor's operations to its original condition or better.

(iv) The maximum permissible peak particle velocity may be established by the

Contractor's consulting firm, but shall not exceed twice the value specified for critical structures.

(b) For Critical Structures when piles, sheet piles, and ground improvement installation is being performed:

(i) Critical structures include:
(1) The elevated FDR Drive structure,
(2) The Williamsburg Bridge,
(3) Houston St over the FDR Drive,
(4) 6th Street pedestrian bridge over the FDR Drive,
(5) The Con Edison conveyor tunnel,
(6) The MTA L-train tunnel,
(7) The Fireboat House,
(8) The former Gouverneur Hospital and Dispensary,
(9) East River Housing,
(10) Jacob Riis Houses,
(11) Public School 110, and
(12) Gouverneur Gardens.

(ii) Vibrations at critical structures shall be monitored during the installation of piles, sheet piles, and ground improvement (jet grouting, rigid inclusions, and stone columns) that are between fifty (50) feet and one hundred (100) feet from the critical structure component or columns.

(iii) A total of two (2) seismographs shall be used for the monitoring; one (1) at each of the closest critical structure component or two (2) columns from pile installation.

(iv) Check the ambient vibration prior to vibration monitoring.

(v) The allowable limit of vibration during pile driving is 0.5-inch per second (in particle velocity) above the ambient vibration level. Stop pile driving if the vibration exceeds 0.5- inch per second above ambient.

(c) The results of the vibration monitoring shall be submitted to the Engineer on the same day of monitoring.

(B) POST-CONSTRUCTION REPORT

Within thirty (30) days of the completion of all work that necessitated monitoring, the chosen firm shall prepare and submit six (6) copies of a report(s) detailing the results of the monitoring program. The report(s) shall include a comparison of all assumptions and field-measured values. Should there be excessive discrepancies between the assumptions and field-measured values, an explanation shall be presented within the report(s). These reports shall include sketches of all monitoring points. The reports shall include the location and length of all piles and sheet piles driven superimposed on the geological profile. The location and lengths of piles and sheet piles to be installed are shown on the Contract Drawings. The post- construction report(s) shall be prepared by or under the immediate direction of a New York State Licensed Professional Engineer as evidenced by the imprint of the Professional Engineer's seal and signature on the document.

76.21.4 RESPONSIBILITIES OF THE CONTRACTOR.

Prior to bidding the Contractor shall examine the site and available subsurface inspection information and formulate means and methods of construction that will not result in any damage

to existing structures. Should the Contractor lack the expertise in evaluating the effects of the Contractor's means and methods of construction, the Contractor should prepare its bid in consultation with an experienced firm or authority. In any event, the Contractor will be held liable for any damage to any existing structures due to the Contractor's means and methods of construction.

In addition, should the results of the preconstruction report(s) indicate that damage will result from the Contractor's proposed means and methods of construction, the Contractor will be required to amend the Contractor's means and methods of construction in accordance with the preconstruction report, at no additional cost to the City.

76.21.5 PRICE TO COVER.

The contract unit price shall be the lump sum price bid and shall include the cost of all labor, materials, plant, equipment and insurance necessary or required to prepare weekly reports, examine buildings and structures, perform the construction monitoring, prepare the post-construction report(s) and do all other work incidental thereto all in accordance with the specifications, and as directed by the Engineer.

No separate or additional payment will be made for compliance with the requirements of the preconstruction report(s) including, but not limited to, any modification to the Contractor's means and methods of construction.

Payment for this work shall be made proportional to the work completed as follows:

Completion of Field Monitoring	60%
Acceptance of Post-Construction Report	40%

Item No.	Description	Pay Unit
ESCR-76.21MR-A	MONITORING AND POST-CONSTRUCTION REPORT FOR REACH A	L.S.
ESCR-76.21MR-B	MONITORING AND POST-CONSTRUCTION REPORT FOR REACH B	L.S.
ESCR-76.21MR-C	MONITORING AND POST-CONSTRUCTION REPORT FOR REACH C	L.S.
ESCR-76.21MR-D	MONITORING AND POST-CONSTRUCTION REPORT FOR REACH D	L.S.
ESCR-76.21MR-E	MONITORING AND POST-CONSTRUCTION REPORT FOR REACH E	L.S.
ESCR-76.21MR-E.WB	MONITORING AND POST-CONSTRUCTION REPORT FOR WILLIAMSBURG BRIDGE IN REACH E	L.S.
ESCR-76.21MR-F	MONITORING AND POST-CONSTRUCTION REPORT FOR REACH F	L.S.
ESCR-76.21MR-G	MONITORING AND POST-CONSTRUCTION REPORT FOR REACH G	L.S.
ESCR-76.21MR-H	MONITORING AND POST-CONSTRUCTION REPORT FOR REACH H	L.S.
ESCR-76.21MR-I	MONITORING AND POST-CONSTRUCTION REPORT FOR REACH I	L.S.

ESCR-76.21MR-J	MONITORING AND POST-CONSTRUCTION REPORT FOR REACH J	L.S.
ESCR-76.21MR-K	MONITORING AND POST-CONSTRUCTION REPORT FOR REACH K	L.S.
ESCR-76.21MR-K.CT	MONITORING AND POST-CONSTRUCTION REPORT FOR T HE CON ED B-CONVEYOR TUNNEL IN REACH K	L.S.
ESCR-76.21MR-K.MT	MONITORING AND POST-CONSTRUCTION REPORT FOR THE MTA L-TRAIN TUNNEL IN REACH K	L.S.

END OF SECTION

SECTION ESCR-77 – ECO TIDE POOL ARMOR, ECO ARMOR BLOCKS, AND ECO SEA PILLARS

77.01 INTENT.

This section describes the use of ECO Tide Pool Armor, Armor Blocks, and Sea Pillars manufactured by ECOncrete.

77.02 DESCRIPTION.

The ECOncrete® products covered by this section include:

1. ECO Armor Blocks (Units) – a concrete cube with edges having lengths of 4 ft. shall be cast utilizing a wet-cast concrete mix and exhibit a final handling weight in excess of 5,575 pounds (2,530 kg) per unit.
2. Tide Pool Armor (Units) – a concrete semi-parallelepiped unit having length of 4 ft., width of 3.6 ft., and height of 2.3 ft. shall be cast utilizing a wet-cast concrete mix and exhibit a final handling weight in excess of 3,100 pounds (1,400 kg) per unit.
3. Sea Pillars (Units) – a bespoke concrete covering for 24.625 inch diameter concrete filled piles. Unit dimensions and weight, as well as surface design shall be as shown on the Contract Drawings.

77.03 PERFORMANCE REQUIREMENTS

The ECOncrete® products shall comply with ACI 318 and design recommendations of PCI MNL 120, "PCI Design Handbook - Precast and Prestressed Concrete," applicable to types of architectural precast concrete units indicated.

77.04 MATERIALS.

(A) CONCRETE

Concrete used in the production of the Units shall be first purpose, fresh concrete. It shall not consist of returned, reconstituted, surplus, or waste concrete. It shall be an original production mix meeting the requirements of ASTM C94 and include the following:

1. Portland Cement: ASTM C 150/C 150M, Type V, gray, unless otherwise indicated. Supplementary Cementitious Materials may include:
    - Ground Granulated Blast-Furnace Slag: ASTM C 989, Grade 100 or 120
2. Normal-Weight Aggregates: Except as modified by PCI MNL 116, ASTM C 33/C 33M, with coarse aggregates complying with Class 4S.
3. Water: Potable, according to ASTM C1602; free from deleterious material that may affect color stability, setting, or strength of concrete and complying with chemical limits of PCI MNL 116 including “A” prefix therein.
4. Air-Entraining Admixture: ASTM C 260, certified by manufacturer to be compatible with other required admixtures.

5. Chemical Admixtures: Certified by manufacturer to be compatible with other admixtures and to not contain calcium chloride, or more than 0.15 percent chloride ions or other salts by weight of admixture.
6. ECOncrete® admix., a bio-enhancing admixture.

(B) REINFORCEMENT

1. Reinforcing Fibers: ASTM C1116 (Standard Specification for Fiber-Reinforced Concrete).
2. Only non-metallic structural fibers shall be utilized for the casting of units.

77.05 SUBMITTALS.

(A) CONCRETE MIX DESIGN

Concrete mix design with product and test data demonstrating compliance with Paragraph ESCR-77.04

Concrete mix design shall indicate strength and type of concrete; materials, type, brand and amounts of material constituents, including but not limited to cement, admixtures and applicable reference specifications.

Re-qualifications of materials or mix proportions required as a result of changes, test failures, or failure to gain initial approval for any reason.

(B) CERTIFICATES

1. Cement – supplier's certified mill reports for cement produced within 30 days of the project start date and every other mill report thereafter throughout the project.
2. Admixtures – manufacturer's letter of certification, signed by a duly authorized manufacturer's representative, dated not less than 30 days from the project start date, and manufacturer's product data
3. Aggregate – supplier's test reports generated within one year of the project start date showing evaluation and compliance of product in accordance with the specification requirements of ASTM C33.
4. Water – supplier's test reports generated within three months of the project start date showing evaluation and compliance of product in accordance with the specification requirements of ASTM 1602.
5. Manufacturers' certification of compliance with specified materials and products

(C) CONCRETE PLACEMENT PLAN

Concrete placement plan, plan for mixing, transporting, conveying, placing, finishing, and curing concrete.

(D) SHOP DRAWINGS

Shop Drawings and required structural computations for formwork

77.06 FABRICATION.

(A) GENERAL

1. Comply with requirements in PCI MNL 116 including “A” prefix therein and requirements in this Section for measuring, mixing, transporting, and placing concrete. After concrete batching, no additional water may be added.
2. Place concrete in a continuous operation to prevent cold joints or planes of weakness from forming in precast concrete units.
3. Thoroughly consolidate placed concrete by internal and external vibration without dislocating or damaging built-in items, and minimize pour lines, honeycombing, or entrapped air voids on surfaces. Use equipment and procedures complying with PCI MNL 116 including “A” prefix therein.
4. Place self-consolidating concrete without vibration according to PCI TR-6, "Interim Guidelines for the Use of Self-Consolidating Concrete in Precast/Prestressed Concrete Institute Member Plants." Ensure adequate bond between face and backup concrete, if used.
5. Comply with PCI MNL 116 including “A” prefix therein for hot and cold weather concrete placement.
6. Identify pickup points of the Units and orientation in structure with permanent markings, complying with markings indicated on Shop Drawings. Imprint or permanently mark casting date on each Unit on a surface that does not show in finished structure.
7. Cure concrete, according to requirements in PCI MNL 116 including “A” prefix therein, by moisture retention without heat or by accelerated heat curing using low-pressure live steam or radiant heat and moisture. Cure units until compressive strength is high enough to ensure that stripping does not have an effect on performance or appearance of final product.
8. Discard and replace Units that do not comply with requirements, including structural, manufacturing tolerance, and appearance, unless repairs meet requirements in PCI MNL 116 including “A” prefix therein and Engineer’s approval.

(B) FABRICATION TOLERANCES

Fabricate Units to shape, lines, and dimensions indicated so each finished Unit complies with PCI MNL 116 including “A” prefix therein product tolerances as well as position tolerances for cast-in items.

(C) FINISHES

Finishes shall be the as-cast surface finish. Provide surfaces to match approved sample for acceptable.

(D) QUALITY-CONTROL TESTING

Test and inspect precast concrete according to PCI MNL 116 including “A” prefix therein requirements. If using self-consolidating concrete, also test and inspect according to PCI TR-6, ASTM C1610/C1610M, ASTM C1611/C1611M, ASTM C1621/C1621M, and ASTM C1712.

(E) PRODUCT TESTING AND INSPECTION.

All Units shall be sound and free of defects that would interfere with either the proper placement of the unit or impair the performance of the system.

The following defects as identified by the Engineer, shall be deemed grounds for rejection:

1. Cracks exceeding 0.016 inches (0.04 mm) in width and/or 0.1 inches (2.54 mm) in depth
2. Chipping resulting in a weight loss exceeding 0.5% of the minimum concrete unit weight as specified in Paragraph ESCR-77.02

Rejected products shall be replaced at no additional cost to the City.

77.07 MEASUREMENT.

The quantity of ECO Armor Block, Tide Pool Armor, and Sea Pillar to be measured for payment shall be the number of units satisfactorily installed as measured in its final position.

77.08 PRICE TO COVER.

The contract price shall cover the cost of all labor, materials, equipment, insurance, and incidentals required to furnish and install complete in full compliance with the requirements of the specifications.

Payment will be made under:

Item No.	Item	Pay Unit
ESCR-77	ECO ARMOR BLOCK	EA
ESCR-77-1	ECO TIDE POOL ARMOR	EA
ESCR-77-2	ECO SEA PILLAR	EA

END OF SECTION

SECTION ESCR-203– OBSTRUCTIONS TO PREFABRICATED VERTICAL DRAINS OR DEEP SOIL MIX COLUMN INSTALLATION

ESCR-203.1 INTENT.

In parts of the construction area, debris, boulders, or other obstructions may be encountered, making it difficult to install Prefabricated Vertical Drains (PVDs) or Deep Soil Mix (DSM) columns in the location(s) required in the projects plans and by the Engineer. In such cases, the Engineer may order the Contractor to resort to augering, drilling or may order the PVDs or DSM columns to be abandoned and additional PVDs or DSM columns installed.

This section describes procedures in the event an obstruction is encountered during the installation of PVDs or DSM columns.

ESCR-203.2 DESCRIPTION.

Under this section the common means and procedures to auger or drill through obstructions during PVDs and DSM columns installation are defined with respective payment to cover the work to remove the obstruction as directed by the Engineer.

An obstruction shall be defined as any natural or man-made object which does not permit the PVD or DSM column to be advanced with mandrel insertion or a mixing tool, respectively. Soils with naturally high driving resistance shall not be considered to be an obstruction.

It shall be the sole determination of the Engineer as to whether or not an obstruction has been encountered during PVD or DSM column installation.

NYSDOT Special Specification Item 203.12030017 Prefabricated Vertical Drains and NYSDOT Special Specification Item 203.99010039 Deep Soil Mixing will define the work for the PVDs and DSM columns, respectively.

ESCR-203.3 MATERIALS.

Not Applicable.

ESCR-203.4 SUBMITTALS.

Not Applicable

ESCR-203.5 METHODS.

(A) NOTIFICATION

Notify the Engineer immediately in writing of the failure of a PVD or DSM column to meet any requirement of the respective PVD or DSM column section. Include all information required for the evaluation of augering, drilling or abandonment.

If the Engineer determines that a PVD or DSM column cannot be advanced due to an obstruction and concurs with the Contractors suggested means and methods, the engineer will define items of payment and define units of measure per the guideline below.

(B) AUGERING OR DRILLING

The Contractor shall have on hand suitable equipment for augering or drilling through buried timbers, cribbing, boulders and other obstructions, and shall employ this equipment, when directed, in a manner satisfactory to the Engineer.

Augering or drilling depth shall be as computed by the Engineer from the tip of the drilled-out obstruction to the ground surface. No augering or drilling shall be performed unless approved by the Engineer and done in the presence of the Engineer.

ESCR-203.6 MEASUREMENT AND PAYMENT

Payment for OBSTRUCTION CLEARANCE FOR PREFABRICATED VERTICAL DRAIN INSTALLATION (PRE-DRILLING) AND OBSTRUCTION CLEARANCE FOR DEEP SOIL MIX COLUMN INSTALLATION (PRE-DRILLING) shall be the number of vertical LINEAR FEET of augering or drilling when ordered by the Engineer. Estimated vertical footage shall be as defined by this section and approved to the satisfaction of the Engineer.

No separate or additional payment will be made for any mobilization or other work incidental thereto.

Where due to an obstruction the Engineer deems it necessary to abandon a PVD in place, payment for the cost of the length of PVD abandoned from the tip of the abandoned PVD to the ground surface shall be made under the prices bid per vertical foot for the respective PVD item, Item No. 203.12030017.

Where due to an obstruction the Engineer deems it necessary to abandon a DSM column in place, payment for the cost of the DSM column abandoned from the tip of the abandoned DSM column to the ground surface multiplied by the cross-sectional area of the DSM column shall be made under the prices bid per cubic yard for the respective Deep Soil Mixing item, Item No. 203.99010039. No separate or additional payment will be made for any mobilization or other work incidental thereto.

Item No.	Item	Pay Unit
ESCR-203.12 PVD	Obstruction Clearance for Prefabricated Vertical Drain Installation (Pre-Drilling)	LF
ESCR-203.99 DSM	Obstruction Clearance for Deep Soil Mix Column Installation (Pre-Drilling)	LF

SECTION ESCR-551 – STEEL PIPE PILES

551.01 INTENT.

This section describes steel pipe piles for use in the esplanade, esplanade cut-off wall, esplanade/waterfront Type III light pole foundations, floodgate and floodwall foundations.

551.02 DESCRIPTION.

Steel pipe piles, under this section, shall refer to all permanent steel pipe piles used to support the floodwall and floodgate foundations and the esplanade and esplanade cut-off wall.

551.03 MATERIALS.

(A) Steel pipe piles shall be ASTM A252 Grade 3 (Mod), 50 ksi yield, unless otherwise shown on the Contract Drawings. Pipe piles shall be either seamless pipe or full penetration electric resistance butt welded with straight or spiral seams.

(B) Pipe shall be welded in a manner that welding shall not crack or fail when the pile is subjected to its intended use, including during driving. Arrange for welds on pipes to be ultrasonically tested by the manufacturer in accordance with the provisions for Nondestructive Electric Test of Weld Seam of ASTM A53. Diameter and wall thickness shall be as shown on the Contract Drawings.

(C) Steel pipe piles shall be coated in accordance with Section ESCR-559 Protective Coating for Waterfront Structures.

551.04 SUBMITTALS.

(A) EQUIPMENT

Contractor shall submit complete descriptions of the equipment for the Work, including caps, leads, and guides where required. The description of the hammer proposed for driving piles shall include make and model number, weight and length of stroke of striking parts, the number of blows per minute at which it operates the area of the piston, and the effective pressure on the piston to be maintained during driving for double acting hammers.

(B) SHOP DRAWINGS AND AS-BUILT DRAWINGS

Fabrication drawings of piles showing location of all splices and weld details.

As-built drawing(s) showing the exact location of all piles driven and identifying abandoned piles, prepared by a surveyor licensed in the State of New York.

(C) DESIGN DATA

<u>Computerized Pile Driving Wave Equation Analysis (WEAP)</u>

The Contractor shall perform computer pile driving wave equation analysis to determine the suitability of the driving equipment proposed to drive the pile to the required ultimate capacity, and to insure against overstress during driving, including initial driving through soft soils. Submit wave equation analyses with pile driving equipment submittal. Wave equation computer programs such as “Wave Equation Analysis of Pile Driving, WEAP Program” and “TTI (Texas Transportation Institute) Program, Pile Driving Analysis Wave Equation,” are acceptable. The results of the analysis shall be bound in a comprehensive report and submitted to the Engineer for approval prior to the ordering or driving of any piles.

High-Strain Dynamic Pile Testing by means of Pile Driving Analyzer (PDA)

The Contractor shall submit the results of all PDA testing, including CAPWAP analyses to the Engineer for review and approval. PDA and CAPWAP results report shall be provided for initial driving and restrike.

Pile Load Test Procedure and Set-Up

Submit the proposed set-up plan and procedure for performing the required static and dynamic pile load tests, and lateral pile load tests, for review and approval by the Engineer. The proposed location of the test piles is indicated on the Drawings.

Contractor shall submit static compression load test reports and lateral pile load test reports for the Engineer for review and approval.

(D) CERTIFICATES

Submit certificate stating that all materials and procedure meet or exceed the specified requirements of this Section.

Certified mill test reports for steel pipe piles.

A certification by pile hammer manufacturer of the energy, condition and operational characteristics of each pile hammer.

Test reports for welding.

(B) CONSTRUCTION PLAN

Plan for positioning coated section of pipe within limits specified in this Section.

The proposed procedure for splicing piles, including a plan for positioning all field and shop splices to meet requirements specified in this Section, and detailed procedures for performing field splices.

Verification of welder qualifications.

The proposed sequence for driving all piles.

Test and production pile driving plan and driving resistance criteria including but not limited to the following which shall be approved by the Engineer prior to start of production pile driving:

Minimum blows per foot

Maximum blows per foot

Minimum tip elevation(s)

Coating system and extent

(C) NOISE MITIGATION PLAN

Submit written plan certifying that all tools and equipment have been maintained so that they operate at normal manufacturer’s operating specifications, including at peak loading, in accordance with the Rules of the City of New York (RCNY). The approved plan must be posted conspicuously and readily available on site for inspection.

551.05 METHODS.

(A) PILE DRIVING EQUIPMENT

Use rigid frame, fixed-lead type driving equipment capable of supporting the pile firmly in a vertical position or to the required batter.

Leads for the hammer shall be of sufficient length so that use of a follower will not be necessary, unless otherwise approved by the Engineer.

Use an approved driving head designed to properly fit the head of the pile or a cast steel, outside type drive sleeve to prevent damage to the top of the pile during driving.

Use an approved cap block cushion consisting of alternating plates of phenolic laminate and aluminum designed to prevent damage to the piles while also transmitting the amount of transferred energy to the pile top required by the Contract Drawings. The phenolic laminated plates shall be either "Micarta" as manufactured by Norplex Micarta, 665 Lybrand Street, PO Box 977, Postville, Iowa 52162, or "Conbest" as manufactured by Hammer & Steel, Inc., 11916 Missouri Bottom Road, St. Louis, MO 63042. Substitutes not employing phenolic laminate will not be permitted.

Do not use wood chips, small wood blocks, shavings or any extraneous material to absorb the energy of the hammer.

If piles cannot be installed using fixed-lead type driving equipment due to inaccessibility, use of hanging leads may be considered if the following provisions are complied with:

1. Furnish a plan showing the piles that are considered inaccessible and that will not be driven using fixed-lead type driving equipment. The determination of the acceptability of using hanging leads will be made solely by the Engineer.
2. Use a driving frame template or false work to maintain location tolerance and orientation (batter) requirements specified in ESCR-551.05F and on the Contract Drawings.
3. Specify the type of piles or other method of support and minimum tip elevation of piles used to support frame template and false work.
4. Specify the methods of retaining the driven piles in place upon removal of the frame template and prior to cap construction.
5. Surveying requirements

Prior to driving piles at each bent or cap, furnish the following to the Engineer:

- Sequence of installation for all inaccessible piles.
- Survey of frame location and elevation at each bent or for each row of piles.

Survey location and orientation of piles upon completion of all piles in a bent or cap prior to driving piles in next bent or cap. Furnish access for the Engineer to perform visual inspection of piles.

(B) PILE DRIVING ANALYZER (PDA)

PDA measurements will be performed by the Contractor at the start of pile driving. If, as a result of using hanging leads, the Engineer determines that additional PDA

measurements are required to verify the consistent performance of driving system, the number and frequency of additional testing shall be as determined by the Engineer. Contractor shall provide assistance to the Engineer by performing the additional testing requested, and as required on the Contract Drawings at no additional cost. Contractor shall perform CAPWAP analyses for each PDA tests performed. PDA and CAPWAP analyses shall be performed for all test piles during initial driving and restriking. All dynamically tested piles shall be restriked at no additional cost. Contractor shall provide a report for all test piles providing PDA and CAPWAP results for initial driving and restriking.

(C) PILE LOAD TESTS

The proposed locations of the test piles are indicated on the Contract Drawings. Static compression load tests shall be performed in accordance with ASTM D1143, Standard Procedure, to 200% of the allowable compression pile load, as specified in the New York City Building Code. Lateral load tests shall be performed in accordance with ASTM D3966, Standard Procedure, to 200% of the allowable lateral pile load, as specified in the New York City Building Code.

The Contractor shall retain the services of a New York State Licensed Professional Engineer to perform load tests on the pile piles, both in compression and lateral, at the locations shown in the Contract Drawings.

A test report, in accordance with ASTM D1143, shall be submitted for each compression pile load test.

A test report, in accordance with ASTM D3966, shall be submitted for each lateral pile load test.

(D) PILE HAMMER

Use a pile hammer complying with this specification section. Hammer used shall be subject to prior approval by the Engineer.

Furnish hammer of the type and energy rating as approved by Engineer; hammer capable of developing the indicated ultimate pile capacity considering hammer impact velocity; ram weight; stiffness of hammer and pile cushions; cross section, length, and total weight of pile; and character of subsurface material to be encountered. Maximum stress during pile driving shall not exceed 90% of the steel yield strength. Obtain required driving energy of hammer, except for diesel hammers, by use of a heavy ram and a short stroke with low impact velocity. At final driving, operate diesel powered hammers at rate recommended by manufacturer for hard driving. Maintain pressure at steam or air hammer so that: (1) for double-acting hammer, the number of blows per minute during and at completion of driving of a pile is equal approximately to that at which hammer is rated; (2) for single-acting hammer, there is a full upward stroke of the ram; and (3) for differential type hammer, there is a slight rise of hammer base during each downward stroke.

Keep hammer in good mechanical condition and operate it at the speed and pressure recommended by the manufacturer.

During pile driving operations, the Engineer may make occasional measurements of the velocity of the hammer ram using a Hammer Performance Analyzer (radar gun device), manufactured by Pile Dynamics, Inc., or similar. If the energy per blow computed on the basis of the measured ram velocity at impact is less than

80 percent of the rated energy per blow as specified by the manufacturer of the pile hammer, make all necessary repairs so as to improve the energy output to a value of at least 80 percent of the rated energy per blow or, alternatively, replace the pile hammer.

Use air compressor or hydraulic pump that meets minimum requirements for capacity or horsepower, as recommended by hammer manufacturer.

(E) WELDING AND SPLICING

Perform welding in accordance with requirements for shielded metal arc welding of AWS D1.1 for buildings and other structures.

AWS provisions for bridge construction shall apply where applicable. All splices shall be of the full penetration butt weld type and shall develop the full strength of the pile. All welds shall be visually inspected and all shop splices shall be ultrasonically tested. All protective coating shall be repaired after welding is completed.

Field welding, qualification of welders, and inspection of welds shall be in accordance with AWS D1.1. All pipe pile field splices shall be of the full penetration butt weld type and shall develop the full strength of the pile.

All field welds shall be visually inspected by an AWS certified weld inspector and 10% of field splices shall be ultrasonically tested.

Coordinate the Work and timely notify the Engineer to ensure compliance with all testing and inspection procedures required by the Engineer. Notify the Engineer 24 hours prior to performing field welding.

All pile splice shall be full penetration butt welds. An approved jig or alignment device shall be used to maintain the required straightness of pipe. For splices made during pile installation, rigid frame pile leads may be used as a jig in a manner approved by the Engineer.

Unless otherwise permitted by the Engineer based on field conditions, the number and location of splices shall comply with the following limitations:

1. No more than three splices per pile over 100 feet long.
2. No more than two splices per pile up to 100 feet long.
3. No splice closer than 25 feet from the tip.
4. No splice closer than 35 feet from the top.

(F) ALIGNMENT AND TOLERANCES

After splicing, the alignment of the centering of the undriven portion of the pile shall not deviate from the alignment of the centering of the driven portion of the pile by more than 3/8 inch in 40 feet.

Alignment deviation is defined as the horizontal offset of the centerline of the pile at the top of the pile divided by the length over which the offset is measured. After installation, the alignment deviation of the pile centerline shall not exceed two percent from vertical for vertical piles and two percent (shallower or steeper) from the batter shown on the Contract Drawings for batter piles.

Horizontal deviation is defined as the difference in horizontal position of any point on the centerline of the pile below the pile top from the design horizontal position

of the corresponding point as shown on the Contract Drawings. After installation, the horizontal deviation of any point shall not be greater than an amount equal to four percent of the vertical distance from the cut-off elevation to the point in question, unless otherwise shown on the Contract Drawings.

A light source lowered to the bottom of the pile shall remain visible. However, if eye contact with the light source is lost, a measurement will be made by the Engineer with an inclinometer to determine if the pile meets the requirements of this Section.

Piles at cut-off elevation shall not deviate laterally from required location by more than 1.5 inches, and as shown on the Contract Drawings. Piles shall not be pulled into location by more than amount shown on the Contract Drawings.

(G) PILE DRIVING

Do not drive piles until excavation or filling in the area they are to occupy has been completed to the design grades shown on the Contract Drawings.

Do not drive piles until the surface is clear of debris or other materials that may interfere with pile driving. Protect existing structures, including overhead and buried utility lines. Contractor shall perform exploratory test pits in the area of the proposed pile driving as required to first expose any buried utilities prior to any pile driving at no additional cost to the City.

Do not drive piles until the Engineer has approved sequence of driving for all piles.

The Contractor shall follow the requirements in Con Ed Specification CE-SI-1080 Guidelines for Protecting Existing Underground Transmission Electric Facilities from Nearby Construction Activities for any pile driving adjacent to Con Ed electric facilities.

Perform driving operations only in the presence of the Engineer.

Maintain top of pile normal to the driving force. Maintain accurate alignment of the pile, hammer and leads to minimize bowing of pile during impact of the hammer ram.

Drive piles to the minimum tip penetration(s) and to the driving resistance shown on the Contract Drawings. Take corrective action, if required, to prevent observable impact bowing of pile at final driving resistance.

Drive piles without interruption from the first hammer blow until required penetration and driving resistance have been attained, unless otherwise approved by the Engineer. If interruption of driving is necessitated by job requirements as approved by the Engineer, upon resuming driving, overcome friction due to the stoppage and drive or use other approved means of advancing the pile to the approximate tip elevation of immediately adjacent piles and to the required driving resistance shown on the Contract Drawings.

When resistance to driving makes it impossible to advance the pile to the required minimum tip penetration, spud, drill and drive or use such other means as necessary to permit advancement to required minimum tip penetration, and then drive to the resistance shown on the Contract Drawings. Jetting will not be permitted.

Obstructions encountered during driving must be removed or the Contractor may penetrate the obstruction by pre-drilling, pre-augering, spudding, or other means.

At the completion of the driving operation on a pile, the pile shall be undamaged, free of leaks and other defects and in compliance with the requirements of this Section.

Cut piles off at cut-off elevation shown on the Contract Drawings as soon as practical after driving and any required redriving.

When required, install indicator piles in locations and sequence shown on Contract Drawings. Indicator piles shall be dynamically tested piles, with PDA and CAPWAP analyses performed for initial driving, and restriking of the piles.

(H) ROCK SOCKETS

Rock sockets shall be installed as shown on the Contract Drawings.

Pipe Pile Installation

The Contractor shall choose such means as necessary to seal the pipe piles onto or into the rock. The Contractor may use impact, vibratory, or drilling methods, or any combination of these, as the Contractor deems necessary, to produce the finished pipe pile as shown on the Drawings. Blasting is prohibited, and no means shall be employed which disturb existing construction.

The socket shall be cut into the rock, and the bottom of the socket shall be level so that horizontal bearing is achieved. The diameter and depth of the socket shall be shown on the Contract Drawings. The diameter of the socket specified shall be maintained the entire length of the socket. The Engineer may direct the Contractor to cut the socket deeper than specified, if in the Engineer's opinion, this becomes necessary.

Concrete Grout

Concrete/grout 28-day compressive strength shall be as shown on the Contract Drawings.

Concrete/grout shall be tremied or pumped in a continuous operation. If the placement is interrupted, special procedures may be required prior to resumption of the pour, as directed by the Engineer.

Concrete/grout may be placed underwater by pumping, or by the tremie method.

The bottom of the socket shall be sounded and the depth determined immediately before concrete placement. Not more than ½-inch of soil residue shall be permitted at the bottom of the socket.

If the soil or any other material persists in entering the drilled socket, the socket may be grouted, the grout allowed to harden, and the socket re-drilled.

The tremie pipe or grout pipe shall extend to within six (6) in. of the bottom of the socket. The pipe shall remain a minimum of six (6) ft below the top of the concrete at all times after attaining that depth.

The tremie operation shall continue until a minimum of one-third of a cubic yard of concrete is pumped over the top of the required concrete top.

(I) CORRECTIONS OF DEFICIENCIES

Notify the Engineer immediately in writing of the failure of a pile to meet any requirement of this Section. Include all information required for the evaluation of remedial measures, including information required for redesign.

If the Engineer determines that a pile does not meet the requirements of this Section due to encountering an obstruction, then the following shall apply:

If the Engineer determines that a pile does not meet the requirements of this Section for any reason other than encountering an obstruction, the Contractor shall perform all remedial work associated with the deficient pile, including changes to concrete and reinforcement steel, at no additional cost.

An obstruction shall be defined as any natural or man-made object which does not permit the pile to be advanced by driving or driving and spudding with the approved pile driving hammer. Soils with naturally high driving resistance shall not be considered to be an obstruction.

It shall be the sole determination of the Engineer as to whether or not an obstruction has been encountered during pile driving.

If a pile fails to comply with the alignment or location requirements of Section 551.05F, the Engineer will calculate the load capacity requirements of that pile or, if in a pile group, each pile in that pile group, based on the actual "as-driven" alignment and locations. If the calculation indicates that the loading on that pile or, if in a pile group, on any pile in that pile group, exceeds 110 percent of the design load, then perform such remedial work as approved by the Engineer, including but not limited to redriving piles, furnishing and driving additional piles at locations approved by the Engineer and modifying concrete or reinforcement steel.

In the case of a pile with some deficiency that affects load capacity, the Engineer will calculate the load capacity requirements of that pile, based on its actual, "as-driven" location and alignment. If the calculation indicates that the loading on the pile exceeds some reduced allowable loading less than the design load, including a zero loading, as determined in the sole judgment of the Engineer, then perform such remedial work as approved by the Engineer, including but not limited to redriving piles, furnishing and driving additional piles at locations approved by the Engineer and modifying concrete or reinforcement steel.

If a pile fails to comply with the requirements of this Section and the Engineer determines that modification to concrete or reinforcement steel or the driving of additional piles is necessary, the City will perform all required redesign and detailing.

The Contractor, at their option and at any time as determined by the Contractor that a pile will not satisfy the requirements of this Section for a reason other than encountering an underground obstruction, may abandon such pile and replace it with a new pile or piles rather than await direction or approval from the Engineer. However, in exercising this option, the Contractor assumes the risk that such replacement pile or piles have not been installed at the proper design location and alignment so as to carry satisfactorily the design load as determined by subsequent analysis performed by the Engineer. Such abandonment shall be for the Contractor's convenience at no cost to the City and subject to all applicable provisions of the Contract.

Abandoned piles shall be cut off one foot below the elevation of the bottom of the pile cap as shown on the Contract Drawings and filled with sand. If directed by the Engineer to fill an abandoned pile with concrete, the Contractor will be compensated for the difference between the cost of sand and concrete for the volume of concrete used to fill the pile.

(J) REDRIVING PILES

Unless otherwise shown on the Contract Drawings, take optical survey measurements to establish the elevation of the top of each pile immediately after driving (or redriving) and, subsequently, after driving (or redriving) the entire pile group. Redrive piles that the Engineer determines have heaved or uplifted 0.25 inch or more from their original elevations and piles immediately adjacent thereto as directed by the Engineer.

Redrive until both the original tip elevation and the driving resistance shown on the Contract Drawings have been obtained, except that if original tip elevation cannot be reached, driving may be discontinued at a resistance of 200 percent of the allowable capacity shown on the Contract Drawings. All piles must achieve an ultimate pile capacity equivalent to 200% of the allowable pile capacity required.

Perform redriving if pile was not initially driven to the verified and agreed upon driving criteria, and pile set up is being relied on. The sequence and scheduling of redriving must be approved by the Engineer.

Equipment for redriving shall be as specified for original driving except that use of a free hanging hammer will be permitted.

Do not cut off piles until the Engineer has determined that no further redriving is required.

(K) INSPECTION

Cooperate with the Engineer and furnish services as the Engineer may require for inspecting and obtaining data. Typical of these services shall be the measurement of length of piles, painting footmarks on piles, furnishing light and ladder if required, and moving materials or equipment as required to provide access to and clear observation of the piles.

After all piles for each pile group have been driven, the Engineer will inspect each pile.

The Engineer will keep a record of each pile driven. This record will include the following data:

1. Date of driving.
2. Pile number.
3. Type and size of pile.
4. Type, number and location of splices.
5. Pile length before driving.
6. Length of cut-off.
7. Elevation of pile top and tip to nearest 0.1 inch immediately after driving.
8. Elevation of pile top after driving entire pile group to the nearest 0.1 inch to determine amount of heave.
9. Final elevation of pile tip after required redriving of entire pile group.
10. Lower limit (elevation) of pile coating after driving.
11. Hammer type and size.

12. Hammer speed.
13. For impact hammers, blows per foot of driven length, and blows per inch where driving resistance exceeds 75 blows per foot.
14. Blows per 1/2 inch of redrive.
15. The time pile driving is started, interrupted, resumed and stopped.
16. Description of any unusual circumstances affecting the driving of the particular pile.
17. Sounded length of each pile.
18. Slope of pile.
19. Lowest elevation at which light source is fully visible and elevation at which eye contact with light source is lost.

(L) WELDING OF HEADED SHEAR STUDS ON PILES

Headed shear studs shall be welded to the pipe piles at the locations indicated on the Contract Drawings, and as directed by the Engineer. The studs shall be installed on-site, following pile installation. The pipe piles shall not be coated in the immediate area surrounding the shear studs, or the coating shall be removed prior to stud installation.

The headed shear studs shall be of the size indicated on the Contract Drawings. They shall not be coated. They shall be Nelson Type H4L or S3L, or approved equal, flux filled, welded as shown on the Drawings. Studs shall be from cold drawn steel Grades C-1010 through C-1020, per ASTM A108, and shall be welded per the manufacturer's recommendations. The minimum ultimate tensile strength shall be 60 ksi, and the minimum yield strength shall be 50 ksi.

(M) PRE-DRILLING

Pre-drilling or pre-augering for installation of pipe piles shall be performed to clear obstructions and remove portions of existing historic structures to allow for installation of pipe piles to the specified tip elevation as shown on the Contract Drawings.

Pre-drilling or pre-augering a hole of maximum diameter two inches smaller than the pile diameter may be used to advance the pile to a penetration no deeper than the required minimum tip penetration, subject to approval of the Engineer, providing the pile is driven to the required driving resistance shown on the Contract Drawings. In granular soils below the ground water level, stabilize the hole by use of drilling fluids as approved by the Engineer.

<u>Waterfront Cut-off Wall (Continuous Pipe Pile Wall)</u>

Where indicated in the Contract Drawings, the Contractor shall drill through obstructions, including those caused by the timber piles of the existing waterfront retaining structure to allow for installation of the proposed steel pipe pile wall. The Contractor shall choose such means as necessary to clear obstruction of existing timber pile(s) to allow for installation of proposed cut-off wall. The Contractor may use impact, vibratory, or drilling methods, or any combination of these, as the Contractor deems necessary, to advance the pipe piles to the specified tip elevation as indicated on the Drawings.

Prior to commencement of pile installation, the Contractor and the Engineer must mutually agree on the pre-drilling criteria.

<u>FDR Drive Floodgate Foundations (Pipe Pile)</u>

As indicated in the Contract Drawings, historic bulkhead structures may be located below the alignment of the proposed FDR Drive flood gates. Where installation of proposed pipe pile foundations requires, the Contractor shall remove portions of the existing structure through pre-drilling. The Contractor shall choose such means as necessary to remove the existing timber cribbing within the FDR Drive roadway to allow for installation of the proposed pipe piles of the

flood gate foundations. The Contractor may use impact, vibratory, or drilling methods, or any combination of these, as the Contractor deems necessary, to allow for the advancement of the pipe piles to the specified tip elevation as indicated on the Drawings. The Contractor shall fill any pre-drilled hole (or casing) with pea gravel, to be approved by the Engineer, prior to installation of the pipe pile. The Contractor's proposed methodology for pre-drilling shall accommodate requirements for work periods and roadway closures/openings as dictated by NYCDOT OCMC.

551.06 MEASUREMENT.

The quantity of steel pipe piles to be measured for payment shall be the number of linear feet, measured to the nearest half foot, installed to the satisfaction of the Engineer. Pile length shall be measured from final cut-off elevation to pile tip elevation. No payment or allowance will be made for steel pipe piles installed beyond the limits specified.

The quantity of steel pipe piles installed in predrilled locations to be measured for payment shall be the number of linear feet, measured to the nearest half foot, of drilling performed to clear obstructions for installation of the pipe pile. Predrilling quantities shall be measured as the vertical pile length along which drilling is required for advancement of the pile. No payment or allowance will be made for predrilling which does not meet the agreed upon criteria between the Contractor and the Engineer.

The quantity of rock socket to be measured for payment shall be the number of rock sockets installed to the satisfaction of the Engineer. The rock socket shall include all drilling, removal of materials within the pile, cleaning, installation of anchors, temporary supports, concrete/grout fill, and other hardware required to install the rock sockets. No payment or allowance will be made for rock sockets installed beyond the limits specified.

Payment for pile load testing shall be per test performed. Dynamic pile load testing shall include providing PDA and CAPWAP results for the test pile initial driving, and subsequent restrikes, and results shall be presented in a report for the Engineer's review for each pile tested.
Static compression pile load testing shall include test set up, conducting the testing, and developing a report for the Engineer's review for each pile tested. Lateral pile load testing shall include test set up, conducting the testing, and developing a report for the Engineer's review for each pile tested.

551.07 PRICE TO COVER.

The contract unit price for steel pipe piling and rock sockets shall cover the cost of all labor, materials, plant, equipment, insurance, samples, and incidentals required to furnish and install in full compliance with the requirements of the specifications and drawings. The cost to perform exploratory test pits and to remove any obstructions that may interfere with the installation of the steel pipe piles or rock sockets to the specified elevations will be included in the unit price.

The contract unit price for pile load testing, including dynamic pile load testing, static compression pile load testing, and lateral pile load testing shall be per test performed and reported on, and cover the cost of all labor, materials, plant, equipment, insurance, samples, and incidentals required to complete the tests in full compliance with the requirements of the specifications.

Payment will be made under:

Item No.	Item	Pay Unit
ESCR-551.24.05.C	COATED 24 IN. DIAMETER X 0.5 IN. WALL THICKNESS STEEL PIPE PILE	L.F.
ESCR-551.24.05.CT	COATED 24 IN. DIAMETER X 0.5 IN. WALL THICKNESS STEEL PIPE PILE INSTALLED IN TIMBER CRIBBING	L.F.

ESCR-551.24.05.CJG	COATED 24 IN. DIAMETER X 0.5 IN. WALL THICKNESS STEEL PIPE PILE PLACED IN THE JET GROUT COLUMN	L.F.
ESCR-551.24.75.C	COATED 24 IN. DIAMETER X 0.75 IN. WALL THICKNESS STEEL PIPE PILE	L.F.
ESCR-551.30.01.C	COATED 30 IN. DIAMETER X 1.0 IN. WALL THICKNESS STEEL PIPE PILE	L.F.
ESCR-551.30.01.CJG	COATED 30 IN. DIAMETER X 1.0 IN. WALL THICKNESS PIPE PILES PLACED IN THE JET GROUT COLUMN	L.F.
ESCR-551.30.01 RS	ROCK SOCKET FOR 30 IN. DIAMETER X 1.0 IN. WALL THICKNESS STEEL PIPE PILE	EACH
ESCR-551.36.05.C	COATED 36 IN. DIAMETER X 0.5 IN. WALL THICKNESS STEEL PIPE PILE	L.F.
ESCR-551.36.05.CS	COATED 36 IN. DIAMETER X 0.5 IN. WALL THICKNESS STEEL PIPE PILE WITH INTERLOCK SEALANT INSTALLED	L.F.
ESCR-551.36.05.CD	COATED 36 IN. DIAMETER X 0.5 IN. WALL THICKNESS STEEL PIPE PILE INSTALLED IN PREDRILLED LOCATIONS	L.F.
ESCR-551.36.05.CSD	COATED 36 IN. DIAMETER X 0.5 IN. WALL THICKNESS STEEL PIPE PILE WITH INTERLOCK SEALANT INSTALLED IN PREDRILLED LOCATIONS	L.F.
ESCR-551.36.05 RS	ROCK SOCKET FOR 36 IN. DIAMETER X 0.5 IN. WALL THICKNESS STEEL PIPE PILE	EACH
ESCR-551.24.05.CD	COATED 24 IN. DIAMETER X 0.5 IN. WALL THICKNESS STEEL PIPE PILE INSTALLED IN PREDRILLED LOCATION	L.F.
ESCR-551.42.06	42 IN. DIAMETER X 0.625 IN. WALL THICKNESS STEEL PIPE PILE	L.F.
ESCR-551.42.06.D	42 IN. DIAMETER X 0.625 IN. WALL THICKNESS STEEL PIPE PILE INSTALLED IN PREDRILLED LOCATIONS	L.F.
ESCR-551.24.05 DT	24 IN. DIAMETER X 0.5 IN. WALL THICKNESS STEEL PIPE PILE – DYNAMIC PILE LOAD TESTING	PER TEST
ESCR-551.24.75 DT	24 IN. DIAMETER X 0.75 IN. WALL THICKNESS STEEL PIPE PILE – DYNAMIC PILE LOAD TESTING	PER TEST
ESCR-551.24.05 ST	24 IN. DIAMETER X 0.5 IN. WALL THICKNESS STEEL PIPE PILE – STATIC COMPRESSION TESTING	PER TEST
ESCR-551.30.01 DT	30 IN. DIAMETER X 1.0 IN. WALL THICKNESS STEEL PIPE PILE – DYNAMIC LOAD TESTING	PER TEST
ESCR-551.24.05 LT	24 IN. DIAMETER X 0.5 IN. WALL THICKNESS STEEL PIPE PILE – LATERAL PILE LOAD TESTING	PER TEST
ESCR-551.30.1 ST	30 IN. DIAMETER X 1.0 IN. WALL THICKNESS STEEL PIPE PILE – STATIC COMPRESSION TESTING	PER TEST

ESCR-551.30.1 LT	30 IN. DIAMETER X 1.0 IN. WALL THICKNESS STEEL PIPE PILE – LATERAL PILE LOAD TESTING	PER TEST
ESCR-551.36.05 DT	36 IN. DIAMETER X 0.5 IN. WALL THICKNESS STEEL PIPE PILE – DYNAMIC LOAD TESTING	PER TEST
CR-551.36.05 LT	36 IN. DIAMETER X 0.5 IN. WALL THICKNESS STEEL PIPE PILE – LATERAL PILE LOAD TESTING	PER TEST
ESCR-551.42.05 DT	42 IN. DIAMETER X 0.5 IN. WALL THICKNESS STEEL PIPE PILE – DYNAMIC PILE LOAD TESTING	PER TEST

END OF SECTION

SECTION ESCR-551.993 – MICROPILES

551.993.01 INTENT.

This section describes micropiles for use in the flood protection structures.

551.993.02 DESCRIPTION.

Micropiles, under this section, shall refer to all micropiles used for the floodwall, floodgate, interceptor gate and parallel conveyance structures.

551.993.03 MATERIALS.

(A) Drill Casing. Provide drill casing consisting of flush joint type steel pipe of appropriate thickness to withstand the stresses associated with advancing it into the ground, in addition to the stresses due to hydrostatic and earth pressures.

(B) Drill Casing/Pipe used as Reinforcement. Provide steel drill casing/pipe used as reinforcement conforming to API 5CT N80 steel with 80 ksi yield strength. Mill secondaries cannot be used for reinforcement.

(C) Bar Reinforcement. Provide bar reinforcement meeting the requirements of ASTM A615, Grade 80, or continuously threaded "uncoated high-strength steel bars for prestressing concrete" - ASTM A722.

(D) Casing shall be flush joint and the pipe joint shall be completely shouldered and with no stripped threads.

(E) Grout. Provide a pumpable grout consisting of, as a minimum, Portland Cement - type 2 and water that provides a stable, homogenous neat cement grout with a minimum 28-day unconfined compressive strength of 5,000 psi.

(F) Centralizers and Spacers. Provide centralizers and spacers fabricated from schedule 40 PVC pipe, tube, steel, or material non-detrimental to the reinforcing steel. Wood shall not be used.

551.993.04 SUBMITTALS

(A) Shop Drawings

Prepare and submit to the Engineer, for review and approval, working drawings and relevant calculations for micropile installation at least 21 days prior to planned start of construction.

(B) Submit a detailed description of the construction procedures proposed for use. This shall include a schedule of major equipment resources. Indicate methods and equipment that will be used to containerize waste, including but not limited to soil cuttings, spoils, and drilling fluid, generated as part of the micropiles installation. The construction procedures shall be submitted for Engineer review and approval prior to the start of any work.

(C) The working drawings shall include micropile installation details giving the following:

a. Micropile number, location and installation sequence.

b. Micropile design load.

c. Type and size of reinforcing steel.

d. Minimum total bond length.

e. Grout volumes and maximum pressures.

f. Micropile cut-off elevation.

(D) For reinforcing steel submit certified mill test reports, properly marked, for reinforcing steel, as the materials are delivered. The ultimate strength, yield strength, elongation, and composition shall be included. For steel pipe used as permanent casing, or core steel, submit a minimum of two representative coupon tests or mill certifications (if available) on each steel heat delivered to the project site.

(E) Submit the grout mix designs, including details of all materials to be incorporated, and the procedure for mixing and placing the grout to Engineer for review and approval prior to ordering any materials. This submittal shall include certified test results verifying the acceptability of the proposed mix designs.

(F) Installation Records: The following records shall be prepared for each micropile installed, within 24 hours after each pile installation is completed. The records shall include the following minimum information:

a. Pile drilling duration and observations (e.g., flush return).

b. Information on soil and rock encountered, including description of strata, water, etc.

c. Final elevation of micropile including top and bottom of bond length.

d. Cut-off elevation.

e. Design loads.

f. Description of unusual installation behavior, or conditions.

g. Any deviation from the intended parameters.

h. Grout pressure attained, where applicable.

i. Grout quantities pumped.

j. Pile materials and dimensions.

k. Micropile test records, analysis, and details.

(G) Pile Load Test Procedure and Set-Up

Submit the proposed set-up plan and procedure for performing the required static compression pile load tests and static uplift pile load tests, for review and approval by the Engineer prior to starting any tests. The proposed location of the test piles is indicated on the Drawings.

Test Reports

Provide pile load test results for both compression and tension load tests as required in this section of the Specifications.

(H) As-built drawings showing the location of the piles, their depth and inclination, and details of their composition shall be submitted within 15 days after installation of all production piles.

551.993.05 METHODS.

(A) DRILLING AND EXCAVATION

Protect existing structures, including overhead and buried utility lines. Contractor shall perform exploratory test pits in the area of the proposed micropile installation as required to first expose any buried utilities prior to any drilling at no additional cost to the City.

The Contractor shall follow the requirements in Con Ed Specification CE-SI-1080 Guidelines for Protecting Existing Underground Transmission Electric Facilities from Nearby Construction Activities for any micropiles being installed adjacent to Con Ed electric facilities.

Advance the hole using a duplex drilling method. Do not drill or flush ahead of the drill casing by more than 1 foot. Perform drilling and excavation in such a manner to prevent collapse of the hole. Use of bentonite slurry is not permitted. Use of polymer slurry to remove cuttings from the cased hole shall be approved by the Engineer.

If obstructions are encountered during excavation for a pile, progress through them by means of coring or a tri-cone roller bit. Use of drop-type impact hammers and blasting are not permitted.

Use of a down-the-hole hammer must be approved by the Engineer.

Control the procedures and operations so as to prevent mining, damage, or settlement to adjacent structures, tunnels, utilities, or adjacent ground. If any mining, damage, or settlement occurs, halt operations. Provide a written plan to the Engineer for review with procedures to avoid reoccurrence. Resume work only after the Engineer has approved the plan in writing. Repair all damage and settlement at no additional cost to the City.

Control the procedures and operations so as to prevent the soil at the bottom of the hole from flowing into the hole at all times during installation and cleaning out. Monitor the rate of fluid flow used to progress the holes.

Control drilling fluid and dispose of spoil in accordance with the approved procedure.

Do not progress a hole, pressure-grout, or post-grout, within a radius of 5 pile diameters or 5 feet, whichever is greater, of a micropile until the grout for that micropile has set for 24 hours or longer if a retarder is used.

Obstructions, including but not limited to rock fragments, cobbles, boulders, and rubble fill are expected during installation of micropiles. It is Contractor's responsibility to assess the impact of obstructions on micropile installation and take measures to overcome the obstructions without causing additional cost to the City.

If, during installation of a pile, an obstruction is encountered that prevents the practical advancement of the hole, the hole shall be abandoned and filled with grout. A new pile shall be drilled at a location to be determined by the Engineer, although it must be acknowledged that in certain structures, relocation options may be severely limited, and further attempts at the original location with different methods may be required.

Existing utilities shall be field verified prior to drilling. The Contractor shall expose all existing utilities prior to installation of micropiles. It is the Contractor’s

responsibility to avoid damaging existing underground utilities during micropile installation.

The micropiles shall be constructed according to the size and depth shown on the Contract Drawings. Casing shall be drilled down to the level/elevation in the sand layer or top of bedrock as indicated on the Contract Drawings.

(B) REINFORCEMENT AND POST GROUT TUBE PLACEMENT

Provide centralizers sized to position the reinforcement within 3/8 inch of plan location from the center of the pile; sized to allow grout tremie pipe insertion to the bottom of the drillhole; and sized to allow grout to freely flow up the drill hole and casing and between adjacent reinforcing bars. Centralizers, spaced not to exceed 10 feet, must be used to center the reinforcement for its entire length. Securely attach the centralizers to withstand installation stresses. Do not drop, but lower the steel reinforcement to its specified location in the hole. If a post grout tube is used, attach it to the steel reinforcement prior to lowering it.

(C) GROUTING

The Contractor shall provide systems and equipment to measure the grout quality, quantity, and pumping pressure during the grouting operations. This information is to be measured and recorded by the Contractor. The grouting shall be performed immediately after the finish of drilling and flushing of the hole. No drilling of one micropile shall be performed if grouting is not expected to be finished for the same micropile immediately after drilling.

After drilling, the hole shall be flushed with water and/or air to remove drill cuttings and/or other loose debris. All drilling fluid along with cuttings and debris shall be collected in containers for future disposal. Prior to placement of grout, the Contractor shall verify that the bottom of the pile is clean and has reached the required tip elevation and that the bond length in soil or rock as shown in the Drawings has been achieved. The grout shall not contain lumps or any other evidence of poor or incomplete mixing. Admixtures, if used, shall be mixed in accordance with manufacturer's recommendations. The pump shall be equipped with a pressure gauge to monitor grout pressures. The pressure gauge shall be capable of measuring pressures of at least 150 psi or twice the actual grout pressures used by the Contractor, whichever is greater. The grouting equipment shall be sized to enable the grout to be pumped in one continuous operation. The grout should be kept in constant agitation prior to pumping.

The grout shall be injected from the lowest point of the drill hole (by tremie methods) until clean, pure grout flows from the top of the micropile. The tremie grout may be pumped through grout tubes or drill rods. Subsequent to tremie grouting, all grouting operations associated with, for example, extraction of drill casing and pressure grouting, must ensure complete continuity of the grout column. The use of compressed air to directly pressurize the fluid grout is not permissible. The grout pressures and grout takes shall be controlled to prevent excessive heave in cohesive soils or fracturing of soil or rock formations. The entire pile shall be grouted to the design cut-off level.

Upon completion of grouting, the grout tube may remain in the hole, but it shall be filled with grout. Grout tubes shall be installed prior to the tremie grouting.

The Contractor shall perform grouting in a way to minimize grout loss to joints in rock and cavities. The Contractor shall be responsible for any overrun of grout beyond the theoretical micropile volume and take it into consideration in their bid. In case the grout does not return to the top of casing after 120 percent of theoretical grout volume for this pile has been consumed, the Contractor may let the grout set and redrill and regrout the micropile. However, it shall be the Contractor's responsibility to deal with the potential grout loss issue.

Grout within the micropiles shall be allowed to attain the minimum design strength prior to being loaded. No load test shall be performed before the specified grout strength has been reached.

If the Contractor uses a post-grouting system, all relevant details including grouting pressure, volume, location and mix design, shall be submitted for Engineer approval.

(D) PILE SPLICES

Casing sections shall be joined by manufactured thread joints constructed to develop at least the required compressive, tensile, and/or bending structural strength used in the micropile design. Threaded pipe casing joints shall be located at least two casing diameters (OD) from a splice in any reinforcing bar.

Reinforcing steel shall be spliced using approved couplers from the reinforcing steel manufacturer and shall develop the ultimate tensile strength of the bars without evidence of any failure.

Lengths of casing and reinforcing steel to be spliced shall be secured in proper alignments and in such a manner that no eccentricity between the axes of the two lengths spliced or angle between them results.

(E) GROUT PLACEMENT AND CASING REMOVAL

Provide quality control of the mix by monitoring grout quality. Measure grout consistency by determining grout density per API Recommended Practice (RP) 13B-1 by the Baroid Mud Balance Test at a frequency, of at least one test per micropile, and provide the information to the inspector.

The Engineer will perform quality assurance of the mix design. Place grout by means of a tremie pipe from the bottom of the pile upward. Record the initial volume of grout required to fill the hole. Record grouting pressure and volume of grout being pumped into the pile during pressure grouting. Upon completion, maintain the grout level at or above the pile cut off elevation until the grout has set.

Locate the grout pressure and volume measuring gages at the pile installation site so that they are accessible and legible to the inspector.

(F) CONSTRUCTION TOLERANCES

Install the piles so that the center of each micropile does not vary from the plan location by more than 3 inches. Do not allow the micropile to vary from the vertical or established batter by more than 1/4 inch per foot, as measured above ground.

Cut off the top of the pile at the elevation indicated in the Contract Documents.

(G) PILE ACCEPTANCE CRITERIA

Piles will not be accepted for payment unless all the following criteria are satisfied:

1. Pile meets the following construction tolerance criteria:
    a. Centerline of piling shall not be more than 3 inches from indicated plan location.
    b. Pile-hole alignment shall be within 1 percent of design alignment.
    c. Top elevation of pile shall be within 1 inch of the design vertical elevation.
    d. Centerline of core reinforcement shall not be more than 3/4 inch from centerline of piling.
2. Pile was installed in accordance with the approved submittal.
3. Pile is not damaged.
4. Pile was installed using the same method, grout volumes, and pressures as the accepted test pile, if applicable.

(H) UNACCEPTABLE PILES

Unacceptable piles are piles which do not meet the acceptance criteria identified in the subsection above.

Submit to the Engineer a written plan of remedial action, for approval by the Engineer, showing how to correct the problem and prevent its reoccurrence. Repair, augment, or replace the unacceptable pile in accordance with the approved remedial plan at no additional cost to the City.

(I) QUALITY ASSURANCE

The Contractor shall be fully experienced in all aspects of micropile design and construction, and shall furnish all necessary equipment, materials, skilled labor, and supervision to carry out the contract. The Contractor shall have successfully completed at least three projects in the previous 5 years of similar scope and size. The Contractor shall have successfully installed a minimum of 100 micropiles in similar sites, of similar capacity to those required in the plans and specifications. The Contractor shall also provide resumes of key personnel who will be present on site (and will be materially involved) and who each have at least 3 years of relevant experience. These personnel shall include as a minimum a superintendent and a driller. The Engineer may suspend the Work if the Contractor uses non-approved personnel. If work is suspended, the Contractor shall be fully liable for all resulting costs and no adjustment in contract time will result from the suspension.

Grout shall be tested as follows:

1. Each set of grout samples shall consist of three 2-inch cube samples.
2. During test pile installation, prepare and test minimum one set of samples from grout used for each test pile. Perform one 3-day, 7-day, and one 28-day unconfined compressive strength tests in accordance with ASTM C780 Annex 6.

3. During production pile installation, prepare and test a minimum of one set of samples from each batch of grout used during production pile installation, but no less than one set per day. Perform one 7-day and one 28-day unconfined compressive strength tests per ASTM C780 Annex. The remaining sample shall be tested at 56-day if 28-day strength does not meet specifications.
4. Test results shall be submitted to the Engineer within 3 days from the finish the grout strength test. If the grout strength of a particular micropile is less than the specified strength, the Engineer may require the Contractor to prove the design capacity of the specific micropile by performing additional proof load test or to install additional micropile to replace the specific micropile with inadequate grout strength at no additional cost to the City.

(J) WELDING

All welded connections shall be performed by in accordance with AWS D1.1. These requirements do not apply to minor welding that does not carry structural load, such as cutting teeth and tacking on bearing plates.

(K) PILE LOAD TESTING

Follow the pile load testing requirements and locations specified on the Contract Drawings.

The proposed locations of the test piles are indicated on the Contract Drawings. Static compression pile load tests shall be performed on those test piles in accordance with ASTM D1143 following New York City Building Code, and as indicated on the Contract Drawings. Piles shall be tested to a load 200% of the allowable compression pile capacity provided on the Contract Drawings, using the Standard Procedure.

Static tension pile load tests shall be performed on those test piles in accordance with ASTM D3689 following New York City Building Code, and as indicated on the Contract Drawings. Piles shall be tested to a load 200% of the allowable compression pile capacity provided on the Contract Drawings, using the Standard Procedure.

The Contractor shall retain the services of a New York State Licensed Professional Engineer to perform load tests on the micropiles at the locations shown in the Contract Documents.

A test report, in accordance with ASTM D1143, shall be submitted for each compression pile load test. A test report, in accordance with ASTM D3689, shall be submitted for each tension pile load test.

(L) VIBRATION MONITORING

Follow the vibration monitoring requirements specified on the Contract Drawings, and stated herein.

Where installing micropiles adjacent to critical structures, generated vibrations shall be monitored at the critical structures. Detected vibration levels at the monitored structures shall not exceed a peek particle velocity level greater than 0.5 in./sec.

551.993.06 MEASUREMENT.

The quantity of micropiles to be measured for payment shall be the linear feet, measured to the nearest half foot, installed to the satisfaction of the Engineer. No payment or allowance will be made for micropiles installed beyond the limits specified.

Payment for static compression and tension pile load testing shall be per test performed. Static compression pile load testing shall include test set up, conducting the testing, and developing a report for the Engineer's review for each pile tested.

551.993.07 PRICE TO COVER.

The contract unit price for micropiles shall cover the cost of all labor, materials, plant, equipment, insurance, samples, and incidentals required to furnish, and install in full compliance with the requirements of the specifications and drawings. The cost of vibration monitoring, exploratory test pits to locate utilities, any loss of grout, and the removal of any obstructions that may interfere with the installation of the micropiles to the specified elevations will be included in the unit price. The contract unit price for pile load testing, both compression and tension, shall be per test performed and reported on, and cover the cost of all labor, materials, plant, equipment, insurance, samples, and incidentals required to complete the tests in full compliance with the requirements of the specifications.

Payment will be made under:

Item No.	Item	Pay Unit
ESCR-551.993.9625	9.625 IN. O.D. X 0.5 IN. WALL THICKNESS MICROPILE	L.F.
ESCR-551.993.9625C	PILE LOAD TESTING FOR 9.625 IN. O.D. X 0.54 IN. WALL THICKNESS MICROPILE – STATIC COMPRESSION TEST	PER TEST
ESCR-551.993.9625T	PILE LOAD TESTING FOR 9.625 IN. O.D. X 0.54 IN. WALL THICKNESS MICROPILE – STATIC TENSION TEST	PER TEST
ESCR-551.993.1200	INSTALLED MICROPILE (12 IN O.D.)	L.F.
ESCR-551-993.1800	INSTALLED MICROPILE (18 IN O.D.)	L.F.
ESCR-551.993.1200C	PILE LOAD TESTING FOR 12 IN. O.D. MICROPILE - STATIC COMPRESSION TEST	PER TEST
ESCR-551.993.1800C	PILE LOAD TESTING FOR 18 IN. O.D. MICROPILE – STATIC COMPRESSION TEST	PER TEST

END OF SECTION

SECTION ESCR-552 – STEEL SHEET PILING

552.01 INTENT.

This section describes steel sheet piling for use in the flood protection, cut-off wall, and combi-wall structures.

552.02 DESCRIPTION.

Steel sheet piling, under this section, shall refer to all permanent steel sheet piling used for the floodwall, floodgate foundations, and cut-off wall.

552.03 MATERIALS.

(A) All sheet piles and king piles shall be delivered in single pieces. The interlocks of sheet piling and king piles shall be free-sliding, provide a swing angle suitable for the intended installation, but not more than 5 degrees when interlocked, and maintain continuous interlocking when installed. Sheet piling and king piles shall be sections of the dimensions shown on the Contract documents. Sheet piling and king piles shall be provided with standard pulling holes. The outboard face of sheet piling and king piles shall be fully coated in the shop per requirements of these Specification, and touched up in the field as required prior to, during and after driving.

The Contract Documents refer to AZ steel sheet pile sections manufactured by Nucor Skyline. The steel sheet pile sections listed below the respective AZ-section(s) shall be considered equivalent to the AZ-section:

AZ 20-700N (Nucor Skyline)

- ZZ 20-700 (JD Fields)
- PZC 25 (LB Foster)
- Or approved equal.

AZ 26-700N (Nucor Skyline)

- ZZ 26-700 (JD Fields)
- PZC 28 (LB Foster)
- Or approved equal.

AZ 38-700N (Nucor Skyline)

- ZZ 38-700 (JD Fields)
- PZC 38CP (LB Foster)
- Or approved equal.

AZ 46-700N (Nucor Skyline)

- ZZ 46-700 (JD Fields)
- SLC 46-700 (Meever USA)
- Or approved equal.

NZ 19 (Nucor Skyline)

- ZZ 19-700 (JD Fields)
- PZC 19 (LB Foster)

- Or approved equal.

Any changes to other elements of the design that may result from the use of these equivalent sections shall be at no additional cost to the City.

(B) Steel sheet piling for the buried inland floodwall and deadman (excluding I-wall) shall be ASTM A572, Grade 50.

(C) Steel sheet piling (AZ-46-700N or equivalent) for the I-wall floodwall shall be ASTM A572, Grade 60.

(D) Steel sheet piling for the cut-off wall and combi-wall shall be ASTM A572, Grade 60.

(E) Pipe piles for the combi-wall must be ASTM A252 Grade 3 Modified with F_y = 50ksi.

(F) Tie rods for the cut-off wall anchoring system shall be ASTM 615, 75 ksi threaded bar hot-dip galvanized in accordance with ASTM A153.

(G) Steel bearing plate, articulating couplers, and turnbuckles for the tie rods shall be galvanized and provided by the same manufacturer as the tie rod.

(H) Coating for the steel sheet piling must be in accordance with specification Section ESCR-559 Protective Coating for Waterfront Structures.

(I) Interlock sealant, where specified on the drawings, shall be a coal-tar resistant sealant suitable for sealing against water and applied in the factory. Interlock sealant shall be approved by the Engineer and the NYSDEC.

552.04 SUBMITTALS

(A) PRODUCT DATA

Equipment Descriptions

Complete descriptions of sheet piling driving equipment including hammers, extractors, protection caps, and other installation appurtenances shall be submitted for approval prior to commencement of work.

Protective Coating Systems

Manufacturer's specifications, recommended installation procedures and equipment, Materials Safety Data Sheets (MSDS) and other pertinent data needed to prove compliance with the specified requirements.

Tools for mixing and application, as approved by the manufacturer of the coating system supplier.

Manufacturer's instruction for field touch-up of damaged coating.

Interlock Sealant

Manufacturer's specifications, recommended installation procedures and equipment, Materials Safety Data Sheets (MSDS) and other pertinent data needed to prove compliance with the specified requirements.

(B) SHOP DRAWINGS

Drawings for sheet piling shall show complete piling dimensions and details, driving sequence, and location of installed piling. Detail drawings shall include details and dimensions of templates and other temporary guide structures for

installing piling, as well as all appurtenances and temporary supports for the tie rods. Detail drawings shall provide details of the method of handling piling to prevent permanent deformation, overstress, and damage to coatings and piling interlocks.

(C) DESIGN DATA

Submit welding procedures (PQR / WPS) for approval.

(D) CERTIFICATES

- Welder's Qualifications (WPQ): Certificate stating that all coating materials and procedures meet or exceed the specified requirements of this Section.
- Field Test Results for Coating
- Material Mill Certificates

(E) RECORDS

Driving Records

Records of the sheet piling driving operations shall be submitted no later than 7 days after driving is completed. These records shall provide a system of identification which shows the disposition of approved piling in the work, driving equipment performance data, piling penetration rate data, piling dimensions, and top and bottom elevations of installed piling.

Record Drawings

Provide in AutoCAD format with location and tip elevations.

Pulling and Redriving

Provide records of all sheet piles that have been pulled or redriven.

(F) Contractor's Work Plan

Contractor shall submit a detailed work plan for driving all piles to Engineer for approval. It shall include procedures, equipment and personnel to be used, schedule and sequencing, and a general narrative of the proposed work and plan.

(G) Engineer's Reports

The Contractor shall submit the proposed driving hammer(s) and a report prepared by a New York State licensed Professional Engineer, including WEAP analysis, that shows the hammer is adequate to install the piles and will not damage the piles during driving.

552.05 METHODS.

(A) SITE PREPARATION

Protect existing structures, including overhead and buried utility lines, during installation of sheet piles. Contractor shall perform exploratory test pits in the area of the proposed sheet pile installation to first expose any buried utilities prior to any sheet pile installation at no additional cost to the City.

The Contractor shall follow the requirements in Con Ed Specification CE-SI-1080 Guidelines for Protecting Existing Underground Transmission Electric Facilities from Nearby Construction Activities for any sheet pile installation adjacent to Con Ed electric facilities.

(B) PILE DRIVING EQUIPMENT (NON-PRESS-IN METHOD)

Where a press-in method of installation is not specified, the sheet piles shall be installed using an approved driving head designed to properly fit a pair of piles. Avoid damage to the top of the piles during driving.

Use an approved impact or vibratory pile hammer of sufficient size to drive the sheet piles to the tip elevation(s) shown on the Contract Drawings without causing stresses due to driving in excess of 90 percent of the yield strength (Fy) of the pile material, verified based on Wave Equation Analyses (WEAP Analyses) performed by the Contractor.

(C) PILE DRIVING EQUIPMENT (PRESS-IN METHOD)

Where specified on the drawings, the steel sheet piles shall be hydraulically pressed-in and extracted utilizing a non-vibratory, non-percussive hydraulic press-in methodology.

The hydraulic press-in equipment shall not produce more than 70dB of noise at a distance of 25 feet from the equipment while in operation. During pile installation, the hydraulic press-in equipment shall not produce any measurable vibration at the ground surface at a distance of 15 feet.

(D) WELDING AND SPLICING

Perform welding in accordance with requirements for shielded metal arc welding of AWS D1.1 for buildings and other structures.

Reinforce pile tips if and as shown on the Contract Drawings.

Splicing of sheet piles is only permitted where there is limited headroom for the pile-installation equipment, such as under the FDR Drive viaduct, or as directed by the Engineer. All pile splices shall be full penetration butt welds with cover plates and shall develop the full strength of the sheet pile. An approved jig or alignment device shall be used to maintain the required straightness of the sheet pile. All splices shall be non-destructively tested by an AWS Certified Welding Inspector (CWI) using both VT and UT for the 100 percent of the weld length.

All protective coating must be repaired after welding is completed.

(E) WELDING OF HEADED SHEAR STUDS ON SHEET PILES

Headed shear studs shall be welded to the sheet piles at the locations indicated on the Contract Drawings, and as directed by the Engineer. The studs shall be installed on site, following sheet pile installation. The sheet piles shall not be coated in the immediate area surrounding the shear studs, or the coating shall be removed prior to stud installation.
The headed shear studs shall be of the size indicated on the Contract Drawings. They shall not be coated. They shall be Nelson Type H4L or S3L, or approved equal, flux filled, welded as shown on the Drawings. Studs shall be from cold drawn steel Grades C-1010 through C-1020, per ASTM A108, and shall be welded per the manufacturer’s recommendations. The minimum ultimate tensile strength shall be 60 ksi, and the minimum yield strength shall be 50 ksi.

(F) COATING OF PILES

Piles shall be coated in accordance with Section ESCR-559 – Protective Coating for Waterfront Structures to the extents specified on the Contract Drawings.

(G) ALIGNMENT OF PILING

Contractor shall furnish necessary surveying services for establishing sheet piling locations. Any sheet piles driven more than 2 in. from the location indicated on the Contract Drawings will not be acceptable.
Sheet piling shall be driven plumb. For permanent work, deviation from the plumb position of more than one-eighth inch per foot shall be cause for rejection.
Contractor shall provide suitable guide structures to ensure that piles and driving equipment are properly aligned during driving. Guide structures shall be equipped with suitable devices to avoid damaging protecting coatings of pilings.
If, at any time, the piling is found to be out of plumb in the plane of the wall, the Contractor shall provide tapered piles or take other corrective measures to ensure plumbness of the succeeding.

(H) PILE DRIVING

Use an approved guide frame or template to set sheet piles in proper position and alignment and to provide adequate lateral support to maintain vertical alignment during driving. Where field conditions require, use two levels of guide wales to maintain vertical alignment during driving.

Properly set and "shake out" steel sheet piles prior to driving. Place a pair of sheets within their interlocks; then lower them as far as possible. If the sheets bind or hang up in their interlocks before bearing on the ground, pick up adjacent sheets in pairs and shake out as required, until the sheets ride smoothly within their interlocks and simultaneously bear on the ground.

Top of sheet pile shall be normal to the driving force.

Drive sheet piles to the tip elevation(s) shown on the Contract Drawings. Drive sheet piles in segments to assure final sheet pile location are installed in the intended locations.

Drive sheet piles in such a manner as to prevent piles from leaning in the direction of driving and to provide a continuous closure of sheet piles, where closure is required. Where possible, drive sheet piling with the ball end leading. If an open socket is leading, provide a bolt or similar object in the bottom of the interlock to keep interlock free of soil material.

At the completion of the driving operation on a pile, verify that the pile is undamaged, free of defects and in compliance with the requirements of this Section.

Cut piles off at cut-off elevation as shown on the Contract Drawings as soon as practical after driving.

Obstructions encountered during driving shall be removed or the Contractor may penetrate the obstruction by pre-drilling, pre-augering, spudding or other means.

No jetting will be permitted without specific approval of the Engineer.

(I) ROCK SOCKETS

Rock sockets for the combi-wall king piles shall be installed as shown on the Contract Drawings.

Pipe Pile Installation

The Contractor shall choose such means as necessary to seal the pipe piles onto or into the rock. The Contractor may use impact, vibratory, or drilling methods, or any combination of these, as the Contractor deems necessary, to produce the finished pipe pile as shown on the Drawings. Blasting is prohibited, and no means shall be employed which disturb existing construction.

The socket shall be cut into the rock, and the bottom of the socket shall be level so that horizontal bearing is achieved. The diameter and depth of the socket shall be shown on the Contract Drawings. The diameter of the socket specified shall be maintained the entire length of the socket. The Engineer may direct the Contractor to cut the socket deeper than specified, if in the Engineer's opinion, this becomes necessary.

Concrete Grout

Concrete/grout 28-day compressive strength shall be as shown on the Contract Drawings.

Concrete/grout shall be tremied or pumped in a continuous operation. If the placement is interrupted, special procedures may be required prior to resumption of the pour, as directed by the Engineer.

Concrete/grout may be placed underwater by pumping, or by the tremie method.

The bottom of the socket shall be sounded and the depth determined immediately before concrete placement. Not more than ½-inch of soil residue shall be permitted at the bottom of the socket.

If the soil or any other material persists in entering the drilled socket, the socket may be grouted, the grout allowed to harden, and the socket re-drilled.

The tremie pipe or grout pipe shall extend to within six (6) in. of the bottom of the socket. The pipe shall remain a minimum of six (6) ft below the top of the concrete at all times after attaining that depth.

The tremie operation shall continue until a minimum of one-third of a cubic yard of concrete is pumped over the top of the required concrete top.

(J) CORRECTIONS OF DEFICIENCIES

Notify the Engineer immediately in writing of the failure of any sheet pile to meet any requirement of this Section. Such written notification shall include all information required for the evaluation of remedial measures.

Perform remedial work at no additional cost to the City and in accordance with both the applicable Unit Price provisions, if any, and the modified design and details, if any, all as approved by the Engineer, except for sheet piles which do not comply with the requirements of this Section due to encountering during driving any underground obstruction consisting of a boulder or piece of manufactured or construction material as shown by the Contractor, and as determined by the Engineer on the basis of all field information.

(K) PRE-DRILLING

Pre-drilling or pre-augering for installation of pipe piles or sheet piles shall be performed to clear obstructions and remove portions of existing historic structures to allow for installation of sheet piles and combi-walls to the specified tip elevation as shown on the Contract Drawings.

Waterfront Cut-off Wall (Combi-Wall)

Where indicated in the Contract Drawings, the Contractor shall drill through obstructions, including those caused by the timber piles of the existing waterfront retaining structure to allow for installation of the proposed sheet pile and combi-wall elements. The Contractor shall choose such means as necessary to clear obstruction of existing timber batter pile(s) to allow for installation of proposed cut-off wall. The Contractor may use impact, vibratory, or drilling methods, or any combination of these, as the Contractor deems necessary, to advance the pipe piles to the specified tip elevation as indicated on the Drawings.

Prior to commencement of pile installation, the Contractor and the Engineer must mutually agree on the pre-drilling.

Floodwall Foundation (Sheet Pile)

As indicated in the Contract Drawings, historic bulkhead structures may be located below the alignment of the proposed floodwall within East River Park. Where installation of proposed sheet pile foundations requires, the Contractor shall remove portions of the existing structure through pre-drilling. The Contractor shall choose such means as necessary to remove the existing timber cribbing within East River Park along the proposed floodwall alignment to allow for installation of the proposed sheet piles foundations. The Contractor may use impact, vibratory, or drilling methods, or any combination of these, as the Contractor deems necessary, to allow for the advancement of the sheet piles to the specified tip elevation as indicated on the Drawings. The Contractor shall create a clearing with a minimum width of 30 in. through the existing cribbing. The Contractor shall fill the pre-drilled area with pea gravel, to be approved by the Engineer, prior to installation of the sheet piles. For work areas adjacent to or within the FDR Drive roadway, the Contractor’s proposed methodology for pre-drilling shall accommodate requirements for work periods and roadway closures/openings as dictated by NYCDOT OCMC.

552.06 MEASUREMENT.

The quantity of steel sheet piling to be measured for payment shall be the number of square feet, measured to the nearest square foot, installed to the satisfaction of the Engineer. The horizontal length will be measured along the centerline of the sheeting wall. The vertical height shall be the sheetpile length measured from the final cut-off elevation to sheetpile tip elevation. No payment or allowance will be made for steel sheet piling installed beyond the limits specified.

The quantity of combi-wall to be measured for payment shall be the number of square feet, measured to the nearest square foot, installed to the satisfaction of the Engineer. The horizontal length will be measured along a projection of the sheeting on a plane parallel to and midway between the front and rear face of the combi-wall. No payment or allowance will be made for steel sheet piling installed beyond the limits specified.

The quantity of steel sheet piling and combi-wall installed in predrilled locations to be measured for payment shall be the number of square feet, measured to the nearest square foot, of drilling performed to clear obstructions for installation of the element. Predrilling quantities shall be measured as the vertical length of pile or sheet pile along which drilling is required for advancement of the pile or sheet pile by the horizontal length of the pile or sheet pile. No payment or allowance will be made for predrilling which does not meet the agreed upon criteria between the Contractor and the Engineer.

The quantity of tie rod to be measured for payment shall be the number of linear feet, measured to the nearest tenth of a foot, installed to the satisfaction of the Engineer. The quantity of tie rod shall include any articulated couplers, nuts, bearing plates, turnbuckles, temporary supports, and other hardware required to install the tie rods. No payment of allowance will be made for steel sheet piling installed placed beyond the limits specified.

The quantity of rock socket to be measured for payment shall be the number of rock sockets installed to the satisfaction of the Engineer. The rock socket shall include all drilling, removal of materials within the pile, cleaning, installation of anchors, temporary supports, concrete/grout fill, and other hardware required to install the rock sockets. No payment of allowance will be made for steel sheet piling installed placed beyond the limits specified.

552.07 PRICE TO COVER.

The contract unit price for steel sheet piling shall cover the cost of all labor, materials, plant, equipment, insurance, samples, and incidentals required to furnish, coatings (where specified), and install in full compliance with the requirements of the specifications and drawings. The cost to perform exploratory test pits to locate buried utilities prior to sheet pile installation and remove any obstructions that may interfere with the installation of the sheet piling to the specified elevations will be included in the unit price.

The contract unit price for tie rods shall cover the cost of all labor, materials, articulating couplers, turnbuckles, plant, equipment, insurance, samples, and incidentals required to furnish, galvanize, touch-up, and install in full compliance with the requirements of the specifications and drawings. The unit price for tie rods shall include any articulated couplers, nuts, bearing plates, turnbuckles, temporary supports, and other hardware required to install the tie rods.

The contract unit price for combi-wall shall cover the cost of all labor, materials, plant, equipment, insurance, samples, and incidentals required to furnish, coatings and interlock sealant (where specified), and install in full compliance with the requirements of the specifications and drawings. The cost to perform any investigations to locate buried utilities or potential obstructions prior to combi-wall installation and the removal of any obstructions that may interfere with the installation of the combi-wall to the specified elevations will be included in the unit price.

The contract unit price for rock sockets shall cover the cost of all labor, materials, plant, equipment, insurance, samples, and incidentals required to furnish and install in full compliance with the requirements of the specifications and drawings.

Payment will be made under:

Item No.	Item	Pay Unit
ESCR-552.11 20	BARE AZ-20-700N OR EQUAL STEEL SHEET PILE INSTALLED USING NON-PRESS-IN METHODS	S.F.
ESCR-552.11 20C	COATED AZ-20-700N OR EQUAL STEEL SHEET PILE INSTALLED USING NON-PRESS-IN METHODS	S.F.

Item No.	Item	Pay Unit
ESCR-552.11 20CT	COATED AZ-20-700N OR EQUAL STEEL SHEET PILE INSTALLED IN TIMBER CRIBBING USING NON PRESS-IN METHODS	S.F.
ESCR-552.11 20CB	COATED AZ-20-700N OR EQUAL STEEL SHEET PIPLE INSTALLED IN CONCRETE BULKHEAD USING NON-PRESS-IN METHODS	S.F.
ESCR-552.11 19C	COATED NZ19 OR EQUAL STEEL SHEET PILE INSTALLED USING NON-PRESS IN METHODS	S.F.
ESCR-552.11 46 CP	COATED AZ-46-700N OR EQUAL STEEL SHEET PILE INSTALLED USING THE PRESS-IN METHOD	S.F.
ESCR-552.11 46CPL	COATED AZ-46-700N STEEL SHEET PILE INSTALLED USING THE PRESS-IN METHOD UNDER LOW HEADROOM	S.F.
ESCR-552.11 46CIP	COATED AZ-46-700N STEEL SHEET PILE WITH INTERLOCK SEALANT INSTALLED USING THE PRESS-IN METHOD	S.F.
ESCR-552.11 46.CT	COATED AZ-46-700N STEEL SHEET PILE INSTALLED IN TIMBER CRIBBING USING NON PRESS-IN METHODS	S.F.
ESCR-552.11 46 CS	COATED AZ-46-700N STEEL SHEET PILE WITH INTERLOCK SEALANT INSTALLED USING NON-PRESS-IN METHODS	S.F.
ESCR-552.11 46 CSP	COATED AZ-46-700N STEEL SHEET PILE WITH INTERLOCK SEALANT INSTALLED USING THE PRESS-IN METHOD	S.F.
ESCR-552.11 4219C	COATED PAZ42/NZ19 OR EQUAL COMBI-WALL INSTALLED	S.F.
ESCR-552.11 4219CD	COATED PAZ42/NZ19 OR EQUAL COMBI-WALL INSTALLED IN PREDRILLED LOCATIONS	S.F.
ESCR-552.11 4219CI	COATED PAZ42/NZ19 OR EQUAL COMBI-WALL WITH INTERLOCK SEALANT INSTALLED	S.F.
ESCR-552.11 46CIP	COATED AZ-46-700N OR EQUAL STEEL SHEET PILE WITH INTERLOCK SEALANT INSTALLED USING THE PRESS-IN METHOD	S.F.
ESCR-552.11 46CP	COATED AZ-46-700N OR EQUAL STEEL SHEET PILE INSTALLED USING THE PRESS-IN METHOD	S.F.

Item No.	Item	Pay Unit
ESCR-552.11 46CPL	COATED AZ-46-700N OR EQUAL STEEL SHEET PILE INSTALLED USING THE PRESS-IN METHOD UNDER LOW HEADROOM	S.F.
ESCR-552.11 46CT	COATED AZ-46-700N OR EQUAL STEEL SHEET PILE INSTALLED IN TIMBER CRIBBING USING NON-PRESS-IN METHODS	S.F.
ESCR-552.11 3.0TR	3.0 IN. DIAMETER HOT-DIP GALVANIZED TIE ROD AND ALL APPURTENANCES	L.F.

END OF SECTION

SECTION ESCR-557 – PRECAST CONCRETE SLAB UNITS

557.01 INTENT.

This section describes the casting, furnishing, and installation of the precast concrete slab units for use in the esplanade.

557.02 DESCRIPTION.

The precast concrete slab units, under this section, shall refer to the precast non-prestressed slab units on the esplanade as shown on the Contract Drawings.

557.03 MATERIALS.

(F) The material and fabrication requirements of §704-03 of the NYSDOT Standard Specifications shall apply.

(G) All steel reinforcing shall be epoxy coated or galvanized in accordance with the material requirements of §704-03 of the NYSDOT Standard Specifications.

(H) Concrete shall have a minimum compressive strength of 5,000 psi and include a corrosion inhibitor following the requirements of §711-13 of the NYSDOT Standard Specifications. The corrosion inhibitor shall be used in conjunction with the coated or galvanized reinforcing.

557.04 INSTALLATION.

(D) The Contractor shall use installation equipment which is not bent, twisted, warped or damaged in any way. All wire ropes for cranes of lifting bars shall be of full sections and shall not be bent, kinked, twisted, torn or stretched. The lifting capacity of each lifting device shall be clearly marked.

(E) Prior to erection, and again after installation, precast members shall be checked for damage, such as cracking, spalling, and honeycombing. As directed by the Engineer, precast members that do not meet the surface finish requirements specified herein shall be repaired, or removed and replaced with new precast members.

(F) Precast members shall be erected after the concrete has attained the specified compressive strength, unless otherwise approved by the Engineer. Erect in accordance with the approved shop drawings, PCI MNL-116 and PCI MNL-120 (Chapter 8), for tolerances. Brace precast members, unless design calculations submitted with the shop drawings indicate bracing is not required. Follow the manufacturer's recommendations for maximum construction loads. Place precast members level; plumb, square, and true. Align member ends.

557.05 SURFACE FINISH.

(I) Precast members containing hairline cracks which are visible and are less than 0.02 inches in width, may be accepted, except that cracks larger than 0.005 inches in width for surfaces exposed to the weather shall be repaired. Precast members which contain cracks greater than 0.02 inch in width shall be approved by the Engineer, prior to being repaired. Any precast member that is structurally impaired or contains honeycombed section deep enough to expose reinforcing shall be rejected.

(J) On unformed surfaces, provide a floated finish on formed surfaces. Follow PCI MNL-116 (Appendix A- Commentary), Chapter 3, for grades of surface finishes.

On exposed surfaces, provide a standard grade surface finish. The combined area of acceptable defective areas shall not exceed 0.2 percent of the exposed to view surface area, and the patches shall be indistinguishable from the surrounding surfaces when dry.

557.06 MEASUREMENT.

The quantity to be paid for under this work shall be the number of square yard of plan area of precast concrete slab units installed. Plan area is defined as the area bounded by the outer edges of each precast unit. No deductions will be made for chamfers, shear keys, or notch cuts. Space between the units shall not be included in any measurement.

557.07 PRICE TO COVER.

The contract unit price for precast concrete units shall cover the cost of all labor, materials, plant, equipment, insurance, samples, testing, and incidentals required to furnish and install the precast concrete units as shown on the Contract Drawings, in full compliance with the requirements of the specifications. Damaged units which cannot be satisfactorily repaired or which do not meet dimensional and camber tolerances shall be replaced by the Contractor at no cost to the City.

Payment will be made under:

Item No.	Item	Pay Unit
ESCR-557.44	PRECAST CONCRETE SLAB UNITS	S.Y.

END OF SECTION

SECTION ESCR-559 – PROTECTIVE COATING FOR WATERFRONT STRUCTURES

559.01 INTENT.

Protective coating for use on the esplanade, floodwall, and floodgate foundation sheet piles and piles.

559.02 DESCRIPTION.

Protective coating for use on the esplanade and flood protection system shall be a two-part coal tar epoxy polyamide coating system suitable for the waterfront environment.

559.03 MATERIALS.

(A) COATING

Coal Tar Epoxy Polyamide coating system shall comply with SSPC-PAINT16 and shall be a two-part 4:1 system conforming to SSPC-PS11.01

559.04 SUBMITTALS.

(A) PRODUCT DATA

1. Materials list of items proposed to be provided under this Section.
2. Manufacturer's specifications, recommended installation procedures and equipment, Materials Safety Data Sheets (MSDS) and other pertinent data needed to prove compliance with the specified requirements.
3. Tools for mixing and application, as approved by the manufacturer of the coating system supplier.
4. Manufacturer's instruction for field touch-up of damaged coating.

(B) CERTIFICATES

1. Field Test Results.

559.05 METHODS.

(A) GENERAL

Coating work shall only commence when ambient and curing temperatures are within limits of the coating manufacturer's recommendations and at least 5 degrees F above dew point temperature.

Ensure proper identification after packages are opened and all manufacturer safety recommendations are followed.

At time of delivery all products shall be dry, sealed in their original packages and containers, free of mud, oil, and any other materials or contaminants that may adversely affect quality.

(B) SURFACE PREPARATION

Prepare steel surfaces for coating applications in accordance with SSPC-SP10/NACE No. 2, or as otherwise recommended by manufacturer.

(C) PROPORTIONING OF COAL TAR EPOXY-POLYAMIDE SYSTEM

Coal tar epoxy-polyamide consists of a two-component system. Component A contains a refined coal tar pitch, polyamide resin, and a polyamine promoter to accelerate curing rate. Component B is an epoxy resin. Mix both components in a ratio of 4 parts of Component A to 1 part of Component B by volume. When thinning is allowed and is necessary for proper application, use xylene or the

coating manufacturer's recommended thinner, to a maximum of 1/2 gallon to a 5-gallon batch.

Power-stir components to a smooth, uniform consistency. Stir coating periodically during induction period. Follow coating manufacturer's requirements for induction time and pot life of mixed batches.

(D) COATING APPLICATION

Coatings shall be shop applied. Apply primer coating to dry surfaces not more than 4 hours after near-white blast cleaning. Apply coats so that finished surfaces are free from runs, sags, brush marks and variations in color.

Unless otherwise specified by manufacturer's recommendations, do not allow drying time between coats to exceed 72 hours. Under conditions of direct sunlight or elevated ambient temperatures of 90 degrees F or greater, limit intercoat drying period to a maximum of 24 hours.

Repair detected coating holidays, thin areas, exposed areas, and areas damaged during welding procedures prior to or during installation by surface treatment and application of additional coating or by manufacturer's recommendations. Allow a period of at least 72 hours to pass following final coat before placing in immersion service.

Apply the first coat to yield a dry film thickness of 8 to 10 mils. Apply the second coat so that the total dry film thickness of the two coats is between 16 and 20 mils. Measure using a magnetic thickness gage.

Coating shall be applied to the following steel elements to the extents described below, unless otherwise noted:

Floodwall and Floodgate Foundations
- Coat full length of steel pipe pile and sheet piles
- For steel sheet piles, both faces shall be coated.
- For steel pipe piles, only the outside exposed face shall be coated.

Esplanade Cut-off Wall
- Coat waterside face of the cut-off wall from top of wall down to 15 ft below the mudline
- Coat landside face of the cut-off wall from top of wall down to 5 ft below the bottom of concrete pile cap

Deadman
- No coating

Embayment and Esplanade Pipe Piles
- Coat from top of pile to 15 ft below the mudline

(E) FIELD TOUCH-UP

Touch-up areas of coating damage for all sheet piles and pipe piles with coal tar epoxy. Use same color as original coating. Follow manufacturer’s instructions.

(F) FIELD TESTS

Conduct testing in the presence of the Engineer.

Holiday Testing

1. Prior to installation, test for holidays in total coating system.

2. Use a low-voltage holiday detector of less than 90 volts in accordance with manufacturer's recommendations.
3. After repair of holidays of surface treatment and application of additional coating or by manufacturer's recommendation, retest with low voltage holiday detector.

Dry Film Thickness

1. After repair of holidays, measure dry film thickness using a magnetic dry film thickness gage in accordance with ASTM D1186 and ASTM E376.
2. Re-measure after an additional coat is applied.
3. Continue to apply additional coats until minimum thickness requirements are met.

559.06 MEASUREMENT AND PAYMENT.

No separate payment will be made for complying with the requirements of this Section.

END OF SECTION

SECTION ESCR-564 – STRUCTURAL STEEL

564.01 INTENT.

This section describes structural steel for use in the esplanade cut-off wall and flood protection systems.

564.02 DESCRIPTION.

Structural steel, under this section, shall refer to all permanent structural steel members and hardware used in the esplanade and flood protection systems, including utility crossings.

564.03 MATERIALS.

(A) Structural steel shapes and plates shall be ASTM A36, unless otherwise shown on the Contract Drawings.

(B) Bolts, nuts and washers shall conform to the provisions of ASTM A325, A563, & F436, respectively.

(C) Structural steel and hardware specified to be coated shall be coated in accordance with specification Section ESCR-559 – Protective Coating for Waterfront Structures.

(D) Structural steel and hardware specified to be galvanized shall be galvanized in accordance with ASTM A123 Zinc (Hot-Dip Galvanized) Coating on Iron and Steel Products.

564.04 SUBMITTALS

(A) PRODUCT DATA

1. Materials list of items proposed to be provided under this Section.
2. Manufacturer's specifications, recommended installation procedures and equipment and other pertinent data needed to prove compliance with the specified requirements.
3. Manufacturers' catalogs indicating pull-out and shear strengths of all inserts.

(B) SHOP DRAWINGS

1. Fabrication and erection drawings, including welds. Drawings shall be executed in conformance with recommendations and requirements contained in the AISC Publication: DETAILING FOR STEEL CONSTRUCTION.

(C) CERTIFICATES

1. Submit certificate stating that all materials and procedures meet or exceed the specified requirements of this Section.
2. Mill certificates certifying chemical and physical properties of all steel furnished.

(D) REPORTS AND RECORDS

1. Inspection and Test Reports
2. Welding Qualification Records
3. Welding Procedures

564.05 METHODS.

(A) All structural steel work, including, but not limited to fabrication inspection, transportation, and erection shall be performed in accordance with the provisions of the AISC Manual of Steel Construction and Code of Standard Practice For Steel Buildings and Bridges.

(B) INSPECTION OF BOLTED CONNECTIONS AND WELDS.

The Contractor shall provide all labor and equipment necessary for the performance of inspection of bolt tightness during structural steel fabrication and erection.

Welds shall be inspected in accordance with AWS D1.1.

(C) QUALIFICATION TEST FOR WELDERS, WELDING PROCEDURES AND ELECTRODE AND FLUX COMBINATIONS.

The Contractor shall provide tests and certifications required to qualify welders, welding procedures and electrode and flux combinations in accordance with AWS D1.1.

(D) RADIOGRAPHIC INSPECTION.

Where shown on the Contract Drawings, the Contractor shall provide radiographic inspection and of preparation for radiography, together with the cost of providing access and of furnishing adequate facilities for the review of radiographs in the shop or field.

(E) ULTRASONIC INSPECTION.

Ultrasonic inspection (UT) shall be performed on all full penetration welds in accordance with AWS D1.1. Any UT inspection work to be done on the job site will be performed by the City's designated representative. The Contractor shall perform any required preparation and furnish access to the weld joints to be inspected.

(F) MAGNETIC PARTICLE INSPECTION.

The Contractor shall provide magnetic particle inspection when specified or required by the inspector to verify limits of defects discovered during visual inspection.

(G) REPAIR OF DEFECTS IN WELDS AND BASE METAL.

The Contractor shall repair defects found by visual inspection or nondestructive tests at no additional cost to the City.

(H) STRAIGHTENING BENT MATERIAL AND CORRECTING CAMBER DEFICIENCIES.

The Contractor shall perform all corrective work required to straighten bent material and correct camber deficiencies, when permitted, at no additional cost to the City.

(I) FIELD REPAIR, REAMING AND DRIFTING OF HOLES.

Oversize reaming beyond the hole size shown on the shop drawings is not acceptable. The use of reamers to make up connections instead of drifting will not be allowed. Flame enlarging of holes will not be allowed. The Contractor shall

provide all work permitted for the correction of unacceptable holes, including the installation of larger bolts, at no additional cost to the City.

Repair for Galvanized Steel

Contractor shall be required to repair damaged areas of galvanized zinc coating. Damage may result from wet storage (white rust), welding or cutting (flame), or from excessive rough handling during shipping or erection. In general, only field repairs will be allowed. Shop repairs shall only be permitted when the total area of damage on any single piece is less than 2% of the coated surface or 10 000 mm, whichever is less. Any coated piece on which the total area of damage exceeds these amounts in the shop shall be rejected.

Materials for field repair shall be selected from NYSDOT's Approved List of Galvanized Repair Materials. Zinc solders shall be zinc-cadmium and zinc-tin-lead alloys supplied in stick or paste form, and that liquidize for application at temperature ranges of from 270 to 275P OPC and 230 to 260P OPC, respectively. Zinc paints shall contain not less than 65% zinc dust (by weight) in the dried paint film and shall meet current standards for the emission of volatile organic compounds. Detailed requirements for the approval of galvanized repair materials are available from the NYSDOT Materials Bureau.

Corrosion deposits shall be removed in a manner satisfactory to the Engineer prior to incorporation of the material in the work. After removal of these deposits, the coating shall have a uniform appearance free from uncoated spots, lumps, blisters, gritty areas, acid, flux and black spots. Materials with these defects will be rejected and shall be immediately removed from the worksite. Acceptable material shall be provided to replace rejected material at no additional expense.

Damaged areas of loose and deteriorated galvanized zinc coating shall be cleaned by power sanding, power grinding, or abrasive blast cleaning to bright metal. If zinc solder is used for repairs the cleaned area shall be preheated in accordance with the manufacturer's instructions for use. The heated surface shall then be rubbed with a repair stick to evenly distribute a layer of zinc alloy, or if zinc paste is used it shall be spread evenly using a spatula or similar tool. Zinc solder shall be deposited in a uniform layer at a minimum dry film thickness of 75 µm. If zinc paint is used for repairs it shall be applied in accordance with the manufacturer's instructions for use, using a brush or by spray methods. Zinc paint shall be applied in such quantity as to produce a minimum dry film thickness of 75 µm.

(J) FIELD SPLICES.

Field splice locations and details are shown in the Contract Drawings. If the Contractor wishes to change the location of the splice(s), the Contractor shall submit a request to the Engineer for approval.

564.06 MEASUREMENT.

The quantity of structural steel to be measured for payment shall be the weight of steel, measured to the nearest pound, installed to the satisfaction of the Engineer. Steel density used to compute the weight of steel for payment shall be 490 lbs/cubic feet.

The weight of steel as shown on the approved shop drawings, shall include permanent bolts and welds in the structure as erected. The weight of all required bolts, nuts, washers, and all required welds will be estimated be adding 3% to the steel weight estimate, making no allowance for waste, and included in the weight for which payment will be made.

The weight of all erection materials including but not limited to bolts, pilot and driving nuts, temporary protective coatings, and all boxes, crates or other containers used for packing, together with sills, struts, and rods used for supporting members during transportation, will be excluded from the measurement for payment.

564.07 PRICE TO COVER.

The contract unit price for structural steel shall cover the cost of all labor, materials, plant, equipment, insurance, samples, and incidentals required to furnish, and install in full compliance with the requirements of the specifications and drawings.

Payment will be made under:

Item No.	Item	Pay Unit
ESCR-564	STRUCTURAL STEEL (UNCOATED)	LBS.
ESCR-564.CT	STRUCTURAL STEEL (COATED)	LBS.
ESCR-564.G	STRUCTURAL STEEL (GALVANIZED)	LBS.

END OF SECTION

SECTION ESCR-567 – ESPLANADE JOINT SYSTEM

567.01 INTENT.

This section describes the joint system used on the esplanade structure.

567.02 DESCRIPTION.

The work shall consist of fabricating, furnishing, and installing a joint system at the locations indicated on the Contract Drawings.

567.03 MATERIALS.

(A) Structural steel angles and plates shall be ASTM A36.

(B) Steel bolts, nuts, and washers shall be ASTM A325.

(C) Structural shapes and plates shall be galvanized in accordance with ASTM A123.

(D) Steel hardware shall be galvanized in accordance with ASTM A153.

(E) Concrete headers as indicated in the Contract Drawings shall be in full compliance with the requirements in Section ESCR-4.06 and paid under Item No. ESCR-4.06 HP ES.

567.04 SUBMITTALS.

(A) Shop Drawings

Drawings for the joint system shall show complete member dimensions and details, installation sequence, and location of installed joint.

567.05 METHODS.

Joints shall be installed as shown on the Contract Drawings.

567.06 MEASUREMENT.

The quantity of joints to be measured for payment shall be the number of linear feet, measured to the nearest tenth a foot (edge to edge of the joint as shown on the plans) furnished and installed in accordance with the plans and specifications, and to the satisfaction of the Engineer. No payment or allowance will be made for joints placed beyond the limits specified or for the concrete that the joint will be embedded in.

567.07 PRICE TO COVER.

The contract unit price shall cover the cost of all labor, materials, plant, equipment, insurance, samples, and incidentals required to furnish and install the joint, in full compliance with the requirements of the specifications, to furnish such samples for testing and to provide such testing equipment, laboratory space and facilities as may be required. Damaged joints shall be satisfactorily repaired or replaced by the Contractor at no cost to the City.

Payment will be made under:

Item No.	Item	Pay Unit
ESCR-567.LG	LONGITUDINAL EXPANSION JOINT BETWEEN THE ESPLANADE AND CUT-OFF WALL	L.F.
ESCR-567.PC	TRANSVERSE EXPANSION JOINT AT PILE CAPS BETWEEN THE ESPLANADE SPANS	L.F.

END OF SECTION

SECTION ESCR-9230 – SLEEVING AND SEALING FOR ELECTRICAL CONDUITS

9230.1 DESCRIPTION.

This section describes the furnishing, delivering and installing of conduit-to-wall and utility crossing penetration seals including PVC sleeves and anchor/water stop plates for electrical conduits.

9230.2 MATERIALS.

All conduit-to-wall and utility crossing penetration seals including PVC sleeves and anchor/water stop plates shall be in accordance with Con Ed Drawing EO-9230-15 titled “Sleeve Details and Method of Sealing H.P. Cable Pipe”.

9230.3 CONSTRUCTION METHODS.

All conduit-to-wall and utility crossing penetration seals including PVC sleeves and anchor/water stop plates shall be installed in accordance with Con Ed Drawing EO-9230-15 titled “Sleeve Details and Method of Sealing H.P. Cable Pipe”.

9230.4 MEASUREMENT.

The quantity of conduit-to-wall and utility crossing penetration seals including PVC sleeves and anchor/water stop plates measured for payment shall be the number of each size conduit-to-wall or utility crossing penetration seal including PVC sleeve and anchor/water stop plate furnished, delivered and installed by the Contractor.

9230.5 PAYMENT.

The contract price for sleeves and sealing of electrical conduits shall be the unit price bid per each conduit-to-wall or utility crossing penetration seal including PVC sleeve and anchor/water stop plate furnished, delivered and installed. The unit cost shall cover the cost of all labor, equipment, materials, plant, samples, tests and insurance required and necessary to furnish, deliver and install the penetration seals including PVC sleeves and anchor/water stop plates in the manner specified herein and as directed by the Engineer.

Payment will be made under:

Item No.	Item	Pay Unit
ESCR-9230	FURNISHING, DELIVERING AND INSTALLING CON-ED PIPE TO WALL PENETRATION SEAL, INCLUDING SLEEVE AND ANCHOR/WATER STOP PLATE	EACH

END OF SECTION

SECTION HW-914 – ALLOWANCE FOR (WAYFINDING) TOTEMS

HW-914.1. DESCRIPTION.

Under this item, the Contractor shall be required to pay to the New York City Department of Transportation (NYCDOT) TOTEM sign Contractor for furnishing and installing new (WAYFINDING) TOTEMS.

HW-914.2. MATERIALS.

(Not applicable)

HW-914.3. CONSTRUCTION DETAILS.

The NYCDOT TOTEMS sign Contractor shall only install (WAYFINDING) TOTEMS signs once the foundation including paving tray and steel foundation plate has been installed by the Contractor. The Contractor shall pick up, deliver to the project site and install the paving tray and steel foundation plate in accordance with plans, specifications and as directed by the Engineer. All costs for pick up, deliver to the project site and installation of the paving tray and steel foundation plate shall be deemed to be included in all scheduled items for foundation work pertinent to (Wayfinding) TOTEMS signs.

HW-914.4. METHOD OF MEASUREMENT.

The fixed price lump sum shown in the Bid Schedule for this item shall be included in the total bid price; however, actual payment to the Contractor will be based on the actual invoices submitted by the NYCDOT TOTEM sign Contractor.

It is agreed that all work shall be based on the actual number of (Wayfinding) TOTEM SIGNS that are installed by the NYCDOT TOTEM sign contractor to the satisfaction of the Engineer.

HW-914.5. BASIS OF PAYMENT.

The fixed sum shown in the proposal for the (Wayfinding) TOTEMS sign shall be considered the price bid for this item. The fixed sum is not to be altered in any manner by the bidder. Should the amount shown be altered, the new figures will be disregarded and the original price will be used to determine the total amount bid for the contract.

The fixed sum payment made under this item shall be equal to the sum of all invoices submitted by the NYCDOT TOTEM sign Contractor as proof of work performed for this item, as approved by the Engineer.

The total estimated cost of this item is the "fixed sum" amount shown for this item in the Bid Schedule and shall not be varied in the bid. The "fixed sum" amount is included in the bid solely to ensure that sufficient monies will be available to pay the Contractor for this work, which may be more or less than the fixed sum amount.

The unit price shall cover the cost of all labor, materials, equipment, insurance, and incidentals necessary to complete the work under this section in accordance with the Contract Drawings, the specifications and the directions of the Engineer.

Payment will be made under:

Item No.	Item	Pay Unit
HW-914	ALLOWANCE FOR (WAYFINDING) TOTEMS	F.S.

SECTION 8.52 FP – STEEL FOUNDATION PLATE

(NOT A PAY ITEM)

8.52FP.1. **INTENT.** This section describes the furnishing and installation of the Foundation Plate.

8.52FP.2. **DESCRIPTION.** The Steel Foundation Plate shall be embedded in the poured concrete footing to the nominal dimensions as indicated on the contract drawings and specifications.

8.52FP.3. **MATERIAL.** Steel Foundation Plates shall comply with the requirements of the NYC Department of Transportation (DOT) Standard Highway Specifications **Section 2.35, Structural Steel** and shall be galvanized in accordance with **Section 2.34.**

8.52FP.4. **SUBMITTALS.** Shop drawings of each steel plate showing bolt locations shall be provided by the Contractor in accordance with the requirements of **Section 1.06.13** of the NYC DOT Standard Highway Specifications, for review and approval prior to fabrication.

8.52FP.5. **NOT USED.**

8.52FP.6. **MEASUREMENT.** Payment will be based on the computed weight of metal as shown on the approved shop drawings, and shall include, but not be limited to, permanent bolts and welds in the structure as erected.

Not to be included in the measurement is the weight of all erection materials including but not limited to bolts, pilot and driving nuts, temporary protective coatings, and all boxes, crates or other containers used for packing, together with sills, struts, and rods used for supporting members during transportation.

The weight of all required bolt heads, nuts and washers will be estimated, making no allowance for waste, and included in the weight for which payment will be made. The mass of all required welds will be estimated and included in the mass for which payment will be made.

8.52FP.7. **BASIS OF PAYMENT.** No additional payment will be made for compliance with the provisions of this section.

SECTION 8.52 PT – PAVING TRAY

(NOT A PAY ITEM)

8.52PT.1. **INTENT.** This section describes the furnishing of the ground level paving tray.

8.52PT.2. **DESCRIPTION.** Fabricated steel plate frame, angle and flat textured cover plate assembly, configured and to nominal dimensions as indicated on the contract drawings and specifications.

8.52PT.3. **SUBMITTALS.** All submittals shall be provided by the Contractor in accordance with the requirements of the NYC Department of Transportation's Standard Highway Specifications, General Conditions, **Section 1.06.13**.

(A) Shop Drawings: Erection and fabrication drawings for all totem components and accessories. Show plans and elevations at not less than 1/4 inch to 1'-0" scale, and details at not less than 1-1/2 inch to 1'-0" scale.

(B) Product Data: Manufacturer's printed specifications and installation instructions for each type of metal framing and accessory, including data required to show compliance with the Drawings and Specifications.

8.52PT.4. **MATERIALS.**

(A) Steel plate & Side Brackets:
- a. Material & Finish: Grade 304 Stainless Steel, Mill finish.
- b. Thickness: 1/4"
- c. Side Brackets" As required, to be agreed with the Engineer prior to fabrication
  1. Edges: All edges to be polished and rounded off
  2. Joints: Plate sections to be butt jointed
  3. Installed level: To be aligned flush with poured concrete sidewalk

(B) Cover Plate:
- a. Material & Finish: Grade 304 Stainless Steel, Textured 'Durbar' plate.
- b. Thickness: ¼"
- c. Edges: All edges to be polished and rounded off
- d. Finished installed level: To be aligned flush with poured concrete sidewalk
- e. Mounting Screws:
  1. Exposed to sidewalk: To be stainless steel with tamper proof torx' head or approved equivalent
  2. Beneath Sidewalk: To be stainless steel socket head

(C) Temporary Cover Plate Mounting Brackets:
- a. Material & Finish: Grade 304 Stainless Steel with mill finish.
- b. Nominal Thickness: As required by Contractor to safely support imposed sidewalk live loads.
- c. Bolt Fixings: To be stainless steel, sized and configured to support imposed sidewalk live loads.

8.52PT.5. **METHOD.**

(A) Fabrication:
- a. Plates cut and seam welded directly to each other
- b. Side brackets spot welded directly to plates.
- c. Provide all necessary Jigs for placement of paving trays relative to Totem foundation plates, provided a minimum of 6 jigs per Totem type.

8.52PT.6. **MEASUREMENT.** The quantity to be measured for payment shall be the number of new paving trays, of each size and type listed below, actually installed to the satisfaction of the Engineer.

Type	Item	Length	Width
A	Paving Tray (Pathway Totem)	1'-7 ¼"	8 ½"
B	Paving Tray (Area Totem)	2-11 ¼"	8 ½"
C	Paving Tray (Neighborhood Totem)	4'-3 ¼"	8 ½"

8.52PT.7. **BASIS OF PAYMENT.** No additional payment will be made for compliance with the provisions of this section.

SECTION 8.52 WSF – WAYFINDING SIGN FOOTING

8.52 WSF.1. INTENT.

Under this section, the Contractor must furnish concrete footing for the wayfinding sign and all necessary incidentals in accordance with the Contract Drawings, the specifications and the directions of the Engineer.

8.52 WSF.2 MATERIALS.

(A) Saw cut must be done in accordance with **Section 6.55** and price must be deemed included in the price of this item.

(B) Excavation must be done in accordance with **Section 6.02** and its **Item No. 6.02 AAN** and price must be deemed included in the price of this item. Special care excavation must be done in accordance with **Section 8.02** and **Item No. 8.02 A** and must be paid accordingly under its respective pay item number in the BID SCHEDULE.

(C) Concrete must meet with the requirements of **Section 3.05, Concrete**, and be of the class, type and mixing specified and will be done in accordance with **Section 4.06**; price must be deemed included in the price of this item. Subbase material must be of the type, grade, size number and nominal size specified and must be done in accordance with **Section 6.67**; Type MATERIAL B, price must be deemed included in the price for this for this item.

(D) Concrete reinforcement must comply with the requirements of the following sections:

Steel Bars--**Section 2.23.** Kind of reinforcement, size and placement must be as specified and as shown on Contract Drawings. Reinforcement must be installed in accordance with the requirements of **Section 4.14** and price is deemed included in the price of this item.

(E) Joint Sealer and pre-molded joint filler as shown on Contract Drawings must comply with the requirements of **Section 2.22** and **Section 2.15** respectively type as specified and price is deemed included in the price of this item.

(F) Anchor Bolt ASTM A240, Grade 304, ½" dia., to be drilled and installed with epoxy filler as shown on Contract Drawings or as directed by the Engineer.

(G) Galvanized Steel Footing Plate to be installed as per Contract Drawings and **Section 8.52 FP**, cost of installation is deemed included in the price of this item. Furnishing of this plate must be made under **Section 8.52**.

Paving tray and temporary cover plate to be installed as per drawing and **Section 8.52 PT**, cost of installation is deemed included in the price of this item. Furnishing paving tray and temporary cover plate must be made under **Section 8.52**.

Galvanized rigid metal conduit, where required, must be in accordance with Chapter 5 of NYCDOT Specifications for the installation of conduit, duct and bends (November 2013) or HDPE pipe, schedule 40, in accordance with **Subsection C5.2.1**, page 63 of NYCDOT specifications for traffic signals and its systems (November 2013); as directed by the Engineer and as shown in the drawings.

Plastic Filter fabric must be done in accordance with **Section 6.68** and price must be deemed included in the price of this item.

8.52 WSF.3. DESIGN AND CONSTRUCTION OF FORMS

Forms must accurately conform to the shape, lines and dimensions of the footing for which they are required, be substantial and sufficiently tight to prevent leakage of mortar, and have,

unless otherwise specified by the Engineer, moldings or chamfer strips at angles. They must be of adequate strength and be braced or tied together with approved ties and spacers, to maintain position and shape, and to insure the safety of workmen and passersby, be clean and free from sawdust, chips, dirt, ice and other objectionable materials. Forms must present smooth, true surfaces to the concrete placed against them, having temporary openings where necessary, to facilitate cleaning and inspection immediately before concrete is deposited. Forms must be coated with non-staining oil before the reinforcement is placed, or be wetted except in freezing weather.

8.52 WSF.4. MEASUREMENT.

The quantity measured for payment shall be the number of footings of type specified, installed in accordance with the Contract Drawings, the specifications and to the satisfaction of the Engineer.

8.52 WSF.5 BASIS OF PAYMENT.

The contract price for each wayfinding sign footing of the type specified must cover the cost of labor, materials, equipment, insurance, and incidentals required to construct respective wayfinding footings, including but not limited to, the furnishing and incorporation of all concrete; reinforcement; curing; finishing; samples; testing equipment and facilities for testing; all, in accordance with the Contract Drawings, the specifications and the directions of the Engineer.

The cost of all items referenced in this Section, with the exception of Items 4.13 AAS and 8.02 A, must be deemed included in the contract price of wayfinding sign footings of type specified.

Payment will be made under:

Item No.	Item	Pay Unit
8.52 WSF-A	WAYFINDING SIGN FOOTING TYPE A	EACH
8.52 WSF-B	WAYFINDING SIGN FOOTING TYPE B	EACH
8.52 WSF-C	WAYFINDING SIGN FOOTING TYPE C	EACH
8.52 WSF-D	WAYFINDING SIGN FOOTING TYPE D	EACH

SECTION 7.07 B - FURNISH AND INSTALL NEW STEEL BOLLARDS

DESCRIPTION: Under this section, the Contractor shall furnish all labor, material, plant, equipment, and incidentals necessary to furnish and install bollards in accordance with the plans, the specifications, and the directions of the Engineer.

MATERIAL: Steel pipe for bollards shall be 6" nominal in diameter having a 0.188" wall thickness, 66" long and shall comply with the requirements of ASTM designation A120 for hot-dipped galvanized steel pipe, except that the pipes shall be untested for water pressure. Prior to galvanizing, welded seams shall be ground smooth or otherwise dressed and not readily readable on casual inspection or otherwise objectionable to the Engineer.

Concrete for foundation and fill shall be Class B-32, Type IIA; cement - Type II Portland; sand - Type lA; coarse aggregate Type 1, Grade B, or Type 2, Size No. 57; and an approved air-entraining agent shall be added at the time that concrete is mixed. Concrete, cement and aggregate shall comply with the requirements of Section 3.05 of the Standard Highway Specifications.

Primer coat for galvanized surfaces shall be zinc dust-zinc oxide, conforming to Federal Specifications TT-P 641G.

Finish coat above grade for bollards shall be safety yellow in color and shall conform to Federal Specification TT-P-37C.

All other materials shall be as approved by the Engineer.

METHODS: Bollards shall be shop fabricated from hot-dipped galvanized steel pipes. After bollards have been fabricated, painted and filled with concrete, they shall be set in-place in a concrete collar at the locations shown on the plans.

After fabrication, all exterior metal surfaces of the bollards shall be shop painted. Prior to painting, the galvanized bollards shall be thoroughly cleaned with a solvent such as mineral spirits or turpentine, to remove all dirt, grease and foreign matter, and then pre-treated with a "wash-coat". The "wash-coat" shall be of a type conforming to the requirements of Military Specification MIL-P-15328b or c, or an approved equal standard. Pre-treatment may be applied by any method, as approved by the Engineer. After the pre-treatment has dried, the bollards shall be prime painted and then finished painted as follows:

Above grade the bollards shall be painted with two shop coats of finish paint.

Below grade the bollards and foundation sleeve shall be coated with a black asphalt paint as approved by the Engineer.

Handling, shipping and erecting of painted steel bollards shall not be performed until coatings are thoroughly dry. Special care shall be exercised to avoid abrasion, staining, or other damage to the painted surface.

Stacking and storing of painted bollards in the shop, in transit, and at the job site shall be done using softeners and timbers to keep individual members free from contract with the ground and with each other. Also, bollards shall be protected from soiling by adjacent fabrication or construction operations.

The Contractor shall excavate required depth necessary to install the bollard in a 18" diameter, 36" deep concrete collar. Steel pipe shall be shimmed and leveled as necessary and set 30" within the concrete collar such that when bollards are set in-place they will be vertical, in plumb, and at equal elevations in their final position. Concrete collars shall be finished to match the

proposed new adjacent surface with a 1” wash. Then backfill around concrete collars to the subgrade of proposed sidewalk. Steel pipe shall be filled with concrete and a rounded concrete dome on top of the pipe, approximately 2” above the pipe, shall be formed.

New sidewalk around bollards shall be furnished and placed under the appropriate sidewalk item.

Touchup after erection shall consist of smoothing all abraded areas and building back each coat damaged to achieve the initial condition. Surface areas that have been abraded to bare metal shall be cleaned and then painted in proper recoating intervals.

SHOP DRAWINGS: Shop drawings shall be submitted by the Contractor to the Engineer for approval prior to fabrication and installation.

MEASUREMENT: The quantity to be measured for payment shall be the number of bollards actually installed to the satisfaction of the Engineer.

PRICE TO COVER: The contract price bid per each steel bollard furnished and installed shall cover the cost of all labor, material, plant, equipment, and incidentals necessary to complete the work including, but not limited to, fabrication, painting of bollards, sand and concrete fill and collars, all excavation and backfilling, and shop drawings, all in accordance with the plans, the specifications, and the directions of the Engineer.

Payment will be made under:

Item No.	Description	Pay Unit
7.07 B	FURNISH AND INSTALL NEW STEEL BOLLARDS	EACH

(NO TEXT ON THIS PAGE)

FLOODGATE - PAGES

SPECIAL FLOODGATE SPECIFICATIONS

CONTRACT SANDRESM1

The specifications in the FLOODGATE-Pages cover the procurement, fabrication, and construction of the roller gates and swing gates, including all foundations, concrete work and metal fabrication and associated works as well as the quick-change moveable concrete barrier.

The FLOODGATE-Pages supplement the specifications shown on the Specifications and Standards of New York City sheet at the beginning of this Volume 3, which apply to the work except as modified in these Contract Documents.

(NO TEXT ON THIS PAGE)

TABLE OF CONTENTS

Section	Description	Page No.
Section ESCR 50	Fabricated Steel Floodgates	1
Section 619.3610	Quick-Change Moveable Concrete Barrier Transfer Vehicle (QMCBTV) - Lease & Maintain	23
Section 619.3614	Quick-Change Moveable Concrete Barrier (QMCB) – Purchase or Lease & Maintain	24
Section 619.37	Quick-Change Moveable Concrete Barrier (QMCB) – Operation	25
Section ESCR 6.25 GS	Greenway Rerouting Signs	26
Section ESCR 6.25 GSX	Remove Greenway Rerouting Signs	26
Section 6.34 T	Temporary Chain Link Fence and Gate	29
SECTION 9.06 HW	Allowance for Decorative Mesh Fabric	30

(NO TEXT ON THIS PAGE)

SECTION ESCR 50 – FABRICATED STEEL FLOODGATES

50.1 INTENT.

This specification covers the requirements for furnishing all plant, equipment, labor, and materials for fabricating, assembling, delivering, and installing closure gates in accordance with these specifications and applicable drawings.

50.2 DESCRIPTION.

50.2.1 SWING GATE

This type of closure gate for flood protection constitutes a fabricated metal panel which sits on a concrete slab mounted hinge on one end and is connected with a hinge at the top on the same end. The other cantilevered end is free to move as the gates pivot around the axis through the hinges. During non-flood condition, the gate is usually kept swung open. The free end of the gate is usually supported with a hydraulic jack and is latched to a storage monolith (wall), usually featuring a vertical concrete column. At the wake of the flood, the hydraulic jack or screw is taken off; the gate is swung closed and is latched with the gate monolith, preventing any movement. The gate is pressed against the monolith. This causes a continuous rubber seal, running along two vertical edges and also horizontally along the bottom of the gate, to be engaged producing a watertight seal that blocks any water intrusion through the gate.

50.2.2 ROLLER GATE

Roller type flood gate consists of a fabricated metal panel that sits on two rows of wheels running on tracks. The gate is pushed on one side during normal operating conditions opening up the monolith for access. In the wake of a flooding event, the roller gate panel is pushed towards the opening using winches. Once in place, the gate panel is latched to the concrete column on either end. A continuously running rubber seal, located on two vertical edges and along the horizontal bottom part of the gate, is pressed on the concrete monolith forming a watertight barrier.

50.3 REFERENCES

The publications listed below form a part of this specification to the extent referenced. The publications are referred to within the text by the basic designation only.

ASTM International

- ASTM A 1 Standard Specification for Carbon Steel Tee Rails
- ASTM A 27 Standard Specification for Steel Castings, Carbon, for General Application
- ASTM A 36 Specification for Carbon Structural Steel
- ASTM A 123 Zinc (Hot-Dip Galvanized) Coatings on Iron and Steel Products
- ASTM A 123 Specification for Zinc (Hot-Dip Galvanized) Coatings on Iron and Steel Products
- ASTM A 148 Standard Specification for Steel Castings, High Strength, for Structural Purposes
- ASTM A 153 Specification for Zinc Coating (Hot-Dip) on Iron and Steel Hardware
- ASTM A 240 Standard Specification for Chromium and Chromium – Nickel Stainless Steel Plate, Sheet, and Strip for Pressure Vessels and General Applications
- ASTM A 276 Specification for Stainless Steel Bars and Shapes
- ASTM A 320 Standard Specification for Alloy – Steel and Stainless Steel Bolting for Low – Temperature Service

- ASTM A 325 Structural Bolts, Steel, Heat Treated, 120/105 ksi Minimum Tensile Strength
- ASTM A 380 Standard Practice for Cleaning and Descaling Stainless Steel Parts, Equipment, and Systems
- ASTM A 489 Standard Specification for Carbon Steel Lifting Eyes
- ASTM A 490 Heat-Treated Steel Structural Bolts, 150 ksi Minimum Tensile Strength
- ASTM A 501 Standard Specification for Hot-Formed Welded and Seamless Carbon Steel Structural Tubing
- ASTM A 514/A 514M Standard Specification for High-Yield-Strength, Quenched and Tempered Alloy Steel Plate, Suitable for Welding
- ASTM A 563 Standard Specification for Carbon and Alloy Steel Nuts
- ASTM A 564 Standard Specification for Hot – Rolled and Cold – Finished Age – Hardening Stainless Steel Bars and Shapes
- ASTM A 572 Standard Specification for High-Strength Low-Alloy Columbium-Vanadium Structural Steel
- ASTM A 709 Standard Specification for Carbon and High-Strength Low-Alloy Structural Steel Shapes, Plates, and Bars and Quenched-and-Tempered Alloy Structural Steel Plates for Bridges
- ASTM A 992 Standard Specification for Structural Steel Shapes
- ASTM A 780 Standard Practice for Repair of Damaged and Uncoated Areas of Hot-Dip Galvanized Coatings
- ASTM B 22 Standard Specification for Bronze Castings for Bridges and Turntables
- ASTM B 177 Standard Guide for Engineering Chromium Electroplating
- ASTM B 766 Standard Specification for Electrodeposited Coatings of Cadmium
- ASTM B 823 Standard Specification for Materials for Copper Base Powder Metallurgy (PM) Structural Parts
- ASTM D 395 Standard Test Methods for Rubber Property—Compression Set
- ASTM D 412 Standard Test Methods for Vulcanized Rubber and Thermoplastic Elastomers—Tension
- ASTM D 471 Standard Test Method for Rubber Property—Effect of Liquids
- ASTM D 572 Standard Test Method for Rubber—Deterioration by Heat and Oxygen
- ASTM D 2240 Standard Test Method for Rubber Property—Durometer Hardness
- ASTM E 165 Standard Practice for Liquid Penetrant Testing for General Industry
- ASTM E 709 Standard guide for Magnetic Particle Examination
- ASTM F 436 Standard Specification for Hardened Steel Washers
- ASTM F 593 Standard Specification for Stainless Steel Bolts, Hex Cap Screws, and Studs
- ASTM F 594 Standard Specification for Stainless Steel Nuts
- ASTM F 1145 Standard Specification for Turnbuckles, Swaged, Welded, Forged
- ASTM F 1554 Standard Specification for Anchor Bolts, Steel, 36, 55, and 105-ksi Yield Strength
- ASTM F 3125 Standard Specification for High Strength Structural Bolts and Assemblies, Steel and Alloy Steel, Heat Treated, Inch Dimensions 120 ksi and 150 ksi Minimum Tensile Strength, and Metric Dimensions 830 MPa and 1040 MPa Minimum Tensile Strength Specification for Anchor Bolts, Steel, 36, 55, and 105-ksi Yield Strength

American Society of Mechanical Engineers (ASME)

- ASME B4.1 Preferred Limits and Fits for Cylindrical Parts
- ASME B46.1 Surface Texture (Surface Roughness, Waviness, and Lay)

- ASME BPV IX Boiler and Pressure Vessel Code; Section IX, Welding and Brazing Qualifications

American Welding Society (AWS)

- AWS D1.1 Structural Welding Code - Steel
- AWS D1.2 Structural Welding Code – Aluminum
- AWS D1.5 Bridge Welding Code

Federal Specification

- FF-S-200A Setscrews: Hexagon Socket and Spline Socket, Headless
- FS RR-W-410 Wire Rope and Strand

New York State Department of Transportation

- Standard Specifications – Construction and Materials

50.4 MATERIALS.

50.4.1 METALS

Structural steel, steel forgings, steel castings, stainless steel, bronze, aluminum alloy, and other metal materials used for fabrication shall conform to the requirements shown and specified herein.

50.4.1 STRUCTURAL STEEL

Structural steel shapes shall conform to ASTM A572/A572M, Grade 50. Structural steel plates shall conform to ASTM A36/A36M.

50.4.2 SELF-LUBRICATING BEARINGS

Self-lubricating bearings shall conform to ASTM B823, Type II. The bearings shall be impregnated with a turbine grade lubricant containing oxidation and rust inhibitors and a polar anti-wear additive.

50.4.3 BRONZE CASTINGS

Bronze castings shall conform to ASTM B22/B22M, Copper Alloy UNS No. C91300.

50.4.4 STAINLESS STEEL PLATE, SHEET, STRIP, BAR AND SHAPE

Stainless steel plate, sheet, and strip shall conform to ASTM A240/A240M, UNS S 30400. Plate finish shall be hot-rolled, annealed or heat-treated, and blast-cleaned or pickled. Sheet and strip finish shall be No. 1.

Stainless Steel Bar and Shape shall conform to ASTM A564 TYPE 630 Condition H100, and ASTM A276/A276M as shown in the drawings.

50.4.5 RUBBER SEALS

Rubber seals shall be fluorocarbon (Teflon) clad rubber seals of the mold type only and shall be compounded of natural rubber, synthetic polyisoprene, or a blend of both, and shall contain reinforcing carbon black, zinc oxide, accelerators, antioxidants, vulcanizing agents, and plasticizers. Physical characteristics of the seals shall meet the following requirements:

Physical Test	Test Value	Test Method Specification
Tensile Strength	2500 psi (min.)	ASTM D412
Elongation at Break	450 percent (min.)	ASTM D412
300 percent Modulus	900 psi (min.)	ASTM D412
Durometer Hardness (Shore Type A)	60 to 70	ASTM D2240
Water Absorption	5 percent by weight (max.)	ASTM D471
Compression Set	30 percent (max.)	ASTM D395
Tensile Strength (after aging 48 hrs.)	80 percent of tensile strength (min.)	ASTM D572

The "Water Absorption" test shall be performed with distilled water. The washed specimen shall be blotted dry with filter paper or other absorbent material and suspended by means of small glass rods in the oven at a temperature of 70 degrees C plus or minus 2 degrees C for 22 plus or minus 1/4 hours. The specimen shall be removed, allowed to cool to room temperature in air, and weighed. The weight shall be recorded to the nearest 1 mg as M1 (M1 is defined in ASTM D471). The immersion temperature shall be 70 degrees C plus or minus 1 degree C and the duration of immersion shall be 166 hours.

Rubber seals shall have a fluorocarbon film vulcanized and bonded to the sealing surface of the bulb. The film shall be 0.060 inch thick Huntington Abrasion Resistant Fluorocarbon Film No. 4508, or equal, and shall have the following minimum physical properties:

Tensile strength	2,000 psi
Elongation	250 percent

The outside surface of the bonded film shall be flush with the surface of the rubber seal and shall be free of adhering or bonded rubber. Strips and corner seals shall be molded in lengths suitable for obtaining the finish lengths shown and with sufficient excess length to provide test specimens for testing the adequacy of the adhesion bond between the film and bulb of the seal. At one end of each strip or corner seal to be tested, the fluorocarbon film shall be masked during bonding to prevent a bond for a length sufficient to hold the film securely during testing.

50.4.6 BOLTS, NUTS AND WASHERS

All bolts shall be high-strength bolts unless noted otherwise on the Drawings. High-strength bolts, nuts, and washers shall conform to ASTM A325, Type 1, hot-dip galvanized or ASTM A490, Type 1. Bolts 1/2 inch and larger shall have heavy hexagon heads. The finished shank of bolts shall be long enough to provide full bearing. Washers for use with bolts shall conform to the requirements specified in the applicable specification for bolts. Nuts shall be ASTM A563, type to match bolt type and finish. Hardened steel flat and beveled washers shall be ASTM F436, type to match bolt finish.

50.4.7 SCREWS

Screws shall be of the type indicated.

50.4.8 SHACKLES AND TURNBUCKLES

Shackles and turnbuckles shall be of forged steel conforming to ASTM A668/A668M, zinc coated. Turnbuckles shall be end-threaded right and left hand and shall be of the size shown.

50.4.9 SCREW JACKS

Screw jacks shall have a 30,000 lb rated capacity and shall conform to the details shown.

50.4.10 WINCHES

Winches shall be 15,000 lb marine winches with 4.0-inch drum as specified in plans. Each winch shall be equipped with 75 foot of 1/2 inch diameter wire cable suitable for exterior exposure.

50.4.11 RAILS

Rail segments shall conform to 100 lb American Railway Engineering Association (A.R.E.A) rails.

50.4.12 WIRE ROPES

Wire rope shall conform to FS RR-W-410, Type III, Class 1, Construction 6 by 6 desk lashing ropes, improved plow steel, fiber core, as shown.

50.4.13 WHEELS

Wheels shall be short hub or long hub, rigid type, heavy duty steel casters fabricated from steel castings conforming to ASTM A148/A148M. Wheel shall be of the size and load capacity shown and shall be provided with lubrication fittings, roller bearings and removable axle. Wheel treads shall be machined-finished to conform with the indicated rail. Unless otherwise specified or shown, axles for wheels shall be of stainless-steel bars conforming to ASTM A276/A276M, UNS S30400.

50.4.14 PADLOCKS AND HASPS

Padlocks shall conform to CID A-A-59486C, Type II. Padlocks shall be keyed alike and provided with two keys. Hasps shall be of wrought steel and sized to accommodate padlocks.

50.4.15 ELASTOMERIC BEARING PADS

Elastomeric bearing pads shall conform to the requirements of NYSDOT Specification Section 716-11, Steel Laminated Elastomeric Bridge Bearings.

50.5 METHODS.

50.5.1 QUALITY ASSURANCE

(a) Qualification of welders and welding operators – Prior to welding, submit certification for each welder stating the type of welding and positions qualified for, the code and procedure qualified under, date qualified, and the firm and individual certifying the qualification tests. If the qualification date of the welder or welding operator is more than 6 months old, accompany the welding operator's qualification certificate with a current certificate by the welder attesting to the fact that the welder has been engaged in welding since the date

of certification, with no break in welding service greater than 6 months. Conform to all requirements specified in AWS D1.1/D1.1M or BPVC SEC IX.

50.5.2 DELIVERY, STORAGE, AND HANDLING

Perform delivery, handling, and storage of materials and fabricated items conforming to the requirements specified herein. Unload materials and equipment delivered to the site in the presence of the Engineer. Verify the condition and quantity of the items delivered by the Engineer and acknowledge receipt and condition thereof in writing. If delivered items are damaged or a shortage is determined, notify the Engineer of such in writing within 24 hours after delivery.

(a) Rubber Seals – Store rubber seals in a place which permits free circulation of air, maintains a temperature of 70 degrees F or less, and prevents the rubber from being exposed to the direct rays of the sun. Keep rubber seals free of oils, grease, and other materials which would deteriorate the rubber. Rubber seals shall not be distorted during handling.

50.5.3 SEQUENCING AND SCHEDULING

Submit a sequencing and scheduling plan, approved before the work is commenced, which illustrates that work affecting roadways has been coordinated with New York State DOT and New York City DOT. Include in the plan schedules, lists of labor or materials to be provided the affected agency, and any other aspects of the work that may impact on the operations of these entities as specified in the Contract requirements. The protection plan shall clearly demonstrate how all public or private roads, streets, or highways will be kept open to traffic at all times during the construction period, except as required to complete the Work and as shown on the NYCDOT OCMC traffic stipulations. The sequencing and scheduling plan must comply with all other Contract requirements such as warning signs, flagmen, permits, and debris removal.

50.5.4 FABRICATION

(a) Detail Drawings – Prior to performing any fabrication submit detailed shop drawings to the Engineer for approval. Submit detail drawings for metalwork and machine work, prior to fabrication, include within the detail drawings catalog cuts, templates, fabrication and assembly details and type, grade and class of material as appropriate. All temporary and tack welds shall be identified on the shop drawings. Each member shall be identified following the numbering scheme shown on the drawings. A table shall be provided containing a list of all members and a reference to each material certificate and test report that applies to that member. Shop drawings shall identify weld procedures and NDT required for each weld. Any and all splices shall be included in the shop drawings and clouded for approval. Indicate methods of protecting the work during shipping, storage, field assembly, and installation. Submit detail drawings of closure gates and appurtenant items, including fabrication drawings, etched pattern layout drawings, shop assembly drawings, delivery drawings, and field installation drawings.

(1) Fabrication Drawings – Fabrication drawings shall show complete details of materials, tolerances, connections, and proposed welding sequences which clearly differentiate shop welds and field welds.

(2) Etched Pattern Layout Drawings – Layout drawings shall show complete layout of etched pattern and graphics. Drawings to include etching profile and dimensions. Layouts to be coordinated with skin

plate sizes and pattern offsets at seams, welds, latches, seals, and related elements as shown on the drawings.

(3) Shop Assembly Drawings – Shop assembly drawings shall provide details for connecting the adjoining fabricated components in the shop to assure satisfactory field installation.

(4) Delivery Drawings – Delivery drawings shall provide descriptions of methods of delivering components to the site, including details for supporting fabricated components during shipping to prevent distortion or other damages.

(5) Field Installation Drawings – Field installation drawings shall provide a detailed description of the field installation procedures. The description shall include the location and method of support of installation and handling equipment; provisions to be taken to protect concrete and other work during installation; method of maintaining components in correct alignment; plan for prestressing gate leaf diagonals, which shall include descriptions of connections, riggings, anchorages, and measuring equipment; and methods for installing other appurtenant items.

(b) Structural Fabrication – Components shall be shop-fabricated of the materials specified and shown. Dimensional tolerances shall be as specified and shown. Splices shall occur only where shown. Pin holes shall be bored in components after welding, straightening, stress-relieving, and threading operations are completed. Brackets, eye bar sections, and other components requiring straightening shall be straightened by methods which will not damage the material. Bronze bushings shall be press-fitted with supporting components. Bolt connections, lugs, clips, or other pick-up assembly devices shall be provided for components as shown and required for proper assembly and installation.

Material must be straight before being laid off or worked. Perform straightening, if necessary, by methods that will not impair the metal. Sharp kinks or bends are cause for rejection of the material. Material with welds will not be accepted except where welding is definitely specified, indicated or otherwise approved. Make bends using approved dies, press brakes or bending rolls. Where heating is required, take precautions to avoid overheating the metal and allow it to cool in a manner that will not impair the original properties of the metal. Proposed flame cutting of material is subject to approval and must be indicated on detail drawings. Shearing must be accurate, and all portions of the work neatly finished. Make corners square and true unless otherwise shown. Fillet re-entrant cuts to a minimum radius of 3/4 inch unless otherwise approved. Provide finished members free of twists, bends and open joints. Tighten bolts, nuts and screws.

(1) Dimensional Tolerances for Structural Work – Measure dimensions using an approved calibrated steel tape of approximately the same temperature as the material being measured. The overall dimensions of an assembled structural unit must be within the tolerances indicated on the drawings or as specified in the particular section of these specifications for the item of work. Where tolerances are not specified in other sections of these specifications

or shown, an allowable variation of 1/32 inch is permissible in the overall length of component members with both ends milled; component members without milled ends must not deviate from the dimensions shown by more than 1/16 inch for members 30 feet or less in length, and by more than 1/8 inch for members over 30 feet in length.

(2) Structural Steel Fabrication – Structural steel may be cut by mechanically guided or hand-guided torches when approved by the Engineer, provided an accurate profile with a surface that is smooth and free from cracks and notches is obtained. Prepare surfaces and edges in accordance with AWS D1.1/D1.1M,

(3) Prequalification of WPSs Clause - Where structural steel is not to be welded, chipping or grinding will not be required except as necessary to remove slag and sharp edges of mechanically guided or hand-guided cuts not exposed to view. Chip, grind or machine to sound metal hand-guided cuts which are to be exposed or visible.

(c) Welding – Welds shall be in accordance with AWS D1.1/D1.1M, and of the type shown and approved detail drawings. Components shall be stress-relief heat treated after welding where shown. Stress-relieving of components shall be performed prior to the attachment of miscellaneous appurtenances.

(1) Welding Procedures for Structural Steel – Use prequalified welding procedures for structural steel as described in AWS D1.1/D1.1M, Prequalification of WPSs Clause or qualify by tests as prescribed in AWS D1.1/D1.1M, Qualification Clause. For welding procedures qualified by tests, the coupon welding and specimen testing will be witnessed and the test report document signed by the Engineer. Approval of any welding procedure does not relieve the Contractor of the responsibility for producing a finished structure meeting all requirements of these specifications. The Contractor will be directed or authorized to make any changes in previously approved welding procedures that are deemed necessary or desirable by the Engineer. Submit a complete schedule of welding procedures for each steel structure to be welded prior to commencing fabrication. Provide the schedule in conformance with the requirements specified in the provisions of AWS D1.1/D1.1M. Provide within the schedule detailed procedure specifications and tables or diagrams showing the procedures to be used for each required joint. Include in the welding procedures filler metal, preheat, interpass temperature and stress-relief heat treatment requirements. Clearly identify each welding procedure as being prequalified or required to be qualified by tests. Show types and locations of welds designated or in the specifications to receive nondestructive testing in the welding procedures.

(2) Welding Process – Perform welding of structural steel by an electric arc welding process using a method which conforms to the applicable provisions of AWS D1.1/D1.1M. Minimize residual stresses, distortion and shrinkage from welding.

(3) Filler Metal – Provide the electrode, electrode-flux combination and grade of filler metal conforming to the appropriate AWS specification for the base metal and welding process being used or be as shown where a specific choice of AWS specification allowable is required. Submit filler metal product data. Include the AWS designation of the electrodes to be used in the schedule of welding procedures. Use only low hydrogen electrodes for manual shielded metal-arc welding regardless of the thickness of the steel. Use a controlled temperature storage oven at the job site as prescribed by AWS D1.1/D1.1M, Fabrication Clause No 5 to maintain low moisture of low hydrogen electrodes.

(4) Preheat and Interpass Temperature – Perform preheating as required by AWS D1.1/D1.1M, Fabrication Clause or as otherwise specified except that the temperature of the base metal must be at least 70 degrees F. Slowly and uniformly preheat the joint area by approved means to the prescribed temperature, held at that temperature until the welding is completed and then permitted to cool slowly in still air.

(5) Stress-Relief Heat Treatment – Where stress relief heat treatment is specified or shown, perform in accordance with the requirements of AWS D1.1/D1.1M, Fabrication Clause unless otherwise authorized or directed.

(6) Workmanship – Perform welding workmanship in accordance with AWS D1.1/D1.1M, Fabrication Clause and other applicable requirements of these specifications.

(7) Preparation of Base Metal – Prior to welding inspect surfaces to be welded to ensure compliance with AWS D1.1/D1.1M, Fabrication Clause.

(8) Temporary Welds – Make temporary welds, required for fabrication and erection, under the controlled conditions prescribed for permanent work. Make temporary welds using low-hydrogen welding electrodes and by welders qualified for permanent work as specified in these specifications. Conduct preheating for temporary welds as required by AWS D1.1/D1.1M for permanent welds except that the minimum temperature must be 120 degrees F in any case. In making temporary welds, do not strike arcs in other than weld locations. Remove each temporary weld and grind flush with adjacent surfaces after serving its purpose.

(9) Tack Welds – Tack welds that are to be incorporated into the permanent work are to exhibit the same quality requirements as the permanent welds; clean and thoroughly fuse them with permanent welds. Perform preheating as specified above for temporary welds. Provide cascaded ends on multiple-pass tack welds. Remove defective tack welds before permanent welding.

(10) Weld Access Holes. Weld access holes (corner copes to prevent intersecting welds) shall be provided as shown on the shop drawings. If intersecting out-of-plane welds is encountered, the

fabricator shall notify the Engineer for the approval of additional weld access hole additions in such locations. Payment for the addition of weld access holes not shown on plans will be the Contractor's responsibility. Unless shown on the drawings, welds will be required to wrap the ends of weld access holes.

(11) Weld Backing Removal. Unless otherwise indicated, all weld backing material shall be removed from welded joints prior to testing. All weld backing material that cannot be removed shall be identified on the shop drawings.

(12) Weld Backing Material Other Than Steel. All weld backing material, other than steel, shall be qualified by testing and shall be included in submitted PQR/WPS. Variation from approved weld backing material will not be permitted and will require the development and testing a new weld procedure which addresses the change in backing material.

(13) Welding of Steel Studs – Welding of steel studs must conform to the requirements of AWS D1.1/D1.1M, Stud Welding Clause, except as otherwise specified for the procedures for welding steel studs to structural steel, including mechanical, workmanship, technique, stud application qualification, production quality control and fabrication and verification inspection procedures.

(14) Application Qualification for Steel Studs – As a condition of approval of the stud application process, submit certified test reports and certification that the studs conform to the requirements of AWS D1.1/D1.1M, Stud Welding Clause, certified results of the stud manufacturer's stud base qualification test, and certified results of the stud application qualification test as required by AWS D1.1/D1.1M, Stud Welding Clause, prior to commencing fabrication, except as otherwise specified.

(15) Production Control – Production control of stud welding must conform to the requirements of AWS D1.1/D1.1M, Stud Welding Clause, except as otherwise specified for quality control for production welding of studs. Weld studs on which pre-production testing is to be performed must be in the same general position as required on production studs (flat, vertical, overhead or sloping). If the reduction of the length of studs becomes less than normal as they are welded, stop welding immediately and do not resume until the cause has been corrected.

(16) Weldments – Portions of the structure include thick weldments where locked in thermal stresses may make final dimensions unstable. The Contractor is required to sequence the work and thermally stress relieve subassemblies of thick weldments such that final machining achieves stable specified dimensions and tolerances.

(17) Seal Welds – Seal welds are required as shown to maintain water tightness of weld joints and to prevent corrosion. All welds

shall be seal welds unless noted otherwise. All seal welds shall be shown and made as indicated on the shop drawings. Seal welds, without a specific size shown, shall be made the minimum size fillet weld as required in AWS D1.1/D1.1M. In addition, seal welds may require weld wrapping around reentrant corners that is specifically prohibited in AWS D1.1/D1.1M.

(d) Bolted Connections – Provide bolts, nuts and washers of the type specified or indicated. Equip all nuts with washers except for high strength bolts. Use beveled washers where bearing faces have a slope of more than 1:20 with respect to a plane normal to the bolt axis. Where the use of high strength bolts is specified or indicated, conform the materials, workmanship and installation to the applicable provisions of ASTM F3125/F3125M. Install High Strength Bolts ASTM F3125/F3125M Grade A325 or Grade A490 in accordance with the requirements of RCSC S348. All High Strength Bolted Connections are fully pretensioned to the minimum pretension as specified in RCSC S348. Follow the pre-installation verification procedures outlined in RCSC S348. All other bolted connections are snug tight in accordance with RCSC S348.

(1) Accurately locate bolt holes, smooth, perpendicular to the member and cylindrical.

(2) Drill or subdrill holes for regular bolts and ream in the shop and not more than 1/16 inch larger than the diameter of the bolt.

(3) Match-ream or drill holes for fitted bolts in the shop. Remove burrs resulting from reaming. Keep bolt threads entirely outside of the holes. The body diameter of bolts must have tolerances as recommended by ASME B4.1 for the class of fit specified. Place fitted bolts in reamed holes by selective assembly to provide an LN-2 fit.

(4) Holes for high strength bolts must not have diameters more than 1/16 inch larger than bolt diameters. If the thickness of the material is not greater than the diameter of the bolts, the holes may be punched. If the thickness of the material is greater than the diameter of the bolts the holes may be drilled full size or subpunched or subdrilled at least 1/8 inch smaller than the diameter of the bolts and then reamed to full size. Poor matching of holes will be cause for rejection. Drifting occurring during assembly cannot distort the metal or enlarge the holes. Reaming to a larger diameter of the next standard size bolt will be allowed for slight mismatching.

(e) Machine Work – Tolerances, allowances and gauges for metal fits between plain, non-threaded, cylindrical parts conform to ASME B4.1 for the class of fit shown or required unless otherwise shown on approved detail drawings. Tolerances for machine-finished surfaces designated by non-decimal dimensions must be within 1/64 inch. Sufficient machining stock must be provided on placing pads to ensure true surfaces of solid material. Provide finished contact or bearing surfaces true and exact to secure full contact. Polish journal surfaces and finish all surfaces with sufficient smoothness and accuracy to ensure proper operation when assembled. Accurately machine parts entering any machine and all like parts be interchangeable except that parts assembled together for drilling or reaming of holes or machining will not

be required to be interchangeable with like parts. Accurately locate all drilled bolt holes.

(1) Unfinished Surfaces – Lay out all work to secure proper matching of adjoining unfinished surfaces unless otherwise directed. Where there is a large discrepancy between adjoining unfinished surfaces chip and grind smooth or machine to secure proper alignment. Unfinished surfaces must be true to the lines and dimensions shown and be chipped or ground free of all projections and rough spots. Fill in depressions or holes not affecting the strength or usefulness of the parts in an approved manner.

(2) Pin Holes – Pin holes are to be bored true to gauges, smooth, straight and at right angles to the axis of the member. Do the boring after the member is securely fastened in position.

(3) Shafting – Turn or grind shafting with hot-rolled or cold-rolled steel, as required, unless otherwise specified or authorized. Provide fillets where changes in section occur. Cold-finished shafting may be used where keyseating is the only machine work required.

(4) Bearings – Bearings may be lined with bronze unless otherwise specified or shown. Where the bearing pressure is in excess of 200 psi, line bearings with bronze. Pressures on lined bearings must not exceed psi of projected area unless otherwise required or authorized. Anti-friction bearings of approved types and of sizes not less than those recommended by the bearing manufacturer for the duty intended will be permitted subject to approval. Properly align all bearings provided with a suitable means of lubrication. Install anti-friction bearings as required to provide for retention of the lubricant and to exclude dirt and grit.

(f) Etched Pattern – Exposed faces of gate skin plates to receive custom etched pattern as shown on the approved detail drawings. Etching to produce a smooth and continuous profile; gaps or skips in profile to be limited to 1/8” maximum. Profile to be at the width and depth indicated on the drawings; however, no etching to be more than 1/16” deep maximum.

(g) Miscellaneous Provisions – Apply zinc coatings in a manner and of a thickness and quality conforming to ASTM A123/A123M. Where zinc coatings are destroyed by cutting, welding or other causes regalvanize the affected areas. Regalvanize coatings 2 ounces or heavier with a suitable low-melting zinc base alloy similar to the recommendations of the American Hot-Dip Galvanizers Association to the thickness and quality specified for the original zinc coating. Repair coatings less than 2 ounces with cold galvanizing in accordance with ASTM A780/A780M.

(h) Drain holes – Locate drain holes as shown on the drawings, unless otherwise noted. Drain holes shall be drilled. Flame cutting of holes will not be permitted.

(i) Fabrications – Submit samples approved prior to use of the represented materials or items in the work. Samples of standard and shop fabricated items shall be full size and complete as required for installation in the work. Approved samples may be installed in the work provided each sample is clearly identified

and its location recorded. Fabrications shall conform to the following requirements.

(1) Gate Leaf – Gate leaf shall be of welded structural steel fabrication. Gate leaf shall be provided complete with hinge assemblies, pintle assembly, wheel assemblies, gate hooks, seal assemblies, and other appurtenant components as specified and shown. Proposed shop-fabrication of gate leaf in separate segments to facilitate handling and shipping must be approved and shall be as shown on approved detail drawings. Such segments shall permit easy field-assembly and shall be as few as practicable to minimize the number of joints to be field-welded. The overall height of gate leaf shall not vary from the nominal dimension by more than 1/4 inch. The surfaces of framing elements to skin plates are to be welded shall not vary from a true plane by more than 1/4 inch. The diagonal dimensions across the corners of both faces of the gate leaf shall not differ from the calculated dimensions based on gate dimensions shown in the drawings by more than 1/2 inch. Splices in skin plates shall be located only where shown. Etched pattern on skin plates to be appear continuous across plate spices; individual etched profiles of the pattern to be aligned within 1/8” across skin plate splices. In addition to welds specifically indicated for nondestructive testing, other welds as chosen by the Engineer in the girders, verticals and skin plate of the gate leaf shall receive nondestructive testing at the Contractor’s expense following the guidelines specified in Section 50.5.5(d)(8).

(2) Hinge Assembly –Materials for the hinge assembly shall follow the schedule shown in the plan. In addition to welds specifically indicated for nondestructive testing, 50 percent of the welds in the hinge assembly and the welds connecting the hinge assembly to the gate framing shall receive nondestructive testing utilizing Ultrasonic Testing. After all welding is completed, the hinge assembly shall be stress-relieved by heat-treating. Stress-relieving shall be performed prior to machining.

(3) Rolling Gate Wheel Assembly – Rolling gate wheel assembly shall be provided complete with cast steel wheels as specified herein and fittings, couplings and hoses for lubrication of wheels. Fittings shall be 1/4 inch threaded-pipe fitting. Couplings shall be 1/4-inch stainless steel half coupling. Hoses shall be 1/4 inch inside diameter, double-braided stainless steel flexible hoses. Couplings and hoses shall have a pressure rating of 3,000 psi.

(4) Seal Assembly – Seal assembly shall consist of rubber seals, steel retainer and spacer bars, retractable plate, and fasteners. Rubber seals shall be continuous over the full length. Seals shall be accurately fitted and drilled for proper installation. Bolt holes shall be drilled in the rubber seals by using prepared templates or the retainer bars as templates. Splices in seals shall be fully molded, develop a minimum tensile strength of 50 percent of the unspliced seal, and occur only at locations shown. All vulcanizing of splices shall be done in the shop. The vulcanized splices between molded

corners and straight lengths shall be located as close to the corners as practicable. Splices shall be on a 45-degree bevel related to the "thickness" of the seal. The surfaces of finished splices shall be smooth and free of irregularities. Steel retainer bars shall be field-spliced only where shown. Field welding of the steel retainer bar shall be ground flush.

(5) Miscellaneous Embedded Metals – Wall armor, shear anchors, protection and seal plates and shapes, and other miscellaneous embedded metals shall be of structural steel or corrosion-resisting steel conforming with the details specified herein and shown.

(j) Shop Assembly – Gates and appurtenant items shall be assembled completely in the shop, unless otherwise approved, to assure satisfactory field installation. Adjoining components shall be fitted and bolted together to facilitate field connections. The matchmarking of unassembled items shall be carefully preserved until the items are assembled. Mating surfaces and machined surfaces shall be covered with a rust preventive until assembly. Assembled components shall be shop-welded in their final positions as much as delivery and field installation conditions will permit. Rubber seals shall be fitted and drilled to match the seal retainers, match-marked, and removed for shipment. Shop assembly and disassembly work shall be performed in the presence of the Engineer unless waived in writing. The presence of the Engineer will not relieve the Contractor of any responsibility under this contract.

50.5.5 TESTS, INSPECTIONS, AND VERIFICATIONS

Submit certified test reports for material tests with all materials delivered to the site.

(a) General – Perform material tests and analyses certified by an approved laboratory to demonstrate that materials are in conformity with the specifications. These tests and analyses must be performed and certified at the Contractor's expense, and are in addition to the standard manufacturer's material test reports. Perform tests, inspections, and verifications conforming to the requirements of the particular sections of these specifications for the respective items of work unless otherwise specified or authorized. Conduct tests in the presence of the Engineer if so required. Furnish specimens and samples for additional independent tests and analyses upon request by the Engineer. Properly label specimens and samples and prepare for shipment. Submit certified test reports for material tests performed by the Contractor as well as manufacturers' material test reports with all materials delivered to the site.

(b) Nondestructive Testing – When doubt exists as to the soundness of any material part, such part may be subjected to any form of nondestructive testing determined by the Engineer. This may include Ultrasonic (UT), Magnetic Particle Testing (MT), Radiographic Testing (RT) or any other test that will thoroughly investigate the part in question. The cost of such investigation will be borne by the Department if the part is found to be sound and by the Contractor if the part is found to be defective. Any defects will be cause for rejection; replace and retest rejected parts at the Contractor's expense.

(c) Tests of Machinery and Structural Units – The details for tests of machinery and structural units must conform to the requirements of the particular sections

of these specifications covering these items. Assemble each complete machinery and structural unit and test them in the shop, in the presence of the Engineer, unless otherwise directed. Waiving of tests does not relieve the Contractor of responsibility for any fault in operation, workmanship or material that occurs before the completion of the contract or guarantee. After being installed at the site, operate each complete machinery or structural unit through a sufficient number of complete cycles to demonstrate to the satisfaction of the Engineer that it meets the specified operational requirements in all respects.

(d) Inspection of Structural Steel Welding – Nondestructive testing of designated welds will be required. Supplemental examination of any joint or coupon cut from any location in any joint may also be required. Selection of welds to be tested shall be as agreed upon between the Engineer and Contractor. The Contractor's Certified Welding Inspector (CWI) shall be present whenever welding is performed. The CWI shall perform inspection, as necessary, prior to assembly, during assembly, during welding, and after welding. CWI shall perform inspection as required in AWS D1.1/D1.1M.

(1) Visual Examination – All visual inspection shall be conducted in accordance with AWS D1.1/D1.1M, by a CWI. Document this inspection in the Visual Weld Inspection Log. Submit certificates indicating that CWI meet the requirements of AWS QC1.

(2) Nondestructive Testing – Perform as designated or described in the sections of these specifications, the nondestructive testing of shop and field welds covering the particular items of work. Record final nondestructive testing results in the Weld Inspection Log which identifies final NDT inspection of all welds requiring inspection and submit the log.

(3) Testing Agency – The nondestructive testing of welds and the evaluation of tests as to the acceptability of the welds must be performed by a testing agency adequately equipped and competent to perform such services or by the Contractor using suitable equipment and qualified personnel. All personnel performing nondestructive testing shall be certified Level I or II in the method of NDT being utilized in accordance with AWS D1.1/D1.1M. Level I inspectors must have direct supervision of a Level II inspector. Submit certification for nondestructive testing personnel prior to all testing. In either case, written approval of the examination procedures is required, and performance of the examination tests must be done in the presence of the Engineer. The evaluation of tests is subject to the approval and all records become the property of the Department.

(4) Radiographic Testing (RT) – Radiographic examination is required on the major shop and field welds as per AWS D1.5/D1.5M. See Section 50.5.5(d)(8) for items that shall be subjected to RT. Welds which have been designated to receive radiographic examination and are found to be inaccessible to a radiation source or film or are otherwise so situated that radiographic examination is not feasible may be examined, with written approval, by dye penetrant, magnetic particle tests, or ultrasonic tests.

(5) Ultrasonic Testing (UT) – Examine, evaluate and report ultrasonic testing of welds in conformance to the requirements of AWS D1.1/D1.1M, Inspection Clause, for statically loaded connections. Provide ultrasonic equipment capable of making a permanent record of the test indications. Make a record of each weld tested.

(6) Magnetic Particle Inspection Conform magnetic particle inspection of welds to the applicable provisions of ASTM E709.

(7) Dye Penetrant Inspection – Perform dye penetrant inspection of welds conforming to the applicable provisions of ASTM E165/E165M.

(8) Welds to be Subject to Nondestructive Testing – 100% of all welds shall be subjected to visual inspection. All welds connecting the Fracture Critical Member (FCM), including all girders, shall be considered Fracture Critical Weld (FCW) and shall be subjected to Radiographic Testing (RT). 50% of the welds including FCW on the hinge assembly shall be subjected to UT. In addition, test 25% of all other Complete Joint Penetration (CJP) welds using RT. Randomly test 50% of all PJP and fillet welds other than FCW using UT as per Table 6.2 of AWS D1.1/D1.1M.

(9) Test Coupons – The Department reserves the right to require the Contractor to remove coupons from completed work when doubt as to soundness cannot be resolved by nondestructive testing. When coupons are removed from any part of a structure, repair the members cut in a neat manner with joints of the proper type to develop the full strength of the members. Peen repaired joints as approved or directed to relieve residual stress. The expense for removing and testing coupons, repairing cut members and the nondestructive testing of repairs is borne by the Department if the work is not found to be defective or the Contractor if the work is found to be defective.

(10) Supplemental Examination – When the soundness of any weld is suspected of being deficient due to faulty welding or stresses that might occur during shipment or erection, the Department reserves the right to perform nondestructive supplemental examinations before final acceptance. The cost of such inspection will be borne by the Department. If welds are found to be defective, the Contractor shall repair the defective work and bear the cost of the inspection.

(11) Welding Repair Plan – Repair defective welds in accordance with AWS D1.1/D1.1M, Fabrication Clause. Remove defective weld metal to sound metal by use of grinding, air carbon-arc or oxygen gouging. Thoroughly clean surfaces before welding. Retest welds that have been repaired by the same methods used in the original inspection. Except for the repair of members cut to remove test coupons and found to have acceptable welds costs of repairs and retesting will be borne by the Contractor. Submit welding repair plans for steel, prior to making repairs.

(12) Inspection and Testing of Steel Stud Welding – Perform fabrication and verification inspection and testing of steel stud welding conforming to the requirements of AWS D1.1/D1.1M, Welding Clause except as otherwise specified. The Engineer will serve as the verification inspector. Bend or torque test one stud in every 100, including studs that do not show a full 360 degree weld flash, have been repaired by welding or whose reduction in length due to welding is less than normal as required by AWS D1.1/D1.1M, Stud Welding Clause. If any of these studs fail, bend or torque test two additional studs. If either of the two additional studs fails, all of the studs represented by the tests will be rejected. Studs that crack under testing in the weld, base metal or shank will be rejected and replaced by the Contractor at no additional cost.

(e) Testing of Rubber Seals – The fluorocarbon film of rubber seals shall be tested for adhesion bond in accordance with ASTM D413 using either the machine method or the deadweight method. A 1-inch long piece of seal shall be cut from the end of the seal which has been masked and subjected to tension at an angle approximately 90 degrees to the rubber surface. There shall be no separation between the fluorocarbon film and the rubber when subjected to the following loads:

Thickness of Fluorocarbon Film	**Machine Method at 50 mm2 inches per minute**	**Deadweight Method**
0.060 inch	30 pounds per inch width	30 pounds per inch width
0.030 inch	30 pounds per inch width	30 pounds per inch width

50.5.6 INSTALLATION

Gates and appurtenant items shall be assembled for installation in strict accordance with the contract drawings, approved installation drawings, and shop match-markings. Before assembly and installation, all bearing surfaces requiring lubrication shall be thoroughly cleaned and lubricated with an approved lubricant. All components to be field-welded shall be in correct alignment before welding is commenced.

(a) General – Thoroughly clean all parts to be installed. Remove packing compounds, rust, dirt, grit and other foreign matter. Clean holes and grooves for lubrication. Examine enclosed chambers or passages to make sure that they are free from damaging materials. Where units or items are shipped as assemblies they will be inspected prior to installation. Disassembly, cleaning and lubrication will not be required except where necessary to place the assembly in a clean and properly lubricated condition. Do not use pipe wrenches, cold chisels or other tools likely to cause damage to the surfaces of rods, nuts or other parts used for assembling and tightening parts. Tighten bolts and screws firmly and uniformly but take care not to overstress the threads. When a half nut is used for locking a full nut place the half nut first followed by the full nut. Apply the half nut snug tight before applying full torque on the full nut. Lubricate threads of all bolts except high strength bolts, nuts and screws

with an appropriate lubricant before assembly. Coat threads of corrosion-resisting steel bolts and nuts with an approved antigalling compound. Driving bolts or keys will not be permitted.

(b)

(1) Alignment and Setting – Accurately align each machinery or structural unit by the use of steel shims or other approved methods so that no binding in any moving parts or distortion of any member occurs before it is fastened in place. The alignment of all parts with respect to each other must be true within the respective tolerances required. Set true machines to the elevations shown.

(2) Blocking and Wedges – Remove all blocking and wedges used during installation for the support of parts to be grouted in foundations before final grouting unless otherwise directed. Blocking and wedges left in the foundations with approval must be of steel or iron.

(c) Embedded Metals – Corner protection angles, sill angles, seal plates, frames, pedestals, bases and other embedded metal items required for proper and complete installation shall be accurately installed to the alignment and grade required to ensure accurate fitting and matching of components. Embedded metals shall be given a primer coat of the required paint on all surfaces prior to installation in concrete forms. Anchors for embedded metals shall be installed as shown. Items requiring two concrete pours for installation shall be attached to the embedded anchors after the initial pour, adjusted to the proper alignment, and concreted in place with the second pour. Welded field splices in sealing surfaces of embedded items shall be ground smooth.

(d) Lower Hinge Assembly – Base anchors for the lower hinge assembly shall be embedded in the first pour concrete. Base plate shall be attached to base anchors, set to the final position, and epoxy fill shall be placed in the void behind the base plates and allowed to reach the strength as shown and the approved field installation drawings. After the gate leaf is set in place, the hinge assembly shall be adjusted to provide for continuous contact between the sealing surfaces over the full height and length of the gate leaf. Allowances shall be made for the seals which shall not be attached until painting operations are completed. Second pour concrete shall be placed after final adjustments are completed.

(e) Gate Leaf – Gate leaf components not assembled in the shop shall be assembled in the field as required for installation. Lower hinge assembly bearings shall be coated with grease prior to setting the gate leaf in place. All necessary precautions shall be taken to avoid distortion of the gate leaf or any component parts. Special care shall be exercised during installation to prevent any sag of the ends of the gate leaf due to compression of blocking or other causes. After the gate leaf has been set in place and the top hinge assembly installed, the gate leaf shall be plumbed and brought into correct position.

(f) Diagonals – Gate leaf diagonals shall be attached to the gate leaf after the leaf is set in place. Submit diagonal prestressing records immediately after completion of the prestressing operations. Diagonals shall be prestressed before the final adjustment of the hinge assemblies are made. Diagonal

prestressing shall be as specified herein and as shown and the prestressing plan developed by the Contractor. The prestressing plan shall be submitted to the Engineer for approval. The plan for prestressing the diagonals shall describe the method of prestressing including the materials, connections, rigging, anchorages, and measuring equipment including strain gauges. The strain gauges shall be removed after the prestressing operation and touch up painting shall be applied. Compile a record of the prestressing operations consisting of the information indicated in the following table:

Stress Data Table

Gate Leaf Location:				Date:	
	1	2	3	4	5
Diagonal	Strain Gauge Initial	Strain Gauge Final	E (in.)	D (in.)	d(in.)

1. Initial strain gauge readings shall be made after slack is removed.

2. Final strain gauge readings shall be made after prestressing is complete.

3. E is the total elongation over the full length of the diagonal, computed from the strain gauge readings.

4. D is the initial deflection (sag) of the leaf prior to prestressing.

5. d is the final deflection (sag) of the leaf measured after completion of the prestress operation; it is the deflection at the bottom of the cantilever end when final strain gauge readings are taken.

(g) Top Hinge Assembly – After the gate leaf has been set in place, the top hinge assembly shall be installed and adjusted so that the center of the hinge pin is in vertical alignment with the center of the pintle. When the top hinge pin is inserted, the gate leaf shall swing horizontally throughout its range of movement. Any required final adjustments to the top hinge assembly shall be made after the gate leaf diagonals have been prestressed. The second pour concrete shall be made after final adjustments are completed.

(h) Painting – Painting of the gates shall follow NYSDOT Standard Specification Section 708-01, Structural Steel Paints Class 1. Exposed parts of gates and appurtenances except machined surfaces, corrosion-resistant surfaces, surfaces of anchorages embedded in concrete, and other specified surfaces shall be painted as specified below

(1) Blast to near white metal (SSPC-SP 10).

(2) Prime with one coat of three component, metallic, zinc rich, epoxy primer.

(3) Coat with two (2) coats of low VOC, high solids, high build epoxy intermediate coat.

(4) Finish with one coat of low VOC, high build, semi-gloss urethane finish.

(5) Gate colors to be NYC DOT Bridges Standard Colors: Gates 1-17 to be Munsel Gray FS 26173; Gate 18 to be the similar color as George Washington Bridge. Gate numbering shall follow table as shown on plan sheet FG001.

(i) Seal Assemblies – Rubber seal assemblies shall be installed after the embedded metal components have been concreted in place and the gate installation, including painting, completed. Rubber seals shall be fastened securely to metal retainers. Before operating the gates, a suitable lubricant as prescribed by the seal manufacturer shall be applied to the rubber seal rubbing plates to protect the rubber.

(j) Final Adjustment of Swing Gates – Swing gates have been designed with multiple degrees of adjustment. The pintle assembly has been designed to allow additional thrust washers to allow vertical adjustment. Shim packs have been specified to allow adjustment normal to the concrete abutment surface. Slotted holes have been provided in all seal angles to facilitate minor adjustments normal to the seal surfaces. The bearing blocks of each gate, attached to the horizontal girders, shall be in contact with the vertical face of the concrete abutment or embedded plates. If not in contact, the bearing blocks shall have a gap no larger than 1/32” measured by a feeler gauge between the bearing block and mating surface. Should the gap between the bearing blocks and mating surface exceed 1/32”, the Contractor shall notify the Engineer. After all adjustments have been made, the seals of each gate shall be leak tested as specified herein.

(k) Testing of Seal – There shall be no inadvertent leakage paths around the seals. The intent of this specification is that the bulb of the J-bulb seal shall be in contact with the seal plate over the entire length when the gate is in the closed position.With the gate in the closed position, the spray from a hose shall be directed along every horizontal and vertical inch of the seal at the contact point between seal bulb and seal plate. The nozzle of the hose may be directed toward either side of the seal but shall be no more than 12 inches from the contact point between seal and seal plate. The spray shall be as nearly perpendicular to the seal as access permits. The flow of water from the hose shall be no less than 8 gallons per minute and the water pressure in the hose just upstream of the nozzle shall be no less than 40 psi, as measured by a calibrated gauge. If leakage occurs at any point along the seal, the gap between the rubber seal and seal plate shall be measured by means of feeler gauges while the water is not running. A maximum gap of 1/16 inch over not more than 12 inches will be accepted.

50.5.7 PROTECTION OF FINISHED WORK

(a) Machined Surfaces – Thoroughly clean foreign matter off machined surfaces. Protect all finished surfaces. Oil and wrap unassembled pins and bolts with moisture resistant paper or protect them by other approved means. After applying primer wash finished surfaces of ferrous metals to be in bolted

contact, with an approved rust inhibitor and coat them with an approved rust resisting compound for temporary protection during fabrication, shipping and storage periods. Paint finished surfaces of metals which will be exposed after installation, except corrosion resisting steel or nonferrous metals.

(b) Lubrication After Assembly – After assembly fill all lubricating systems with the appropriate lubricant and apply additional lubricant at intervals as required to maintain the equipment in satisfactory condition until acceptance of the work.

50.5.8 ACCEPTANCE TRIAL OPERATION

After completion of the gate installation, the Engineer will examine the gates for conformance with the contract requirements. The gates will be examined first to determine whether or not the workmanship conforms to the specification requirements and the standard of Painting and corrosion protection. The Contractor will then be required to operate the gates from the fully-opened to the fully-closed position to demonstrate that all parts are functioning properly. The number of error-free gate opening-closing operations, acceptable to the Engineer's satisfaction, shall follow the guidelines below.

(a) Swing Gates – Operate at least once using normal gate operating sequence and at least once using the alternative operating procedure. Refer to gate Operation & Maintenance (O&M) manual for details of operating procedures.

(b) Roller Gates – Operate at least once using normal gate operating sequence and at least once utilizing each of the two alternative operating procedures. Refer to gate O&M manual for details of operating procedures.

The workmanship in the fabrication and installation of gates shall be such that the gates in the closed position will form a watertight barrier across the opening, which shall be verified using a spray test. Required repairs or replacements to correct defects, shall be made at no additional cost to the Department. Repeat the trial operation after defects are corrected. Prior to final acceptance of the gates, provide temporary restraints to prevent unauthorized operation of the gates.

50.6 MEASUREMENT & PAYMENT.

Payment will be made at the lump sum price bid for each fabricated steel floodgate.

50.7 PRICE TO COVER.

Payment will constitute full compensation for furnishing all plant, labor, materials and equipment and performing all operations necessary for the installation of fabricated steel floodgates as specified and as shown in the drawings.

Payment will be made under:

Item No.	Item	Pay Unit
ESCR-50.A.1	FURNISH AND INSTALL FABRICATED STEEL FLOODGATE (VEHICULAR ROLLER TYPE)	L.S.
ESCR-50.A.2	FURNISH AND INSTALL FABRICATED STEEL FLOODGATE (VEHICULAR SWING TYPE)	L.S.
ESCR-50.K.1	FURNISH AND INSTALL FABRICATED STEEL FLOODGATE (VEHICULAR SWING TYPE)	L.S.
ESCR-50.K.2	FURNISH AND INSTALL FABRICATED STEEL FLOODGATE (VEHICULAR SWING TYPE)	L.S.
ESCR-50.K.5	FURNISH AND INSTALL FABRICATED STEEL FLOODGATE (VEHICULAR ROLLER TYPE)	L.S.
ESCR-50.K.6	FURNISH AND INSTALL FABRICATED STEEL FLOODGATE (VEHICULAR SWING TYPE)	L.S.

END OF SECTION

SECTION 619.3610 – QUICK-CHANGE MOVEABLE CONCRETE BARRIER TRANSFER VEHICLE (QMCBTV) - LEASE & MAINTAIN

619.3610.1. INTENT. This section describes leasing and maintenance of Quick-change Moveable Concrete Traffic Barrier Transfer Vehicle (Vehicle) For the purposes of this section, leasing of the vehicle refers to procuring the Vehicle and covers leasing, renting, and the use of a Contractor-owned Vehicle.

619.3610.2. DESCRIPTION. This item shall consist of procuring a Quick-change Moveable Concrete Traffic Barrier Transfer Vehicle which meets the requirements noted herein, from Lindsay Transportation Solutions (LTS); 180 River Road, Rio Vista, CA 94571; (888) 800-3691; www.barriersystemsinc.com or approved equal. The item shall also include maintaining the Vehicle, and training Vehicle operators.

619.3610.3. MATERIALS. The Vehicle shall be on the project site and in good working condition. The Vehicle is capable of performing the following functions:

1. Lateral transfer of continuous lengths of Quick-change Moveable Concrete Barrier (QMCB) from 4 feet to 18 feet;
2. Maintaining a forward speed of at least 5 miles per hour while making lateral transfer moves of the QMCB.
3. The Vehicle is equipped with a Capstan Drive and an engine block heater.

619.3610.4. METHODS. The Contractor is responsible for obtaining or entering into an agreement to procure the Vehicle within 30 days upon notification by the Engineer.

1. General:
   The Vehicle designated for use under this item will be used on FDR Drive to facilitate a work zone protection for the limits specified on contract drawings, including lateral movement of QMCB, during the work hours specified in contract documents and approved by Engineer. Each work shift, the Vehicle will be used twice, first to deploy the QMCB prior to work hours, and then to relocate the QMCB back to its stored position.

2. Maintenance:
   The Vehicle shall be stored, when not in use, in an approved storage area. The Contractor shall be required to perform all maintenance operations recommended by the manufacturer of the Vehicle.

   The Vehicle shall be kept in good repair at all times. The Contractor shall expedite repairs necessitated by malfunction of or damage to the Vehicle. Maintenance shall include the periodic cleaning of the Vehicle along with the repair of damage to the protective coating of the Vehicle.

   The Contractor shall have on hand at all times sufficient spare parts.

619.3610.5. PRICE TO COVER. The cost, including labor, materials and equipment needed to complete the work and keep the Vehicle in a functional state must be included in the price bid for Item 6.70, Maintenance and Protection of Traffic.

END OF SECTION

SECTION 619.3614 – QUICK-CHANGE MOVEABLE CONCRETE BARRIER (QMCB) – PURCHASE OR LEASE & MAINTAIN

619.3614.1. INTENT. This section describes purchasing or leasing, maintaining, and deployment of Quick-change Moveable Concrete Barrier (QMCB)

619.3614.2. DESCRIPTION. Under this work the Contractor shall purchase or lease, maintain, load, unload, transport, and store the QMCB, including any Quick-Lock Variable Length Barrier (QVLB), as indicated on the contract drawings or as ordered by the Engineer.

619.3614.3. MATERIALS. The Barrier is a patented product and shall be obtained from Lindsay Transportation Solutions, (180 River Road, Rio Vista, CA 94571; Phone 888-800-3691; www.barriersystemsinc.com) or approved equal.

619.3614.4. METHODS. Barriers will be manufactured by either the wet cast or dry cast methods. Minimum concrete 28-day compressive strength shall be 4 ksi. All surface voids or rock pockets shall be repaired.

The QMCB, when installed in accordance with the manufacturer's instructions, shall be able to resist the impact of vehicles in accordance with the National Cooperative Highway Research Program Report 350 (NCHRP 350) Test Level 3.

The maximum outside dimensions of the QVLB shall not exceed the outside dimensions of the standard Quick-change Moveable Concrete Barrier. The minimum outside cross sectional dimensions of the QVLB inner shell shall not be less than the QMCB dimensions by more than 1 inch at any location. The hinges utilized on the QVLB shall be similar to the hinges used on the remainder of the system. The longitudinal strength of the QVLB under impact shall be consistent with the strength of the standard Quick-change Moveable Concrete Barrier.

The QMCB and QVLB shall be loaded, unloaded and transported to the site as per the Manufacturer's instructions.

619.3614.5. PRICE TO COVER. The cost, including labor, materials and equipment needed to complete the work must be included in the price bid for Item 6.70, Maintenance and Protection of Traffic.

END OF SECTION

SECTION 619.37 – QUICK-CHANGE MOVEABLE CONCRETE BARRIER (QMCB) – OPERATION

619.37.1. INTENT. This section describes lateral movement of Quick-change Moveable Concrete Barrier (QMCB)

619.37.2. DESCRIPTION. Under this work, the Contractor shall furnish, assemble the run, maintain, and remove Quick-change Moveable Concrete Barriers, at the locations and schedules specified in the contract documents, including the lateral movement of the QMCB from the stored position to the construction activity position and from the construction activity position to the stored position as shown on the plans or as ordered by the Engineer. The cost of providing the operators for the Moveable Barrier Transfer Machine shall be included under this item.

619.37.3. MATERIALS. The Quick-change moveable barriers shall be manufactured by Barrier Systems, Inc. (180 River Road, Rio Vista, CA 94571; Phone 888-800-3691; www.barriersystemsinc.com) or approved equal. The maximum deflection at NCHRP 350 Test Level 3 shall be 28 inches or less. The barrier segments shall be 32 inches high and 18 inches wide at the base. Each barrier segment shall have a six (6) inch wide, continuous yellow painted stripe applied to the lower six (6) inches of barrier face, prior to installation. The stripe shall be applied along the lower six (6) inches of each exposed face for the full length of the barrier segment. The stripe shall be reflectorized meeting the requirements of **Section 6.44** of the Standard Specifications. The moveable barriers shall be fully compatible with the moveable barrier transfer machine.

619.37.4. METHODS. The contractor shall install and move the barriers in accordance with the manufacturer's instructions to locations and schedules as shown in the Contract Documents. Where specified on the Plans, the permanent traffic barriers shall be removed and replaced with deployed QMCB prior to start of work zone operations.

Prior to set-up, the Contractor shall provide the following to the Engineer for approval:

1. Manufacturer's certification that the Barriers are NCHRP 350 approved and meets Test Level 3 conditions.
2. Shop drawings and weight of the barrier pieces.
3. Installation and maintenance details.

The Engineer will inspect the barrier following installation, after each impact, and periodically throughout the duration of the work. Any barrier segment having damage or defect that will adversely affect the performance of the barrier shall be repaired or replaced, within 24 hours, by the Contractor at no additional cost to the City.

Prior to each lateral movement of the QMCB, the Contractor shall give the Engineer ample notice as to when such movement will begin. Minimum movement for payment is 10 feet and anything less than this shall be considered as an incidental movement and shall be included under the price bid for this item. Incidental movement of the barrier to achieve proper alignment or to realign barrier sections disturbed by traffic shall also be included in the price bid.

Once contract work requiring the Quick-change Moveable Barriers is completed, the contractor shall promptly remove the barriers from the work site.

619.37.5. PRICE TO COVER. The cost, including labor, materials and equipment needed to complete the work must be included in the price bid for Item 6.70, Maintenance and Protection of Traffic.

END OF SECTION

SECTION ESCR 6.25 GS - GREENWAY REROUTING SIGNS

SECTION ESCR 6.25 GSX – REMOVE GREENWAY REROUTING SIGNS

ESCR 6.25.1. DESCRIPTION. The work shall consist of the fabrication, furnishing, installation, and maintenance of temporary Greenway detour signs required to properly stage the work and maintain bicycle traffic. The work shall include the furnishing of signs, and sign posts, including all accessories; installation of signs and sign posts, including footings, at locations specified on the Contract Plans and as directed by the Engineer; and the maintenance, removal and disposal of temporary detour signs.

ESCR 6.25.2. MATERIALS. All materials and the details of fabrication and assembly shall be as shown on the Contract Drawings, outlined in the Special Provisions, and in accordance with the applicable standards of the New York City Department of Transportation, Division of Traffic Operations or the National Manual on Uniform Traffic Control Devices for Streets and Highways (National MUTCD), 2009 or latest Edition, where applicable, the following requirements, and as approved by the Engineer.

(A) Sign shall be made of flat unpainted Aluminum, Alloy 6061-T6 or approved equivalent, of the thickness 0.025”.

No painted signs will be permitted and all orange reflective sheeting applied to rigid substrates shall be one of the following listed fluorescent orange reflective sheeting materials or an approved equal:

> Scotchlite Durable Fluorescent Diamond Grade Sheeting 3924 F/G Orange as manufactured by the 3M Company, Traffic Control Materials Division. Diamond shaped signs shall use 3924F reflective sheeting. Square or rectangular shaped signs shall use 3924G reflective sheeting.
>
> Stimsonite Florescent Orange High-Performance Grade Retroreflective Sheeting No. 4380.

Approved reflective sheeting shall be installed in accordance with the manufacturer's written instructions, and to the satisfaction and approval of the Engineer.

(B) Posts shall be of the steel rail type, furnished with a baked green alkyd resin, without anchor plates and shall be rolled from material meeting the requirements of ASTM Designation A 499.

(C) Concrete for footings shall be Class B-32, Type IIA; cement - Type II Portland; sand - Type 1A; coarse aggregate Type 1, Grade B, or Type 2, Size No. 57; and an approved air-entraining agent shall be added at the time that concrete is mixed. Concrete, cement and aggregate shall comply with the requirements of Section 3.05.

(D) All other unspecified materials shall be approved by the Engineer.

ESCR 6.25.3. METHODS.

(A) SIGNS
All greenway rerouting signs used during the construction period are to be furnished by the Contractor, as required. The Contractor shall install these signs where indicated on the plans and as directed by the Engineer, and, when no longer required, shall remove these signs and dispose.

(B) INSTALLATION OF SIGNS

The erection of a sign shall include all work necessary to secure the sign to the sign post, including the furnishing and installation of clamps, brackets, and all necessary appurtenances and the attachment of the sign in the prescribed location and alignment, as indicated on the Contract Drawings. The erection of the signs shall comply with the applicable details of Drawing Nos. SD-225A, SD-225B and SD-225F of the Division of Traffic Operations, and the directions of the Engineer.

All signs shall be erected plumb and facing in the proper direction and angle as directed by the Engineer. The use of wire, twine or other similar temporary measures to fasten the signs to the post will not be permitted.

The back of each sign shall be clearly labeled with the Contractor's Company Logo, the Agency Name (NYCDDC) and the Contract Number, each from 1-1/2 to 2 inches in height, as approved by the Engineer.

(C) SIGN POSTS

All sign posts of the steel rail type furnished shall be of a uniform, modified, flanged channel section such that the area of contact between the post and the sign is symmetrical with the vertical axis of sign and posts.

The minimum dimensions of posts shall be as follows:

Width of Flange Face	Width of Back	Depth from Face of Flange to Back
3-1/2"	1-7/8"	1-3/4"

The minimum weight of each post before holes are punched shall be 3.0 pounds per foot. There may be a weight tolerance of plus or minus 5%.
The length shall be 12'- 0" with a tolerance of plus or minus one inch.

All posts shall be punched with 3/8" diameter holes on the centerline spaced at 1" centers beginning 1" from top of post for the entire length.

The finished posts shall be machine straightened and have a smooth uniform finish free from cracks, flaws, injurious seams, laps, blisters, ragged, sharp and imperfect edges, or other defects affecting strength, durability, or appearance. Bolt holes of the diameter specified shall be accurately spaced vertically and centered horizontally, so that the holes will register for back to back application. All holes and sheared ends shall be free from burrs.
All posts shall be painted with a weather-resistant, rust-inhibitive, high-quality, dark green enamel, which shall produce hard, mar-resistant coating, free from paint cracks, blisters or other defects.

Before painting, all posts shall be thoroughly cleaned of all dirt, rust, loose scale, oil or grease. The quality of the paint and prior preparation shall be such that when the finished post is struck a light blow with a sharp tool, the paint shall not crack or chip, and if scratched with a knife, shall not powder. The minimum thickness of the dry film enamel shall be one mil. It shall pass a standard 100 hour salt spray test (20% solution by spray or fog at 70 degrees). Painting shall be the final process after fabrication and punching has been completed.

(D) INSTALLATION OF SIGN POSTS

1. General. The work to be done shall be the installation of sign posts of the steel rail type only. The posts shall be installed in existing sidewalk, or earth. The work shall include excavation, backfilling, the restoration of the sidewalk, and the placement of concrete footing for the posts.

2. Installation Method. The installation of steel rail type sign posts shall be done in accordance with the details shown on the appropriate Division of Traffic Operations Standard Drawings Nos. SG-104, SG-105, SG-104B, or SG-105B. The Contractor may elect to set the sign post in concrete foundation as shown on the Standard Drawings, as modified by the Engineer.

3. Concrete Footing for Posts. The Contractor shall cut a neat hole in the sidewalk or earth, and excavate to the required depth, then pour the concrete and install the sign post in the fresh concrete, as shown on the D.T.O Standard Drawings. Where the sidewalk is made of brick paver, the concrete footings shall be poured prior to installation of the brick paver sidewalk. The concrete mix and placement shall meet the requirements of Section 3.05 and 4.06 respectively. The exposed surface shall be troweled to a neat, smooth finish, sloped to provide drainage away from the post.

The Contractor shall dispose of all unused fill and other materials, leaving the site in a clean and neat condition. The Contractor must also restore sidewalk areas which have been disturbed, in a neat and workmanlike manner, to the satisfaction of the Engineer.

To protect the restored sidewalk areas from mutilation, the Contractor shall use a temporary protective disc of cardboard, of sheetmetal, or other satisfactory method, and remove same when concrete is cured as determined by the Engineer.

(E) REMOVAL OF SIGNS

The removal of a sign shall include all work necessary to detach the sign from the sign post, including disassembling of clamps, brackets, and all appurtenances, and cutting and removal of the sign post to a minimum one (1) inch below the surface. The work shall also include restoration of sidewalk areas which have been disturbed to the satisfaction of the Engineer. Removed sign panels, attachment assemblies and sign posts shall become a property of the Contractor.

ESCR 6.25.4. PRICE TO COVER. The cost, including labor, materials, plant, equipment, and incidentals necessary to install the post on sidewalk or earth, to excavate and backfill for footing, to place the concrete footing, remove the temporary signs, and to restore all disturbed areas, shall be included under Item 6.70 Maintenance and Protection of Traffic.

END OF SECTION

SECTION 6.34 T – TEMPORARY CHAIN LINK FENCE AND GATE

6.34T.1. DESCRIPTION

Under this section, the Contractor must furnish, erect, maintain, and remove, when directed, each type of Temporary Chain Link Fence and Gate as shown on the Contract Drawings and directed by the Engineer.

6.34T.2. MATERIALS AND METHODS

All materials and methods shall be as specified in Section 6.34 of the Standard Highway Specifications, with the following modifications and additions:

Temporary Chain Link Fence and Gate to be furnished under Item Section 6.34 ACT, shall consist of chain link fence fabric, top and bottom tension wires, gates, posts to be embedded in the pavement, and all necessary incidental in accordance with the Contract Drawings and the directions of the Engineer.

Temporary Chain Link Fence to be furnished under Item 6.34 ACTP, shall consist of chain link fence fabric, top and bottom rails for mounting a decorative mesh (to be furnished under another item), gates, posts with steel plate footings, sand bags to hold fence in place, and all necessary incidental in accordance with the Contract Drawings and the directions of the Engineer.

When directed by the Engineer, the Contractor must remove and dispose of the temporary chain link fence to the satisfaction of the Engineer. The Contractor must then fill any holes left in the pavement with compacted clean sand to grade.

6.34T.3. PRICE TO COVER

The cost, including labor, materials and equipment needed to complete the work of this Section must be included in the price bid for Item 6.70, Maintenance and Protection of Traffic.

No separate payment will be made for Items 6.34 ACT, 6.34 ACTP, 6.34 BCT, 6.34 ADT, and 6.34 BDT; the costs must be included in the price bid for Item 6.70, Maintenance and Protection of Traffic.

END OF SECTION

SECTION 9.06 HW - ALLOWANCE FOR DECORATIVE MESH FABRIC

9.06 HW.1. DESCRIPTION.

Under this section, the Contractor will be paid to furnish and install panels of breathable mesh fabric upon which art work is printed in a maximum of four (4) colors, as directed by the Engineer. Each panel must be mounted on the construction barrier identified by the Engineer, typically Temporary Chain Link Fence (Item No. 6.34 ACTP), Fencing (Item No. 70.31), or metal Pedestrian Barricade identified by the Engineer (Item No. 7.36), unless an alternate method of mounting the panels is proposed by the Contractor and approved by the Engineer.

At the completion of the work the panels must be uninstalled and delivered to the Engineer, unless otherwise directed. Panels must remain the property of the City, unless otherwise directed.

9.06 HW.2. MATERIALS

A. Artwork. Contractor must engage the services of an Artist selected by the City. The Artist, in consultation with the Engineer and DDC's Public Art Unit must develop the artwork.

B. Mesh Fabric Panels. Fabric must be a breathable mesh fabric, with metal grommets installed at a one (1) foot maximum spacing around the perimeter of the fabric. Fabric panels must have sufficient air vent slits (u-cuts) to prevent overturning of the fence or barricade that it is mounted to. Slits must be approximately 6" wide semi-circles, spaced no further than 2' on center, staggered vertically. Slit edges to be electrically cauterized to prevent fraying. Slit and grommet locations must be shown on the shop drawings.

C. Submittals. Contractor must submit to the Engineer for approval, in consultation with DDC's Public Art Unit:

□□ Final Artwork package (provided by the Artist) for printing panels;
□□ Shop Drawings for each panel, showing artwork, grommets, and air vent slits;
□□ Samples and catalog cuts for fabric panel material;
4□ Name and qualifications of printing company that will prepare the panels.

9.06 HW.3 PRICE TO COVER

The lump sum payment made under this item must be equal to the sum total of all invoices submitted by the Contractor, as approved by the Engineer, for design of artwork, furnishing and installing decorative mesh fabric materials, to the satisfaction of the Engineer, plus an allowance of 12% overhead and 10% profit.

The total estimated cost of this item is the "fixed sum" amount shown for this item in the Bid Schedule and must not be varied in the bid. No guarantee is given that the actual lump sum cost for this item will in fact be the "fixed sum" amount. The "fixed sum" amount is included in the bid solely to ensure that sufficient monies will be available to

pay the Contractor for this work, which may be more or less than the fixed amount. This "fixed sum" amount must be included with the other amounts bid by the Contractor for all the other items under this contract.

The unit price must cover the cost of all labor, materials, equipment, insurance, and incidentals necessary to complete the work under this section in accordance with the drawings, the specifications and the directions of the Engineer.

Payment will be made under:

Item No.	Item	Pay Unit
9.06 HW	Allowance for Decorative Mesh Fabric	F.S.

END OF SECTION

(NO TEXT ON THIS PAGE)

BRIDGES - PAGES

SPECIAL BRIDGES SPECIFICATIONS

CONTRACT SANDRESM1

The specifications in the BRIDGES-Pages cover the procurement, fabrication, and construction of three pedestrian bridges across the FDR Drive to East River Park at Corlears Hook, Delancey Street construction, and East 10th Street Bridges; the procurement, fabrication, and construction of the Houston Street overpass; and Lead Paint Removal from bridges.

The BRIDGES-Pages supplement the specifications shown on the Specifications and Standards of New York City sheet at the beginning of this Volume 3, which apply to the work except as modified in these Contract Documents.

(NO TEXT ON THIS PAGE)

TABLE OF CONTENTS

Section **Description** **Page No.**

ESCR-13 Architectural Concrete Textured Finishes
See FLOODWALL-Pages for Section ESCR-13, which applies to the work covered in the BRIDGES-Pages

ESCR-76.11 Construction Report
See FLOODWALL-Pages for Section ESCR-76.11, which applies to the work covered in the BRIDGES-Pages

ESCR-76.21 Monitoring and Post-Construction Report
See FLOODWALL-Pages for Section ESCR-76.21, which applies to the work covered in the BRIDGES-Pages

PK-ESCR 715A Chain Link Fence Sliding Gate at East River Housing
See FLOODWALL-Pages for Section PK-ESCR 715, which applies to the work covered in the BRIDGES-Pages

Section 564.02010211 – Bridge Hanger Assemblies 1
Section 572.0002NN01 – Metalizing..... 8
Section 619.70040011 – Protective Safety Shielding Over Highway ..... **Error! Bookmark not defined.**
Section 619.70040011 - Protective Safety Shielding Over Highway 16
Section NYC-180002 – Metal Architectural Mesh..... 17
Section ESCR 570 – Concrete Deterrent Furniture 20
Section 832 – Specification for Lead Paint Removal from Bridges..... 28

(NO TEXT ON THIS PAGE)

SECTION 564.02010211 – BRIDGE HANGER ASSEMBLIES

DESCRIPTION

This work shall include fabricating, transporting and erecting bridge hanger assemblies as shown on the plans and in accordance with the provisions of the Contract Documents. Each hanger assembly shall include the one structural strand and the associated sockets, threaded anchor rods, pins, nuts, washers, pivot plates, pin caps and appurtenances, and all field adjustments to hanger tension and roadway profile grade required or ordered. Within 7 days of Notice to Proceed, the Contractor must notify the Engineer of the sources of proposed materials. The manufacturer/contractor shall contact the Engineer to request inspection as required by the New York State Steel Construction Manual (SCM). No work shall commence prior to distribution of approved drawings as per section 202.5 of the Steel Construction Manual. For assemblies manufactured under this specification, inspection and rescheduling issues should be requested 5 working days prior to the commencement of work. Fabrication done without approved drawings or City inspection will be rejected. The Contractor's attention is drawn to the requirement of the PROJECT DESCRIPTION section, in Volume 3 of this Contract, for the use of NYSDOT materials such as the SCM.

MATERIALS

The materials for this work and fabrication shall be in strict conformance with the SCM, and the following sections of the NYSDOT Standard Specifications:

Paint as specified	708
High Strength Bolts, Nuts, and Washers	715-14
Painting Procedures	740
Painting Galvanizing Surfaces	740-03

All specified Galvanized items shall meet the requirements of (ASTM A 153), and minimum thickness shall be 4 mils.

A. ***Structural Strand:*** The structural strand shall be an arrangement of wires laid helically around a center wire to produce a symmetrical cross-section. The structural strand shall meet the requirements of ASTM A586 and shall be provided with a Class A weight zinc-coated inner wires and Class C weight zinc-coated outer wires. The structural strands shall be pre-stretched under a tension not to exceed 55% of the breaking strength. After pre-stretching, the minimum Modulus of Elasticity, E, shall be as per ASTM A586.

The manufacturer's quality procedures plan and manual shall be subject to approval by the Engineer.

Certified copies of the results of the tests conducted by the manufacturer shall be furnished to the Engineer in accordance with the requirements of NYSDOT §715-01, Structural Steel.

Size of structural strand shall be as indicated on the design drawings.

B. ***Cast Sockets and Socket Pins***: The cast sockets and socket pins shall be supplied by the Contractor. The sockets and pins shall be designed to develop the minimum required ultimate strength of the structural strand without suffering stresses beyond the yield point of the socket steel or measurable creep of the zinc filler under load. Open strand socket castings shall be cast steel conforming to the requirements of 715-02 of the NYSDOT Standard Specifications except that the material shall be (ASTM A 148, Grade 105-85) with Supplementary

Requirement S9. One specimen per heat shall be Charpy V-notch (CVN) impact tested with the documented results submitted to the Engineer minimum CVN value shall be 15 ft-lbs @-40^0 F. Socket pin material shall at a minimum meet the requirements of (A 668) Class F and may be machined from forged stock. Galvanizing shall meet the requirements of (ASTM A 153) with a minimum thickness of 4 mils. All socket pins shall be furnished with a recessed hexagonal nut and stainless steel cotter pin. Any material alterations or substitutions must be approved by the Engineer prior to fabrication.

The manufacturer's quality procedures plan and manual shall be subject to approval by the Engineer.

Certified copies of the results of the tests conducted by the manufacturer shall be furnished to the Engineer in accordance with the requirements of NYSDOT §715-01, Structural Steel.

C. ***Pivot Pins:*** Pins material shall at a minimum meet the requirements of (A 668) Class F Galvanized, and the galvanizing shall meet the requirements of (ASTM A 153) with a minimum thickness of 4 mils. Any material alterations or substitutions must be approved by the Engineer prior to fabrication. Pivot pins shall be furnished by the socket supplier.

Certified copies of the results of the tests conducted by the manufacturer shall be furnished to the Engineer in accordance with the requirements of NYSDOT §715-01, Structural Steel.

D. ***Pivot Plates, Washer Plates, Pin Caps and Socket Spacers:*** Plates, spacers and pin caps shall conform to ASTM A709, Grade 50 galvanized, and the galvanizing shall meet the requirements of (ASTM A 153) with a minimum thickness of 4 mils. Pivot plates and pin caps shall be furnished by the socket supplier.

E. ***Neoprene Spacers:*** Neoprene spacers shall be furnished to the dimensions shown on the plans and shall conform to §728-03 of the NYSDOT Standard Specifications.

CONSTRUCTION DETAILS

This work, including fabrication, transportation, and erection shall be in accordance with the provisions of the SCM. Shop drawings shall be prepared, approved, and distributed in accordance with the requirements of the SCM.

A. Testing of Strand Wire:

Prior to fabrication, the zinc-coated steel wire used in the manufacture of the structural strand shall be tested, in the presence of the Engineer or authorized representative, for physical properties in accordance with paragraph 5 of ASTM A 586 and the following:

1. The test for tensile strength shall be made on samples of not less than 10 percent of the coils of any lot of zinc-coated wire. If tests of any of these coils fail to meet the requirements, the Engineer may require that all coils of such lot be tested and shall reject all individual coils which do not meet the requirements for tensile strength.

2. The test for stress at 0.7 percent extension shall be made on samples of not less than 10 percent of the coils of any lot of zinc-coated wire. If tests of any of these coils fail to meet the requirements, the Engineer may require that all coils of such lot be tested and shall reject all individual coils which do not meet the requirements for stress.

3. Tests for zinc coating (weight and adherence) shall be made on samples of not less than 5 percent of the coils of any lot of zinc-coated wire. If tests of any of these coils fail to meet the requirements, the Engineer may require that all coils of such lot be tested. Unless at least 80 percent of the coils pass the test, the entire lot shall be rejected. Any coil failing to meet the requirements shall be rejected.

B. Fabrication of Structural Strand:

The strand shall be manufactured to meet or exceed the strength requirements specified herein. Documentation of compliance with these requirements and the make-up of the wires in the strand shall be submitted to the Engineer.

1. The strand shall be manufactured on machines of sufficient size to ensure good workmanship and shall be fabricated in the greatest length possible. Once the manufacture of the strand has been started, no changes shall be made as to the grade of wire, construction or lay of the strand, or other factors that would affect the uniformity of the finished product. Straightening of bent wires shall not be permitted. Any kinked or damaged strands shall be rejected.
2. All strands shall be pre-stretched by stressing each strand with a load equal to 55 percent of the breaking strength in straight tension. The load shall be maintained and/or repeated until the strand reaches a stable condition and shows a well-defined and uniform elastic stretch and recovery under stressing.
3. The modulus of elasticity of each pre-stretched length of strand shall be determined in accordance with ASTM A 586. This information shall be submitted to the Engineer.
4. The strand shall be measured in the shop for the various hanger lengths while under tension equal to one-half of the full dead load as shown on the plans and cut for use in the hangers. When cutting the strand an allowance shall be made for obtaining test specimens for strand and socket testing as specified in subsection C, Testing of Structural Strand.
5. At the time the strands are measured, a continuous paint stripe shall be made on one side of the strand for its entire length to assure correct alignment of the strands during erection.
6. Strand identification marks shall be provided in order to facilitate erection. Each strand shall have a legible waterproof tag firmly attached to it giving the fabricated length and the location where it is to be installed on the bridge.
7. Strands shall be properly coiled or rolled on reels in such a manner so that no permanent deformation of wires in the strand will occur. Strands shall be stored in a well-protected location. Handling, transporting and storing of strands shall be in accordance with the AISI Wire Rope User's Manual. Any strands or sockets damaged by handling, transporting or storing shall be replaced by the Contractor at no cost to the City.

C. Testing of Structural Strand:

From each pre-stretched length of the strand, one piece not less than (100") long shall be cut and tested, in the presence of the Engineer, to demonstrate the strength of the strand and sockets as specified in paragraph 9 of ASTM A 586. The ends of the test pieces shall be socketed with sockets selected at random from those that are to be used in filling the order. The material and method of socketing shall be the same for both the test pieces and the production strand. Sockets shall be attached to the jaws of the testing machine in such a manner that stresses in the socket will reproduce those expected when the socket is installed in the bridge (i.e. pins at the lower socket and anchor rods at the upper socket). Positive means shall be provided to assure that the strand does not twist after pre-stretching and that the upper and lower sockets are kept free from rotating with respect to each other. The first six test pieces and any others directed by the Engineer shall be stressed to destruction in a suitable testing machine. All pieces shall be tested to not less than the minimum specified breaking strength. The sockets in every instance shall be of sufficient strength to produce failure in the strand material. If, after six or more tests of pre-stretched strands have been made, the Engineer finds that the strength and elasticity have sufficient uniformity, the

Engineer may direct that the testing be reduced to two pieces, one from each end of each manufactured length of strand instead of one from each pre-stretched length. The sockets used for these tests shall not be used in the bridge.

1. If a socket should break during the strand testing specified above, two additional sockets shall be selected and attached to strand and the test repeated. This testing shall continue until the Engineer is satisfied with the socket reliability, at which point the lot shall be accepted. If 10 percent or more of all the sockets tested break at a load less than the specified minimum breaking strength, the entire lot shall be rejected and new ones, of greater resistance, shall be furnished.

D. Socket Finishing:

Sockets shall be neatly finished to the exact dimensions shown on the approved shop drawings. Each socket shall be visually examined for defects. Defects judged to be unacceptable by the Engineer shall be repaired to the satisfaction of the Engineer, or the socket shall be replaced by a new casting. The Engineer shall be the sole judge as to the reparability of a socket. To determine the type and amount of repair, where repairs are required, the Contractor shall perform such additional non-destructive tests at each unacceptable defect as the Engineer may consider necessary. Such tests may be radiograph, ultrasonic, magnetic particle, or liquid penetrant as the Engineer may direct or approve and shall be at the sole expense of the Contractor. Weld preparation shall be examined by magnetic particle or liquid penetrant methods in accordance with (ASTM A 781, S5). Repaired areas shall be retested using magnetic particle or liquid penetrant methods as directed or approved. At the Engineer's option, large repairs may require heat treatment in accordance with (ASTM A 148) requirements. The Engineer shall be the sole judge as to the suitability of a repaired socket.

1. Socket manufacturer shall supply each strand socket drawing along with calculations for each socket. Only cast strand sockets designed for strand shall be supplied.
2. Socket manufacturer and steel fabricator shall review each other's drawings ensuring that all pin and jaw dimensions meet. It is suggested that the socket manufacturer supply one each type cast open strand socket pin to steel fabricator for final fabrication.
3. Holes for socket pins shall be line-bored to final dimensions.
4. After fabrication, it shall be demonstrated that the nuts, when turned by hand, move freely on the threads of the anchor rods for the Type 6 anchor sockets.

E. Socket Installation:

The sockets shall be attached to the strands in accordance with the procedures submitted to the Engineer prior to socketing.

1. Sockets shall be attached to the structural strand at 20% of the minimum breaking strength of each diameter strand.
2. The wires of a strand, after being splayed in preparation for socketing, shall be cleaned of grease and other impurities by a carefully controlled process that will assure no harm is done to the wire galvanizing coating. After socketing, the strand wires adjacent to the socket shall be relubricated.
3. The basket of the socket shall be preheated to expel moisture and to prevent the molten zinc from congealing before it has completely filled the narrow lower end of the basket. Strands shall be rejected if the socketing procedure results in bare wires within the socket.
4. The zinc used to attach the sockets to the strand shall comply with ASTM B 6, High Grade,

or better. The molten zinc shall be placed at the lowest practical temperature, usually within the range of 496°C (925°F) to 524°C (975°F) and never over 538°C (1000°F), so as to minimize the effect of heat on the strands. The zinc temperature at the time of pouring shall be recorded for each socket and submitted to the Engineer. Filling of the socket with molten zinc shall be performed in one continuous operation.

5. Care shall be taken to ensure socket and strand alignment and that the lengths of the hanger after socketing are correct. A tabulation of shop-measured lengths of each hanger shall be submitted to the Engineer for use in erecting the hangers.

F. Pivot Plates, Pivot Pins, and Pin Caps:

Fabrication of pivot plates, pins, and pin caps shall conform to §564-3 of the NYSDOT Standard Specifications. Pivot plates and pin caps shall be galvanized, and the galvanizing shall meet the requirements of (ASTM A 153) with a minimum thickness of 4 mils.

G. Delivery to Job Site:

The hanger assemblies shall be inspected and approved for shipping by the Engineer. The hanger assemblies shall be transported to the job site in a manner such that no permanent deformation of the bridge strand wires occurs. Any bridge hanger assembly damaged by handling, transporting or storing, shall be replaced by the Contractor at no cost to the City.

H. Hanger Erection:

Subcontractor Qualifications

Hanger installation, stressing, and adjustments shall be supervised by the hanger supplier. The hanger supplier must have a representative on site full time during all such operations. The representative shall have previous experience with strand-by-strand installation of hangers/stay cables of similar or larger size on at least two other projects within the previous five years.

The Contractor shall submit qualification for all subcontractors and supervisors and a quality procedures manual to the Engineer for review.

Hangers shall be erected with sockets in the same relative position to each other as existed when strands were measured and with paint stripe in a straight line. Extreme care shall be taken to prevent twisting of the strands during erection and field adjustments to hanger tension and roadway profile grade in accordance with the following:

1. Field adjustments to hanger tension and roadway profile grade shall be made underfloor system framing dead load and again under full dead load. Each strand shall be tensioned to one-half of the hanger force shown on the plans. Strands shall be tensioned simultaneously at each panel point on each side of the bridge using calibrated jacks in accordance with the approved jacking procedure.
2. The Contractor shall submit a written hanger installation procedure to the Engineer for approval. The Contractor shall submit to the Engineer the complete method of erecting and tensioning the hanger assemblies in accordance with Section 204 of SCM.

I. Painting

All ferrous metal surfaces, other than stainless steel and hot dipped galvanized surfaces of the hanger cable system, shall be painted with approved paint system.

Finish coat color shall be the color of the arch span. Bearing plates, guide pipes, and tower deviation pipes shall be galvanized in accordance with ASTM M 111M (ASTM A123M), Standard Specification for Zinc (Hot-Dip Galvanized) Coating on Iron and Steel Products, six

kilograms per square meter.

J. Handling

The Contractor shall develop procedures to assure that hanger cable components will not be damaged during handling.

Hangers shall be protected from corrosives, heat, abrasion and other harmful effects throughout the fabrication and installation.

Spreader bars and slings or other appropriate devices shall be used to handle all cables. The minimum bending radius for all such cables during handling shall be 25 times the diameter of the cable sheath. Slings or similar devices shall be positioned on the cable to carry both the anchor and adjacent cable in a tangent position, preventing bending of the cable at the anchor. Slings and spreader devices shall be padded to prevent damage to the cable sheath.

All damage to hangers or components thereof shall be evaluated by the Engineer and remedied prior to installation of the cable. Damaged strand shall be replaced. Damage to non-load carrying components shall be repaired to the Engineer's satisfaction prior to the installation of the hangers. Repair procedures shall be submitted for review and approval prior to the commencement of work.

K. Working Drawings

All working drawings shall be in accordance with the provisions of section 2 of the SCM.

1) Shop Drawings

   The contractor shall prepare and submit shop drawings in accordance with Section 202. Shop Drawings in the SCM. The Contractor shall submit copies of the detailed shop drawings to the Engineer for approval.

2) Erection Drawings

   The contractor shall prepare and submit erection drawings in accordance with Section 204. Erection Drawings in the SCM.

The Contractor shall submit drawings illustrating fully their proposed method of hanger erection and installation. It is intended that the hangers are prefabricated and installed as one system. Erection drawings shall show details of all lifting and handling devices, and attachments to the hangers: the sequence of erection, location, and capacities of lifting equipment as well as the location of lifting points on the hangers, and weights of the hangers.

The plan and drawings shall be complete in detail for all anticipated phases and conditions during hanger installation. Design calculations, sealed by a Professional Engineer registered in the State of New York, shall be submitted by the Contractor to the Engineer for approval which will demonstrate compliance with the PTI Recommendations and these specifications.

L. Certificate of Compliance:

The Contractor shall submit records of all tests results and Certificates of Compliance to the Engineer indicating that all materials, testing and fabrication of the hanger assemblies and dampening devices meet the requirements specified herein.

METHOD OF MEASUREMENT

Payment will be made at the lump sum price bid.

BASIS OF PAYMENT

The price bid shall include the cost of testing, fabricating, transporting and installing bridge hanger assemblies as shown on the plans, and all field adjustments to hanger tension and roadway profile grade required or ordered.

A. Progress Payments – Lump Sum:

These shall be calculated by multiplying the lump sum price bid less 20% by the ratio which represents the bridge hanger assemblies erected during the payment period in question less any partial payments made for the hanger assemblies erected. The ratio will be computed by dividing number of the erected bridge hanger assemblies by the Total Quantity of bridge hanger assemblies. The remaining 20% will be paid upon final adjustment and acceptance of all hangers as specified under Construction Details §H, Hanger Erection (refer to NYSDOT §109-03).

Progress Payment Formula:

Progress Payment Amount = ((LS Price Bid-20%) X (x/y)) – z

x – No. of Hangers Assemblies Installed/payment period

y – Total no. of Hanger Assemblies

z – Partial payment (if any) made on x Hanger Assemblies Installed in the payment period

If the Contractor elects, partial payments may be made per NYCDOT Standard Highway Specifications Section 1.06.35. Partial payment for material shall be deducted prior to making progress payments as stated above.

Payment Will be made under:

Item Number	ITEM	Pay Unit
564.02010211	Bridge Hanger Assemblies	Lump Sum

END OF SECTION

SECTION 572.0002NN01 – METALIZING

DESCRIPTION

This work shall consist of furnishing all materials and equipment necessary and to apply metalizing in accordance with the contract documents and as directed by the Engineer.

Qualification of Metalizing Contractor

The metalizing contractor performing the work shall document previous experience in providing surface preparation for metalizing and metalizing application services in the shop and field, with a minimum history of three (3) successfully completed projects of similar complexity. The contractor shall be certified per the requirements of SSPC-QP 3.

The contractor shall submit experience and qualification records of all personnel performing the work.

Qualification of Thermal Spray Technicians and Personnel

The thermal spray technicians shall be qualified in accordance with ANSI/AWS C2.16 with a minimum passing adhesion of 700 psi, and must hold a certificate of satisfactory completion of training from the equipment manufacturer. The equipment used for qualification shall be equivalent to that used in production.

Each metalizing shift shall have at least one metalizing supervisor, meeting the thermal spray technician requirements, and who will additionally have a minimum of three years documented satisfactory metalizing experience on similar projects.

An SSPC certified Quality Control Supervisor shall be on the thermal spray company's staff and shall provide a Quality Control Plan to the Engineer prior to the onset of work. The Quality Control Supervisor shall meet the requirements of Thermal Spray Supervisor as per SSPC-QP 6. Additionally, the Quality Control Supervisor shall have a minimum of five (5) years experience with satisfactory performance in abrasive blast cleaning of steel surfaces according to SSPC-SP 10 and shall have performed similar duties on two successful metalizing projects.

Codes and Standards

The provisions set forth in the latest issue of the following codes and standards shall apply unless otherwise indicated in the contract documents:

ASTM B 833, Standard Specification for Zinc Wire for Thermal Spraying (Metalizing).

ASTM C 633, Test Method for Adhesive/Cohesive Strength of Flame Sprayed Coatings.

ASTM D 4285, Method for Indicating Oil or Water in Compressed Air.

ASTM D 4417, Test Method for Field Measurement of Surface Profile of Blasted Steel.

NACE Standard RP0287, Field Measurement of Surface Profile of Abrasive Blast Cleaned Steel Surfaces Using a Replica Tape.

ASTM D 4541, Test Method for Pull-Off Strength of Coating Using Portable Adhesion Testers.

ASTM E1920, Standard Guide for Metallographic Preparation of Thermal Sprayed Coatings.

ASTM E2109, Standard Test Methods for Determining Area Percentage Porosity in Thermal Sprayed Coatings.

ANSI/AWS C2.16, Guide for Thermal-Spray Operator Qualification

ANSI/AWS C2.18, Guide for the Protection of Steel with Thermal Spray Coatings of Aluminum, Zinc, and Their Alloys and Composites.

SSPC-CS 23.00/AWS C2.23M/NACE No. 12, Specification for the Application of Thermal Spray Coatings (Metalizing) of Aluminum, Zinc, and their Alloys and Composites for the Corrosion Protection of Steel.

SSPC Publication, the Inspection of Coatings and Linings: A Handbook of Basic Practice for Inspectors, Owners, and Specifiers.

SSPC-AB 1, Mineral and Slag Abrasives.

SSPC-AB 2, Specification for Cleanliness of Recycled Ferrous Metallic Abrasives.

SSPC-AB 3, Ferrous Metallic Abrasives.

SSPC-PA 1, Shop, Field, and Maintenance Painting of Steel.

SSPC-PA 2, Measurement of Dry Coating Thickness with Magnetic Gages.

SSPC-QP 3, Standard Procedure for Evaluating Qualifications of Shop Painting Applicators

SSPC-QP 6, Standard Procedure for Evaluating the Qualifications of Contractors Who Apply Thermal Spray (Metalizing) for Corrosion Protection of Steel and Concrete Structures

SSPC-SP 1, Solvent Cleaning

SSPC-SP 10/NACE No. 2, Near-White Blast Cleaning.

SSPC-SP 11, Power Tool Cleaning to Bare Metal

SSPC-VIS 1, Guide and Reference Photographs for Steel Surfaces Prepared by Dry Abrasive Blast Cleaning.

Quality Control Plan

Prior to the start of work, the Contractor's QC Supervisor shall provide a written quality control plan and submit it to the Engineer for approval. The plan shall include the procedure to be followed and equipment to be used for all processes outlined herein, including surface preparation and metalizing and seal coat application. The plan shall include a method of adhesion testing, thickness measuring, bend test protocol, testing frequency, and MSDS sheets for material utilized on the project. The plan shall outline the quality assurance procedures and any safety precautions that must be followed by workers and inspectors. No work shall commence until the Engineer has approved the plan.

Job Reference Standard (JRS)

A job site pass/fail Job Reference Standard (JRS), representative of the work to be performed, shall be prepared by the metalizing applicator. The JRS will be used to evaluate the suitability of the application process. The JRS shall be made on a steel plate approximately 18 in. x 18 in. x 0.25 in. and shall be made with the actual equipment, materials, and process parameters and procedures (surface preparation, metalizing, sealing, and testing) that shall be used for the contracted work. The JRS shall be made in similar environmental conditions as the work to be performed. Thickness measurements and adhesion tests shall be performed on the JRS per this specification. The JRS will be deemed unsatisfactory if any of the measurements or test results is less than the values indicated herein.

Metallographic testing shall be performed, in accordance with ASTM E1920 and ASTM E2109, on a JRS meeting the requirements of this section. Porosity of the metalized coating shall be less than 10% with less than 5% air inclusions in the film, and shall be fully bonded to the substrate with no air pockets between the coating and substrate. There shall be no interconnected porosity to the substrate for the contract specified thickness, intended technique of application, number of passes, and thickness applied per pass.

For steel assemblies exhibiting acute angles between structural members to be metalized in the shop after assembly, a similarly scaled steel, blasted mockup must be put together emulating the angles encountered. This mockup shall be metalized by the coating applicator, disassembled and adhesion testing shall be performed on the metalizing in the acute angle, per these specifications. If the mockup fails the adhesion test, the applicator shall change the application technique and/or adjust equipment to obtain proper adhesion results, thickness measurements and appearance requirements in acute angles.

Job Control Record

The Contractor shall keep a Job Control Record (JCR), detailing the essential job information and the in-process quality control checkpoints required by this standard. The JCR shall include information on safety precautions, and the equipment, parameters, and procedures for surface preparation, thermal spraying, and sealing. Failure to perform production work in a manner consistent with the JCR guidelines will be cause for rejection.

MATERIALS

A. METALIZING

Certified alloy wire is required, and shall be composed of 85% zinc and 15% aluminum by weight. Wire shall meet the requirements of ASTM B-833 Standard Specification for Zinc and Zinc Alloy Wire for Thermal Spraying (Metalizing) for the Corrosion Protection of Steel. The Contractor shall submit a certificate with results of testing for chemical analysis to the Engineer, for each lot of wire used on the job. The Contractor shall obtain written certification from the manufacturer of the alloy and will provide the certifications for each lot of wire a minimum of five business days prior to commencement of metalizing.

The metalizing 85/15 alloy shall have a minimum tensile bond of 700 psi.

B. ABRASIVE FOR BLAST CLEANING

Blast media shall be angular steel grit, angular aluminum oxide, or angular crushed slag, evaluated per SSPC-AB 3 for new abrasive material, and shall be capable of producing an angular anchor tooth profile. If abrasive material is to be recycled, the abrasive material shall be evaluated prior to each reuse per the requirements of SSPC-AB 2. Use of silica sand, steel shot, or any other abrasives that result in a round surface profile is prohibited.

C. SEALER

Sealer shall be UV resistant and be a urethane or epoxy polyamide penetrating sealer, type as recommended by the supplier for use on metalized surfaces. The sealer shall be VOC compliant for use in New York State. Sealer shall be of such viscosity to penetrate pores in metalized coating.

D. PAINT

Paint shall be a two-coat system with an polyamide epoxy primer and an aliphatic urethane, suitable for exterior use. The paints shall have a VOC level below 340 g/L or 2.8 lb/gal, shall

be produced by the same manufacturer, and the prime and top coat shall be compatible. The primer shall be specifically formulated for use over metalized surfaces.

E. SUBMITTALS

The metalizing applicator shall submit the detailed procedures for surface preparation, metalizing application, and application of sealer coat, conforming to these specifications. The procedures shall detail the equipment, application process, in-process quality control, and Job Control Record to be used for the contract work. The information shall include:

1. Detailed procedures for surface preparation, thermal spraying, seal coating, and the in-process quality control checkpoints.
2. Equipment (surface preparation, thermal spraying, seal coating, and the in-process quality control) to be used and for which the detailed procedures apply.
3. Product Data and MSDS sheets for sealer.
4. Blasting media, thermal spray feedstock materials, and seal coat product.
5. Job Reference Standard.
6. Job Reference Standard test results report.
7. Job Control Record.
8. Repair of defective coatings per ANSI/AWS C2.18.
9. Certification of Class B slip coefficient and creep resistance. The certification shall include the written test results, including the thickness range required to meet the certification. Certification of Class B slip and creep resistance is not required for metalized to metalized faying surfaces meeting the requirements of this specification.

This information shall be submitted at least 10 work days prior to the schedule start of the Job Reference Standard (JRS).

CONSTRUCTION DETAILS

A. SURFACE PREPARATION

Prior to blast cleaning, steel surfaces shall be Solvent Cleaned in accordance with SSPC-SP 1, Solvent Cleaning, to remove all visible oil, grease, dirt, salt, and other contaminants. Then, all surfaces to be metalized shall be cleaned to SSPC-SP 10, Near-White Blast Cleaning, standards. All cleaning and coating shall be performed at the same facility. Surface finish and cleanliness shall be confirmed according to SSPC-VIS 1 standards. In the event of a dispute, the written SSPC SP-10 standard will take precedence.

Unacceptably hard surfaces, as defined by section 602 of the NYSDOT Steel Construction Manual, shall be removed by grinding, machining, or approved heat treating procedures, prior to abrasive blasting.

The substrate shall have an angular anchor tooth profile of 3 to 5 mils. Surface Profile measurements shall be made using X-course profile tape and a micrometer, as outlined in ASTM D4417. “Standard Test Methods for Field Measurement of Surface Profile of Blast Cleaned Steel/NACE Standard RP0287, Field Measurement of Surface Profile of Abrasive Blast Cleaned Steel Surfaces Using a Replica Tape.” Spot measurements shall be made approximately every 2000 ft^2 for automated blasting or 200 ft^2 for manual blasting. Take

three measurements for each spot in an area approximately 1.5 in^2. Average the measurements and record in the Job Control Record.

Compressed air shall be free of oil and water and shall meet ASTM D4285, method for Indicating Oil or Water in Compressed Air. Utilize a compressed air system capable of delivery at the nozzle of 125 cfm at 120 psi. To minimize any contamination, use an oil/water separator on the airline. 120 psi of compressed air maintains the proper atomization of the molten wire producing the optimum spray pattern.

B. SYSTEM REQUIREMENTS

Only spooled metalizing wire, which is properly drawn, spooled and packaged, shall be used.

The metalizing equipment shall be set up, calibrated, and operated according to the manufacturer's instructions and technical manuals or the metalizing applicator's refinement thereto and as validated by the Job Reference Standard.

Spray parameters shall be set for spraying the specified thermal spray material and, at a minimum, be validated with the bend test. A bend test shall be satisfactorily performed at the beginning of crew and shift change.

A copy of the spray parameters used shall be attached to the Job Control Record.

C. SUBSTRATE CONDITION

The steel surface temperature shall be at least 5°F above the dew-point.

For flame spraying, preheat the initial starting area to a minimum of 250°F to prevent condensation of moisture in the flame onto the substrate. Validate preheating and non-preheating requirements with a tensile bond measurement and a bend test.

Time between the completion of the final anchor-tooth blasting (or final brush blasting) and the completion of the thermal spraying shall be no greater than six hours for steel substrates. In high- humidity and damp environments, shorter holding periods shall be used. If rust bloom or a degraded coating appears at any time within the six-hour window, the procedure outlined in Section F, Surface or Coating Degradation shall be followed.

Extension of Time of Application

In low-humidity environments or in enclosed spaces using industrial dehumidification equipment, it will be possible to retard the oxidation of the steel and hold the surface finish for more than six hours. The metalizing applicator, with the approval of the Engineer, can validate a holding period greater than six hours by determining the acceptable temperature-humidity envelope for the work enclosure by spraying and analyzing bend coupons and tensile-bond coupons.

A 1-mil to 2-mil flash coat of the metalizing may be applied within six hours of completing surface preparation to extend the holding period for up to four further hours beyond the complete application of the flash coat. The final metalizing thickness, however, shall be applied within four hours of the completion of the application of the flash coat provided the metalizing can be maintained free of contamination.

Validate the use of the flash TSC holding period with a tensile-bond measurement and a bend test.

- Clean and abrasive blast a representative job area and three bend-test coupons.

- Apply a flash metalizing to the representative job area and the three bend coupons.
- Wait the delay period in representative environmental conditions and apply the final metalizing thickness.
- Perform adhesion test and bend test on coupons.
- Flash metalizing and holding period are acceptable if the tensile bond and the bend test are satisfactory.

D. METALIZING

The applied 85/15 alloy metalizing thickness shall be a minimum of 12 mils, with a tolerance of - 0 and + 4 mils. For each coated component, the applied thickness shall be measured using a SSPC PA2 type 2 fixed probe gauge properly calibrated per certified coating thickness calibration standards, and measurements shall be recorded in the Job Control Report (JCR). Use a measurement line to measure the peaks and valleys of the metalizing, taking the average value of five readings along a line at 1.0 in. intervals. For complex geometries and geometric transitions, use a measurement spot approximately 1.5 square inches, and do not measure the peaks and valleys of the metalized coating. Record all measurements in the JCR. If upon inspection, and prior to sealer application, the metalizing thickness is less than the above stated requirements, the applicator shall apply additional metalizing to meet the thickness requirements.

No coating shall be applied unless the following conditions are met:

- The receiving surface shall be clean and absolutely dry.
- The surface temperature and ambient air temperature are as recommended by the coating equipment's manufacturer, except in no case shall coating work be performed when surface and ambient air temperatures are less than 40°F.
- The receiving surface temperature shall be at least 5°F above the dew point.
- The relative humidity shall not exceed 85%.

All coating applied in violation of these conditions shall be completely removed, and the affected surface cleaned and recoated in accordance with the stated requirements at no additional cost to the City.

Any staining that does occur shall be removed in a manner that does not cause damage to the seal or metalized coatings, at no cost to the City.

Surface Roughness: Surface roughness of the metalized coating shall be less than 4 mils in order to avoid unfilled valleys and low areas in the film.

E. SEALER

Sealer shall be applied and cured according to the paint manufacturer's instructions for use with metalizing, or as directed by the Engineer.

The seal coat shall be thin enough to penetrate into the body of the metalizing and seal the interconnected surface porosity. Typically the seal coat is applied at a spreading rate resulting in a theoretical 1.5 mil dry-film thickness.

Sealer shall be applied as soon as possible after thermal spraying, but shall be applied within eight hours after application of metalizing. If a sealer cannot be applied within eight hours, it shall be verified that the metalizing (a) has not been contaminated by visual inspection (10x), and (b) is dust-free (10x) using the clear cellophane tape test per ISO

8502-3 before applying the sealer.

If moisture is present or suspected in the pores of the metalizing, the steel shall be heated to 250ºF to remove the moisture prior to seal coat application. When possible, the steel shall be heated from the reverse side of the metalizing to minimize oxidation and contamination of the metalizing prior to sealing.

During application of the seal coat, it shall be visually validated that there was complete coverage of all intended areas. Companion steel coupons positioned near the metalizing shall receive a seal coat as well. The wet and dry film thicknesses of the seal coat on these companion coupons shall be used to verify that the correct thickness of seal coat is being applied to the metalizing. Measurements shall be recorded in the JCR.

The sealer shall not be applied to faying surfaces prior to assembly. Faying surfaces of all bolted connections shall be masked prior to application of the seal coat. Touch-up field sealant shall be applied after assembly of the connection.

F. SURFACE OR COATING DEGRADATION

If rust bloom, blistering or a degraded coating appears at any time during the application of the metalizing, the following procedure applies:

1. Stop spraying.
2. Mark off the satisfactorily sprayed area.
3. Call the Thermal Spray Inspector/Foreman to observe and evaluate the error.
4. Report the deficiency to the Engineer and record the deficiency.
5. Repair the unsatisfactory area by removing the degraded metalizing, re-blast to a minimum near-white metal finish (SSPC-SP 10 standard), and returning to the specified anchor tooth profile depth.
6. Recoat the blasted area as per this specification.
7. Record the actions taken to resume the job in the JCR.

G. FIELD REPAIRS

The only field work allowed to be done under this item is touch-up work after all steel erection and all concrete placement has been completed. All areas requiring field repairs shall be clearly marked. All the requirements of this specification shall apply to field coating material with the following modifications:

1. All dirt, grease and other foreign matter shall be removed in accordance with SSPC-SP 1, Solvent Cleaning. Clean the damaged area of all loose and cracked coating by power tool to bare metal in accordance with SSPC-SP 11, Power Tool Cleaning to Bare Metal.
2. Roughen the damaged area and the surrounding 2 inches to produce a suitable anchor for the coating. All repaired areas shall be tested for proper anchor tooth profile in accordance with ASTM D4417 and as per this specification.
3. All damage to the coating system shall be corrected by the contractor in accordance with the requirements of this specification and to the satisfaction of the Engineer at no additional cost to the City.
4. The overlap of thermal spray edges shall be tested for proper adhesion at each repair location in accordance with this specification.

H. ADHESION TEST

Random adhesion testing shall be performed for each coated component, utilizing self

aligning portable pull-off adhesion testing equipment, in accordance with ASTM D 4541 standards. The minimum tensile bond value shall be 700 psi.

Use adhesive recommended by the instrument manufacturer, or equivalent. Attach adhesive manufacturer's instructions to the job control record.

One portable tensile-bond measurement shall be made every 500 ft^2. If the tensile bond is less than the contract specification, additional tensile bond measurements shall be made to identify the limits or boundaries of the degraded metalizing. The degree of added testing that is necessitated by coating deficiencies will be solely determined by the Engineer, and shall be performed at no added cost to the City. Any degraded metalizing shall be removed and reapplied as per Section F, Surface or Coating Degradation. The tensile force shall be measured to 700 psi. The tensile force shall then be reduced and the tensile fixture removed without damaging the metalizing.

I. BEND TEST

Conduct a bend test at the beginning of each work shift or crew change:

1. Use carbon steel coupons of approximate dimensions 2 in. x 4 in. to 8 in. x 0.050 in.
2. Surface preparation according to contract specification.
3. Spray 12-mil to 15-mil thick metalizing in crossing passes, laying down approximately 3 to 4 mils for each pass.
4. Bend coupons 180° around a 0.5-in. diameter mandrel.
   a. Bend test passes if there is no cracking or only minor cracks with no spalling or lifting (by a knife blade) from the substrate.
   b. Bend test fails if the coating cracks with lifting (by a knife blade) from the substrate.

   Bend test shall be performed on coupons without sealant coats.

J. WEATHER CONSIDERATIONS:

Thermal spraying in low-temperature environments (below freezing):

Substrate shall meet the surface temperature and holding period specified in Section C, Substrate Condition. No moisture or condensation is permissible on the surface during surface preparation and thermal spraying.

Qualify metalizing period with a tensile-bond measurement and a bend test. Meet the tensile bond and metallographic requirements specified herein.

BASIS OF PAYMENT

The cost of furnishing all labor, materials, and equipment necessary to satisfactorily complete the work must be included in the price bid for items 564.0501 and 564.0502.

END OF SECTION

SECTION 619.70040011 - PROTECTIVE SAFETY SHIELDING OVER HIGHWAY

DESCRIPTION

This work shall consist of furnishing protective safety shields at the locations specified in the plan.

MATERIALS

Structural:

1) Structural steel shall conform to the requirements of Section 564 *Structural Steel.*

Timber and Lumber:

- Timber and Lumber shall confirm to the requirements of Section 594 *Timber and Lumber*
- Stress graded timber and lumber shall confirm to the requirements of §712-14 *Stress Graded Timber and Lumber.*

CONSTRUCTION DETAILS

The Contractor shall be responsible for the shield design. Calculations, drawings, details and installation procedure of the shield shall be prepared by a licensed Professional Engineer. A minimum of 90 work days prior to installation, the contractor shall submit design details to the participating railroad and the Engineer for approval.

The Contractor shall construct shields to the limits shown on the plans, in accordance with the horizontal and vertical clearance and design loads specified in the railroad or highway notes on the plans or in the contract documents.

The Contractor shall remove the protective safety shielding once the shielding is no longer needed. **METHOD OF MEASUREMENT**

The quantity of safety shields to be measured for payment will be in square feet measured to the nearest whole square foot, from the limits shown on the plans.

BASIS OF PAYMENT:

The unit price bid per square foot shall include the cost of furnishing all labor, equipment and materials necessary to complete the work. Progress payments will be made as follows: 90% of the unit price bid for initial installation during construction and 10% of the unit price bid for final removal, at each location or construction stage.

Item No.	Item	Pay Unit
619.70040011	**Protective Safety Shield Over Highway**	**SF**

SECTION NYC-180002 – METAL ARCHITECTURAL MESH

DESCRIPTION

This work shall consist of furnishing and installing tensioned metal architectural mesh as shown on Contract Drawings, and as directed by the Engineer. Each tensioned mesh panel shall be fastened with the associated connection plates, bolts, nuts, washers, stiffeners, structural steel assemblies and appurtenances, and all field adjustments to mesh tension.

MATERIALS

Architectural Mesh Tension System: Large-scale, rigid open weave mesh.

a. Mesh
   i. Mesh Basis of Design Pattern: Cambridge Tartan (1” x 1” Mesh)
   ii. Material: Stainless Steel.
   iii. Maximum Width: 120 inches.
   iv. Weight: 1.00 lb/sq. ft.
   v. Open Area: 77 percent.
   vi. Mesh Type: Rigid.
b. Attachment System: Flat bar/Clevis
   i. Material: Stainless Steel
   ii. Mesh panel ends are clasped between flat bars with holes punched through bars. Clevises are mounted at the holes and used for tensioning the mesh panels.
c. **Structural Steel:** All channels, plates, and angles shall conform to ASTM A709, Grade 50.
d. **Fasteners:** High strength bolts shall be manufactured in accordance with the sizes designated on the Contract Plans, the geometric specifications included in ANSI B18.2.6 and material specification ASTM F3125 Grade A325. All high strength bolts shall be hot-dipped galvanized in accordance with ASTM A153 Class C. Nuts and Washers shall be manufactured in accordance with ASTM A563 and ASTM F436, respectively. All Nuts and Washers shall be hot-dipped galvanized in accordance with ASTM A153 Class C.

CONSTRUCTION DETAILS

Product Construction: Manufacturers include:

a. Cambridge Architectural, Cambridge Inc, www.cambridgearchitectural.com, Tel: (866) 806-2385.
b. Ametco Manufacturing Corporation, ametco.com, Tel: (800) 321-7042.
c. McNichols and Gage Architectural Products, http://www.mcnichols.com/, Tel (877)-884-4653.
d. Or as approved by the Engineer.

Examination:

a. Do not begin installation until anchor studs and base plate have been properly prepared to receive the products of this section.
b. Verify dimensions, tolerances, and method of attachment with other work on-site.
c. If anchor bolt and base plate preparation is the responsibility of another installer, notify Architect of unsatisfactory preparation before proceeding.

Cleaning and Preparation:

a. Clean surfaces thoroughly prior to installation.

b. Prepare surfaces using the methods recommended by the manufacturer for achieving the best result for the substrate under the project conditions.

Fabrication:

a. Make architectural mesh panels square in accordance with approved Shop Drawings.
b. Fabrication compatible attachment system to satisfy structural and performance requirements.
c. All fabrication and welding must meet the requirements of the New York State Steel Construction Manual (SCM).

Engineering services:

a. Manufacturer to provide on-site assistance during mock-up installation as well as initial stage of project installation.
b. Manufacturer to provide PE stamped calculations prepared by a Professional Engineer Licensed in the State of New York. Calculations must be provided to satisfy the following design criteria:
    i. Mesh must limit deflection of fabric at mid-span to a max of 3” in 80 mile per hour winds, 3 seconds gust. Vertical post spacing may be adjusted to limit deflections.
    ii. Fence mesh tension shall be limited to to 150 plf unloaded.
    iii. Fence mesh tension shall be limited to to 300 plf loaded.

Submittals:

a. Calculations.
b. The Contractor shall submit Shop Drawings for approval prior to beginning the work and shall not begin work until all approvals are granted.
c. Mesh Panel: Manufacturer's data sheets on each product to be used, including:
    i. Preparation instructions and recommendations.
    ii. Storage and handling requirements and recommendations.
    iii. Installation methods.
d. Submit Shop Drawings indicating the following:
    i. Mesh series and pattern name.
    ii. Panel sizes.
    iii. Panel thickness.
    iv. Installation details.
    v. Vertical member locations.
    vi. Provisions for reinforcement and anchoring.
e. Verification Samples: For each finish product specified, two samples, minimum size 6 inches square, representing actual product, color, and patterns.

Coordination:

a. Coordinate fabrication of metal mesh with fabrication of work on or in which the panels will be installed.
b. Providing final size measurements to manufacturer in time to avoid delay in the construction schedule.

Installation:

a. Install in accordance with manufacturer's instructions.
b. Provide suitable means of permanent, positively connected anchorage acceptable to the engineer such as dowels, bar anchors, expansion bolts and shields, and toggles. Clipped anchors which could vibrate loose over time will not be acceptable.
c. Anchor supports securely with allowance for necessary thermal movement and structural

support.

d. Erect metalwork square, plumb, straight, and true, accurately fitted, with tight joints and intersections.
e. Do not install component parts that are observed to be defective, including warped, bowed, dented, abraded and broken members.
f. Do not cut, trim, weld or braze component parts during erection in manner that would damage finish, decrease strength, or result in visual imperfection or failure in performance. Return component parts that require alteration to shop for re-fabrication, if possible, or for replacement with new parts.
g. Separate dissimilar metals and use gasketed fasteners, isolation shim, or isolation tape where needed to eliminate possibility of corrosive or electrolytic action between metals.

Quality Assurance:

a. Manufacturer shall be a firm with engineering, manufacturing, and delivery capacity required for project. Manufacturer shall have successfully completed at least five (5) projects within the past 3 years of similar size, complexity, and utilizing similar systems.

Protection:

a. Protect installed products until completion of project.
b. Touch-up, repair or replace damaged products before Substantial Completion.

Delivery, Storage, and Handling:

a. Store products in manufacturer's unopened packaging until ready for installation.
b. Store products wrapped or otherwise protected and under clean and dry storage conditions until required for installation.
c. Should any field condition or installation issue arise which results in excessive movement of the mesh or incompatibility with the bridge system, provide field and engineering support to promptly remedy the issue to the satisfaction of the Engineer.

Warranty:

a. Provide 5 year from Substantial Completion joint Contractor/ Manufacturer warranty against defects and ensuring mesh performs as intended without excessive movement or failure of any components. Contractor shall repair or replace any conditions due to defective design and manufacture noted by the Engineer within the warranty period at no cost to the City of New York.

METHOD OF MEASUREMENT

This work will be measured on a lump sum basis.

BASIS OF PAYMENT

The lump sum price bid shall include the cost of furnishing all labor, materials, structural anchorage, installation of anchorage, and equipment necessary to satisfactorily complete the work.

Payment will be made under:

Item No.	Item	Pay Unit
NYC-180002	Metal Architectural Mesh	Lump Sum

END OF SECTION

Section ESCR 570 – Concrete Deterrent Furniture

ESCR 570.01 INTENT

Provide concrete deterrent furniture in accordance with the requirements of the Contract Documents.

ESCR 570.02 DESCRIPTION

The work shall consist of constructing, furnishing and placing concrete deterrent furniture. Preparation for work shall include coordinated submittals, samples, visual and performance testing mock-ups, and installations as specified herein. Fabrication and installation of concrete deterrent furniture assemblies shall include coatings, embedments, trim, and reinforcement.

ESCR 570.03 REFERENCES

General: Comply with the applicable provisions and recommendations of the referenced standards except as modified by governing codes and by the Contract Documents. Where a recommendation or suggestion occurs in the referenced standards, such recommendation or suggestion shall be considered mandatory. In the event of conflict between referenced standards, this specification or within themselves, the more stringent standard or requirement shall govern.

A) American Concrete Institute (ACI)

a. ACI 301: "Specifications for Structural Concrete for Buildings".
b. ACI 318: "Building Code Requirements for Reinforced Concrete".
c. ACI 315: "Details and Detailing of Concrete Reinforcement".
d. ACI 211.1: "Standard Practice for Selecting Proportions for Normal and Heavy Weight Concrete".
e. ACI 304: "Guide for Measuring, Mixing, Transporting and Placing Concrete".
f. ACI 347 "Guide to Formwork for Concrete".

B) American Welding Society (AWS)

a. AWS D1.1: "Structural Welding Code - Steel".
b. AWS D1.4: "Structural Welding Code - Reinforcing Steel".

C) Precast/Prestressed Concrete Institute

a. PCI MNL 117: "Manual for Quality Control for Plants and Production of Architectural Precast Concrete Products".
b. PCI MNL 121: "Manual for Structural Design of Architectural Precast Concrete".
c. PCI MNL 122: "Architectural Precast Concrete".

D) Concrete Reinforcing Steel Institute (CRSI)

a. CRSI: "Manual of Standard Practice
b. CRSI-WCRSI "Placing Reinforcing Bars".

ESCR 570.04 MATERIALS

A) CONCRETE MATERIALS

Cement, aggregate, water, admixtures, etc. shall comply with Section ESCR 3.05 – Concrete. Fabricator has the following two concrete options:

Option 1 – Precast Concrete Materials

Concrete: Steel-reinforced, 5000 PSI minimum 28-day compressive strength, air-entrained (ASTM C260):

Match Engineer's sample for color, texture and finish.

Reinforcing Steel: ASTM A615, grade 60 unless otherwise specified and galvanized.

Welded Wire Fabric: ASTM 185, Grade 65, galvanized.

Option 2 – Ultra High Performance Concrete (UHPC) Materials

Ultra High Performance Concrete:

1. Ultra High Performance Aggregate (UHPA) with PVA fibers.
2. Mechanical Properties at 28 days:
   a. 16,000 psi compressive
   b. 1,400 psi flexural
   c. 6,500 ksi Young's modulus (E)
   d. 1000 psi direct tension
3. Reinforcement: Stainless Steel fibers.
4. Match Engineer's sample for color, texture and finish.

B) FORMWORK

Provide forms that are non-reactive with concrete and produce required finish surfaces with materials specified. Accurately construct forms, fluid-tight, and of sufficient strength to withstand pressures due to concrete placing operations and temperature changes. Maintain formwork to provide concrete deterrent furniture units of shapes, finishes, and dimensions indicated on contract drawings.

Formwork materials:

1. Resin-impregnated plywood.
2. Non-staining metal fasteners.
3. High density urethane.

Form release agent shall be colorless, non-staining and having no deleterious effects on concrete surfaces. Coating shall be compatible with form surface allowing minimal surface voids. Coating shall be compatible with final anti-graffiti coating.

C) METAL MATERIALS

Metal work to be incorporated in to the furniture which will be exposed to view, shall consist of metal materials which are smooth and free of surface blemishes. Do not use materials which have stains and discolorations.

Surface Flatness and Edges: For exposed work provide materials which have been cold-rolled, cold-finished, cold-drawn, extruded, stretcher leveled, machine cut and otherwise produced to the highest commercial standard for flatness with edges and corners sharp and true to angle or curvature as required.

All exposed metal materials shall be Stainless Steel, AISI Type 316 with No. 4 finish.

1. Plate and Sheet: ASTM A666, Stretcher level sheets.
2. Bar Stock: ASTM A276.

D) FINISHES

Custom concrete finish, as indicated on drawings and matching approved samples and mock-up.

E) ANTI-GRAFFITI COATING

Concrete Anti-Graffiti Coating at exterior face (public side): Provide non-sacrificial, water borne, breathable, non-yellowing, UV stable, VOC compliant, anti-graffiti coating and shall comply with NYSDOT specification item number 559.90010011.

ESCR 570.05 MANUFACTURER

Fabricators: Subject to compliance with requirements, fabricators offering products that may be incorporated into the Work include, but are not limited to, the following:

1. QCP, Norco, CA. - (347)931-3142
2. Southside Precast Products, Buffalo, NY - (716) 825-9300
3. David Kucera, Inc., Gardiner, NY - (845) 255-1044
4. Jersey Precast, Trenton, NJ - (609) 587-6068
5. Blakeslee Prestress Inc. Branford, CT – (203)-481-5306

Fabricator must submit a sample piece representative of at least one of the types of precast products on the project or provide the location of a recently finished product that is publicly accessible for approval to be pre-approved. Approval is at the sole discretion of the Engineer

ESCR 570.06 FABRICATION

A) General:

The Fabricator shall provide the concrete mix and structural design required to meet the requirements for precast concrete furniture as follows or as approved by the Engineer:

1. Fabricate the work of this section to the sizes and shapes indicated on the contract drawings and as indicated on the approved shop drawings.
2. Each unit shall weight between 2200 to 3000 lbs. in order to be lifted and transported using a standard size forklift and be maneuverable within a 15 foot wide space.
3. Provide color and finishes as indicated on the drawings and to match Engineer’s samples.
4. Make exposed edges and chamfers sharp, straight and consistent. Provide flat surfaces to true planes.
5. Place and secure in the forms all anchors, clips, inserts, bolts lifting devices, shear ties and other embedded devices required, to ensure that embedments remain in position indicated on the shop drawings or specified. Provide air bleed holes for embedded items as necessary to ensure voids or honeycombs do not form.
6. Place concrete in a continuous operation to prevent seams or planes of weakness from forming in precast concrete units.
7. Provide all openings, recesses or block-outs required.
8. Provide temperature and shrinkage reinforcement in accordance with ACI 318.
9. Reinforce precast units to resist handling, and transportation stresses.
10. Place reinforcement to maintain at least 3/4-inch minimum cover
11. Minor patching in plant is acceptable, provided structural integrity and appearance is not impaired.

B) Curing:

1. Form-cure the work for a minimum of 24 hours.
2. Wet cure for not less than 6 days after being removed from forms
3. Following curing period, allow units to air-dry for not less than an additional 7 days before being loaded for delivery.

C) Casting Tolerances:

Fabricate precast architectural concrete units straight and true to size and shape with exposed edges and corners precise and true so each finished unit complies with the following product tolerances:

1. Length and width of precast units shall not vary more than 1/8 in. Thickness of units to vary not more than 1/8 in. Units 'out of square' more than 6 linear ft. 1/8 in. per ¼ in. total are not acceptable.
2. Inserts: Plus or minus 1/2 inch.
3. Handling Devices: Plus or minus 1 inch.
4. Reinforcing Steel and Welded Wire Fabric: Plus or minus 1/4 inch where position has structural implications or affects concrete cover; otherwise, plus or minus 1/2 inch.

ESCR 570.07 SUBMITTALS

A) Product Data: Submit for Engineer's approval manufacturer's literature, specifications and installation instructions describing the general properties of each material and accessory to be used in the Work.

1. Form Release Agent: Furnish data stating that the product will not stain the concrete surfaces and will not adversely affect the bond of subsequently applied finishes.

B) Engineering Calculations : Submit for Engineer's approval

C) Concrete Design Mixes: Submit for Engineer's approval all design mixes and strength tests to be used.

D) Material Certification: Signed be the manufacturer certifying that each of the following items complies with requirements: concrete materials, reinforcing materials, admixtures and water-absorption test reports.

E) Shop Drawings: Submit for Engineer's approval shop drawings for the fabrication and installation of the Work. Prepare details at an approved scale indicating profiles, cross-sections, dimensions, and arrangement of units; details of units, inserts, and openings, reinforcing for each unit, fabrication tolerances, method of installation and lifting devices necessary for handling and installation.

F) Samples: Submit for Engineer's approval. Label samples to indicate product, characteristics, and location in the Work. Samples will be reviewed for color and appearance only. Furnish sufficient samples to establish the full range of colors and textures for materials exposed in the finished work. Compliance with other requirements is the responsibility of the Contractor.

1. Submit three (3) 18 in. x 18 in. x full product thickness samples prior to fabrication of units or construction of mock-up, using same design mix as proposed for the finished work. On back of samples, record mix design, types and locations of

aggregates, and type and method of finish. Sample acceptance will be for color, appearance and configuration of aggregate, aggregate distribution and depth of exposure only.

a. Match sample on file in the Engineer's office.

2. Anti-Graffiti Coatings: Coat half of each sample with the specified anti-graffiti coating.

ESCR 570.08 QUALITY ASSURANCE

A) The precast concrete furniture producer shall be a plant-certified by either the National Precast Concrete Association (NPCA) or The Precast/ Prestressed Concrete Institute (PCI).

B) Single Source Responsibility:

1. Single Source Responsibility: Obtain concrete deterrent furniture from one source of a single manufacturer. Obtain accessory products used in conjunction with concrete deterrent furniture from sources acceptable to the concrete deterrent furniture manufacturer, and as specified. The concrete deterrent furniture manufacturer shall furnish evidence that the specified materials have been manufactured by the same source and successfully utilized on a yearly basis for a minimum of 5 years on projects of a similar scope to that shown and specified for this Project.

2. Single Source Responsibility Anti-Graffiti Coating: Obtain anti-graffiti coating from one source of a single manufacturer for the entire project. Obtain accessory products used in conjunction with anti-graffiti coating from the anti- graffiti coating manufacturer or from sources acceptable to the manufacturer. The manufacturer shall furnish evidence that the specified materials have been manufactured by the same source and successfully utilized on a yearly basis for a minimum of 5 years .

C) Regulatory Requirements: Comply with applicable requirements of the laws, codes, ordinances and regulations of Federal, State and Municipal authorities. Obtain necessary approvals from the NYC Building Department.

D) Qualified Applicator: The contractor or subcontractor performing the anti-graffiti coating of this section must, within the last five (5) consecutive years prior to the bid opening have successfully completed in a timely fashion at least three (3) projects similar in scope, size and type to the required work. In addition, the contractor or subcontractor must be approved, or certified, or authorized by the manufacturer, and must be eligible to receive the manufacturer's warranty.

E) Mock-Up(s):

1. Build one (1) full sized unit as mock-up, as detailed on contract documents. The Work of this mock-up shall be constructed based on approval of workmanship, construction, texture, and colors of the approved sample.

2. Clean mock-ups with materials and techniques intended for use on the Project.

3. Apply "anti-graffiti" coating to mockup entire exterior face. Demonstrate "anti-graffiti qualities by utilizing 5 standard graffiti marking mediums and removing graffiti.

4. Obtain acceptance of visual qualities of mock-up before proceeding with the final work.

F) Pre-Installation Meeting: Prior to the start of the Work, meet at the Project site to review

methods and sequence of construction, special details and conditions, standard of work, testing and quality control requirements, job organization and other pertinent topics related to the Work.

ESCR 570.09 DELIVERY, STORAGE AND HANDLING

A) Packing, Shipping, Handling, and Unloading: Deliver materials, other than bulk materials to Project site in manufacturer's unopened containers, bundles, pallets or other standard packaging devices; fully identified with name, type, grade, color and size.

B) Storage and Protection: Store on platforms off the ground, in a dry location and protect from weather, soiling and damage. Store aggregates where grading and other required characteristics can be maintained and contamination avoided. Store accessories including metal items to prevent corrosion and accumulation of dirt and oil.

C) Metal Materials: Do not use metal reinforcing, ties, or other components which are coated with loose rust or other deleterious matter that will reduce or destroy bond with mortar and grout.

ESCR 570.10 PROJECT/SITE CONDITIONS

A) Installation Requirements

1. Cold Weather Conditions: Do not install work when the temperature is below 40 deg. F. unless provisions for heating and drying the materials and protecting the completed work. Do not build upon frozen work. Do not lay units having a film of water or frost on their surfaces.

2. Hot Weather Conditions: Do not install work when the temperature is above 100 deg. F. or 90 deg. F with a wind velocity greater than 8 mph.

B) "Anti-Graffiti" Coating Application Conditions: Maintain ambient temperature above 40 degrees F during and 24 hours after installation. Do not proceed with application on materials if ice or frost is covering the substrate. Do not proceed with application if ambient temperature of surface exceeds 100 degree F. Do not proceed with the application of materials in rainy conditions or if heavy rain is anticipated with 4 hours after application.

ESCR 570.11 WARRANTIES

A) Warranties specified in this Article shall not deprive the City of New York of other rights the City of New York may have under other provisions of the Contract Documents and are in addition to and run concurrent with other warranties made by the Contractor under requirements of the Contract Documents.

□□ Special Warranty, Anti-Graffiti Coating: Provide a manufacturer's labor and material performance warranty, for a period for two (2) years stating that the anti-graffiti coating will be free of defects related to workmanship or material deficiency. Defective areas, (where anti-graffiti coating effectiveness does not meet the specified limits in the opinion of the City of New York) shall be retreated by the system manufacturer. Upon notification of defects, within the warranty period, reseal areas at the convenience of the City of New York.

ESCR 570.12 METHODS

A) GENERAL: Prepare and install the work of this Section, including components and accessories in accordance with the manufacturer's instructions, except where more stringent requirements are shown or specified, and where project conditions require extra

precautions or provisions to ensure satisfactory performance of the Work.

B) EXAMINATION: Verification of Conditions: Examine the areas to receive the Work and the conditions under which the Work would be performed. Remedy conditions detrimental to the proper and timely completion of the Work. Do not proceed until unsatisfactory conditions have been corrected. Examine construction to verify acceptable conditions prior to installation.

C) INSTALLATION: Surface Preparation: Clean surfaces before installation to remove dirt, dust, debris, loose material and other foreign matter detrimental to proper bonding.

Lay Out of Units: Lay out units in advance for accuracy and as indicated on drawings.

D) ANTI-GRAFFITI COATING APPLICATION

1. Manufacturer's Technical Representative: At the start of the installation and periodically as work progresses provide the services of the anti-graffiti manufacturer's technical representative at the job site as often as deemed necessary by the manufacturer to advise on phases of this work.

2. Surface Preparation: Concrete surfaces to receive coating shall be cleaned of dirt, oil, graffiti, grease, laitance, and other contaminants. All other surfaces shall be cleaned by mid-pressure water (1500 psi). Pressure wash all surfaces scheduled to receive anti-graffiti coating unless manufacturer recommends other acceptable method of cleaning. Remove dirt, dust and materials that will interfere with the proper and effective application of the anti-graffiti coating. Check the compatibility of all coatings and other material contiguous to or scheduled to be used with the anti-graffiti coating.

3. Application

a) Anti-graffiti coating shall be applied as per manufacturer’s written application instructions and recommendations. Apply as a minimum 2 full coats (depending on porosity of CMU) allowing first coat to dry as per manufacturer's requirements.

b) Apply at temperature and weather conditions recommended by the manufacture or written in this specification. Surface residue shall be brushed out thoroughly until they completely penetrate into the surface. Protect treated areas from rain and other surface water for a period of not less than four hours after application.

E) TESTING AND INSPECTION PROGRAM: Testing and inspection will be performed, at any time during the progress of the Work, by an independent testing agency per the Contract. Allow access at any time to the manufacturer’s plant as required by the City, Engineer and Engineer’s representatives to inspect Work.

F) ADJUSTING: Remove and replace defective materials; correct defective workmanship; leave work clean.

G) CLEANING: Removal of Excess Materials: Execute work in as clean a manner as possible, removing excess materials.

H) PROTECTION: Precast units shall remain in a protective cover, approved by the Engineer, until the completion of the entire project or as directed by the Engineer.

ESCR 570.13 MEASUREMENT

The quantity to be measured for payment shall be the number of each concrete deterrent furniture unit actually manufactured and installed to the satisfaction of the Engineer.

ESCR 570.14 PRICE TO COVER

The unit price bid for each Concrete Deterrent Furniture shall cover the cost of furnishing all labor, materials, equipment, insurance and incidentals required to manufacture, deliver and install concrete deterrent furniture, complete, and shall include, but not be limited to, the design ing furnishing and incorporating of all concrete; reinforcement; curing; finishing; samples; coatings; testing equipment; all in accordance with the contract drawings, the specifications and the direction of the Engineer.

Payment will be made under:

Item No.	Item	Pay Unit
ESCR 570	CONCRETE DETERRENT FURNITURE	EA

END OF SECTION

SECTION 832 – SPECIFICATION FOR LEAD PAINT REMOVAL FROM BRIDGES

PART 1.0 GENERAL

1.01 PURPOSE

A. This Specification sets out the requirements for worker protection, containment system design and use, environmental protection, and waste disposal during the removal and disposal of coatings containing lead and other toxic metals from bridges. The purpose is to assure that the public, workers, and the environment are properly protected from potential exposure to toxic metals in these coatings during paint removal operations. All provisions associated with containment also apply to the removal of coatings that do not contain toxic metals.

B. The Contractor is responsible and liable for the remediation of all damages caused by the Work, and any required cleanup or repair activities.

1.02 GENERAL

A. The Contractor is responsible for compliance with all personal monitoring required under OSHA regulations, and is required to maintain:

1. A full-time competent person at the project site to observe and monitor work activities, and to oversee the implementation of the Worker Protection Plan, Environmental Protection Plan, Hazardous Waste Treatment and Disposal, and Containment performance. The competent person shall be authorized to take prompt corrective measures to rectify any observed problems with the control over emissions, protection of workers, and management of the waste streams. The competent person shall be independent of all other responsibilities on the project and shall not serve in a worker or supervisory capacity. The competent person shall not be assigned any other responsibilities or work assignments which prevent him/her from continuously fulfilling the responsibilities of a competent person. The competent person must be on the job site whenever lead, or other hazardous metals, is disturbed. A back-up competent person shall be designated in the event that the full-time competent person is absent from the job site. The competent person must be SSPC C-3 and C-5 trained and have OSHA 40-hour HAZWOPER certification plus annual 8 hour refresher training. Qualifications of the competent person are presented in Appendix A.

2. A Certified Industrial Hygienist (CIH) to oversee the development of Worker Protection Plans and to conduct monthly site visits to confirm that the Work is being performed in accordance with the contract requirements. Qualifications of the CIH are presented in Appendix A.

B. The Engineer will be employing an environmental consultant to monitor the paint removal operations and ensure compliance with Contract specifications and applicable regulations. The Contractor shall coordinate project activities with the environmental consultant and initiate any action that is necessary to correct specification violations identified by the environmental consultant. The environmental consultant has the authority to halt any operation involving the generation, handling, or disposal of project waste and debris if the operation violates the requirements of this specification, even if the competent person or CIH/IH did

not observe the violation. In the event of a conflict between the observations of the environmental consultant and the Contractor, the findings of the environmental consultant shall prevail. The presence or activities of the environmental consultant do not relieve the Contractor of the responsibility to fully comply with all aspects of this Section.

C. Project submittal requirements are itemized in Appendix A. Terms and definitions are provided in Appendix B.

1.03 CONTRACTOR QUALIFICATIONS

A. Unless otherwise specified in the Special Provisions, the painting Contractor or subcontractor that is directly performing the field cleaning and painting work shall possess SSPC-QP1 and QP2 Category A certification when a ventilated, negative pressure containment is used, and Category A or B certification for surface preparation methods that do not require a ventilated, negative pressure containment. Certifications shall be in place at the time of bid and throughout the duration of the project.

1.04 COMMUNITY NOTIFICATION

A. For projects involving abrasive blast cleaning, the Contractor shall be responsible for Community Notification. Community Notification shall consist of developing and assembling a community Notification Package and distributing the Package to the affected community through mailing to the community boards, council members, borough president, and members of the New York State Legislature. The Community Notification package shall consist of the NYCDOT brochures and project-specific flyer, both to be printed by the Contractor. The affected community shall be notified of planned abrasive blasting activities as well as other removal activities requiring MPT plans (lane closures/diversions) 30 days in advance. The development and distribution of the Package must be coordinated with the Engineer.

B. NYCDOT Brochures contain information on lead and its effect; various sources of lead; deleading operations specific to bridge projects; precautions to eliminate or minimize exposure undertaken by both the City and the community; and in case of a large release, steps that the City will implement to minimize community exposure (emergency response plan).

C. The Contractor will be responsible for developing project-specific flyers providing information (multi-language versions, if necessary) on the nature of the removal work, the time period of the work and its duration, and contact names and telephone numbers. The flyers shall be approved by the Engineer prior to distribution. The contractor will be responsible for posting the information around the perimeter of the job site.

1.05 REGULATORY COMPLIANCE

A. Comply with the requirements of this Section and all applicable Federal, State, and City laws, codes, and regulations, including, but not limited to the regulations of the United States Environmental Protection Agency (USEPA) and Occupational Safety and Health Administration (OSHA), New York State Department of Environmental Conservation (DEC), New York State Department of Health (NYS DOH), New York State Department of Labor (NYS DOL), and the New York City Department of

Environmental Protection (NYC DEP). Codes, Rules and Regulations of the State of New York (NYCRR) are administered by the NYS Department of Environmental Conservation, Albany, NY. EPA regulations are administered by the US Environmental Protection Agency, Region 2, NY, NY.

B. Identification of the items in this specification that are of specific interest to the Engineer in no way relieves the Contractor of the responsibility to comply with all applicable legal requirements. Moreover, compliance with Contract specifications does not relieve the Contractor of the obligation to comply with other applicable requirements. Contractor is required to comply with the Final Environmental Impact Statement (FEIS). If a Federal, State, or City regulation is more restrictive than any of the requirements of this Section, the more restrictive requirements shall apply.

1.06 REFERENCE STANDARDS

A. **Latest Edition** - the latest edition of the following acts, regulations, guides, and standards form a part of this Specification. In the event of a conflict, comply with the most restrictive requirements, including any new or revised regulations or codes that may take effect after the contract is awarded. Maintain at the jobsite, a copy of all applicable reference standards.

B. **American Association of State Highway and Transportation Officials (AASHTO)**

1. Standard Specifications for Highway Bridges
2. Manual for Maintenance Inspection of Bridges

C. **ASTM International (ASTM)**

1. ASTM E90, Test Method for Laboratory Measurement of Airborne Sound Transmission Loss of Building Partitions and Elements

D. **American Industrial Hygiene Association (AIHA)**

1. Environmental Lead Laboratory Accreditation Program (ELLAP) - paint, soil, air, dust
2. Industrial Hygiene Accredited Laboratories (IHLAP) – metals

E. **Code of Federal Regulations (CFR)**

1. 29 CFR 1910, Occupational Safety and Health Regulations for General Industry
2. 29 CFR 1910.20, Access to Employee Exposure and Medical Records
3. 29 CFR 1910.132, General Requirements for Personal Protective Equipment
4. 29 CFR 1910.133, Eye and Face Protection
5. 29 CFR 1910.134, Respiratory Protection
6. 29 CFR 1910.147, The Control of Hazardous Energy (Lockout/Tagout)
7. 29 CFR 1910.333, Selection and Use of Work Practices
8. 29 CFR 1910.1000, Air Contaminants
9. 29 CFR 1910.1200, Hazard Communication
10. 29 CFR 1926, Occupational Safety and Health Regulations for the Construction Industry
11. 29 CFR 1926.16, Rules of Construction
12. 29 CFR 1926.20, General Safety and Health Provisions
13. 29 CFR 1926.21, Safety Training and Education
14. 29 CFR 1926.24, Fire Protection and Prevention

15. 29 CFR 1926.28, Personal Protective Equipment
16. 29 CFR 1926.32, Definition of Competent Person
17. 29 CFR 1926.51, Sanitation
18. 29 CFR 1926.52, Noise Exposure
19. 29 CFR 1926.55, Gases, Vapors, Fumes, Dusts, and Mists
20. 29 CFR 1926.57, Ventilation
21. 29 CFR 1926.59, Hazard Communication
22. 29 CFR 1926.62, Lead
23. 29 CFR 1926.101, Hearing Protection
24. 29 CFR 1926.104, Safety Belts, Lifelines, and Lanyards
25. 29 CFR 1926.150, Fire Protection
26. 29 CFR 1926.151, Fire Prevention
27. 29 CFR 1926.152, Flammable Liquids
28. 29 CFR 1926.154, Temporary Heating Devices
29. 29 CFR 1926.200, Accident Prevention Signs and Tags
30. 29 CFR 1926.353, Ventilation and Protection in Welding, Cutting and Heating
31. 29 CFR 1926.354, Welding, Cutting and Heating in Way of Preservative Coatings
32. 29 CFR Subpart K (Sections 400 – 449) - Electrical
33. 29 CFR 1926.450 - 454, Scaffolding
34. 29 CFR 1926.500 - 503, Fall Protection
35. 29 CFR 1926.1118, Inorganic Arsenic
36. 29 CFR 1926.1126, Chromium VI (hexavalent chromium)
37. 29 CFR 1926.1127, Cadmium
38. 29 CFR 1926 Subpart AA (Confined Spaces in Construction)
39. 40 CFR 50, National Primary and Secondary Ambient Air Quality Standards
40. 40 CFR 58, Ambient Air Quality Surveillance
41. 40 CFR 60, App A, Method 9, Visual Determination of the Opacity of Emissions from Stationary Sources
42. 40 CFR 60, App. A, Method 22, Visual Determination of Fugitive Emissions from Material Sources and Smoke Emissions from Fires
43. 40 CFR Chapter I, Subchapter D (Parts 100 – 149), Water Programs
44. 40 CFR 261, Appendix II, Toxicity Characteristic Leaching Procedure
45. 40 CFR 262, Standards Applicable to Generators of Hazardous Waste
46. 40 CFR 263, Standards Applicable to Transporters of Hazardous Waste
47. 40 CFR 264, Standards for Owners and Operators of Hazardous Waste Treatment, Storage, and Disposal Facilities
48. 40 CFR 265, Interim Status Standards for Owners and Operators of Hazardous Waste Treatment, Storage, and Disposal Facilities
49. 40 CFR 265, Subpart C, Preparedness and Prevention
50. 40 CFR 265, Subpart D, Contingency Plan and Emergency Procedures
51. 40 CFR 265.16, Personnel Training
52. 40 CFR 268, Land Disposal Restrictions
53. 40 CFR 302, Designation, Reportable Quantities and Notification
54. 40 CFR 355, Emergency Planning and Notification
55. 49 CFR 171-179, Hazardous Materials Regulations

F. **EPA Methods**

1. SW 846, Test Methods for Evaluating Solid Waste - Physical/Chemical

Methods
2. Method 1311, Toxicity Characteristic Leaching Procedure (TCLP)
3. Method 3050, Acid Digestion of Sediment, Sludge, and Soils

G. **National Fire Prevention Association**

1. NFPA 70E, Standard for Electrical Safety in the Workplace
2. NFPA 701, Standard Methods of Fire Tests for Flame Propagation of Textiles and Films

H. **National Institute of Occupational Safety and Health (NIOSH) Methods**

1. Method 7048, Cadmium
2. Method 7082, Lead
3. Method 7600, Hexavalent Chromium
4. Method 7900, Arsenic

I. **The Society for Protective Coatings (SSPC)**

1. Guide 6, Guide for Containing Debris Generated During Paint Removal Operations
2. Guide 7, Guide for the Disposal of Lead-Contaminated Surface Preparation Debris
3. Guide 12, Guide for Illumination of Industrial Painting Projects
4. Guide 16, Guide to Specifying and Selecting Dust Collectors
5. SSPC-TU 7, Conducting Ambient Air, Soil, and Water Sampling During Surface Preparation and Paint Disturbance Activities
6. QP-1, Standard Procedure for Evaluating the Qualifications of Painting Contractors (Field Application to Complex Structures)
7. QP-2, Standard Procedure for Evaluating the Qualifications of Painting Contractors to Remove Hazardous Paint

J. **Codes, Rules and Regulations of the State of New York (NYCRR)**

1. Title 6, Chapter III, Subchapter B, Air Resources
   a) Part 211.2, Air Pollution Prohibited
   b) Part 257, Ambient Air Quality Standards
2. Title 6, Division of Environmental Remediation
   a) Part 595, Releases of Hazardous Substances
   b) Part 597, List of Hazardous Substances
3. Title 6, Chapter X, New York State Pollutant Discharge of Water Resources Elimination System
4. Title 6, Chapter IV, Subchapter B, Solid and Hazardous Waste Law
   a) Part 364, Waste Transporter Permits
   b) Part 370, Hazardous Waste Management
   c) Part 371, Identification and Listing of Hazardous Wastes
   d) Part 372, Hazardous Waste Manifest System and Related Standards for Generators, Transporters, and Facilities
   e) Part 373, Treatment, Storage, and Disposal Facilities

K. **New York State DOT Specifications**

1. NYSDOT Standard Specifications for Highway Bridges
2. NYSDOT Safety Bulletin SB-94-4, Histoplasmosis

L. **City of New York**

1. Administrative Code of the City of New York, Section 16, NYC Department of Sanitation Regulations
2. Title 24, Chapter 219, New York City Noise Control Code
3. Title 29, Chapters 100-109, Citywide Construction Noise Mitigation
4. Title 15, Chapter 14, Rules Concerning the Use of Ultra-Low Sulfur Fuel and Emissions Control Technology on City Motor Vehicles

M. **Suppliers (Equipment and Material Manufacturers) Published Instructions**

1.07 SUBMITTALS – See Appendix A.

PART 2.0 PRODUCTS

2.01 CONTAINMENT MATERIALS AND EQUIPMENT

A. Supply all materials needed to contain paint removal debris in accordance with the requirements of this Specification and Construction Details. This may include, but is not limited to, ground covers, rigging, scaffolding, planking, containment materials, tarpaulins, dust collection and ventilation equipment, HEPA vacuums, water booms, boats with skimmers, and all other containment materials that may be needed.

B. Flame retardant containment materials are to be used. Tarps and other sheet materials must pass the requirements contained in NFPA 701, Test Method 2.

C. Use low sulfur fuels (less than 15ppm sulfur content) for all non-road combustion engines that are 50 HP or greater (e.g., generators, dust collection equipment, etc.) in accordance with Title 15, Chapter 14 Rules.

D. Properly maintain all equipment in accordance with the NYC Noise Control Code and Citywide Construction Noise Mitigation. Applicable regulations and compliance information may be found on the NYCDEP's website. For example, the NYCDEP has provided a list of "Construction Noise Control Products and Vendor Guidance Sheets".

E. Supply the Engineer with one (1) portable light meter with a scale of 9 to 200+ foot-candles. The meter will be returned to the Contractor upon completion of the Work.

F. Supply the Engineer with one (1) portable sound level meter for ensuring compliance with NYCDEP Noise Code. Sound level meter shall be equipped with data logging and have the capability to calculate L10 and L90 in both A and C scales at slow and fast response.

G. Do not use any materials until they have been accepted by the Engineer.

2.02 MONITORING AND TESTING EQUIPMENT

A. **High Volume Ambient Air Monitoring Equipment**

1. Provide, and maintain in good operating condition, all equipment necessary for the monitoring of airborne emissions in accordance with the provisions of this specification. If site conditions do not permit permanent installation for the duration of the project, install and remove the equipment each day at the times and locations requested by the environmental consultant. The equipment will be calibrated and used by the environmental consultant. Equipment requirements include:

    a) High volume air monitoring equipment approved for sampling in accordance with 40 CFR 50, Appendix B, equipped with collection

heads for total suspended particulate (TSP). Provide mass flow or volumetric flow controlled units, equipped with a flow event recorder and an adequate supply of flow charts. Provide look up tables for the volumetric controlled units. Verify that the monitors are properly maintained in accordance with the manufacturers' instructions. The environmental consultant will provide the filters.

b) An ample supply of parts or spare units in order to provide fully operational TSP monitors on the project site. Unless otherwise directed by the Environmental Engineering Unit, provide at least four (4) monitors each day for each work area that involves dust creating activities.

c) One variable resistance calibration kit with a current (within 1 year) calibration certificate and two (2) slack-tube water manometers (15-0-15 inches), or calibrated digital manometers (0 to 50 or 100 in. WC).

d) All equipment (e.g., generators, power cords, fuel, etc.) needed to simultaneously operate the monitors. The monitors will be sited by the environmental consultant adjacent to the bridge or at distances away from the bridge approximately equal to three times the bridge height. Provide enough support equipment to accommodate this entire range of monitor placement.

e) Security and/or secure overnight storage of the equipment (e.g., in jobsite trailers maintained by the Contractor). Note that if the paint removal work is being conducted during evening hours, professional, armed security personnel may be needed since the monitors cannot be placed into secure storage during these times.

B. **Worker Exposure and Regulated Area Monitoring Equipment**

1. Supply the instrumentation needed for the monitoring of construction and consulting personnel exposure, and regulated area exposures. Provide all equipment needed for its operation (e.g., batteries, chargers, primary calibration source (soap bubble meter), secondary calibration source (rotameters), cassettes, etc.).

2. Provide all necessary air monitoring cassettes and filter paper for exposure monitoring. Utilize appropriate air sampling cassettes and filter paper for monitoring exposure to lead and other toxic metals.

2.03 EMERGENCY RESPONSE EQUIPMENT

A. Provide all personal protective equipment and emergency response equipment needed for the Project as outlined in the Contractor's Emergency Response Plan. Emergency response kits must be in place at all locations where petroleum or chemical products are being utilized.

B. Contractor shall provide spill kits ready for immediate use in case of a spill at release points. The spill kits are to be equipped to respond to oil and chemical spills, have all materials inside of the spill kits, and marked to be easily identifiable.

C. Provide inspected, operable, and charged fire extinguishers where the contractor designates at areas where petroleum and flammable products are to be stored. The fire extinguishers are to be visible in case they are needed and stored in such

a manner that access to them is unobstructed.

D. Contractor shall assure that all pressure release mechanisms are in the open position so as to prevent storage containers from becoming over pressurized and explode.

E. Contractor shall obtain all the required FDNY permits when storing petroleum, chemical, hazardous, and flammable materials/liquids so in case of a fire or need to contact and have the FDNY come on site, FDNY knows what type of materials are stored on site.

2.04 PERSONAL PROTECTIVE EQUIPMENT AND HYGIENE FACILITIES

A. At each site, provide all personal protective clothing and equipment (PPE) needed to protect Contractor workers, City employees and City representatives (REI Consultants and environmental consultant), from project hazards. Repair or replace PPE as required to assure that it continues to provide its intended purpose. The Contractor is responsible for proper cleaning and disposal of all PPE.

B. Provide climate-controlled decontamination facilities.

1. Supply the number of facilities as dictated by 29 CFR 1926.51, site conditions, the Contractor's sequence of operations, and as approved by the Contractor's CIH and Engineer.

2. Provide facilities which contain a "clean" area where workers can remove and store their street clothing when they arrive on site; a shower room with hot and cold running water, soap and clean towels; and a "dirty" area where workers can remove their work clothing at the end of their work shift. The "clean" area and the "dirty" area shall each have a separate entrance.

C. Provide all potable water required for drinking and hygiene purposes.

2.05 WASTE CONTAINERS

A. **Hazardous Waste**

1. Provide USDOT-approved drums, tanks, roll-offs, or other containers of the appropriate size and type in accordance with 49 CFR 173, 178, and 179 (that are suitable for any hazardous waste (liquid and solid) generated on the project. Use containers that are resistant to rust and corrosion (painted, if constructed of steel), that have tight fitting and locking lids or covers, and which are water resistant and leak proof. All containers must be in new condition, be free of any contamination and have no damage. Drums and/or barrels shall be stored on pallets or similar dunnage so that the bottom is not in contact with the ground and is capable of being inspected for leakage and corrosion. Cover the ground underneath the waste with a tarpaulin. Liquid wastes are to be stored inside a secondary containment of sufficient volume to hold the contents of the entire liquid waste in the storage area if a spill were to occur. All hazardous waste must be stored on City property.

2. Assure that the dry volume capacity of the containers, in cubic yards, is clearly marked on all containers, and that they are labeled as required by applicable Federal, State and City regulatory requirements.

B. **Construction Waste** - Provide all containers for non-hazardous construction waste. Use containers that are free of loose debris when brought on-site. Non-hazardous waste must be segregated from the storage of hazardous or regulated

wastes.

C. **Spent Solvents** - Provide appropriate containers for spent solvents. Spent solvents shall be managed as hazardous waste unless laboratory analysis indicates otherwise. Containers shall be corrosion resistant and non-reactive to the solvents. Review solvent MSDS/SDS to ensure compatibility with container materials and storage requirements. Containers shall be labeled in accordance with all applicable Federal, State, and City regulations and stored on City property at least 50 feet from the City property boundary. Store spent solvents in secondary containment. Protect the containers from sources of heat, ignition, and any other conditions which could cause the contents to expand, catch fire, or the containers to explode.

2.06 CLEANLINESS OF MATERIALS AND EQUIPMENT

A. Provide equipment and materials that are free of loose dust and debris when brought onto the bridge site. This includes, but is not limited to, containment and ventilation equipment, scaffolding, planking, metal sheeting, suspended platform materials, personal protective equipment, waste storage containers, trailers, and paint removal and abrasive recycling equipment.

B. Clean the materials and equipment and assure that they are free of loose dust and debris at the end of each shift and upon removal from the Work site. Use HEPA vacuums and/or wet wipe with an approved cleaning solution. Verify proper cleanliness by wiping a cloth across the surface. If dust or debris is dislodged, additional cleaning is required before transporting the materials or equipment off site (See Section 3.06). Settled dust (lead) sampling (wipe sampling) may be performed by the environmental consultant in order to verify cleanliness of all equipment and materials. An acceptance criteria of <400 µg/sq ft will be used. All filters in equipment, including but not limited to, dust collectors, recycling units, and HEPA vacuums, must be removed and replaced prior to equipment leaving the project site.

PART 3.0 - EXECUTION

3.01 WORKER PROTECTION

A. **General**

1. Conduct the Work in strict accordance with Federal OSHA, State, and City regulations governing worker protection. Develop a comprehensive Worker Protection Plan addressing the protection of the health and safety of workers from jobsite hazards, including but not limited to fall protection, confined space (if applicable), lock out/tag out, hearing and eye protection, and exposure to hazardous materials or conditions. Note: If Sections 831 and 832 are specified for the work, the requirements of both Sections can be combined into a single Worker Protection Plan.

2. When disturbing paints, institute engineering and work practice controls to reduce worker exposures to lead and other toxic metals to as low as feasible. Work practices that disturb paints consist of, but are not limited to, paint removal activities, cutting, grinding, removal of concrete encasement, hot work, and power washing. Present the proposed engineering and work practice controls in the Worker Protection Plan for Engineer review.

3. Employ the services of a Certified Industrial Hygienist (CIH) to develop the Worker Protection Plan and review all exposure monitoring and medical surveillance results. The CIH shall also provide general oversight of the work either directly or with the assistance of an Industrial Hygienist (IH). The CIH is also required to conduct a monthly site visit and issue a monthly summary report of activities and monitoring results. See Appendix A for the qualifications of the CIH and IH, and an itemization of the monthly CIH reporting requirements.

4. In addition to the CIH, assign a competent person to the Work site. See Appendix A for the qualifications of the competent person. Have the competent person inspect the Work site on a daily basis for compliance with the requirements of this Section and the approved Worker Protection Plan and prepare a daily report or daily log of observations made. Maintain the information at the project site and make it available to the Engineer or environmental consultant for review at any time. The competent person shall have no other responsibilities on the project. The competent person cannot serve as a supervisor, foreman or production worker on the project.

5. Note that all worker protection requirements apply to Contractor and Subcontractor personnel working for the Contractor.

6. The requirements identified in this Section 3.01 regarding exposure to toxic metals are based on 29 CFR 1926.62, but the Contractor must protect the employees from exposure to any of the other toxic metals or materials which may be present in the paint and/or abrasive, as applicable, in addition to lead.

B. **Pigeon Droppings/Histoplasmosis**

1. In addition to controlling exposures to lead and other toxic metals, take special precautions when working in areas where pigeons have nested.

2. Develop and implement a worker protection plan under the direction of the CIH, for the inspection and removal of pigeon droppings in accordance with NYSDOT Safety Bulletin SB-94-4 (copy attached) in Appendix C. Note: If Sections 831 and 832 are specified for the work, only a single Histoplasmosis plan is required.

3. At a minimum, use disposable gloves, whole body protective clothing and a respirator while inspecting or removing the debris, followed by thorough washing of hands, face, and forearms before eating, drinking, or smoking. Provide respiratory protection appropriate to the level of exposure for all workers. Verify that all workers involved in cleaning activities involving exposure to pigeon droppings have medical clearance to utilize personal protective equipment such as respiratory protection and have been fit tested.

4. Remove and properly dispose all pigeon droppings located within containment enclosures.

C. **Worker Protection Plan**

1. Develop a written Worker Protection Plan under the direction of a CIH to establish and implement practices and procedures for protecting the health and safety of employees from Project hazards in accordance with

applicable OSHA requirements.

2. The Worker Protection Plan must include provisions for the protection of workers from toxic metals or materials when exposures to lead or other toxic metals or materials are above the OSHA Action Level. Note that while this specification addresses the protection of employees exposed to lead and other toxic metals, the Worker Protection Plan must address the protection of workers from all Project hazards. Requirements for the content of the Worker Protection Plan are presented in Appendix A.

3. Revise and update the program at least annually during the portion(s) of the project which involve the disturbance of toxic metals. Verify that the CIH signs off on all updates and revisions. If the review does not result in an update or revision, have the CIH acknowledge in writing that the review was made.

4. Establish methods for complying with this specification and any OSHA standards published for the toxic metals present in the paint (e.g., 29 CFR 1926.62 for lead, 29 CFR 1926.1126 for hexavalent chromium, 29 CFR 1926.1127 for cadmium, and 29 CFR 1926.1118 for inorganic arsenic). Toxic metals and materials may also be present in the paint for which OSHA has not developed a comprehensive health and safety standard. In these cases, include statements that appropriate measures will be taken to assure that the workers will not be exposed above the Permissible Exposure Limit (PEL) or Threshold Limit Value (TLV) as identified in 29 CFR 1926.55.

5. Identify the methods of compliance that will be used to reduce worker exposures to toxic metals and materials. Rely on respiratory protection only after feasible engineering and work practice controls have been first implemented to reduce airborne exposures.

D. **Exposure Monitoring/Initial Assessment**

1. Conduct initial personal exposure monitoring unless objective data is available to prove that exposures from a given activity cannot exceed the Action Level for lead or other metals contained in the coating. Provide the objective data to the Engineer in writing, signed by the CIH. Rely upon this data in lieu of monitoring only upon acceptance by the Engineer or Environmental Consultant.

2. Collect representative personal air samples at the beginning of the lead exposure work (at project start-up) to determine employee exposures to lead and other toxic metals that might be present in the coating. Tasks resulting in the potential exposure to toxic metals include, but are not limited to, paint removal activities, installation of lead paste in cables, work site cleanup, containment movement, hot work, and debris handling operations.

3. Collect full shift (at least 7 hours) air samples for workers in each job classification in each exposure area, and when requested, collect samples on the Engineer and the Engineer’s representatives (REI’s or environmental consultant personnel). Provide the Engineer and representatives with the results of their analysis within the same five-day notification period required for the employees.

4. When lead is present, provide personal protective equipment for workers during the initial monitoring. Anticipate exposure levels as dictated by 29 CFR 1926.62 and as specified below. A few activities in addition to those identified by OSHA are included. Use the same level of protection when other toxic metals are found in the coating, unless OSHA has developed a comprehensive health standard for that metal (e.g., cadmium, hexavalent chromium, and inorganic arsenic). In those cases, implement the protection requirements of the standard specific to that metal.

    a) Assume an exposure of up to 10 times the PEL (500 µg/m^3 for an 8-hour shift): Manual demolition of structures containing lead-containing coatings or paint (e.g., dry wall), manual scraping, manual sanding, heat gun applications, power tool cleaning with dust collection systems, and spray painting with lead paint. Although not identified in 29 CFR 1926.62, include chemical stripping, water washing, centrifugal wheel blasting, and the operation of abrasive grit recovery equipment in this category.

    b) Assume an exposure of up to 50 times the PEL (2,500 µg/m^3 for and 8-hour shift): Using lead-containing mortar, lead burning, or conducting the following activities where lead-containing coatings or paint are present: rivet busting, power tool cleaning without dust collection systems, cleanup activities where dry expendable abrasives are used, and the movement and removal of abrasive blasting enclosures. Although not identified in 29 CFR 1926.62, include vacuum blasting, water jetting, and wet abrasive blasting removal of paint in this category.

    c) Assume an exposure in excess of 2,500 µg/m^3: Activities involving lead containing coatings or paint on structures disturbed by abrasive blasting, welding, cutting, and torch burning.

    d) During any of the above activities, provide appropriate respiratory protection, personal protective clothing and equipment, change areas and washing facilities, showers, blood lead and zinc protoporphyrin monitoring, and employee training. Maintain the protection as specified above until the test results are received; then modify the protection measures as necessary.

    e) If inorganic arsenic, cadmium or hexavalent chromium is present in the coating, provide personal protective equipment that prevents contact with the skin or eyes and washing facilities capable of removing these metals from the skin.

5. Collect and analyze all air samples according to the appropriate NIOSH method, or equivalent, for the metal of concern (e.g., Method 7082 for lead, Method 7048 for cadmium, Method 7600 for hexavalent chromium, and Method 7900 for inorganic arsenic). Note that monitoring for hexavalent chromium requires the use of a PVC filter. Only use laboratories that meet the qualification requirements established under Appendix A, and which have been approved by the Engineer.

6. Conduct periodic exposure monitoring of Contractor workers and City Agents and provide written employee notifications within five days of receipt of results in strict accordance with the applicable OSHA standard

for the metal of concern (e.g., 29 CFR 1926.62 for lead). At a minimum, this requires monitoring at project start up, and after any changes in work practices are made which could have an effect on airborne exposures. If there is no OSHA comprehensive health standard for the detected metal, conduct the monitoring and employee notification based on the requirements of OSHA 29 CFR 1926.62. Provide the Engineer with the results of any subsequent employee monitoring in the monthly CIH report.

7. Maintain an accurate record of all air monitoring. The record should include at least the following information; date of sampling; sampling location; operation that is being monitored; number, duration and results of samples taken; type of personal protective equipment; name, identification number, and job classification of employees represented by the monitoring.

E. **Action Level**

1. The Action Level for lead is 30 µg/m^3 as an eight (8) hour Time Weighted Average (TWA), the Action Level for cadmium is 2.5 µg/m^3 as an 8 hour TWA, the Action Level for hexavalent chromium is 2.5 µg/m^3 as an 8 hour TWA, and the Action Level for inorganic arsenic is 5 µg/m^3 as an 8 hour TWA. For other metals that are found in the coating, and for which no Action Level exists, establish the Action Level at 1/2 of the PEL. If a PEL does not exist, establish the Action Level at 1/2 of the Threshold Limit Value (TLV) found in Appendix A of 29 CFR 1926.55 (e.g., if the TLV is 5 µg/m^3, establish the Action Level at 2.5µg/m^3).

2. If airborne exposures to toxic metals are detected, but are below the Action Level, provide the worker training required by the OSHA standard for the respective metal, and hand wash facilities.

3. If airborne exposures to toxic metals are at or above the Action Level, invoke the following protective measures, as required by the OSHA standard for the respective metal:

   a) Written Worker Protection Plan
   b) Exposure Monitoring
   c) Housekeeping
   d) Employee Medical Surveillance and Medical Removal Protection
   e) Employee Information and Training
   f) Signs and Regulated Areas
   g) Recordkeeping

F. **Permissible Exposure Limit (PEL) and Threshold Limit Value (TLV)**

1. The PEL for airborne lead exposure is 50 µg/m^3 as an 8 hour TWA. The PEL for cadmium is 5 µg/m^3 as an 8 hour TWA, the PEL for hexavalent chromium is 5 µg/m^3 as an 8 hour TWA, and the PEL for inorganic arsenic is 10 µg/m^3 as an 8 hour TWA. The PEL/TLVs for other metals can be found in 29 CFR 1926.55.

2. In the event that extended work shifts are allowed, use the following formula to adjust the PEL: Adjusted PEL = 8 hr. PEL x (8 □ hours worked in a day). The PEL may only be reduced; never increased.

3. In addition to complying with the requirements identified when exceeding the Action Level, invoke the following protective measures when the

airborne exposure to a toxic metal found in the coating exceeds the PEL or TLV:

a) Engineering and Work Practice Controls
b) Respiratory Protection
c) Protective Clothing and Equipment
d) Hygiene Facilities and Practices

G. **Respiratory Protection**

1. After feasible engineering controls and work practices have been implemented, use respiratory protection if necessary to maintain employees' exposures to lead and other toxic metals below the PEL or TLV. Require the use of respirators for all employees, inspectors, observers, or other personnel who enter areas where airborne exposures exceed or are expected to exceed the PEL or TLV, or when entering regulated areas.

2. Develop a written Respiratory Protection Program in compliance with 29 CFR 1910.134 including commitments to provide any necessary pulmonary function tests or medical examinations. When lead is present, include the provisions of 29 CFR 1926.62 in the program. When cadmium is present, include 29 CFR 1926.1127. When hexavalent chromium is present, include 29 CFR 1926.1126. When inorganic arsenic is present, include 29 CFR 1926.1118. Address the selection, use, maintenance and inspection of respirators, and qualifications for respirator users.

3. Treat used respirator cartridges as hazardous waste.

H. **Protective Clothing and Equipment**

1. Provide protective clothing and equipment and ensure they are worn by all employees during the initial assessment and for any employee whose exposures exceed the PEL or TLV.

2. When inorganic arsenic, cadmium and/or hexavalent chromium is present in the coating, provide protective clothing for the skin and eyes regardless of the airborne exposures.

3. Do not allow workers to wear street clothing beneath protective clothing in any areas where exposures to toxic metals exceed the PEL or TLV. This includes personal shoes unless they are fully protected by shoe covers or left on the job site until thoroughly decontaminated.

4. Clean or replace the protective clothing as required by the appropriate OSHA standard for the toxic metal that is present. In the case of lead, clean or replace the clothing weekly if the airborne exposure levels are less than 200 µg/m^3 as an 8-hour TWA, or daily if the exposure levels are greater than or equal to 200 µg/m^3. In the case of inorganic arsenic, the threshold for daily versus weekly cleaning is 100 µg/m^3. In the case of cadmium, clean clothing shall be provided as often as necessary to maintain its effectiveness but no longer than one week. In the case of hexavalent chromium, clean, launder, repair and replace all protective clothing and equipment as needed to maintain its effectiveness. Do not use disposable clothing for any longer than one day and replace the clothing more frequently if it becomes torn or damaged.

5. Do not remove or clean the clothing by any means that reintroduces the

toxic metals into the ambient air, or onto an employee's body, such as brushing, shaking, or blowing. Use HEPA vacuums for employee cleaning prior to removing protective clothing.

6. Store the used clothing in labeled, sealed containers.

   a) Containers shall have the following label if clothing was exposed to lead: "DANGER: CLOTHING AND EQUIPMENT CONTAMINATED WITH LEAD. MAY DAMAGE FERTILITY OR THE UNBORN CHILD. CAUSES DAMAGE TO THE CENTRAL NERVOUS SYSTEM. DO NOT EAT, DRINK OR SMOKE WHEN HANDLING. DO NOT REMOVE DUST BY BLOWING OR SHAKING. DISPOSE OF LEAD CONTAMINATED WASHWATER IN ACCORDANCE WITH APPLICABLE LOCAL, STATE, OR FEDERAL REGULATIONS."

   b) Containers shall have the following label if clothing was exposed to arsenic: "DANGER: CONTAMINATED WITH INORGANIC ARSENIC. MAY CAUSE CANCER. DO NOT REMOVE DUST BY BLOWING OR SHAKING. DISPOSE OF INORGANIC CONTAMINATED WASHWATER IN ACCORDANCE WITH APPLICABLE LOCAL, STATE, OR FEDERAL REGULATIONS."

   c) Containers shall have the following label if clothing was exposed to cadmium: "DANGER: CONTAINS CADMIUM. MAY CAUSE CANCER. CAUSES DAMAGE TO LUNGS AND KIDNEYS. AVOID CREATING DUST."

   d) Containers for clothing exposed to hexavalent chromium shall be labeled in accordance with the Hazard Communications standard (29 CFR 1910.1200).

   e) If the clothing is going to be disposed, either declare the waste as hazardous, or test the waste and apply hazardous waste labels as appropriate based on the results.

7. If the clothing is washed on site, provide containers for the collection and retention of the water after filtration. Comply with the specific testing and disposal requirements in Section 3.05.H.4.

I. **Housekeeping** – Conduct housekeeping and project cleanup as specified in Section 3.06. The project site, including but not limited to, staging areas, work site, regulated areas and project boundaries, must be properly maintained and free of rubbish and trash throughout the duration of the project.

J. **Personal Hygiene Facilities and Equipment**

1. Provide clean lavatory and hand washing facilities in accordance with OSHA sanitation standard 29 CFR 1926.51. Locate the hand washing facilities outside of the regulated area, but in close proximity to the paint removal operation, in an area that is convenient for washing prior to drinking, eating or smoking.

2. Provide showers when exposures exceed the PEL or TLV. Confirm that all employees whose exposures exceed the PEL or TLV shower, including hair, prior to leaving the project site. Clean the decontamination facilities daily during use.

3. Filter and containerize all hygiene water. Comply with the specific testing and disposal requirements in Section 3.05.H.4.

4. Prohibit eating, drinking, smoking, chewing of food or tobacco products, or the application of cosmetics any time that hexavalent chromium is present, in any area where the exposure to any toxic metal exceeds the PEL or TLV, or within regulated areas. Confirm that workers thoroughly wash hands and face prior to undertaking any of these activities.

5. Provide clean lunch and break areas for use by all employees and maintain airborne concentrations in these areas below the Action Level for all toxic metals.

6. Provide clean change area(s) for employees whose exposures exceed the PEL or TLV, or where protective clothing is required. Equip the change area(s) with separate storage facilities for street clothing that are adequately segregated to prevent cross-contamination from work clothing. Assure that employees do not leave the project site wearing any clothing that was worn while performing activities where exposures exceeded the PEL or TLV.

K. **Medical Surveillance and Medical Removal Protection**

1. Provide all employees with initial and periodic medical surveillance as required by the published OSHA health and safety standards for the metal of concern, except that the frequency of blood testing in the case of lead is increased. Conduct blood lead and zinc protoporphyrin (ZPP) sampling and analysis prior to exposure to lead and at monthly intervals thereafter. In addition, conduct exit blood tests for each worker within five working days upon completion of his/her Project activities that involve exposure to lead. Exit blood test shall be offered to the departing employee in writing. Conduct the exit tests even if the departure of the employee occurs prior to the completion of the Contractor's work on the project, and at any time that project activities involving lead exposure will be halted for 30 days or more (e.g., winter shut down).

2. Verify that all medical tests are completed by, or conducted under the supervision of, a physician or other licensed health care professional (PLHCP). Verify that the blood analysis is conducted by laboratories which meet the qualification requirements established in Appendix A, and which have been accepted by the Engineer. Provide the specialized medical surveillance and X-rays required by 29 CFR 1926.1118 for employees exposed to inorganic arsenic.

3. Workers with initial blood lead levels of 40 micrograms per deciliter (µg/dl) are not permitted on the project for any work activities involving exposure to lead.

4. Provide for intervention by the CIH/IH if a blood lead level >25 µg/dl occurs for two or more workers, or there is an increase of 10 µg/dl or more between consecutive tests for any individual worker. Intervention consists of an on-site investigation by the CIH/IH, implementation of corrective action, and notification of the Engineer in the following monthly report.

5. Provide for the temporary removal of employees from exposures above the Action Level for the metal of concern when the blood analysis indicates that

unacceptable results are occurring (e.g., 50 µg/dl or above in the case of blood lead). Protect employees' benefits during any period of medical removal and conduct all tests required by the OSHA standard for the metal of concern during the removal period. In the case of lead, return workers to exposures above the PEL only after two consecutive blood tests taken at least two weeks apart are below 40µg/dl.

6. Provide medical removal protection to workers as required by the OSHA inorganic arsenic, cadmium, and hexavalent chromium standard if workers are exposed to these metals.

7. When inorganic arsenic, cadmium and/or hexavalent chromium is present, provide medical surveillance as required by the appropriate OSHA standard at the time frequency required by that standard. Verify that all examinations are performed by, or under the direct supervision of, a licensed physician.

8. Provide all exam information and test results to the employees in writing within five days of receipt. Provide the Engineer with a letter report within 10 calendar days after the completion of each month signed by the CIH that summarizes all examination and biological monitoring results.

9. For employees who are offered an examination and biological monitoring but choose not to participate or fail to respond, the Contractor shall provide documentation that the examination and monitoring were offered. This shall be in the form of a written declination signed by the employee or, for employees who are no longer on the payroll, a registered letter to the employee’s last known address.

L. **Employee Training and Information**

1. Provide initial and annual refresher training for all employees who will be exposed to toxic metals above the respective Action Levels on any one day in a 12-month period. Include all of the elements of training that are required by the appropriate OSHA standard. If an OSHA standard for the metal does not exist, use the training requirements of 29 CFR 1926.62 as the basis of the training program highlighting the differences as appropriate for the other metals of concern.

2. When other contractors or employers are present at the site, notify them of the nature of the hazards of the work such as lead, noise, and solvent vapors. Advise them of the need to remain out of exposure areas, the warning signs and labeling system in effect, and the potential need for them to take measures to protect their employees in accordance with the applicable OSHA regulations. Notify the Engineer if other contractors are working in regulated areas.

M. **Signs** – As specified in section 3.02, post warning signs around areas or activities that might generate airborne emissions of toxic metals in excess of the Action Levels. Signs are to be in accordance with 29 CFR 1926.200. Access to this regulated area is only allowed by authorized people who have received specific training, undergone initial medical surveillance, have on the proper personal protective equipment and who have on the appropriate respiratory protection as required by the OSHA standards for the toxic metals present.

N. **Parking Areas** - Worker vehicles are not permitted in the regulated areas or within

100 feet of the containment enclosures.

O. **Recordkeeping**

1. Retain all records related to training, medical examinations, blood analysis, exposure monitoring, respirator fit testing, inspections by a competent person, and other related project documentation on file at the project site.

2. Provide the Engineer with letter reports signed by the CIH which summarize all examination results that are indicative of worker exposures to (or which demonstrate proper protection from) toxic metals. In the case of lead, summarize the blood lead and ZPP results, indicate any observed trends, and identify worker intervention or removal provisions that were invoked based on the results. Provide summary reports of the test results prior to worker exposures to Project activities, periodic surveillance results, and results upon completion of site activities. Provide the Engineer with an original signed copy of each report within 10 calendar days after the end of each month.

3. The Contractor is responsible for retaining all exposure monitoring records for 30 years and employee medical records for the duration of employment plus 30 years.

3.02 ESTABLISHMENT OF REGULATED AREAS

A. Establish zones (regulated areas) around project locations or activities that might generate airborne emissions of lead, cadmium, hexavalent chromium, inorganic arsenic, or other toxic metal in excess of the Action Level (e.g., paint removal and cleanup locations, dust collector staging areas, waste storage areas, etc.).

B. Use ropes, ribbons, tape, warning signs, or other visible means to define the areas. Prohibit entrance into the regulated areas by unprotected or untrained personnel to ensure that they are not exposed to toxic metals from project activities.

C. Unless objective data is available for establishing the regulated areas, and the data is provided in writing, signed by the CIH and is accepted by the Engineer, conduct instrument monitoring in accordance withSSPC-TU7, Method C (Occupational Monitoring of Area Emissions of Hazardous and Toxic Substances), to verify the adequacy of the regulated areas. Use a minimum of two low flow pumps at each regulated area location (e.g., one pump upwind and one pump downwind). Unless otherwise directed by the Engineer, until the monitoring results are available to establish the perimeter of the regulated area, initially establish the boundary a minimum of 15 feet away from any equipment or operations that might generate airborne emissions of toxic metals.

D. Conduct the monitoring according to NIOSH Method 7082, or equivalent method for the other metals of concern, at the pre-established boundaries of the regulated area(s). The Contractor, at their discretion, can decide to perform a total chromium analysis off the cellulose ester filter used to collect samples for inorganic arsenic, cadmium and lead analysis. If the total chromium content is below detectable limits, then a hexavalent chromium analysis will not be required. Collect the samples throughout an entire work shift upon full commencement of the paint removal activities (at project-start-up).

E. If the monitoring confirms that project emissions at the initial boundary do not exceed

the Action Level as an eight-hour TWA, establish the boundary at that location. Unless directed otherwise by the Engineer, all boundaries must be a minimum of 15 feet away from equipment or operations that might generate airborne emissions of toxic metals.

F. If the monitoring shows that the emissions exceed the Action Level, modify and improve work practices and containment to provide better controls over the emissions, or reestablish the boundary at a different location if allowed by the Engineer. Repeat the monitoring in either case.

G. After the boundaries have been established through instrument monitoring, additional monitoring is not required unless directed by the Engineer or environmental consultant if suspect visible emissions occur, or there are changes to the work practices or equipment being used within the regulated areas. In these cases, conduct additional monitoring as directed.

H. Verify that the exposure cassettes are only analyzed by laboratories which meet the qualification requirements established under Appendix A, and which have been approved by the Engineer. The laboratory must provide the results to the Contractor within three days of the field sampling. Provide the test results to the Engineer verbally within one day of receipt, and in writing within five working days thereafter.

I. Post caution signs at the entryways around each regulated area. If there is no regulation for the metal of concern, use the legend for the CAUTION sign as found in 29 CFR 1926.62 as the format, and insert the name(s) of the other toxic metals and their major health effects. Sign requirements for lead, cadmium, and inorganic arsenic are as follows:

DANGER
LEAD WORK AREA
MAY DAMAGE FERTILITY OR THE UNBORN CHILD
CAUSES DAMAGE TO THE CENTRAL NERVOUS SYSTEM
DO NOT EAT, DRINK, OR SMOKE IN THIS AREA

DANGER,
CADMIUM
MAY CAUSE CANCER
CAUSES DAMAGE TO LUNGS AND KIDNEYS
WEAR RESPIRATORY PROTECTION IN THIS AREA
AUTHORIZED PERSONNEL ONLY

DANGER
INORGANIC ARSENIC
MAY CAUSE CANCER
DO NOT EAT, DRINK OR SMOKE
WEAR RESPIRATORY PROTECTION IN THIS AREA
AUTHORIZED PERSONNEL ONLY

DANGER
HEXAVALENT CHROMIUM
CHROMIUM (VI) OR Cr(VI)
CANCER HAZARD
CAN DAMAGE SKIN, EYES, NASAL PASSAGES AND LUNGS
AUTHORIZED PERSONNEL ONLY
RESPIRATORS MAY BE REQUIRED IN THIS AREA

J. Use signs that are a minimum of 8 1/2 inches by 11 inches in size with black block lettering on a white, yellow, or orange background. Do not use caution ribbons as a substitute for signs.

K. Verify that all workers who enter the regulated area have had the proper training, blood analysis and medical examinations, and are wearing the required protective clothing and equipment. Prohibit eating, drinking, smoking, and chewing of food or tobacco products in any area where the exposures exceed the Action Level or where hexavalent chromium may be present.

3.03 CONTROL AND MONITORING OF RELEASES TO AIR, SOIL AND WATER

A. **General**

1. Conduct all activities so that spills or releases to the soil, water, sediment, or sewers do not occur. Comply with all applicable federal, state and local regulations for the protection of soils, groundwater and surface waters.

2. Have the competent person inspect the Work site on a daily basis for compliance with the requirements of this Section and the approved Environmental Protection Plan and prepare a daily report or daily log of observations made. Maintain the information at the project site and make it available to the Engineer or environmental consultant for review at any time.

3. Initiate immediate corrective action, including the replacement of materials or equipment, or adjustments to work activities as necessary, to correct unacceptable emissions or releases. All equipment and vehicles must be repaired or replaced to prevent leaks to the environment.

4. Spill prevention and control measures must be implemented for vehicles and equipment that utilize diesel fuel, gasoline or other petroleum products. Any spills of petroleum products to the environment must be reported to the NYSDEC Spill Hotline: 1-800-457-7362 and the National Response Center: 1-800-424-8802. Any spills to a storm drain, sewer system, wetland, body of water or waterway must be reported to the National Response Center and the Engineer.

5. Provide secondary containment when storing bulk petroleum or chemicals at the project site. Secondary containment shall be large enough to hold the volume of the container being stored within the secondary containment system.

B. **Visible Emissions and Releases**

1. Clean the work area of all visible pre-existing construction material, rubbish, garbage existing paint chips, and paint removal debris (i.e. spent abrasive, rust, paint chips, etc.) prior to installing the containment over any

land mass. Areas to be cleaned include the City's right-of-way and adjacent areas as directed by the Engineer. The presence of new paint chips or surface preparation debris in these areas will be cause to examine the containment and work practices, and to correct all observed deficiencies. Upon completion of the project verify that the same locations and all staging areas are free of construction and paint removal debris.

2. When working over water, install water booms beneath and around the work area as appropriate and/or use boats with skimmers to control and collect unanticipated escapes of debris (see Section 3.04 M).

3. Have the competent person conduct observations of visible emissions and releases on an ongoing daily basis when dust-producing activities are underway, such as paint removal, cleanup, waste handling, and containment dismantling or relocation. Conduct these assessments in accordance with and SSPC-TU7, Method A (Visible Emissions Observations). These assessments are in addition to those performed by the environmental consultant.

4. Visible emissions in excess of SSPC-TU7, Level B are unacceptable. This involves emissions of a cumulative duration of greater than 1 percent of the workday, or greater than 36 seconds in an hour, or 9 seconds in any 15-minute observation period.

5. Releases or spills of dust and debris which have become deposited on surrounding property, structures, equipment or vehicles, and bodies of water are unacceptable. If unacceptable visible emissions or releases are observed, whether by the Contractor, Engineer or the environmental consultant:

   a) Immediately shut down the emission-producing operations and cleanup visible deposits of debris on the unprotected ground, on the soil, in the water, around storm sewers or drains, or in areas where rain water could carry the debris into storm sewers or drains. Pick up debris by hand and by HEPA vacuuming.

   b) Change work practices, modify the containment, or take other appropriate corrective action as needed and as agreed upon by the environmental consultant, to prevent similar releases from occurring in the future.

   c) Do not resume the emission-producing operations until the Engineer or environmental consultant has given permission to resume these operations.

6. In the event of a conflict between the observations of the environmental consultant and the Contractor, the findings of the environmental consultant shall prevail.

7. Maintain written documentation of the results of the observations in a log book or other report form available to the Engineer or environmental consultant for review. Verbally report problems to the Engineer or environmental consultant on the same day they are observed.

C. **High Volume Ambient Air Monitoring**

1. The environmental consultant, on behalf of the Engineer, will utilize the high volume ambient air monitoring equipment provided by the Contractor. The purpose of the consultant monitoring is to confirm that unacceptable TSP-lead emissions are not generated during paint removal, containment cleaning operations, containment dismantling and other emission-producing activities that involve the disturbance of paint and lead-paint debris/wastes/dust. Unless otherwise directed by the Environmental Engineering Unit, a minimum of four TSP high volume air monitors are required for each work area that involves dust creating activities.

2. Do not conduct any work involving the disturbance or cleanup of lead paint debris or move the containment unless the monitors are in place and operating.

3. Position the monitors at the locations and times as designated by the environmental consultant:

   a) Monitor siting will take into consideration the proximity of the work to sensitive receptors, and the general surrounding environment. The locations are likely to change as the work progresses across the bridge.

   b) Review the monitor siting plan proposed by the environmental consultant and confirm that the plan can be maintained per the contract requirements. Notify the Engineer if modifications to the monitoring plan are requested. The modifications shall be approved prior to beginning the applicable dust producing operations.

   c) Move and set up the equipment in the designated locations. Put all monitors into position at the designated locations and ensure that they are fully operational at least 30 minutes before the commencement of dust producing operations in order to allow enough time for the environmental consultant to install filters and make any necessary adjustments to the equipment.

   d) Allow the monitors to remain operational for a minimum of 30 minutes after the completion of daily operations.

4. At the completion of each day's monitoring activities pick-up, transport and store monitors and associated equipment for the next use. If the monitors are to remain in position, provide for the necessary level of security.

5. Initiate the following action based on the TSP-lead results:

   a) The background concentration is established at 0.1µg/m^3.

   b) If TSP-lead levels, measured over 8 hours, are greater than 4.5µg/m^3 minus 2 times the background concentration of 0.1µg/m^3 on one day of dust-producing operations, assess all field operations undertaken on that day and initiate appropriate corrective action.

   c) If TSP-lead levels, measured over 8 hours, are greater than 4.5µg/m^3 minus 2 times the background concentration of 0.1µg/m^3 at the same location on two days of dust-producing operations, suspend all dust-producing operations pending a full assessment

and corrective action.

d) If the results of the monitoring are unacceptable, undertake the necessary corrective action within 24 hours of receipt of the results. Corrective action may include modifications to the paint removal or containment systems and work practices. Do not resume the emission-producing operations until the Engineer or environmental consultant has given permission to resume these operations.

D. **Real Time Particulate Monitoring**

1. The environmental consultant will conduct real time monitoring around the containment (e.g., seams and entryways) each day using a real-time aerosol monitor such as a Data Ram or hand-held Mini Ram. The monitoring is being conducted to evaluate the containment seams and entryways for particulate emissions that represent instantaneous increases over background of three times or more. Background values will be established by taking readings in the same or similar locations while no operations are underway.

2. If unacceptable particulate releases are reported by the environmental consultant, in addition to cleaning the debris, change work practices, modify the containment, or take other appropriate corrective action as needed to prevent similar releases from occurring in the future. Do not resume the emission-producing operations until the Engineer or environmental consultant has given permission to resume these operations.

E. **Sensitive Natural Resources**

1. Sensitive natural resource areas may be located around the project. A sensitive natural resource includes any area capable of providing habitat for plant and animal species or capable of functioning to support environmental systems and maintain the City's environmental balance, such as bays, inlets, and wetlands. These areas also include all federal and state parkland, wetlands, tidal zones or other regulated natural areas. If the project is located in a natural resource area, develop a site-specific habitat protection plan to address the steps that will be taken to protect these ecologically sensitive areas from damage. Note: If Sections 831 and 832 are specified for the work, only a single sensitive natural resources protection plan is required.

F. **Endangered, Threatened, and Protected Species**

1. Peregrine falcons, barn owls, red-tailed hawks, or other birds that are protected by federal and/or state law may be nesting or present on the bridge at the commencement of the Work or may build nests or be present on the bridge as the Work proceeds. (Barn owl and red-tailed hawk nests are generally occupied from the beginning of April until the end of July, with eggs laid in April. Peregrine falcon nests are generally occupied from March to July.) If birds or their nests are present, notify the Engineer about the location of the birds and/or nests and identify the species (if known). Do not disturb the birds or their nests without first obtaining approval from the Engineer of a site-specific plan and all applicable permits and licenses required by state and, if applicable, federal law.

Note: If Sections 831 and 832 are specified for the work, only a single endangered/protected species plan is required.

2. Peregrine falcons are listed as an endangered species under New York State Law, 6 NYCRR § 182.5(a), and they are also protected birds under New York State Law. See N.Y. Environmental Conservation Law §§ 11-0103(5)(b). Barn owls and red-tailed hawks are also protected birds under New York State Law, see id., but they are not endangered or threatened species. None of these species are currently listed as endangered or threatened species under the federal Endangered Species Act.

3. N.Y. Environmental Conservation Law § 11-0505(5) prohibits any person from destroying a nest of a protected bird without a permit from the N.Y. Department of Environmental Conservation. Therefore, prior to destroying a nest of a peregrine falcon, barn owl, red-tailed hawk, or other protected bird, Contractor must obtain a permit.

4. N.Y. Environmental Conservation Law § 11-0535(2) prohibits the "taking" of any endangered species without a license from the N.Y. Department of Environmental Conservation. "Taking" includes "disturbing," among other activities. N.Y. Environmental Conservation Law § 11-0103(13) ("Taking" and "take" include "pursuing, shooting, hunting, killing, capturing, trapping, snaring and netting"). Therefore, prior to taking (including disturbing) a peregrine falcon that may be present on the bridge, Contractor must obtain a license.

3.04 CONTAINMENT SYSTEMS

A. General

1. Use a containment system that maintains the work area free of emissions of dust and debris in accordance with all provisions of this Specification.

2. Install and use a containment system for the project based on the paint removal methods that will be utilized.

3. Provide the containment system in compliance with SSPC Guide 6 guidelines and the requirements of this Specification as well as the FEIS.

4. The containment enclosing the active work area must meet all specification requirements for the entire enclosed area. The entire containment is considered to be the active work area and the specified negative pressure and airflow must be maintained throughout the entire cross-section of the containment enclosure (airflow cannot be directed or channeled within the containment enclosure by the use of barriers, partitions, baffle tarps, or other devices). Containment cannot be divided up into smaller sections with dust and debris being released into adjacent sections that do not have air flow or negative pressure. If the containment is divided into smaller sections, the smaller section must also meet the class of containment as presented in Section 3.04.F.

5. Have the competent person inspect the performance of the containment on a daily basis for compliance with this Section and the approved containment submittals and prepare a daily report or daily log of observations made. Maintain the information at the project site and make it available to the Engineer or environmental consultant for review at any

time.

6. All materials utilized in containment construction shall be fire-retardant. All materials shall possess a fire rating in accordance with all applicable federal, local and state agency, as well as passing U.L and NFPA test standards. With the submittals, provide proof that the materials are fire retardant.

B. **Noise**

1. Comply with the New York City Noise Control Code and Citywide Construction Noise Mitigation requirements.

2. Develop and post on site a Construction Noise Mitigation Plan that defines the steps taken to comply with the standard. Address noise mitigation measures in the plan, including but not limited to:

   a) the use of noise reduction devices on equipment

   b) installation of noise barriers around blast cleaning operations or lining the containment with noise resistant material meeting sound transmission class (STC) 30 or greater per ASTM E90

   c) control of after-hours noise to 80 dBA maximum

   d) noise mitigation training.

3. If construction activities will be performed outside of normal hours of operation (7AM to 6PM on weekdays), obtain special permits authorizing this activity and prepare an Alternative Noise Mitigation Plan for submission to and approval by the NYCDEP. Provide a copy of the permit to the Engineer prior to commencing any operations outside of normal hours.

C. **Containment Drawings and Submittals**

1. Provide containment drawings, calculations, and assumptions, including ventilation criteria as detailed in Appendix A, signed and sealed by a New York State licensed Professional Engineer. Do not conduct any work until the drawings, calculations, and containment submittals have been reviewed and accepted by the Engineer.

2. The containment drawings must include calculations for pressure losses, dust collector capacity, make-up air openings and airflow.

3. Provide catalog cut sheets, fan curves and equipment operating parameters for the dust collectors and filters.

4. Provide design details regarding containments withstanding high winds during storm events when wind speeds are equal to or greater than 40mph.

5. Provide detailed procedure of the steps to be taken should the wind speed exceed the designed maximum wind speed for the containment.

D. **Certification of Containment Installation**

1. After each containment enclosure is installed, have the New York State licensed Professional Engineer responsible for the containment design, or a designee employed by the same firm and working under the direction of the design engineer, conduct a site inspection to verify that the containment system has been assembled as shown on the approved, signed and sealed

drawings. Have the design engineer submit a letter to the Engineer attesting to the above. The Engineer must receive the letter before any paint removal work within the containment can begin.

2. If the containment is not installed in accordance with the design drawings, reinstall the containment, or issue supplemental calculations for the new design for Engineer review and acceptance in accordance with the original submittal requirements. Field changes will only be acceptable after submission and acceptance of supplemental calculations or design drawings.

3. Provide the services of the structural engineer responsible for the design of the containment when requested by the Engineer.

E. **Containment Flooring System and Additional Collectors**

1. If the floor or ground beneath the structure being prepared serves as the base of the containment:

   a) Cover it with air and dust impenetrable materials such as tarpaulins.

   b) Prior to the installation of the containment floor, ensure that the work area has been cleaned of all rubbish, paint chips, garbage and debris and properly disposed. Do not remove any trees, bushes or shrubs.

   c) As required, install a rigid material such as plywood over or under the ground tarpaulin in order to prevent any rips, tears or other penetrations from occurring in the ground tarpaulin. Maintain the materials throughout the project to avoid discharging debris through rips, tears, or breaks in the coverings.

2. If a suspended or elevated platform is constructed to serve as the base of the containment:

   a) Flexible platforms shall not be used over water bodies, vehicular traffic and pedestrian walkways.

   b) Cover rigid platform materials (e.g., plywood, metal, etc.) with multiple layers of flexible materials as necessary to create an air and dust impenetrable enclosure. For platforms over water bodies, vehicular traffic, railroads and pedestrian walkways, the use of at least one (1) layer of continuous rubber type membrane is mandatory.

   c) Cover flexible platform materials, such as those composed of a chain-link wire fencing with multiple layers of flexible materials to create an air and dust impenetrable enclosure. The flexible materials consist of a first layer of rubber-type membrane and a second layer of tarpaulin-type material.

   d) Seal all holes and gaps at cable, hanger, or vertical pick-up intersections with the platform.

   e) Verify that the platform and its components are designed and constructed to support at least four times its maximum intended load without failure plus a safety factor, with wire cables capable of supporting at least six times their maximum intended load without

failure plus a safety factor. Provide all load calculations for design of the suspended platform systems. Strictly follow all applicable OSHA regulations regarding scaffolding and fall protection systems.

f) Provide ground covers around and beneath the containment area to capture inadvertent spills or leaks of debris. Extend the covers a minimum of 10 feet beyond the area covered by the containment. Increase this distance based on the height of the work above the ground as directed by the Engineer. Remove debris from the covers continuously and at the end of a work shift, or as directed by the Engineer.

3. Note the requirements in Section 3.06 C for the daily cleaning of the floor and for overall cleaning of the containment prior to moving or dismantling the enclosure.

F. **Containment Requirements for Removal Methods** – The minimum containment system requirements per SSPC Guide 6 for the various method(s) of paint removal are as follows:

1. Dry Abrasive Blast Cleaning – Class 1A
2. Vacuum Blast Cleaning – Class 4A
3. Wet Abrasive Blast Cleaning – Class 1W
4. Water Jetting – Class 2W
5. Power Tool Cleaning without Vacuum Shrouds – Class 1P
6. Power Tool Cleaning with Vacuum Shrouds – Class 3P
7. Hand Tool Cleaning – Class 3P
8. Chemical Stripping with Hand Removal – Class 3C
9. Chemical Stripping with Wet Removal – Class 2C

G. **Containment and Ventilation System Components** – The basic components that make up containment systems are defined below. The components are combined in Table 1 and in accordance with the requirements of SSPC Guide 6 to establish the requirements for each method of removal.

1. **Rigidity of Containment Materials**: Rigid containment materials consist of single panels, interlocking panels or modular fabrications constructed of plywood, aluminum, rigid metal, plastic, fiberglass, composites, or similar materials. Flexible materials consist of screens, tarps, drapes, plastic sheeting, or similar materials. Containment materials must be fire retardant, and new and unused when delivered to the project site. Maintain stored materials in a new condition until used in containment construction. Containment materials that become torn, ripped, or otherwise damaged during use, or show evidence of wear that may affect their ability to control emissions shall not be used for the construction of containment enclosures or in any other manner on the project.

2. **Permeability of Containment Materials**: The containment materials are identified as air impenetrable if they are impervious to dust or wind such as provided by rigid panels, coated solid tarps, or plastic sheeting. Air

penetrable materials include tightly woven, but not coated, tarps, and materials that are formed or woven to allow airflow, but can retain some airborne particles. Water impermeable materials are those that are capable of containing and controlling water when wet methods of preparation are used. Chemical resistant materials are those resistant to the specific chemical and solvent stripping solutions.

3. **Support Structure**: Rigid support structures consist of scaffolding and framing to which the containment materials are affixed to minimize movement of the containment cocoon. Flexible support structures are comprised of cables, chains, or similar systems to which the containment materials are affixed. Minimal support structures involve the cables or connections necessary to attach the material to the structure being prepared and/or to the ground.

4. **Containment Joints**: Fully sealed joints require that mating surfaces between the containment materials and the structure being prepared are completely sealed. Sealing measures include tape, caulk, stitching, clamps, overlapping seams (when using flexible materials) or other similar material capable of forming a continuous, impenetrable or impermeable seal. Partially sealed joints involve the mating of the materials to one another and to the structure being prepared with concern for the structural soundness of the joint, but without consideration for creating a continuous, impenetrable or impermeable seal.

5. **Entryway**: An airlock entryway involves a minimum of one stage that is fully sealed to the containment and which is maintained under negative pressure using the ventilation system of the containment. Resealable door entryways involve the use of flexible or rigid doors capable of being repeatedly opened and resealed. Sealing methods include the use of zippers, clamps, or similar fasteners. The use of clamps to create “resealable doors” is not permitted. Overlapping door tarpaulin entryways consist of minimum two or three overlapping door tarpaulins. Open seam entryways involve entrance into the containment through any open seam.

6. **Mechanical Ventilation**: The requirement for mechanical ventilation is to ensure that adequate air movement is achieved to reduce worker exposure to toxic metals to as low as feasible, and to enhance visibility. Design the system with proper exhaust ports or plenums, adequately sized ductwork, adequately sized discharge fans and air cleaning devices (dust collectors) and properly sized and distributed make-up air points. A minimum cross-draft airflow of 100 feet per minute (30 meters/min) or a down-draft airflow of 60 feet per minute (18 meters/minute) are required during all activities that disturb lead paint or debris within the containment. These activities include, but are not limited to, abrasive blasting, blow down, waste removal, cleaning of the containment and cleaning of surfaces in the containment. Increase these minimum airflows as required if unacceptable visibility occurs. Verify through instrument monitoring that air flows meet or exceed design values initially and at least weekly thereafter. Number and locations of air velocity measuring points shall be agreed upon with the Environmental Consultant. Document air flow measurements.

Natural ventilation does not require the use of mechanical equipment for moving dust and debris through the work area. It relies on natural air flow patterns, if any, through the containment.

7. **Negative Pressure**: If negative pressure is specified, verify its performance through pressure gage instrument monitoring to achieve a minimum of 0.03 in. (0.08 cm) water column (W.C.) relative to ambient conditions during all activities that disturb lead paint, debris, grit or other lead-contaminated materials. This shall include, but not be limited to, abrasive blasting, containment cleaning, vacuuming, and blowdown within containment. In addition, verify through visual assessments for the concave appearance of the containment enclosure.

8. **Exhaust Ventilation:** When mechanical ventilation systems are used, provide filtration of the exhaust air, otherwise airborne particulate from the containment will be exhausted directly into the surrounding air. Provide a filter that is at least 99.9% efficient in removing a mono-dispersed aerosol at 0.5 micrometers in diameter. For other requirements related to exhaust ventilation design and use requirements, see SSPC-Guide 16 and 3.04.G.6, Mechanical Ventilation and 3.04.G.7, Negative Pressure, described above.

H. **Maintenance of Existing Lighting Systems, Surveillance Cameras, and Containment Lighting Requirements**

1. Maintain as fully operational throughout the project, all existing navigation and anti-collision lighting systems that are attached to the structure. If existing lighting will be concealed, install temporary lighting of equal or better magnitude. Provide the lighting plan to the Engineer for approval in advance.

2. Make all efforts to maintain existing aerial, roadway, and parking lot lighting, or provide suitable substitutions as approved by the Engineer.

3. Do not obstruct surveillance cameras view without prior approval. The Contractor will be responsible for temporary relocation and reinstallation of security cameras as directed by the Engineer.

4. In accordance with SSPC-Guide 12, maintain light intensity inside containment, by natural or artificial means, at a minimum of 20 foot-candles (215 lux) on the surface throughout surface preparation and painting activities. Maintain a minimum of 50 foot-candles (538 lux) at the surface for inspection activities. Provide auxiliary lighting as necessary. Use explosion-proof lighting.

5. Increase lighting intensity when measurements by any involved party indicate that there is insufficient lighting for either surface preparation, painting, or inspection.

I. **Lockout/Tagout of Existing Electrical Systems**

1. Develop, implement and maintain a Lockout/Tagout plan.

2. De-energize and lockout/tagout existing electrical systems located inside containment enclosures and in other work areas as appropriate.

3. Perform all lockout/tagout in accordance with 29 CFR 1910.147 and

1910.333.

4. Coordinate all lockout/tagout activities with the Engineer and the utilities.

5. Include lockout/tagout in the worker protection plan. If Sections 831 and 832 are specified for the work, only a single Lockout/Tagout plan is required.

J. **Fire Protection and Prevention, and Emergency Response**

1. Coordinate all lockout/tagout activities with the Engineer and the utilities.

2. Develop, implement, and maintain a site-specific Fire Protection and Prevention Plan meeting at a minimum the requirements of 29 CFR 1926.24 and 29 CFR 1926.150.

3. Control all sources of ignition throughout the period of construction and comply at a minimum with the requirements of 29 CFR 1926.151.

4. Store and handle all flammable and combustible in a safe manner and in compliance with the requirements of 29 CFR 1926.152 at a minimum.

5. Develop, implement and maintain a site-specific Emergency Response Plan in accordance with the requirements of 29 CFR 1926.65(q) at a minimum.

6. If Sections 831 and 832 are specified for the work, only a single Fire Protection/Prevention and Emergency Response plan is required

K. **Electrical Safety**

1. Develop, implement and maintain a written site-specific Electrical Safety plan ensuring control of electrical hazards due to installations, safety-related work practices, maintenance and environmental considerations, and/or use of special equipment as outlined in 29 CFR 1926.400 and 29 CFR 1926.403.

2. Implement all applicable provisions of 29 CFR 1926 Subpart K as necessary based upon the hazards present on the jobsite.

3. If Sections 831 and 832 are specified for the work, only a single Electrical Safety plan is required.

4. Provide training, hazard assessment and proper personal protective equipment if workers are going to come into contact with high voltage power when working on the City site as specified in NFPA 70E regarding arc flashing.

L. **Protection of Drainage Systems**

1. Protect storm sewers and drains from the entrance of debris from project activities. Keep all drainage systems clean and operational throughout the entire project. At the end of each shift, remove all visible debris from the protective devices or from areas where rain water could carry the debris into drains or storm sewers. Conduct more frequent cleaning as directed by the Engineer.

2. Identify the methods that will be used to route run-off from the existing deck drains through the containment enclosure. Do not close any bridge deck drains without the explicit approval of the Engineer.

M. **Work Over/On Water - Containment Restrictions**

1. When working over or near water, install a shield, suspended platform or other engineering control meeting the requirements of Section 3.04.E.2 to prevent discharge of any debris or materials into the waterway. Use water booms to contain inadvertent spills or releases of dust and debris unless prohibited by navigation lanes or ineffective due to high water flow. In these cases, have a boat available with a skimmer to collect fugitive materials. Remove all project-related dust and debris from the surface of the water or from sediment at the end of each shift at a minimum. Conduct more frequent cleaning, if directed by the Engineer.

2. Provide the Engineer and the appropriate authorities (e.g., Coast Guard) with the distance that the containment will extend below the bottom of the bridge (e.g., below the bottom chord) when operating in the navigation channel. Clearance reduction shall be approved by Coast Guard.

3. Unless otherwise directed by the Engineer or the appropriate authorities, design the containment to allow it to be moved out of the navigation channel within 24 hours of notification that ships needing additional clearance require passage.

4. Provide the Engineer and the appropriate authorities with a 24-hour telephone number and contacts for discussions regarding the containment system.

N. **Inclement Weather**

1. When threatening weather conditions exist or are forecast for the New York City Metropolitan Area, such as sustained winds of 30 mph (48 kilometers/hour) or gusts of 40 mph (64 kilometers/hour) that could cause the release of waste material to the surrounding environment, stop all work activities and immediately cleanup waste materials within the containment. The work area and project site must be secured of all loose materials and equipment.

2. Develop and submit to the Engineer for acceptance, an Emergency Demobilization Procedure for the securing of equipment and materials, and the removal of necessary containment materials in the event of, or the forecast of, inclement weather for the New York City Metropolitan Area. Inclement weather includes, but is not limited to, sustained wind speeds of 40 mph (64 kilometers/hour), gusts greater than 40 mph (64 kilometers/hour), wind speeds greater than the containment design (if less than 40 mph (64 kilometers/hour)) and heavy snow/ice storms that will place unacceptable loads on the containment structure. Initiate the Emergency Demobilization Procedure under, or the forecast of, inclement weather conditions or as directed by the Engineer. Note that if the containment design mandates Emergency Demobilization at wind speeds less than the above, initiate demobilization at the lower speeds. The Contractor is responsible for maintaining containment integrity even if predicted adverse weather events occur during off hours, weekends and/or holidays.

3.05 WASTE CLASSIFICATION, HANDLING, AND DISPOSAL

A. General

1. The Contractor and the City are co-generators of the hazardous waste. The Engineer will provide the EPA identification number, but the Contractor is solely responsible for the aspects of waste management as defined in this Section.

2. Work under this Section consists of accumulating, packaging, labeling, loading, transporting, treating, and disposing of hazardous paint removal waste, hazardous wastes, hazardous and non-hazardous soils, solvents, liquid wastes, non-hazardous construction debris, and waste water used for cleaning and washing the bridge, decontamination of personnel and equipment prior to removal from the Work site.

3. For purposes of this Section, paint removal waste is defined as removed paint particles, rust and other foreign matter combined with the material used to remove the paint. This also includes used abrasive grit material, recyclable or otherwise. The City has declared all paint removal waste as hazardous, even if sampling and analysis indicate that hazardous thresholds are not exceeded. Note that the existing coatings may contain toxic metals in addition to lead.

4. Recover all waste products generated during cleaning and painting work, including but not limited to rags, tape, and paint cans. Manage as non-hazardous /construction waste as described in 3.05 H.2 unless the items are contaminated with paint, thinners and petroleum products, or if paint cans contain more than one inch of material. If the items are contaminated with paint, thinners and petroleum products, or contain more than one inch of material, handle them as a flammable hazardous waste.

5. The competent person shall inspect the waste handling and storage areas on a daily basis for compliance with this Section and the approved Waste Management Plan and prepare a daily report or daily log of observations made. Maintain the information at the project site and make it available to the Engineer or environmental consultant for review at any time.

B. Items Provided by the Contractor

1. Waste sampling, testing, and classification.

2. Waste packaging, handling, and secure storage.

3. Labeling of containers.

4. Procuring all necessary waste permits and licenses.

5. Arranging for the transportation and disposal of hazardous waste.

6. Arranging for the transportation and disposal of non-hazardous waste.

C. Waste Sampling

1. All paint removal waste streams are declared hazardous but collect a minimum of four representative samples of each paint removal waste stream to identify the specific composition.

2. Collect a minimum of $^1/_2$ pound of waste per sample, or approximately 8 oz

per sample in the case of wastewater. Collect the wastewater sample only after the water has been filtered as specified later in this Section.

3. Collect the samples under the observation of the environmental consultant.

4. Collect the samples in accordance with EPA solid waste test methods SW-846, "Test Methods for Evaluating Solid Waste - Physical/Chemical Methods." Use a random sampling technique to collect representative samples. Obtain samples as close to the point of generation as possible, i.e., from the floor of containment, except that debris from blasting with recyclable abrasives shall be taken from the abrasive recycling equipment.

5. Complete the initial sampling of each waste stream prior to, or immediately upon filling the first container, but do not allow waste to accumulate for longer than 30 days before sampling. After the representative samples are collected, send them immediately to the approved and NYS accredited laboratory for analysis.

6. Unless otherwise directed by the Engineer or required by State regulations or the waste recycling or disposal facility, once each waste stream is sampled, tested, and classified, additional sampling and analysis are not required for subsequent shipments unless the waste stream changes.

D. **Waste Testing**

1. Only use laboratories which meet the qualification requirements of Appendix A, and which have been approved by the Engineer.

2. Direct the laboratory to test the solid waste in accordance with 40 CFR 261, Appendix II, Method 1311 Toxicity Characteristic Leaching Procedure (TCLP).

3. Analyze one sample from each waste stream by TCLP for all eight (8) RCRA metals, and other hazardous characteristics (e.g., corrosivity, reactivity, toxicity, and ignitability) as required by the regulations. Conduct any additional tests required by the disposal facility. When chemical strippers are used, test all liquids and sludge. Include pH to determine corrosivity. Test chemical waste products for ignitability and corrosivity.

4. Retain the other samples for possible further analysis.

5. After filtration, test the wastewater for lead and any other analytical parameters required for disposal characterization by the POTW, discharge permit or disposal facility. Comply with disposal requirements in 3.05.H.4.

E. **Waste Classification**

1. **Hazardous Waste Classification**

a) All paint removal waste streams are classified as hazardous. Other waste streams are classified as hazardous if results from TCLP analysis indicate any one of the following eight metals in concentrations at or above limits established in 40 CFR 261:

Arsenic -	5.0 mg/L
Barium -	100.0 mg/L
Cadmium -	1.0 mg/L
Chromium -	5.0 mg/L

Lead - 5.0 mg/L
Mercury - 0.2 mg/L
Selenium - 1.0 mg/L
Silver - 5.0 mg/L

b) The above list includes only those elements typically associated with paints. Take into account and test for other substances that may be present which can cause debris to be classified as hazardous waste as defined in 40 CFR 261 (e.g., pH □2.0 or □12.5 resulting in corrosivity, or the characteristics of reactivity or ignitability).

c) The City requires that paint removal waste, including waste that is generated through the use of steel abrasives and used steel abrasives, be handled, transported, and disposed of as hazardous waste, regardless of the TCLP test results.

d) Typical paint removal waste contains less than 2% by weight of organic material. The Contractor is specifically forewarned that disposal facilities perform spot tests and may refuse to accept wastes in excess of 2% organic content. Waste contaminated in this manner (e.g., with solvent waste) will be the Contractor's responsibility. All penalties and costs associated with the refusal of a disposal facility to accept waste not meeting its requirements will be borne by the Contractor.

e) Ensure that all waste characterization testing required by the disposal facility is included in waste classification sampling and testing. The Contractor shall classify waste via any additional sampling and testing required by the selected disposal facility.

2. **Non-Hazardous Waste Classification**

a) A waste stream is classified as non-hazardous if the TCLP analysis indicates that the waste stream contains toxic metals or hazardous substances below the thresholds identified above which would classify it as hazardous, and it does not exhibit other characteristics of hazardous wastes.

b) The City has classified paint removal waste as hazardous regardless of the test results.

3. **Laboratory Report**

a) Have the laboratory send the original test report directly to the Engineer no later than five (5) calendar days after the representative samples are submitted for testing, with a copy being sent by facsimile or email to the Engineer on the same day the original report is sent.

b) Include the following minimum information in each report: Identity of the waste stream(s) analyzed, the number of samples collected and tested, dates of sampling and testing, laboratory test procedures utilized, the names and signatures of the individuals collecting the samples and conducting the laboratory tests, an interpretation of the test results, and chain-of-custody forms.

F. **Waste Handling, Site Transportation and Spill Containment**

1. Comply with 40 CFR 262, State and City regulations for the on-site handling, packaging, and storage of all waste generated by the project.

2. Sequence the waste collection operations and identify storage locations in order to minimize the amount of container movement required throughout the course of the project. The Engineer must approve all waste storage locations. All hazardous waste must be stored on City property.

3. Provide secure waste storage areas (e.g., within a separate locked fenced-in area or other secure enclosure) to prevent access by the public or vandals and placard the storage area in accordance with applicable regulations. Store the waste on a level surface. Any fencing used for the storage area must be a minimum of eight feet high. All hazardous waste storage areas must be in compliance with the RCRA Contingency Plan as prepared by the contractor.

4. Do not place hazardous waste on the unprotected ground (e.g., cover the ground with impermeable tarpaulins). Provide protection from the elements (e.g., rain and snow) and adequate shielding to prevent dispersion of the waste by wind or rain. Use pallets to keep the hazardous waste drums off of the ground. Store drums containing liquid wastes (e.g., wastewater and spent solvents) on drip pads. Clean the drip pads on a periodic basis, as necessary. Install secondary containment controls around all hazardous waste containers.

5. Store non-hazardous waste separately from hazardous waste. Do not co-mix hazardous waste with non-hazardous waste. Do not mix different types of hazardous waste together unless specifically approved by the Engineer and the disposal facility.

6. Arrange containers in the storage area for easy accessibility. Drums should be stored in rows of two with hazardous waste labels facing outward for inspection. Do not pile drums over two high.

7. At the end of each working day at a minimum, collect and store the waste in drums or containers such that no waste is left exposed overnight. Cover all containers immediately upon filling and confirm that all lids are closed except when filling. Verify that all labels remain intact. Hazardous waste must be transported from the points of generation to the secure storage area within a closed vehicle (i.e. box truck). Transportation of hazardous waste via fork-lift, pick-up truck, flat bed or other similar type vehicles is not permitted. Hazardous waste can only be transported on the project site and not to an off-site storage area or staging yard. Hazardous waste can only be transported through New York City streets by a properly NYSDEC licensed and permitted waste transporter to the TSDF in accordance with applicable regulations.

8. Maintain all containers in good operating condition with all lids and closing mechanisms intact and operational to prevent the escape of debris by wind, spilling of the contents, or access by unauthorized personnel. Drums must have lids and rings in place. Drums stationed at the dust collectors, recyclers or other equipment must have drum lids in place and connected to the discharge nozzles of the equipment through the flanged opening on

the drum lid. All hazardous waste and debris from paint removal operations must be stored in rigid containers. The use of fabric or plastic-type bags to collect hazardous waste, non-characterized waste or other regulated waste is prohibited. The connecting of fabric or plastic bags to discharge nozzles of equipment is prohibited.

9. Provide adequate shielding and protection of the surrounding area when transferring and/or conveying hazardous waste from one container to another to prevent dispersion or spills. Hazardous waste can only be transferred within a regulated, controlled and contained area. Immediately cleanup spilled debris and return it to the storage containers. Use methods such as HEPA vacuuming that will prevent airborne dispersion of the material. Revise labels as necessary at the time of transferring and/or conveying hazardous waste from one container to another.

10. Do not fill any container or roll-off in excess of the capacity marked on the container.

11. Have the competent person, on a daily basis, inspect the drums or containers for corrosion, applicable and legible labels, proper covers, ground protection, and leaks, and record the results of all the inspections in a log book. Conduct additional inspections before containers are moved.

12. Verify that all waste is transported to the appropriate recycling or disposal facility within forty-five (45) calendar days after waste is generated, or two weeks following demobilization of the site, whichever occurs first. Failure to comply with the aforementioned deadlines may result in the actions described under Basis of Payment.

13. Improper waste storage is cause for immediate suspension of the Work by the Engineer until appropriate corrective action is completed.

14. Train all personnel in the proper handling of hazardous waste at the Work site in accordance with 40 CFR 265.16 and 6 NYCRR 373. Include procedures in the Waste Handling Plan that will be followed in the event of a release or spill when handling the waste, including containment of the spill, notification of the Engineer, collection and containerizing of the waste, and a review of work practices and implementation of necessary changes to prevent a reoccurrence. Maintain all training records on-site. Workers responsible for handling hazardous wastes must have a current OSHA 24-hour HAZWOPER certification plus 8 hours of annual refresher training.

G. **Labeling of Containers**

1. Immediately label all containers of hazardous waste in accordance with 40 CFR 262, and 49 CFR 171-179. Complete missing information upon receipt of the testing results. Include the following minimum information:

   a) Hazardous Waste. Federal law prohibits improper disposal. If found, contact the nearest police, or public safety authority, or the U.S. Environmental Protection Agency.

   b) Proper DOT Shipping Name (e.g., RQ Hazardous Waste Solid, N.O.S. 9, NA 3077, PG III)

   c) Manifest Document No (when manifest is prepared; prior to shipping)

d) Generator Name, Address, EPA ID No, and Contract No. ‘

e) Date of Accumulation (accumulation date commences when hazardous waste is first placed into the container)

f) EPA Waste No (e.g., Arsenic - D0004, Cadmium - D0006, Chromium - D0007, Lead - D008)

g) Apply DOT identification labels based on DOT hazard class in accordance with 49 CFR 172.

2. Enter the above information using permanent marking material, printed in English, and displayed on a background of contrasting color unobscured by other labels or attachments. Locate labeling away from other markings that could substantially reduce its effectiveness.

3. Complete the labeling, marking, and placarding activities under the observation of the environmental consultant prior to storing or transporting any container or roll-off.

H. **Waste Transportation and Disposal**

1. **Hazardous Waste**

a) Procure all necessary waste permits or licenses that are required by State or City regulations.

b) Prepare the Uniform Hazardous Waste Manifest for each shipment, including the LDR (Land Disposal Restriction) certification, which will be attached to the manifest. The Generator Owner shall be NYCDDC OEGS Unit. The Engineer will sign the Generator’s Certification on the manifest and maintain copies of the original manifest and signed copies upon completion of disposal. All original manifests must be submitted to the Engineer.

c) Arrange for the transportation of all hazardous waste by a licensed transporter in accordance with 40 CFR 263, 49 CFR 171-179, and State and City regulations. Verify that all waste is completely covered before departing project site.

d) The hazardous waste transporter is not permitted to stop enroute after the pick-up of hazardous materials from the construction site.

e) Arrange for the recycling or disposal of all hazardous waste in accordance with 40 CFR 264, 40 CFR 268, and state regulations. Verify that only licensed recycling or Treatment, Storage, and Disposal (TSD) facilities are used.

f) Should any problems arise that would preclude the selected facility from accepting the waste, immediately notify the Engineer in writing of such situation. Identify and provide information on an alternate TSD that is properly licensed and acceptable to the Engineer and arrange for disposal at such facility after having obtained written approval from the Engineer.

g) Provide a certification for each manifested shipment that the waste was accepted by the recycling or disposal facility, and properly treated and disposed. Comply with all of the manifesting,

certification, and reporting requirements for hazardous waste in accordance with 40 CFR 262, 40 CFR 268 and State regulations, including certificates of final disposal for each shipment.

h) If the signed manifest is not received from the disposal facility within thirty-five (35) days, initiate tracking by contacting the transporter and TSD to determine the status of the shipment. If the signed manifest is not received from the disposal facility within forty-five (45) days of shipment, as directed by the Engineer, initiate the EPA Exception Report in accordance with 40 CFR 262.42, and take all steps necessary to locate the manifest and waste.

2. **Non-Hazardous Municipal/Construction Waste**

a) Procure all necessary waste permits or licenses that are required by State or City regulations.

b) Properly transport and dispose of all non-hazardous municipal/construction waste.

c) Verify that waste is completely covered before departing the project site.

d) If toxic metals or hazardous substances were detected during the laboratory testing, notify the disposal facility that such metals or materials are present in the waste.

e) Lead coated scrap steel shipped off site for recycling must be properly wrapped and protected during transport to prevent paint chips discharging from the truck into the environment. Provide a letter from the recycling facility acknowledging the receipt of lead coated steel from the specific City project site, and that they do accept lead-painted steel for recycling.

f) Non-hazardous, lead-containing soil can either be disposed at an appropriately permitted waste landfill or soil recycler depending upon the disposal facility requirements for acceptance.

3. **Special Waste Requirements for Recycled Steel Grit**

□□ When recycled steel abrasives are used, collect, handle, store, and transport the recycled steel abrasives as hazardous waste. All waste generated from the recycled steel abrasives, including used recyclable steel abrasives, must also be treated as hazardous waste. Do not transport used abrasive materials from/to other project sites unless approved by the Engineer.

□□ Manage the hazardous waste as per 3.05 F, G, and H.

4. **Waste Water Handling and Disposal**

a) Collect, test and dispose all waste water used for the bridge cleaning, clean up activities, hygiene purposes and laundering of clothing if done on site in accordance with Federal, State and Local regulations. Note that payment for the hygiene and laundering water is included under decontamination facilities for worker protection.

b) Filter visible paint chips and particulate from the water prior to placing it into the containers. Prior to disposal, test the water for total toxic metals and provide ample filtration (e.g., through a multi-stage filtration system ending in 5 microns or better if needed) until the water is not classified as hazardous. If the filtered waste water does not meet the requirements for nonhazardous waste classification, handle and dispose of it as a hazardous waste in accordance with Federal, State and Local regulations.

c) Make disposal arrangements with the local publicly owned treatment works (POTW), Sanitation Company, or other appropriate permitted facility. Provide the Engineer with documentation signed by an official of the facility stating that the facility will accept the waste, and that the levels of any lead or other metals remaining in the water are acceptable. If the facility allows the filtered water to be placed into the sanitary sewer system, include such authorization in the letter. Provide a copy of the NYCDEP Discharge Permit for any discharge into the NYC sewer system. Waste water discharged to the New York City sewer system must be below the discharge standards established by the NYCDEP.

3.06 CLEANING AND CLEARANCE OF MATERIALS, EQUIPMENT, AND SURROUNDING SURFACES

A. General

1. Have the competent person inspect the Work site on a daily basis for compliance with the requirements of this Section and the approved Environmental Protection Plan and prepare a daily report or daily log of observations made. Maintain the information at the project site and make it available to the Engineer or environmental consultant for review at any time.

B. Daily Cleaning of Work Site

1. Cleanup paint chips, dust, materials, staining from steel abrasives and paint removal debris from the unprotected ground, the soil, on or in the water or sediment, from surfaces of all equipment, around storm sewers or drains, or in areas where rain water could carry the debris into storm sewers or drains. When cleaning pavement surfaces take special care to remove all waste material so as to prevent it from being redistributed into the air by traffic.

2. Cleanup the debris at least once each shift or more frequently if directed by the Engineer or environmental consultant. Note that the cleanup of loose debris by the end of the work shift is mandatory.

3. Conduct the cleaning by manually removing paint chips, washing and wiping, and/or HEPA vacuuming. Sweeping of paint chips, lead paint removal debris, dust is not permitted.

4. Have the competent person document the results of the daily cleaning in a report or log.

C. **Cleaning of Containment**

1. When abrasive blast cleaning is employed, remove abrasive/paint debris from the containment floor in order to prevent waste build up. Acceptable methods include the use of automatic waste conveyance systems or HEPA vacuums. If such ongoing methods of removal are not employed, conduct waste removal at a minimum of every two hours, or continuously, while abrasive blast cleaning is underway, to remove accumulations of waste, or as directed by the Engineer. Remove all abrasive/paint waste at the end of each shift, or before a prolonged work stoppage, such as for weather interruptions, or as directed by the Engineer.

2. When methods of paint removal other than abrasive blast cleaning are employed, conduct cleaning of the waste from within containment at the end of each shift, or before a prolonged work stoppage, such as for weather interruptions, or as directed by the Engineer.

3. Prior to moving the containment enclosure, clean the inside surfaces of the enclosure (walls, floors, ceiling, etc.) of dust and other spent material by vacuuming. The competent person shall conduct a visual inspection to verify that the surfaces are free of loose debris, dust, paint removal waste, grit, etc. prior to moving and document the results in the daily log or report. All scaffolding, platforms, floor sheathing must be inspected for cleanness prior to dismantling of containment tarps. Mechanical air ventilation must be maintained during all cleaning operations and must remain operational until the tarps are dismantled from the containments.

4. Prior to dismantling the containment, clean the inside surfaces to the extent that dust or debris is not dislodged when wiping a cloth across the surface. The competent person shall conduct the inspection and document the results in the daily log or report. Do not dismantle the containment closure until the Engineer has accepted the quality of cleaning.

D. **Cleaning of Contractor Equipment and Materials**

1. Prior to removing equipment or reusable materials from the project site, remove all loose dust and debris from the surfaces to the satisfaction of the Engineer or environmental consultant.

2. Conduct the cleaning by manually removing paint chips, washing and wiping, and/or HEPA vacuuming.

3. Ductwork – Remove all accumulation of loosely held dust or debris from ductwork exterior by thoroughly vacuuming (using wet- or dry-powered HEPA vacuums), followed by wet washing as necessary. Clean the interior surface of ductwork using a low-pressure wash or air in conjunction with a system designed to capture dust washings, waste water and debris. After all visible, loose dust has been removed from inside the ductwork, seal the ends of each segment of duct using a minimum of double-wrapped, 6-mil polyethylene sheeting. Prior to transporting off site, the ductwork should be labeled “LEAD-CONTAMINATED.”

4. The competent person shall conduct clearance tests by wiping a cloth across representative surfaces. If dust or debris is dislodged, conduct additional cleaning until the surfaces pass the clearance test. Report the

results of the testing in the daily report or log.

5. The engineer, environmental consultant or authorized representative may collect and analyze wipe samples from equipment to confirm effectiveness of cleaning. An acceptance criterion of <400 µg/SF will be used.

6. All dust collectors and recycling units must have all filters removed and disposed of as hazardous waste during the project as necessary and prior to equipment leaving the project site.

E. **Final Cleaning/Clearance of Surrounding Property and Structures**

1. After all Contractor equipment and materials have been removed, conduct a visual inspection and cleanup of the project site and surrounding property. This includes all areas used by the Contractor (e.g., staging and equipment yards, shower and trailer areas, waste storage, etc.), and all surrounding property, structures, buildings, equipment, and surfaces located within 100 feet in each direction from the outermost face of the bridge structure. If project debris is observed to be present beyond 100 feet from the structure, expand the limits of the inspection and cleanup, as directed by the Engineer.

2. Test the surface layer of bare soil in publicly accessible areas for total lead concentrations. Test any applicable locations that were within the regulated area(s) established for the project and extending 100 feet in any direction from the regulated areas for projects involving abrasive blasting. If the concentration of total lead exceeds 400 ppm, remove the top two inches (not including vegetation) of topsoil and replace with clean soil and/or sod. Background soil samples are not required for comparison. Test the removed soil per Section 3.05.D to determine proper disposal.

3. Remove all lead dust, spent abrasives or other paint removal media, paint chips, solvents, materials of construction, fuel, and other litter from the areas indicated in item 3.06 E.1. Cleanup and remove the debris to the satisfaction of the Engineer or environmental consultant. This includes all visible debris and waste associated with bridge painting activities, even if the paint chips and abrasive waste are a pre-existing condition.

4. Clean the surrounding ground, equipment and other surfaces by manually removing paint chips, wet washing and wiping, and/or HEPA-vacuuming. Sweeping is not permitted. The environmental consultant will be conducting visual cleanliness inspections and wiping a cloth across surfaces to verify that dust has been removed. Wipe sampling may also be performed. Surfaces should have less than 400 µg of lead/SF. Conduct additional cleaning as required, based on the results of these inspections.

5. Clean the surrounding water with the use of approved materials and equipment including but not limited to water booms and/or boats with skimmers, as directed by the Engineer.

6. Properly collect, handle, store, transport and dispose of all material and/or water along with all waste products generated during the Work including but not limited to rags, tape, disposable coveralls, and filters.

7. Prepare a written report presenting the results of the inspections and tests conducted to verify the final cleanliness of the project site, surrounding

property, waterways, equipment, buildings, and structures.

3.07 DEMOLITION

A. **General**

1. Demolition and work involving painted metal such as steel, wrought iron and cast iron, is to conform to the requirements of this section. This includes 3.01 – WORKER PROTECTION, 3.02 – ESTABLISHMENT OF REGULATED AREAS, 3.03 – CONTROL AND MONITORING OF RELEASES TO AIR, SOIL AND WATER, 3.04 - CONTAINMENT, 3.05 – WASTE CLASSIFICATION, HANDLING AND DISPOSAL, and 3.06 – CLEANING AND CLEARANCE OF MATERIALS, EQUIPMENT, AND SURROUNDING SURFACES, and as modified by this section.

2. Assume the coating on the metal contains hazardous metal(s) unless otherwise determined by testing. Certify in writing to the Engineer the results of all testing. Provide proof that the coated steel removed from the project was not reused or buried but was sent to a scrap metal recycling facility or properly disposed.

3. This section is intended only for the demolition and preparation prior to repair. It does not include provisions for recoating of the steel.

B. **Cleaning/Removal**

1. Flame Cutting or Burning

a) Prior to the start of work, all surfaces that are to be welded, heated, or burned are to be cleaned to removal all contaminants and/or hazardous materials which can be discharged to the environment as a function of subsequent operations.

b) The paint is to be removed in its entirety extending a minimum of six inches (15 cm) on both sides of the cut line. Paint is to be removed from all surfaces in the cut area, including the back surface of the member being cut.

c) Furnish and erect temporary lighting to illuminate the surfaces being cleaned at a minimum illumination of 30 foot-candles to aid in cleaning operations and inspection if ambient light is insufficient.

d) Allowable coating removal methods include chemical stripping, power tool cleaning, water jetting, and abrasive blasting. Containment levels as presented in 3.04.F to match the method of removal are to be used.

2. Saw Cutting, Rivet Busting and Bolt Removal

a) Saw cutting is limited to small areas such as when removing handrails, fence posts, pipes less than 6 inches (15 cm) in diameter, and similar items. Saw cutting shall not be used for cutting of large steel members or other large steel items such as decks, diaphragms or other similar items. Either remove the coating prior to saw cutting, or firmly attach duct tape to the surface extending a distance 4 inches (10 cm) to both sides of the saw line. If water is used during saw cutting to cool down cutting blades all water must be collected and properly disposed of after waste characterization testing and

analysis. The tape shall also be collected and disposed of properly.

b) Coating removal is not required for rivet busting or bolt removal. However, if the coating is not removed, the surfaces must be coated with an encapsulant specifically manufactured for use on lead-based paint. All debris from rivet busting shall be cleaned with a HEPA vacuum. Ensure ground protection or a work platform is in place during rivet busting activities.

c) Do not use any method that will cause dust to be emitted into the environment to an extent that would expose the worker above the Action Level for any hazardous metal that is present.

d) Containment is to consist of ground cover, catch basin, catch tarp or the like to contain paint chips, debris and water (if used). Submit the containment plan for approval by the Engineer.

C. **Worker Protection**

1. When flame cutting or burning is performed, conduct worker exposure assessment in accordance with Section 3.01.D both for the coating removal step and when flame cutting or burning is performed.

2. Perform worker exposure assessment in accordance with Section 3.01.D when saw cutting, rivet busting and bolt removal.

D. **Regulated Areas**

1. Establish regulated areas through instrument monitoring as required by Section 3.02. When flame cutting or burning, the instrumental monitoring is to be performed for both the coating removal step and cutting step.

E. **Environmental Control and Monitoring of Releases to Air, Soil, and Water**

1. Follow the requirements in Section 3.03. Ambient air monitoring is not required when chemical stripping is performed.

F. **On-Site Handling and Waste Disposal**

1. Do not store painted metal components on the ground without protection. Either cover the ground or place in lined containers. Small items such as bolts, rivets and small pieces of steel can be placed in drums.

2. Either wrap metal components painted with hazardous materials in 6-mil thick plastic sheeting or place in lined containers for transport.

3. Provide the Engineer with a letter from the recycling facility as required in Section 3.05.H.2.e).

3.08 METHOD OF MEASUREMENT

A. **Worker Protection Plan** – The work of developing and implementing the Worker Protection Plan will be measured on a lump sum basis. This includes all medical testing and exposure monitoring sample analysis, and the furnishing, installation, maintenance, relocation, and removal of decontamination facilities. Included in the price is the cost of testing, storing, and disposing all hygiene water.

B. **Environmental Protection and Project Cleanup** – The work to develop and implement the environmental protection plans; supply and maintain the TSP-lead monitors; conduct visible emissions evaluations; and conduct routine and final

project inspections and cleanup will be measured on a lump sum basis.

C. **Containment System** – The work to design the containment/ventilation system, prepare all working drawings and submittals, and provide all labor, materials and equipment necessary to install, operate, and remove the containment systems will be measured on a lump sum basis. On single projects where different types of containment are being used (e.g., unique designs for girder spans versus through truss, or one design for power tool work versus blast cleaning), the Contractor may elect to provide a separate lump sum price for each type of containment system being employed.

D. **Treatment and Disposal of Hazardous Waste, Solvents, Soils, Paint Removal Waste, and Waste Water**

1. This work will be measured on a lump sum basis to include all paint removal waste, hazardous waste, solvents, soils, and waste water (with the exception of hygiene water which is included in item 832 under decontamination facilities in “Worker Protection Plan”) accumulated, packaged, stored, transported, treated, and disposed in accordance with the requirements of this Section.

2. The accumulation, packaging, storage, transportation, and disposal of non-hazardous waste (e.g., construction debris) is addressed in this specification, but it is not measured for payment. The cost for the handling and disposal of this waste is considered to be incidental.

E. **Community Notification** – The work to develop and distribute pamphlets and participate in community meetings will be measured on a lump sum basis.

F. **Demolition Cleaning** – The work to perform demolition cleaning will be measured on a lump sum basis.

3.09 BASIS OF PAYMENT

A. **Worker Protection Plan**

1. The lump sum price bid shall include labor costs for the IH and the competent person, and the cost of all materials, personal protective equipment, respirators, other equipment, and fees necessary to complete the Work, including lockout/tagout, fire prevention and protection, electrical safety, etc.

2. All costs related to personal exposure monitoring and medical surveillance, including worker time and transportation for medical testing, the cost of providing results to employees and the Engineer, and the cost for collection of exposure monitoring samples, shall be included in the lump sum price. No payments shall be made for additional medical tests or laboratory analysis required due to an increase in the blood lead level of any employee(s) above the OSHA threshold of 40 µg/dl.

3. The lump sum price shall also include the cost of ground rental and utility as necessary to furnish and install (clean, maintain, relocate and remove) the decontamination facilities as necessary to complete the Work. Cost of handling, testing and disposal of hygiene water also included in the Lump sum price.

4. Progress payments for the development and installation of the Worker

Protection Plan will be computed in accordance with the following schedule:

a) 15% of the lump sum price will be paid when work entailing a potential for lead exposure has begun, the work is in compliance with the Worker Protection Plan as determined by the Engineer, and the following items (if required) have been completed:

(1) Lead Health and Safety plan is submitted, reviewed and accepted by the Engineer.
(2) Certification of completion of lead training for supervisors and employees is provided to the Engineer.
(3) Certification of completion of respirator training and documentation of respirator fit testing for all employees who will wear respirators is provided to the Engineer.
(4) Documentation of purchase or mobilization of all required respirators and Personal Protective Equipment (PPE) is provided to the Engineer.
(5) Documentation of purchase or mobilization of decontamination facilities is provided to the Engineer.
(6) Documentation of initial medical testing and a summary of the results is provided to employees and the Engineer.
(7) Documentation of initial exposure monitoring and a summary of the results are provided to employees and the Engineer.
(8) Warning signs are posted in exposure areas.

b) 75% of the lump sum price will be paid based on the percentage of the work completed.

c) 10% of the lump sum price will be paid when the exit medical exams have been offered as required and results provided to employees and the Engineer, the final monthly report has been received, all work which entails a potential for lead exposure has been demobilized, and all equipment associated with such operations has been removed from the project site.

C. **Environmental Protection and Project Cleanup**

1. The lump sum price bid shall include the cost for developing and implementing the environmental protection plans; supplying, setting up and maintaining the TSP-lead monitors including power, monitoring visible emissions, taking corrective actions as required, and conducting routine and final project inspections and cleanup.

2. 15% of the lump sum price will be paid when the work is in compliance with the Environmental Protection and Project Cleanup Plan as determined by the Engineer, and the following items (if required) have been completed:

a) Contractor’s written procedure for assessment of visible emissions and releases is provided to the Engineer.

b) Documentation of purchase, rental, or mobilization of the TSP-lead high volume ambient air monitoring equipment and the submittal of the written description of the maintenance and security measures for them.

c) Documentation of preconstruction evaluations of ground, soil, equipment, structures and other surfaces is provided to the Engineer.

d) Documentation of the preconstruction evaluations of the water and sediment beneath and around the project site is provided to the Engineer.

e) Establishment of Regulated areas and approval by the Engineer.

3. 75% of the lump sum price will be paid based on the percentage of work completed.

4. 10% of the lump sum price will be paid after final project cleanup is completed to the satisfaction of the Engineer.

D. **Containment Systems**

1. The lump sum price bid shall include the cost for preparing the containment/ventilation system design, working drawings, and all labor, materials and equipment necessary to install, operate, and remove the containment systems. As directed by the Pay Items, provide a separate price for various types of containment design used on unique sections of the bridge (e.g., girder approaches versus through truss), or for unique methods of paint removal (containment for power tool cleaning versus abrasive blast cleaning).

2. All Work shall be done in a manner satisfactory to the Engineer. Payment for the assessment and cleanup of emissions and releases, and final project cleanup, are addressed above in the Environmental Protection and Project Cleanup item.

3. Progress payments will be made. They will be based upon percentage of completion. The percentage of the total containment cost(s) represented by each section of the bridge (e.g., each span) will be established in advance, and the lump sum price(s) divided accordingly. 60% of the amount will be paid after containment system is ready for surface preparation and accepted by the Engineer.

4. 40% of the amount will be paid after containment is removed from the structure.

E. **Treatment and Disposal of Hazardous Waste, Solvents, Soils, Paint Removal Waste and Waste Water**

1. The lump sum price for the treatment and disposal of paint removal waste, hazardous soil, solvents, etc., and waste water used for cleaning the bridge and equipment shall include the cost of all labor, materials, equipment, sampling, testing, and fees necessary to complete the Work. The cost for the handling, testing, and disposal of hygiene water is included in the Section 832 under Item cost for the decontamination facilities.

2. The lump sum price shall also include the following fees which are the responsibility of the Contractor:

a) Special Assessment on Generation, Treatment or Disposal of Hazardous Waste in New York State. The Contractor shall

complete the quarterly form (TP-550) which is available on the NYS Taxation and Finance web page: https://www.tax.ny.gov/pdf/current forms/haz/tp550 fill in.pdf.

b) The contractor shall pay the fee to the NYS Department of Taxation and Finance on a quarterly basis within 20 days after the end of each quarter. The fee will be based on actual tons of hazardous waste per quarter. The Contractor shall be responsible for all interest and penalties associated with late or non-payment of taxes.

c) Hazardous Waste Fee (Generator Fee) – The Contractor shall pay the fee to New York State Department of Environmental Conservation on an annual basis (once a year). The fee is based on the amount of hazardous waste generated per year. The Contractor shall be responsible for all interest and penalties associated with late or non-payment of fees.

d) Hazardous Waste Regulatory Surcharge Fee – The Contractor shall pay the fee to the New York State Department of Environmental Conservation on an annual basis (once a year). The fee is based on the amount of hazardous waste generated per year. The Contractor shall be responsible for all interest and penalties associated with late or non-payment of fees.

e) The Contractor shall contact the NYS Department of Taxation and Finance and NYS Department of Environmental Conservation for proper procedures and forms for payment.

3. If the City is fined or penalized as a result of the Contractor's performance or lack thereof on this item, in addition to other remedies the City may possess, said fine or penalty will be deducted from the Contractor's payments on this item.

4. Progress payments will be made as follows:

a) 10% will be paid after the following documents are submitted, reviewed and accepted by the Engineer:

1. Waste Handling, Storage, and Disposal;
2. Hazardous Waste Transportation:
3. Hazardous Waste Disposal;
4. Waste Water Disposal Information;
5. Non-Hazardous Waste Transportation and Disposal information.

b) 80% of BID amount will be divided by the scheduled number of months. Payment for the month will be made only after signed manifests from the disposal facility are received by the Engineer for the hazardous waste picked-up from the project site in this month.

Example: 4 pick-ups were made in the month of March. Signed manifests for 3 pick-ups were received by the Engineer. No payment for March will be processed until 4th signed manifest is received.

c) 10% will be paid after all hazardous waste storage areas are cleaned-up and accepted by the Engineer and all weight tickets have been received by the Engineer.

F. **Community Notification** – Payment will be made on a lump sum basis to cover the cost of furnishing all labor and materials to develop and distribute pamphlets and participate in community meetings as directed by the Engineer.

G. **Pay Items** – Payment will be made under the following items:

Item No	Item	Pay Unit
832.10	Worker Protection	Lump Sum
832.20	Environmental Protection and Project Cleanup (for each Structure)	Lump Sum
832.30nnnn	Containment System(s) (for each designated type)	Lump Sum
832.40	Treatment and Disposal of Hazardous Waste, Solvents, Soils, Paint Removal Waste, and Waste Water	Lump Sum
832.50	Community Notification	Lump Sum
832.60	Demolition Cleaning	Lump Sum

END OF SECTION

APPENDIX A – SUBMITTALS

A.01 GENERAL

A. This Appendix identifies the plans, programs, and documentation required prior to mobilization on site, at the start of construction, and during the construction phase.

A.02 PRE-CONSTRUCTION SUBMITTALS

A. **Submittal Schedule and Engineer Acceptance**

1. Submit the following plans and programs to the Engineer for review and acceptance a minimum of 30 days prior to mobilization at the project site. The Contractor shall not begin any paint removal Work until the Engineer has accepted the submittals.

2. Do not construe Engineer acceptance of the submittals to imply approval of any particular method or sequence for conducting the Work, or for addressing health and safety concerns. Acceptance of the programs does not relieve the Contractor from the responsibility to conduct the Work in strict accordance with the requirements of Federal, State, or City regulations and this specification, or to adequately protect the health and safety of all workers involved in the project and any members of the public who may be affected by the project. The Contractor remains solely responsible for the adequacy and completeness of the programs and work practices, and adherence to them.

B. **Project Schedule** – Provide the Engineer with an initial estimate of the workdays required to complete each phase of the project (e.g., mobilization, paint removal, paint application, and demobilization). Include the estimated number of workdays each month when lead exposures are anticipated.

C. **Qualifications, Experience, and Certifications** – Provide written qualification, experience, and certification information for the following:

1. Contractor – Provide proof of SSPC QP-1 and QP-2 certifications.

2. Provide evidence that the laboratories have two certifications. One certification must be from the New York State Environmental Laboratory Approval Program (NYSELAP) in the appropriate category. The second certification must be from either the American Industrial Hygiene Association (AIHA) or Environmental Protection Agency (EPA) in the appropriate category:

MEDIA	CERTIFICATION 1 (mandatory)	CERTIFICATION 2 (One of the following)		
	NYSELAP category	AIHA (IHLAP) category	EPA (NAIHA (LLAP) category	EPA (NLLAP) category
Worker or Regulated Area	Air & Emissions - Lead, Total	Metals	N/A	Air
Hi-volume Air	Air & Emissions - Lead, Total	N/A	N/A	N/A
Paint Chip	Solid and Hazardous Waste - Lead in Paint	N/A	Paint	Paint
Settled Dust	Solid and Hazardous Waste - Lead in Dust Wipes	N/A	Dust	Dust
Soil	Solid and Hazardous Waste - Lead, Total	N/A	Soil	Soil
TCLP	Solid and Hazardous Waste - TCLP	N/A	N/A	N/A

3. A list of NYSELAP certified laboratories can be found at http://www.wadsworth.org/regulatory/elap/certified-labs.

4. A list of IHLAP certified laboratories can be found at

   http://apps.aiha.org/qms_aiha/public/pages/reports/publicScopeView.aspx?ProgramCode=40&Version=2.

5. A list of NLLAP accredited laboratories can be found through

   https://www.epa.gov/lead/national-lead-laboratory-accreditation-program-list.

6. Laboratory for blood lead analysis – Provide the name, address, contact person, and proof that the laboratory conducting the worker blood lead analysis is approved by OSHA and the NYS DOH. A current list of approved labs can be accessed through https://www.osha.gov/SLTC/bloodlead.

7. Certified Industrial Hygienist (CIH) – provide the name, experience and qualifications of the CIH who will be reviewing, approving and sealing the site specific Worker Protection Plan and monthly summary reports of activities and monitoring results. The CIH must have current certification by the American Board of Industrial Hygiene.

8. Industrial Hygienist (IH) - provide the name, experience, and qualifications of the IH, if one is used. The IH must meet one of the following qualifications:

   a) Current certification by the American Board of Industrial Hygiene (Certified Industrial Hygienist - CIH).

b) A Bachelor's Degree in engineering, chemistry, physics, biological sciences, industrial hygiene, toxicology, the environmental sciences or a related field, and at least three years of documented full-time work as an IH under the supervision of a CIH, including field and sampling experience.

c) A Master's Degree in one of the above fields, and at least two years of documented full-time work as an IH under supervision of a CIH, including field and sampling experience.

9. Competent Person, CIH, IH, supervisors, and foremen – Provide proof that the competent person, IH, and all project superintendents and foremen, have successfully completed the SSPC C3, SSPC C5, Competent Person and Supervisor training, with refresher training completed within the last 12 months, as well as an Engineer-approved course that addresses the procedures and documentation specific to the Project. OSHA 40-hour HAZWOPER certification plus 8 hours of annual refresher training is required for the competent person/supervisor responsible for managing or handling hazardous waste. An OSHA 24-hour HAZWOPER certification plus 8 hours of annual refresher training is required for workers who will be handling hazardous waste.

D. **Contractor Chain of Command**

1. Submit a listing of key Contractor personnel, including names and relative positions, home addresses, and telephone and pager numbers.

2. Include the names and telephone/pager numbers for contact persons who are available on a 24-hour 7 day a week basis in the event of emergencies.

E. **Worker Protection Plan**

1. Submit two copies of a written Worker Protection Plan to the Engineer for review and acceptance. The Worker Protection Plan must provide for the protection of Contractor workers from all project hazards including but not limited to fall protection, confined space (if applicable), hearing and eye protection, and exposure to hazardous materials or conditions. If Sections 831 and 832 are specified for the work, only a single worker protection plan is required.

2. Include as part of the plan, or in a separate submittal, a binder containing SDS for all materials that will be used on the Project site. If all SDS are not available at the pre-construction stage, provide the SDS before using the product on site.

3. Address as part of the Worker Protection Plan, or in a separate document, the personal protective equipment and hygiene practices that will be invoked to protect workers from exposure to pigeon droppings in accordance with NYSDOT Safety Bulletin SB-94-4.

4. The Worker Protection Plan must be a project-specific program, prepared under the direction of, and signed by, a Certified Industrial Hygienist (CIH).

5. Address worker protection from lead in strict accordance with 29 CFR 1926.62 and the requirements of this Specification, as well as from other toxic metals in the paint (e.g., 29 CFR 1926.1126 for hexavalent chromium, 29 CFR 1926.1127 for cadmium, and 29 CFR 1926.1118 for inorganic

arsenic). When toxic metals are present in the paint for which OSHA has not developed a comprehensive health and safety standard, include provisions to assure that the workers will not be exposed above the Threshold Limit Values (TLVs) established for the metal as identified in 29 CFR 1926.55. In the event of a conflict between the requirements of this specification and an OSHA standard, follow the most restrictive requirement.

6. Address the requirements of 29 CFR 1926.62, this specification, and other applicable Federal or State regulations in the Worker Protection Plan. A Worker Protection Plan is required any time that exposures to lead or other toxic metals exceed the Action Level. These elements of the Worker Protection Plan include, but are not limited to, the following:

   a) A description of the Contractor's lead health and safety organization, including the responsibilities and qualifications of the CIH, IH and the competent person.

   b) A description of arrangements for ensuring that subcontractors, if any, will comply with the Worker Protection Plan.

   c) A description of each activity which will entail a risk for lead exposure.

   d) Descriptions of the engineering, administrative and work practice controls that will be used to reduce exposure. As required by 29CFR1926.62, all feasible engineering, administrative and work practice controls must be implemented before considering the use of respirators to reduce exposure.

   e) A respiratory protection program in compliance with 29 CFR 1910.134 including commitments to provide the necessary fit testing, respirator training, and medical evaluations. When lead is present, include the provisions of 29 CFR 1926.62. When hexavalent chromium is present, include 29 CFR 1926.1126. When cadmium is present, include 29 CFR 1926.1127. When inorganic arsenic is present, include 29 CFR 1926.1118. Address the selection, use, maintenance and inspection of respirators, and qualifications for respirator users.

   f) A description of the Personal Protective equipment (PPE) to be provided and plans for regular laundering or replacement of protective clothing.

   Provide the name, address, and qualifications of the launderer, if one will be used, for the cleaning of reusable clothing. Provide a letter from the laundry indicating that it is permitted to handle clothing contaminated with lead and/or the other toxic metals of concern and that it disposes of wash water in accordance with all local, state and federal regulations.

   g) A description of the hygiene practices the employees will be required to follow, and the procedures that will be implemented for the proper storage, testing, and disposal of hygiene and laundry wash water. Include a description, floor plan, and proposed number of decontamination facilities and hand wash stations that will be provided.

   h) A description of the Contractor's medical surveillance and removal program, including plans for notifying employees and the Engineer

of results. This description shall include the name and address of the clinic(s) where testing will be performed, and of the OSHA-approved laboratory where blood samples will be analyzed.

i) Plans for worker and supervisor lead training.
j) An initial assessment of anticipated exposure level(s), including any relevant historical exposure monitoring data.
k) Plans for performing exposure monitoring, and for notifying employees and the Engineer of results.
l) Plans for posting warning signs in high exposure areas.
m) Plans for regular inspections of the jobsite by the CIH (or IH) and the competent person. The CIH (or IH) shall inspect the site at least monthly and the competent person at least daily.
n) Provisions for providing parking area(s) for worker's cars where they will not be exposed to lead.
o) Plans for updating the Worker Protection Plan.
p) Plans for keeping and maintaining the records and issuing monthly summary reports.
q) Include the name of the competent person who will be making daily inspections of project activities to ensure compliance with the program, and the signature of the CIH responsible for the development of the Plan.

7. Verify that any Subcontractors working for the Contractor are included in the program or in a separate program which meets the requirements of this Specification. If Subcontractors are operating under a separate program, include the program with the submittals.

8. Include statements that the Contractor will provide City employees, City representatives (such as REI Consultants engaged in inspection activities, and employees of the environmental monitoring firm), with the same OSHA related equipment and facilities that are provided to the Contractor and sub-contractor personnel. These include:

a) Respiratory protection including cleaning and maintenance, and work areas to wash faces and respirator face piece. Provide both HEPA and organic vapor filters and replacements. City employees or representatives are responsible for assuring that all of their personnel have the necessary medical surveillance, are qualified to wear the respirators, and have been properly fit tested.
b) Protective work clothing including laundering or disposal.
c) Clean change areas including separated storage facilities for street and work clothes.
d) Hand washing facilities per 29 CFR 1926.51.
e) Shower facilities per 29 CFR 1926.51.
f) Training per 29 CFR 1926.62 (l).

9. Review the Worker Protection Plan at least annually during the portion(s) of the Project which involve the disturbance of toxic metals. Revise and update as necessary to comply with any newly issued Federal, State or local regulations or revisions to existing regulations. Verify that the CIH/IH signs off on all reviews and revisions.

10. Submit a letter to the Engineer if it is proposed that objective data, rather

than monitoring, will be used to prove that exposures from a given activity cannot exceed the Action Level for lead or other metals contained in the coating. Provide the objective data in writing, signed by a CIH/IH in strict accordance with the requirements of 29CFR1926.62 (d)(3) and 29 CFR 1926.1126(k)(3). The Contractor can rely upon this data in lieu of monitoring only upon acceptance by the Engineer.

F. **Environmental Protection Plan** – Submit an Environmental Protection Plan to the Engineer. The plan shall include but not be limited to, the following elements:

1. Assessment of Visible Emissions and Releases

   a) Provide a written program for the observation of visible emissions during Project activities. Note that these inspections by the Contractor are in addition to the observations that will be made by the Engineer or environmental consultant.
   b) Visual assessments of emissions are required on a continuous basis while dust producing operations are underway. Include the methods of observation and inspection that will be made, and areas or work activities that will be observed.
   c) Include a statement that the Contractor will shut down operations, adjust work practices, modify containment and take other steps as necessary to comply with the results of the visible emissions assessments as directed by the Engineer or the environmental consultant.

2. Establishment of Regulated Areas - Provide written procedures in accordance with the requirements of Part 3.0 of this Specification for the instrument monitoring of airborne exposures surrounding project activities, and the establishment of visible barriers (regulated areas) to control the access of personnel within the exposure zones.

3. Ambient Air Monitoring

   a) Provide a written description of the TSP-lead high volume ambient air monitoring equipment the Contractor will provide for the Work. Include a description of the power that will be provided to operate the units. Provide catalog cut sheets for the monitors and power generators (if used).
   b) Provide a written description of the maintenance and security measures that will be taken to protect the monitoring equipment (i.e., full time guard, removal and reinstallation of the equipment each day, etc.). Describe the provisions made for setting up and removing (or securing) the monitors each day, as stipulated in this Section.
   c) The environmental consultant will also be conducting real time monitoring (using their own equipment) to evaluate airborne particulate levels at various locations such as the containment seals and entryways.
   d) Include a statement that the Contractor will shut down operations, adjust work practices, modify containment and take other steps as necessary to comply with the results of the high volume or real time monitoring as directed by the Engineer or the environmental consultant.

4. Evaluations of Ground (Soil), Equipment, Structures and Other Surfaces

   a) Provide a written program for the visual inspection of the ground, soil, equipment, and other surfaces beneath and around the project site for the presence of project dust and debris. Include the frequency of the inspections, and the inspection procedures that will be followed both during the Work and upon completion of project activities. Note that these inspections by the Contractor are in addition to the observations that will be made by the Engineer or environmental consultant.

5. Water and Sediment Evaluations

   a) Provide a written program for the visual inspection of the water and sediment beneath and around the project site for the presence of project dust and debris. Include the frequency of the inspections, and the inspection procedures that will be followed both during the Work and upon completion of project activities. Note that these inspections by the Contractor are in addition to the observations that will be made by the Engineer or environmental consultant.

6. Cleaning/Clearance Plans

   a) Provide a written program identifying the procedures, methods, equipment, and materials that will be used to conduct daily and final cleanup of project dust and debris. Include a description of the cleanliness examinations that will be made by the competent person (e.g., both visual examinations and more detailed inspections involving wiping the surfaces as described in Section 3.06). Include provisions for recleaning equipment that fails wipe tests (<200 µg/sf) that may be conducted by the environmental consultant.
   b) Indicate that these inspections are conducted to assure that the work site and surrounding equipment, property, structures, ground, soil, water, sediment, and other surfaces have been properly cleaned and are free of visible paint chips, blasting material, or other debris in compliance with this Section. Cleaning is required routinely each day and upon completion of all project activities.
   c) When wet wiping or washing is employed, identify the solutions proposed for cleaning the surfaces and equipment.

7. Sensitive Natural Resources and Endangered or Protected Species

   a) Contractor shall submit a site-specific sensitive natural resources and endangered or protected species plan and all applicable permits and licenses required by state and, if applicable, federal law.
   b) If Sections 831 and 832 are specified for the work, only a single sensitive natural resources/ endangered and protected species plan is required.

G. **Spill Response Plan**

1. Develop and implement a Spill Response Plan to control and cleanup spills or dispersions of deteriorated paint chip material, and/or abrasive blast material.

2. Specifically identify the procedures that will be used to comply with the following steps:

   a) Containment of the breach.
   b) Immediate notification of the Engineer and, as directed by the Engineer, other agencies such as the Coast Guard or the New York State Department of Environmental Conservation Spill Bureau.
   c) Collection and removal of the spilled material followed by washing and wiping and/or HEPA vacuuming of the affected area.
   d) Visual inspections to confirm complete removal of the material.
   e) Changes to work practices and/or equipment and material used to prevent a reoccurrence.

H. **Noise –** Provide a Construction Noise Mitigation Plan as per NYCDEP that defines the steps taken to comply with the standard, materials used to control noise, and worker training. Include copies of any required permits for after-hours work. If compliance with the NYCDEP Noise Code and the Construction Noise Mitigation Plan is not possible then prepare an Alternate Noise Mitigation Plan for approval by the NYCDEP. If Sections 831 and 832 are specified for the work, only a single Noise Mitigation Plan is required.

I. **Containment Plans and Drawings** – Provide six (6) complete sets of detailed working drawing(s) of each containment system proposed for use on the structure. The drawings shall be prepared and stamped by a registered, licensed Professional Engineer. No paint removal work is allowed to begin until the drawings have been reviewed and accepted by the Engineer.

1. Provide plan and elevation views of the containment enclosure in relation to the bridge structure.

2. A design analysis of the loads on the bridge due to the containment enclosure including: maximum dead and live loads of the enclosure, the workers, blast abrasive, and equipment; maximum allowable load for the floor and working platform; wind loads imposed on the structure by the enclosure; and maximum wind velocity that the containment enclosure is designed to withstand.

3. If the containment system is supported by the bridge, the working drawing submittal shall include certification by the Professional Engineer that the loads imposed do not cause the overall stress level of any element of the bridge to exceed the Operating Allowable Stresses defined in AASHTO Manual for Maintenance Inspection of Bridges (current edition).

4. The analysis shall account for all loads on the structure, including the enclosure dead load, worker live load, blast abrasive load, equipment load, wind load, structure dead load, and live load plus the impact. The highway live load used for analysis purposes shall be either a HS20 truck or equivalent lane loading, whichever is greater, unless a different highway live load is shown on the plans.

   Except as noted, the analysis shall use the loadings and design assumptions in the NYSDOT Standard Specifications for Highway Bridges.

5. Provide all data, calculations, and assumptions used for the design of the containment and ventilation system. Provide air make-up locations, the

location(s) of the exhaust ductwork, and the type and location of dust collector(s) that will be employed. Provide information on airflow velocities through the containment. Provide manufacturer's data sheets, equipment weights, and airflow capacities of the equipment.

6. Provide information on the maximum amount of surface preparation debris, in inches, that the containment can support.

7. Provide a description of the type of containment material(s) used for the walls and ceiling, and the type of flooring system or working platform employed. If a barge or another type of floating platform is used, include details regarding its construction, such as materials and dimensions, how the platform will be tied-off, how the debris will be collected and offloaded, etc.

8. Provide technical data sheets, specification sheets, any other information needed to thoroughly describe the materials proposed for use.

9. Identify the methods by which the containment enclosure will be supported or attached to the bridge (e.g., rollers, clamps). Welding, bolting, or similar connections will not be allowed.

10. Identify the methods that will be used to seal the joints (seams) formed when fabricating the containment enclosure, and the method that will be used to seal the mating joints between the containment enclosure and the bridge structure.

11. Identify the method that will be used to seal the entryway.

12. Provide a description of how the drainage run-off from existing deck drains will be routed through the enclosure.

13. Provide the plans for maintaining the operation of any existing equipment or bridge facilities during the Work (e.g., navigation, anti-collision, aerial, roadway, and parking lot lighting).

14. Provide the type, size, and configuration of auxiliary lighting that will be provided for inside the containment enclosure.

15. Provide information on any temporary heating units proposed for use, fuel to be used and the safety measures to be employed for heater use and fuel storage.

16. Describe the methods that will be used to provide worker access to the enclosure (personal lifts, scaffolds, etc.) and the procedures and equipment that will be used to protect workers from falls.

17. Provide details on how the use of the containment enclosure will be coordinated with the maintenance and protection of traffic.

    Encroachments onto roadways, and clearances over waterways and railroads shall be clearly identified. Structures that span a navigable waterway are subject to regulation by the U.S. Coast Guard, and possibly the U.S. Army-Corps of Engineers, the N.Y.S. Thruway Authority – Office of Canals, and the N.Y.S. Dept. of Environmental Conservation.

18. Provide details on how the containment enclosure is assembled and disassembled and moved to a new location on the structure as surface

preparation work progresses. Indicate how the dust collector will be included in the containment enclosure. All other pertinent details relating to the containment enclosure shall be included with the working drawings as notes, or as written narrative.

19. Describe the provisions made for moving the containment out of navigation lanes when working over active waterways.

20. Describe the provisions made for moving or lowering the containment in the event of inclement weather. Provide information on the maximum wind speed the structure can withstand, and at what wind speed the containment must be dismantled.

21. Identify the methods that will be used to verify adequate air flow characteristics and negative pressure within containment.

22. Describe the containment inspection and cleaning procedures that will be undertaken.

23. Include any other information needed to thoroughly describe the containment plan.

J. **Emergency Containment Demobilization Plan**

1. Provide a detailed plan for dropping the containment upon notification of inclement weather, including but not limited to conditions such as sustained wind speeds of 40 mph (64 kilometers/hour), gusts greater than 40 mph (64 kilometers/hour), wind and gusts in excess of the containment design, or heavy snow/ice.

2. Include the methods and procedures that will be followed to assure that:

   a) all equipment and tools are secured,
   b) the containment is cleaned of loose dust and debris,
   c) all containment system roof and wall enclosure elements that could contribute to adding wind load to the bridge structure are removed or lowered (excluding containment framing), and
   d) snow and ice are removed from the containment routinely, as well as under storm conditions.

K. **Lockout/Tagout Plan**

1. Provide the procedures in accordance with 29 CFR 1910.147 and 1910.333 that will be followed for lockout/tagout of existing electrical utilities within containment or other work areas as appropriate.

2. Include provisions for coordinating lock-out/tag-out activities with the City and the Utilities.

3. If Sections 831 and 832 are specified for the work, only a single lockout/tagout plan is required

L. **Waste Management Plan**

1. **Waste Handling, Storage, and Disposal**

   a) Provide the procedures that will be followed for the collection of random and representative samples of the waste for sampling and testing, and the testing and analysis procedures that will be used to

characterize the waste before shipping.

b) Provide procedures for the site handling, storage, container inspection, packaging, labeling, manifesting, transporting, and disposal of the waste. Include a written containment plan for adequately shielding and protecting the surrounding area when transferring and/or conveying hazardous waste from one container to another to prevent any dispersion or spills.

c) Provide a copy of the weekly waste storage area inspection form and an explanation of the procedure that will be used to assure hazardous waste does not remain on-site for more than 45 days.

d) Provide a detailed contingency plan that addresses worker training and the notification, containment, cleanup, and reporting that will be undertaken in the event of a spill during the jobsite handling and transportation of the waste.

2. **Hazardous Waste Transportation**

a) Submit evidence that each proposed hazardous waste transporter has a valid 6 NYCRR Part 364 Waste Transporter Permit. Provide a copy of the Certificate of Insurance.

b) If it is proposed that the transportation pass through other states, provide evidence that the transporter complies with the applicable laws, codes, rules and regulations of the respective states. Provide copies of all licenses and certifications for States through which the transporter will pass.

3. **Hazardous Waste Disposal**

a) Provide the name, address, license or permit number, qualifications, certificate of insurance and contact person of each proposed legally permitted hazardous waste disposal facility that will be used.

b) Advise each proposed recycling or waste disposal facility that paint removal waste will be generated (e.g., abrasive/paint debris), and identify the metals that the waste will likely contain. Based on that information, request a letter from each facility, stating that the facility can accept this type of waste, is authorized to accept the waste under the laws of the State of residence, has the required capability to treat and dispose of the materials, and will provide or ensure the ultimate disposal method indicated on the Uniform Hazardous Waste Manifest.

c) Provide the Engineer with the original letter signed by a legally authorized representative of the facility prior to shipping any hazardous waste but within enough time to ensure all wastes are disposed within Contract required time frames. Include a copy of permits or letter of authorization to operate the facility and provide a signed statement from the disposal facility that the waste shipping containers that the Contractor proposes to use are acceptable to the facility.

d) If recycled steel grit abrasives will be used, the Contractor shall advise the disposal facilities that the paint removal waste must be handled and stabilized as if it tested hazardous, even if the initial TCLP test results are below hazardous thresholds. Provide the

Engineer with the proposed means of stabilization that will be used by the facility to comply with the requirements of this specification.

e) If it is proposed that a secondary smelter will be used for the recycling of the hazardous waste, provide evidence that the smelter holds a valid EPA and consignment state approval for the treatment of the hazardous materials present in the waste that will be generated (e.g., D008 in the case of lead-containing waste).

4. **Waste Water Disposal Information**

a) Submit the name, address, and contact person of the facility that will be accepting the wastewater for disposal. Wastewater under this item is water used for washing and cleaning the bridge and equipment. The handling and disposal of hygiene water is included as part of the decontamination units under the Worker Protection Plan.

b) The Contractor shall advise the facility of all of the toxic metals and anticipated concentrations that the water will likely contain. Based on that information, request a letter from the proposed facility stating that the facility can accept waste water, is authorized to accept the waste under the laws of the State of residence, and has the required capability to treat and dispose of the waste water. If the facility indicates that the wastewater can be placed into the sanitary sewer system, include such an authorization in the letter. Provide the Engineer with the original letter signed by a legally authorized representative of the facility, including a copy of permits or letter of authorization to operate the facility.

5. **Non-Hazardous Waste Transportation and Disposal Information**

a) Provide the name, address, license or permit number, qualifications, and contact person of each proposed hauler of non-hazardous waste (note that paint removal waste has been declared hazardous).

b) Submit the name, address, license or permit number, qualifications, and contact person of each permitted waste landfill that will accept the non-hazardous (construction) waste, and the waste which passes TCLP, but which contains toxic metals.

c) Provide a letter of intent from the proposed legally permitted landfill operator agreeing to accept waste which passes TCLP, but which contains toxic metals.

A.03 CONSTRUCTION START UP SUBMITTALS

A. **Worker Protection** – Submit the following documentation to the Engineer prior to the initiation of lead exposure-producing operations:

1. Documentation of purchase or mobilization of respirators and personal protective equipment (PPE).

2. Documentation of purchase, or rental, and mobilization of decontamination facilities before beginning the project.

3. Certification of completion of lead training for supervisors and employees (including SSPC C3, SSPC C5 and City project-specific requirements, such

as HAZWOPER).

4. Documentation of respirator fit testing for all employees who will wear respirators.

5. Verification that the employees who will potentially be exposed to lead above the Action Level have successfully completed the necessary medical surveillance. For employees who refuse to participate in the medical examinations and biological monitoring, provide written proof signed by the employee, that they were offered, but declined the examinations and monitoring.

6. Documentation that workers have received the lead training required in 29 CFR 1926.62 (l).

B. **Certification of Containment Installation**

1. Prior to working within each unique containment design, submit a letter signed and sealed by the containment design engineer stating that the containment system has been assembled as shown on the approved, signed and sealed drawings. The inspection shall be performed by the design engineer, or a designee employed by the same firm and working under the direction of the design engineer,

2. If the containment is not installed in accordance with the design drawings, and field modifications are made, issue supplemental calculations for the new design for Engineer review and approval in accordance with the original submittal requirements.

A.04 CONSTRUCTION PHASE SUBMITTALS

A. **Competent Person Daily Reports** – Make the competent person's daily oversight reports or logs available for review by the Engineer or environmental consultant when requested. Include enough information and observations to demonstrate compliance with the specification requirements and the documentation requirements of the following plans:

1. Compliance with the Worker Protection Plan.

2. Compliance with Environmental Protection Plan including daily and final project cleanup.

3. Compliance with the Waste Handling Plan.

4. Compliance with the Containment submittals.

B. **Worker Protection** – Submit the following documentation to the Engineer throughout the course of the project:

1. For all new supervisors and employees who begin Work after the initial project start-up, before the individual begins working on the project, provide certification of completion of lead training (including SSPC C3 and project-specific requirements), respirator fit testing, and verification that they have successfully completed the necessary medical surveillance. For employees who refuse to participate in the medical examinations and biological monitoring, provide written proof signed by the employee, that they were offered, but declined the examinations and monitoring.

2. Worker exposure monitoring results (included in the monthly summary report described below).

3. De-personalized results of all employee medical testing at the end of each month that testing is performed (included in the monthly summary report described below).

4. Documentation of any medical removals within one day of the removal, a description of what triggered them, and the corrective measures taken.

5. Copies of the hygiene water test results (water used for washing, showering, or laundering clothing on site). Tests are to address all of the parameters established by the POTW to confirm the acceptability of the filtration. Provide the Engineer with the test results within five days of receipt and before disposal or discharge of the water.

6. Any revisions or updates to the Worker Protection Plan immediately upon development.

7. Confirmation that the parking lots for worker cars are not in lead-exposure areas.

8. SDS for all new products and materials brought onto the Project site. At the Engineer's discretion, the Contractor may be directed to maintain the SDS at the Project site only, rather than provide a separate copy to the Engineer in addition to the Project site copy.

9. Monthly progress reports - Except where the Contractor can document that employee lead exposure will be below the Action Level, at the end of each month of Work which entails potential lead exposure, submit a report to the Engineer which has been reviewed, signed, and stamped by the CIH/IH. Submit the report within 10 calendar days after the completion of each month. This report shall contain the following elements:

    a) A summary of the Work entailing potential lead exposure that was completed in the last month including a summary of the observations made by the CIH/IH during the monthly visit and any required intervention activities.
    b) A statement that, with the exception of any deficiencies noted, the past month's work has been in compliance with the requirements of 29 CFR 1926.62, this specification, and all other applicable Federal and State regulations.
    c) A description of any interventions or deficiencies noted, along with a summary of the corrective actions taken.
    d) A summary of the results of any exposure monitoring or medical testing which was completed in the past month. To protect worker privacy, these results shall not include the individual names or Social Security numbers of the workers tested. Instead, workers shall be identified by trade (e.g., ironworker, painter, laborer, etc.) and with an individual control number so that their exposure can be tracked throughout the project.

10. Results of any exposure monitoring conducted on the Engineer and City Agents. Provide the results within the same five day notification period required for Contractor employees.

C. **Visible Emissions and Releases**

1. Record the results of the daily assessments of visible emissions and releases in a log or report form approved by the Engineer. Include the following information at a minimum: Contract number, Contractor's name, Work location, date of observations, activities being performed that day, daily observation results (location and duration of emission), general comments, outline of the visible emission criteria, notation of compliance or noncompliance with the visible emission criteria, notification of Agencies as applicable, corrective actions, and signature block for the observer.

2. Provide the Engineer with an immediate verbal report each time that unacceptable visible emissions or releases are observed.

3. Document all cases where Work has been halted due to visible emissions or releases, the resulting clean up activities performed, the reason or explanation for the emission or release, and the corrective action taken to avoid a reoccurrence. Provide the written report to the Engineer within 48 hours of the occurrence.

D. **Regulated Area Monitoring** – The laboratory must provide the results of regulated area monitoring to the Contractor within three days of the field sampling. Provide the test results to the Engineer verbally within one day of receipt, and in writing within five working days thereafter.

E. **Containment Scaffolding Inspection Log** - Maintain, and make available for review by the Engineer, a daily log of the inspections of scaffolding, platforms, and wire ropes in accordance with the OSHA requirements. Conduct the inspections each shift, and after any occurrence which could affect the structural integrity of the scaffolding or wire suspension ropes.

F. **Air flow and Negative Pressure Measurement Log** - Maintain, and make available for review by the Engineer, a log of air flow and negative pressure measurements.

G. **Temporary Heating Units** - If the use of temporary heating units was not anticipated at the time of the initial submittals, notify the Engineer at least one week in advance of use of heating units. Submit, for approval, information on fuel to be used and the safety measures to be employed for heater use and fuel storage.

H. **Waste Management**

1. **Waste Storage Logs** – Maintain daily waste storage logs and make them available for inspection by the Engineer or environmental consultant.

2. **Waste Analysis Reports**

a) Direct the laboratory to send the original waste analysis test reports directly to the Engineer, with copies of the results to the Contractor. The reports must be issued no later than five calendar days after the representative samples are submitted for testing, with a copy being sent by facsimile transmission or by email to the Engineer the same day the report is sent.

b) The reports shall contain at a minimum the following information: the identity of the waste stream(s) analyzed, the sampling method

used to get random and representative samples, the number of samples collected and tested, dates of sampling and testing, laboratory test procedures utilized, the names and signatures of the individuals collecting the samples and conducting the laboratory tests, an interpretation of the test results, and chain-of-custody forms.

3. **Waste Manifests and Disposal Documentation**

a) **Waste Manifest**

(1) The Contractor shall prepare the Uniform Hazardous Waste Manifest for each shipment, including the LDR (Land Disposal Restriction) certification, which will be attached to the manifest. The Engineer will sign the Generator's Certification on the manifest and maintain copies of the original manifest and signed copies upon completion of disposal.

(2) If the signed manifest is not received from the disposal facility within thirty-five (35) days of shipment, as directed by the Engineer, the Contractor shall initiate tracking of the waste by contacting the Transporter and Treatment, Storage and Disposal (TSD). If the completed manifest is not received within forty-five (45) days, the Contractor shall complete the EPA Exception Report in accordance with 40 CFR 262.42,

b) **Disposal Certification** – The Contractor shall provide a certification for each manifested shipment that the waste was accepted by the recycling or disposal facility, and properly treated and disposed of.

I. **Daily and Final Project Cleanup**

1. Maintain a log or report confirming the visual cleanliness of the jobsite each day, the cleanliness of containment prior to movement, and the more detailed testing of cleanliness (wiping with a cloth and inspecting for dislodged material) prior to dismantling, and cleanliness of contractor equipment prior to removal from the project site. Include the results of any wipe samples conducted on equipment by the environmental consultant.

2. Prepare a letter report presenting the results of the inspections conducted to verify the final cleanliness of the project site, surrounding property, waterways, equipment, buildings, and structures. Submit the report to the Engineer within one week of the final inspection.

3. Include a summary of any problems or releases that occurred during the project, and the cleanup and corrective action measures that were taken to resolve the problem.

END OF SECTION

APPENDIX B – TERMS AND DEFINITIONS

1. **The terms and definitions below only apply to Section 832.Action Level** – Employee exposure, without regard to the use of respirators, to an airborne concentration in micrograms per cubic meter of air (µg/m^3) calculated as an eight hour time-weighted average (TWA). The Action Level for lead is 30 µg/m^3.

2. **Acceptance Criteria** – Minimum standards for the content of programs, plans, procedures, and designs required by this Specification for the performance of the Contract. Acceptance criteria will be the basis for judging the responsiveness of Contractors' programs and will also be used as a basis for suspending work, if necessary.

3. **Agency** – New York City Department of Design and Construction (NYCDDC)

4. **CERCLA** – Comprehensive Environmental Response, Compensation, and Liability Act; commonly called Superfund. Federal laws addressing the cleanup of hazardous waste sites. Amended in 1986 by the Superfund Amendments and Re-Authorization Act (SARA). EPA implementing regulations are contained in 40 CFR 300-373.

5. **CIH** – Certified Industrial Hygienist holding valid certification by the American Board of Industrial Hygiene (ABIH).

6. **Competent Person** – One who is capable of identifying existing and predictable l hazards in the surroundings or working conditions and who has authorization to take prompt corrective measures to eliminate them. The Competent Person is either an employee of the Contractor, or is under contract directly to the Contractor.

7. **Compliance Program** – A document prepared by the Contractor performing the removal of the lead-containing paint giving a detailed description of engineering controls, work practices, and safety precautions that will be adopted for the execution of the work. The Compliance Program is part of the overall Worker Protection Plan in this specification.

8. **Containment System** – A system which minimizes or prevents debris, generated during surface preparation or the removal of lead-containing paint, from entering into the environment, and which facilitates the controlled collection of the debris for disposal. It includes the cover panels, screens, tarpaulins, scaffolds, supports, and shrouds used to enclose entire work areas or the paint removal tools. Containment systems may also employ the use of ground covers or water booms.

9. **Contractor** – The person or corporate body that is party to the contract and bound to execute the work in accordance with the contract.

10. **Discharge** – Accidental or intentional spilling, leaking, pumping, pouring, emitting, emptying, or dumping of hazardous material, waste water or waste into or on any land, water or airspace.

11. **Disposal** – The discharge, deposit, injection, dumping, spilling, leaking or placing of any solid or hazardous waste into or on any land or water, so that no solid waste or hazardous waste, or any constituent thereof, may enter the environment or be emitted into the air or discharged into any waters, including ground waters.

12. **Disposal Facility** – A licensed facility where hazardous and non-hazardous waste is intentionally placed, and in which the waste will remain after closure.

13. **Emission** - A release of material to the air, water, or ground.

14. **Employee Lead Exposure** – Exposure which would occur if the employee were not using

a respirator.

15. **Engineer** – The designated City employee, or authorized representative, who is responsible for the project including the authority to accept or reject Work on behalf of the Agency.

16. **Engineering Controls** – The use of technologically feasible controls in the work areas for the purpose of reducing and maintaining employee exposure to lead to or below the PEL or as low as feasible, and for controlling emissions from the work area. Examples of engineering controls are mechanical ventilation for enclosures, or methods which capture the dust at the point of generation such as vacuum blast cleaning.

17. **Environmental Consultant** – Individual or company employed by the City on a periodic or full time basis to monitor the lead removal project to assure that it is conducted in an environmentally protective manner in accordance with the provisions of this specification and the contract documents.

18. **EPA** – The U.S. Environment Protection Agency. Regulations are contained in Title 40 of the Code of Federal Regulations (40 CFR).

19. **EPA Hazardous Waste Number** – The Federal number assigned to each hazardous waste. The number assigned to lead waste is D008.

20. **Flood Plain** – A flat, low-lying portion of a stream valley subject to inundation during a flood.

21. **Generator** – Any facility owner, operator or person whose act or process produces hazardous waste or whose act first causes a hazardous waste to become subject to regulation. The City and Contractor are co-generators for the work under this Specification. The City will obtain the EPA ID Number.

22. **Hazardous Waste**– Waste that is classified as hazardous due to its concentrations of regulated hazardous substances. Wastes may be classified as hazardous based on the characteristics of toxicity, ignitability, corrosivity, and reactivity. Paint debris is typically classified as hazardous waste based on the characteristic of toxicity. This is determined by testing representative samples of the waste using the Toxicity Characteristic Leaching Procedure (TCLP). If the leachate contains any of the eight metals or other substances in concentrations at or above limits established in 40 CFR 261, Identification and Listing of Hazardous Wastes, it is classified as hazardous.

23. **HEPA** – A high efficiency particulate air filter (HEPA filter) removes from the air 99.97% or more of the aerosols having a diameter of 0.3 microns.

24. **Ignitability** – A characteristic of waste that causes it to be classified as hazardous. Waste is determined to be ignitable if it is found to be capable of being set afire, or of bursting into flame spontaneously or by interaction with another substance or material, when tested in accordance with 40 CFR 261. Spent solvents and liquid paint waste typically fall into this category.

25. **Leachate** – The amount of a specific substance (e.g., lead) that is carried off or dissolved out of a material. The amount of leachable lead that classifies paint debris as being hazardous is 5 mg/L (ppm) when tested by TCLP.

26. **Lead** – Metallic lead, all inorganic lead compounds, and organic lead soaps. The lead pigments used in paints comply with this definition.

27. **µg/m^3** – Micrograms per cubic meter. Common units for reporting airborne concentrations of lead and other aerosols.

28. **mg/L** – Milligrams per liter. Common units for reporting a concentration of a specific substance in units of mass per volume (e.g., amount of hazardous material contained in paint debris).

29. **SDS** –Safety Data Sheet. Data provided by the manufacturer of a product that identifies the hazardous constituents contained in the product together with precautions that need to be taken during its handling and use.

30. **NAAQS** – National Ambient Air Quality Standards. Federal regulations which establish limits on allowable pollutants in the ambient air. Lead and particulate matter are included. Regulations are found in 40 CFR 50.

31. **NIOSH** – National Institute of Occupational Safety and Health.

32. **OSHA** – Occupational Safety and Health Administration. Standards are contained in Title 29 of the Code of Federal Regulations, Parts 1910 and 1926 (29 CFR 1910 and 29 CFR 1926) are the standards for General Industry and Construction Industry, respectively.

33. **Owner** – New York City

34. **Paint Removal Waste** – Removed paint particles, rust and other contaminants combined with the material (e.g., abrasives) used to remove the paint. The waste stream from the recycling equipment when blasting with recyclable steel grit is also considered a paint removal waste.

35. **Permissible Exposure Limit (PEL)** – Employee exposure, without regard to the use of respirators, to an airborne concentration in micrograms per cubic meter of air (µg/m^3), calculated as an eight hour time-weighted average (TWA). The PEL for lead is 50 µg/m^3 as an 8 hour TWA. If an employee works for longer than 8 hours in a given day, the PEL is reduced using the following formula:

    Adjusted PEL = (PEL x 8) ÷ (hours worked in the day)

36. **PM-10** – Particulate matter of an aerodynamic equivalent diameter of 10 microns or less. PM-10. Term associated with the collection of airborne particulate using high volume ambient air samplers.

37. **POTW** – Publicly Owned Treatment Works (e.g., waste water treatment facility).

38. **PPM** – Parts per million. Common units for reporting low concentration of a specific substance (e.g., amount of hazardous material contained in paint debris). One (1) percent is equal to 10,000 ppm.

39. **RCRA** – Resource Conservation and Recovery Act. RCRA regulations addressing waste handling and disposal and are found in 40 CFR 240 through 280. Hazardous waste regulations are found in 40 CFR 260 through 268.

40. **Regulated Area** – Area established by the Contractor, outside of which the airborne concentrations of lead or other toxic material can reasonably be expected to not exceed the corresponding Action Level.

41. **Representative Sample** – A sample of debris from a pile, drum, or container of debris which can be expected to exhibit the average properties of that pile, drum, or container of debris.

42. **SSPC** – SSPC: The Society for Protective Coatings. An independent, non-profit association of engineers, technical specialists, owners and contractors whose mission is to advance the technology and promote the use of protective coatings to preserve industrial, marine, and commercial structures, components and substrates.

43. **TCLP** – Toxicity Characteristic Leaching Procedure. Laboratory tests conducted on wastes that determine the amount of hazardous materials that leach out into a test solution. The test is intended to simulate the solubility of hazardous material if it was placed in a municipal waste landfill. TCLP testing is defined in 40 CFR 261, Appendix II.

44. **Threshold Limit Value (TLV)** – The time-weighted average concentration for a normal 8-hour workday and a 40-hour workweek, to which nearly all workers may be repeatedly exposed day after day, without adverse effect.

45. **Time Weighted Average (TWA)** – The average concentration of a contaminant in air during a specific time period.

46. **Treatment** – Any method or process designed to change the physical, chemical or biological characteristics or the composition of any hazardous waste so as to render such waste non-hazardous.

47. **Treatment, Storage, and Disposal (TSD) Facility** – The TSD facility is the last phase of the cradle-to-grave concept in handling hazardous waste and is responsible for its proper stabilization and disposal. Requirements are found in 40 CFR 264 and 265.

48. **TSP** – Total Suspended Particulate. Term associated with the collection of airborne particulate using high volume ambient air samplers. TSP particles have a maximum aerodynamic diameter of about 100 micrometers. Filters are typically analyzed for lead.

49. **Waste Stream** – A waste stream represents debris of a similar type, make up, and process. The paint debris from a given structure represents a single waste stream if the coating system and method of removal is constant. The debris represents a different waste stream, if different coating materials or methods of removal are involved. For example, the waste created when using recycled steel grit generates a different waste stream than waste created using an expendable abrasive (e.g., coal slag) even though the paint being removed is the same. The waste stream consists of the abrasive material, removed paint particles and any other materials generated during the paint removal process.

50. **Worker Protection Plan** – Comprehensive plan addressing the steps that will be taken to protect the health and safety of Contractor workers from jobsite hazards.

51. **Ventilation System** – Ventilation systems include both natural ventilation and artificial ventilation (mechanical fans, hoods, and ductwork), to provide air movement across the work area, and dust collectors to clean the air stream prior to discharge to the atmosphere.

52. **Visible Emissions** – Emissions of particulate from the work area that are visible to the unaided eye. EPA methods for assessing visible emissions are found in 40 CFR 60, Appendix A. Method 9 determinations are based on the opacity of the emissions. Method 22 is based on total visible emissions regardless of the opacity.

END OF SECTION

APPENDIX C – NYSDOT SAFETY BULLETIN SB-94-4, HISTOPLASMOSIS

INTRODUCTION

Employees engaged in a variety of tasks are often required to work in areas where pigeons have nested, usually for long periods. Such conditions are often found in bridge structures and cold storage facilities. This nesting results in a substantial build-up of pigeon droppings, a condition which can be harmful to humans if the material is disturbed and made airborne.

Histoplasmosis is a fungal infection resulting from exposure to pigeon droppings. Infectious material enters the body usually by inhalation into the lungs, but in some cases by ingestion through the mouth into the gastrointestinal tract. Pigeons do not carry the organism that causes Histoplasmosis. Histoplasmosis is caused by a soil organism that requires the moist, nutrient rich environment that large masses of droppings offer. Areas with small amounts of dried droppings pose minimal hazard.

This Safety Bulletin is intended to alert employees of this potential health hazard and establish common sense precautions to minimize exposure.

PROCEDURES

Prior to work in any area where pigeons nest, a thorough inspection should be made to determine if, and to what extent there is a build-up of material. Inspection itself requires minimum precautions such as the use of personal protective equipment, which may include gloves, rubber boots, rain suit components, goggles and a dust/nuisance respirator. Questions regarding proper equipment for this activity should be directed to the Regional Safety Representative or Employee Safety & Health Section.

If substantial material is found in the immediate work area, cleaning must be performed. Employees engaged in cleaning activity shall wear all of the personal protective equipment specified above. A high powered water hose is an effective means to remove material. If the material is to be scraped away, it must be kept wet during the entire process. Application of a cleaning agent (bleach, for example), before removal may help dissolve the material, and may be applied as a disinfectant upon the affected surfaces after the droppings have been removed. Compressed air shall not be used to remove pigeon droppings because it increases the potential for inhalation and ingestion of airborne particles and the area of potential exposure.

When cleaning has been successfully completed, the personal protective equipment specified above is no longer required. All other personal protective equipment appropriate for the task and/or location shall be used, such as fall protection, hard hat, etc.

Employees engaged in cleaning, or any other activity which involves exposure to pigeon droppings, should observe a high degree of personal hygiene, even if the exposure is casual.

Special care must be taken to wash hands thoroughly before eating or smoking.

HISTOPLASMOSIS (NYS DOT Code: SB-94-4, Date: 1/21/94), Last Update: April 20, 1999

END OF SECTION

APPENDIX D – TABLES

Table 1
Containment Criteria for Removal of Paint Containing Lead and Other Toxic Metals[1]

Paint Removal Method	Containment SSPC Class[2]	Containment Material Flexibility	Containment Material Penetrability[3]	Support Structure	Material Joints	Containment Entryway	Ventilation System Required	Negative Pressure Required	Exhaust Filtration Required
Hand Tool Cleaning	3P	Rigid or Flexible	Air Penetrable	Minimal	Partially Sealed	Open Seam	Natural	Not Reqd	Not Reqd
Power Tool Cleaning w/ Vacuum	3P	Rigid or Flexible	Air Penetrable	Minimal	Partially Sealed	Open Seam	Natural	Not Reqd	Not Reqd
Power Tool Cleaning w/o Vacuum	1P	Rigid or Flexible	Air Penetrable or Air Impenetrable	Rigid or Flexible	Fully Sealed	Resealable	Mechanical	Required	Required
Chemical[4] Stripping Hand Removal	3C	Rigid or Flexible	Chemical Resistant	Minimal	Partially Sealed	Open Seam	Natural	Not Reqd	Not Reqd
Chemical[4] Stripping Wet Removal	2C	Rigid or Flexible	Chemical and Water Impermeable	Rigid or Flexible	Fully Sealed	Overlapping	Natural	Not Reqd	Not Reqd
Water Methods[5]	2W	Rigid or Flexible	Water Impermeable	Rigid or Flexible	Fully Sealed	Overlapping	Natural	Not Reqd	Not Reqd
Vacuum Blasting	4A	Rigid or Flexible	Air Penetrable or Air Impenetrable	Minimal	Partially Sealed	Open Seam	Natural	Not Reqd	Not Reqd
Wet Abrasive Blasting[6]	1W	Rigid or Flexible	Air Impenetrable & Water Impermeable	Rigid or Flexible	Fully Sealed	Resealable	Mechanical	Required	Required
Abrasive Blast Cleaning[7]	1A	Rigid or Flexible	Air Impenetrable	Rigid or Flexible	Fully Sealed	Airlock or Resealable	Mechanical	Required	Required

[1] This table provides general design criteria only. Other combinations of materials may provide controls over emissions equivalent to those combinations shown above.

[2] The SSPC Classification is based on SSPC Guide 6. Note that for work over water, water booms or boats with skimmers should be employed, where feasible, to contain spills or releases. Debris must be removed daily at a minimum.

[3] Permeability addresses both air penetrability and water permeability as appropriate. In the case of water or chemical removal methods, the containment materials must be resistant to both chemicals and water. Ground covers should always be impermeable, and of sufficient strength to withstand the impact and weight of the debris and the equipment used for collection and cleanup.

[4] Ground covers must always be impermeable and of sufficient strength to withstand the weight and impact of the debris and the equipment used for cleaning. When tarpaulins are used, install plywood above or below the tarpaulins as necessary to prevent perforation. If debris escape through the seams, then additional sealing of the seams and joints is required. All containment materials and materials used for sealing must be resistant to both chemicals and water. If unacceptable worker exposures to lead or other toxic metals occurs, incorporate a ventilation system.

[5] This method applies to high pressure water jetting without abrasives. Ground covers and the lower portions of the containment must be of sufficient strength and integrity to facilitate the collection and holding of the water and debris for proper disposal. Ventilation is not required provided the emissions are controlled as specified in this Section and provided worker exposures are properly controlled. If unacceptable worker exposures to lead or other toxic metals occurs, incorporate a ventilation system into the containment.

[6] This method applies to any methods which combine water with abrasives. Ground covers and the lower portions of the containment must be of sufficient strength and integrity to facilitate the collection and holding of the water and abrasive/paint debris for proper disposal.

[7] Ground covers must be of sufficient strength to withstand the impact and weight of the abrasive and the equipment used for cleaning. Ground covers must also extend beyond the containment boundary to capture escaping debris.

NO TEXT ON THIS PAGE

BUILDINGS - PAGES

BUILDINGS SPECIFICATIONS

CONTRACT SANDRESM1

The specifications in the BUILDINGS-Pages cover furnishing all building components and assemblies, equipment (including lighting, plumbing, HVAC, furnishings and associated works), superintendence, labor, skill, material and all other items necessary for the construction, installation, start-up and testing of the work at the Tennis House Building, Track and Field Building, East 10th Comfort Station, Maintenance and Operations (M&O) Area 2 Building, M&O Area 3 Building, M&O Area 1 Canopy, and M&O Area 2 Canopy as part of the East Side Coastal Resiliency Project.

The BUILDINGS-Pages supplement the specifications shown on the Specifications and Standards of New York City sheet at the beginning of this Volume 3, which apply to the work except as modified in these Contract Documents.

(NO TEXT ON THIS PAGE)

TABLE OF CONTENTS

Section	Description	Page No.
Section 01 11 00 – Summary of Work		1
Section 03 33 00 / ESCR-13 – Architectural Concrete Textured Finishes		9
Section 04 20 00 – Unit Masonry		10
Section 05 50 00 – Metal Fabrications		33
Section 05 80 00 – Architectural Formed Metals		48
Section 06 15 00 – Rough Carpentry		59
Section 07 13 00 – Sheet Waterproofing		67
Section 07 23 00 – Building Insulation		74
Section 07 27 10 – Air Vapor Barrier		80
Section 07 55 56 – Fluid Applied Membrane Roofing		91
Section 07 55 66 – Vegetated Fluid Applied Protected Membrane Roofing		104
Section 07 62 00 – Sheet Metal Flashing and Trim		126
Section 07 70 00 – Roof and Wall Specialties and Accessories		133
Section 07 84 00 – Firestopping		145
Section 07 92 00 – Joint Sealants		158
Section 08 31 00 – Access Doors and Panels		172
Section 08 33 00 – Hollow Metal Doors and Frames		180
Section 08 33 23 – Overhead Coiling Doors		194
Section 08 51 13 – Aluminum Windows		205
Section 08 71 00 – Finish Hardware		221
Section 08 80 00 – Glazing		232
Section 09 21 17 – Gypsum Board Systems		251
Section 09 67 00 – Fluid Applied Flooring		261
Section 09 90 00 – Paints and Coatings		267
Section 10 14 00 – Signage		283
Section 10 16 00 – Toilet Compartments		292
Section 10 28 13 – Toilet Accessories		300
Section 10 44 00 – Fire Extinguishers and Accessories		306
Section 10 51 13 – Metal Lockers and Accessories		313
Section 13 34 70 – Fabricated Concrete Buildings		321
Section 21 13 00 – Sprinkler System		333
Section 28 46 00 – Fire Detection and Alarm System with Central STATION Connection		347
Section 22 05 00 – Common Work Results for Plumbing		366
Section 22 05 16 – Expansion Joints and Loops for Plumbing Piping		372
Section 22 05 17 – Sleeves and Sleeve Seals for Plumbing Piping		374
Section 22 05 18 – Escutcheons for Plumbing Piping		378
Section 22 05 19 – Meters and Gages for Plumbing Piping		380
Section 22 05 23 – General Duty Valves for Plumbing Piping		386
Section 22 05 29 – Hangers and Supports for Plumbing Piping and Equipment		401

Section 22 05 53 – Identification for Plumbing Piping and Equipment 412
Section 22 07 19 – Plumbing Piping Insulation 417
Section 22 11 16 – Domestic Water Piping 434
Section 22 11 19 – Domestic Water Piping Specialties 445
Section 22 13 16 – Sanitary Waste and Vent Piping 453
Section 22 13 19 – Sanitary Waste Piping Specialties 467
Section 22 14 13 – Facility Storm Drainage Piping 475
Section 22 14 23 – Storm Drainage Piping Specialties 479
Section 22 16 16 – Natural Gas Piping 484
Section 22 33 33 – Instantaneous Electric, Domestic Water Heaters 492
Section 22 42 13.13 – Commercial Water Closet and Urinal 496
Section 22 42 13.16 – Commercial Water Closet and Urinal 502
Section 22 42 16.13 – Commercial Lavatories 507
Section 22 42 16.16 – Commercial Sinks 511
Section 22 45 00 – Products – Emergency Plumbing Fixtures 515
Section 22 47 13 – Drinking Fountains 519
Section 23 0529 – Hangers and Supports For HVAC Piping and Equipment 521
Section 23 0553 – Identification for HVAC Piping and Equipment 532
Section 23 0593 – Testing, Adjusting and Balancing 537
Section 23 0713 – Duct Insulation 551
Section 23 3113 – Metal Ducts 567
Section 23 3300 – Air Duct Accessories 583
Section 23 3423 – HVAC Power Ventilators 596
Section 23 3713 – Diffusers, Registers and Grilles 604
Section 232000 – HVAC Piping 608
Section 23 55 13 – Furnaces 614
Section 238113 – Air Conditioners 616
Section 26 0519 – Low-Voltage Electrical Power Conductors and Cables 621
Section 26 0526 – Grounding and Bonding for Electrical Systems 633
Section 26 05 29 – Hangers and Supports for Electrical Systems 635
Section 26 0533 – Raceway and Boxes for Electrical Systems 646
Section 26 0553 – Identification for Electrical Systems 654
Section 26 0923 – Lighting Control Devices 660
Section 26 2416 – Panelboards 661
Section 26 2726 – Wiring Devices 666
Section 26 5119 – Led Interior Lighting 672
Section 26 53 00 – Exit Light Fixtures 674
Section 32 31 10 – Fences and Gates 675

SECTION 01 11 00 – SUMMARY OF WORK

PART 1 - GENERAL

1.1 SUMMARY

A. General: This Section specifies a Summary of Work to be performed in accordance with the requirements of the Contract Documents and the items of work shown on the Contract Drawings listed in PART 4 - Appendix attached at the end of this section. The work consists of furnishing all building components and assemblies, equipment, superintendence, labor, skill, material and all other items necessary for the construction, installation, start-up and testing of the work as part of the East Side Coastal Resiliency Project.

1. The work shall include
    a. Tennis House Building,
    b. Track and Field Building,
    c. East 10th Comfort Station,
    d. Maintenance and Operations (M&O) Area 2 Building,
    e. M&O Area 3 Building,
    f. M&O Area 1 Canopy, and
    g. M&O Area 2 Canopy.

B. This Section Includes:

1. Related Sections.
2. Location and Description of Work.
3. Work Included in the Contract.

1.2 RELATED SECTIONS

A. All Contract Documents, including all other specifications sections in this Contract, will apply to this Section.

B. Specifications sections related to the items of work covered under this Contract are organized into the following Sections:

C. SPECIAL WORKS SECTIONS cover requirements related to the complete furnishing, construction, installation, startup, and testing of the work. The SPECIAL WORKS SECTIONS include all Sections within these BUILDINGS-Pages.

1.3 REFERENCES

A. Abbreviations / Acronyms: No new references are used in this Section.

B. Definitions: No new references are used in this Section.

C. Reference Standards: No new references are used in this Section.

1.4 WORK INCLUDED IN THE CONTRACT

A. Location: The site of the work performed under this Contract takes place within the East Side Coastal Resiliency Project, generally from Montgomery St. in the

south to 24th St in the north from the FDR Drive to Avenue C. The full extent of the site and work is shown on the drawings.

B. Items of Work: The work covered in this and all related sections include, but is not limited to, providing all building components and assemblies, equipment, superintendence, labor, skill, material and all other items necessary for the construction, installation, start-up and testing necessary to complete this work and do all work incidental thereto, all in accordance with the plans and specifications, and as directed by the City.

1. Additionally, included items of work hereunder shall be the installation and testing of equipment used in the operation of the work in accordance with the plans, specifications and standards, and as directed by the City.

C. Description of Work as follows:

1. Tennis House Building

a. The Tennis House Building is an approximately 1,500 SF single story building consisting of Public Restrooms, Tennis and M&O offices, a small Concession space with a sales window, Park Storage, and Mechanical Room. The exterior of the building will be constructed of an insulated CMU block wall system with a multi-colored glazed brick finish. The exterior openings for this project will be stainless steel doors and aluminum frame windows covered by perforated metal panels. The interior finishes of the occupied spaces will be glazed brick wall tiles or painted CMU with painted steel doors and frames. The roof will be an insulated, extensive vegetated fluid- applied roof system. The full extent of the work is as shown on the drawings.

b. Mechanical, electrical and plumbing (MEP) work including electric heating, ventilation fans with motorized dampers/louvers, water service and distribution piping, valves, slop sink, winterizable exterior hose bib, floor drains, drainage piping and house trap, electrical panel, lighting fixtures, occupancy sensors, receptacles, GFCI receptacles, conduit, wire, pull/junction boxes, supports, etc. for complete installation with testing, instruction, operations and maintenance manuals and as-built drawings.

c. Foundation requirements for the Tennis House Building are as described in the Contract Plans S-600 series.

2. Track and Field Building

a. The Track and Field Building is an approximately 5,400 SF single story building consisting of Public Restrooms, Public Locker Rooms, a Concession space with sales windows, Vendor Storage Room, Track Office with Staff Locker Rooms and Restrooms, Park Storage Rooms, and Mechanical Room. The exterior of the building will be constructed of an insulated CMU block wall system with a multi-colored glazed brick finish. The

exterior openings for this project will be stainless steel doors and aluminum frame windows covered by perforated metal panels. The interior finishes of the occupied spaces will be glazed brick wall tiles or painted CMU with painted steel doors and frames. The roof will be an insulated, extensive vegetated fluid- applied roof system. The full extent of the building is as shown on the drawings.

b. Mechanical, electrical and plumbing (MEP) work including electric heating, ventilation fans with motorized dampers/louvers, water service and distribution piping, valves, slop sink, winterizable exterior hose bib, floor drains, drainage piping and house trap, electrical panel, lighting fixtures, occupancy sensors, receptacles, GFCI receptacles, conduit, wire, pull/junction boxes, supports, etc. for complete installation with testing, instruction, operations and maintenance manuals and as-built drawings.

c. Foundation requirements for the Track and Field Building are as described in the Contract Plans S-500 series.

3. East 10th Street Comfort Station

a. The Comfort Station is an approximately 750 SF single story building consisting of Public Restrooms and a Mechanical Room. The exterior of the building will be constructed of an insulated CMU block wall system with a multi-colored glazed brick finish. The exterior openings for this project will be stainless steel doors and aluminum frame windows covered by perforated metal panels. The interior finish of the Restrooms will be glazed brick wall tiles with painted steel doors and frames. The roof will be an insulated, fluid-applied roof system. The full extent of the building is as shown on the drawings.

b. Mechanical, electrical and plumbing (MEP) work including electric heating, ventilation fans with motorized dampers/louvers, water service and distribution piping, valves, slop sink, winterizable exterior hose bib, floor drains, drainage piping and house trap, electrical panel, lighting fixtures, occupancy sensors, receptacles, GFCI receptacles, conduit, wire, pull/junction boxes, supports, etc. for complete installation with testing, instruction, operations and maintenance manuals and as-built drawings.

c. Foundation requirements for the E 10th Street Comfort Station are as described in the Contract Plans S-700 series.

4. M&O Area 2 Building

a. The M&O Area 2 Building is an approximately 968 SF single story prefabricated structure as a storage room with a utility sink. The exterior of the building will be constructed of an insulated precast concrete panel with custom form liner pattern. The exterior openings for this project will be stainless steel doors with two motorized garage doors. The roof will be an insulated, fluid-

applied roof system. The full extent of the building is as shown on the drawings.

b. Mechanical, electrical and plumbing (MEP) work including electric heating, ventilation fans with motorized dampers/louvers, water service and distribution piping, valves, slop sink, winterizable exterior hose bib, floor drains, drainage piping and house trap, electrical panel, lighting fixtures, occupancy sensors, receptacles, GFCI receptacles, conduit, wire, pull/junction boxes, supports, etc. for complete installation with testing, instruction, operations and maintenance manuals and as-built drawings.

c. Foundation requirements for the M&O Area 2 Building are as described in the Contract Plans S-300 series.

5. M&O Area 3 Building

a. The M&O Area 3 Building is an approximately 968 SF single story prefabricated structure as a storage room with a slop sink. The exterior of the building will be constructed of an insulated precast concrete panel with custom form liner pattern. The exterior openings for this project will be stainless steel doors with two motorized garage doors. The roof will be an insulated, fluid-applied roof system. The full extent of the building is as shown on the drawings.

b. Mechanical, electrical and plumbing (MEP) work including electric heating, ventilation fans with motorized dampers/louvers, water service and distribution piping, valves, slop sink, winterizable exterior hose bib, floor drains, drainage piping and house trap, electrical panel, lighting fixtures, occupancy sensors, receptacles, GFCI receptacles, conduit, wire, pull/junction boxes, supports, etc. for complete installation with testing, instruction, operations and maintenance manuals and as-built drawings.

c. Foundation requirements for the M&O Area 3 Building are as described in the Contract Plans S-400 series.

6. M&O Area 1 Canopy

a. The M&O Area 1 Canopy is an approximately 840 SF freestanding structure supported by two columns. The structural steel framing is clad with stainless steel panels.

b. Lighting on/within underside of canopy with associated conduit, wire, pull/junction boxes, supports, etc. for complete installation with testing, instruction and as-built drawings.

7. M&O Area 2 Canopy

a. The M&O Area 2 Canopy is an approximately 1,560 SF freestanding structure supported by four columns. The structural steel framing is clad with stainless steel panels.

b. Lighting on/within underside of canopy with associated conduit,

wire, pull/junction boxes, supports, etc. for complete installation with testing, instruction and as-built drawings.

8. M+O Fuel Storage Cabinet

The M+O Fuel Storage Cabinets are pre-fabricated 90 gal capacity (69”Hx43”Wx31”D) 2shelf, self latched 2 door fuel cabinets as indicated on the contract plans.

9. Fencing and gates

a. M&O Areas 1, 2 and 3 are secured by painted, hot-dipped galvanized slatted fence panels mounted to posts on concrete foundations or retaining walls.

b. Access points will be equipped with rolling gates or double swing gates. The gates receive slatted panels to match the adjacent fence. The gates are painted, hot-dipped galvanized.

1.5 BUILDING PERMITS AND SPECIAL INSPECTIONS

A. The Contractor shall secure and pay for the building permit and other permits and governmental fees, and licenses necessary for execution and completion of the Work. Reference Article B14, “Special Inspection and Department of Buildings” in the S-Pages for additional requirements.

B. The Special Inspection requirements as indicated on the General Notes sheet of each project discipline. See General Notes sheets including but are not limited to the following:

1. Structural General Notes (KSE) – Sheet S-101.00
2. Structural General Notes (Arcadis) – Sheet S800
3. Mechanical General Notes (WCA) – Sheet M401

PART 2 - PRODUCTS

(NOT APPLICABLE)

PART 3 - EXECUTION

The requirements of this Section apply only to the work covered in these BUILDING-Pages.

3.1 GUARANTEES

(a) Contractor’s Guaranty Obligation: The Contractor shall promptly repair, replace, restore or rebuild, as the Commissioner may determine, any finished Work in which defects of materials or workmanship may appear or to which damage may occur because of such defects, during the one (1) year period subsequent to the date of Substantial Completion (or use and occupancy in accordance with the Contract), except for the areas of Work set forth below:

- Roofing, Waterproofing, and Joint Sealant Work. For these types of work, the guarantee period shall be (2) two years.
- Trees and/or Plant Material. For trees and/or plant material furnished and installed, the guarantee period shall be (2) two years. During the guarantee period, the Contractor shall provide all maintenance services set forth in the

Specifications.

(b) Guaranty Period: The obligation of the Contractor, and its Surety under the Performance Bond, is limited to the period(s) of time specified above.

(c) Other Provisions Deemed Deleted: In the event the Specifications and/or the Contract Drawings contain any provisions regarding guaranty requirements, such provisions are deemed deleted and replaced with the guaranty requirements set forth in this Schedule B.

3.2 WARRANTIES

Requirements for Warranties are set forth in the following table.

(a) The term "manufacturer's warranty" as described in this article encompasses the following terms as indicated in the Specifications: "Manufacturer's Warranty", "Manufacturer's Special Warranty", "Special Warranty", "Special Finish Warranty", "Manufacturer's Special Warranty for a (product, assembly).

(b) In the event of any conflict or inconsistency between (1) a warranty requirement set forth in the Specifications and/or the Contract Drawings and (2) a warranty requirement set forth in in the table below, the warranty requirement set forth in the table below will prevail.

(c) **Contractor's Obligation to Provide Warranties:** The items of material and/or equipment for which manufacturer warranties are required are listed below. For each item of material and/or equipment listed below, the Contractor shall obtain a written warranty from the manufacturer. Such warranty shall provide that the material or equipment is free from defects for the period set forth below and will be replaced or repaired within such specified period. The Contractor shall deliver all required warranties to the Commissioner.

(d) **Application:** The obligations under the warranty for the periods specified below shall apply only to the manufacturer of the material or equipment, and not to the Contractor or its Surety; provided, however, the Contractor retains responsibility for obtaining all required warranties from the manufacturers and delivering the same to the Commissioner.

(e) **Other Provisions:** The warranty requirements set forth in the table below are also included in the Specifications.

(1) In the event a warranty requirement set forth in the Specifications is omitted from the table below, such omission from the table below will have no effect and the Contractor's obligation to provide the manufacturer's warranty, as set forth in the Specifications, will remain in full force and effect.

(2) In the event a warranty requirement for a particular item of material or equipment is omitted from both the table below and the Specifications, and the manufacturer of such item actually provides a warranty, the Contractor shall be obligated to obtain and deliver to the Commissioner the highest level of warranty actually provided by that manufacturer.

(3) In the event a warranty requirement is provided for a particular item of material or equipment, and such requirement specifies a warranty period that is longer than that which is actually provided by any of the specified manufacturers, the Contractor shall be obligated to obtain and deliver to

the Commissioner the highest level of warranty actually provided by any of the specified manufacturers, unless otherwise directed in writing by the Commissioner.

(4) Unless indicated otherwise Warranties are to take effect on the date of Substantial Completion or use prior to completion per Article 16 of the Standard Construction Contract.

Section	Material or Equipment	Warranty Period
211300	Sprinkler System	1 Year
223333	Instantaneous Electric, Domestic Water Heaters	1 Year
233423	HVAC Power Ventilators	1 Year
238113	Air Conditioners	1 Year
260923	Lighting Control Devices	1 Year
262416	Panelboards	1 Year
265119	LED Interior Lighting	1 Year
265300	Exit Light Fixtures	1 Year
284600	Fire Detection and Alarm System	1 Year

PART 4 – EXECUTION

4.1 MEASUREMENT AND PAYMENT

The contractor shall be paid the lump sum price bid for completing all the work required to be done per the contract drawings and specifications, to the satisfaction of the Engineer. For M&O Area 2 Building and M&O Area 3 Building the contractor shall be paid the lump sum price under PK-ESCR 049 M+O Pre-Fabricated Building. For M+O Fuel Storage Cabinet, the contractor shall be paid for EACH cabinet furnished and installed.

For furnishing and installing Steel Slat Double Swing Gate, 8'HT, 35'W, Steel Slat Double Swing Gate, 8'-0"HT, 15'-0"W and Steel Slat Rolling Gate 8"-0"HT, 25'W in accordance with the plans, specifications and direction of the Engineer, the Contractor shall receive the unit bid price.

The quantity of Steel Slat Privacy Fence M&O to be paid for shall be the number of LINEAR FEET furnished and installed in accordance with the plans, specifications and direction of the Engineer.

4.2 PAYMENT

The contract price for all items listed below shall cover the cost to provide all labor, material, plant, equipment, insurance and incidentals required for the complete installation. The contract price shall cover all work including but not limited to concrete, reinforcing steel, masonry , metals, wood, plastic and composites, thermal and moisture protection openings, finishes, specialties, equipment, furnishings, special construction, fire suppression, plumbing, heating, ventilation and air conditioning (HVAC), controls, electrical, communications, fore alarm systems all together with necessary incidentals as required in full compliance with the contract documents, the specifications and the direction of the Engineer. The lump sum items shall include cost for all filings, expediting, coordination, fees and compliance with all agencies and utilities service requirements including but not limited to NYC Department of Buildings (DOB), NYC Small Business Services (SBS), NYC Department of Environmental Protection (DEP),

Con-Edison, OSHA, etc. as required. The lump sum process shall cover all work to five feet outside of structures and include flexible utility connections. The lump sum price includes foundation pile work and foundations as shown on the contract plans.

Payment will be made under the following items:

Item No.	Item	Pay Unit
PK-ESCR 049	M+O Pre Fabricated Building	LUMP SUM
PK-ESCR 051	M+O Fuel Storage Cabinet	EA
PK-ESCR 50A	M+O Canopy Structure, Area 1	LUMP SUM
PK-ESCR 50B	M+O Canopy Structure, Area 2	LUMP SUM
PK-ESCR 501	Tennis Building	LUMP SUM
PK-ESCR 502	Track Building	LUMP SUM
PK-ESCR 503	10th Street Comfort Station	LUMP SUM
PK-ESCR 032	Steel Slat Double Swing Gate, 8′HT, 35′ W	EA
PK-ESCR 200	Steel Slat Rolling Gate, 8′-0″HT, 25′ W	EA
PK-ESCR 905	Steel Slat Double Swing Gate, 8′-0″ HT, 15′-0″W	EA
PK-ESCR 947	Steel Slat Privacy Fence M&O	LF

END OF SECTION

SECTION 03 33 00 / ESCR-13 – ARCHITECTURAL CONCRETE TEXTURED FINISHES

A. See FLOODWALL-Pages for Section ESCR 13, which applies to the Architectural Concrete Textured Finishes work covered in the BUILDINGS-Pages and the following:

B. **Mock-up for Formed Concrete Work:** After all samples, product data, and the shop drawings for the Mock-up are approved, construct mock-ups of the architectural concrete textured finish work in a location approved by the Engineer and as described below. Mock-ups and mock-up submissions for the concrete work shall consist of the following:

1. Mock-ups shall be as detailed.
2. Prepare and submit a “Lessons Learned” report after completion of each mock-up for review and discussion with the Project Team.
3. Additional mock-ups or partial mock-ups shall be required if the above mock-ups are deficient in producing the quality required for the project.
4. Mock-ups shall consist of the following:
   a. Foundation of a size and reinforcement adequate to support the work at the designated location.
      - Scope of Visual Mock-up**:** Wall section using form liner weave ribbon pattern: full height, and full thickness, and 8-foot-long straight section with form liner seams, and typical joints in the project.
      - Apply anti-graffiti protection coating (ITEM 559.90010011) over Penetrating Type Protective Sealer according to manufacturer’s instruction in an area approved by Engineer.
   b. Reinforce as in a similar detail on the drawings and add necessary reinforcing and/or supports to maintain stability.
   c. Use approved form facing materials, reinforcement and accessories and assemble formwork using methods as intended for construction and to achieve the specified requirements.
   d. Place concrete with methods to be used in construction, including anticipated time delays between placements. Place concrete to achieve the specified requirements.
   e. Use approved concrete design mixes, inclusive of specified admixtures, for the mock-ups as will be used in the construction of the formed surfaces.

C. If mock-ups do not meet the specified quality and are not approved, remove and replace in full or in part at no additional cost. Mock-ups shall be located so they will remain throughout construction. Protect mock-up from damage. Remove mock-up only when directed by the Engineer.

END OF SECTION

SECTION 04 20 00 – UNIT MASONRY

PART 1 - GENERAL

1.1 SUMMARY

A. General: Provide masonry units, ceramic glazed masonry units, and ceramic glazed thin brick units in accordance with requirements of the Contract Documents.

B. Related Work Specified Elsewhere

1. Miscellaneous steel lintels, relieving angles, other support steel and accessories for masonry units are specified in Section 05 50 00 "Metal Fabrications" and installed under this Section.
2. Air vapor barrier as specified in Section 07 27 10 “Air Vapor Barrier”.
3. Insulation as specified in Section 07 21 00 "Building Insulation”.
4. Sheet metal flashing and trim is specified in Section 07 62 00 "Sheet Metal Flashing and Trim".
5. Sealants and joint fillers are specified in Section 07 92 50 "Joint Sealants".
6. Steel doors, windows and frames is furnished under Section 08 11 00 “Hollow Metal Doors and Frames” and installed under this Section.

1.2 SYSTEM DESCRIPTION

A. Performance Requirements: For information only. Reinforcing bar schedule and locations are shown on the drawings.

1. Load and Deflection Criteria (Interior):
   a. Construct interior unit masonry walls to withstand a lateral loading of minimum 5 psf positive and negative pressure, except where more stringent requirements are indicated.
2. Load and Deflection Criteria (Exterior):
   a. Structural requirements shall be as indicated on the Contract Drawings.
3. Freeze-Thaw Criteria:
   a. For surface-coated brick, include test report for durability of surface appearance after 50 cycles of freezing and thawing according to ASTM C 67 or a list of addresses of buildings in Project's area where proposed brick has been used successfully and with a history of durability.
4. Anti-Graffiti Coating Performance Requirements:
   a. Solvent: water-borne.
   b. VOC Content: EPA Method 25 -- less than 25 grams per liter.

c. Graffiti Removal: ASTM D6578 “Standard Practice for Determination of Graffiti Resistance” Non-sacrificial minimum of Level 3 cleaning

d. Water Vapor Permeability: ASTM D1652 – minimum 95% breathable.

e. Surface Appearance: No appreciable difference compared to non- coated surface.

f. Weathering: 1000 hours in QUV – no change in repellency

g. Fire Propagation Test: negative

h. Surface Spread of Flame: Class 1, no spread of flame

i. Toxic Fume Summation During Combustion: None

1.3 REFERENCES

A. General: Comply with the applicable provisions and recommendations of the referenced standards except as modified by governing codes and by the Contract Documents. Where a recommendation or suggestion occurs in the referenced standards, such recommendation or suggestion shall be considered mandatory. In the event of conflict between referenced standards, this specification or within themselves, the more stringent standard or requirement shall govern.

1. American Concrete Institute (ACI): ACI 530.1/ASCE 6/TMS 602 "Specifications for Masonry Structures".

2. American Concrete Institute (ACI): ACI 216.1/TMS 216 “Code Requirements for Determining Fire Resistance of Concrete and Masonry Construction Assemblies”.

3. National Concrete Masonry Association (NCMA): "TEK" Information Series”:

4. American Society for Testing and Materials (ASTM):

   a. ASTM C1586 “Standard Guide for Quality Assurance of Mortars”.

   b. ASTM D6578 “Standard Practice for Determination of Graffiti Resistance”

5. New York City Building Code.

6. Industrial Fasteners Institute (IFC)

   a. "Fastener Standards Book".

7. Ceramic Glazed Masonry Institute (CGMI)

1.4 SUBMITTALS

A. Product Data: Submit manufacturer’s literature and specifications describing the general properties of each material and accessory to be used in the Work. Provide complete product data for the "anti-graffiti" coating.

B. Shop Drawings: Submit shop drawings for the fabrication and installation of the Work. Prepare details at not less than 3 in. = 1 ft.-0 in. minimum scale.

1. Submit shop drawings for fabrication, bending and placement of reinforcement bars and details for reinforced masonry. Comply with ACI 315 "Details and Detailing of Concrete Reinforcing". Submit bar schedules, stirrup spacing, bending diagrams for bars and arrangement of masonry reinforcement. Shop drawings shall bear the seal of a Professional Engineer licensed in the State of New York.

2. Submit shop drawings for corner blocks and other special shapes.

C. Samples: Label samples to indicate product, characteristics, and location in the Work. Samples will be reviewed for color and appearance only. Furnish sufficient samples to establish the full range of colors and textures for materials exposed in the finished Work. Compliance with other requirements is the responsibility of the Contractor.

1. Sample Block: Provide (2) full size samples of each type, color and texture of exposed face blocks.

2. Provide (2) 12 in. long colored masonry mortar samples of each color and type demonstrating match with block specified.

3. Provide (2) 24 in. sq. samples of each type precast unit.

4. Anti-Graffiti Coatings: Coat half of each sample block with the anti-graffiti coating as specified herein.

D. List of Materials Used in Constructing Mockups: Submit a list of generic product names together with manufacturers, manufacturers' product names, model numbers, lot numbers, batch numbers, source of supply, and other information as required to identify materials used. Include mix proportions for mortar and grout and source of aggregates. Submittal is for information only. Neither receipt of list nor approval of mockup constitutes approval of deviations from the Contract Documents, unless such deviations are specifically approved in writing.

E. Quality Control Submittals: Submit the following:

1. Test Reports:

a. Preconstruction and field test reports for mortar indicating conformance of mortar materials to property specifications of ASTM C270.

b. Test reports, per ASTM C780, for mortar mixes required to comply with property specification.

c. Preconstruction and field test reports of grout in conformance with ASTM C1019.

d. Certified test reports indicating compliance with requirements for the "anti-graffiti" coating. In addition, provide manufacturer's field reports for "anti-graffiti" coating.

2. Certificates:

a. Document Review: Before commencing work, submit a written statement signed by the Contractor and the Applicator certifying that the Contract Documents, shop drawings and product data have been reviewed with material manufacturers' qualified technical representatives and that they agree the selected materials are proper, compatible with contiguous materials and adequate for the application shown.

1) Submit concrete masonry unit(s) producer's certificates, from an independent testing laboratory, stating concrete masonry units comply with International Building Code fire resistance rating requirements for two (2) hour or better (as required) referencing full scale fire test reports in conformance with ASTM E119.

2) Submit producer's certification that the concrete masonry units oven dry density is less than 90 pcf and that the type aggregate utilized in the production of the concrete masonry units are 100% lightweight aggregate.

b. Mill Certificates: Submit steel producer's certificates of mill analysis, tensile and bend tests for reinforcement steel.

3. Procedures: Submit, for Engineer's information, hot and cold-weather construction procedures evidencing compliance with requirements specified in referenced unit masonry standard ACI 530.1/ASCE 6 "Specifications for Masonry Structures".

F. Closeout Submittals: Submit the following:

1. Warranties: Special warranties as specified.

2. Maintenance Data: Two (2) copies of an assembled and bound maintenance manual, describing the materials and procedures to be followed in cleaning and maintaining the "anti-graffiti" coating. Include manufacturer's brochures describing the actual materials used in the work.

1.5 QUALITY ASSURANCE

A. Contractor's Testing Agency Qualifications: An independent testing agency, acceptable to the Engineer, and qualified according to ASTM C1093 to conduct the testing indicated, as documented according to ASTM E548.

B. Single Source Responsibility:

1. Single Source Responsibility for CMU: Obtain exposed masonry units from one source of a single manufacturer. Obtain accessory products used in conjunction with masonry units from the Masonry Units manufacturer or from sources acceptable to the

manufacturer. The manufacturer providing material or equipment specified in this section must, for the past five (5) years, have been regularly engaged in the manufacture of material or equipment similar in type to that required for this Project. Such material or equipment provided by the manufacturer must have been in satisfactory service for not less than five (5) years.

2. Single Source Responsibility Anti-Graffiti Coating: Obtain anti-graffiti coating from one source of a single manufacturer for the entire project. Obtain accessory products used in conjunction with anti-graffiti coating from the anti- graffiti coating manufacturer or from sources acceptable to the manufacturer. The anti-graffiti coating manufacturer must, for the past five (5) years, have been regularly engaged in the manufacture of material or equipment similar in type to that required for this Project. Such material or equipment provided by the manufacturer must have been in satisfactory service for not less than five (5) years.

C. Regulatory Requirements: Comply with applicable requirements of the laws, codes, ordinances and regulations of Federal, State and Municipal authorities. Obtain necessary approvals from the NYC Building Department.

1. Concrete masonry units fire resistance ratings shall be determined using either prescriptive details and tables found in IBC Section 720 or calculations found in IBC Section 721. The technical content of these provisions corresponds to the provisions of “Code Requirements for Determining Fire Resistance of Concrete and Masonry Construction Assemblies, ACI 216.1/TMS 216”.

2. Requirements for fire–rated or lateral support conditions are not necessarily fully defined on the Drawings or specified; comply with applicable regulations.

D. Qualified Applicator: The entity performing the anti-graffiti coating application work of this section must, within the last five (5) consecutive years prior to the bid opening have successfully completed in a timely fashion at least three (3) projects similar in scope, size and type to the required work.

E. Mock-Up(s):

1. Sample Wall:

a. Build sample wall(s) as detailed on contract documents. The Work of this Project shall be constructed on approval of workmanship, joint sizes, construction and control joints, vertical alignment, parapet conditions, window and door head and sills, flashing installation, window/door installation and CMU and mortar colors of the sample wall.

1) An initial 4 ft. x 4 ft. x full depth CMU veneer wall showing CMU (face and backup) and mortar specified shall be constructed before authorization to complete the sample wall.

b. Clean mock-ups with materials and techniques intended for use on the Project.

c. Apply "anti-graffiti" coating to mockup entire exterior face. Demonstrate "anti-graffiti qualities by utilizing 5 standard graffiti marking mediums and removing graffiti.

d. Obtain acceptance of visual qualities of each sample panel before proceeding with the final work.

F. Pre-Installation Meeting: Prior to the start of the Work, meet at the Project site to review methods and sequence of masonry construction, special masonry details and conditions, standard of work, testing and quality control requirements, job organization and other pertinent topics related to the Work.

1.6 DELIVERY, STORAGE AND HANDLING

A. Packing, Shipping, Handling, and Unloading: Deliver masonry materials, other than bulk materials to Project site in manufacturer's unopened containers, bundles, pallets or other standard packaging devices; fully identified with name, type, grade, color and size.

B. Storage and Protection: Store on platforms off the ground, in a dry location and protect from weather, soiling and damage. Store aggregates where grading and other required characteristics can be maintained and contamination avoided. Store masonry accessories including metal items to prevent corrosion and accumulation of dirt and oil.

C. Metal Materials: Do not use metal reinforcing, ties, or other components which are coated with loose rust or other deleterious matter that will reduce or destroy bond with mortar and grout.

1.7 PROJECT/SITE CONDITIONS

A. CMU Installation Requirements

1. Cold Weather Conditions: Do not erect masonry when the temperature is below 40 deg. F. unless provisions for heating and drying the materials and protecting the completed work comply with the requirements specified in Paragraph 2.3.2.2 of ACI 530.1/ASCE 6 "Specifications for Masonry Structures". Do not build upon frozen work. Do not lay masonry units having a film of water or frost on their surfaces.

2. Hot Weather Conditions: Do not erect masonry when the temperature is above 100 deg. F. or 90 deg. F with a wind velocity greater than 8 mph to comply with the requirements specified Paragraph 2.3.2.3 of ACI 530.1/ASCE 6 "Specifications for Masonry Structures".

B. "Anti-Graffiti" Coating Application Conditions: Maintain ambient temperature above 40 degrees F during and 24 hours after installation. Do not proceed with application on materials if ice or frost is covering the substrate. Do not proceed with application if ambient temperature of surface exceeds 100 degree F. Do not proceed with the application of

materials in rainy conditions or if heavy rain is anticipated within 4 hours after application.

PART 2 – PRODUCTS

2.1 MANUFACTURER

A. Standard Concrete Unit (**CMU-01**) Masonry Manufacturers:

1. Oldcastle/Echelon Masonry shall be the basis of design but is not intended to imply a preference for a specific product.
2. Other manufacturers making equivalent products to be considered may include the following:
   a. Westbrook Concrete Block.
   b. A. Jandris & Sons.
   c. York Building Products.
   d. Nitterhouse Masonry Products.
   e. Or approved equal.

B. Ceramic Glazed Masonry Units (**BRK-01**) and Ceramic Glazed Thin Brick Units (**BRK-02**) Manufacturers:

1. Elgin Butler Company. No substitutions allowed.

2.2 UNIT MASONRY MATERIALS

A. Standard Concrete Masonry Units (**CMU-01**): ASTM C90, Type I Moisture Controlled Units, modified as follows:

1. Aggregates: Lightweight, 100% expanded shale, clay or slate produced by the rotary kiln method complying with ASTM C331, and graded from No. 4 to 0 to assure constant texture. The blending of screenings or any other deleterious substances which will impair the fire ratings or insulation value of the unit is prohibited.
2. Density: The oven dry density of the concrete masonry unit shall not exceed 90 lbs. per cu. ft.
3. Compressive Strength: Based on net area as follows:
   a. Minimum compressive strength of one unit: 1700 psi.
   b. Minimum average compressive strength of three units: 1900 psi.
4. Face Size: Nominal 8 in. x 16 in., unless otherwise shown. Width or thickness as indicated.
   a. Provide custom fabricated shapes and units as required per project conditions or as indicated on drawings.
5. Curing: Low pressure steam cure at a pressure not to exceed 12 psi. Raise the curing temperature uniformly at not more than 1 deg.

F. per minute from 80 deg. F. to a finish temperature of 180 deg. F. and allow the masonry units to reach equilibrium, approximately 3-1/2 hours from initial set period. Allow an interval (preset time) ranging from 2 to 5 hours between the forming of the units and the curing process.

6. Linear Shrinkage: Not over 0.065% at delivery when tested in accordance with ASTM C426.

7. Moisture Content: Not over 30%.

8. Provide special shapes where indicated and as follows:

   a. For lintels, corners, jambs, sash, control joints, headers, bonding and other special conditions.

   b. Provide square edged units for outside corners except as otherwise shown or specified.

9. Exposed Units: Provide units for exposed construction with fine textured surface, sharp straight arises, and without chips, cracks or other defects on exposed edges or surfaces which would impair appearance. Provide custom fabricated shapes and units as required per the design.

10. Integral Water-Repellant: Unless otherwise specified, provide manufactured concrete masonry units with integral water repellent for CMU in exterior wall (both face and backup) and other exterior units where exposed.

B. Ceramic Glazed Masonry Units (**BRK-01**): ASTM C-1405, Grade S, Class Exterior, and as follows:

1. Product: Glazed Brick – “Norman 6SSU”. No substitutions allowed.

2. Color/Gloss: Match approved control samples. Assume nine (9) standard colors and four (4) “Special Order” colors, thirteen (13) total colors.

3. Pattern: Custom pattern as indicated on drawings.

4. Fire rating: ASTM C-84 (UL723) requirements and rated zero flame spread, zero smoke developed and zero fuel contribution. Also will not release any toxic or noxious fumes when burned at 2000°F (1093°C).

5. Nominal Face: 2 ¼ in. height x 11 5/8 in. length, and as indicated on drawings. All dimensions are +/- allowable tolerance.

6. Nominal Bed Depths: 4 in. thickness bed depth and as indicated on drawings.

7. Shapes: Furnished as shown on the plans in accordance with manufacturers current standard production. All external corners, sills and jambs shall be square, unless otherwise noted. Lintels and internal corners shall be square, unless otherwise noted. The base course is straight and as shown on the drawings.

8. Provide special shapes where indicated and as follows:

   a. For lintels, corners, jambs, sash, control joints, headers, bonding and other special conditions.
   b. Provide square edged units for outside corners except as otherwise shown or specified.

9. Exposed Units: Provide units for exposed construction with fine textured surface, sharp straight arises, and without chips, cracks or other defects on exposed edges or surfaces which would impair appearance. Provide custom fabricated shapes and units as required per the design.

C. Ceramic Glazed Thin Brick Units (**BRK-02**): ASTM C 1088-13, Type TBS, Grade Exterior, and as follows:

1. Product: Glazed Thin Brick – “EB Thin Brick”. No substitutions allowed.

2. Color/Gloss: Match approved control sample. Assume nine (9) standard colors and four (4) “Special Order” colors, thirteen (13) total colors.

3. Pattern: Custom pattern as indicated on drawings.

4. Ceramic glaze Properties of Finish: ASTM C1405-12, Grade S (Select), Type I, Class Exterior

5. Fire rating: ASTM C-84 (UL723) requirements and rated zero flame spread, zero smoke developed and zero fuel contribution. Also will not release any toxic or noxious fumes when burned at 2000°F (1093°C).

6. Nominal Face: 2 ¼ in. height x 11 5/8 in. length, and as indicated on drawings. All dimensions are +/- allowable tolerance.

7. Nominal Bed Depths: 3/4” thickness bed depth and as indicated on drawings.

8. Shapes: Furnished as shown on the plans in accordance with manufacturers current standard production. All external corners, sills and jambs shall be square, unless otherwise noted. Lintels and internal corners shall be square, unless otherwise noted. The base course is straight and as shown on the drawings.

9. Provide special shapes where indicated and as follows:

   a. For lintels, corners, jambs, sash, control joints, headers, bonding and other special conditions.
   b. Provide square edged units for outside corners except as otherwise shown or specified.

10. Exposed Units: Provide units for exposed construction with fine textured surface, sharp straight arises, and without chips, cracks or other defects on exposed edges or surfaces which would impair appearance. Provide custom fabricated shapes and units as required per the design.

2.3 MORTAR AND GROUT MATERIALS

A. Portland Cement: ASTM C150, Type I or II, except Type III may be used for cold-weather construction. Provide natural color or white cement as required to produce the specified mortar color.

B. Hydrated Lime: ASTM C207, Type S.

C. Aggregate for Mortar: ASTM C144, except for joints less than 1/4 in. use aggregate graded with 100% passing the No. 16 sieve. In areas requiring white mortar use natural white sand or ground white stone.

D. Aggregate for Grout: ASTM C404.

E. Mortar Pigments: Natural and synthetic iron oxides and chromium oxides of high purity, nonfading and limeproof, compounded for use in mortar mixes; color as specified. Use only pigments with record of satisfactory performance in masonry mortars.

F. Water: Clear and free of harmful amounts of acid, alkalies, salts, organic materials or other deleterious material which would impair the Work.

G. Water Repellent Mortar Admixtures: Liquid water-repellent mortar admixture intended for use with concrete masonry units, containing integral water repellent by same manufacturer. Provide one of the following:

1. “Mortar Tite” (Addiment Incorporated).
2. “Dry-Block Mortar Admixture” (Grace Construction Products).
3. “Rheomix Rheopel” (Master Builders, Inc.).
4. Or approved equal.

2.4 MASONRY ANCHORS, REINFORCEMENT AND INSERTS

A. Acceptable manufacturers include Dur-O-Wall Inc., Heckman Building Products, Inc., Hohmann & Barnard, Inc or approved equal.

B. Anchors and Ties: ASTM A951; Stainless steel, complying with the following requirements:

1. Anchor Bolts: 1/2 in. dia., complying with ASTM F593 for bolts and ASTM F594 for nuts; 12 in. long with a 2 in. turned leg, unless otherwise shown. Provide bolts with stainless steel hex nuts and flat washers.
2. Column and Beam Anchors: As required for masonry support. Provide stainless steel units of profiles and sizes as required for locations shown.
3. Wire Ties: 10 gage, looped at both ends.
4. Wire Mesh Ties: 16 gage, 1/2 in. mesh, 3 in. wide, length as required.
5. Hardware Cloth: 16 gage, 1/2 in. mesh, size as required.
6. Anchor Straps: 1-1/4 in. x 1/8 in. by length required, with ends turned up 2 in.

C. Horizontal Joint Reinforcement and Wall Tie Assembly: Truss type two piece adjustable eye, fabricated from 3/16 inch diameter stainless steel wire; deformed side rods; smooth cross rods; out to out spacing of side rods not less than 2 in. less than nominal wall dimension. Provide manufacturer's standard or custom fabrications to comply with the specified requirements.

1. Cavity Walls for Seismic Applications: Truss type horizontal joint reinforcement specifically manufactured and tested for seismic applications; fabricated from 3/16 diameter stainless steel wire; sized for the inner wythe masonry construction with loose, adjustable anchors sized for the outer wythe masonry construction and designed for seismic applications. Provide prefabricated tee and corner units.

   a. "D/A 3700 S Seismic Dur-O Eye" (Dur-O-Wall).

   b. "Lox-All Adjustable Truss Type #170 with Seismiclip Interlock System" (Hohmann & Barnard, Inc.).

   c. Series 900 Cavity Hook and Eye with Wire-Bond Clip (WIRE-BOND)

   d. Or approved equal.

2. Single Wythe Concrete Masonry Units Walls: One piece stainless steel truss type horizontal joint reinforcement with prefabricated corner and tee units. Sizes as required for walls shown.

   a. "Dur-O-Wal D/A 3100 Truss" (Dur-O-Wal, Inc.).

   b. "Single Wythe Wall with #120 Truss Mesh" (Hohmann & Barnard, Inc.).

   c. “Two Wire System 300" (WIRE-BOND)

   d. Or approved equal.

3. Horizontal Wire Reinforcement: 3/16 inch diameter stainless steel wire. Utilize continuous horizontal wire in exterior CMU veneer above and below truss type horizontal joint reinforcement as specified above.

D. Reinforcement:

1. Rod Reinforcement: 1/4 in. stainless steel pencil rods free from mill scale and loose other deleterious matter.

2. Deformed Bar Reinforcement: Stainless steel, free from mill scale or other deleterious matter. Provide sizes and spacing as shown.

E. Reinforcing Bar Positioners: Wire units designed to fit into mortar bed joints spanning masonry unit cells with loops for holding reinforcing bars in center of cells. Units are formed from 0.14 in. steel wire, hot-dip galvanized after fabrication. Provide units with either two loops or four loops as needed for number of bars indicated. Provide one of the following:

1. “D/A 810, D/A 812 or D/A 817” (Dur-O-Wal).

2. “No. 376 Rebar Positioner“ (Heckmann Building Products Inc.).
3. “#RB or #RB-Twin Rebar Positioner” (Hohmann & Barnard, Inc.).
4. “O-Ring or Double O-Ring Rebar Positioner” (WIRE-BOND).
5. Or approved equal.

2.5 MASONRY ACCESSORY MATERIALS

A. Expansion and Control Joint Fillers: Provide a system of joint fillers for unit masonry work of sizes and profiles shown. Provide fillers in joints to receive sealant sized to allow space for sealant and back-up materials.

B. CMU Control Joints: ASTM D2000, Shore A Durometer 60-80. Preformed closed-cell synthetic rubber, size and shape intended for use with concrete masonry sash blocks, unless otherwise shown.

C. Open Cell Cavity Filler: Polyurethane plastic, open cell sponge material, 10 pores per in.

D. Metal Flashing Trim: Stainless steel, ASTM A167, Type 304, dead soft fully annealed except where harder temper required for forming or performance; 24 gauge unless otherwise shown, finish No. 2D. Provide factory preformed and crimped edge.

E. Weather Barrier: Provide air-vapor barrier specified in Section 07 13 00 "Sheet Waterproofing”.

F. Insulation: Provide insulation specified in Section 07 21 00 "Building Insulation”.

G. Weep Holes: Clear PVC tubing; 3/8 in. dia, lengths as required; Provide one of the following:

1. "AA223 Weep Holes" (AA Wire Products Co.).
2. "D/A 1005 Weep Hole" (Dur-O-Wal Inc.).
3. "Plastic Tube Weepholes" (Hohman & Barnard Inc.).
4. Or approved equal.

2.6 ANTI-GRAFFITI COATING

A. Concrete Masonry Anti-Graffiti Coating for application on exposed face: A non- sacrificial, water borne, breathable, non-yellowing, UV stable, VOC compliant, anti- graffiti coating. Provide NYSDOT item number 559.90010011.

2.7 MIXES

A. General: The total chloride (CL) ion content in the entire mortar or grout mix shall not exceed 0.10% of the weight of cement.

B. Mortar for Unit Masonry: ASTM C270, Portland Cement-Lime Mortar; Type N for interior work and exterior wall work except use Type S mortar for reinforced unit masonry. Do not use quicklime or masonry cement for mortar.

1. In mortar used for glazed concrete masonry units, sand shall pass a No. 16 sieve.

C. Pigmented Colored Mortar: For pigmented mortars, use colored Portland cement- lime mix of formulation required to produce color specified. Pigments shall not exceed 10 % of Portland cement by weight for mineral oxides or 2 for carbon black. Provide mortar mixes to match approved sample.

D. Grout: ASTM C476, Portland Cement Grout; provide individual mixes for fine aggregate grout and coarse aggregate grout as specified.

E. Measurement and Mixing of Mortar Materials: Comply with ASTM C270 for measuring and mixing of mortar materials and for retempering of mixed mortar. Measure and mix mortar to provide the following properties:

1. Compressive Strength: Minimum 28-day strength as follows:

a. Type N: 750 psi.

b. Type S for Reinforced Masonry Only: 1800 psi.

2. Water Retention: 75%, minimum.

3. Air Content: 12%, maximum.

F. Measurement and Mixing of Grout Materials: Comply with ASTM C476 for measuring and mixing of grout materials. Control batching procedure to ensure proper volume proportions of grout materials and to achieve a grout slump of 8 to 11 in., and a 28 day minimum compressive strength of 2500 psi in accordance with ASTM C1019.

G. Measuring Devices: Use accurate measuring devices to mix materials by volume. The use of shovels for measurement is prohibited.

H. Mixing of Pigmented Colored Mortars: Mix colored mortars separately to prevent contamination from other mortars.

I. Mixture and Retempering Procedures: Mix only sufficient mortar as required at a given time. Retemper stiffened mortar as required, except discard mortar not utilized within 2 hrs. of initial mixing. Do not retemper colored mortar.

2.8 SOURCE QUALITY CONTROL

A. Contractor's Quality Control Responsibilities: Contractor is solely responsible for quality control of the Work.

B. General: Provide and maintain an effective Quality Control program and perform sufficient inspections, surveys and tests of the Work, including those of other trades, to ensure compliance with the Contract Documents. Furnish appropriate facilities, accurately calibrated instruments and testing devices required to perform the quality control operations and with sufficient work forces to cover the construction operations within the actual construction sequences. Coordinate this work with the quality control requirements of other technical Sections of the Specifications and with requirements of the City of New York and governing authorities.

C. Contractor's Testing: Perform testing in an independent certified testing laboratory. Furnish the laboratory sufficient quantities of specimens to comply with referenced testing standards. Test and furnish test reports for materials specified.

1. Concrete Masonry Unit Testing: After review and approval of samples, test each type, class and grade of concrete masonry unit specified in accordance with ASTM C140. Provide testing specimens from actual production batches. Perform the following tests:

   a. Compressive strength.

   b. Absorption.

   c. Moisture content.

   d. Weight.

   e. Dimensions.

2. Prism Test: Provide a prism test for each type of wall construction indicated. Prism test concrete masonry units to determine the actual f'_m of the concrete masonry units wall construction. Construct and test concrete masonry units prisms in accordance with ASTM C1314, and to comply with requirements of the NYC Building Department.. Test grouted and hollow concrete masonry units wall specimens. Test concrete masonry units thickness and mortar types intended for use on the Project. Test prisms a minimum of 16 in. in height.

3. Aggregate Testing: Test aggregate as follows:

   a. Mortar Aggregate: ASTM C144.

   b. Grout Aggregate: ASTM C404.

4. Mortar Testing: Test mortar samples in accordance with ASTM C780 for mortar composition and properties. Test each mortar type and color each week. Prior to commencement of Work, provide preconstruction tests to establish a basis for comparison.

5. Grout Testing: Test and submit test reports of grout samples in accordance with ASTM C1019. Test grout during construction for each 5000 ft^2. of wall area or portion thereof. Prior to commencement of Work, provide preconstruction tests to establish a basis for comparison.

PART 3 - EXECUTION

3.1 GENERAL

A. Manufacturer's Instructions: Prepare substrates and erect the work of this Section, including components and accessories in accordance with the manufacturer's instructions, except where more stringent requirements are shown or specified, and where project conditions require extra precautions or provisions to ensure satisfactory performance of the Work.

3.2 EXAMINATION

A. Verification of Conditions: Examine the areas to receive the Work and the conditions under which the Work would be performed. Remedy conditions detrimental to the proper and timely completion of the Work. Do not proceed until unsatisfactory conditions have been corrected. Examine rough-in and built-in construction to verify actual locations of piping and other connections prior to installation.

3.3 INSTALLATION

A. Surface Preparation: Clean surfaces scheduled for unit masonry, before installation to remove dirt, dust, debris, loose material and other foreign matter detrimental to proper bonding.

B. Lay Out of Walls: Lay out walls in advance for accurate spacing of surface bond patterns with uniform joint widths and for accurate locating of openings, movement-type joints, returns, and offsets. Avoid the use of less-than-half-size units at corners, jambs, and where possible at other locations.

C. Lay Out and Maintenance of Plumb: Lay masonry plumb, true to line with level and accurately spaced courses; corners plumb and true; each course breaking joint with the course below, except as may be otherwise indicated or specified. Maintain plumb bond. Comply with tolerances as specified in "References" and the following:

1. For conspicuous vertical lines, such as external corners, door jambs, reveals, and expansion and control joints, do not vary from plumb by more than 1/4 in. in 20 ft., or 1/2 in. maximum.
2. For vertical alignment of exposed head joints, do not vary from plumb by more than 1/4 in. in 10 ft., or 1/2 in., maximum.
3. For conspicuous horizontal lines, such as exposed lintels, sills, parapets, and reveals, do not vary from level by more than 1/4 in., in 20 ft., or 1/2 in. maximum.
4. For exposed bed joints, do not vary from thickness indicated by more than plus or minus 1/8 in., with a maximum thickness limited to 1/2 in. Do not vary from bed-joint thickness of adjacent courses by more than 1/8 in
5. For exposed head joints, do not vary from thickness indicated by more than plus or minus 1/8 in. Do not vary from adjacent bed-joint and head-joint thicknesses by more than 1/8 in.

D. Anchor, tie, reinforce and bond masonry at corners and intersections in accordance with the applicable requirements of the NYC Building Department.

E. Leave openings for equipment to be installed before completion of masonry. After installation of equipment, complete masonry to match construction immediately adjacent to the opening.

F. Stopping and Resuming Work: In each course, rack back 2-unit length for one-half running bond or 1/3-unit length for one-third running bond;

do not tooth. Clean exposed surfaces of set masonry, wet clay masonry units lightly (if required), and remove loose masonry units and mortar prior to laying fresh masonry.

G. Condition of Exposed Masonry: No cracked, chipped, broken, discolored, defaced or open celled units will be permitted on exposed masonry. All masonry walls shall be braced for lateral loads until the final connections to the building frame are completed.

H. Cutting, patching and repairing in connection with masonry work as required to accommodate the work of other trades shall be performed under this Section.

I. Use of Motor Driven Diamond Saw: Use motor driven diamond saw designed to cut masonry units with clean sharp corners. Cut units as required to provide pattern shown and to fit adjoining work neatly. Use full units without cutting wherever possible. Avoid the use of less than half-size units at corners, jambs and at other locations.

J. Joints: Tool exposed joints slightly concave unless otherwise shown. Lay masonry unit with uniform joint widths. Tool joints to squeeze mortar back into joints. Tool after mortar has taken its initial set.

K. Anchors and Ties: Provide anchors and ties where shown and where required to supplement other reinforcement specified and in accordance with the project requirements.

1. Space anchors and ties a maximum of 16 in o.c. horizontally and vertically.

2. Set anchors, with vertical legs, within the core of the masonry wythe and fill core solid with mortar or grout.

3. Provide wire mesh ties, hardware cloth, or expanded lath below core space to retain mortar or grout at embedded anchors.

4. Provide loose anchors at columns, beams and other structural elements as shown and as required to support imposed loads. Install anchors to structural elements to prevent rattle and lateral displacement in any direction.

L. Flashing and Weep Holes: Install embedded flashing including weep holes if required, in masonry construction at shelf angles, lintels, ledges, other obstructions to downward flow of water in wall as indicated and as specified in Section 07 62 00, “Sheet Metal Flashing and Trim". Ensure that laps in flashing are fully adhered.

1. Prepare masonry surfaces so they are smooth and free from projections that could puncture flashing. Adhere flashing to interior face of cavity wall as shown and seal top edge with compatible sealant. Form to flashing lines shown on drawing to where it extends beyond building face. Slice off exposed flashing and seal with sealant.

2. At lintels and shelf angles, extend flashing a minimum of 4 in. into masonry at each end. At heads and sills, extend flashing 4 in. at ends and turn flashing up not less than 2 in. to form a pan. Protect flashing from damage during construction.

3. Install weep holes in the head joints in exterior wythes of the first and second course (staggered) of masonry immediately above the flashing line.

M. Installation of Loose Lintels, Relieving Angles and Other Miscellaneous Support Stainless Steel: Install loose lintels, relieving angles and other miscellaneous support stainless steel where shown. Adjust as required to provide square, level, plumb and true openings for attachment and alignment of other work. Grout lintels fully. Provide minimum lintel bearing at each jamb of 4 in. for openings which do not exceed 6 ft. and 8 in. for openings in excess of 6 ft.

1. Fill cores in hollow concrete masonry units with grout 3 courses (24 in.) under bearing plates, beams, lintels, posts, and similar items, unless otherwise shown.

2. At underside of relieving angles and other miscellaneous support stainless steel where shown or required, provide compressible filler.

N. Built-In Work: Build in frames, struts, hangers, miscellaneous metal and other items of work furnished under other Sections. Prepare for, build in and protect flashings, reglets, anchors and other similar items occurring in connection with work of this Section. Set and grout loose lintels. Build in anchors, furnishing such as may be required exclusively by reason of work under this Section.

1. Access Doors, Frames and Access Panels: Install access doors, frames and access panels occurring in masonry construction where shown and required for access to mechanical and electrical installations and equipment.

2. Chases, Slots, Reglets or Openings: Chases, slots, reglets or openings necessary for the proper installation of work of other trades shall be formed as required. Keep chases and reglets free from mortar or other debris.

O. Pointing: At completion of any portion of work, point holes in joints of exposed masonry surfaces by completely filling with mortar. Point up joints, including corners, openings, and adjacent construction, to provide a neat, uniform appearance. Prepare joints for sealant application. After pointing has hardened clean the masonry surfaces. Clean masonry in small sections prior to the installation of contiguous work by other trades.

3.4 LAYING CONCRETE MASONRY UNITS

A. Procedures for Erection of Concrete Masonry Units: Erect concrete masonry units (CMU) where shown. Solidly bed each course in mortar. Butter vertical joints their entire length. Lay concrete unit masonry with units in running bond with vertical joint in each course centered on units in courses above and below. Bond each course at corners and intersections

and bond into or anchor to adjacent construction with metal anchors spaced not over 16 in. o.c. in both directions. Do not use units with less than nominal 4 in. horizontal face dimensions at corners or jambs.

B. Procedures for Setting Units: Set units with care around frames so as not to bulge the sides or change the position of the frames. Break joints in units set around the tops of door frames so as to minimize the danger of loosening the units due to door jarring. Set units tightly against metal frames and fill voids completely. Build frame anchors into joints. Cut units accurately to fit around pipes, ducts, openings, etc. and fill voids full. Fill jambs and head of hollow metal frames solid with mortar.

C. Appearance of Work: Line up courses of exposed work throughout to obtain a uniform appearance. Install units at locations where conduits, pipes, etc. are to be enclosed in a manner to produce the regular jointing pattern of the adjacent surfaces. Provide necessary reinforcement for bonding where block units are used. Holes made in exposed units for attachment of handrail brackets and similar items shall be neatly drilled. Provide necessary special jamb, corner, angled corner, irregular and regular angle units where required to obtain smooth, evenly jointed and regular patterns throughout exposed surfaces.

D. Joint Reinforcement: Place joint reinforcement in horizontal mortar joints on 16 in. centers unless otherwise shown. Make reinforcement continuous except at control joints and expansion joints. Lap reinforcement 6 in. at ends and use prefabricated "T" and "L" sections at corners and intersections to provide continuity. Place reinforcement to obtain min. 5/8 in. mortar cover at side rods. Provide reinforcement in first and second bed joints above lintels and below sills extending 2 ft. beyond jamb openings.

E. Control Joints: Construct continuous control joints to provide an unbroken vertical separation through the entire thickness of walls, in the manner shown by the details, complying with referenced standards and at locations shown. Locations of control joints not shown shall be approved by the Design Consultant prior to the start of construction. Where locations are not shown, construct control joints throughout the unbroken length of walls as follows:

1. Not to exceed twenty (20) ft. on center in same plane as wall unless otherwise shown.
2. Where joints occur in construction supporting masonry wall.
3. Where masonry abuts dissimilar construction or structural element such as a column.
4. At one jamb for major openings less than 6 ft. in width and at both jambs for wider openings. (Control joints can be omitted if adequate tensile reinforcement, as approved, is placed above and below wall openings.)
5. Where a change occurs in masonry wall height or thickness, and at chases and recesses in the masonry wall.

F. Concrete Bond Beams and Lintels: Provide concrete bond beams and masonry lintels consisting of specially formed units, with reinforcing bars and Type M mortar fill, wherever shown and wherever openings in

concrete masonry of more than 1 ft. are shown without structural steel or other supporting lintels. Unless otherwise shown provide one bar for each 4 in. thickness of wall, and use bars of a size number not less than the number of feet of opening width. Provide minimum lintel bearing at each jamb of 4 in. for openings which do not exceed 6 ft. and 8 in. for openings in excess of 6 ft. Precast lintels or form lintels in place with adequate temporary support. Cure precast lintels thoroughly before handling and installing.

G. Miscellaneous Masonry Items: Install structural steel lintels and supports for unit masonry as indicated and as specified in Section 05 50 00, “Metal Fabrications”. Build sleeves, frames, or other miscellaneous metal items into masonry, and fill solidly around each built-in item as Work progresses

3.5 REINFORCED UNIT MASONRY

A. Reinforcement Placement:

1. Clean reinforcement of loose rust, mill scale, or other deleterious materials. Do not use reinforcement with kinks or reduced cross-section due to excessive rusting or other causes. Do not use reinforcement with bends other than shown on final shop drawings.

2. Position reinforcement accurately at spacing shown. Support and secure bars against displacement.

   a. Provide laps of dimension shown; if not shown, as required by the NYC Building Department.

3. Anchoring: Anchor masonry work to supporting structure as indicated. At intersection of reinforced masonry walls with non-reinforced masonry, provide anchorage as shown.

B. Temporary Shoring: Provide temporary shoring as required to support masonry elements; to conform to masonry shapes, lines and dimensions shown.

C. Installation of Reinforced Concrete Unit Masonry: Lay CMU units with full-face shell mortar beds. Use Type S mortar for reinforced unit masonry. Fill vertical head joints (end joints between units) solidly with mortar from face of unit to a distance behind face equal to not less than the thickness of longitudinal face shells. Solidly bed cross-webs of starting courses in mortar. Maintain head and bed joint widths shown, or if not shown, provide 3/8 in. joints.

D. Walls:

1. Pattern Bond: Lay CMU wall units in half running bond with vertical joints in each course centered on units in courses above and below, unless otherwise indicated. Bond and interlock each course at corners and intersections. Use special-shaped units where shown, and as required for corners, jambs, sash, control joints, lintels, bond beams and other special conditions.

   a. Maintain vertical continuity of core or cell cavities, which are to be reinforced and grouted, to provide minimum

clear dimensions indicated and to provide minimum clearance and grout coverage for vertical reinforcement bars. Keep cavities free of mortar. Solidly bed webs in mortar where adjacent to reinforced cores or cells.

2. Where horizontal reinforced beams (bond beams) are shown, use special units or modify regular units to allow for placement of continuous horizontal reinforcement bars. Place small mesh expanded metal lath or wire screening in mortar joints under bond beam courses over cores or cells of non- reinforced vertical cells, or provide units with solid bottoms.

3. Grouting: Install grout in accordance with ACI 530.1/ASCE 6.

   a. Use "Fine Grout" for filling spaces less than 3 in. in both horizontal directions.

   b. Use "Course Grout" for filling 3 in. spaces or larger in both horizontal directions.

4. Low-Lift Grouting:

   a. Provide minimum clear dimension of 2 in. and clear area of 8 $in.^2$ in vertical cores to be grouted.

   b. Place vertical reinforcement prior to laying of CMU. Extend above elevation of maximum pour height as required to allow for splicing. Support in position utilizing metal supports, centering clips, spacers, ties or caging devices located near the ends of each bar and at intermediate vertical intervals not exceeding 192 bar diameters nor 10 ft.

   c. Lay CMU to maximum pour height. Do not exceed 4 ft. height, or if bond beam occurs below 4 ft. height stop pour at course below bond beam.

   d. Pour grout using container with spout or by chute. Rod or vibrate grout during lacing. Place grout continuously; do not interrupt pouring of grout for more than one hour. Terminate grout pours 1- 1/2 in. below top course of pour except at the finish course. Puddle or agitate grout thoroughly to eliminate voids. Remove masonry displaced by grouting operation and re-lay in alignment with fresh mortar.

   e. Bond Beams: Stop grout in vertical cells 1-1/2 in. below bond beam course. Place horizontal reinforcement in bond beams; lap at corners and intersections as shown. Place grout in bond beam course before filling vertical cores above bond beam.

3.6 CAVITY WALL CONSTRUCTION

A. General: Construct cavity walls as shown; consisting of an outer wythe of face unit, an air space, cavity insulation, weepholes, fillers, flashings, vapor barrier and an inner wythe of CMU. The outer and inner masonry wythes shall be tied together with horizontal joint reinforcement.

B. Cavity Space: Care shall be taken to keep the cavity space free from mortar droppings and other deleterious materials. Use wood strips temporarily placed in cavity to collect mortar droppings. As work progresses, remove strips, clean off mortar droppings, and replace in cavity.

C. Flashing and Weephole Ventilators: At bottom terminations of cavity, install flashing continuously with weepholes. Provide weephole ventilators at bottom of cavity (see requirements under "Flashing and Weep Holes" above), not more than 2 ft. o.c. in the vertical unit joint resting on the horizontal leg of the relieving angle above the flashing.

D. Open Cell Filler Materials, and End Dams: At the bottom terminations of the cavity and at other flashing locations, install continuous open-cell filler material above flashing for the full width of the cavity and 8 in. vertically within the cavity. Coordinate with the related flashing work specified elsewhere. Provide end dams at flashing terminations, extending the full height of the flashing as described in "Flashing and Weep Holes" above.

E. Horizontal Joint Reinforcement: Provide continuous horizontal joint reinforcement at a maximum interval of 16 in. o.c. vertically, unless otherwise shown. Lap reinforcement not less than 6 in. at ends. Place reinforcement to obtain min. 5/8 in. mortar cover at side rods. Install reinforcement to engage between joints in the cavity insulation and mechanically lock the insulation in place to prevent displacement.

F. Additional Reinforcement: In locations where two-piece truss-type joint reinforcement is shown or required, provide an additional continuous horizontal wire or truss-type reinforcement within the face unit wythe at a maximum of 16 in. o.c. vertically. Locate wire reinforcement consistently one joint coursing above or below the adjustable pintle reinforcement and a minimum of 1 in. inward from the exterior face of the mortar joint.

G. Use of Compatible Mastic Adhesive to Secure Insulation: Secure insulation to the substrate utilizing following the manufacturer's printed instructions; butter insulation edges, cutouts and seams to insure continuous sealed joints.

1. Apply mastic barrier/adhesive in continuous film to surfaces to receive cavity insulation. Comply with mastic manufacturer's requirements for preparation of substrates and application. Apply mastic uniform in an unbroken film of uniform thickness.

2. Apply mastic with special attention and care to provide a complete seal at masonry anchors and other cavity projections.

H. Insulation in Mastic Barrier: Embed insulation in mastic barrier while mastic adhesive is still open.

I. Coordination of Installation Sequence: Coordinate installation sequence with flashing and other materials in cavity construction.

3.7 ANTI-GRAFFITI COATING APPLICATION

A. Manufacturer's Technical Representative: At the start of the installation and periodically as work progresses provide the services of the anti-graffiti manufacturer's technical representative at the job site as often as deemed necessary by the manufacturer to advise on phases of this work.

B. Surface Preparation: CMU surfaces to receive sealer shall be cleaned of dirt, oil, graffiti, grease, laitance, and other contaminants. All other surfaces shall be cleaned by mid-pressure water (1500 psi). Pressure wash all surfaces scheduled to receive anti-graffiti coating unless manufacturer recommends other acceptable method of cleaning. Remove dirt, dust and materials that will interfere with the proper and effective application of the anti-graffiti coating. Check the compatibility of all sealants and other material contiguous to or scheduled to be used with the anti-graffiti coating. Protect glass, metal, plastic and other non-porous substrates from overspray

C. Application

1. Anti-graffiti coating shall be applied as per manufacturer’s written application instructions and recommendations. Apply as a minimum 2 full coats (depending on porosity of CMU) allowing first coat to dry as per manufacturer's requirements.

2. Apply at temperature and weather conditions recommended by the manufacture or written in this specification. Surface residue shall be brushed out thoroughly until they completely penetrate into the surface. Protect treated areas from rain and other surface water for a period of not less than four hours after application.

3.8 CITY OF NEW YORK’S MONITORING ACTIVITIES

A. City of New York's Testing and Inspection Program: Testing and inspection will be performed, at any time during the progress of the Work, by an independent testing agency retained by the City of New York. Furnish materials and access to the Work as required by the City of New York’s Testing Agency.

3.9 ADJUSTING

A. Remove and replace defective materials; correct defective workmanship; leave masonry clean.

3.10 POINTING AND CLEANING

A. Removal of Excess Materials and Mortar Droppings: Execute work in as clean a manner as possible, removing excess materials and mortar droppings daily. Remove mortar droppings on connecting or adjoining work before it has attained final set.

B. Cleaning of Concrete Masonry: Concrete masonry units which are to remain exposed in the finished work shall be cleaned down daily at the end of each day's Work by the use of wire brushes or other method which will produce a satisfactory surface and in accordance with NCMA "TEK Note 45, Removal of stains from Concrete Masonry Walls".

3.11 ANTI-GRAFFITI COATING APPLICATION

A. Manufacturer's Technical Representative: At the start of the installation and periodically as work progresses provide the services of the anti-graffiti manufacturer's technical representative at the job site as often as deemed necessary by the manufacturer to advise on phases of this work.

B. Surface Preparation: CMU surfaces to receive sealer shall be cleaned of dirt, oil, graffiti, grease, laitance, and other contaminants. All other surfaces shall be cleaned by mid-pressure water (1500 psi). Pressure wash all surfaces scheduled to receive anti-graffiti coating unless manufacturer recommends other acceptable method of cleaning. Remove dirt, dust and materials that will interfere with the proper and effective application of the anti-graffiti coating. Check the compatibility of all sealants and other material contiguous to or scheduled to be used with the anti-graffiti coating. Protect glass, metal, plastic and other non-porous substrates from overspray

C. Application

1. Anti-graffiti coating shall be applied as per manufacturer’s written application instructions and recommendations. Apply as a minimum 2 full coats (depending on porosity of CMU) allowing first coat to dry as per manufacturer's requirements.

2. Apply at temperature and weather conditions recommended by the manufacture or written in this specification. Surface residue shall be brushed out thoroughly until they completely penetrate into the surface. Protect treated areas from rain and other surface water for a period of not less than four hours after application.

3.12 PROTECTION

A. General: Protect masonry from rain and snow until the work is complete and the mortar has set.

B. Waterproof Covering: Protect on-going and completed portions of work with strong waterproof membrane well secured in place, or other suitable protective methods. Where one wythe of multi-wythe masonry walls is completed in advance of other wythes, secure waterproof cover a minimum of 24 inches down face next to unconstructed wythe and hold cover in place.

C. Loads: Do not apply uniform floor or roof loads for at least 12 hours and concentrated loads for at least 3 days after building masonry walls or columns

D. Stain Prevention: Prevent grout, mortar, and soil from staining the face of masonry to be left exposed or painted. Remove immediately any grout, mortar, and soil that come in contact with such masonry. Protect base of walls from rain-splashed mud and mortar splatter by means of coverings spread on ground and over wall surface. Protect sills, ledges, and projections from mortar droppings. Protect surfaces of window and door frames, as well as similar products with painted and integral finishes from mortar droppings.

END OF SECTION

SECTION 05 50 00 – METAL FABRICATIONS

PART 1 - GENERAL

1.1 SUMMARY

A. General: Provide metal fabrications in accordance with requirements of the Contract Documents.

B. Related Work Specified Elsewhere

1. Bollards, footings, curb nosings, edge angles, nosings, frames, and other such items are furnished under this Section and installed under "Cast-in- Place Concrete" work.

2. Loose lintels, relieving angles, anchor bolts and miscellaneous supports for masonry walls are furnished under this Section and installed under Section 04 20 00 "Unit Masonry".

3. Steel Tube Supports for Sinks and Countertops furnished under this Section and installed under Section 05 80 00 "Architectural Formed Metals" and Plumbing requirements.

4. Waterproofing and flashing is specified in Sections 07 55 56 "Fluid-Applied Membrane Roofing" and 07 55 66 "Vegetated Fluid-Applied Protected Membrane Roofing".

5. Structural Steel Door Frames as required for door support are furnished under this Section and installed under Section 08 33 00 "Hollow Metal Doors and Frames".

6. Steel Frames for Coiling Doors as required for coiling door support are furnished under this Section and installed under Section 08 33 23 "Overhead Coiling Doors".

7. Finish painting is specified in Section 09 90 00 "Painting".

1.2 REFERENCES

A. General: Comply with the applicable provisions of the referenced standards except as modified by governing codes and the Contract Documents. Where a recommendation or suggestion occurs in the referenced standards, such recommendation or suggestion shall be considered mandatory. In the event of conflict between referenced standards, this specification or within themselves, the more stringent standard or requirement shall govern.

1. American Society for Testing and Materials (ASTM)

a. ASTM E894 "Standard Test Method for Anchorage of Permanent Metal Railing Systems and Rails for Buildings "

b. ASTM E935 "Standard Test Methods for Performance of Permanent Metal Railing Systems and Rails for Buildings".

c. ASTM E985 "Standard Specification for Permanent Metal Railing Systems and Rails for Buildings".

d. ASTM E1481 "Standard Terminology of Railing Systems and Rails for Buildings".

2. American Welding Society

a. AWS D1.1 "Structural Welding Code".

b. AWS D1.3 "Structural Welding Code -Sheet Steel".

c. AWS D1.2 "Structural Welding Code - Aluminum".

d. AWS D1.6 “Structural Welding – Stainless Steel”.

3. National Association of Architectural Metal Manufacturers

a. ANSI/NAAMM MBG 532 "Heavy Duty Metal Bar Grating Manual."

b. NAAMM "Pipe Railing Manual".

c. NAAMM "Metal Stairs Manual".

4. The Society for Protective Coatings (SSPC): "Steel Structures Painting Manual, Volume 2, Systems and Specifications".

5. Industrial Fasteners Institute (IFC)

a. "Fastener Standards Book".

1.3 SYSTEM DESCRIPTION

A. Performance Requirements

1. Structural Performance: Provide metal fabrications capable of withstanding design loads of the Work within limits and under conditions indicated and as follows:

a. Structural requirements shall be as indicated on project structural contract document requirements and as required by the NYC Building Department.

b. Wind Loading: Design, fabricate and install metal fabrications so that the installed metal fabrications will withstand project, ASCE-7, and New York City Building Code required inward and outward pressure.

2. Temperature Change Provisions: Design, fabricate and install exterior components to provide for expansion and contraction over an ambient temperature range of 120 deg. F. and a surface temperature range of 180 deg. F. without buckling, undue stress on members or anchors, and other detrimental effects. Fabricate joints that will be exposed to weather in a manner to exclude water, or provide weep holes where water may accumulate.

3. Design Modifications: Make design modifications of work shown only as may be necessary to meet performance requirements and

coordinate the work. Variations in details and materials which do not adversely affect appearance, durability or strength shall be submitted to the Engineer for review. Maintain the general design concept without altering profiles and alignments shown.

4. Design Modifications: Make design modifications of work shown only as may be necessary to meet performance requirements and coordinate the work. Variations in details and materials which do not adversely affect appearance, durability or strength shall be submitted to the Engineer for review. Maintain the general design concept without altering profiles and alignments shown.

1.4 SUBMITTALS

A. Product Data: Submit for Engineer’s approval. Furnish manufacturer’s literature describing the general properties of each product to be used in the Work. Include, manufacturer’s technical data documenting the primary function, quality and performance of each system and containing specification for each material, load tables, dimension diagrams and installation instructions, or other such information as required by the drawings and specifications.

B. Shop Drawings: Submit for Engineer's action Provide shop drawings detailing fabrication, installation and erection of each metal fabrication item, including dimensioned plans and elevations, drawn at a minimum scale of 1 in. = 1 ft. and details of sections, connections, anchorage and accessory items, drawn at a minimum scale of 3 in. = 1 ft.. Provide templates for anchors and bolts specified for installation under other Sections.

1. Setting Drawings: Provide setting drawings and templates for the location of metal fabrications items that are to be embedded in or anchored to concrete or masonry.

C. Samples: Label samples to indicate product, characteristics, and location in the Work. Samples will be reviewed for color and appearance only. Furnish sufficient samples to establish the full range of colors and textures for materials exposed in the finished work. Compliance with other requirements is the responsibility of the Contractor. Provide the following:

1. Ballard: Two (2) 24 inch long sections with cap, fully finished.

D. Quality Control Submittals: Submit the following for Engineer’s information:

1. Reports: copies of welder pre-qualification and other welding procedures in form prescribed in AWS "Structural Welding Code".

1.5 QUALITY ASSURANCE

A. Qualified Installer: The entity performing the work of this section must, within the last five (5) consecutive years prior to the bid opening have successfully completed in a timely fashion at least three (3) projects similar in scope, size and type to the required work.

B. Single Source Responsibility: Obtain each type metal fabrication from one source of a single manufacturer and with sufficient production capacity to produce required units without causing delay to the Work. Obtain accessory products used in conjunction with metal fabrications from the metal fabrications manufacturer or from sources acceptable to the metal fabrications manufacturer. The manufacturer must, for the past five (5) years, have been regularly engaged in the manufacture of material or equipment similar in type to that required for this Project. Such material or equipment provided by the manufacturer must have been in satisfactory service for not less than five (5) years.

C. Regulatory Requirements: Comply with applicable requirements of the laws, codes, ordinances and regulations of Federal, State and Municipal authorities. Obtain necessary approvals from the NYC Building Department.

D. Pre-Installation Meetings: Prior to the start of the Work, meet at the Project site to review methods and sequence of metal fabrication installation, special details and conditions, standard of workmanship, testing and quality control requirements, job organization and other pertinent topics related to the Work.

1.6 DELIVERY, STORAGE, AND HANDLING

A. Storage and Handling: Store metal fabrications items under cover and off the ground. Handle in a manner so as to protect surfaces and to prevent distortion of, and any other type of damage to, fabricated pieces.

PART 2 - PRODUCTS

2.1 METAL MATERIALS

A. Metal Surfaces, General: For metal fabrications work which will be exposed to view in the finished work, use only materials which are smooth and free of surface blemishes including pitting, seam marks, roller marks, rolled trade names and roughness. Remove blemishes by grinding, or by welding and grinding, prior to cleaning, treating, and applying surface finishes.

B. Steel

1. Structural Steel Shapes, Plates and Bars: ASTM A36.

2. Rolled Steel Floor Plates: ASTM A786 rolled from plate complying with ASTM A36 or ASTM A283, Grade C or D. Thickness shown for raised pattern safety plates is exclusive of projected pattern.

3. Steel Tubing: ASTM A500; Cold-formed, welded or seamless process. For exterior use and other locations noted, provide hot-dip galvanized (minimum spangle) tubing in accordance with ASTM A153.

4. Steel Pipe: ASTM A53, Type S, Grade B, suitable for close coiling, black finish unless galvanizing is required; standard weight (Schedule 40), unless otherwise indicated or required to satisfy performance criteria.

5. Steel Bars and Bar Size Shapes: ASTM A675, Grade 65, or ASTM A36.

6. Cold Finished Steel Bars: ASTM A108, grade as selected by

fabricator.

7. Cold Rolled Carbon Steel Sheets: Commercial quality, or structural quality, complying with ASTM A1008 , Grade A, unless another grade is required by design loads, stretcher leveled if exposed, free from scale, pitting or other defects.

8. Galvanized Carbon Steel Sheets: ASTM A653, hot-dip galvanized with G90 coating (minimum spangle), either commercial quality or structural quality, Grade 33, unless another grade is required for design loads.

9. Uncoated, Hot-Rolled Steel Sheet: Commercial quality, or structural quality, complying with ASTM A1011, Grade 30, unless another grade is required by design loads.

C. Aluminum: Provide alloy and temper recommended by aluminum producer or finisher for type of use and finish specified or shown, and with not less than the strength and durability properties of the alloy and temper designated below for each aluminum form required.

1. Extruded Bar and Shapes: ASTM B221, 6063-T6.

2. Extruded Pipe and Tube: ASTM B429, 6063-T6.

3. Plate and Sheet: ASTM B209, 6061-T6.

4. Aluminum-Alloy Rolled Tread Plate: ASTM B632, aluminum alloy 6061-T4 for treads. Thickness shown for raised aluminum pattern plates is exclusive of projected pattern.

5. Aluminum Finishes: Finish designations prefixed by "AA" conform to the system established by the Aluminum Association for designating aluminum finishes.

a. As Fabricated Finish: AA-M10; (Mechanical Finish as fabricated, unspecified).

D. Stainless Steel

1. ASTM A240; Provide the most suitable austenitic alloy, form and finish required to produce the Work. Provide Type 316 and low carbon 316L for components to be welded (exterior), type 304 and low carbon 304L for components to be welded (interior), unless otherwise noted.

a. Plate and Sheet: ASTM A480, Stretcher level sheets.

b. Bar Stock and Shapes: ASTM A276.

c. Round, Square and Rectangular Welded Tubing: ASTM A554, Grades MT 316 or MT 316L as standard.

d. Pipe: ASTM A312 (A312M), Grade TP 304.

e. Castings: ASTM A743 (A743M), Grade CF8 or CF20.

E. Castings

1. Gray Iron Castings: ASTM A48, Class 30 unless another class is indicated or required by structural loads.

2. Malleable Iron Castings: ASTM A47, Grade 32510.

3. Ductile Iron Castings: ASTM A536, grade as selected by fabricator.

4. Abrasive Castings: Metal shown or specified, of suitable alloy for casting and for structural strength, with an evenly distributed exposed surface treatment of not less than 2 oz./ft.^{2} of abrasive granules. Provide electric furnace produced virgin aluminum oxide granules ranging in size from No. 16 to No. 24 and fired into the metal surface.

2.2 FASTENER AND ANCHORAGE MATERIALS

A. Concrete Inserts and Anchors: Anchors and inserts capable of sustaining, without failure, the load imposed within a safety factor of 4 as determined by tested in accordance with ASTM E448. Threaded or wedge type, galvanized ferrous castings, either malleable iron ASTM A47 or cast steel ASTM A27. Provide bolts, washers and shims as required, hot dip galvanized, ASTM A153, Class A.

B. Fasteners and Anchorage Devices: Provide fasteners complying with the requirements of Industrial Fasteners Institute standards. Type, grade, class and style best suited for the respective purpose. Use countersunk flat-head Phillips type machine screws for exposed fasteners, except where Allen head screws are required. Use stainless steel fasteners for exterior construction and for fastening components fabricated of galvanized steel.

1. Provide Type 304 or 316 stainless-steel fasteners for exterior use and zinc-plated fasteners with coating complying with ASTM B633, Class Fe/Zn 5, where fastening components fabricated of galvanized steel.

2. Steel Bolts and Nuts: Regular hexagon-head bolts, ASTM A307, Grade A; with hex nuts, ASTM A563; and, where required, flat washers

3. Stainless-Steel Bolts and Nuts: Regular hexagon-head annealed stainless- steel bolts, nuts and, where required, flat washers; ASTM F593 for bolts and ASTM F594 for nuts.

4. Expansion Anchors: Anchor bolt and sleeve assembly of material indicated below with capability to sustain, without failure, a load equal to six times the load imposed when installed in unit masonry and equal to four times the load imposed when installed in concrete, as determined by testing per ASTM E488, conducted by a qualified independent testing agency.

a. Material for Indoor Conditions: Carbon-steel components zinc-plated to comply with ASTM B633, Class Fe/Zn 5.

b. Material for Exterior Conditions: Alloy Group 1 or 2 stainless-steel bolts complying with ASTM F593 and nuts complying with ASTM F594.

C. Non-metallic Shrinkage Resistant Grout: Premixed, prepackaged, nonmetallic, noncorrosive, nonstaining, non-gaseous, shrinkage resistant product containing selected silica sands, Portland cement, shrinkage compensating agents, plasticizing and water-reducing agents, complying with CE-CRD-C621 and ASTM C1107 Grade B or Grade C, free of gas-producing

or gas-releasing agents, oxidizing catalysts, inorganic accelerators and chlorides. Grout shall be bleed free and attain 7,500 psi compressive strength in 28 days at a fluid consistency of 20 to 30 seconds. Provide one of the following:

1. "Five Star Grout" (U.S. Grout Corp.).
2. "Masterflow 713 Plus" (Chemrex Inc.).
3. "Crystex" (L&M Construction Chemicals, Inc.).
4. "Sure Grip Grout" (Dayton Superior).
5. Or approved equal.

2.3 PAINT MATERIALS

A. Paint: Provide primer and finish paint as supplied by a single manufacturer for the entire project.

1. Exterior Ferrous Metal Primer: Compatible with finish coats of paint; shop apply primer to the respective dry film mil thickness specified or as recommended by the manufacturer; Provide one of the following:
   a. "Hi-Build Epoxoline II Series N69" (Tnemec Co. Inc.); 4.0 - 6.0 mils
      (100µm -150µm) d.f.t.
   b. "Carboguard 888 Series" (Carboline Co.); 4.0 - 6.0 mils (100µm -
      150µm) d.f.t.
   c. “Interseal 670HS (International Paint), 4.0-8.0 mils (100µm - 200µm) min d.f.t.
   d. Or approved equal.
2. Finish Paint for Exterior Exposed Ferrous Metals, Loose Lintels, Shelf and Relieving Angles and Dunnage: Color as selected by the Engineer. Shop finish paint apply to the respective dry film mil thickness specified or as recommended by the manufacturer; one of the following:
   a. "Carbothane 133 Series/833" (Carboline Co.). 3.0 - 5.0 mils (75µm -125µm) d.f.t.
   b. "Endura-Shield II 1075" (Tnemec Co. Inc.); 3.0 - 5.0 mils (75µm -
      125µm) d.f.t.
   c. “Interthane 870UHS” (International Paint), 5.0- 8.0 mils (125µm -
      200µm) min d.f.t.
   d. Or approved equal.
3. Interior Ferrous Metal Primer: Compatible with the finish coats of paint (see Section 09 90 00 "Painting" for finish coats of Paint); shop apply

primer to the respective dry film mil thickness specified or as recommended by the manufacturer; Provide one of the following:

a. "Series 10-99" (Tnemec Co. Inc.); 2.0 - 3.5 mils (50µm -80µm) d.f.t.

b. "Carbocoat 115" (Carboline Co.); 1.5 - 2.0 mils (38µm to 50µm) d.f.t.

c. “Interprime 298” (International Paint), 3.0-4.0 mils (75µm - 100µm) min d.f.t.

d. Or approved equal.

4. Galvanizing Repair Paint: Zinc rich paint for repairing galvanized surfaces and field welds complying with requirements of ASTM A780. Thickness of applied galvanizing repair paint shall be not less than coating thickness required by ASTM A123 or ASTM A153 as applicable.

5. Dielectric Separator: Cold applied, asphalt emulsion type complying with ASTM D1187, non-sagging, resistant to severe corrosion conditions; applied in two coats for an overall minimum dry film thickness of 25 mils (625µm) or heavy coating of epoxy paint in minimum 2.0 mils (50µm) dry film.

2.4 FABRICATION

A. Supplementary Parts: Include supplementary parts necessary to complete metal fabrications work though not definitely shown or specified. Such parts include, but are not limited to, interface components necessary for the installation or anchorage to Work.

B. Verification of Measurements and Dimensions and Coordination and Schedule of Work: Verify measurements and dimensions at the job site and cooperate in the coordination and scheduling of the work of this Section with the work of related trades (with particular attention given to the installation of items embedded in concrete and masonry).

C. Formation of Exposed Work: Form exposed work true to line and level with accurate angles and surfaces and straight sharp edges. Ease exposed edges to a radius of approximately 1/32 in., unless otherwise shown. Form bent metal corners to smallest radius possible without causing grain separation or otherwise impairing work.

D. Formation of Exposed Connections: Form exposed connections with hairline joints, flush and smooth; using concealed fasteners where possible. Exposed threaded portion of bolts and screws shall be cut off flush with adjacent metal. Cut, drill, punch and tap as required for the installation and attachment of other work to metal fabrications work. Shear and punch metals cleanly and accurately. Remove burrs. Remove sharp or rough areas on exposed traffic surfaces.

E. Formation of Metal Work: Form metal work built in with concrete or masonry for anchorage, or provide suitable anchors, expansion shields, or other anchoring devices shown or required to provide support for intended use.

Furnish metal work in ample time for setting and securing in place.

F. Procedures for Joints and Welds: Make joints as strong and rigid as adjoining sections. Make welds continuous along entire line of contact, except where spot welding is indicated. Grind exposed welds flush and smooth to match and blend with adjoining surfaces. Welded connections may be used where bolted connections are shown. Fabricate joints exposed to weather in a manner to exclude water, or provide weep holes where water may accumulate.

1. Make up threaded connections tight so that threads are entirely concealed. Shoulder and head, dowel and pin abutting bars. Provide bolt and screw heads flat and countersunk in exposed work. Carefully machine, fit and secure removable members by means of Allen-head set screws of proper size and spacing.

G. Galvanizing

1. ASTM A153, Classes A and B, for galvanizing iron and steel hardware.

2. ASTM A123, for galvanizing rolled, pressed and forged steel shapes, plates, bars, strip 1/8 in. thick and heavier and for assembled steel

3. Items to be Galvanized: Galvanize ferrous metal utilized on the exterior and items embedded in concrete whether interior or exterior, unless otherwise specified. Galvanize other items where specified or shown.

H. Preassembly of Items: Preassemble items in shop to greatest extent possible to minimize field splicing and assembly. Following trial fit, disassemble units only as necessary for shipping and handling. Clearly mark units for reassembly. Provide alignment and splice plates for accurate field fit.

2.5 OPENING FRAMES, GUARDS AND COVERS

A. Opening Frames, Guards and Curbs: Provide frames and strips of the sizes, shapes and profiles shown or, if not shown, of the required dimensions to receive adjacent grating, plates, doors or other work to be retained by the framing. Fabricate from structural steel shapes and plates and steel bars, using welded construction with mitered corners, welded brackets and splice plates and a minimum number of joints for field connection. cut, drill and tap units to receive hardware and similar items to be anchored to the work.

1. Anchors: Equip units with integrally welded anchor straps for casting into concrete or building into masonry. Unless otherwise noted, space anchors 24 in. o.c., and provide minimum 1/4 in. thick anchor units of 1-1/4 in. x 8 in. steel straps.

B. Bollards: Provide bollards of steel pipe, diameter and height as shown, inset into cast-in-place concrete and filled with concrete. Weld top plate to steel bollard, grinding down welds smooth unless otherwise indicated on drawings.

C. Pipe Guards: Provide pipe guards of 3 in. x 3 in. x 5/16 in. steel angles, extending from floor to 3 ft. 4 in. above floor. Provide with 3/8 in. steel base plates for bolting to floor, and with 1/4 in. x 2 in. steel strap braces at top. Provide at least 2 vertical angles at each location, except at internal corners, and extend strap between angles and from each angle to wall or column.

D. Pipe Guards: Custom fabricate to the sizes shapes and profiles shown using bent steel plate or steel shapes as indicated. Provide system for anchoring into structure.

E. Corner Guards: Provide steel angle corner guards of size as shown, with anchors welded to backs of angles at 2 ft. centers with a minimum of three (3) anchors per unit.

F. Curb Nosings: Provide where shown 13 in. high x 3/8 in. thick galvanized steel plate curb nosing complete with 1/2 in. dia. anchors welded to back of nosing at 1 ft. staggered centers. Top of nosing shall be rounded to a 1 in. inside radius as shown.

G. Edge Angles

1. Provide edge angles of size as shown, with welded-on strap or stud anchors 2 ft. on centers.

2. Provide angles in as long lengths as possible. Miter and weld corners and provide splice plates for alignment between sections.

2.6 SUPPORTS FOR MASONRY

A. Loose Lintels

1. Furnish loose stainless steel lintels as shown and/or as required over openings in masonry walls, partitions and shafts. Include lintels for mechanical openings as required. Furnish lintels 16 in. longer than the opening widths. Where metal door frames are provided with integral head reinforcement, furnish loose lintels only for such openings 3 ft. 4 in. wide and wider. Weld adjoining members together to form a single unit where indicated. Provide 2B finish where exposed.

B. Loose Lintel Schedule (angle sizes, inches)

Opening Width	□	□	□	10 in. and
(Max.)	4 in. Wall	6 in. Wall	8 in. Wall*	12 in. Wall*
2 ft.	3-1/2 x 3-1/2 x ¼	5 x 5 x 5/16	3-1/2 x 3-1/2 x 1/4	8 x 4 x 1/2
3 ft.	3-1/2 x 3-1/2 x ¼	5 x 5 x 5/16	3-1/2 x 3-1/2 x 1/4	8 x 4 x1/ 2
4 ft.	3-1/2 x 3-1/2 x1/4	5 x 5 x 5/16	3-1/2 x 3-1/2 x 1/4	8 x 4 x 1/2
5 ft.	3-1/2 x 3-1/2 x1/4	5 x 5 x 5/16	3-1/2 x 3-1/2 x 1/4	8 x 4 x 1/2
6 ft.	3-1/2 x 3-1/2 x ¼	5 x 5 x 5/16	3-1/2 x 3-1/2 x 1/4	8 x 4 x 1/2
7 ft.	3-1/2 x 3-1/2 x ¼	5 x 5 x 5/16	3-1/2 x 3-1/2 x1/4	8 x 4 x 1/2
8 ft.	4 x 3-1/2 x ¼	5 x 5 x 5/16	4 x 3-1/2 x 1/4	8 x 4 x 5/8

* Furnish two angles at all openings in 8 in., 10in. and 12 in. walls. Furnish a lintel angle for each masonry wythe.

C. Loose Bearing and Closure Plates: Provide stainless steel loose bearing and

leveling plates for steel items bearing on masonry or concrete construction, fabricated flat, free from warps or twists and of required thickness and bearing area. Provide integral anchorages as indicated or if not indicated as required for a complete installation.

D. Leveling Plates: Provide stainless steel loose leveling plates for steel columns bearing on concrete construction, fabricated flat, free from warps or twists and of required thickness and bearing area. Leveling plates to be 1/4 in. thick and match column base plate dimensions. Leveling plates to be set on 1 1/4 in. grout bed as shown.

E. Shelf and Relieving Angles: Furnish shelf and relieving angles fabricated from stainless steel angles of sizes indicated and for attachment to structural framing. Provide slotted holes to receive 3/4 in. dia. bolts, spaced not more than 6 in. from ends and not more than 24 in. on center, unless otherwise shown or specified. Provide 2B finish where exposed.

1. Fabricate units in convenient lengths from field measurements for each location of use, provide joint gaps in angles at all locations of masonry control joints and expansion joints. Size joint gaps to match width of the masonry joints in the location of use. Provide joints in other locations, as required for fabrication only, with tight joints.

2. Provide slotted holes to allow adjustment of shelf and relieving angles to building substrates and to allow for proper installation of masonry elements.

3. Provide units at corners and other transitions fabricated into one piece.

2.7 STEEL LADDERS

A. Steel Ladder (**LDR-01**):

1. Provide hot-dipped galvanized steel ladders as shown, complete with supporting brackets, stringers, railings and rungs.

2. Provide non-slip surface on the top of each rung, either by coating the rung with aluminum oxide granules set in epoxy resin adhesive, or by using a type of manufactured rung which is filled with aluminum oxide grout.

2.8 MISCELLANEOUS FRAMING AND SUPPORTS

A. Steel Framing, Subframing and Supports: Provide steel framing and subframing and supports for applications shown and not specifically provided as part of the work of other trades.

1. Exterior work and within and/or on exterior walls and roof: Stainless Steel (Type 316 and 316L) with No. 4 finish.

2. Interior Work: Hot-dipped Galvanized Steel unless otherwise specified.

B. Steel Weld Plates and Angles: Provide stainless steel weld plates and angles not specified in other Sections, for items supported from concrete construction as needed to complete the Work. Provide each unit with not less than two integrally welded steel strap anchors for embedding in concrete

C. Items Required for Framing and Support: Furnish bent, or otherwise custom-fabricated, bolts, plates, anchors, hangers, dowels, and other miscellaneous stainless steel shapes as required for framing and supporting woodwork and other type items, and for anchoring or securing woodwork and other type items, to concrete or other structures. Fabricate items to sizes, shapes, and dimensions required. Furnish stainless steel washers for heads and nuts that bear on connections.

D. Fabrication of Miscellaneous Units: Fabricate miscellaneous units to sizes, shapes and profiles shown or, if not shown, of required dimensions to receive adjacent work to be retained by framing. Fabricate from structural steel shapes and plates and steel bars, of welded construction using mitered joints for field connection, except where otherwise shown. Cut, drill and tap units to receive hardware and similar items.

E. Anchors and Inserts: Provide units with integrally welded anchors for casting into concrete or building into masonry. Furnish inserts if units must be installed after concrete is placed.

1. Space anchors 24 in. o.c. and provide minimum anchor units of 1-1/4 in. x 8 in. x 3 in. steel straps, except as otherwise shown.

F. Steel Tube Supports for Sinks and Countertops: Where required, utilize hot-dipped galvanized steel tube supports sized to support dead loads of countertops, and in addition a uniform live load of 300 psf. Where exposed in the finish work, provide welded connections, ground smooth and primed for field painting specified in Section 09 90 00, "Paints and Coatings ". Where concealed, utilize bolts and connectors of capacity required to support imposed live and dead loads. Anchor steel tubes to structural walls and slabs as required for a secure and rigid installations. Fasten tubes to countertops with fasteners applied through the tubes into the underside of tops, and in sufficient quantity for a secure installation.

G. Steel Frames for Coiling Doors: Provide hot-dipped galvanized steel door frames for coiling doors fabricated from structural shapes in accordance with the requirements of the door manufacturer. Plug weld built-up members and continuously weld exposed joints. For securing door frames into adjacent masonry or concrete, provide stainless steel strap anchors 1/8 in. thick x 2 in. wide length required for a minimum 8 in. embedment, unless otherwise shown. Weld anchors to frame jambs not more than 12 in. from both bottom and head of frame and space anchors not more than 30 in. apart. Extend bottom of frames to floor elevation indicated with steel angle clips welded to frames. Reinforce, drill, tap and prepare as required to receive finish hardware.

H. Structural-Steel Door Frames: Fabricate hot-dipped galvanized structural-steel door frames from steel shapes, plates, and bars of size and to dimensions indicated, fully welded together, with 5/8 in. by 1-1/2 in. steel channel stops, unless otherwise indicated. Plug-weld built-up members and continuously weld exposed joints. Secure removable stops to frame with countersunk machine screws, uniformly spaced at not more than 10 in. o.c. Reinforce frames and drill and tap as necessary to accept finish hardware. Provide with integrally welded steel strap anchors for securing door frames into adjoining concrete or masonry.

2.9 SHOP CLEANING AND PAINTING

A. Metal Fabrications Work: Hot-dip galvanize metal fabrications work, except members of stainless steel, unless otherwise specified.

B. Removal Of Oil, Grease And Similar Contaminants: Remove oil, grease and similar contaminants in accordance with SSPC SP-1 "Solvent Cleaning", prior to additional surface preparation specified.

C. Metal Surfaces: Clean and prepare metal surfaces before hot-dip galvanizing. Remove rust and mill scale in accordance with SSPC SP-3 "Power Tool Cleaning", and SSPC SP-6 for exterior exposed ferrous metal.

D. Application of Primer for Painting Prep: Immediately after surface preparation, apply primer in accordance with manufacturer's instructions. Use painting methods which will result in full coverage and dry film thickness specified.

E. Procedures for Primer and Finish Paint: Apply one shop coat of primer to fabricated metal items, except apply 2 coats of primer to surfaces inaccessible after assembly or erection. In addition, apply one shop coat of finish paint to entire surfaces of exterior loose lintels, shelf and relieving angles, dunnage and other items as noted or specified. Use thinners only as specified by the coating manufacturer. The entire coating system shall be as supplied by a single manufacturer.

F. Dissimilar Materials: Separate dissimilar metals with coating of dielectric separator. Do not extend coating onto exposed or finished surfaces.

2.10 SOURCE QUALITY CONTROL

A. Contractor’s Quality Control Responsibilities: Contractor is solely responsible for quality control of the Work.

B. Contractor’s Inspection and Testing Agency: Contractor shall employ, at its own expense, an independent full time inspection agency to perform testing and inspection services for metal fabrication work as follows. Non-conforming Work shall be retested and paid for by Contractor.

C. Shop Inspection of Connections: Perform 100% visual inspection at bolted and welded connections in the Work. Examine the size, quality and placement of each connection to verify installation in accordance with Contract Documents and approved shop drawings.

PART 3 - EXECUTION

3.1 GENERAL

A. Manufacturer's Instructions: Prepare substrates and install the work of this Section, including, components and accessories in accordance with the manufacturer's instructions, except where more stringent requirements are shown or specified, and where project conditions require extra precautions or provisions to ensure satisfactory performance of the Work.

3.2 EXAMINATION

A. Verification of Conditions: Examine the areas to receive the Work and the conditions under which the Work would be performed. Contractor shall remedy conditions detrimental to the proper and timely completion of the

Work. Do not proceed until unsatisfactory conditions have been corrected.

3.3 COORDINATION

A. Coordinate installation of anchorages for metal fabrications. Furnish setting drawings, templates, and directions for installing anchorages, including sleeves, concrete inserts, anchor bolts, and items with integral anchors, that are to be embedded in concrete or masonry. Deliver such items to Project site in time for installation.

B. Coordinate installation of steel weld plates and angles for casting into concrete that are specified in this Section but required for work of another Section. Deliver such items to Project site in time for installation.

3.4 PREPARATION

A. Substrate Acceptability: Commencement of installation shall constitute acceptance of substrate conditions by the Installer

3.5 INSTALLATION

A. General: Install work as shown, plumb, level and in line with adjacent materials where required. Provide fastenings as indicated on the Drawings, specified herein or as shown on final shop drawings. Fit exposed connections accurately together to form tight hairline joints.

1. Weld Plates and Angles: Coordinate installation of weld plates and angles for casting into concrete construction that are specified in this Section but required for work of another Section. Deliver such items to Project site in time for installation.

2. Anchorages: Coordinate and furnish anchorages, setting drawings, diagrams, templates, instructions and directions for installation of anchorages, including steel weld plates and angles, concrete inserts, sleeves, anchor bolts and other miscellaneous items having integral anchors that are to be embedded in concrete or masonry construction. Coordinate delivery of such items to the project site. Deliver items which are to be built into the work of other Sections in time so as not to delay the progress of the Work.

B. Procedures for Fastening Metal Work: Except where otherwise specified for a particular item for built-in work, fasten metal work to concrete or solid masonry with embedded anchors or expansion bolts, and to hollow block with toggle bolts. Fastening to wood plugs will not be permitted. Drill holes for bolts to the exact diameter of the bolt. Provide screws threaded full length to the screw head.

C. Field Welding: Comply with AWS Welding Code for procedures related to field welding as related to appearance and quality of welds made and for methods used in correcting welding work. Use materials and methods that minimize distortion and develop strength and corrosion resistance of base metals. Obtain fusion without undercut or overlap. Remove welding flux immediately. At exposed connections, finish exposed welds and surfaces smooth and blended so that no roughness shows after finishing and contour of welded surface matches those adjacent.

D. Protection of Finished Surfaces: Protect finished surfaces against damage during construction and remove protection at time of substantial completion.

E. Dissimilar Materials: Separate dissimilar metals with heavy coating of dielectric separator. Do not extend coating onto exposed or finished surfaces.

F. Bollards

1. Anchor bollards in concrete with pipe sleeves preset and anchored into concrete. After bollards have been inserted into sleeves, fill annular space between bollard and sleeve solidly with nonshrink, nonmetallic grout, mixed and placed to comply with grout manufacturer's directions.

2. Fill bollards solidly with concrete. Weld top plate to steel bollard, grinding down welds smooth.

G. Installation of Pipe Guards: Anchor pipe guards to concrete or masonry construction as shown.

I. Nosings and Thresholds: Install with anchorage system indicated or if not indicated to comply with manufacturer's written instructions and recommendations. Seal thresholds exposed to exterior with elastomeric sealant complying with Section 07 92 00 "Joint Sealants" to provide a watertight installation.

3.6 FIELD QUALITY CONTROL

A. Contractor’s Quality Control Responsibilities: Contractor is solely responsible for quality control of the Work.

B. Connection Identification: Assign each bolting crew and welder an identifying symbol, and require them to mark every connection, so that an inspector may identify the person(s) making each connection.

C. Qualification for Field Welding: Qualify the welding operators and welding procedures in accordance with AWS D1.1 and D1.3 requirements.

D. Field Inspection of Connections: Perform 100% visual inspection at bolted and welded connections in the Work. Examine the size, quality and placement of each connection to verify installation in accordance with Contract Documents and actioned shop drawings.

3.7 ADJUSTING

A. Procedures for Cleaning, Painting and Touch-Up: Immediately after erection, clean field welds, bolted connections, marred and abraded surfaces. Paint and touch-up paint with the specified paint system. Touch up galvanized surfaces in accordance with ASTM A780.

END OF SECTION

SECTION 05 80 00 – ARCHITECTURAL FORMED METALS

PART 1 - GENERAL

1.1 SUMMARY

A. General: Provide architectural formed metals in accordance with requirements of the Contract Documents.

B. Related Work Specified Elsewhere

1. Non-architectural metal fabrications specified in Section 05 50 00 “Metal Fabrications”.

2. Finish painting is specified in Section 09 90 00 “Paints and Coatings”.

1.2 REFERENCES

A. General: Comply with the applicable provisions of the referenced standards except as modified by governing codes and the Contract Documents. Where a recommendation or suggestion occurs in the referenced standards, such recommendation or suggestion shall be considered mandatory. In the event of conflict between referenced standards, this specification or within themselves, the more stringent standard or requirement shall govern.

1. American Architectural Manufacturers Association (AAMA)

a. AAMA 2605 "Voluntary Specification, Performance Requirements and Test Procedures for Pigmented Organic Coatings on Aluminum Extrusions and Panels".

2. American Welding Society (AWI)

a. AWS D1.1 "Structural Welding Code - Steel".

b. AWS D1.3 "Structural Welding Code - Sheet Steel".

c. AWS D1.6 "Structural Welding Code - Stainless Steel".

3. National Association of Architectural Metal Manufacturers (NAAMM)

a. NAAMM "Metal Finishes Manual".

4. Industrial Fasteners Institute (IFI): "Fastener Standards Book."

1.3 SYSTEM DESCRIPTION

A. Performance Requirements

1. General: Comply with the performance requirements and criteria as specified:

a. Structural Performance: Provide for architectural metal panels capable of withstanding design loads of the Work within limits and under conditions indicated and as follows:

1) Structural requirements shall be as indicated on project structural contract document requirements.

2. Expansion and Contraction: Design, fabricate and install exterior architectural metal component parts to provide for expansion and

contraction of each assembly or system over an ambient temperature range of 120 deg. F. and a surface temperature range of 180 deg. F. without buckling, joint failure, undue stress on members or anchors, and other detrimental effects on any exterior architectural metal assemblies of systems or to contiguous work by others.

3. Design Modifications: Make design modifications of work shown only as may be necessary to meet performance requirements and coordinate the work. Variations in details and materials which do not adversely affect appearance, durability or strength shall be submitted for review. Maintain the general design concept without altering profiles and alignments shown.

1.4 SUBMITTALS

A. Product Data: Submit for Engineer's action. Furnish manufacturer's literature describing the general properties of each product to be used in the Work. Include, manufacturer's technical data documenting the primary function, quality and performance of each system and containing specification for each material, load tables, dimension diagrams and installation instructions, or other such information as required by the drawings and specifications.

B. Shop Drawings: Provide shop drawings for architectural metal work, including dimensioned plans and elevations drawn at a minimum scale of 1 in. = 1 ft. and details of sections, connections and anchorage drawn at a minimum scale of 3 in. = 1 ft. Indicate materials and profiles of each architectural metal member, fittings, joinery, finishes, fasteners, and accessory items.

1. Setting Drawings: Provide setting drawings and templates for the location of architectural metal items that are to be embedded in or anchored to concrete or masonry.

C. Samples: Label samples to indicate product, characteristics, and location in the Work. Samples will be reviewed for color and appearance only. Furnish sufficient samples to establish the full range of colors and textures for materials exposed in the finished work. Compliance with other requirements is the responsibility of the Contractor. Provide the following:

1. Metal Panel System: 24 in. square sample complete with frame and specified finish.

2. Each finish of each metal on the gage and alloy to be used in the final work, 3 in. x 4 in.

3. Typical welded corner and butt joints.

4. Other specified items as requested.

D. Closeout Submittals: Submit the following:

1. Maintenance Manual: Submit two (2) copies of a bound maintenance manual, describing the materials, and procedures for cleaning and maintaining each metal type. Include manufacturer's data describing the materials and finishes used in the work.

E. Special Warranty Organic (Powder) Coated Finish: Provide a written Manufacturer's Warranty for a period of (5) five years, warranting that the

organic (powder) coated finish will not fade, stain or discolor excessively or to a non-uniform appearance, and will not corrode, crack, craze, peel, or deteriorate due to weather and atmospheric exposure. Upon notification of defects, within the warranty period, make the necessary replacements at the convenience of the City of New York.

1.5 QUALITY ASSURANCE

A. Qualified Installer: The entity performing the work of this section must, within the last five (5) consecutive years prior to the bid opening have successfully completed in a timely fashion at least three (3) projects similar in scope, size and type to the required work.

B. Single Source Responsibility: Obtain each architectural metal system from one source of a single fabricator/manufacturer. Obtain accessory products used in conjunction with architectural metal from the architectural metal fabricator/manufacturer or from sources acceptable to the architectural metal fabricator/manufacturer. The fabricator/manufacturer shall must, for the past five (5) years, have been regularly engaged in the manufacture of material or equipment similar in type to that required for this Project. Such material or equipment provided by the manufacturer must have been in satisfactory service for not less than five (5) years.

C. Regulatory Requirements: Comply with applicable requirements of the laws, codes, ordinances and regulations of Federal, State and Municipal authorities. Obtain necessary approvals from the NYC Building Department.

D. Mock-Ups

1. Provide mock-ups of the following items consisting of all the specified components of sizes as shown:

a. Metal Panel System: One full height panel, full panel width.

1) Mock up shall include all components for one full panel and as indicated on drawings for mock-up requirements.

2. Alter or revise mock-ups, as directed, to obtain the approval of the Design consultant. The approved mock-up(s) shall serve as a standard of quality for specified item(s) for the project and may remain as a permanent part of the Work if in same condition as new at time of final acceptance.

E. Pre-Installation Meetings: Prior to the start of the Work, meet at the Project site to review methods and sequence of architectural metal installation, special details and conditions, standard of workmanship, testing and quality control requirements, job organization and other pertinent topics related to the Work.

1.6 DELIVERY, STORAGE AND HANDLING

A. Packing, Shipping, Handling, and Unloading: Deliver architectural metal work fully sealed and identified.

B. Storage and Protection: Store indoors, above the floor, protected from construction activities and other sources of damage. Protect from damage

from any source. Provide removable protection as required.

PART 2 - PRODUCTS

2.1 METAL MATERIALS

A. General:

1. Metal Surfaces: For the fabrication of architectural metal work which will be exposed to view, use only materials which are smooth and free of surface blemishes. Do not use materials which have stains and discolorations including welds which do not match the material, or do not match the Design consultant's sample in color and grain characteristics.

2. Surface Flatness and Edges: For exposed work provide materials which have been cold-rolled, cold-finished, cold-drawn, extruded, stretcher leveled, machine cut and otherwise produced to the highest commercial standard for flatness with edges and corners sharp and true to angle or curvature as required.

3. Alloys and Tempers: Wherever alloys or tempers of metals are not shown or specified, or are shown or specified only by series or other general designation, provide the specific alloy which will weld and machine properly, and will finish to match the Design consultant's sample and other work in the same area, which is shown or specified to have the same finish. Use the temper or hardness which will provide the greatest strength and durability, consistent with necessary forming, fabrication and finishing processes.

B. Stainless Steel

1. AISI Type 316.

a. Plate and Sheet: ASTM A666, Stretcher level sheets.

b. Bar Stock: ASTM A276.

c. Tubing: ASTM A554, Grades MT 301, MT 302, or MT 304, as standard with manufacturer.

d. Pipe: ASTM A312, Grade TP 304.

C. Steel

1. Structural Steel Shapes: ASTM A36.

2. Steel Pipe: ASTM A53, Type S, Grade B, suitable for close coiling, black finish unless galvanizing is required; standard weight (Schedule 40), unless otherwise indicated or required to satisfy performance criteria.

3. Steel Bars and Bar Size Shapes: ASTM A675, Grade 65, or ASTM A36.

4. Steel Wire: ASTM A510.

2.2 FASTENER AND ANCHORAGE MATERIALS

A. Fasteners: Stainless steel type 316, type and size best suited for its intended

use. Where exposed in finished surfaces, use oval-head countersunk Phillips heads with head diameter one screw size larger than the shank diameter. Material and finish to match adjacent surfaces. Where fasteners screw-anchor into material less than 1/8 in. thick reinforce the interior surface with non-magnetic type stainless steel to receive screw threw threads or provide manufacturer's standard non-corrosive pressed-in splined grommet nuts. Provide fasteners meeting the requirements of IFI standards.

B. Anchors and Inserts: Provide anchors and inserts for attachment of architectural items to masonry and concrete. Anchors and inserts shall be non-corrosive and compatible with contiguous metals.

C. Welding Electrodes: Type and alloy recommended by the producer of the metal to be welded and as required for color match, strength and compatibility in the fabricated items.

2.3 PAINT AND COATING MATERIALS

A. Dielectric Separator: Cold applied, asphalt emulsion type complying with ASTM D1187, non-sagging, resistant to severe corrosion conditions; applied in two coats for an overall minimum dry film thickness of 25 mils or heavy coating of epoxy paint in minimum 2.0 mil dry film thickness.

2.4 FABRICATION

A. Field Measurements: Prior to fabrication, verify dimensions and conditions at the job site so that architectural metal work will accurately fit to adjacent work.

B. Forming: Form work to true shapes, without distortion, with accurate surfaces and edges. Unless otherwise shown, form metal corners by bending to smallest radius possible without impairing the work. Produce flat, flush surfaces without cracking or grain separation at bends. Machine cut or saw material for butt jointed or square corners. Form simple and compound curves by bending members in jigs to produce uniform curvature for each repetitive configuration required; maintain profile of member throughout entire bend without buckling, twisting, or otherwise deforming exposed surfaces of components.

C. Assembly: Carefully fit and assemble all work with continuity of line and design, using rigidly secured joints with hairline contact, unless otherwise shown. Form butt hairline joints with roll-over edge exposed. Grind off roll-over edge flush with and matching of adjacent metal. Shop assemble all work. Disassemble units too large for shipment and provide them with alignment and splice plates for accurate field fit. Build in straps, plates, and brackets as needed to support and anchor fabricated items to adjoining construction. Reinforce formed-metal units as needed to attach and support other construction.

D. Welding: Weld with electrodes and by methods recommended by the base metal manufacturer, and in accordance with applicable recommendations of the AWS, to avoid distortion or discoloration of exposed faces. Make welds continuous unless otherwise shown. Grind exposed welds flush, to match adjacent metal. Bevel cut base metal before welding to maintain continuity of line at joints.

E. Reinforcing: Reinforce members and joints with structural shapes and plates in concealed locations, as necessary for adequate strength and rigidity.

F. Fastenings: Provide concealed fastenings unless otherwise shown. Locate necessary exposed fastenings in an orderly pattern, in accordance with reviewed shop drawings.

G. Dissimilar Metals: Separate dissimilar metals with dielectric separator to prevent galvanic action. Do not extend coatings onto exposed surfaces.

H. Protection of Finishes Prior to Shipment: Prior to shipment protect finishes on exposed surfaces from damage by application of strippable temporary protective covering or other means.

2.5 METAL PANEL SYSTEM

A. Metal Panel System (**MPS-01**): Provide stainless steel (type 316) metal panel system of dimensions, thicknesses and at locations indicated on drawings. Provide stainless steel panels, support frames, brackets and all hardware required for complete installation. Provide metal panel systems by one of the following:

1. Metalwerks by Metal Sales & Service Inc.
   200 Gale Ln.
   Kennett Square, PA

2. M.G. McGrath
   1387 East Cope Avenue
   Maplewood, MN

3. A. Zahner Company
   1400 East 9th Street
   Kansas City, MO

4. Or equal as approved by Engineer.

B. Metal Panel System (**MPS-02**): Provide stainless steel (type 316) metal panel system of dimensions, thicknesses and at locations indicated on drawings. Provide stainless steel panels, support frames, brackets and all hardware required for complete installation.

1. Basis of Design for panel component of **MPS-02** metal panel system:

   a. “7DL” with 2B finish as manufactured by Rigidized Metals but not intended to imply a preference for a specific manufacturer.

   b. Other manufacturers include the following:

      i. Moz Metals.

      ii. Ferguson Perforating

      iii. Or equal as approved by Engineer.

2. Provide metal panel systems **MPS-02** by one of the following:

   a. Metalwerks by Metal Sales & Service Inc.
      200 Gale Ln.
      Kennett Square, PA

b. M.G. McGrath
1387 East Cope Avenue
Maplewood, MN

c. A. Zahner Company
1400 East 9th Street
Kansas City, MO

d. Or equal as approved by Engineer.

C. Metal Panel System (**MPS-03**): Provide stainless steel (type 316) metal panel system of dimensions, thicknesses and at locations indicated on drawings. Provide stainless steel panels, support frames, brackets and all hardware required for complete installation. Provide metal panel systems by one of the following:

1. Metalwerks by Metal Sales & Service Inc.
200 Gale Ln.
Kennett Square, PA

2. M.G. McGrath
1387 East Cope Avenue
Maplewood, MN

3. A. Zahner Company
1400 East 9th Street
Kansas City, MO

4. Or equal as approved by Engineer.

D. Metal Panel System (**MPS-04**): Provide stainless steel (type 316) metal panel system of dimensions, thicknesses and at locations indicated on drawings. Provide stainless steel panels, support frames, brackets and all hardware required for complete installation. Provide metal panel systems by one of the following:

1. Metalwerks by Metal Sales & Service Inc.
200 Gale Ln.
Kennett Square, PA

2. M.G. McGrath
1387 East Cope Avenue
Maplewood, MN

3. A. Zahner Company
1400 East 9th Street
Kansas City, MO

4. Or equal as approved by Engineer.

2.6 METAL TRIM SYSTEM

A. Metal Trim System (**MTS-01**): Provide stainless steel (type 316) metal trim system of dimensions, thicknesses and at locations as indicated on drawings. Provide stainless steel trim, support frames, brackets and all hardware required for complete installation.

1. As indicated on Drawings.

a. Stainless steel imbeds, structural attachment components, and fasteners as required for complete installations.

2.7 MISCELLANEOUS ARCHITECTURAL METAL TRIM

A. Miscellaneous Items: Provide other items of architectural metal, exposed to view in the finished work, that is not included in other work.

B. Steel Trim: Provide stainless steel trim, exposed to view in the finished Work, fabricated from longest lengths available, 16 gauge minimum stainless steel sheet material unless noted otherwise. Form trim to profiles and dimensions shown, complete with concealed fastening devices and finished on exposed surfaces with a **MTL-04** metal finish, unless otherwise specified or shown.

2.8 MISCELLANEOUS ARCHITECTURAL METALWORK

A. Miscellaneous Items: Provide other items of architectural metal, exposed to view in the finished work that is not included in other work.

B. Stainless Steel Trim: Provide stainless steel trim, exposed to view in the finished work, fabricated from longest lengths available, 18 gauge minimum stainless steel sheet material unless noted otherwise. Form trim to profiles and dimensions shown, complete with concealed fastening devices and finished on all exposed surfaces with a **MTL-04** metal finish, unless otherwise specified or shown.

C. Corner Guards: Stainless Steel Corner Guard Fabricated from min. 16 ga. thick, type 316 stainless steel with No. 4 brushed finish, 3-1/2 in. x 3-1/2 in high with counter sunk phillips head stainless steel fasteners; 54 inches high unless otherwise shown.

2.9 METALWORK AND FINISHES

A. General: As shown for the respective units and matching the reviewed samples. Remove scratches, abrasions, dents, die markings and other defects prior to finishing operations. Perform this work in addition to finish treatment specified. Comply with NAAMM "Metal Finishes Manual" for finish designations and application recommendations unless otherwise specified.

B. Stainless Steel Metalwork and Finishes

1. (**MTL-04**): No. 4 (bright directional polish). Grain direction as indicated on drawings. If direction not indicated, match adjacent.

C. Steel Metalwork and Finishes

1. Hot Dipped Galvanized finish.

D. Painted Ferrous Metalwork and Finish

1. Exposed surfaces shall receive hot dipped galvanized finish with high-performance paint.

2. General for painted Ferrous Metal: Hot-dipped galvanize and shop paint steel shapes and plates, except members or portions of members to be embedded in concrete, and edges to be field welded.

   a. Removal of Oil, Grease and Similar Contaminants: Remove oil, grease and similar contaminants in accordance with SSPC SP-1 "Solvent Cleaning", prior to any additional surface preparation specified.

   b. Metal Surfaces: Clean and prepare metal surfaces before applying shop coat. Remove rust and mill scale in accordance with SSPC SP-3 "Power Tool Cleaning".

   c. Application of Primer: Immediately after surface preparation, apply primer in accordance with manufacturer's instructions. Use painting methods which will result in full coverage and dry film thickness specified.

PART 3 - EXECUTION

3.1 GENERAL

A. Manufacturer's Instructions: Prepare substrates and install the work of this Section, including equipment, components, and accessories in accordance with the manufacturer's instructions, except where more stringent requirements are shown or specified, and where project conditions require extra precautions or provisions to ensure satisfactory performance of the Work.

3.2 EXAMINATION

A. Verification of Conditions: Examine the areas to receive the Work and the conditions under which the Work would be performed. Contractor shall remedy conditions detrimental to the proper and timely completion of the Work. Do not proceed until unsatisfactory conditions have been corrected.

B. Verify dimensions of supporting structure by field measurements so that architectural metal work will be accurately designed, fabricated and fitted to the structure. Tolerances for supporting structure are specified in other Sections.

3.3 PREPARATION

A. Substrate Acceptability: Commencement of installation shall constitute acceptance of substrate conditions by the Installer.

B. Coordination: Coordinate architectural metal work with the adjacent work of other sections. Provide items to be placed during the installation of other work at the proper time to avoid delays. Coordinate placement of such items, including inserts and anchors, accurately in relation to the final location of architectural metal work.

3.4 INSTALLATION: GENERAL

A. Dimensions shown on Drawings are based on an assumed design temperature of 70 deg. F. Fabrication and erection procedures shall take into account the ambient temperature range at the time of the respective operations.

B. Procedures: Perform all cutting, drilling and fitting required. Install work in locations shown, plumb, level and in line with adjacent materials where required. Provide fastenings as shown on shop drawings, and as necessary for a rigid, secure and permanent installation. Make provisions for removable items.

1. Fasten to metal with bolts or machine screws threaded full length of the shank, with lock nuts on bolts.

2. Fasten to inserts in concrete or solid masonry, or use expansion bolts. Fasten to hollow masonry units with toggle bolts. Drill holes for bolts no larger than shank diameter.

C. Formation of Joints: Form tight joints with exposed connections accurately and uniformly fitted together. Do not cut or abrade finishes which cannot be completely restored in the field. Return items with such finishes to the shop for required alterations, followed by complete refinishing.

D. Corrosion Protection: Coat concealed surfaces of aluminum that will be in contact with grout, concrete, masonry, wood, or dissimilar metals, with a heavy coat of specified dielectric separator.

E. Metal Panel System: Comply with fabricator's written instructions and recommendations for installation and as follows:

1. Anchor metal panel system to properly prepared substrate as recommended intervals indicated on drawings. Adjust metal panels to achieve level and plumb installation.

2. Anchor metal panel system to framing utilizing appropriate fastening devices for the substrate.

3. Provide brackets and supports at locations recommended by the fabricator.

4. Install door, window, and closure panels as indicated on drawings.

F. Installation of Closures and Trim: Form closures and trim members from stainless steel sheet metal of type and minimum nominal thickness as indicated. Incorporate components required for support and installation of closures and trim. Fabricate closures and trim to tightly close with adjoining construction.

G. Provide concealed fasteners at all locations. Size fasteners to support ornamental metal Work, with fasteners spaced to prevent buckling or waviness in finished surfaces. Drill and tap holes required for securing Work to other surfaces.

H. Support joints with concealed stiffeners as required to hold exposed faces of adjoining units in flush alignment. Miter or cope trim members at corners to form tight joint.

I. Installation: Closures and Trim: Form closures and trim members from stainless steel sheet metal of type and minimum nominal thickness as indicated. Incorporate components required for support and installation of closures and trim. Fabricate closures and trim to tightly close with adjoining construction.

J. Provide concealed fasteners at all locations. Size fasteners to support work, with fasteners spaced to prevent buckling or waviness in finished surfaces. Drill and tap holes required for securing work to other surfaces.

K. Support joints with concealed stiffeners as required holding exposed faces of adjoining units in flush alignment. Miter or cope trim members at corners to form tight joint.

3.5 ADJUSTING

A. Touch-Up Painting: Field paint all marred or abraded shop paint and welds after cleaning these areas. Separate dissimilar metals and metals in contact with concrete or masonry with dielectric separator or gaskets. Do not extend coatings onto exposed surfaces.

3.6 PROTECTION

A. Protection: Upon completion of installation clean exposed metal surfaces as recommended by manufacturer and install protection. Protect finished surfaces against damage during subsequent construction operations and remove protection at time of substantial completion.

END OF SECTION

SECTION 06 15 00 – ROUGH CARPENTRY

PART 1 - GENERAL

1.1 SUMMARY

A. General: Provide rough carpentry in accordance with requirements of the Contract Documents.

1.2 REFERENCES

A. General: Comply with the applicable provisions of the referenced standards except as modified by governing codes and the Contract Documents. Where a recommendation or suggestion occurs in the referenced standards, such recommendation or suggestion shall be considered mandatory. In the event of conflict between referenced standards, this specification or within themselves, the more stringent standard or requirement shall govern.

1. American Forest & Paper Association (AFPA): “National Design Specification for Wood Construction”, and the "Manual for Wood Frame Construction".
2. American Wood Preserver' Association (AWPA)
    a. AWPA C1, “All Timber Products, Pressure Treatment (General Requirements)”.
    b. AWPA C2 “Lumber, Timbers, Bridge Ties and Mine Ties, Pressure Treatment”.
    c. AWPA C9 “Plywood-Preservative Treatment by Pressure Process”.
    d. AWPA C20: “Structural Lumber—Fire-Retardant Treatment by Pressure Process”.
    e. AWPA C27 “Plywood-Fire Retardant Treatment by Pressure Process”.
    f. AWPA M4 “Care of Preservative-Treated Wood Products”.
    g. AWPA P5, “Standard for Waterborne Preservatives”.
3. The Engineered Wood Association (APA): "Engineered Wood Construction Guide”.
4. National Institute of Standards and Technology, U.S. Dept. of Commerce (NIST)
    a. Voluntary Product Standard PS-20, "American Softwood Lumber Standards".
    b. Voluntary Product Standard PS-1, "Construction and Industrial Plywood".
5. National Lumber Grades Authority (NLGA): “Standard Grading Rules for Canadian Lumber”.

6. Northeastern Lumber Manufacturers Association (NLMA): “Standard Grading Rules for Northeastern Lumber”.

7. Southern Pine Inspection Bureau (SPIB): “Standard Grading Rules for Southern Pine Lumber”.

8. West Coast Lumber Inspection Bureau (WCLIB): “Standard No. 17: Grading Rules for West Coast Lumber”.

9. Western Wood Products Association (WWPA): “Western Lumber Grading Rules.”

1.4 SUBMITTALS

A. Product Data: Submit manufacturer's product data for each type of product and process specified in this section and incorporated into items of rough carpentry indicating component materials and dimensions and include construction and application details. Provide the following:

1. Data for wood-preservative treatment from chemical treatment manufacturer and certification by treating plant that treated materials comply with requirements. Indicate type of preservative used, net amount of preservative retained, and chemical treatment manufacturer's written instructions for handling, storing, installing, and finishing treated material.

2. Data for fire-retardant treatment from chemical treatment manufacturer and certification by treating plant that treated materials comply with requirements. Include physical properties of treated materials, both before and after exposure to elevated temperatures when tested according to ASTM D5516 and ASTM D5664. For products receiving a waterborne treatment, include statement that moisture content of treated materials was reduced to levels specified before shipment to Project site.

3. Include copies of warranties from chemical treatment manufacturers for each type of treatment specified.

B. Quality Control Submittals

1. Certifications

a. Certification of Wood Preservative Treatment: Certification stating compliance with specified standards, type and name of preservative solution used, pressure process utilized, retention in pounds per cu. ft. of lumber treated, and that the treated material conforms to paintability, drying time and surface deposit requirements of FS TT-W- 572, and for waterborne preservative treated materials, the moisture content upon shipment from the treating plant does not exceed 15%.

b. Certification of Fire Retardant Treatment: Certification stating name of fire retardant materials used, compliance with local building code requirements and with AWPA Specification C1 and C20 for lumber and C27 for plywood, and that fire retardant materials will not bleed through painted surfaces.

c. Structural Lumber: Certification that lumber complies with minimum allowable unit stresses. List the lumber species and grade selected for each use, including the design values for each species and grade, together with evidence of compliance with specified requirements.

1.5 QUALITY ASSURANCE

A. Single-Source Responsibility:

1. Fire Retardant Treated Wood: Obtain each type of fire-retardant-treated wood product from one source for both treatment and fire-retardant formulation.

2. Wood Preservative Treatment: Obtain each type of wood preservative treated wood product from one source for both treatment and wood preservative formulation.

B. Regulatory Requirements: Comply with applicable requirements of the laws, codes, ordinances and regulations of Federal, State and Municipal authorities. Obtain necessary approvals from the NYC Building Department.

1. Fire Retardant Treated Wood: Treat those items required by Building Code to be treated and those items shown or specified as "Fire Retardant Treated Wood".

1.6 DELIVERY, STORAGE AND HANDLING

A. Storage and Protection: Keep rough carpentry work under cover and dry during delivery, storage and installation, and until finish is applied and building is enclosed. Protect against exposure to weather and contact with damp or wet surfaces. Provide for air circulation in stacks of lumber and plywood.

PART 2 - PRODUCTS

2.1 WOOD MATERIALS

A. General

1. Grading Standards: Provide wood products graded and mill-stamped by the applicable grading agency to certify conformance with the specified standards.

a. Lumber Grading: Comply with "Simplified Practice Recommendations PS-20, American Softwood Lumber Standards" by U.S. Department of Commerce, and with the applicable lumbermen's association rules under which each species of lumber is produced.

b. Plywood Grading: Comply with PS-1 "U.S. Product Standard for Construction & Industrial Plywood" (ANSI A199.1).

2. Grade Marking: Factory mark each piece of lumber with the official grade mark of the appropriate association or authorized inspection service under whose rules the lumber is graded.

3. Sizes and Patterns: Provide lumber which is dressed S4S and worked to such patterns as shown or specified. Dimensions on Drawings designate the nominal undressed size of the item.

4. Moisture Content: Provide lumber which has been seasoned by air drying or kiln drying to a moisture content not to exceed 19%.

B. Lumber

	USE	GRADE	SPECIES
1.	Grounds, nailers, blocking, cants, sleepers, furring	No. 2	Douglas Fir, Southern Pine, or Cedar

C. Plywood

	USE	GRADE	SPECIES
1.	Equipment Backerboards	APA B-C Exposure 1	Group 2
2.	Mirror Backerboards	APA B-C Exterior	Group 1
3.	Countertop Underlayment	APA Marine Grade B-B	Group 1

2.2 ANCHORS, FASTENERS AND HARDWARE

A. Anchors and Fasteners: Where rough carpentry is exposed to weather, in ground contact, contiguous with roofing systems or in area of high relative humidity, provide fasteners of Type 304 stainless steel.

1. Bolts, Nuts, Studs and Washers: Steel bolts complying with ASTM A307, Grade A; with ASTM A563 hex nuts and, where indicated or required, flat washers.

2. Expansion Anchors: Anchor bolt and sleeve assembly of material indicated below with capability to sustain, without failure, a load equal to six times the load imposed when installed in unit masonry and equal to four times the load imposed when installed in concrete:

   a. Interior Material: Carbon-steel components zinc-plated to comply with ASTM B633, Class Fe/Zn 5. Exterior Material: Alloy Group 1 or 2 stainless-steel bolts complying with ASTM F593 and nuts complying with ASTM F594.

3. Lag Screws and Bolts: FS FF-B-561; Stainless steel for exterior use, hot dipped galvanized for interior, type and grade best suited for the purpose.

4. Nails: FS FF-N-105; type and size best suited for the purpose. Stainless steel for exterior use, hot dipped galvanized for interior.

5. Toggle Bolts: FS FF-B-588; type and class best suited for the purpose.

6. Wood Screws: FS FF-S-111; style best suited for the purpose. Stainless steel for exterior use, hot dipped galvanized for interior.

7. Powder-Driven Fasteners: May be used if permitted by code.

B. Steel Plates and Shapes: ASTM A36, stainless steel for exterior use, hot dipped galvanized for interior use unless otherwise shown or specified.

2.3 PRESERVATIVE TREATMENT

A. Preservative Treated Wood: Where lumber or plywood is indicated as preservative treated or is specified to be treated, or required to be treated, comply with applicable requirements of AWPA C2 (lumber) and AWPA C9 (plywood). Mark each treated item with the AWPB or SPIB Quality Mark Requirements.

B. Wood to be Treated: Where lumber or plywood is indicated as preservative-treated wood or as follows:

1. Wood embedded in or in contact with either concrete, masonry or plaster.
2. Wood plates, cants, curbs, cleats and nailing strips in connection with waterproofing, roofing and flashing.
3. Wood framing members less than 18 in. above grade.

C. Treatment: Pressure treat in a closed retort by vacuum-pressure process in compliance with AWPA C-2 for lumber and AWPA C-9 for plywood.

1. Pressure treat aboveground items with preservatives to a minimum retention of 0.25 lb/cu. ft. After treatment, kiln-dry lumber and plywood to a maximum moisture content of 19 and 15 percent, respectively.
2. Pressure treat wood members in contact with ground or freshwater with preservatives to a minimum retention of 0.40 lb/cu. ft.
3. Procedures for Wood Before Treatment: Complete fabrication of treated items prior to treatment, where possible. If cut after treatment, coat cut surfaces to comply with AWPA M4. Inspect each piece of lumber or plywood after drying and discard damaged or defective pieces.
4. Procedures for Kiln Drying: Kiln–dry woodwork after treatment to levels required for untreated woodwork. Maintain moisture content required by kiln drying before and after treatment
5. For exposed items indicated to receive a stained or natural finish, use chemical formulations that do not require incising, contain colorants, bleed through, or otherwise adversely affect finishes.

D. Manufacturers: Subject to compliance with requirements, provide products by one of the following:

1. Chemical Specialties, Inc.
2. Hickson Corp.
3. Hoover Treated Wood Products, Inc.
4. Osmose Wood Preserving, Inc.
5. Or approved equal.

2.4 FIRE RETARDANT TREATED WOOD

A. Materials: Fire retardant materials shall meet the requirements of AWPA P10.

B. Treatment: Pressure treat to meet building code requirements and requirements of AWPA C1 and C20 for lumber and C27 for plywood. After fire retardant treatment, kiln dry to the moisture content specified. Do not use colorants in solution to distinguish treated lumber from untreated lumber. Guarantee fire retardant materials not to bleed through painted finish or natural finish. Provide the following:

C. Interior Fire Retardant Treatment: For interior use where relative humidity is normally below 80%; Low-Hygroscopic Formulation; interior Type A per AWPA C20. Provide fire retardant treatment from one of the following:

1. "D-Blaze" (J. H. Baxter Co.).□
2. "D-Blaze" (Chemical Specialties, Inc.).□
3. "Pyro-guard" (Hoover Treated Wood Products).□
4. "Dricon" (Hickson Corp.).□
5. Or approved equal.□

D. Procedures for Wood Before Treatment: Fabricate and mill wood before treatment wherever possible, and disassemble for treatment, so that cutting and jointing will not be required after treatment. Apply a heavy brush coat of the same fire retardant chemicals to any surfaces which are cut after treatment.

E. Procedures for Kiln Drying: Kiln–dry woodwork after treatment to levels required for untreated woodwork. Maintain moisture content required by kiln drying before and after treatment.

F. For exposed items indicated to receive a stained or natural finish, use chemical formulations that do not require incising, contain colorants, bleed through, or otherwise adversely affect finishes.

PART 3 - EXECUTION

3.1 GENERAL

A. Manufacturer's Instructions: Prepare substrates and install the work of this Section, including, components, and accessories in accordance with the manufacturer's instructions, except where more stringent requirements are shown or specified, and where project conditions require extra precautions or provisions to ensure satisfactory performance of the Work.

3.2 EXAMINATION

A. Verification of Conditions: Examine the areas to receive the Work and the conditions under which the Work would be performed. Remedy conditions detrimental to the proper and timely completion of the Work. Do not proceed until unsatisfactory conditions have been corrected.

3.3 PREPARATION

A. Substrate Acceptability: Commencement of installation shall constitute acceptance of substrate conditions by the Installer.

B. Coordination: Schedule the Work and coordinate with other trades. Furnish anchors, fastenings and other miscellaneous items required for securing carpentry to other construction. Whenever rough carpentry is fitted to other work, obtain measurements of such other work. Verify dimensions shown and the shop drawing details.

C. Discard units of material with defects that impair quality of rough carpentry construction and that are too small to use in fabricating rough carpentry with minimum joints or optimum joint arrangement.

3.4 INSTALLATION

A. General Workmanship: Set rough carpentry to required levels and lines, with members plumb and true to line and cut and fitted. Fit rough carpentry to other construction; scribe and cope as required for accurate fit. Correlate location of furring, nailers, blocking, grounds, and similar supports to allow attachment of other construction. Securely attach rough carpentry work to substrate by anchoring and fastening as indicated. Countersink nail heads on exposed carpentry work and fill holes. Select fasteners of size that will not penetrate members where opposite side will be exposed to view or will receive finish materials. Make tight connections between members. Install fasteners without splitting of wood; predrill as required.

B. Blocking and Nailers

1. Install wood nailers and blocking where shown and where required for attachment of other work. Form to shapes as shown and cut as required for true line and level of work to be attached. Coordinate location with other work involved.

2. Attach to substrates as required to support applied loading. Countersink bolts and nuts flush with surfaces, unless otherwise indicated. Build into masonry during installation of masonry work. Where possible, anchor to formwork before concrete placement.

C. Equipment Backerboards

1. Provide 3/4 in. thick fire-retardant treated plywood equipment backerboards in telephone and electrical equipment rooms and other locations as shown or required to mount equipment. Comply with local utility company requirements for equipment backerboards.

2. Secure to wall using proper fastening devices for substrates encountered, spaced 12 in. o.c. maximum at perimeter 2 in. from corners and three rows of 3 fasteners each in the backerboard field. Countersink fasteners flush with plywood surface. Butt adjacent panels without lapping. Prepare panels for finish painting as specified in Section 09 90 00 "Paints and Coatings".

D. Mirror Backerboards: Furnish 1/2 in. thick fire-retardant treated plywood mirror backerboards in toilet rooms and other locations as shown or required to mount mirrors.

E. Countertop Underlayment: Countertops underlayment to receive solid surfaces shall be primed and sealed on all surfaces and edges with materials compatible with the setting materials.

F. Repair of Treated Wood Surfaces

1. Apply two (2) heavy brush coats of same wood preservative material to surfaces exposed by sawing, cutting or drilling. Comply with AWPA M-4.

2. Apply heavy brush coat of same fire retardant chemicals to any surfaces which are cut after treatment.

G. Priming: Paint rough hardware and ferrous metal with one shop coat of specified paint. Paint fire retardant treated wood with one coat of alkyd type paint or a moisture transmission resistant sealer immediately after installation.

END OF SECTION

SECTION 07 13 00 – SHEET WATERPROOFING

PART 1 - GENERAL

1.1 SUMMARY

A. General: Provide sheet waterproofing and underslab vapor retarder in accordance with requirements of the Contract Documents.

B. Related Work Specified Elsewhere

1. Cast-in-place concrete work.
2. Wall construction is specified in Section 04 20 00 “Unit Masonry”.
3. Building insulation is specified in Section 07 21 00 “Building Insulation”.
4. Roofing is specified in Section 07 55 56 “Fluid-Applied Membrane Roofing”.
5. Protected roofing is specified in Section 07 55 66 “Vegetated Fluid-Applied Protected Membrane Roofing”.

1.2 REFERENCES

A. General: Comply with the applicable provisions of the referenced standards except as modified by governing codes and the Contract Documents. Where a recommendation or suggestion occurs in the referenced standards, they shall be considered mandatory. In the event of conflict between referenced standards, this specification or within themselves, the more stringent standard or requirement shall govern.

1. National Roofing Contractor's Association: The NRCA Roofing and Waterproofing Manual.

1.3 SUBMITTALS

A. Product Data: Submit for Engineer’s action. Submit manufacturer’s literature, specifications and installation instructions describing the general properties of each material and accessory to be used in the Work.

B. Shop Drawings: Submit for Engineer’s action. Submit project specific shop drawings for the fabrication and installation of the Work, including but not limited to the following: Prepare details at not less than 3 in. = 1 ft. minimum scale.

1. Penetrations, drains, and projections.
2. Details, including inside and outside corner reinforcements and terminations.
3. Crack and joint treatments, including expansion joints.
4. Interface with contiguous materials.

C. Quality Control Submittals: Submit for Engineer’s information:

1. Test Reports: Furnish test reports indicating and interpreting test

results of membrane waterproofing water testing.

2. Certificates:

a. Document Review: Before commencing work, submit a written statement signed by the Contractor and the Applicator certifying that the Contract Documents, shop drawings and product data have been reviewed with material manufacturers' qualified technical representatives and that they agree that the selected materials are proper, compatible with contiguous materials and adequate for the application shown.

D. Closeout Submittals

1. Warranties: Special warranties as specified.

1.4 QUALITY ASSURANCE

A. Qualified Installer/Applicator: The entity performing the work of this section must, within the last five (5) consecutive years prior to the bid opening have successfully completed in a timely fashion at least three (3) projects similar in scope, size and type to the required work.

B. Single-Source Responsibility: Obtain membrane waterproofing system from one source of a single manufacturer. Obtain accessory products used in conjunction with membrane waterproofing from the membrane waterproofing manufacturer or from sources acceptable to the membrane waterproofing manufacturer. The fabricator/manufacturer shall must, for the past five (5) years, have been regularly engaged in the manufacture of material or equipment similar in type to that required for this Project. Such material or equipment provided by the manufacturer must have been in satisfactory service for not less than five (5) years.

C. Regulatory Requirements: Comply with applicable requirements of the laws, codes, ordinances and regulations of Federal, State and Municipal authorities. Obtain necessary approvals from the NYC Building Department.

D. Pre-Installation Meeting: Prior to the start of the Work, meet at the Project site to review methods and sequence of membrane installation, special details and conditions, standard of workmanship, testing and quality control requirements, job organization and other pertinent topics related to the Work.

1.5 DELIVERY, STORAGE, AND HANDLING

A. Packing, Shipping, Handling, and Unloading: Deliver materials in manufacturer's unopened containers identified with name, brand, type, grade, class and other qualifying information. Deliver bulk materials with a certification from the manufacturer stating the name, type and grade of each product used. Furnish certificate accompanying each load (or furnish manufacturer's blanket certificate) for each bulk product used in the Work.

B. Storage and Protection: Store materials in a dry location, in a manner as to prevent damage or intrusion of foreign matter. Conspicuously mark "Rejected" on materials which have once been wet or damaged and remove from the job site.

1.6 PROJECT/SITE CONDITIONS

A. Requirements: Take necessary precautions against fire and other hazards during delivery, storage and installation of flammable materials specified herein. Comply with local ordinances and fire regulations in the installation of hazardous materials specified or required under this Section.

B. Weather Conditions: Proceed with sheet waterproofing and associated work only when weather conditions will permit unrestricted use of materials and adequate quality control of work being installed, in compliance with requirements and with recommendations of primary materials manufacturers.

1.7 WARRANTY

A. General: Warranties and guaranties specified in this Article shall not deprive the City of New York of other rights the City of New York may have under other provisions of the Contract Documents and are in addition to and run concurrent with other warranties and guaranties made by the Contractor under requirements of the Contract Documents.

1. Special Warranty: Provide a written warranty, signed by the Contractor, Installer and Manufacturer, for a two (2) year period, against leaks or other failures resulting from defects of materials or workmanship. Upon notification of defects, within the warranty period, make the necessary removals, repairs and replacements, at the convenience of the City of New York.

PART 2 - PRODUCTS

2.1 MATERIALS

A. Sheet Waterproofing Membrane System (**WPS-01**): Pre applied membrane, factory- made composite, specifically manufacturer for blind side applications, composed of high density polyethylene film, synthetic rubber adhesive and a protective coating, a detackifying surface treatment, an uncoated self-adhering side lap strip, and a release liner formed into uniform flexible sheets.

1. Products: Subject to compliance with requirements, provide the following:

a. "Preprufe 300R" (Grace Construction Products) .

b. “Colphene BSW (F)” (Soprema Inc.).

c. “Underseal Blindside” (Polyguard).

d. Or approved equal.

B. Sheet Waterproofing Membrane System (**WPS-02**): Self adhering membrane, minimum 60 mil thickness, composed of 56 mil (1.4mm) rubberized asphalt compound or SBS Modified bitumen factory laminated to a 4 mil (0.10mm) thick polyethylene film with release liner on adhesive side and formed into uniform flexible sheets. Provide one of the following:

1. "Bituthene 4000" (GCP Applies Technologies).

2. “Colphene 3000” (Soprema Inc.).

3. “Blueskin WP 200” (Henry Company).
4. "SealTight Mel-Rol" (W.R. Meadows, Inc.).
5. "CCW-MiraDRI 860/861" (Carlisle Coatings & Waterproofing).
6. Or approved equal.

C. Underslab Vapor Barrier (**VB-01**): ASTM E1745, Class A, min.15 mils, maximum 0.04 perms water vapor permeance. Include manufacturer's recommended adhesive or pressure-sensitive joint tape Provide one of the following:

1. “Vapor Block 15” (Raven Industries Inc.).
2. “Griffolyn Type T105” (Reef Industries, Inc.).
3. “Stego Wrap (15 mil)” (Stego Industries).
4. Or approved equal.

D. Insulation: Refer to Section 07 21 00 “Building Insulation”.

E. Water Pervious Fabric (Filter Fabric): Woven or nonwoven polypropylene, polyolefin, or polyester fabric mat, water permeable and resistant to UV degradation, of type and weight recommended by insulation manufacturer for application. One of the following:

1. "Confil Fabric, Grade No. D689H, Product Code No. 9206890" (International Paper Co.).
2. "Rufon P3B" (Phillips fibers, Inc.)
3. "Fabrene VIE" (Fabrene, Inc.)
4. "Trevira Type 0114" (Hoechst Celanese)
5. Or approved equal.

2.2 ACCESSORIES

A. Substrate Conditioners, Liquid Membrane, Primers, Patching Membranes, Sheet Strips, Mastics, Adhesives, Cleaners, Fillets, Internal and External Angles and Flashings: As recommended by the membrane manufacturer for the purpose intended and compatible with membrane, and with the materials to which it is bonded.

B. Detail Tape: Two-sided, pressure-sensitive, self-adhering reinforced tape, 4 in. wide, with a tack-free protective adhesive coating on one side and release film on self-adhering side.

C. Joint Tape: Two-sided, pressure-sensitive, self-adhering reinforced tape, 8 in. wide, with a tack-free protective adhesive coating on one side and release film on self- adhering side.

D. Metal Termination Bars: Aluminum bars, approximately 1 in. x 1/8 in. thick, predrilled at 9 in. centers.

E. Protection Board: Premolded, 1/8 in. thick for vertical surfaces and 1/4 in. thick for horizontal surfaces, semi-rigid board complying with ASTM D6506 Type 2 Class B consisting of mineral stabilized core sandwiched between

layers of asphaltsaturated felt, surface coated with asphalt and sealed to core under heat and pressure and provide with polyethylene film facings.

F. Nonwoven-Geotextile-Faced, Molded-Sheet Drainage Panel: Manufactured composite subsurface drainage panels consisting of a nonwoven, needle-punched geotextile facing with an apparent opening size not exceeding No. 70 sieve laminated to 1 side and a polymeric film bonded to the other side of a 3-dimensional, non-biodegradable, molded-plastic-sheet drainage core, with a vertical flow rate of 9 to 15 gpm/ft.

PART 3 - EXECUTION

3.1 GENERAL

A. Manufacturer's Instructions: Prepare substrates, apply primers and install the work of this Section, including (equipment, components, and) accessories in accordance with the manufacturer's instructions, except where more stringent requirements are shown or specified, and where project conditions require extra precautions or provisions to ensure satisfactory performance of the Work.

3.2 EXAMINATION

A. Verification of Conditions: Examine the areas to receive the Work and the conditions under which the Work would be performed. Remedy conditions detrimental to the proper and timely completion of the Work. Do not proceed until unsatisfactory conditions have been corrected.

B. Manufacturer’s Representation: The manufacturer of the sheet waterproofing membrane and the applicator shall inspect the first pour of concrete substrate to review the acceptability of the concrete for application of the waterproofing membrane system.

C. Verify that curing compounds or surface hardeners incompatible with membrane waterproofing system have not been used on concrete surfaces.

3.3 PREPARATION

A. Substrate Acceptability Commencement of installation shall constitute acceptance of substrate conditions by the Installer.

B. Cleaning of Substrate: Clean substrate of debris and deleterious material which would impair the Work. Patch cracks, voids and honeycombs to provide a smooth, structurally sound surface. Cut off high spots and grind smooth. Apply surface conditioners as required.

C. Piping, Conduit And Other Penetrations: Do not proceed with membrane waterproofing until drains, piping, conduit, vents, ducts and other projections through the substrate have been installed. Holes, honeycombs and cavities shall be pointed or filled and finished flush. Cut off high spots and grind smooth.

D. Treatment of Corners: Treat external and internal corners of substrate as shown and recommended.

3.4 INSTALLATION: SHEET MEMBRANE WATERPROOFING

A. Services Of The Manufacturer: At the start of the installation and periodically as work progresses provide the services of the manufacturer's technical representative at the job site as often as deemed necessary by the manufacturer to advise on phases of this work.

B. Priming, Cleaning and Treatment of Joints. Prime substrate surfaces. Remove dust and dirt from joints and cracks according to ASTM D4258. Treat non-moving cracks, penetrations, control joints and other joints in substrate with materials, methods and designs.

C. Seams: Follow recommended techniques for cleaning, seam, lap and splice areas, for the method and sequence of forming field joints in the membrane. Weld roll seams, with no gaps in adhesion. Seal membrane terminations, exposed edges of membrane terminations not concealed by metal counterflashings or ending in reglets and "T" joints with mastic sealant bead.

D. Flashing: Install flashing as shown or required, properly lapped and adhered in place. Flash pipes, conduits, sleeves, and other projections passing through membrane waterproofing and provide tight construction throughout. Use prefabricated boots or field-fabricated boots, fitted coverings, and other accessories as required. Where pipes or conduits pass through floor areas to be waterproofed or where floor drains occur in areas to be waterproofed, apply membrane waterproofing only after flashing around pipes, conduits and drains is in place. Lap flashing into the membrane with reinforcing strips provided as required.

E. Protection Board: Install protection board forming a continuous overall protective layer. Butt edges tightly, stagger end joints and cut to fit at intersecting surfaces

F. Water Cutoffs: Provide water cut-offs as required.

3.5 VAPOR RETARDER INSTALLATION

A. Install vapor barrier per manufacturer’s written instructions. Avoiding cutting or puncturing vapor barrier during reinforcement placement and concreting operations.

B. Do not place concrete over vapor barrier until breaks have been patched and sealed.

3.6 FIELD QUALITY CONTROL

A. Contractor’s Quality Control Responsibilities: Contractor is solely responsible for quality control of the Work.

3.7 CITY OF NEW YORK’S MONITORING ACTIVITIES

A. City of New York’s Testing Agency: A testing agency, engaged at the City of New York’s expense, will perform the following activities to monitor the Contractor’s Quality Control Program. The monitoring activities do not relieve the Contractor of responsibilities under the Contract.

B. Contractor's Assistance to the City of New York's Testing Agency: Furnish the City of New York's Testing Agency with access to the Work, materials and

facilities as required by the Agency. Provide adequate notice of construction activities to allow timely inspections and observation of Contractor tests, and be available for pre- installation meetings. Furnish the City of New York's Testing Agency with on-site office facilities.

C. The testing agency shall inspect and report on the following:

1. Field Seams: Inspection of the field seams to assure manufacturer's quality requirements are maintained throughout the installation period. Each field seam, shall be 100% inspected and a written report prepared by the testing agency shall be submitted.

2. Membrane Adhesion: Inspection of the membrane to verify full membrane adhesion to the substrate including inspection of inside and outside corners and to assure manufacturer's quality requirements are maintained throughout the installation period.

3.8 PROTECTION

A. General: Protect sheet waterproofing from damage during construction period so that it will be without indication of abuse or damage at time of acceptance. Protect the building and adjacent construction from damage resulting from spillage, dripping and dropping of materials. Repair and restore other work damaged during sheet waterproofing operations. Prevent materials from running into and clogging drains.

B. Insulation over Waterproofing: Where insulation occurs over waterproofing install to assure complete coverage.

END OF SECTION

SECTION 07 23 00 – BUILDING INSULATION

PART 1 - GENERAL

1.1 SUMMARY

A. General: Provide building insulation in accordance with requirements of the Contract Documents.

B. Related Work Specified Elsewhere

1. Wall insulation as part of wall construction is specified in Section 04 20 00 “Unit Masonry”.

2. Roof insulation as part of roofing construction is specified in Section 07 55 56 “Fluid Applied Membrane Roofing”.

3. Roof insulation as part of roofing construction is specified in Section 07 55 66 “Vegetated Fluid Applied Protected Membrane Roofing”.

4. Mechanical equipment, piping and ductwork insulations are specified in Division 21, 22 and 23 specification sections.

1.2 REFERENCES

A. General: Comply with the applicable provisions of the referenced standards except as modified by governing codes and the Contract Documents. Where a recommendation or suggestion occurs in the referenced standards, such recommendation or suggestion shall be considered mandatory. In the event of conflict between referenced standards, this specification or within themselves, the more stringent standard or requirement shall govern.

1.3 SYSTEM DESCRIPTON

A. Performance Requirements:

1. Fire Resistive Rating: Identify materials with appropriate markings of applicable testing and inspecting agency.

a. Where materials are required by law or are specified to have a fire resistive rating, provide materials, accessories and application procedures which have been listed by UL or tested according to ASTM E814/UL 1479 to achieve the rating required.

b. Surface-Burning Characteristics: ASTM E84. Where specified or required provide the following maximum flame spread and smoke developed ratings when materials are tested in accordance with ASTM E84:

1) Unfaced material will have a maximum flame spread and smoke-developed of 0.

2) Faced material will have maximum flame spread and smoke- developed of 25 and 0 respectively.

c. Combustibility: Glass, slag-wool-fiber/rock-wool-fiber insulations shall be rated as non combustible as defined by

NFPA standard 220 when tested in accordance with ASTM E136.

2. Fungi Resistance: Blanket and/or Batt Insulation and facing shall be fungi resistant when tested in accordance with ASTM C1338 “Standard Test Method for Determining Fungi Resistance of Insulation Materials and Facings”.

1.4 SUBMITTALS

A. Product Data: Submit for Engineer’s action. Submit manufacturer’s literature specifications, and installation instructions describing the general properties of each material and accessory to be used in the Work.

B. Closeout Submittals Submit for City of New York’s documentation.

1. Warranties: Special warranties as specified.

1.5 QUALITY ASSURANCE

A. Single-Source Responsibility for Insulation Products: Obtain each type of building insulation from a single source with resources to provide products complying with requirements indicated without delaying the Work.

B. Regulatory Requirements: Comply with applicable requirements of the laws, codes, ordinances and regulations of Federal, State and Municipal authorities. Obtain necessary approvals from the NYC Building Department.

C. Pre-Installation Conference: Prior to the start of the Work, meet at the Project site to review methods and sequence of building insulation installation, special details and conditions, standard of workmanship, quality control requirements, job organization and other pertinent topics related to the Work.

1.6 DELIVERY, STORAGE, AND HANDLING

A. Packing, Shipping, Handling, and Unloading: Deliver insulation materials in manufacturer's unopened containers or packages, fully identified with trade name, type, class, and other identifying information.

B. Storage and Protection: Store above grade and protect from weather and damage. Do not allow insulation to become wet, soiled, or covered with ice or snow. Protect insulation from exposure to high temperatures, excessive exposure to sunlight, and contact with hot surfaces in excess of the safe temperature indicated by the manufacturer

C. Extruded Polystyrene Insulation Exposure: Prohibit exposure of extruded polystyrene board insulation to sunlight except to extent necessary for period of installation and concealment. Protect against ignition at all times.

1.7 WARRANTY

A. General: Warranties specified in this Article shall not deprive the City of New York of other rights the City of New York may have under other provisions of the Contract Documents and are in addition to and run concurrent with other warranties made by the Contractor under requirements of the Contract Documents.

1. Special Warranty: Upon completion of the work, provide the extruded polystyrene insulation manufacturer's fifteen (15) year warranty

stating that the thermal resistance of the extruded polystyrene insulation will not vary more than 10% from its published value.

PART 2 - PRODUCTS

2.1 MATERIALS

A. Extruded Polystyrene Board Insulation (**INS-01**): Rigid, closed-cell extruded expanded polystyrene with integral high density skin complying with ASTM C578, Type VI, minimum compressive strength of 40 psi, minimum R-Value of 5.0 per 1 in. thickness at 75 deg. F.; manufacturer's standard sizes; thickness as shown; with channeled edges; one of the following:

1. "Styrofoam RoofMate" (The Dow Chemical Co.).
2. "Foamular 400 XPS" (Owens-Corning Corp.).
3. "CertiFoam 40" (DiversiFoam Products).
4. "GreenGuard CM Insulation Board" (Pactiv Building Products).
5. Or approved equal.

B. Extruded Polystyrene Board Insulation (**INS-02**): Rigid, closed-cell extruded expanded polystyrene with integral high density skin complying with ASTM C578, Type VII, minimum compressive strength of 60 psi; minimum R-Value of 5.0 per 1 in. thickness at 75 deg F. standard sizes; thickness as shown; with channeled edges; one of the following:

1. "Styrofoam PlazaMate" (The Dow Chemical Co.).
2. "Foamular 604" (Owens-Corning Corp.).
3. "CertiFoam Plaza Deck" (DiversiFoam Products).
4. Or approved equal.

C. Semi-Rigid Insulation Board for Use in Exterior Enclosure Vertical Cavities (**INS-03**): Water repellant mineral wool fiber insulation made from basalt rock and slag for specific use as cavity wall insulation and thermo-setting resins complying with ASTM C612, Type IVB;; minimum R-Value of 4.3 at 75 deg F.; non-corrosive to steel, fungi resistant, flame spread rating of 0 smoke developed 0 or less when tested in accordance with ASTM E84; a moisture resistance of 0.07% when tested in accordance with ASTM C1104; manufacturer's standard sizes in dark color if available; thickness shown. Provide one of the following

1. "CavityRock DD” (Rockwool).
2. "Rainbarrier HD” (Thermafiber).
3. “Cladstone” (Johns Manville).
4. Or approved equal.

2.2 ACCESSORIES

A. Adhesive for Bonding Insulation: Type recommended by insulation manufacturer and having fire resistance characteristics similar to that of the

insulation.

B. Cavity Wall Insulation Adhesive: As recommended by the cavity wall insulation manufacturer, compatible with contiguous substrates and materials.

C. Sealer and Tape: Type recommended by insulation manufacturer and having perm rating and fire resistance characteristics similar to that of the insulation.

D. Welded or Adhesively Attached Mechanical Fasteners: Stainless steel fasteners consisting of a perforated stainless steel plate and stainless steel prongs or spindles and self-locking washer; length to suit depth of insulation shown; Where spindles will be exposed to human contact after installation, protect ends with capped self-locking washers; Provide one of the following:

1. "Tactoo Insul-Hangers" (AGM Industries, Inc.).
2. "Insulation Hangers" (Gemco).
3. “Stic-Klip Type N Fasteners” (Eckel Industries of Canada).
4. Or approved equal.

E. Insulation Standoff: Spacer fabricated from stainless steel sheet for fitting over spindle of insulation anchor to maintain air space between face of insulation and substrate to which anchor is attached where indicated and/or required by substrate manufacturer.

PART 3 - EXECUTION

3.1 GENERAL

A. Manufacturer's Instructions: Prepare substrates, apply primers and apply the work of this Section, including components, and accessories in accordance with the manufacturer's instructions, except where more stringent requirements are shown or specified, and where project conditions require extra precautions or provisions to ensure satisfactory performance of the Work.

B. Markings: Manufacturer's identification tags or marks are not acceptable on surfaces where products are considered to be finish material. Evidence of patching after removal of tags or marks is not acceptable.

3.2 EXAMINATION

A. Verification of Conditions: Examine the areas to receive the Work and the conditions under which the Work would be performed. Remedy conditions detrimental to the proper and timely completion of the Work. Do not proceed until unsatisfactory conditions have been corrected.

3.3 INSTALLATION

A. Extent of Insulation: Extend insulation full thickness over entire area to be insulated. Install in single layer unless otherwise shown or recommended by manufacturer. Cut and fit insulation tightly around obstructions and against each other. Neatly finish insulation exposed to view without broken corners or open joints. Use **Type INS-03** insulation where no other specific type is shown.

B. Installation over Waterproofing: Lay rigid insulation over waterproofing with beveled edges down and with slightly open joints. Seal edges of other board insulation with sealer to form a tight seal between units.

C. Installation of Cavity Wall Board Insulation: Install as recommended by manufacturer. Fit courses of insulation between ties, anchors, supports and other obstructions, with edges butted tightly in both directions. Press units firmly against inside substrates.

D. Installation of Insulation: Apply insulation units to substrates by method indicated, complying with manufacturer's written instructions. If no specific method is indicated, bond units to substrate with adhesive or use mechanical anchorage to provide permanent placement and support of units.

1. Mineral-Wool Blanket Insulation: Install in cavities according to the following requirements:

2. Use insulation widths and lengths that fill the cavities. If more than one length is required to fill the cavities, provide lengths that will produce a snug fit between ends.

3. Place insulation in cavities to produce a friction fit between edges of insulation and adjoining framing members.

4. Maintain ¾ in. clearance of insulation around recessed lighting fixtures not rated for or protected from contact with insulation.

5. For wall cavities where cavity heights exceed 8 ft. support unfaced blankets mechanically and support faced blankets by taping flanges of insulation to flanges of metal studs.

6. Vapor-Retarder-Faced Blankets: Tape joints and ruptures in vapor-retarder facings, and seal each continuous area of insulation to ensure airtight installation.

7. Exterior Walls: Set units with facing placed toward exterior of construction as indicated on Drawings unless otherwise shown or required by manufacturer.

E. Installation of Insulation for Concrete Vertical Substrates: Verify, with manufacturer, methods of installation of insulation for vertical concrete substrates.

1. Install board insulation on concrete substrates by adhesively attached, spindle-type insulation anchors as follows:

2. Fasten insulation anchors to concrete substrates with insulation anchor adhesive according to anchor manufacturer's written instructions. Space anchors according to insulation manufacturer's written instructions for insulation type, thickness, and application indicated.

3. Apply insulation standoffs to each spindle to create cavity width indicated between concrete substrate and insulation.

4. After adhesive has dried, install board insulation by pressing insulation into position over spindles and securing it tightly in place with insulation-retaining washers, taking care not to compress insulation

below indicated thickness.

5. Where insulation will not be covered by other building materials, apply capped washers to tips of spindles.

F. Miscellaneous Voids: Install insulation in miscellaneous voids and cavity spaces where required to prevent gaps in insulation.

G. Installation of Vapor Retarders: Place vapor retarders on side of construction indicated on Drawings. Extend vapor retarders to extremities of areas to protect from vapor transmission. Secure vapor retarders in place with adhesives or other anchorage system as indicated. Extend vapor retarders to cover miscellaneous voids in insulated substrates, including those filled with loose-fiber insulation.

1. Seal vertical joints in vapor retarders over framing by lapping no fewer than two studs.

2. Before installing vapor retarders, apply urethane sealant to flanges of metal framing including runner tracks, metal studs, and framing around door and window openings. Seal overlapping joints in vapor retarders with vapor- retarder tape according to vapor-retarder manufacturer's written instructions. Seal butt joints with vapor-retarder tape. Locate all joints over framing members or other solid substrates.

3. Firmly attach vapor retarders to metal framing and solid substrates with vapor-retarder fasteners as recommended by vapor-retarder manufacturer.

H. Maintenance of Vapor Barrier: Maintain integrity of vapor barriers of insulation by taping and sealing joints, ruptures and edges of units adjoining other surfaces. Seal joints caused by pipes, conduits, electrical boxes and similar items penetrating vapor barriers to create an air-tight seal between penetrating objects and vapor barrier. Repair any tears or punctures in vapor retarders immediately before concealment by other work. Cover with tape or another layer of vapor barrier

3.4 PROTECTION

A. General: Protect installed insulation, vapor barriers and accessories from harmful weather exposures and from possible physical abuse. Replace insulation damaged or unsuitable for use.

END OF SECTION

SECTION 07 27 10 – AIR VAPOR BARRIER

PART 1 - GENERAL

1.1 SUMMARY

A. General: Provide building insulation in accordance with requirements of the Contract Documents.

B. This Section includes but is not limited to the following:

1. Provide air vapor barrier system at all exterior wall locations.

2. Provide all accessory components required for a complete installation, including transitions to maintain continuity of the air vapor barrier to adjacent construction.

3. Coordinate with testing agencies performing specified field testing and inspections. Testing agency and Special Inspector may be two separate entities.

C. Related Sections include but are not limited to the following:

1. Exterior Wall Construction components related to self adhering sheet air vapor barriers:

2. Section 07 23 00, “Building Insulation”.

3. Sealants and joint fillers are specified in Section 07 92 50 "Joint Sealers".

4. Section 07 62 00 “Flashing and Sheet Metal” for through-wall flashings. Through wall flashings shall be metal.

1.2 REFERENCES

A. References and industry standards listed in this Section are applicable to the Work. Unless more restrictive criteria or differing requirements are explicitly stated in the Specifications, or mandated by governing codes or regulations, the recommendations, suggestions, and requirements described in the referenced standards shall be deemed mandatory and applicable to the Work.

1. American Society of Testing and Materials (ASTM).

2. National Institute of Standards and Technology (NIST).

3. Code of Federal Regulations (CFR).

1.3 DEFINITIONS

A. Air Vapor Barrier: The collection of air vapor barrier materials and auxiliary materials applied to an opaque wall, including joints and junctions to abutting construction, to control movement of air and water through the wall.

1.4 SUBMITTALS

A. Product Data

1. Include manufacturer's written instructions for evaluating, preparing,

and treating substrate; technical data; and tested physical and performance properties of air vapor barrier. Include curing requirements for all substrates and membrane materials. Include installation instructions for all materials. Installation instructions shall take into account the sequence of installation of adjacent construction materials.

B. Shop Drawings

1. Show locations and extent of air vapor barrier. Include details for substrate joints and cracks, counterflashing strip, penetrations, inside and outside corners, terminations, and tie-ins with adjoining construction. Details shall include all conditions and auxiliary materials required for the provision of an air vapor barrier continuous with other elements of the building envelope, whether or not these are indicated explicitly on the contract Drawings.

2. Include details of interfaces with other materials that form part of air vapor barrier. Include details of interfaces with other materials that form part of the water drainage plane, including metal through-wall flashing, termination bars, and sealants.

3. Details shall indicate conditions specific to the Project. Manufacturer’s typical details that do not reflect the actual Project conditions are insufficient. Details shall allow for proper sequence of installation of all components of the building envelope.

4. Include details of mockups.

C. Product Certificates

1. For air vapor barriers, provide manufacturer's product certification documents certifying compatibility of air vapor barrier and accessory materials with Project materials that connect to or that come in contact with the specified air vapor barrier system.

2. Contacted materials shall include, but not be limited to, exterior sheathing board, concrete, steel members, building insulation, insulation adhesives, flashing, stainless steel flashing, flashing termination bar, termination bar sealant, door and window frames, roofing membranes.

D. Warranty

1. Submit Manufacturer's Warranty.

E. Mock-up: Provide mock-up as indicated under Quality Assurance.

F. Qualification Data

1. For applicator/installer.

2. For membrane manufacturer.

3. For Company Field Advisor.

G. Test and Inspection Reports

1. Product test reports: Based on evaluation of comprehensive tests performed by a qualified independent testing agency, for air vapor

barriers.

2. Test Reports

3. Field Inspection Reports

H. Certifications

1. Air Water barrier manufacturer's Field Advisor's certification of completed Work: As specified.

I. Closeout Submittals

1. Warranties: Special warranties as specified.

1.5 QUALITY ASSURANCE

A. Qualifications

1. Applicator Qualifications: A firm experienced in applying air vapor barrier materials similar in material, design, and extent to those indicated for this Project, whose work has resulted in applications with a record of successful in-service performance.

2. Membrane Manufacturer Qualifications: The fabricator/manufacturer shall must, for the past five (5) years, have been regularly engaged in the manufacture of material or equipment similar in type to that required for this Project. Such material or equipment provided by the manufacturer must have been in satisfactory service for not less than five (5) years.

B. Company Field Advisor

1. Secure the services of a Company Field Advisor of the air vapor barrier manufacturer. The Field Advisor shall be certified in writing by the manufacturer to be technically qualified in design, installation, and servicing of the required products. Personnel involved solely in sales do not qualify. The Field Advisor shall be present at the pre-installation conference, at construction of the mockup, at the beginning of the actual air vapor barrier installation, and as necessary throughout the project for the purpose of:

a. Rendering technical assistance to the Contractor regarding installation procedures of the system.

b. Familiarizing the Engineer with all aspects of the system.

c. Answering all questions which might arise.

2. The Field Advisor shall make periodic visits during the execution of the Work, and shall certify the Work upon completion.

C. Mockups

1. Before beginning installation of air vapor barrier, build mockups of exterior wall assembly, at least 150 sq. ft. of each assembly type, incorporating backup wall construction, window or window receptor, door frame and sill, insulation, and flashing to demonstrate surface preparation, sequence of installation, crack and joint treatment, and sealing of gaps, terminations, transitions, and penetrations of air vapor barrier membrane.

   a. Include parapet condition, building corner condition, and foundation wall intersection.

2. Coordinate construction of mockup to permit access for inspection by testing agency of air vapor barrier before architectural precast concrete or metal wall panel assembly is installed.

3. If the Engineer determines that mockups do not comply with requirements, reconstruct mockups and apply air vapor barrier until mockups are approved.

4. Approved mockups may become part of the completed Work if undisturbed at time of Substantial Completion.

D. Pre-installation Conference

1. Conduct conference at Project site.

2. Include installers of other construction connecting to air vapor barrier, including but not limited to waterproofing, exterior sheathing board, sealants, flashing, windows, door frames, and roofing as applicable.

3. Review air vapor barrier requirements including surface preparation, substrate condition and pretreatment, minimum substrate curing period, forecasted weather conditions, special details and flashings, mockups, installation procedures, sequence of installation, testing and inspecting procedures, and protection and repairs.

1.6 PERFORMANCE REQUIREMENTS

A. General: Air vapor barrier shall perform as a continuous vapor-retarding air vapor barrier and as a liquid-water drainage plane flashed to discharge to the exterior incidental condensation or water penetration. Air vapor barrier assemblies shall accommodate substrate movement and seal substrate expansion and control joints, construction material changes, and transitions at perimeter conditions without deterioration and air leakage exceeding specified limits. Air vapor barrier shall withstand positive and negative air pressure without damage or displacement. Air vapor barrier shall pass preconstruction testing and field quality control testing and inspection as specified.

1.7 DELIVERY, STORAGE, AND HANDLING

A. Store rolls according to manufacturer's written instructions.

B. Store liquid membrane accessory materials in their original undamaged packages in a clean, dry, protected location and within temperature range

required by air vapor barrier manufacturer. Remove and replace liquid membrane accessory materials that cannot be applied within their stated shelf life.

C. Protect stored materials from direct sunlight.

1.8 ENVIRONMENTAL REQUIREMENTS

A. Apply air vapor barrier within the range of ambient and substrate temperatures recommended by air vapor barrier manufacturer. Protect substrates from environmental conditions that affect performance of air vapor barrier. Do not apply air vapor barrier to a damp or wet substrate or during snow, rain, fog, or mist.

1.9 WARRANTY

A. Manufacturer's Warranty

1. Submit manufacturer's two (2) year Warranty that air vapor barrier and accessories are free of defects and are manufactured to meet manufacturer's published properties and the requirements of this Specification. Manufacturer shall promptly replace defective materials without cost or expense to New York City.

PART 2 – PRODUCTS

2.1 MATERIALS

A. Sheet Air Vapor Barrier Membrane System (**WPS-03**): Sheet applied, vapor impermeable, air vapor barrier, weather membrane formed into uniform flexible sheets. Provide one of the following:

1. Basis of Design: "Perm-A-Barrier" (GCP Applied Technologies) but not intended to imply a preference for a specific product.

2. Or equal as approved by Engineer as manufactured by:

   a. Henry Company.

   b. W.R. Meadows, Inc.

   c. Carlisle Coatings & Waterproofing.

   d. Or approved equal.

3. Products selected shall comply with the following minimum physical characteristics:

   a. Sheet Waterproofing Membrane:

      1) Air Permeance, ASTM E2178: Not to exceed 0.004 cfm/sq. ft. under a pressure differential of 0.3 in. water. (1.57 psf)
      2) Water Vapor Permeance, Not to exceed 0.05 perm; ASTM E 96, Water Method.
      3) Tensile Strength: 400 psi minimum; ASTM D412, Die C, modified.
      4) Ultimate Elongation: 200% minimum; ASTM D412, Die C, modified.

5) Low-Temperature Flexibility: Pass at -45 deg. F.; ASTM D1970.
6) Puncture Resistance: 40 lbf min.; ASTM E154.
7) Lap Peel Adhesion: 5lbf/in. width; ASTM D1876, at minimum application temperature, modified.
8) Water Absorption: 0.10% weight gain max. after 72 hour immersion at 70.

b. Transition Membrane:

1) Perm-A-Barrier Detail Membrane manufactured by GCP; a 36 mil (0.9mm) of self-adhesive rubberized asphalt integrally bonded to 4 mil (0.1 mm) of cross-laminated, high-density polyethylene film to provide a min. 40 mil (1.0 mm) thick membrane. Membrane shall be interleaved with disposable silicone-coated release paper until installed, conforming to the following:

a) Water Vapor Transmission, ASTM E96, Method B: 2.9 ng/m2sPa (0.05 perms) max.
b) Air Permeance at 75Pa (0.3 in. water) pressure difference: 0.0006 L/(s.m2) (0.00012 cfm/ft2) max.
c) Puncture Resistance, ASTM E154: 178 N (40 lbs.) min.
d) Lap Adhesion at -4ºC (25ºF), ASTM D1876: 880 N/m (5.0 lbs./in.) of width
e) Low Temperature Flexibility, ASTM D1970: Unaffected to -43ºC (-45ºF)
f) Tensile Strength, ASTM D412, Die C Modified: min.
2.7 MPa (400 psi)
g) Elongation, Ultimate Failure of Rubberized Asphalt, ASTM D412, Die C: min. 200%.

c. Primers

1) Primer for Primary Self-adhered air vapor barrier membrane: Perm-A-Barrier Primer Plus manufactured by GCP; a water- based primer which imparts an aggressive, high tack finish on the treated substrate. Product shall have the following minimum physical properties:

a) Color: Milky White (wet), Clear (dry)
b) Weight: 8.25 lbs./gal.
c) Solids Content (by wt.): 53-57%
d) Solvent Type: Water
e) VOC Content: Not to excess 1 g/L
f) Application Temperature: 4°C (40°F) and above

2) Wall Primer for Self-adhered transition membrane and Self- adhered flexible membrane wall flashing: Perm-A- Barrier WB Primer manufactured by GCP; a water-

based primer which imparts an aggressive, high tack finish on the treated substrate. Product Shall have the following minimum physical properties:

a) Flash Point: No flash to boiling point

b) Solvent Type: Water

c) VOC Content: Not to exceed 10 g/L

d) Application Temperature: -4°C (25°F) and above

e) Freezing point (as packaged): -7°C (21°F)

d. Penetrations and Termination Sealant

1) Liquid Membrane for Details and Terminations: Bituthene Liquid Membrane manufactured by GCP; a two-part, elastomeric, trowel grade material designed for use with self- adhered membranes and tapes. 10 g/L max. VOC content.

e. Substrate Patching Membrane: Bituthene Liquid Membrane manufactured by GCP; a two- part, elastomeric, trowel grade material designed for use with self-adhered membranes and tapes. 10 g/L max. VOC content.

2.2 ACCESSORIES

A. General: Auxiliary materials recommended by air vapor barrier manufacturer for intended use and compatible with air vapor barrier membrane. Provide auxiliary materials required for the provision of an air vapor barrier continuous with other elements of the building envelope, whether or not these materials are indicated explicitly on the contract Drawings.

B. Joint Reinforcing Strip: Air vapor barrier manufacturer's glass-fiber-mesh tape.

C. Stainless-Steel Sheet: ASTM A 240/A 240M, Type 304, 0.0250 inch thick, and Series 300 stainless-steel fasteners.

D. Sprayed Polyurethane Foam Sealant: 1- or 2-component, foamed-in-place, polyurethane foam sealant, 1.5 to 2.0 lb/cu. ft. density; flame spread index of 25 or less according to ASTM E 162; prepare substrate with non-corrosive materials as recommended by foam sealant manufacturer. Air vapor barrier manufacturer shall confirm compatibility.

E. Joint Sealant: ASTM C 920, single-component, neutral-curing silicone; Class 100/50 (low-modulus), Grade NS, Use NT related to exposure, and, as applicable to joint substrates indicated, Use O. Air vapor barrier manufacturer shall confirm compatibility with this and all other joint sealants that contact air vapor barrier system materials.

PART 3 - EXECUTION

3.1 GENERAL

A. Examine substrates, areas, and conditions for compliance with requirements

and other conditions affecting performance.

B. Verify that substrates are sound and free of oil, grease, dirt, or other contaminants.

C. Verify that sealants have cured for minimum time period recommended by sealant manufacturer.

D. Proceed with installation only after unsatisfactory conditions have been corrected.

3.2 SURFACE PREPARATION

A. Clean, prepare, treat, and seal substrate according to manufacturer's written instructions. Provide clean, dust-free, and dry substrate for air vapor barrier application.

B. Mask off adjoining surfaces not covered by air vapor barrier to prevent spillage and overspray affecting other construction.

1. Remove projections, and fill honeycomb, holes, and other voids in concrete with substrate patching material recommended by air vapor barrier manufacturer.

2. At changes in substrate plane, apply sealant or termination mastic beads at sharp corners and edges to form a smooth transition from one plane to another.

3. Cover gaps in substrate plane and form a smooth transition from one substrate plane to another with stainless-steel sheet mechanically fastened to structural framing to provide continuous support for air vapor barrier. Prepare, treat, and seal vertical and horizontal surfaces at terminations and penetrations with termination mastic and according to ASTM D 6135.

4. Apply primer to substrates at required rate and allow it to dry. Limit priming to areas that will be covered by air-barrier sheet on same day. Reprime areas exposed for more than 24 hours.

a. Prime glass-fiber-surfaced exterior sheathing with number of prime coats needed to achieve required bond, with adequate drying time between coats.

3.3 INSTALLATION OF TRANSITION STRIPS AND OTHER AUXILIARY MATERIALS

A. Install strips, transition strips, and auxiliary materials according to air vapor barrier manufacturer's written instructions to form a seal with adjacent construction and maintain a continuous air vapor barrier meeting all performance requirements.

1. Coordinate the installation of air vapor barrier with installation of roofing membrane and parapet flashing to ensure continuity of air vapor barrier.

2. Coordinate the installation of air vapor barrier to allow for proper sequence of installation of all components of the building envelope.

B. Apply adhesive primer to substrates at required rate. Cover with air vapor barrier strips in accordance with manufacturer’s instructions.

C. Align and position transition membrane, remove protective film and press firmly into place. Ensure minimum 2 inch overlap at all end and side laps.

D. Connect and seal exterior wall air vapor barrier membrane continuously to concrete below-grade structures, floor-to floor construction, parapet/roof construction, exterior glazing and window systems, exterior louvers, exterior door frames, other construction used in exterior wall openings, moving joints, and the interface of dissimilar materials, using strips and auxiliary materials. Provide a continuous air- tight covering over all surfaces, transitions and around penetrations. Allow for relative movement of different assemblies. Promptly roll all laps and membrane with a counter top roller to effect seal.

E. A continuous air vapor barrier shall be installed, sealing all seams, joints, openings, and penetrations, maintaining the integrity of the air vapor barrier. Sealing materials spanning joints between construction materials shall allow for expansion, contraction, and other movement of the materials. Provide sealed connections between all transitions in planes and changes in materials. Provide flexible seals where necessary to accommodate relative movement of adjacent components.

F. At end of each working day, seal top edge of strips and transition strips to substrate with termination mastic.

G. Apply joint sealants forming part of air vapor barrier assembly within manufacturer's recommended application temperature ranges. Consult air vapor barrier and sealant manufacturers for equivalent alternative when specified sealant cannot be applied within these temperature ranges.

H. Connect and seal exterior wall air-barrier membrane continuously to roofing-membrane, concrete below-grade structures, floor-to-floor construction, exterior glazing and window systems, glazed curtain-wall systems, storefront systems, exterior louvers, exterior door framing, and other construction used in exterior wall openings, using accessory materials.

I. Wall Openings: Apply adhesive primer to concealed perimeter frame surfaces of windows, doors, and curtain wall systems. Apply aluminum faced detail membrane flashing so that a minimum of 3 inches of coverage is achieved over both substrates. Maintain 3 inches of full contact over firm bearing to perimeter frames. Roll transition strip firmly to enhance adhesion.

J. Fill gaps in perimeter frame surfaces of windows, doors, curtain wall systems, and miscellaneous penetrations of air vapor barrier membrane with foam sealant (type as recommended by manufacturer). Ensure that foam sealant does not interfere with drainage or cause deflection of frames or other adverse effects.

K. Seal strips and transition strips around penetrations with termination mastic.

L. Seal top of through-wall flashings and termination bars to air vapor barrier with an additional 6-inch-wide counterflashing strip, or with additional overlapping air vapor barrier membrane material, as recommended by the membrane manufacturer. Use material compatible with copper/fabric flashing, termination bar, and sealant bead at top of termination bar.

M. Seal exposed edges of strips at seams, cuts, penetrations, and terminations not concealed by metal counterflashings or ending in reglets with termination

mastic.

N. Repair punctures, voids, and deficient lapped seams in strips and transition strips. Slit and flatten fishmouths and blisters. Patch with transition strips extending 6 inches beyond repaired areas in strip direction.

3.4 AIR VAPOR BARRIER MEMBRANE INSTALLATION

A. Apply and firmly adhere air vapor barrier membrane to substrates, in conjunction with and sealed to strips and transition strips, to achieve a continuous, fully adhered air vapor barrier system. Installation shall be in accordance with air vapor barrier manufacturer's written instructions. Seal all leakage pathways.

B. Apply air vapor barrier membrane within manufacturer's recommended application temperature ranges.

C. Detail membrane strips and air membrane shall overlap a minimum of 3”, or in accordance with air vapor barrier manufacturer's written instructions.

D. Install air vapor barrier sheets and auxiliary materials to form a seal with adjacent construction and to maintain a continuous air vapor barrier.

E. Coordinate the installation of air vapor barrier with installation of roofing membrane and base flashing to ensure continuity of air vapor barrier with roofing membrane.

F. Install flashing strip recommended by air vapor barrier on roofing membrane or base flashing so that a minimum of 3 in. of coverage is achieved over both substrates.

G. Connect and seal exterior wall air vapor barrier membrane continuously to roofing membrane barrier, exterior glazing and window systems, storefront systems, exterior louvers, exterior door framing, and other construction used in exterior wall openings using accessory materials and according to manufacturer's tested assembly.

H. Wall Openings: Prime concealed perimeter frame surfaces of windows, storefronts, doors and other wall openings. Apply aluminum faced detail flashing sheet as recommended by air vapor barrier manufacturer so that a minimum of 3 in. of coverage is achieved over both substrates. Maintain 3 in. of full contact over firm bearing to perimeter frames with not less than 1 in. of full contact.

I. Fill gaps in perimeter frame surfaces of storefronts, doors, and miscellaneous penetrations of air vapor barrier membrane with compatible sealant approved by air vapor barrier manufacturer.

J. At end of each working day, seal top edge of membrane to substrate with termination mastic.

K. Apply joint sealants forming part of air vapor barrier assembly within manufacturer's recommended application temperature ranges. Consult manufacturer when sealant cannot be applied within these temperature ranges.

L. Repair punctures, voids, and deficient lapped seams in air vapor barrier. Slit and flatten fishmouths and blisters. Patch with air vapor barrier sheet

extending 6 in. beyond repaired areas in all directions.

M. Provide access to the air vapor barrier for testing and inspection by the testing agency and by the Engineer. Do not cover air vapor barrier until the completion of a curing period if recommended by the membrane manufacturer for air vapor barrier systems requiring a separate application of adhesive. Do not leave air vapor barrier exposed longer than recommended by manufacturer.

N. Correct deficiencies in or remove air vapor barrier that does not comply with requirements; repair substrates and reapply air vapor barrier components.

O. Provide protection from UV degradation in accordance with manufacturer's written instruction until full building air infiltration testing is complete.

3.5 JOB COMPLETION

A. A representative of the air vapor barrier manufacturer (Company Field Advisor) shall inspect the Work periodically and notify the contractor of any defects. All defects must be corrected. The representative shall submit written certification to the Engineer that representative has consulted on and inspected the work and that the materials and installation are in conformance with the manufacturer's published physical properties and installation recommendations and with the Contract Documents.

B. Cleaning and Protection: Protect sheet air vapor barriers from damage during construction period so that it will be without indication of abuse or damage at time of acceptance. Protect the building and adjacent construction from damage resulting from spillage, dripping and dropping of materials. Repair and restore other work damaged during sheet air vapor barrier installation.

1. Protect air vapor barrier system from damage during application and remainder of construction period. Comply with manufacturer's instructions.

   a. Protect air vapor barrier from exposure to UV light and harmful weather exposure as required by manufacturer. Remove and replace air vapor barrier exposed for more than 30 days or longer than recommended by the manufacturer.

   b. Protect air vapor barrier from contact with creosote, uncured coal-tar products, EPDM, sealants not approved by air vapor barrier manufacturer, and other non-compatible materials.

   c. Protect air vapor barrier from mechanical damage.

2. Clean spills, stains, and soiling from construction that would be exposed in the completed work using cleaning agents and procedures recommended by manufacturer of affected construction.

END OF SECTION

SECTION 07 55 56 – FLUID APPLIED MEMBRANE ROOFING

PART 1 - GENERAL

1.1 SUMMARY

A. General: Provide fluid-applied membrane roofing in accordance with requirements of the Contract Documents.

B. Related Work Specified Elsewhere

1. Wood grounds, nailers, blocking, cants and other wood items required for complete roof installation is specified under Section 06 15 00 “Rough Carpentry”.

2. Roof specialties and accessories as part of roofing construction is specified in Section 07 70 00 “Roof and Wall Specialties and Accessories”.

3. Metal flashings, prefabricated flashing systems, reglets and associated metal trim as part of roofing construction is specified in Section 07 62 00 “Sheet Metal Flashing and Trim”.

4. Sealants and joint fillers are specified under Section 07 92 00 “Joint Sealants”.

1.2 DEFINITIONS

A. Roofing Terminology: Refer to ASTM D 1079, glossary of NRCA's "The NRCA Roofing and Waterproofing Manual" and Roof Consultants Institute “Glossary of Terms” for definition of terms related to roofing work in this Section.

1.3 REFERENCES

A. General: Comply with the applicable provisions of the referenced standards except as modified by governing codes and the Contract Documents. Where a recommendation or suggestion occurs in the referenced standards, such recommendation or suggestion shall be considered mandatory. In the event of conflict between referenced standards, this specification or within themselves, the more stringent standard or requirement shall govern.

1. National Roofing Contractors Association (NRCA)

a. "Roofing and Waterproofing Manual"

b. "Handbook of Accepted Roofing Practices".

2. Sheet Metal and Air Conditioning Contractors National Association, Inc. (SMACNA): “Architectural Sheet Metal Manual.”

1.4 SYSTEM DESCRIPTION

A. General: Fluid applied membrane roofing and flashing system with compatible components that will not permit passage of liquid and withstands wind loads, building movement, flotation loads, thermally induced movement, and exposure to weather without failure.

B. Design Wind Pressure: Design, fabricate, and install component parts so that

the completed Work shall withstand the design wind pressure as required by Project conditions and New York City Building Code.

C. Fire Hazard Classification: Provide roofing system which has been tested by UL in accordance with ASTM E108 methods and listed for a Class A rating on noncombustible decks

D. Thermal Barrier: Design fabricate and install fluid applied membrane roofing system with continuous insulation to provide an thermal barrier. Provide thickness of insulation required to achieve a minimum effective thermal R-value of 30. Provide additional insulation thickness to compensate for losses in insulation value due to supports, configuration, gaps and tolerances within roof assemblies.

1.5 SUBMITTALS

A. Product Data: Submit for Engineer’s action. Submit manufacturer’s literature, specifications and installation instructions describing the general properties of each material and accessory to be used in the Work

1. Submit manufacturer's installation instructions for the fluid applied protected membrane roofing system and other data as may be required to show compliance with the Contract Documents.

2. Indicate by transmittal form that a copy of manufacturer's installation details have been sent to the applicator.

B. Shop Drawings: Submit for Engineer’s action. Submit manufacturer approved shop drawings for the fabrication and installation of the Work. Prepare details at not less than 3 in. = 1 ft. minimum scale. Provide the following:

1. Penetrations, curbs, drains, scuppers, and projections.

2. Flashing details, including inside and outside corner reinforcements and terminations.

3. Crack and joint treatments, including expansion joints.

4. Interface with contiguous materials.

5. Edge terminations including parapet flashing termination.

C. Samples: Submit for Engineer’s action. Label samples to indicate product, characteristics, and location in the Work. Samples will be reviewed for color and appearance only. Furnish sufficient samples to establish the full range of colors and textures for materials exposed in the finished work. Compliance with other requirements is the responsibility of the Contractor. Provide samples of the following:

1. Roofing Membrane: 12 in. square sample of fully cured fluid-applied roofing membrane.

2. Elastomeric Flashing Membrane: 12 in. square.

3. Protection Sheet: 12 in. square.

4. Reinforcing Membrane: 12 in. square.

5. Walking Pads.

D. Quality Control Submittals: Submit for Engineer’s information.

1. Certificates:

   a. Document Review: Before commencing work, submit a written statement signed by the Contractor and the Applicator certifying that the Contract Documents, shop drawings and product data have been reviewed with material manufacturers' qualified technical representatives and that they agree the selected materials are proper, compatible with contiguous materials and adequate for the application shown

   b. Manufacturer's Acceptance: Upon completion of the Work submit a written statement signed by the manufacturer stating that the field supervision by the manufacturer's representative was sufficient to insure proper application of the materials, that the Work was installed in accordance with the Contract Documents and that the installation was inspected by and is acceptable to the manufacturer.

   c. Installer Certification: Furnish certification signed by the primary manufacturer of the roofing materials, stating that the Installer is approved as a qualified applicator of said roofing system. Include certification from an independent testing laboratory verifying that the roofing membrane meets or exceeds the project's required performance requirements.

2. Quality Control Testing and Inspection Reports: Provide documentation as to manufacturer's representative site visits and approval of systems for warranty purposes. Furnish written test reports of the procedures, findings and determinations as a result of the required roof membrane water testing.

E. Closeout Submittals: Submit for City of New York's documentation

1. Warranties: Special warranties as specified.

2. Maintenance Manuals: Two (2) sets of manufacturer's printed instructions and recommendations for proper maintenance of the specified roof system including inspection frequencies, penetration addition policies, temporary repairs, and leak call procedures.

1.6 QUALITY ASSURANCE

A. Qualified Installer: The entity performing the work of this section must, within the last five (5) consecutive years prior to the bid opening have successfully completed in a timely fashion at least three (3) projects similar in scope, size and type to the required work.

B. Single Source Responsibility: Obtain fluid applied roofing system from one source of a single manufacturer. Obtain accessory products used in conjunction with fluid applied roofing system from the fluid applied roofing system manufacturer or from sources acceptable to the fluid applied roofing system manufacturer. The fabricator/manufacturer shall must, for the past five (5) years, have been regularly engaged in the manufacture of material or equipment similar in type to that required for this Project. Such material or equipment provided by the manufacturer must have been in satisfactory service for not less than five (5) years.

C. Single-Source Responsibility: In order to have a single-source responsibility and receive a system warranty from the fluid applied membrane manufacturer, provide flashing, insulation, substrate surface conditioner, reinforcing sheet, adhesive sealants, as directed by the membrane manufacturer.

D. Regulatory Requirements: Comply with applicable requirements of the laws, codes, ordinances and regulations of Federal, State and Municipal authorities. Obtain necessary approvals from the NYC Building Department.

E. Preliminary Roofing Conference: Before starting roof deck construction, conduct conference at Project site. Review methods and procedures related to roof deck construction and roofing system including, but not limited to, the following:

1. Meet with City of New York, Engineer, testing and inspecting agency representative, roofing Installer, roofing system manufacturer's representative, deck Installer, and installers whose work interfaces with or affects roofing including installers of curtain walls, roof accessories and roof-mounted equipment.

2. Review methods and procedures related to roofing installation, including manufacturer's written instructions.

3. Review and finalize construction schedule and verify availability of materials, Installer's personnel, equipment, and facilities needed to make progress and avoid delays.

4. Examine deck substrate conditions and finishes for compliance with requirements, including flatness and fastening.

5. Review structural loading limitations of roof deck during and after roofing.

6. Review base flashings, special roofing details, roof drainage, roof penetrations, equipment curbs, and condition of other construction that will affect roofing system.

7. Review temporary protection requirements for roofing system during and after installation.

8. Review roof observation and repair procedures after roofing installation

F. Pre-Installation Meeting: Prior to the start of the Work, meet at the Project site to review methods and sequence of installation, special details and conditions, standard of workmanship, testing and quality control requirements, job organization and other pertinent topics related to the Work.

G. Manufacturer's Technical Representative: At the start of the installation and periodically as work progresses provide the services of the manufacturer's technical representative at the job site as often as deemed necessary by the manufacturer to advise on phases of this work.

1.7 DELIVERY, STORAGE AND HANDLING

A. Delivery: Deliver materials in manufacturer's unopened containers identified with name, brand, type, grade, class and other qualifying information,

including UL and other specified insurance agency's labels.

B. Storage: Store in accordance with product manufacturer's instructions. Handle and store roofing materials and place equipment in a manner to avoid significant or permanent damage to deck or structural supporting members. Protect roofing insulation materials from damage and from deterioration by sunlight, moisture, soiling, and other sources. Store in a dry location.

1.8 PROJECT/SITE CONDITIONS

A. Weather Condition Limitations: Proceed with fluid-applied membrane roofing and associated work only when weather conditions will permit unrestricted use of materials and adequate quality control of work being installed, in compliance with requirements and with recommendations of primary roofing materials manufacturers.

1.9 WARRANTY

A. Special Warranty: Manufacturer agrees to repair or replace components of roofing system that fail in materials or workmanship within specified warranty period.

1. Warranty also includes base flashings, insulation, and other components of roofing system.

B. Warranty Period: 20 years from date of Substantial Completion.

PART 2 - PRODUCTS

2.1 SYSTEM TYPES

A. Roof System (**RS-01**): Provide a complete roof system with surface conditioners, specified reinforced fluid applied roof membrane, flashing and underlayment.

2.2 FLUID APPLIED ROOFING MATERIALS

A. Membrane Roofing Assembly shall be constructed as an exposed roof membrane assembly. The system will be comprised of the following:

1. Roof Membrane System: Prefabricated, reinforced, homogeneous Styrene- Butadiene-Styrene (SBS) block copolymer modified asphalt membrane applied over a prepared substrate, covered with a liquid applied, flexible, polymethylmethacrylate (PMMA) based monolithic membrane formed by the combination of liquid PMMA resin and fleece fabric.

a. Resin for Field Membrane Construction: A flexible, polymethylmethacrylate (PMMA) based resin for use in combination with fleece fabric to form a monolithic, reinforced membrane.

1) Parapro Roof Resin by Siplast; Irving, TX shall be the basis of design but not intended to imply a preference for a specific product.

2) Other manufacturers include the following:

a) Soprema

b) Kemper Systems.

c) or approved equal

b. Fleece for Field Membrane Reinforcement: A non-woven, 110 g/m², needle-punched polyester fabric reinforcement as supplied by the membrane system manufacturer.

1) Pro Fleece by Siplast; Irving, TX shall be the basis of design but not intended to imply a preference for a specific product.

2) Other manufacturers include the following:

a) Soprema

b) Kemper Systems.

c) or approved equal

c. Flashing system:

1) Flashing Membrane Assembly: A flashing membrane assembly consisting of a liquid applied, flexible, polymethylmethacrylate (PMMA) based monolithic membrane formed by the combination of liquid PMMA-based resin and fleece fabric.

a) Siplast Parapro Waterproofing System shall be the basis of design but not intended to imply a preference for a specific product.

b) Other manufacturers include the following:

(1) Soprema

(2) Kemper Systems.

(3) or approved equal.

2) Resin for Flashing Applications: A flexible, polymethylmethacrylate (PMMA) based resin combined with a thixotropic agent for use in combination with non-woven, 110 g/m², needle-punched polyester fabric reinforcement to form a monolithic, reinforced flashing membrane.

a) Parapro 123 Flashing Resin by Siplast; Irving, TX shall be the basis of design but not intended to imply a preference for a specific product.

b) Other manufacturers include the following:

(1) Soprema

(2) Kemper Systems.

(3) or approved equal.

d. Fleece for Flashing Reinforcement: A non-woven, 110 g/m², needle- punched polyester fabric reinforcement as supplied by the membrane system manufacturer.

1) Pro Fleece by Siplast; Irving, TX. shall be the basis of design but not intended to imply a preference for a specific product.

2) Other manufacturers include the following:

a) Soprema.

b) Kemper Systems.

c) or approved equal.

2. Surface Conditioner

3. Underlayment/Roof Board Materials

a. Cementitious Roof Cover Panel: Portland cement formulation with a high performance polymer-coated glass fiber mesh; moisture and mold resistant; manufactured to conform to ASTM C1325. Provide panels having a nominal thickness of 5/8 inch. Acceptable types are as follows:

1) Securock Cement Roof Board by US Gypsum shall be the basis of design but not intended to imply a preference for a specific product.

2) Other manufacturers include the following:

a) Georgia Pacific Corporation

b) CertainTeed.

c) or approved equal.

4. Insulation Fasteners: Insulation fasteners and plates shall be FM Approved, and/or approved by the manufacturer of the primary roofing products. The insulation fasteners shall provide attachment required to meet the specified uplift performance and to restrain the insulation panels against the potential for ridging. The fastening pattern for each insulation panel to be used shall be as recommended by the insulation manufacturer and approved by the manufacturer of the primary roofing products.

5. Insulation: Extruded polystyrene board (60 psi) with water drainage channels. 6 inch minimum thickness.

6. Vapor Barrier as manufactured by roof membrane manufacturer or approved equal.

7. Integral Walking Pads as manufactured by roof membrane manufacturer or approved equal.

2.3 INSULATION MATERIALS

A. Extruded Polystyrene Board Insulation (**INS-02**): Rigid, closed-cell extruded expanded polystyrene with integral high density skin complying with ASTM C578, Type VII, minimum compressive strength of 60 psi ; minimum R-Value of 5.0 per 1 in.thickness at 75 deg F. (24 deg C); standard sizes; thickness as shown, 6 in. min.; with channeled edges; one of the following:

1. "Styrofoam PlazaMate" (The Dow Chemical Co.).

2. "Foamular 604" (Owens-Corning Corp.).
3. "CertiFoam Plaza Deck" (DiversiFoam Products).
4. Or approved equal.

PART 3 - EXECUTION

3.1 GENERAL

A. Manufacturer's Instructions: Prepare substrates, apply primers and apply the work of this Section, including components, and accessories in accordance with the manufacturer's instructions, except where more stringent requirements are shown or specified, and where project conditions require extra precautions or provisions to ensure satisfactory performance of the Work.

3.2 EXAMINATION

A. Verification of Conditions: Examine the areas to receive the Work and the conditions under which the Work would be performed. Contractor shall remedy conditions detrimental to the proper and timely completion of the Work. Do not proceed until unsatisfactory conditions have been corrected.

B. Manufacturer’s Representation: The manufacturer of the roofing membrane and the applicator shall inspect the first pour of concrete substrate to review the acceptability of the concrete for application of the roofing system. Verify that curing compounds or surface hardeners incompatible with fluid applied membrane roofing system have not been used on concrete surfaces.

3.3 PREPARATION

A. Substrate Acceptability: Inspect areas and accept surfaces designated to receive fluid applied roofing system, as satisfactory for the reception of the Work specified in this Section, without conflict with "Warranty" requirements. Commencement of installation shall constitute acceptance of substrate conditions by the Installer.

B. Cleaning and Patching of Substrate: Clean substrate of debris and deleterious material which would impair the Work. Patch cracks, voids and honeycombs to provide a smooth, structurally sound surface. Cut off high spots and grind smooth. Apply surface conditioners in accordance with roofing membrane manufacturer's instructions.

C. Structural concrete surface to be finished with wood float (not steel trowel or power floated). Concrete density 135 lbs/ft.^{3} minimum, cured for 28 days

D. Piping, Conduit and Other Penetrations: Do not proceed with membrane roofing until drains, piping, conduit, vents, ducts and other projections through the substrate have been installed. Holes, honeycombs and cavities shall be pointed or filled and finished flush in accordance with manufacturer's directions utilizing materials recommended by the manufacturer of the roofing membrane.

3.4 INSTALLATION

A. General: Install the roofing substrate and roofing system in accordance with the manufacturer's instructions, except where more stringent requirements are shown or specified. Install and complete the system to assure that no water leakage through the system occurs.

B. Vapor Barrier: Install in accordance with vapor barrier manufacturer's printed instructions

C. Insulation: Install in accordance with insulation manufacturer's printed instructions. Loosely lay extruded insulation units over substrate, with long joints of insulation in continuous straight lines and with end joints staggered between rows. Fit insulation neatly and accurately at walls, curbs and other projections and bring edges and ends of units into moderate contact with open joints. Install one or more layers of insulation to achieve required thickness over roofing membrane. Cut and fit to within 3/4 in. of projections and penetrations. Where overall insulation thickness is 2 in. or more, install required thickness in two or more layers with joints of each succeeding layer staggered over joints of previous layer a minimum of 6 in. in each direction.

D. Roof Board: Install in accordance with roofing manufacturer's printed instructions in preparation to receive resin: Ensure that the insulation panels have been properly secured. Inspect the surface of the panel insulation system to ensure that edges are level and even between adjoining panels. Prime surfaces using the specified PMMA-based primer at the rate specified by the resin manufacturer and allow primer to cure. Tape the panel joints and panel terminations at nailers, walls, perimeter and penetrations using gaffer’s tape, centering the tape strips over the joints or panel edges.

E. Priming: Prime surface conditioner substrate surfaces. Use products, equipment and methods recommended by the roofing materials manufacturer and approved for use in New York City. Treat non-moving cracks, penetrations, control joints and other joints in substrate with materials, methods and designs as recommended by the roofing membrane manufacturer.

F. Wood Blocking: Provide such wood blocking, cants and nailers not shown but necessary to comply with the roofing materials manufacturer's requirements. Comply with requirements of Section 06 10 00 "Rough Carpentry".

G. Flashing: Install flashing using products and systems specified in the roofing membrane manufacturer's requirements. Flash pipes, conduits, sleeves, and other projections passing through roof membrane and provide tight construction throughout. Where pipes or conduits pass through areas to be roofed or where drains occur in such areas, apply membrane roofing only after flashing around pipes, conduits and drains is in place. Lap flashing into the membrane in accordance with manufacturers recommendations and instructions.

H. Stripping: Set metal flanges in roofing membrane. Prime flanges and strip in flanges of metal roof accessories, metal flashings and elastomeric

flashings with roofing membrane. Set roof drains as per manufacturer's written instructions.

I. Application Thickness: Apply an initial roofing membrane in a continuous monolithic coating to a minimum thickness of 90 mils. 3/32 in.. Into the initial membrane fully embed a layer of spunbond polyester fabric reinforcing sheet with 4 in. side laps and 12 in. head laps followed by an additional continuous monolithic coating of roofing membrane of 125 mils 1/8 in., resulting in a total minimum roofing membrane thickness of 215 mils, 7/32 in. at any location. Utilize methods recommended by the roofing membrane manufacturer. Apply additional material to correct areas deficient in thickness by procedures recommended by the membrane manufacturer.

J. Integral Walking Pads: Install integral walking pads as indicated on drawings or as a minimum, from roof access to and around all roof top equipment.

K. Roofing Metal Work: Be responsible for the proper attachment of specified work to roofing metal or related work that is embedded in, or in contact with, and becomes an integral part of specified roofing or flashing system, even when such roofing metal or related work is provided under other Sections of the Specifications. Where flashings terminate against parapet walls, curbs, pipe and vent penetrations and other such obstructions, provide termination bars and pipe clamping rings as recommended by the roofing membrane manufacturer. Provide continuous sealant bead at top of termination bars and clamping rings.

3.5 FIELD QUALITY CONTROL

A. Contractor’s Quality Control Responsibilities: Contractor is solely responsible for quality control of the Work.

B. High Voltage Electronic Leak Detection: Perform leak testing by an electronic detection process administered by a certified High Voltage ELD tester and monitored by qualified testing agency as follows:

1. Test equipment shall consist of conductive phosphor bronze brush electrodes and a portable battery powered generator capable of providing variable DC current from 1000-30,000 volts at low amperage.

2. The ELD Technician shall connect one terminal of the generator to a ground in the assembly (typically a steel or concrete deck, or alternative grounding medium such as a conductive primer or metal grid). Connect the other terminal to the phosphor bronze brush. Calibrate the voltage level to the thickness of the membrane being tested.

3. The ELD Technician shall methodically pass the brush electrode over all testable vertical membrane surfaces in the contract and approximately 1 foot (25 cm) of horizontal membrane directly adjacent to the vertical membrane areas. Successive passes will overlap previous passes by a minimum of 3 inches (75 mm). Breaches will be identified when an audible alarm indicates that

the electric current has passed through a defect and grounded to the conductive material beneath the membrane.

4. The ELD Technician shall mark breach locations on the membrane with spray paint, chalk, tape or other approved method.

C. Low Voltage Electronic Water Testing: Perform leak testing by an electronic detection process (Electric Field Vector Mapping) administered by a certified electric field mapping tester and monitored by qualified testing agency as follows:

1. Test the entire roofing membrane on an area-by-area basis as required by the conduct of the Work. Install stationary impulse conductor wire around perimeter of area to be tested. The testing agency will determine size and shape of area. Provide conductor wire consisting of braided polyethylene 1/16 in. (1.5mm) diameter interwoven with a minimum of six strands of stainless steel wire. Place conductor wire 6 in. (150mm) from perimeter and secure against accidental movement or damage. Place wire directly on membrane. Isolate metal items contacting the membrane by placing four to six additional stands of conductor wire to isolate the field or by removing the metal items temporarily if possible. Bring connection wires to an agreed upon location and place within watertight conduit and identified watertight junction box so as to allow for future testing.

2. Wet the membrane test area with water or other suitable conductor fluid prior to start of each test and maintain wet for duration of testing. Utilizing a potentiometer and two probes placed at the surface of the membrane detect the presence or absence of electrical flow across the surface of the membrane. Verify integrity of the membrane at drains and penetrations by localized testing.

3. Provide a report of each day's test results containing a written description and photograph of defects and any corrections made and a schematic CAD drawing indicating location of stationary conductor wire and of any defects found in testing to within 1 in. (25mm) of accuracy.

D. Water and Leak electronic testing may be conducted on an area by area basis as the Work permits but in no case shall less than 100% of the roof and waterproofing membranes be tested. If leaks occur, remove existing components and replace with new materials (matching existing) to eliminate the causes and sources of the leaks.

3.6 CITY OF NEW YORK'S MONITORING ACTIVITIES

A. City of New York's Testing Agency: A testing agency, engaged at the City of New York's expense, will perform the following activities to monitor the Contractor's Quality Control Program. The monitoring activities do not relieve the Contractor of responsibilities under the Contract.

1. The testing agency shall inspect and report on the following:

a. Flashings: Inspection of flashings to assure

manufacturer's quality requirements are maintained throughout the installation period.

b. Membrane Thickness: Inspection of the membrane to verify thickness by taking random samples in locations selected by the Engineer. Take one (1) sample for each 100 $ft.^2$ prior to cooling of the membrane and installation of the protection sheet utilizing a pin or needle gauge as recommended by the membrane manufacturer. Testing agency shall submit written test results noting location and thickness.

c. Electronic Water Test Observation: Observe electronic water testing and examine underside of decks and terminations for evidence of leaks during testing.

B. Contractor's Assistance to the City of New York's Testing Agency: Furnish the City of New York's Testing Agency with access to the Work, materials and facilities as required by the Agency. Provide adequate notice of construction activities to allow timely inspections and observation of Contractor tests, and be available for pre- installation meetings. Furnish the City of New York's Testing Agency with on-site office facilities.

C. Contractor's Responsibility

1. Upon award of Contract, complete the form furnished by the Inspection Agency.

2. Provide the Inspection Agency with safe access to the Work.

3. Notify the Inspection Agency whenever work is to be done, in sufficient time to arrange inspection.

4. Discontinue any practice immediately when notified which, in the Inspection Agency's opinion, is not in accordance with the Specifications or will act to the detriment of the system. The Inspection Agency will notify the City of New York, the Engineer, the Contractor and the manufacturer immediately of violations. Work affected by the practice will be subject to complete replacement.

5. Give written notice to the Inspection Agency stating that the installation has been completed in accordance with the Contract Documents and requesting that a final inspection be conducted.

3.7 ADJUSTING

A. Correct deficiencies in or remove fluid applied membrane roofing system components that do not comply with requirements. Repair substrates, and repair or reinstall components or system to a condition free of damage and deterioration at time of Substantial Completion and in compliance with warranty requirements.

3.8 PROTECTION

A. Protect adjacent construction from damage resulting from spillage, dripping and dropping of material. Prevent materials from entering and clogging drains and water conductors. Repair and restore, or replace

other work which is soiled or damaged in connection with the performance of this work.

B. Until roofing membrane is protected with insulation and the ballast system, keep areas free from traffic and other trades. Upon completion of roofing, provide necessary temporary protection to prevent damage from any source.

END OF SECTION

SECTION 07 55 66 – VEGETATED FLUID APPLIED PROTECTED MEMBRANE ROOFING

PART 1 - GENERAL

1.1 SUMMARY

A. General: Provide vegetated fluid-applied protected membrane roofing in accordance with requirements of the Contract Documents.

B. Related Work Specified Elsewhere

1. Wood grounds, nailers, blocking, cants and other wood items required for complete roof installation is specified under Section 06 15 00 “Rough Carpentry”.

2. Metal flashings, prefabricated flashing systems, reglets and associated metal trim as part of roofing construction is specified in Section 07 62 00 “Sheet Metal Flashing and Trim”.

3. Sealants and joint fillers are specified under Section 07 92 00 “Joint Sealants”.

1.2 DEFINITIONS

A. Roofing Terminology: Refer to ASTM D 1079, glossary of NRCA's "The NRCA Roofing and Waterproofing Manual" and Roof Consultants Institute “Glossary of Terms” for definition of terms related to roofing work in this Section.

1.3 REFERENCES

A. General: Comply with the applicable provisions of the referenced standards except as modified by governing codes and the Contract Documents. Where a recommendation or suggestion occurs in the referenced standards, such recommendation or suggestion shall be considered mandatory. In the event of conflict between referenced standards, this specification or within themselves, the more stringent standard or requirement shall govern.

1. Canadian General Standards Board (CGSB): CGSB 37.50-M89, “Hot- Applied, Rubberized Asphalt for Roofing and Waterproofing”.

2. National Roofing Contractors Association (NRCA)

a. "Roofing and Waterproofing Manual"

b. "Handbook of Accepted Roofing Practices".

c. "The NRCA Green Roof Systems Manual".

3. Sheet Metal and Air Conditioning Contractors National Association, Inc. (SMACNA): “Architectural Sheet Metal Manual.”

4. ANSI/SPRI VR-1 2011 “Procedure for Investigating Resistance to Root Penetration on Vegetative Roofs

1.4 SYSTEM DESCRIPTION

A. General: Fluid applied protected membrane roofing and flashing system with compatible components that will not permit passage of liquid and withstands wind loads, building movement, flotation loads, thermally induced movement, and exposure to weather without failure.

B. Design Wind Pressure: Design, fabricate, and install component parts so that the completed Work shall withstand the design wind pressure as shown on the Drawings.

C. Fire Hazard Classification: Provide roofing system which has been tested by UL in accordance with ASTM E108 methods and listed for a Class A rating on noncombustible decks

D. Thermal Barrier: Design fabricate and install fluid applied membrane roofing system with continuous insulation to provide an thermal barrier. Provide thickness of insulation required to achieve a minimum effective thermal R-value of 30. Provide additional insulation thickness to compensate for losses in insulation value due to supports, configuration, gaps and tolerances within roof assemblies.

E. Garden Roof System: Garden Roofing System shall be designed so as to allow the natural growth of selected landscaping without detrimental effects to roof membrane system or any other contiguous materials. The garden roof insulated membrane system shall be designed as an “Extensive” Green Roof.

1.5 SUBMITTALS

A. Product Data: Submit for Engineer’s action. Submit manufacturer’s literature, specifications and installation instructions describing the general properties of each material and accessory to be used in the Work

1. Submit manufacturer's installation instructions for the fluid applied protected membrane roofing system and other data as may be required to show compliance with the Contract Documents.

2. Indicate by transmittal form that a copy of manufacturer's installation details have been sent to the applicator.

B. Shop Drawings: Submit for Engineer’s action. Submit manufacturer approved shop drawings for the fabrication and installation of the Work. Prepare details at not less than 3 in. = 1 ft. minimum scale. Provide the following:

1. Penetrations, curbs, drains, scuppers, and projections.

2. Flashing details, including inside and outside corner reinforcements and terminations.

3. Crack and joint treatments, including expansion joints.

4. Interface with contiguous materials.

5. Edge terminations including parapet flashing termination.

6. Layout of precast concrete roof ballast units complete with description of paver support pedestal and stainless steel strapping system for pavers.

7. Locations and depths of garden roof areas showing elements of system. Note locations of components including drain inspection device.

C. Samples: Submit for Engineer's action. Label samples to indicate product, characteristics, and location in the Work. Samples will be reviewed for color and appearance only. Furnish sufficient samples to establish the full range of colors and textures for materials exposed in the finished work. Compliance with other requirements is the responsibility of the Contractor. Provide samples of the following:

1. Roofing Membrane: 12 in. square sample of fully cured fluid-applied roofing membrane.

2. Elastomeric Flashing Membrane: 12 in. square.

3. Protection Sheet: 12 in. square.

4. Water Pervious Fabric: 12 in. square.

5. Reinforcing Membrane: 12 in. square.

6. Roof Pavers: Full size samples showing color, texture and finish specified.

7. Roof Paver Pedestal: One of each type including each individual component and accessory.

8. Water Retention Assembly: 12 in. square.

9. Drainage aggregate: 1 lb.

10. Growth Medium: 1 lb.

11. Planting Samples: Three (3) 12 in. square of selection.

12. Prefabricated Drainage Course: 12 in. square

D. Quality Control Submittals: Submit for Engineer's information.

1. Certificates:

a. Document Review: Before commencing work, submit a written statement signed by the Contractor and the Applicator certifying that the Contract Documents, shop drawings and product data have been reviewed with material manufacturers' qualified technical representatives and that they agree the selected materials are proper, compatible with contiguous materials and adequate for the application shown

b. Manufacturer's Acceptance: Upon completion of the Work submit a written statement signed by the manufacturer stating that the field supervision by the manufacturer's representative was sufficient to insure proper application of the materials, that the Work was installed in accordance

with the Contract Documents and that the installation was inspected by and is acceptable to the manufacturer.

c. Installer Certification: Furnish certification signed by the primary manufacturer of the roofing materials, stating that the Installer is approved as a qualified applicator of said roofing system. Include certification from an independent testing laboratory verifying that the roofing membrane meets or exceeds the requirements of CGSB 37.50-M89.

2. Quality Control Testing and Inspection Reports: Provide documentation as to manufacturer's representative site visits and approval of systems for warranty purposes. Furnish written test reports of the procedures, findings and determinations as a result of the required roof membrane water testing.

E. Closeout Submittals: Submit for City of New York's documentation

1. Warranties: Special warranties as specified.

2. Maintenance Manuals: Two (2) sets of manufacturer's printed instructions and recommendations for proper maintenance of the specified roof system including inspection frequencies, penetration addition policies, temporary repairs, and leak call procedures.

1.6 QUALITY ASSURANCE

A. Qualified Installer: The entity performing the work of this section must, within the last five (5) consecutive years prior to the bid opening have successfully completed in a timely fashion at least three (3) projects similar in scope, size and type to the required work.

B. Single Source Responsibility: Obtain fluid applied protected roofing system from one source of a single manufacturer. Obtain accessory products used in conjunction with fluid applied protected roofing system from the fluid applied protected roofing system manufacturer or from sources acceptable to the fluid applied protected roofing system manufacturer. The fabricator/manufacturer shall must, for the past five (5) years, have been regularly engaged in the manufacture of material or equipment similar in type to that required for this Project. Such material or equipment provided by the manufacturer must have been in satisfactory service for not less than five (5) years.

C. Single-Source Responsibility: In order to have a single-source responsibility and receive a system warranty from the fluid applied membrane manufacturer, provide flashing, insulation, substrate surface conditioner, reinforcing sheet, adhesive sealants, protection course/root barrier, drainage core, filter fabric, aggregate, precast concrete pavers as directed by the membrane manufacturer.

D. Regulatory Requirements: Comply with applicable requirements of the laws, codes, ordinances and regulations of Federal, State and Municipal authorities. Obtain necessary approvals from the NYC Building Department.

E. Preliminary Roofing Conference: Before starting roof deck construction, conduct conference at Project site. Review methods and procedures related to roof deck construction and roofing system including, but not limited to, the following:

1. Meet with City of New York, Engineer, testing and inspecting agency representative, roofing Installer, roofing system manufacturer's representative, deck Installer, and installers whose work interfaces with or affects roofing including installers of curtain walls, roof accessories and roof-mounted equipment.

2. Review methods and procedures related to roofing installation, including manufacturer's written instructions.

3. Review and finalize construction schedule and verify availability of materials, Installer's personnel, equipment, and facilities needed to make progress and avoid delays.

4. Examine deck substrate conditions and finishes for compliance with requirements, including flatness and fastening.

5. Review structural loading limitations of roof deck during and after roofing.

6. Review roof garden requirements as related to materials and installation.

7. Review base flashings, special roofing details, roof drainage, roof penetrations, equipment curbs, and condition of other construction that will affect roofing system.

8. Review temporary protection requirements for roofing system during and after installation.

9. Review roof observation and repair procedures after roofing installation

F. Pre-Installation Meeting: Prior to the start of the Work, meet at the Project site to review methods and sequence of installation, special details and conditions, standard of workmanship, testing and quality control requirements, job organization and other pertinent topics related to the Work.

G. Manufacturer's Technical Representative: At the start of the installation and periodically as work progresses provide the services of the manufacturer's technical representative at the job site as often as deemed necessary by the manufacturer to advise on phases of this work.

1.7 DELIVERY, STORAGE AND HANDLING

A. Delivery: Deliver materials in manufacturer's unopened containers identified with name, brand, type, grade, class and other qualifying information, including UL and other specified insurance agency's labels.

B. Storage: Store in accordance with product manufacturer's instructions. Handle and store roofing materials and place equipment in a manner to avoid significant or permanent damage to deck or structural supporting members. Protect roofing insulation materials from damage and from

deterioration by sunlight, moisture, soiling, and other sources. Store in a dry location.

C. Store and handle pavers and related materials to prevent their deterioration or damage due to moisture, temperature changes, contaminants, corrosion, breakage, chipping, or other causes.

D. Store pavers on wood skids or pallets, covered with non-staining, waterproof membrane. Place and stack skids and pavers to distribute weight evenly and to prevent breakage or cracking of pavers. Allow air circulation around pavers.

1.8 PROJECT/SITE CONDITIONS

A. Weather Condition Limitations: Proceed with fluid-applied protected membrane roofing and associated work only when weather conditions will permit unrestricted use of materials and adequate quality control of work being installed, in compliance with requirements and with recommendations of primary roofing materials manufacturers.

B. Cold Weather Protection Pavers: Comply with the following requirements:

1. Do not use frozen materials or materials mixed or coated with ice or frost.

2. Do no build on frozen subgrade or setting beds.

3. Remove and replace work damaged by frost or freezing.

1.9 WARRANTY

A. Special Warranty: Manufacturer agrees to repair or replace components of roofing system that fail in materials or workmanship within specified warranty period.

1. Warranty also includes base flashings, insulation, roof pavers, and other components of roofing system.

B. Warranty Period: 20 years from date of Substantial Completion.

PART 2 - PRODUCTS

2.1 SYSTEM TYPES

A. Roof System (**RS-02**): In areas designated Garden Roof System provide a complete system with surface conditioners, specified reinforced fluid applied roof membrane, protection sheet, root barrier, insulation, drainage mat, moisture retention mat, drainage panels, filter fabric, growth medium and intensive vegetation.

2.2 FLUID APPLIED ROOFING MATERIALS

A. Membrane Roofing Assembly shall be constructed as an inverted roof membrane assembly (IRMA). The system will be comprised of the following:

1. Surface Conditioner

2. Option 1 – Cold Fluid Applied

a. Roof Membrane System: Prefabricated, reinforced, homogeneous Styrene-Butadiene-Styrene (SBS) block copolymer modified asphalt membrane applied over a prepared substrate, covered with a liquid applied, flexible, polymethylmethacrylate (PMMA) based monolithic membrane formed by the combination of liquid PMMA resin and fleece fabric.

1) Resin for Field Membrane Construction: A flexible, polymethylmethacrylate (PMMA) based resin for use in combination with fleece fabric to form a monolithic, reinforced membrane.

a) Parapro Roof Resin by Siplast; Irving, TX shall be the basis of design.

b) Other manufacturers include the following:

(1) Soprema

(2) Kemper Systems.

(3) or approved equal

2) Fleece for Field Membrane Reinforcement: A non-woven, 110 g/m², needle-punched polyester fabric reinforcement as supplied by the membrane system manufacturer.

a) Pro Fleece by Siplast; Irving, TX shall be the basis of design.

b) Other manufacturers include the following:

(1) Soprema

(2) Kemper Systems.

(3) or approved equal

3) Flashing system:

a) Flashing Membrane Assembly: A flashing membrane assembly consisting of a liquid applied, flexible, polymethylmethacrylate (PMMA) based monolithic membrane formed by the combination of liquid PMMA-based resin and fleece fabric.

(1) Siplast Parapro Waterproofing System shall be the basis of design.

(2) Other manufacturers include the following:

(a) Soprema

(b) Kemper Systems.

(c) or approved equal.

b) Resin for Flashing Applications: A flexible, polymethylmethacrylate (PMMA) based resin combined with a thixotropic agent for use in combination with non-woven, 110 g/m², needle-punched polyester fabric reinforcement to form a monolithic, reinforced flashing membrane.

(1) Parapro 123 Flashing Resin by Siplast; Irving, TX shall be the basis of design.

(2) Other manufacturers include the following:

(a) Soprema

(b) Kemper Systems.

(c) or approved equal.

4) Fleece for Flashing Reinforcement: A non-woven, 110 g/m², needle-punched polyester fabric reinforcement as supplied by the membrane system manufacturer.

a) Pro Fleece by Siplast; Irving, TX. shall be the basis of design.

b) Other manufacturers include the following:

(1) Soprema.

(2) Kemper Systems.

(3) or approved equal.

5) Drainage Mat:

a) “Paradrain” by Siplast shall be the basis of design.

b) Other manufacturers include the following:

(1) Soprema.

(2) Kemper Systems.

(3) or approved equal.

3. Option 2 – Hot Fluid Applied

a. Hot Fluid-Applied Rubberized Asphalt Waterproofing Membrane: Hot melt rubberized asphalt, 100 % solids, complying with CAN/CGSB- 37.50M; one of the following:

1) "FR System" utilizing "Liquid Membrane 6125" (American Hydrotech, Inc.)

2) "Ram Tough 250-DM" (The Barrett Co.).

3) "790-11 (Reinforced)" (Henry Company).

4) Or approved equal.

b. Flashing Membrane Assembly:

1) Flashing Membrane Assembly: A flashing membrane assembly consisting of a liquid applied, flexible, polymethylmethacrylate (PMMA) based monolithic membrane formed by the combination of liquid PMMA-based resin and fleece fabric.

2) Resin for Flashing Applications: A flexible, polymethylmethacrylate (PMMA) based resin combined with a thixotropic agent for use in combination with non-woven, 110 g/m², needle-punched polyester fabric reinforcement to form a monolithic, reinforced flashing membrane.

3) Fleece for Flashing Reinforcement: A non-woven, 110 g/m², needle-punched polyester fabric reinforcement as supplied by the membrane system manufacturer.

c. Reinforcing Sheet; Continuous filament needle-punched spun bond polyester bonded with an acrylic binder and as recommended by the hot fluid-applied rubberized asphalt waterproofing membrane manufacturer.

d. Adhesives, Thinners, Primers, Sealers, Tape, Sealant and Solvents: Type as recommended by the manufacturer of the hot fluid-applied rubberized asphalt waterproofing.

e. Protection Board: Manufacturer approved, premolded, 1/8 in. (3mm) thick, semi-rigid board complying with ASTM D6506 Type 2 Class B consisting of mineral stabilized core sandwiched between layers of asphalt saturated felt, surface coated with asphalt and sealed to core under heat and pressure and provide with polyethylene film facings.

f. Nonwoven-Geotextile-Faced, Molded-Sheet Drainage Panel: Manufactured composite subsurface drainage panels consisting of a nonwoven, needle-punched geotextile facing with an apparent opening size not exceeding No. 70 (0.21mm) sieve laminated to 1 side and a polymeric film bonded to the other side of a 3-dimensional, non-biodegradable, molded-plastic-sheet drainage core, with a vertical flow rate of 9 to 15 gpm/ft. (112 to 188 L/min./m).

4. Insulation: Extruded polystyrene board (60 psi) with water drainage channels. 6 inch minimum thickness.

5. Vapor Barrier as manufactured by roof membrane manufacturer or approved equal.

2.3 AUXILIARY MATERIALS

A. Garden Roof Components:

1. Protection Sheet/Root Barrier for Roof Garden Areas: Manufacturer approved continuous 160 mils thick polyester reinforced SBS modified bitumen sheet with granular surface and root inhibiting additive in areas scheduled as garden insulated membrane roofing system.

2. Prefabricated Drainage Course for Roof Garden Areas: Three dimensional, molded panels, 1.5 in. thickness, made of recycled HDPE with drainage channels with holes on top side and water retention reservoirs, crushproof drainage core in areas schedule as garden insulated membrane roofing (waterproofing) system.

3. Water and Moisture Retention Assembly: Provide water retention assembly with active water control valve system for Roof Garden Areas as indicated on the drawings. Provide and moisture retention mat for Roof Garden Areas as indicated on the drawings: Water retention structure to provide storage capacity indicated and complete support of Roof Garden and project design loads. Rot proof fibrous mat strength class 3, used for additional water and nutrient retention as recommended by the system membrane manufacturer

4. Drainage Inspection Devices: Provide hinged stainless steel drain inspection device with keyed locking device, over each drain and other noted accessories, within the soft landscape area.

5. Growth Media for Roof Garden Areas

a. Intensive Growth Media: Custom growing media mix with an application density of 38 lbs/ft^3 – 69 lbs/ft^3 and pH of 6.5 to 7.5 capable of supporting vigorous growth of the specified vegetation installed onto the filter sheet to a depth of 6 in. or as indicated on drawings, complete with appropriate nutrients and organic material as recommended and supplied by roof garden system manufacturer.

b. Drainage Ballast: 3/8 in. to ¾ in. expanded lightweight aggregate for use as fill material within drainage course only areas scheduled as component of insulated membrane roofing (waterproofing) system.

c. Hydromulch: Wood fiber-based hydromulch with natural-based tackifier for use in securing plantings on roof. Where hydromulching equipment is available and has access to roof; hydromulch shall be mixed with tackifier and applied as wet slurry to cutting installations.

6. Plantings:

   a. Vegetative Sedum Carpet from selection of plants (eight (8) different species minimum) that are appropriate for project location and roof assembly.

      1) InstaGreen Sedum Carpet as provided by American Hydrotech, Inc.

      2) Paragreen Pre-Grown Vegetated Mat as provided by Siplast.

      3) Sopranature Toundra as provided by Soprema.

7. Metal Edging:

   a. Extruded aluminum edging perforated to allow water flow as shown on drawings. Size as noted on plans.

8. Miscellaneous Materials for Roof Garden System: Provide water retaining boards, moisture retention assembly and other products and materials to provide a complete watertight garden roof system in accordance with manufacturer's requirements and requirements of scheduled plantings and landscaping.

2.4 INSULATION MATERIALS

A. Extruded Polystyrene Board Insulation (**Type INS-02**): Rigid, closed-cell extruded expanded polystyrene with integral high density skin complying with ASTM C578, Type VII, minimum compressive strength of 60 psi ; minimum R-Value of 5.0 per 1 in.thickness at 75 deg F. (24 deg C); standard sizes; thickness as shown, 6 in. min.; with channeled edges; one of the following:

   1. "Styrofoam PlazaMate" (The Dow Chemical Co.).

   2. "Foamular 604" (Owens-Corning Corp.).

   3. "CertiFoam Plaza Deck" (DiversiFoam Products).

   4. Or approved equal.

2.5 BALLAST AND PAVER MATERIALS

A. Precast Concrete Paver (**PAV-01**): Precast concrete pavers with cast-in tie-down system as required for project uplift restraint conditions and as indicated on drawings, complying with the following minimum requirements:

   1. Compressive Strength: 8500psi. (55Mpa).

   2. Flexural Strength: 1100 psi (7.6MPa).

   3. Absorption: Less than 5%.

   4. Density: 155 lb./ft.3 (2480kg/m3)

   5. Color/Finish: As selected by Engineer's from Manufacturer's full range.

   6. Texture/Exposed aggregate: As selected by Engineer's from Manufacturer's full range.

7. Manufacturer: One of the following:
    a. Wausau Tile Inc.
    b. Hanover Architectural Products.
    c. Westile Roofing Products.
    d. Or approved equal.

B. Paver Pedestal Supports: As shown and/or as required, provide paver manufacturer's standard SBR rubber, high-density polyethylene, or polyurethane paver support assembly consisting of pedestals supports with spacer tabs for joint spacing as noted on the drawings. Provide pedestal supports and every paver corner and intersection.

C. Adjustable Leveling Paver Pedestal Supports: As shown and/or as required, provide one of the following systems:
    1. “High-Tab Pedestal Assembly System” (Hanover Architectural Products).
    2. “Terra-Adjust Pedestals” (Wausau Tile, Inc
    3. “Bison ScrewJack Pedestal Systems” (United Construction Products).
    4. Or approved equal.

D. Paver Strapping Securement System: Paver securement strapping fabricated from 3 in. wide x 12 ft. long stainless steel, a minimum of 22 gauge thick. Provide ¼ in. x 1- 1/4 in. stainless steel expansion type fasteners anchored to predrilled holes in each paver as required for NYC Building Code and FM Global acceptance.

PART 3 - EXECUTION

3.1 GENERAL

A. Manufacturer's Instructions: Prepare substrates, apply primers and apply the work of this Section, including components, and accessories in accordance with the manufacturer's instructions, except where more stringent requirements are shown or specified, and where project conditions require extra precautions or provisions to ensure satisfactory performance of the Work.

3.2 EXAMINATION

A. Verification of Conditions: Examine the areas to receive the Work and the conditions under which the Work would be performed. Contractor shall remedy conditions detrimental to the proper and timely completion of the Work. Do not proceed until unsatisfactory conditions have been corrected.

B. Manufacturer’s Representation: The manufacturer of the roofing membrane and the applicator shall inspect the first pour of concrete substrate to review the acceptability of the concrete for application of the roofing system. Verify that curing compounds or surface hardeners incompatible with fluid applied protected membrane roofing system have not been used on concrete surfaces.

3.3 PREPARATION

A. Substrate Acceptability: Inspect areas and accept surfaces designated to receive fluid applied roofing system, as satisfactory for the reception of the Work specified in this Section, without conflict with "Warranty" requirements. Commencement of installation shall constitute acceptance of substrate conditions by the Installer.

B. Cleaning and Patching of Substrate: Clean substrate of debris and deleterious material which would impair the Work. Patch cracks, voids and honeycombs to provide a smooth, structurally sound surface. Cut off high spots and grind smooth. Apply surface conditioners in accordance with roofing membrane manufacturer's instructions.

C. Piping, Conduit And Other Penetrations: Do not proceed with membrane roofing until drains, piping, conduit, vents, ducts and other projections through the substrate have been installed. Holes, honeycombs and cavities shall be pointed or filled and finished flush in accordance with manufacturer's directions utilizing materials recommended by the manufacturer of the roofing membrane.

D. Preparation of Cracks and Joints: Prepare, treat, rout, and fill joints and cracks in substrate according to CAN/CGSB-37.51, "Application of Rubberized Asphalt, Hot- Applied, for Roofing and Waterproofing," and waterproofing manufacturer's recommendations.

E. Do not proceed with paver installation until surfaces and conditions comply with requirements indicated in specifications.

F. Clean paver surfaces that have become dirty or stained prior to setting to remove soil, stains and foreign materials. Clean pavers by thoroughly scrubbing pavers with fiber brushes followed by a thorough drenching with clear water. Use only mild cleaning compounds that contain no caustic or harsh filler or abrasives.

3.4 INSTALLATION

A. General: Install the roofing system in accordance with the manufacturer's instructions, except where more stringent requirements are shown or specified. Install and complete the system to assure that no water leakage through the system occurs.

B. Priming: Prime surface conditioner substrate surfaces. Use products, equipment and methods recommended by the roofing materials manufacturer and approved for use in New York City. Treat non-moving cracks, penetrations, control joints and other joints in substrate with materials, methods and designs as recommended by the roofing membrane manufacturer.

C. Wood Blocking: Provide such wood blocking, cants and nailers not shown but necessary to comply with the roofing materials manufacturer's requirements. Comply with requirements of Section 06 10 00 "Rough Carpentry".

D. Flashing Membrane Application

1. General: Flash in accordance with details or recommendations by Membrane manufacturer. Install the flashings before installing the field membrane to minimize foot traffic over newly installed field membrane.
2. Provide a minimum vertical height of 12 in. for all flashing terminations wherever possible. Flashing height shall be at least as high as the potential water level that could be reached as a result of a deluging rain, snow buildup and/or poor slope.
3. All flashing shall be terminated as required by the membrane manufacturer, properly installed in accordance with industry-accepted practice.
4. Mix and apply cold fluid-applied membrane flashing in strict accordance with written instructions of membrane manufacturer.
5. Apply an even layer of cold fluid-applied resin at the minimum consumption rate recommended by the membrane manufacturer. Work reinforcement into the wet resin, removing trapped air. Maintain 2 in. minimum overlap at all side and butt laps of reinforcement and extend flashing a minimum of 4 in. horizontally onto deck.
6. Apply an even topcoat of cold fluid-applied resin at the minimum consumption rate recommended by the membrane manufacturer.
7. Wall, curb and base flashings shall be installed to solid substrate surfaces only. Adhering to gypsum-based panels, wood or metal siding, and other similar materials is not acceptable.
8. Flash all walls, curbs and base flashings using cold fluid-applied polyester waterproofing membrane. Flashing material shall be the same resin used in the field membrane with fleece reinforcement, if required by manufacturer. Reinforce all transition locations and other potential wear areas with a 4 in. wide polyester fleece bottom layer evenly positioned over the transition prior to installing the exposed flashing layer. Reinforce all inside and outside corners with a 4 in. diameter conical piece of fleece prior to installing the exposed flashing layer.
9. All pins, dowels and other fixation elements shall be flashed separately with a vertical flashing component prior to installing the exposed flashing layer.
10. Extend flashing a minimum of 4 in. onto the field substrate surface.
11. Metal accessories and fabrications shall be installed to solid substrate surfaces only.
12. Allow completed membrane to cure as recommended by the membrane manufacturer prior to continuing application or applying loads.

13. Pipes, Conduits, and Unusual Shaped Penetrations:

    a. Pipes conduits and other items to be flashed must be separated with 1 in. minimum clearance or as recommended by membrane manufacturer to adequate waterproof each individual penetration.

    b. All penetrations must be flashed individually. Two or more items ganged together in a flashing shall not be permitted.

    c. Flash penetrations using cold fluid-applied membrane or membrane manufacturers proprietary flashing matrix as recommended.

14. Drains: Flash waterproofing drains using cold fluid-applied membrane. Flashing shall consist of target flashing extending minimum 12 in. horizontally onto the substrate and extend down into the prepared drain bowl a minimum of 3 in. At no time should the fluid-applied membrane be installed to restrict or reduce the drain inlet in size.

B. Option 1 – Cold Fluid Applied Membrane Application

1. Stripping: Set metal flanges in roofing membrane. Prime flanges and strip in flanges of metal roof accessories, metal flashings and elastomeric flashings with roofing membrane. Set roof drains as per manufacturer's written instructions.

2. Mix and apply cold fluid-applied waterproofing membrane in strict accordance with written instructions of membrane manufacturer. Apply an even layer of cold fluid-applied resin at the minimum consumption rate recommended by the membrane manufacturer.

3. Work reinforcement into the wet resin, removing trapped air. Maintain a minimum 2 in. overlap at all side and butt laps of adjacent reinforcement rows. Maintain a minimum 4 in. overlap at all flashings and penetrations.

4. Apply an even topcoat of cold fluid-applied resin at the minimum consumption rate recommended by the membrane manufacturer.

5. Allow completed membrane to cure as recommended by the membrane manufacturer prior to continuing application or applying loads.

C. Option 2 – Hot Fluid Applied

1. Stripping: Set metal flanges in roofing membrane. Prime flanges and strip in flanges of metal roof accessories, metal flashings and elastomeric flashings with roofing membrane. Set roof drains as per manufacturer's written instructions.

2. Application Thickness: Apply an initial roofing membrane in a continuous monolithic coating to a minimum thickness of 90 mils. 3/32 in.. Into the initial membrane fully embed a layer of spunbond polyester fabric reinforcing sheet with 4 in. side laps and 12 in.

head laps followed by an additional continuous monolithic coating of roofing membrane of 125 mils 1/8 in., resulting in a total minimum roofing membrane thickness of 215 mils, 7/32 in. at any location. Utilize methods recommended by the roofing membrane manufacturer. Apply additional material to correct areas deficient in thickness by procedures recommended by the membrane manufacturer.

D. Separator/Protection Sheet: Install flexible membrane, lapping joints a minimum of 3 in. to ensure complete coverage. Cover separator/protection sheet immediately with insulation.

E. Drainage Board: Install three dimensional molded panels in accordance with manufacturer's requirements.

F. Roofing Metal Work: Be responsible for the proper attachment of specified work to roofing metal or related work that is embedded in, or in contact with, and becomes an integral part of specified roofing or flashing system, even when such roofing metal or related work is provided under other Sections of the Specifications. Where flashings terminate against parapet walls, curbs, pipe and vent penetrations and other such obstructions, provide termination bars and pipe clamping rings as recommended by the roofing membrane manufacturer. Provide continuous sealant bead at top of termination bars and clamping rings.

G. Insulation: Install in accordance with insulation manufacturer's printed instructions. Loosely lay extruded insulation units over roofing membrane, with long joints of insulation in continuous straight lines and with end joints staggered between rows. Fit insulation neatly and accurately at walls, curbs and other projections and bring edges and ends of units into moderate contact with open joints. Install one or more layers of insulation to achieve required thickness over roofing membrane. Cut and fit to within 3/4 in. of projections and penetrations. Where overall insulation thickness is 2 in. or more, install required thickness in two or more layers with joints of each succeeding layer staggered over joints of previous layer a minimum of 6 in. in each direction.

H. Water Pervious Fabric Mat: Install water pervious fabric mat over insulation in accordance with the roofing membrane manufacturer's printed instructions. Install fabric mat over insulation, overlapping edges and ends at least 12 in. Do not end lap fabric sheets within 72 in. of roof perimeter. Extend fabric 2 in. to 3 in. above ballast at perimeter and penetrations. Apply additional layer of fabric around penetrations to prevent aggregate from getting between penetration and insulation. Do not cover drains or restrict water flow to drains.

I. Roof Paver Ballast

1. Paver Roof Ballast: As soon as possible after insulation is installed, but in no case exceeding the maximum time of exposure of the insulation permitted by the insulation manufacturer, apply precast units and pedestal supports at each corner directly over water pervious fabric in areas as shown and in accordance with final shop drawings.

a. Establish grid system matching grid system shown. Provide pedestals and shims at each corner and intersection of each paver to provide a level surface which will result in a level paver system with uniform open joint pattern.

b. In areas where entire roof is covered with precast ballast, cut precast pavers precisely around penetrations to form a tight joint and totally covering insulation and roof membrane.

c. Pedestals and shim plates are placed at intersection of gridline if finished surface is to follow slope of substrates. Paver size centerlines must be adhered to.

d. Level surface installation using adjustable pedestal system following manufacturer's installation procedure. No variances to system procedure allowed.

1) Minor height and pitch adjustments to be corrected using 1/8" shim plates.

e. Lay out pattern of precast units so that units terminate on an even line no more than 2 in. from the vertical surface or penetration, cutting units as necessary.

f. Install roof paver and paver pedestal at each corner in accordance with manufacturers written instructions and recommendations.

g. In corners, provide strapping over precast concrete pavers with 22 gauge x 3 in. wide x 12 ft. long stainless steel straps with stainless steel fasteners in configurations and methods as recommended by insulation manufacturer for building height and wind speeds noted. (Comply with Dow TechNote 508).

h. Tolerances:

1) Maximum of 1/16" height variation between adjacent pavers.

2) Individual pavers shall not vary more than 1/16" from level across width of the paver.

3) Paved areas shall not vary more than ¼" from level in a distance of 10' measured at any location and in any direction.

4) All joints to be 1/8 inch.

J. Garden Roof Installation

1. Protection Sheet/Root Barrier in areas as Scheduled for Roof Garden System: Install while flexible membrane is warm, lapping joints a minimum of 4 in. to ensure complete coverage. The protection sheet/root stop barrier shall be turned up all vertical, roofed/flashed surfaces to completely protect roofing and

flashings. Cover separator/protection sheet immediately with insulation.

2. Drainage Course in areas as Scheduled for Roof Garden System: Install three dimensional molded panels in accordance with manufacturer's requirements. Place expanded shale directly over drainage system at specified depth to meet fill and grade shape requirement. Cover expanded shale with filter cloth before placing growth media mix or surface treatment.

3. Moisture Retention Mat. Provide a layer of moisture retention mat installed over the protection sheet/root barrier or drainage course layer/ insulation, lapping adjacent rolls a minimum of 4 in. The moisture retention mat shall be turned up all vertical, roofed/flashed surfaces a minimum of 6 in. beyond the anticipated growth media level. Any excess shall be trimmed down to the level of the growth media.

4. Drainage Inspection Devices: Provide drain inspection device over each drain and other accessories within the soft landscape area. The drainage layer shall be close butted to the base of the inspection device. The filter sheet shall be dressed up all sides of the inspection device to growth media level. Provision shall be made to install and form a barrier between the vegetation and all vulnerable roof details, i.e. at parapets, outlets, vent pipes etc. The barrier must be a minimum of 12 in. wide, and consist of large rounded aggregate 3/8 in. to ¾ in.

5. Growth Media Installation

    a. Growth media shall be placed carefully to avoid damage or displacement of other materials such as walls, paving, drainage components, filter fabric, and roofing membrane.

    b. Growth media shall be placed to within 1 in. greater than final grade or to a depth of no greater than 8 in. and compacted. For final grades less than 8 in. only one round of compaction shall be performed and remaining growth media loosely placed such that top of growth media exceeds final grade by 1 in. For final grades greater than 8 in., place growth media at no greater than 6 in. and repeat procedure until growth media has been compacted within 1 in. of final grade.

    c. Compaction shall be performed with a 200 lb. – 300 lb. landscape roller or lightly compacted with a hand held mechanical compactor to achieve a 50% – 60% compaction as determined by ASTM D1557. After compaction remaining growth media shall be placed at 1 in. greater than final grade and thoroughly watered or jetted over entire area. Low settled areas shall be filled with additional growth media and re-wet to achieve uniform prescribed final grade.

    d. After compaction remaining growing media shall be placed at 1 inch greater than final grade and thoroughly

watered or jetted over entire area. Low settled areas shall be filled with additional growing media and re-wet to achieve uniform prescribed final grade.

e. Erosion Control Mat: The erosion control mat shall be installed directly over the growing media and properly anchored into place

1) Anchor fastening pattern is based on local wind speed, building height and roof slope.

6. Vegetation Installation

a. Vegetation planting shall be installed in accordance with the Installation and Maintenance Guidelines.

b. Plant materials shall not be installed between the fall frost date and the following spring frost date.

c. Growing media shall be thoroughly watered and saturated immediately prior to installing new plant material.

d. All vegetation shall be thoroughly watered and saturated immediately after installation. Media is saturated when water is seen flowing into roof drains from adjacent areas.

3.5 FIELD QUALITY CONTROL

A. Contractor's Quality Control Responsibilities: Contractor is solely responsible for quality control of the Work.

B. High Voltage Electronic Leak Detection: Perform leak testing by an electronic detection process administered by a certified High Voltage ELD tester and monitored by qualified testing agency as follows:

1. Test equipment shall consist of conductive phosphor bronze brush electrodes and a portable battery powered generator capable of providing variable DC current from 1000-30,000 volts at low amperage.

2. The ELD Technician shall connect one terminal of the generator to a ground in the assembly (typically a steel or concrete deck, or alternative grounding medium such as a conductive primer or metal grid). Connect the other terminal to the phosphor bronze brush. Calibrate the voltage level to the thickness of the membrane being tested.

3. The ELD Technician shall methodically pass the brush electrode over all testable vertical membrane surfaces in the contract and approximately 1 foot (25 cm) of horizontal membrane directly adjacent to the vertical membrane areas. Successive passes will overlap previous passes by a minimum of 3 inches (75 mm). Breaches will be identified when an audible alarm indicates that the electric current has passed through a defect and grounded to the conductive material beneath the membrane.

4. The ELD Technician shall mark breach locations on the membrane with spray paint, chalk, tape or other approved method.

C. Low Voltage Electronic Water Testing: Perform leak testing by an electronic detection process (Electric Field Vector Mapping) administered by a certified electric field mapping tester and monitored by qualified testing agency as follows:

1. Test the entire roofing membrane on an area-by-area basis as required by the conduct of the Work. Install stationary impulse conductor wire around perimeter of area to be tested. The testing agency will determine size and shape of area. Provide conductor wire consisting of braided polyethylene 1/16 in. (1.5mm) diameter interwoven with a minimum of six strands of stainless steel wire. Place conductor wire 6 in. (150mm) from perimeter and secure against accidental movement or damage. Place wire directly on membrane. Isolate metal items contacting the membrane by placing four to six additional stands of conductor wire to isolate the field or by removing the metal items temporarily if possible. Bring connection wires to an agreed upon location and place within watertight conduit and identified watertight junction box so as to allow for future testing.

2. Wet the membrane test area with water or other suitable conductor fluid prior to start of each test and maintain wet for duration of testing. Utilizing a potentiometer and two probes placed at the surface of the membrane detect the presence or absence of electrical flow across the surface of the membrane. Verify integrity of the membrane at drains and penetrations by localized testing.

3. Provide a report of each day's test results containing a written description and photograph of defects and any corrections made and a schematic CAD drawing indicating location of stationary conductor wire and of any defects found in testing to within 1 in. (25mm) of accuracy.

D. Water and Leak electronic testing may be conducted on an area by area basis as the Work permits but in no case shall less than 100% of the roof and waterproofing membranes be tested. If leaks occur, remove existing components and replace with new materials (matching existing) to eliminate the causes and sources of the leaks.

3.6 CITY OF NEW YORK'S MONITORING ACTIVITIES

A. City of New York's Testing Agency: A testing agency, engaged at the City of New York's expense, will perform the following activities to monitor the Contractor's Quality Control Program. The monitoring activities do not relieve the Contractor of responsibilities under the Contract.

1. The testing agency shall inspect and report on the following:

   a. Flashings: Inspection of flashings to assure manufacturer's quality requirements are maintained throughout the installation period.

   b. Membrane Thickness: Inspection of the membrane to verify thickness by taking random samples in locations selected by the Engineer. Take one (1) sample for each 100 $ft.^2$ prior to cooling of the membrane and installation of the protection sheet utilizing a pin or needle gauge as recommended by the membrane manufacturer. Testing agency shall submit written test results noting location and thickness.

   c. Electronic Water Test Observation: Observe electronic water testing and examine underside of decks and terminations for evidence of leaks during testing.

B. Contractor's Assistance to the City of New York's Testing Agency: Furnish the City of New York's Testing Agency with access to the Work, materials and facilities as required by the Agency. Provide adequate notice of construction activities to allow timely inspections and observation of Contractor tests, and be available for pre- installation meetings. Furnish the City of New York's Testing Agency with on-site office facilities.

C. Contractor's Responsibility

1. Upon award of Contract, complete the form furnished by the Inspection Agency.

2. Provide the Inspection Agency with safe access to the Work.

3. Notify the Inspection Agency whenever work is to be done, in sufficient time to arrange inspection.

4. Discontinue any practice immediately when notified which, in the Inspection Agency's opinion, is not in accordance with the Specifications or will act to the detriment of the system. The Inspection Agency will notify the City of New York, the Engineer, the Contractor and the manufacturer immediately of violations. Work affected by the practice will be subject to complete replacement.

5. Give written notice to the Inspection Agency stating that the installation has been completed in accordance with the Contract Documents and requesting that a final inspection be conducted.

3.7 VEGETATION MAINTENANCE

A. Contractor/Installer shall maintain plantings in accordance with the Installation and Maintenance Guideline.

B. Maintenance activities shall include, but are not limited to, the following:

1. Periodic on-roof monitoring of vegetation.

2. Watering to maintain proper growing media moisture content (especially during periods of hot and dry weather).

3. Weeding to remove unwanted vegetation from planted areas and vegetation free zones.

4. Removal of debris.

5. Reporting and photo-documentation of progress of vegetation during maintenance and warranty period.

C. Maintenance shall begin immediately after vegetation installation and shall continue through final acceptance and turn-over of the project to the City of New York.

D. Maintenance activities shall continue throughout the two-year warranty period (from date of vegetation installation) to keep vegetation warranty in effect.

3.8 ADJUSTING

A. Correct deficiencies in or remove fluid applied protected membrane roofing system components that do not comply with requirements. Repair substrates, and repair or reinstall components or system to a condition free of damage and deterioration at time of Substantial Completion and in compliance with warranty requirements.

3.9 PROTECTION

A. Protect adjacent construction from damage resulting from spillage, dripping and dropping of material. Prevent materials from entering and clogging drains and water conductors. Repair and restore, or replace other work which is soiled or damaged in connection with the performance of this work.

B. Until roofing membrane is protected with insulation and the ballast system, keep areas free from traffic and other trades. Upon completion of roofing, provide necessary temporary protection to prevent damage from any source.

END OF SECTION

SECTION 07 62 00 – SHEET METAL FLASHING AND TRIM

PART 1 - GENERAL

1.1 SUMMARY

A. General: Provide sheet metal flashing and trim in accordance with requirements of the Contract Documents.

B. Related Work Specified Elsewhere

1. Stainless steel flashing for CMU walls is specified in Section 04 20 00 “Masonry Units“.
2. Wood grounds, nailers, blocking, cants and other wood items required for complete roof installation is specified under Section 06 15 00 “Rough Carpentry”.
3. Roofing system is specified in Section 07 55 56 “Vegetated Fluid Applied Protected Membrane Roofing“.
4. Roofing system is specified in Section 07 55 66 “Fluid Applied Membrane Roofing“.
5. Sealants and joint fillers are specified under Section 07 92 00 “Joint Sealants”.
6. Counterflashing of mechanical and electrical equipment items penetrating roofing or waterproofing systems is specified in applicable specification sections.

1.2 REFERENCES

A. General: Comply with the applicable provisions of the referenced standards except as modified by governing codes and the Contract Documents. Where a recommendation or suggestion occurs in the referenced standards, such recommendation or suggestion shall be considered mandatory. In the event of conflict between referenced standards, this specification or within themselves, the more stringent standard or requirement shall govern.

1. International Nickel Company: "Stainless Steel Roofing, Flashing and Accessories Volume 3".
2. Sheet Metal and Air Conditioning Contractors National Association (SMACNA): "Architectural Sheet Metal Manual"
3. National Association of Architectural Metal Manufacturers (NAAMM): NAAMM "Metal Finishes Manual".
4. American Architectural Manufacturer’s Association (AAMA): AAMA 2605 “Voluntary Specification, Performance Requirements and Test Procedures for Superior Performing Organic Coatings on Aluminum Extrusions and Panels”

1.3 SUBMITTALS

A. Product Data: Submit manufacturer’s literature, specifications and

installation instructions describing the general properties of each material and accessory to be used in the Work.

B. Shop Drawings: Submit manufacturer approved shop drawings for the fabrication and installation of the Work. Prepare details at not less than 3 in. = 1 ft. minimum scale. Show complete information concerning fabrication, installation, joint details, fastenings contiguous construction and other information required.

C. Samples: Label samples to indicate product, characteristics, and location in the Work. Samples will be reviewed for color and appearance only. Furnish sufficient samples to establish the full range of colors and textures for materials exposed in the finished work. Compliance with other requirements is the responsibility of the Contractor

1. Samples of each metal required, minimum 12 in. sq.

D. Closeout Submittals Submit the following:

1. Warranties: Special warranties as specified.

1.4 QUALITY ASSURANCE

A. Qualified Installer: The entity performing the work of this section must, within the last five (5) consecutive years prior to the bid opening have successfully completed in a timely fashion at least three (3) projects similar in scope, size and type to the required work.

B. Field Samples: Prior to installation, provide a field sample for each type of flashing in the building at designated areas. Utilize the same materials and installation methods in the sample as required for the final Work. Schedule the installation so that the sample may be examined, and any necessary adjustments made, at least 1 week prior to date scheduled for commencing installation of the Work. When accepted, sample areas shall serve as the standard for materials, workmanship, and appearance for such Work throughout the project and shall remain a part of the final Work.

C. Regulatory Requirements: Comply with applicable requirements of the laws, codes, ordinances and regulations of Federal, State and Municipal authorities. Obtain necessary approvals from the NYC Building Department.

1.5 DELIVERY, STORAGE AND HANDLING

A. General: Deliver and store materials in manufacturer's original packaging labeled to show name, brand, type, and grade. Store materials in protected dry location off ground in accordance with manufacturer's instructions. Do not open packaging nor remove labels until time for installation

1.6 PROJECT/SITE CONDITIONS

A. Weather Conditions: Do not proceed with the Work during inclement weather nor when weather forecasts are unfavorable, unless the Work will proceed in accordance with the manufacturer's requirements and instructions.

1.7 WARRANTY

A. Warranty specified in this Article shall not deprive the City of New York of other rights the City of New York may have under other provisions of the Contract Documents and are in addition to and run concurrent with other warranties made by the Contractor under requirements of the Contract Documents.

1. Special Warranty: Provide a written warranty, for a period of two (2) years, warranting against leaks resulting from defects of materials or workmanship. Upon notification of such defects, within the warranty period, make the necessary repairs and replacements at the convenience of the City of New York.

PART 2 - PRODUCTS

2.1 SHEET METAL MATERIALS

A. Sheet Metal Materials

1. Stainless Steel Flashing (**FLH-01**): ASTM A666, Type 316, dead soft fully annealed except where harder temper required for forming or performance; 0.015 in. thick (28 gage) unless otherwise shown or specified, finish No. 2D.

B. Prefabricated Flashing System: The flashing closure system is specified herein by proprietary designation prefabricated flashings for column, pipe and other penetrants as manufactured by SBC Industries and establish the quality standards required for these systems. Equivalent products of other manufacturers will be considered provided they meet those established standards. Fabricated from 26 gage stainless steel type 304, with 2B finish, complying with ASTM A240, and in strict compliance with manufacturer's fabrication requirements.

1. Pipe Flashings: Provide fabrications as follows:

a. Fabrication of flashings for pipes, conduits and other round items penetrating, resting on or anchored to roof which allows a tubular flashing to be slipped over.

1) Form tubular flashing sleeve no less than 9 in. high and of proper diameter to provide min. 1/8 in. and max. 1/4 in. clearance form pipe or conduit.

2) Fabricate square flashing plate to a size 7-1/2 in. larger than protrusion. Punch hole of appropriate size in center and extrude surrounding material upward 1/4 in. providing a continuous vertical soldering flange and solder 9 in. high tubular flashing sleeve. Cut 1 in. min. radius on flashing plate corners.

3) Fabricate counter flashing 5 in. high with a diameter 1/2 in. to 2 in. larger.

4) Shop solder seams watertight.

b. Fabrication of flashings for connected pipes, conduits and

other round items not allowing a tubular flashing to be slipped over.

1) Form semi-cylindrical tubular flashing sleeves (180 deg.) not less than 9 in. high, tightly seam intersecting halves to mate snugly. Provide a split flashing plate with radial corners and being formed upward to provide a continuous soldering flange for semi-cylindrical sleeve engagement. Size each unit to allow for vibration and thermal movement of pipe or conduit with 1/8 in. minimum by 1/4 in. maximum.

2) Form cylindrical counter flashing 5 in. high with seamed edge to a diameter 1/4 in. larger than 9 in. high sleeve.

3) Provide conical sealant cover, sloped outward and downward at 30 deg. to 45 deg. from a horizontal plane, with an inside diameter equal to pipe or conduit size and an outside diameter 2 in. larger.

2. Column, Angles, Channels, Square Tubing and Beam Flashings: Provide fabrications as follows:

a. Form a 6 in. high two piece angular configuration similar to penetration but allowing 3/16 in. min. to 3/8 in. max. clearance in any direction. Fabricate flashing flanges in two pieces stainless steel; ASTM A240, 26 gauge, type 304, finish No. 2B, and shop solder to 6 in. angular stacks. Provide an umbrella type counter flashing conforming to protrusion. Extend 3/4 in. at 45 degree outward from angular stack flashing.

3. Custom Shapes: Provide custom shaped flashings for penetrants as shown or required formed to shape of penetrating elements, and counter flashed as required by manufacturer's specifications, recommendation and instructions to provide a water-proof, air tight system.

C. Surface Applied Reglets: Stainless steel Type 316; 0.018 in. thick; complete with factory punched slots, factory fabricated reglet corners, cap/counter flashing, sealant flange, neoprene-steel washers and other required accessories. Provide one of the following:

1. "SM Surface Mounted Reglet" (Fry Reglet Corp.).

2. “Type D Reglet” (Cheney Flashing Company).

3. “Two Piece Cap Flashing” (Keystone Flashing).

4. or approved equal.

2.2 AUXILIARY MATERIALS

A. Solder for Stainless Steel: ASTM B32; provide 60% tin- 40% lead solder, with acid-chloride type flux, except use rosin flux over tinned surfaces.

B. Fasteners: Screws, rivets and nails shall be non-corrosive, of same material as sheet metal flashing and trim or of compatible material. Match finish of exposed heads with material being fastened.

C. Metal Accessories: Provide sheet metal clips, cleats, straps, anchoring devices, and similar accessory units as required for installation of work, matching or compatible with material being installed, noncorrosive, size and gage required for performance.

D. Sealant: As specified in Section 07 92 00 Joint Sealants.

E. Foam Tape: ASTM D-1056; closed cell foam, PSA on one side, 1/4 in. or 3/8 in. x 1 in. wide.

F. Epoxy Seam Sealer: 2-part noncorrosive metal seam cementing compound, recommended by metal manufacturer for exterior/interior nonmoving joints including riveted joints.

G. Mastic Sealant: Polyisobutylene; nonhardening, nonskinning, non- drying, nonmigrating sealant.

H. Paper Slip Sheet: 5 lb. rosin-sized building paper.

I. Polyethylene Underlayment: Minimum 6 mil carbonated polyethylene film resistant to decay when tested in accordance with ASTM E154.

J. Dielectric Separator: Cold applied, asphalt emulsion type complying with ASTM D1187, non-sagging, resistant to severe corrosion conditions; applied in two coats for an overall minimum dry film thickness of 25 mils or heavy coating of epoxy paint in minimum 2.0 mil dry film thickness.

2.3 FABRICATION

A. General Metal Fabrication: Shop-fabricate work to greatest extent possible. Comply with details shown and with applicable requirements of SMACNA "Architectural Sheet Metal Manual" and other recognized industry practices. Fabricate for waterproof and weather-resistant performance, with expansion provisions for running work, sufficient to permanently prevent leakage, damage, or deterioration of the work. Form work to fit substrates. Comply with material manufacturer instructions and recommendations for forming material. Form exposed sheet metal flashing and trim work without excessive oil-canning, buckling, and tool marks, true to line and levels indicated, with exposed edges folded back to form hems.

B. Seams: Fabricate nonmoving seams in sheet metal flashing and trim with flat-lock seams. For metal other than aluminum, tin edges to be seamed, form seams, and solder. Form aluminum seams with epoxy seam sealer; rivet joints for additional strength where required.

C. Expansion Provisions: Where lapped or bayonet-type expansion provisions in work cannot be used or would not be sufficiently water/weatherproof, form expansion joints of intermeshing hooked

flanges, not less than 1 in. deep, filled with mastic sealant concealed within joints.

D. Sealant Joints: Where movable, non-expansion type joints are indicated or required for proper performance of work, form metal to provide for proper installation of elastomeric sealant, in compliance with SMACNA standards.

E. Separations: Provide for separation of metal from noncompatible metal or corrosive substrates by coating concealed surfaces at locations of contact, with dielectric coating or other permanent separation as recommended by manufacturer/fabricator.

PART 3 - EXECUTION

3.1 GENERAL

A. Manufacturer's Instructions: Prepare substrates, apply primers and install the work of this Section, including accessories in accordance with the manufacturer's instructions, except where more stringent requirements are shown or specified, and where project conditions require extra precautions or provisions to ensure satisfactory performance of the Work.

3.2 EXAMINATION

A. Verification of Conditions: Examine the areas to receive the Work and the conditions under which the Work would be performed. Contractor shall remedy conditions detrimental to the proper and timely completion of the Work. Do not proceed until unsatisfactory conditions have been corrected.

3.3 PREPARATION

A. Substrate Acceptability: Commencement of installation shall constitute acceptance of substrate conditions by the Installer.

B. Cleaning of Substrate Clean surfaces of laitance, dust, dirt, oil, wax and other foreign materials.

C. Piping, Conduit and Other Penetrations: Proceed with flashing work only after pipe sleeves, vents, curbs, inserts, drains, and other projections through the substrate to be flashed have been completed. Proceed only after concrete and masonry substrate defects, including honeycombs, voids, and cracks, have been repaired to provide a sound substrate free of forming materials, including reveal inserts.

3.4 INSTALLATION

A. General: Install the materials in accordance with SMACNA standards and the manufacturers' instructions, except where more stringent requirements are shown or specified. Conceal fasteners and joints wherever possible in exposed Work, and locate to prevent leakage. Maintain a water-tight installation at fasteners, joints and seams. In general, furnish metal flashings in 8 ft. lengths joined with flat locked soldered seams. Provide an expansion joint at not over 24 ft. on centers with a loose lock filled with sealant. Provide separation of dissimilar materials by coating or covering metal with inert material to prevent galvanic corrosion.

B. Stainless Steel: Follow guide specifications for "Stainless Steel Roofing, Flashing and Accessories" published by the International Nickel Company in their Design Consultant's Stainless Steel Library, Volume 3.

C. Temperature: Sheet metal flashing and trim shall be designed and detailed for a temperature of 70 deg. F. at time of installation with allowance made for a 150 deg. F. ambient temperature range. Make necessary adjustments for installations at other than design temperature.

D. Underlayment: Where stainless steel or aluminum is to be installed directly on cementitious or wood substrates, install a slip sheet of red rosin paper and a course of polyethylene underlayment.

E. Reglets: Install reglets to receive counterflashing in manner and by methods shown as recommended. Where shown in concrete, furnish reglets to trades of concrete work for installation as work of Division 3 sections. Where shown in masonry, furnish reglets to trades of masonry work, for installation as work of Division 4 sections. Install counterflashing in reglets, either by snap-in seal arrangement or by welding in place for anchorage and filling reglet with elastomeric sealant.

F. Metal Through-Wall Flashing: Provide continuous through-wall flashing, lap-seamed and soldered at splices and intersections, complete with preformed corners and end dams. Cover and seal Work as required for a minimum of 4” embedment.

G. Prefabricated Flashing System: Install prefabricated flashing system complete with base sleeves, cap flashing, tape, sealant, solder, fasteners and accessories, as shown, and as required for a waterproof, airtight installation.

3.5 CLEANING AND PROTECTION

A. Upon completion of Work, clean the exposed surfaces to make neat and obtain uniform appearance.

B. Protect the Work during the remainder of the construction period, so that there will be no indication of deterioration or damage at the time of acceptance by the City of New York.

END OF SECTION

SECTION 07 70 00 – ROOF AND WALL SPECIALTIES AND ACCESSORIES

PART 1 - GENERAL

1.1 SUMMARY

A. General: Provide roof and wall specialties and accessories in accordance with requirements of the Contract Documents.

B. Related Work Specified Elsewhere

1. Wood grounds, nailers, blocking, cants and other wood items required for complete roof installation is specified under Section 06 10 00 “Rough Carpentry”.

2. Prefabricated metal flashing system, sheet metal flashing and trim as part of roofing construction is specified in Section 07 62 00 “Sheet Metal Flashing and Trim”.

3. Sealants and joint fillers are specified under Section 07 92 00 “Joint Sealants”.

4. Fluid applied protected membrane roofing system is specified in Section 07 55 56 “Fluid Applied Membrane Roofing” and Section 07 55 66 “Vegetated Fluid-Applied Protected Membrane Roofing”.

1.2 REFERENCE

A. General: Comply with the applicable provisions of the referenced standards except as modified by governing codes and the Contract Documents. Where a recommendation or suggestion occurs in the referenced standards, such recommendation or suggestion shall be considered mandatory. In the event of conflict between referenced standards, this specification or within themselves, the more stringent standard or requirement shall govern.

1. American Welding Society (AWS)

   a. D1.1 "Structural Welding Code - Steel"

   b. D1.2 "Structural Welding Code - Aluminum"

   c. D1.3 "Structural Welding Code - Sheet Steel"

2. National Association of Architectural Metal Manufacturers (NAAMM): "Metal Finishes Manual"

3. National Roofing Contractors Association (NRCA)

   a. "Roofing and Waterproofing Manual"

   b. "Handbook of Accepted Roofing Practices"

4. Sheet Metal and Air Conditioning Contractors National Association, Inc. (SMACNA): “Architectural Sheet Metal Manual”

5. American Architectural Manufacturer's Association (AAMA): 2605 "Voluntary Specification, Performance Requirements and Test Procedures for Superior Performing Organic Coatings on Aluminum Extrusions and Panels"

1.3 SYSTEM DESCRIPTION

A. Performance Criteria

1. General Performance: Roof and wall specialties and accessories shall withstand exposure to weather and resist thermally induced movement without failure, rattling, leaking, or fastener disengagement due to defective manufacture, fabrication, installation, or other defects in construction.

2. Loading Criteria: Design, fabricate and install roof and wall accessories to withstand the inward and outward wind loads, live loads, building movement, and wind uplift loads shown.

   a. Provide copings and accessories capable of being used by personnel from roof access or from scaffolding capable of supporting a minimum additional concentrated live loading of 200 psf or a uniform load of 150 lbs./ft. (whichever is greater) without permanent deflection, deformation or leakage of air or water. Include stiffeners and supports as required for strength and rigidity. Include brackets, plates and straps in the assemblies for support of contiguous work.

3. Temperature Requirements: Design, fabricate and install component parts to provide for expansion and contraction over an ambient temperature range of (120 deg. F.) and a surface temperature range of (180 deg. F.) without buckling, sealed joint failure, undue stress on members or anchors, and other detrimental effects.

4. Watertightness: Provide tight joints and effectively seal roof and wall specialties and accessories against water leakage and air infiltration. Water leakage is defined as the appearance of uncontrolled water, other than condensation, on any inboard part of a roof and wall specialty or roof and wall accessory.

5. Design Modifications: Make design modifications of work shown only as may be necessary to meet performance requirements and coordinate the work. Variations in details and materials which do not adversely affect appearance, durability or strength shall be submitted to the Engineer for review.

1.4 SUBMITTALS

A. Product Data: Submit for Engineer's action. Submit manufacturer's literature, specifications and installation instructions describing the general properties of each material and accessory to be used in the Work

B. Shop Drawings: Submit for Engineer's action. Submit shop drawings for the fabrication and installation of the Work. Prepare details at not less than

3 in. = 1 ft. minimum scale of roof and wall accessories detailing fabrication and erection of each roof and wall specialty and accessory item, including dimensioned plans and elevations, and details of sections, connections, anchorage and accessory items. Provide templates for anchors and bolts specified for installation under other Sections. Show complete information concerning fabrication, installation, joint details, fastenings and other information required. In addition, locate expansion joints.

1. Roof Coordination Drawings: As part of the shop drawing submittal, provide coordination drawings showing complete roof plans, drawn to scale, and coordinating penetrations and roof-mounted items noting the following:

    a. Size and location of roof accessories specified in this Section.

    b. Method of attaching roof accessories to roof or building structure including flashing requirements.

    c. Other roof-mounted items including mechanical and electrical equipment, ductwork, piping, and conduit.

    d. Required clearances for roof accessories.

C. Samples: Submit for Engineer’s action. Label samples to indicate product, characteristics, and location in the Work. Samples will be reviewed for color and appearance only. Furnish sufficient samples to establish the full range of colors and textures for materials exposed in the finished work. Compliance with other requirements is the responsibility of the Contractor.

1. Color and Finish Samples: Samples for each finish and color required. Submit sample finishes on aluminum having the specified alloy, temper, substrate preparation treatment and thickness of metal required for the Work. Provide 12 in squares for sheet showing the maximum range or variation in color and shade.

D. Quality Control Submittals: Submit for Engineer’s information.

1. Certificates:

    a. Document Review: Before commencing work, submit a written statement signed by the Contractor and the Installer certifying that the Contract Documents, shop drawings and product data have been reviewed with material manufacturers' qualified technical representatives and that they agree that the selected materials are proper, compatible with contiguous materials and adequate for the application shown.

    b. Manufacturer's and fabricator's certifications indicating that the PVDF coating complies with the Contract Documents.

E. Closeout Submittals Submit for City of New York’s documentation.

1. Warranties: Special warranties as specified.

2. Maintenance Manuals: Two (2) complete maintenance manuals describing the materials, devices and procedures to be followed

in cleaning and maintaining the Work. Include manufacturers' brochures and lists describing the actual materials used in the Work.

1.5 QUALITY ASSURANCE

A. Single-Source Responsibility: Obtain each roof specialty from one source of a single manufacturer. Obtain accessory products used in conjunction with roof accessories from each roof specialty manufacturer or from sources acceptable to each roof specialty manufacturer. The fabricator/manufacturer shall must, for the past five (5) years, have been regularly engaged in the manufacture of material or equipment similar in type to that required for this Project. Such material or equipment provided by the manufacturer must have been in satisfactory service for not less than five (5) years.

B. Qualified Installer: The entity performing the work of this section must, within the last five (5) consecutive years prior to the bid opening have successfully completed in a timely fashion at least three (3) projects similar in scope, size and type to the required work.

C. Regulatory Requirements: Comply with applicable requirements of the laws, codes, ordinances and regulations of Federal, State and Municipal authorities. Obtain necessary approvals from the NYC Building Department.

D. Product Options: Information on Drawings and in Specifications establishes requirements for system's aesthetic effects and performance characteristics. Aesthetic effects are indicated by dimensions, arrangements, alignment, and profiles of components and assemblies as they relate to sightlines, to one another, and to adjoining construction. Performance characteristics are indicated by criteria subject to verification by one or more methods including preconstruction testing, field testing, and in-service performance.

1.6 DELIVERY, STORAGE AND HANDLING

A. Delivery: Deliver materials in tagged bundles or in manufacturer's unopened containers fully identified to show name, brand, type, grade and thickness. Store, protect and keep materials dry.

B. Protective Coatings or Coverings: Temporary coating and coverings may be furnished at manufacturer's or Contractor's option to protect the Work during shipment and construction. Such protection shall avoid development of non- uniformity in finishes, shall not impart a residue which would adversely affect the adhesion of sealants, nor cause other deleterious effects in the Work.

1.7 PROJECT/SITE CONDITIONS

A. Weather Conditions: Do not proceed with the Work during inclement weather nor when weather forecasts are unfavorable, unless the Work will proceed in accordance with the manufacturer's requirements and instructions.

1.8 WARRANTIES

A. Warranties specified in this Article shall not deprive the City of New York of other rights the City of New York may have under other provisions of the Contract Documents and are in addition to and run concurrent with other warranties made by the Contractor under requirements of the Contract Documents.

1. Special Roof Access Hatch and Skylight Warranties: Submit for City of New York's documentation. Furnish two (2) year written warranty in form stipulated by Engineer, signed by the Contractor and Installer, agreeing to repair or replace Work which has leaked or otherwise failed as a result of defects in materials or workmanship. Upon notification of such defects, within the warranty period, make necessary repairs or replacement at the convenience of the City of New York.

2. Special Warranty, PVDF Coatings: Provide a written warranty, from the manufacturer and finisher of PVDF coating system and the finisher, directly to the City of New York, for a period of 20 years, warranting against the loss of film integrity, chalking, fading, non-uniformity, corrosion and the overall performance of color of the PVDF coatings. Upon notification of such defects, within the warranty period, make the necessary replacements at the convenience of the City of New York.

a. Color retention not to exceed 5ΔE Units (Hunter) color change as calculated in accordance with ASTM D2244 on exposed surfaces cleaned with clean water and a soft cloth.

b. Degree of chalking not to exceed rating No. 8 for colors and No. 6 for whites when measured in accordance with ASTM D4214 Test Method, Test Method A on exposed unwashed surfaces.

PART 2 - PRODUCTS

2.1 MATERIALS

A. Galvanized Steel: ASTM A653, Hot-dip galvanized with G90 coating (minimum spangle), either commercial quality or structural quality, Grade 33, unless another grade is required for design loads.

B. Steel Shapes: ASTM A36, hot-dip galvanized to comply with ASTM A123, unless otherwise indicated.

C. Stainless Steel Flashing: ASTM A666 , Type 316 dead soft fully annealed except where harder temper required for forming or performance; 0.015 in. (28 gauge) thick unless otherwise shown, finish No. 2D. Provide 60% - 40% tin/lead solder, with acid-chloride type flux, except use rosin flux over tinned surfaces in accordance with ASTM B32.

2.2 FASTENERS, ANCHORAGE DEVICES AND REINFORCING

A. Aluminum Angles, Plates, Bars, and other Aluminum Members

Required to Join or Reinforce Assembly of Aluminum Components: Alloys recommended by manufacturer or fabricator to develop required strength of assembly.

B. Fasteners and Anchorage Devices: Stainless steel, type, grade, class and style best suited for the respective purpose. Use countersunk flathead Phillips type machine screws for exposed fasteners except where Allen head screws are required. Finish of fasteners shall match finish of contiguous material.

2.3 AUXILIARY MATERIALS

A. Sealant: Refer to Specification Section 07 92 00 "Joint Sealants".

B. Insulation: Refer to Specification Section 07 21 00 "Building Insulation".

C. Gaskets: Manufacturer's standard tubular or fingered design of neoprene, EPDM, or PVC; or flat design of foam rubber or sponge neoprene.

D. Wood Nailers: Pressure treated lumber in accordance with Section 06 15 00 “Rough Carpentry” but in no case less than 1-1/2 in. thick.

E. Other Materials: Manufacturer's standard for the product specified.

2.4 FINISHES

A. Steel:

1. General: Clean, treat and shop-prime the metal surfaces of roof and wall specialty and accessory items, unless otherwise specifically noted. Clean the metal surfaces to remove dirt, rust, or other deleterious matter, and prepare for painting.

2. Galvanized Steel: Clean and prepare surfaces in accordance with SSPC SP- 1 solvent cleaning.

B. Aluminum:

1. General: Clean surfaces with inhibited chemicals and acid-chromate fluoride- phosphate treatment, AA-C12C42 in accordance with Aluminum Association standards.

2. Finishes: Remove die markings prior to finishing operations. Where necessary to remove die markings from any part of the work, members must be finished by the same process, whether or not die markings exist. Perform this work in addition to the finish specified. Scratches, abrasions, dents and similar defects are unacceptable.

a. Fluoropolymer PVDF coating 3 Coat System: Standard 3-coat, thermocured system composed of specially formulated inhibitive primer, fluoropolymer color coat, and clear fluorocarbon topcoat complying with AAMA 2605 and AA-C12C42R1x in custom colors and gloss as selected, using 70% minimum polyvinylidene fluoride resin by weight either "Kynar 500 or Hylar 5000 Fluorocarbon Resin" (Arkema Inc. or Solvay Solexis, Inc. or approved equal), applied to a total dry film thickness of 1.6 mil.

3. Primer: Provide corrosion-inhibiting primer paint of type suitable to receive the intended field-applied finish paint such as catalyzed epoxy enamel. Shop- apply primer paint to uniform 2 mils dry film thickness in accordance with paint manufacturer's recommendations.

C. Galvanizing Repair Paint: Zinc rich paint for repairing galvanized surfaces in accordance with ASTM A780.

D. Dielectric Separator: Cold applied, asphalt emulsion type complying with ASTM D1187, non-sagging, resistant to severe corrosion conditions; applied in two coats for an overall minimum dry film thickness of 25 mils or heavy coating of epoxy paint in minimum 2.0 mil dry film thickness.

2.5 FABRICATION

A. Shop Fabrication: Shop fabricate each unit to the extent possible, complete with framing, structure, flashing flanges, accessories, anchorage and other components required for a secure watertight installation. Include supplementary parts necessary to complete work though not definitely shown or specified.

B. Welding, Cutting, Drilling and Fitting: Complete the welding, cutting, drilling and fitting of joints prior to finishing. Weld with electrodes and by methods recommended by the aluminum manufacturer in accordance with applicable recommendations of the AWS. Use only methods which will avoid distortion or discoloration of exposed faces. Grind weld areas smooth and restore mechanical finish condition before proceeding with other treatment.

C. Fasteners: Conceal fastenings unless otherwise shown or specified. Do not use self tapping screws for any fastener under load. Where fasteners screw-anchor into aluminum members less than 1/8 in. thick, reinforce the interior with aluminum or nonmagnetic stainless steel to receive screw threads, or provide standard noncorrosive pressed-in splined grommet nuts.

2.6 FABRICATION, SPECIFIC ITEMS

A. Roof Access Hatches: Provide prefabricated roof hatches fabricated as follows: Covers shall be 14 gauge paint bond galvanized steel with 3 in. beaded welded flange, covering 1 in. thick fiberglass insulation with a 22 gauge galvanized steel interior liner. Curb shall be 14 gauge galvanized steel 12 in. high covering 1 in. thick fiberboard insulation. Cover shall have a heavy extruded EPDM rubber gasket that is bonded to the cover interior to assure a continuous seal when compressed to the top surface of the curb. Provide a 14 ga. galvanized steel exterior curb cover fully welded and made watertight. Provide 5 deg. pitch on curb to deck to allow for water and snow runoff. Entire hatch to have 14 gauge galvanized steel cap flashing fully welded. Provide stainless steel hardware, including a positive hold/release mechanism, heavy pintle hinges, compression spring operators, heavy duty shock absorbers, pull rings for inside and outside operation, neoprene draft seals and padlock hasps inside and out. Provide one of the following:

1. Single Leaf (**RH-01**) : Provide one of the following, with Safety Post and Railing System:
    a. "Type S" (The Bilco Co.).
    b. "B-RHG Series" (Babcock-Davis).
    c. “Ladder Hatch Model LH” (Dur-Red Products).
    d. Or approved equal.
2. Safety Posts for Roof Access Hatches: Provide black enameled steel spring balanced safety posts mounted on top two rungs of ladder which telescopes up and down, and locks in the upright position.
    a. “LadderUP Model LU-1" (The Bilco Co.) shall be the basis of design but not intended to imply a preference for a specific product.
    b. Other manufacturers include the following:
        1) Babcock-Davis.
        2) Dur-Red Products.
        3) or approved equal.
3. Safety Railing System for Roof Access Hatches: Provide posts and rails of pultruded fire retardant, fiberglass-reinforced polymer (FRP). FRP material shall be molded-in, high visibility, safety yellow color and is treated with a UV inhibitor. Mounting brackets shall be fabricated from 1/4" thick hot dip galvanized steel. Gate hinges and post guides shall be constructed of 6063- T5 aluminum and torsion rod of type 302 stainless steel. All fasteners shall be type 316 stainless steel. Hatch rail system shall satisfy the requirements of OSHA 29 CFR 1910.23 and meet OSHA strength requirements with a safety factor of two.
    a. “Bil-Guard Hatch Railing System" (The Bilco Co.) shall be the basis of design but not intended to imply a preference for a specific product.
    b. Other manufacturers include the following:
        1) Babcock-Davis.
        2) Dur-Red Products.
        3) or approved equal.
    c. Provide high-performance painted finish.

B. Tubular Skylight (**LT-01**): Transparent roof-mounted skylight dome and self-flashing curb, reflective tube, and ceiling level diffuser assembly, transferring sunlight to interior spaces; complying with ICC AC-16 as indicated on the Drawings and as follows:
    1. Provide Solatube Model 160 DS 10 Inch diameter daylighting system as basis of design consisting of roof dome, reflective tube, and diffuser assembly; in a configuration as indicated

on the Drawings.

a. Model: “Solatube Model 160 DS” as manufactured by Solatube International, Inc. but not intended to imply a preference for a specific product.

b. Other tubular skylights models and manufacturers include the following:

1) “Sun Tunnel” as manufactured by Velux USA.

2) “LightFlex” as manufactured by Sunoptics.

3) or approved equal.

2. Roof Dome Assembly: Transparent, UV and impact resistant dome with flashing base supporting dome and top of tube.

a. Outer Dome Glazing: 0.125 inch (3 mm) minimum thickness injection molded acrylic; UV inhibiting, impact modified acrylic blend.

1) Prism optic molded into outer dome to capture low angle sunlight and limit high angle sunlight.

b. Inner Dome Glazing: 0.115 inch (2.9 mm) minimum thickness high impact injection molded acrylic rated for high velocity wind zones.

c. Tube Ring: Attached to top of base section; 0.090 inch (2.3 mm) nominal thickness injection molded high impact acrylic; prevent thermal bridging between base flashing and tubing; channel condensed moisture out of tubing.

1) Dome Seal: Polyethylene foam seal, black, 0.13 inch (3.2 mm) thick by 10.73 (272.5 mm) diameter, 2 PCF polyethylene foam.

2) Light tracking reflector, made of aluminum sheet, thickness 0.015 inch (0.4 mm). Positioned in the dome to capture low angle sunlight.

3) Dome Edge Protection Band: Aluminized steel nominal thickness of 0.028 inches (0.7 mm).

3. Roof Flashing Base:

a. Provide one piece, seamless, leak-proof flashing functioning as base support for dome and top of tube. Sheet steel, corrosion resistant conforming to ASTM A 653/A 653M or ASTM A 463/A 463M or ASTM A792/A 792M, 0.028 inch (0.7 mm) plus or minus .006 inch (.015 mm) thick. Provide the following:

1) Base: As indicated on drawing.

2) Flashing Insulator: Thermal isolation material for use

under flashing.

3) Metal Roof Flashing Kit.

4) Roof Flashing Turret Extensions: Provide manufacturer's standard extension tubes as required and as indicated on drawings.

4. Extension Tubes: Provide aluminum sheet, thickness 0.015 inch (0.4 mm) and as follows:

a. Reflective Tubes: Reflective angle adapter tube (Top and Bottom Tubes), providing angle adjustment required and as indicated on drawings.

b. Interior Finish: Ultra-high Visible Light reflectance with Ultra-low Infrared (IR) reflectance.

c. Thermal Insulation Panel: High-performance dual-glazed, tube insulation system.

5. Light Diffuser:

a. Upper glazing: Provide PET plastic with EPDM low density sponge. Minimize condensation and bug, dirt, and air infiltration. The nominal thickness is 0.039 inches (0.99 mm).

1) Natural Effect Lens: Type LN.

b. Lower glazing with integral injection molded acrylic Dress Ring. Nominal thickness is 0.110 inches (2.8 mm)

1) Fresnel Lens Diffuser: Molded polycarbonate plastic, nominal thickness 0.022 inches (0.61 mm) with injection molded acrylic Diffuser Trim Ring.

PART 3 - EXECUTION

3.1 EXAMINATION

A. Verification of Conditions: Examine substrates, adjoining construction and conditions under which Work is to be installed. Do not proceed with work until unsatisfactory conditions have been corrected. Examine walls, roof edges, and parapets for suitable conditions for manufactured roof and wall specialties. Verify that substrate is sound, dry, smooth, clean, sloped for drainage, and securely anchored. Proceed with installation only after unsatisfactory conditions have been corrected

B. Field Measurements: Verify measurements and dimensions at the job site and cooperate in the coordination and scheduling of the work of this Section with the work of related trades (with particular attention given to the installation of items embedded in concrete and masonry).

3.2 PREPARATION

A. Substrate Acceptability: Inspect areas and accept surfaces designated to receive roof and wall specialties and accessories, as satisfactory for the reception of the Work specified in this Section, without conflict with "Warranty" requirements. Commencement of installation shall constitute acceptance of substrate conditions by the Installer.

B. Substrates: Clean the substrates to remove dirt, loose particles and deleterious matter which would impair the Work. Patch cracks and voids as required to obtain a sound surface. Commencement of installation shall constitute acceptance of substrate conditions by the Installer.

3.3 INSTALLATION

A. General: Provide access hatches, prefabricated flashing, equipment hatches, skylights, and other roof and wall accessories to provide a watertight installation. Comply with manufacturer's instructions and the "Architectural Sheet Metal Manual" published by the Sheet Metal and Air Conditioning Contractors National Association, Inc. Set units level and plumb, true to line and coordinate with other work. Anchor securely in place by bolting to the substrate or as recommended by manufacturer. Set flanges in an adhesive compatible with the roof and wall system materials and coordinate with the work specified.

B. Temperature at Time of Installation: Roof and wall specialty and accessory work shall be designed and detailed for a surface temperature of 70 deg. F. at time of installation. Make necessary adjustments for installations at other than design temperature.

C. Cap and/or Counter Flashing: Where cap and/or counter flashing is required as component of accessory or elsewhere shown, install to provide adequate waterproof overlap with roofing or roof flashing (as counter-flashing) or separately as its own component. Seal with thick bead of mastic sealant, except where overlap is indicated to be left open for ventilation.

D. Prefabricated Flashing: Refer to Section 07 62 00 “Sheet Metal Flashing and Trim” for prefabricated flashing system. Install prefabricated flashing system complete with base sleeves, cap flashing, tape, sealant, solder, fasteners and accessories in accordance with manufacturer's strict installation instructions, as shown, and as required for a waterproof, airtight installation.

E. Installation of Hatches: Install hatches in accordance with manufacturer’s written instructions and recommendations coordinated with specified roofing system to provide a water and weather tight installation. Test-operate units with operable components. Clean and lubricate joints and hardware. Adjust for proper operation.

F. Installation of Curbs: Install roof curbs in accordance with manufacturer’s written instructions and recommendations coordinated with specified roofing system to provide a water and weather tight installation.

G. Installation of Skylights: Install skylights in accordance with manufacturer’s written instructions and recommendations coordinated with specified roofing system to provide a water and weather tight installation.

H. Dissimilar Materials: Coat concealed contact surfaces of dissimilar metals and metals contacting concrete with dielectric separator.

3.4 ADJUSTING

A. Upon completion of Work, repair leaks and other defects including surfaces which have been stained, marred or otherwise damaged. Remove flux residue with a solution of washing soda or ammonia, then drench with clear water. Replace components which cannot be satisfactorily repaired.

3.5 PROTECTION

A. Protect the Work during shipment, storage, erection and construction so as to avoid damage or other deleterious effects in the Work.

END OF SECTION

SECTION 07 84 00 – FIRESTOPPING

PART 1 - GENERAL

1.1 SUMMARY

A. General: Provide Firestopping in accordance with requirements of the Contract Documents. Firestopping within the context of this specification shall encompass fire stops, fire resistive joint systems and perimeter fire barriers.

B. Related Work Specified Elsewhere

1. Openings

a. Fire Rated: Metal sleeves for fire rated openings shall be provided under applicable mechanical, electrical, plumbing and fire protection specifications sections.

b. Non-Rated: Non-rated openings shall be sealed under applicable mechanical and electrical specification sections.

1.2 REFERENCES

A. General: Comply with the applicable provisions of the referenced standards except as modified by governing codes and the contract documents. Where a recommendation or suggestion occurs in the referenced standards, they shall be considered mandatory. In the event of conflict between referenced standards, this specification or within themselves, the more stringent standard or requirement shall govern.

1. American Society for Testing and Materials (ASTM):

a. ASTM E84, “Standard Test Method for Surface Burning Characteristics of Building Materials”.

b. ASTM E119, “Standard Test Methods for Fire Tests of Building Construction and Materials”.

c. ASTM E814, “Standard Test Method for Fire Tests of Through- Penetration Fire Stops”.

d. ASTM E1399, “Standard Test Method for Cyclic Movement and Measuring the Minimum and Maximum Joint Widths of Architectural Joint Systems”.

e. ASTM E1725, “Standard Test Methods for Fire Tests of Fire-Resistive Barrier Systems for Electrical System Components”.

f. ASTM E1966, “Standard Test Method for Fire-Resistive Joint Systems”.

g. ASTM E2174, “Standard Practice for On-Site Inspection of Installed Fire Stops”.

h. ASTM E2307, “Standard Test Method for Determining Fire Resistance of Perimeter Fire Barrier Systems Using Intermediate-Scale, Multi- Story Test Apparatus”.

i. ASTM E2837 “Standard Test Method for Determining the Fire Resistance of Continuity Head-of-Wall Joint Systems Installed Between Rated Wall Assemblies and Nonrated Horizontal Assemblies”

2. Factory Mutual Research (FM): FM 4991, “Approval of Firestop Contractors”.

3. International Firestop Council (IFC): “Recommended IFC Guidelines for Evaluating Firestop Systems Engineering Judgments”.

4. National Fire Protection Association (NFPA): NFPA 285, “Standard Method of Test for the Evaluation of Flammability Characteristics of Exterior Non-Load Bearing Wall Assemblies Containing Combustible Components Using the Intermediate-Scale, Multi-Story Test Apparatus”.

5. Underwriters Laboratories Inc. (UL):

a. UL “Fire Resistance Directory”.

b. ANSI/UL 263, “Standard for Fire Tests of Building Construction and Materials”.

c. ANSI/UL 723, “Standard Test for Surface Burning Characteristics of Building Materials”.

d. ANSI/UL 1479, “Standard for Fire Tests of Through-Penetration Firestops”.

e. ANSI/UL 2079, “Standard for Tests for Fire Resistance of Building Joint Systems”.

1.3 SYSTEM DESCRIPTION

A. Performance Requirements: Provide firestop materials and systems produced, tested and installed to resist the spread of fire and the passage of smoke and gases through openings in fire rated assemblies, in accordance with ANSI/UL 263 (ASTM E119).

B. Firestop System Tests and Ratings: Provide materials which have been tested and rated as systems applicable to each firestop condition in the Work, as listed by UL “Fire Resistance Directory” or by other qualified testing agency acceptable to the Engineer.

1. Test methods are specified by reference to standards listed in the UL “Fire Resistance Directory”, and also by reference to equivalent (ASTM) standards for use in comparison with ratings from other acceptable testing agencies. In the event of a discrepancy in methods or ratings, the provisions of UL standards shall apply.

C. Leakage: Provide systems rated to function as an effective airtight seal preventing passage of smoke and gases in normal service as well as

under exposure to heat and fire conditions. Do not use materials to function as air seals if such materials are known to shrink with curing or aging.

1. Provide through-penetration and fire-resistive joint systems subjected to an air leakage test conducted in accordance with Standard, ANSI/UL1479 and/or ANSI/ UL2079 with published L-Ratings for ambient and elevated temperatures as evidence of the ability of the through-penetration or fire- resistive joint system to restrict the movement of smoke.

D. Building Movement: Provide systems rated to withstand building movements, including thermal movements, loading deflections, shrinkage, creep and similar movements, when tested in accordance with the specified standards. In addition, provide firestopping sufficiently flexible to accommodate motion such as pipe vibration and water hammer without damage to the seal.

1. Provide fire-resistive joint sealants designed to accommodate a specific range of movement and tested for this purpose in accordance with a cyclic movement test criteria as outlined in ASTM E1399, ASTM E1966 or ANSI/ UL 2079.

E. Compatibility: Provide only the firestop materials which are explicitly recommended by the manufacturer for the application, and which have been determined by tests to be totally compatible with the adjoining construction and each other, as stated in the manufacturer's published data or certified by the manufacturer for each application.

F. Material Content: Provide firestop materials which are non-toxic, non-hazardous, do not contain asbestos fibers or dust particles nor other substance prohibited by law, and do not require hazardous waste disposal of used containers. Provide firestopping that upon curing, do not re-emulsify, dissolve, leach, breakdown or otherwise deteriorate over time from exposure to atmospheric moisture, sweating pipes, ponding water or other forms of moisture characteristic during and after construction.

G. Coordination with Insulation Coverings: Provide firestopping which does not require the removal of insulation coverings integral to the penetrating item. Insulation coverings include thermal and acoustical insulations and their protective jackets and coverings and insulation/coverings for electrified components.

H. Surface Burning Characteristics: Provide firestop materials rated not more than flame spread 25 and smoke developed 450, when tested in accordance with ANSI/UL 723 (ASTM E84).

I. Water Resistance: Provide firestop systems resistant to degradation from moisture during normal service before exposure to heat and fire. Firestop systems used in the following locations shall also function as a watertight seal preventing passage of water.

1. Penetrations in exterior wall and roof construction.

2. Penetrations in mechanical and electrical equipment rooms, janitorial rooms or closets, toilet and shower rooms, garage and loading dock areas, and rooms or spaces having a floor drain. Wall penetrations in such spaces where any portion of the firestop is 3 in. or less above the floor.

J. Through-Penetration Firestop Systems: Provide systems tested in accordance with ANSI/UL 1479 or ASTM E814 methods and a positive pressure differential not less than 0.01 in. water column and classified with ratings for fire resistance, temperature rise, leakage, and movement capability to meet the specified requirements.

1. Flame Rating: For gypsum board construction, provide systems having an F rating equal to, but not greater than, the fire-resistive rating of the surrounding gypsum board construction. For non-gypsum board construction, provide systems having an F rating equal or greater than the fire-resistive rating of the surrounding construction, but not less than 1-hour.

2. Temperature Rating: Provide systems having a T rating equal to the F rating, except where a T rating for the firestop condition is specifically exempted by the applicable code.

3. Water-Tight Rating: Provide systems having a W rating of Class 1 with resistance up to 3 ft. of water pressure for firestopping at locations where a watertight seal is required.

K. Firestop Joint Systems: Provide systems tested in accordance with ANSI/UL 2079 (ASTM E1966), under a positive pressure differential not less than 0.01 in. water column, and classified with ratings for fire resistance, leakage, and movement capability to meet the specified requirements.

L. Perimeter Fire Containment Systems: Provide systems tested in accordance with NFPA 285 and ANSI/UL 2079 (ASTM E2307 and E1966), under a positive pressure differential not less than 0.01 in. water column, and classified with ratings for integrity, insulation, leakage, and movement capability to meet the specified requirements.

M. Chase Walls: Penetrants passing through fire-resistance rated floor-ceiling assemblies contained within chase wall assemblies shall be protected with products tested by being fully exposed to the fire outside of the chase wall. Systems within the UL Fire Resistance Directory that meet this criterion are identified with the words “Chase Wall Optional”.

N. Accessories: Provide components for each firestopping system that are needed to install fill materials. Use only components specified by the firestopping manufacturer and approved by the qualified testing and inspecting agency for the designated

fire-resistance-rated systems. Accessories include but are not limited to the following items:

1. Permanent forming/damming/backing materials.

2. Temporary forming materials.

3. Substrate primers or bond breakers.

4. Collars.

5. Steel sleeves.

O. Firestopping Exposed to View: For firestopping exposed to view, traffic, moisture, and physical damage, provide products that do not deteriorate when exposed to these conditions.

1.4 SUBMITTALS

A. Combined Submittals for Firestop Systems: Combine the submittals required for every component part in the various firestop systems to be used in the Work. Show in the submittals that the firestop systems have received the prior approval of the Contractor, the single firm awarded the firestopping Work, and the manufacturer of each principal component.

B. Product Data: Submit for Engineer's action. Submit manufacturer's literature, specifications and installation instructions describing the general properties of each material and accessory to be used in the Work. Product Technical Data Sheets for each material component required as shown within the firestop system drawing(s) shall be included in the submittal.

C. Shop Drawings: Submit for Engineer's action. Furnish shop drawings or full size 8- 1/2 in. x 11 in. system drawings to include the information that is typically contained within a UL System Drawing for each type firestopping condition for the fabrication and installation of the Work. Include illustrations from a qualified testing and inspection agency, which are applicable to every firestop system and indicate configuration of the construction and penetrating item. Furnish the following information in the form stipulated by Engineer.

1. Indicate for each firestopping condition the specific firestop system and construction assembly, including size and configuration of penetrations or voids, the thickness and attachment of materials, and the surrounding construction. Indicate the material, size and function of the penetrant. List the tested performance ratings of the firestop system for each specific application as well as fire resistance rating of the surrounding construction.

2. Furnish a legend indicating location of each firestop system in the Work.

3. Identify each specific firestop system with a type designation specific to the Project and include in location legend. Indicate corresponding testing agency and system identification with year of test.

4. Identify each condition for which there is no tested and rated firestop system in existence, and furnish a certified design suitable for the condition as approved by the manufacturer's qualified Fire Protection Engineer. Use of an engineered deviation shall not be permitted if a tested and rated firestop system exists for the condition.

5. Where Project conditions require modification of qualified testing and inspecting agency's illustration to suit a particular through-penetration or joint firestop condition, submit illustration drawing approved by firestopping manufacturer's fire protection engineer with all relevant information identified pertaining to modifications.

D. Samples: Submit for Engineer’s action. Label samples to indicate product, characteristics, and location in the Work. Samples will be reviewed for color and appearance only. Furnish sufficient samples to establish the full range of colors and textures for materials exposed in the finished work. Compliance with other requirements is the responsibility of the Contractor. Provide the following:

1. Firestopping Material: Each type, cured, 6 in. long.

2. Damming Materials: 6 in. sq. of each type.

3. Metal Accessories: One representative sample

E. Quality Control Submittals: Submit for Engineer’s information.

1. Test Reports

a. Submit certified copies of test reports (conclusions and summary only) from approved independent testing laboratories showing compliance with the Contract Documents and including current system number per UL Listing for each type of firestop and penetration to be utilized on the project.

2. Certifications: Submit the following:

a. Document Review: Before commencing work, submit a written statement signed by the Contractor and the Applicator certifying that the Contract Documents, shop drawings and product data have been reviewed with material manufacturers' qualified technical representatives and that they agree the selected materials are proper, compatible with contiguous materials and adequate for the application shown

b. Certificate(s) of Conformance: Submit "Certificate(s) of Conformance" from UL for each product/system showing that listed products/systems have been tested to the appropriate standards.

c. Applicator Statement: Statement from applicator of firestopping system(s) attesting to the fact that each system has been accepted by the New York City Building Department for each specific condition on Project and that materials were installed in accordance with the manufacturer’s installation instructions and details.

d. Installer’s Certification: Furnish evidence that the Installer is an approved firestop contractor, certified in accordance with FM 4991 requirements.

e. Manufacturer's Certification: Furnish certification signed by the primary manufacturer of the firestop materials, stipulating which firestop systems are proposed for use in the Work, and stating that the Installer is approved as an experienced applicator of said firestop systems.

f. System Test Reports: Furnish certified test reports from the testing agency performing the firestop system tests, indicating identification of the corresponding system design number, a test summary and a conclusion verifying compliance with specified requirements.

g. Engineered Deviations: Furnish certification from firestop systems manufacturer, identifying each condition for which there is no tested and rated firestop system in existence, and describing a suitable design for the condition as based on modification of a tested system and approved by the manufacturer's qualified Fire Protection Engineer. Engineered deviations will be reviewed in accordance with IFC recommended guidelines. Use of an engineered deviation from a manufacturer shall not be permitted if a tested and rated firestop system from another manufacturer exists for the condition.

h. NYC Building Department Acceptance: Submit a copy of the NYC Building Department acceptance sheet for each firestopping system submitted for each specific condition on Project.

F. Closeout Submittals: Submit for City of New York's documentation.

1. Warranty: Furnish specified warranty.

2. Record Documents: Furnish record drawings annotated with the changes made during installation of the Work so as to be a complete set of "as installed" plans. Use shop drawings as basis to show changes. Accurately depict the entire firestop system and surrounding construction.

1.5 QUALITY ASSURANCE

A. Contractor's Quality Control Responsibilities: Contractor is solely responsible for quality control of the Work.

B. Firestop Manufacturer: Do not use firestop material produced by any manufacturer who will not agree to send a direct employee as a qualified technical representative to the project site, during the initial installation and when requested, for the purpose of instructing appropriate installer personnel in proper selection and installation procedures and for rendering advice concerning the proper installation of materials. Manufacturer shall employ a professional Fire Protection Engineer with qualifications acceptable to the Society of Fire Protection Engineers (SFPE).

C. Firestop Systems: Provide only firestop systems which have been tested and listed as firestop systems to meet every condition in the Work. Do not provide materials or systems not part of a tested firestop system suitable for the

condition or not certified by manufacturer as an engineered deviation suitable for the condition as approved by manufacturer's qualified Fire Protection Engineer. Use of an engineered deviation from a manufacturer shall not be permitted if a tested and rated firestop system from another manufacturer exists for the condition.

D. Qualified Installer: The Installer shall be an approved firestop contractor, certified in accordance with FM 4991 requirements, trained and approved by the firestop system manufacturer in the use of the materials and equipment to be employed in the Work.

E. Single Responsibility: Contract the firestopping Work to a single firm so as to establish undivided responsibility of the firestop systems for the entire Work.

1. Contract the firestopping not later than contracts for any of the building services and wall systems, (including for Work such as ducts, piping, conduit, masonry, gypsum board, and exterior wall,) to allow time for coordination of firestopping with the other trades.

F. Regulatory Requirements: Comply with applicable requirements of the laws, codes, ordinances and regulations of Federal, State and Municipal authorities. Obtain necessary approvals from the NYC Building Department.

1. Comply with NYC Building Law, Reference Standard RS 5-19, "Fire Tests for Through-Penetration Fire Stops", including referenced provisions for ASTM E814. In addition, provide materials, accessories and application procedures which have been approved for use in the City of New York.

G. Field Samples: Provide a field sample for each type, condition, and application of firestopping in the building at final installation locations. Utilize the same materials and installation methods in the sample as required for the final Work. Schedule the installation with allowance for sufficient curing time so that the sample may be examined, and any necessary adjustments made, at least 1 week prior to date scheduled for commencing installation of the Work. When accepted, sample areas shall serve as the standard for materials, workmanship, and appearance for such Work throughout the project and shall remain a part of the final Work.

H. Pre-Installation Meetings: Prior to installation of the building services and walls, Contractor shall meet with the various trades for such Work and the firestopping Installer to review installation clearances, framing around openings, minimum spacing of penetrants, correct opening sizes for penetrant systems to be used, penetrant materials permitted, the maximum number of penetrants in each opening, and access at both sides of penetrations for installation of firestopping.

1.6 DELIVERY, STORAGE, AND HANDLING

A. General: Deliver and store materials in manufacturer's original packaging labeled to show name, brand, type, and grade. Store materials in protected dry location off ground in accordance with manufacturer's instructions. Do not open packaging nor remove labels until time for installation.

1.7 PROJECT / SITE CONDITIONS

A. Requirements: Do not proceed with the Work when project/site conditions are unfavorable, unless the Work will proceed in accordance with the manufacturer's requirements and instructions and any agreements or restrictions of the Pre- Construction Conference. Maintain adequate temperature and ventilation conditions to ensure proper application and curing of firestopping.

1.8 SEQUENCING

A. Coordination: Verify that construction and sizing of sleeves, openings, core-drilled holes, cut openings and penetrating items shall ensure that firestop systems can be installed according to specified requirements. Determine that installation of the penetrants shall not compromise the integrity of the elements being penetrated, that access and working clearances are adequate, and that the approved firestop systems can be properly installed. Coordinate the sequencing of Work to permit access at both sides of penetrations for installation of firestopping.

B. Inspection: Notify the inspecting agency at least 7 days in advance of firestopping system installations. Confirm the dates and times on days preceding each series of installations. Do not cover or conceal firestopping system installations behind other construction until after each installation has been examined by the inspecting agency, and building inspector if required by the NYC Building Department.

1.9 WARRANTY

A. General: Warranties specified in this Article shall not deprive the City of New York of other rights the City of New York may have under other provisions of the Contract Documents and are in addition to and run concurrent with other warranties made by the Contractor under requirements of the Contract Documents

1. Special Warranty: Submit two (2) year written warranty agreeing to repair or replace Work which has shown any evidence of deterioration, failed to provide an airtight seal, failed to provide a watertight seal where required, failed in adhesion or cohesion, or otherwise failed as a result of defects in materials or workmanship. Upon notification of such defects, within the warranty period, make necessary repairs or replacement at the convenience of the City of New York.

PART 2 - PRODUCTS

2.1 MATERIALS

A. Acceptable Manufacturers: Firestop systems produced by the following manufacturers will be acceptable, approved equal subject to review by Engineer. For each type of firestop system used throughout the Work, provide only firestop materials made or recommended by a single manufacturer.

1. Specified Technologies Inc.
2. Hilti Construction Chemicals Inc.
3. Isolatek International

4. Minnesota Mining & Mfg. Co. (3M)
5. Tremco Inc.
6. United States Gypsum Co.

B. Firestop Systems: Provide only firestop systems which have been tested and listed as firestop systems to meet every condition in the Work. Do not provide materials or systems not part of a tested firestop system suitable for the condition or not certified by manufacturer as an engineered deviation suitable for the condition as approved by manufacturer's qualified Fire Protection Engineer. Use of an engineered deviation from a manufacturer shall not be permitted if a tested and rated firestop system from another manufacturer exists for the condition.

C. Firestop systems indicated on the Drawings are based on design conditions. Contractor's selection of firestop systems shall be suitable for the field conditions, based on the actual size, location and materials used in the Work.

D. Auxiliary Materials: Provide the miscellaneous accessory items necessary to complete each firestopping condition, including, but not limited to, temporary or permanent damming, backing or forming materials, fillers, mechanical fastenings, support devices, collars, sleeves, cleaners, primers and other materials, as made or recommended by the firestop material manufacturer and tested with the rated firestop system.

PART 3 - EXECUTION

3.1 GENERAL

A. Manufacturer's Instructions: Prepare substrates and install the work of this section, including components, and accessories in accordance with the manufacturer's instructions, except where more stringent requirements are shown or specified, and where project conditions require extra precautions or provisions to ensure satisfactory performance of the work.

3.2 EXAMINATION

A. Verification of Conditions: Examine the areas to receive the Work and the conditions under which the Work would be performed. Remedy conditions detrimental to the proper and timely completion of the Work. Do not proceed until unsatisfactory conditions have been corrected.

B. Do not apply firestop material until the construction defining the opening and installation of all penetrants through the opening has been completed. Verify that pipe, conduit, cable, and other penetrants have been secured.

3.3 PREPARATION

A. Substrate Acceptability: Commencement of installation shall constitute acceptance of substrate conditions by the Installer.

B. Surface Preparation: Perform cleaning and surface preparation

immediately prior to installation of firestopping. Prepare the substrate surfaces for proper adhesion of firestop materials and for compatibility of materials to be in contact. Clean substrates to remove coatings or other substances which might interfere with bond of firestop materials. Remove materials and substances from openings which are not part of the tested firestop system, unless otherwise recommended by manufacturer. Provide masking materials or use other precautions to prevent spillage or migration of firestop material onto adjoining surfaces.

3.4 INSTALLATION

A. Firestopping Applications: Provide in accordance with the manufacturers' instructions and the accepted shop drawings. Apply materials to obtain complete filling to the correct depth and dimensions without gaps or voids. Remove excess material, except where overlapping onto adjoining construction is a normal part of the tested and recommended system. Provide firestopping for applications including, but not limited to, the following conditions.

1. Penetrations or empty openings for the passage of ducts, cable, cable trays, conduit, piping, electrical busways and raceways through fire-rated barriers such as ceilings, roofs, walls and partitions.
2. Joints or gaps within fire rated construction.
3. Expansion joints.
4. Gaps between the top of fire rated walls, ceilings, or roof assemblies.
5. Openings around structural members.
6. Perimeter fire barrier for gaps.

B. Engineered Deviations: Where field conditions deviate from tested system conditions or are not otherwise reflected on shop drawings and certified by manufacturer as an engineered deviation, consult with manufacturer's technical representative to determine the proper system, and submit the proposed design before proceeding.

C. Priming: Prime or seal substrates in accordance with the manufacturer's recommendations for proper adhesion in each application. Promptly remove any spillage and avoid migration of primer or surface sealer onto adjoining surfaces.

D. Damming: Provide leakproof damming or containment to seal openings and otherwise prevent flow or displacement of firestopping from the spaces to be filled. Provide only non-combustible damming where the damming cannot be removed after application of firestopping. Combustible damming may be used temporarily, but only if damming is completely removed as soon as the firestopping is cured and self- supporting.

E. Void Filler: Provide to seal gaps in noncombustible type damming materials and to seal around penetrants where the void filler is an integral part of the firestop system.

F. Bundled and Touching Penetrants: Where penetrants are bundled together or contact each other in passing through the same opening, sufficiently separate each penetrant and completely encapsulate with firestopping to make a smoketight and airtight installation.

G. Intumescent Materials at Fire Rated HVAC Duct Dampers: Do not use intumescent firestopping that could during intumescence cause stress or buckling of construction surrounding duct dampers and impair the damper operation.

3.5 FIELD QUALITY CONTROL

A. Manufacturer's Field Service: At the start of the installation, periodically as the Work progresses, and after completion, furnish the services of the firestop material manufacturers' technical representative at the job site as necessary to advise on every phase of the Work. As a minimum, furnish representative's attendance during the first day of installation for each major type of firestop material, and furnish technical assistance to the Installer as may be required.

B. Inspections:

1. Firestopping materials shall be inspected by the manufacturers' technical representative as required to assure proper mixing and application.

2. Prior to concealing and enclosing an area containing firestopping, Contractor shall notify the inspection agency and also arrange for inspections required by the NYC Building Department.

C. Field Identification of Firestop Systems: Provide an identification tag at the location of each firestop system with a permanent label or marking to indicate the name of the installer, the date of installation, the name of manufacturer and firestop system, the name of testing agency and tested firestop system identification, and the words **"Rated Through-Penetration Firestop System - Do Not Disturb"** or equal wording as approved by the NYC Building Department.

1. Identification Tags: Provide identification on melamine plastic or brass tags, either engraved on red plastic tags with white characters in one or both faces, or stamped on brass tags with clear protective coating with a self-adhesive that is suitable for the substrate and causes partial tag destruction if removal is attempted. Secure tag to a penetrant item with a snug compression-fit plastic or brass wire tie in visible location suitable for inspection within 6 in. of the firestop system, and not more than 50 ft. intervals along the system length.

3.6 CITY OF NEW YORK'S MONITORING ACTIVITIES

A. City of New York's Inspection Agency: An independent inspection agency, engaged at the City of New York's expense, will perform the following activities to monitor the Contractor's Quality Control Program. The monitoring activities do not relieve the Contractor of sole responsibility for maintaining the Quality Control Program.

1. Inspections of the firestopping work shall comply with New York City “Special Inspections” statutory requirements for the requirements of the component materials and installation.

B. Inspections: Provide in accordance with ASTM E2174 requirements and perform inspections as the work progresses. Verify that firestopping systems have been constructed in compliance with the submitted designs for fire rating required by the Contract Documents and are acceptable to the Engineer.

1. Visually inspect firestop materials and substrates before installation to ascertain that preparation has been performed in accordance with the Contract Documents.

2. Inspect the completed Work, including removal of damming materials, if used, to ensure an adequate and complete fire and smoke seal.

3. Perform final inspection after other trades have completed Work in contact with firestopping material, but before the firestop system is covered.

3.7 ADJUSTING

A. Repair: Repair damaged firestopping or remove and replace if damaged beyond successful repair. Comply with manufacturer’s recommendations for repair and replacement.

3.8 CLEANING

A. Upon completion of the Work, remove unused materials, debris, containers and equipment from the project site.

3.9 PROTECTION

A. Protect the Work during the construction period so that it will be without any indication of use or damage at the time of acceptance.

END OF SECTION

SECTION 07 92 00 – JOINT SEALANTS

PART 1 - GENERAL

1.1 SUMMARY

A. General: Provide joint sealants in accordance with requirements of the Contract Documents.

B. Related Work Specified Elsewhere

1. Masonry control and expansion joint fillers and gaskets for masonry is specified in Section 04 20 00 “Unit Masonry”

2. Sealing penetrations in fire rated construction is specified in Section 07 84 00 “Firestopping”.

3. Glazing sealants are specified in Section 08 80 00 “Glazing”.

4. Sealing of electrical and mechanical work is specified under applicable Mechanical and Electrical specification sections.

1.2 REFERENCES

A. General: Comply with the applicable provisions of the referenced standards except as modified by governing codes and the Contract Documents. Where a recommendation or suggestion occurs in the referenced standards, such recommendation or suggestion shall be considered mandatory. In the event of conflict between referenced standards, this specification or within themselves, the more stringent standard or requirement shall govern.

B. American Society for Testing and Materials (ASTM):

1. ASTM C1193 "Standard Guide for Use of Joint Sealants”.

2. ASTM C1401 “Standard Guide for Structural Sealant Glazing”.

3. ASTM C1330 “Standard Specification for Cylindrical Sealant Backing for Use with Cold Liquid- Applied Sealants”.

4. ASTM C1087 “Test Method for Determining Compatibility of Liquid-Applied Sealants with Accessories Used in Structural Glazing Systems”.

ASTM C1247 “Standard Test Method for Durability of Sealants Exposed to Continuous Immersions in Liquids”.

1.3 SYSTEM DESCRIPTION

A. Design Requirements

1. Exterior Joint Sealants: Provide exterior elastomeric joint sealants that establish and maintain watertight and airtight continuous joint seals without staining or deteriorating joint substrates.

2. Interior Joint Sealants: Provide joint sealants for interior applications that establish and maintain airtight and water-resistant continuous

joint seals without staining or deteriorating joint substrates.

3. Compatibility: Provide only the sealants and joint fillers which are explicitly recommended by the manufacturer for the application, and which have been determined by tests to be totally compatible with the joint surfaces and each other, as stated in the manufacturer's published data or certified by the manufacturer for each application.

4. Staining: Provide sealant systems which shall not cause or contribute to staining of substrate surfaces. Manufacturer shall perform staining tests of sealant systems in accordance with ASTM C1248 for each joint substrate condition in the Work

5. Suitability for Immersion in Liquids. Where sealants are indicated for joints that will be continuously immersed in liquids, provide products that have undergone testing according to ASTM C1247. Liquid used for testing sealants is deionized water, unless otherwise indicated.

1.4 SUBMITTALS

A. Product Data: Submit for Engineer's action. Submit manufacturer's literature, specifications and installation instructions describing the general properties of each material and accessory to be used in the Work.

1. Statement that each product to be furnished is recommended for the application shown.

2. Complete instructions for handling, storage, mixing, priming, installation, curing and protection of each type of sealant.

3. Provide independent validation from the "Sealant Waterproofing and Restoration Institute" that the manufacturers of the weatherproofing sealants meet their claimed movement capability.

B. Samples: Submit for Engineer's action. Label samples to indicate product, characteristics, and location in the Work. Samples will be reviewed for color and appearance only. Furnish sufficient samples to establish the full range of colors and textures for materials exposed in the finished work. Compliance with other requirements is the responsibility of the Contractor. Submit the following:

1. Sealant Samples: 12 in. long and installed between samples of the materials to be sealed for the Project complete with backer rods and fillers.

C. Quality Control Submittals: Submit the following for Engineer's information:

1. Test Reports

a. Preconstruction Compatibility And Adhesion Testing: Submit results of preconstruction compatibility and adhesion testing as specified herein, indicating which joint sealants and joint preparation methods resulted in optimum adhesion to joint substrates based on preconstruction testing including which substrates require priming and recommended primer type(s).

b. Preconstruction Stain Resistance Testing: Submit results of preconstruction stain resistance testing as specified herein,

indicating which joint sealants and substrates combinations resulted in staining or other detrimental conditions. Along with test results, submit sealant manufacturer's letter stating agreement to provide warranty against staining based on ASTM C1248.

c. Preconstruction Field Testing: Submit results and evaluations of preconstruction field testing as specified herein.

2. Certificates

a. Document Review: Before commencing work, submit a written statement signed by the Contractor and the Applicator certifying that the Contract Documents, shop drawings and product data have been reviewed with material manufacturers' qualified technical representatives and that they agree the selected materials are proper, compatible with contiguous materials and adequate for the application shown.

b. Certification (in the form of standard data sheet or letter) that each type of compound and sealant to be furnished complies with these Specifications.

c. Certification that each type of sealant joint filler and sealant backer rod has been tested for compatibility with selected sealant in accordance with ASTM C1087 and is recommended by the sealant manufacturer for the intended use.

D. Closeout Submittals: Submit for documentation.

1. Warranties: Special warranties as specified.

2. Reinstallation Instructions: Submit a set of reinstallation instructions for each sealant type provided in a form suitable for the City's maintenance staff to be able to repair and replace failed sealants within the scope of building maintenance.

1.5 QUALITY ASSURANCE

A. Installer/Applicator: The sealant work shall be performed by a firm having five (5) years experience in the installation of specified materials on comparable projects.

B. Manufacturer's Representative: Do not use joint sealants until the manufacturer has a qualified representative at the project site at the start of the work to review conditions of application, verify joint width conditions and to ensure proper installation of his materials.

C. Regulatory Requirements: Comply with applicable requirements of the laws, codes, ordinances and regulations of Federal, State and Municipal authorities. Obtain necessary approvals from the NYC Building Department.

D. Mock-Ups: Provide joint sealants, fillers, gaskets, related accessories and miscellaneous materials for testing and visual mock-ups, as specified under other Sections, representing the materials and installation techniques which will be usedin the final Work.

E. Field Samples: Prior to the Pre-Installation Meeting, provide a field sample for each type of joint sealer system in the building at areas to be designated

by the Engineer. Samples shall represent the primary types of materials, substrate surfaces, joint size, exposure, and other conditions to be encountered in the Work. Utilize the same materials and installation methods in the sample as required for the final Work. Schedule the installation with allowance for sufficient curing time so that the sample may be examined, and any necessary adjustments made, at least 1 week prior to date scheduled for commencing installation of the Work. When accepted, sample areas shall serve as the standard for materials, workmanship, and appearance for such Work throughout the project.

1. Examination of Field Samples: As part of the Pre-Installation Meeting, visually examine the samples for staining, dirt pickup, shrinkage, color, general workmanship and appearance. Cut and pull the sealant from each sample joint, and examine for internal bubbles or voids, adhesion, and general compatibility with substrate

2. Field work shall conform to the parameters set in the mockup and at the preinstallation meeting with regards to acceptable joint design, surface preparation, appearance, color, backer rod selection, adhesion and compatibility.

F. Testing

1. Preconstruction Compatibility and Adhesion Testing: Prior to testing of mock- ups and construction, submit samples of materials that will contact or affect joint sealants to sealant manufacturers for compatibility and adhesion testing, as indicated below:

   a. Perform sealant adhesion evaluation at the earliest possible time after award of the Contract.

   b. The sealant manufacturer shall perform adhesion evaluation tests in accordance with ASTM C794 using the sealant and production run samples of the finished substrates which are to be used in the final Work.

   c. Use test methods standard with manufacturer to determine if priming and other specific joint preparation techniques are required to obtain rapid, optimum adhesion of joint sealants to joint substrates. Perform tests under laboratory conditions of 72 deg. F. temperature and 50% relative humidity. Manufacturer(s) of sealant(s) shall submit written recommendations when installations involve adverse temperature or humidity conditions.

   d. Furnish to the sealant manufacturer the finished substrate samples of such size and quantity as he requires for compatibility and adhesion evaluation. The substrate metal samples shall be of the alloy and with the temper, surface treatment and preparation, primer and finish in each specified color, as are to be used in the test mock-ups and in the final Work

   e. Schedule sufficient time for testing and analysis of results to

prevent delay in the progress of the Work.

f. Investigate materials failing compatibility or adhesion tests and obtain sealant manufacturer's written recommendations for corrective measures, including use of specially formulated primers.

g. If the materials used fail to meet the sealant manufacturer's requirements for structural glazing, furnish additional samples with such modifications as may be necessary to meet the sealant manufacturer's requirements and the requirements of /the Contract documents.

h. Testing will not be required when sealant manufacturer is able to submit joint preparation data required above which is acceptable to Engineer and is based on previous testing of current sealant products for adhesion to, and compatibility with, joint substrates and other materials matching those submitted.

2. Preconstruction Stain Resistance Testing: Prior to testing of mock-ups and construction, submit fully identified samples of materials that will contact or affect joint sealants to sealant manufacturers, in sizes and quantities as required, for stain testing, as indicated below:

a. Manufacturer shall perform staining tests of sealant systems for exterior applications in accordance with ASTM C1248 method for each joint substrate condition in the Work Submit quantities of each type of contiguous joint substrate material as required by referenced standard and in sizes as required by the sealant manufacturer for testing.

b. Schedule sufficient time for testing and analysis of results to prevent delay in the progress of the Work.

3. Preconstruction Field Testing: Prior to installation of joint sealants, field-test their adhesion to joint substrates as follows:

a. Locate test joints where indicated or, if not indicated, as directed by Engineer.

b. Conduct field tests for each type of exterior elastomeric sealant and joint substrate application.

c. Arrange for tests to take place with the Contactor, the Engineer and the sealant manufacturer's technical representative present.

d. Test Method: Test joint sealants according to “Method A, Field-Applied Sealant Joint Hand Pull Tab”, in Appendix X1 in ASTM C1193 “Standard Guide for Use of Joint Sealants” or Method A, Tail Procedure in ASTM C1521 "Standard Practice for Evaluating Adhesion of Installed Weatherproofing Joints". For joints with dissimilar substrates, verify adhesion to each substrate separately; extend cut along one side, verifying adhesion to opposite side. Repeat procedure for opposite side

e. Report whether or not sealant in joint connected to pulled-out portion failed to adhere to joint substrates or tore cohesively. Include data on pull distance used to test each type of product and joint substrate.

f. Evaluation of Field Test Results: Joint sealants not evidencing adhesive failure from testing, in absence of other indications of noncompliance with requirements, will be considered satisfactory. Do not use joint sealants which fail to meet manufacturers guidelines for adhesion to joint substrates during testing.

G. Pre-Installation Meeting: Prior to the installation of sealant, meet at the Project site to review the material selections, joint preparations, installation procedures and coordination with other trades. Examine sample installations which have been prepared and determine (and record) whether everyone present is in agreement that the proposed installations are likely to perform as required

1.6 DELIVERY, STORAGE AND HANDLING

A. Delivery: Deliver materials to Project site in manufacturer's unopened containers, with manufacturer's name, brand, hardness, type, class, grade, and color fully indicated thereon. In addition, provide manufacturer’s expiration date on sealant containers and/or include with shipping and installation packaging. Store in accordance with manufacturer's instructions.

1.7 PROJECT/SITE CONDITIONS

A. Temperature Limitations: Do not install materials when the temperature is below 40 deg. F., unless the manufacturer specifically recommends application of his materials at lower temperatures. If job progress or any other condition requires installations when temperatures are below 40 deg. F. (or below the minimum installation temperature recommended by the manufacturer) consult the manufacturer's representative and establish the minimum provisions required to ensure satisfactory work. Record in writing to the manufacturer, with copy to the Engineer, the conditions under which such installation must proceed and the provisions made to ensure satisfactory work.

B. Weather Limitations: Do not proceed with installation of bulk compounds during inclement weather unless all requirements and manufacturer's instructions can be complied with and unless the work can proceed in accordance with the agreements of the pre-installation meeting. Do not proceed with the installation of elastomeric joint sealants under extreme temperature conditions which would cause joint openings to be at either maximum or minimum width or when such extreme temperatures or heavy wind loads are forecast during the period required for initial or nominal cure of elastomeric joint sealants. Whenever possible, schedule the installation and cure of elastomeric joint sealants during periods of mean temperatures (nominal joint width shown) so that subsequent stresses upon the cured joint sealants will be minimized.

1.8 WARRANTIES

A. General: Warranties specified in this Article shall not deprive the City of New York of other rights the City of New York may have under other provisions of the Contract Documents and are in addition to and run concurrent with other warranties made by the Contractor under requirements of the Contract Documents

1. Special Warranty: Submit a written manufacturer’s warranty agreeing to repair or replace sealant compounds which have failed to provide airtight and watertight joints for any reason, or which appear to have failed in adhesion, cohesion, abrasion-resistance, migration-resistance, stain-resistance, general durability or any other form of apparent deterioration (excluding inherent qualities and limitations clearly specified in the manufacturer's data which was submitted). Period of warranty shall be two (2) years. Comply with these Specifications for repair or replacement of work.

2. Special Warranty: Submit a written manufacturer’s warranty agreeing to repair or replace silicone sealant compounds which have failed to provide airtight and watertight joints for any reason, or which appear to have failed in adhesion, cohesion, abrasion-resistance, migration-resistance, stain-resistance, general durability or any other form of apparent deterioration (excluding inherent qualities and limitations clearly specified in the manufacturer's data which was submitted). Period of warranty shall be twenty (20) years. Comply with these Specifications for repair or replacement of work.

3. Special Warranty: Submit a written manufacturer’s warranty agreeing to repair or replace sealant compounds which have stained contiguous materials (excluding inherent qualities and limitations clearly specified in the manufacturer's data which was submitted). Period of warranty shall be twenty (20) years. Comply with these Specifications for repair or replacement of work.

PART 2 - PRODUCTS

2.1 MATERIALS, BULK COMPOUNDS

A. General: Provide joint sealants, joint fillers and other related materials that are compatible with one another and with joint substrates under conditions of service and application, as demonstrated by sealant manufacturer based on testing and field experience. Use non-sag compounds except as shown or specified.

B. Elastomeric Compounds

1. Silicone Rubber (Building Sealant): ASTM C920, class and use as best suited for the intended purpose; Provide one of the following:

a. "795 Building Sealant" or "790 Silicone Building Sealant"(Dow Corning Corp.).

b. "SilPruf SCS2000" (Momentive Performance Materials Inc.).

c. "Sikasil WS-305 Building Sealant" (Sika Corp.).

d. Or approved equal.

2. Silicone Rubber Sealant for stone and pre-cast concrete work (non-staining): ASTM C920, Type S, Grade NS, neutral cure, Class and Use as best suited for the intended purpose; Provide one of the following:

   a. "756 SMS Building Sealant" (Dow Corning Corp.).

   b. "SilPruf NB SCS9000 " (Momentive Performance Materials Inc.).

   c. “Non-Staining Silicone Rubber Sealant” (Sika Corp).

   d. Or approved equal.

3. Silicone Rubber (Structural Sealant): Complies with ASTM C920 and ASTM C1184 requirements, is compatible with system components with which it comes in contact, and is specifically formulated and tested for use as a structural sealant; class and use as best suited for the intended purpose; Provide one of the following:

   a. "995 Silicone Building Sealant" (Dow Corning Corp.) for field use and "983 or 995 Silicone Building Sealant"(Dow Corning Corp.) for use in the shop.

   b. "Ultraglaze SSG4000 or Ultraglaze SSG4000AC Silicone Structural Glazing Sealant" (Momentive Performance Materials Inc.); for field use and "Ultraglaze SSG4400 Silicone Structural Glazing Sealant" (Momentive Performance Materials Inc.) for use in the shop.

   c. "Sikasil SG-18 Building Sealant" (Sika Corp.) for field use and "Sikasil SG-18 Building Sealant" or SG-500 Silicone Building Sealant"(Sika Corp.) for use in the shop.

   d. Or approved equal.

4. Multi-Component Polyurethane: ASTM C920, Type M, Grade NS, Class and Use as best suited for the intended purpose; Products meeting these requirements are: Provide one of the following:

   a. "Dymeric 240" (Tremco).

   b. "Dynatrol II (Pecora Corp.).

   c. “PSI-270” (Polymeric Systems, Inc.).

   d. Or approved equal.

5. Multi-component, Pourable, Self-leveling Polyurethane: ASTM C920, Type M, Grade P, high traffic class and high traffic use; Products meeting these requirements are: Provide one of the following:

   a. "Sikaflex-2C SL" (Sika Corporation).

   b. "NR-200 Urexpan" (Pecora Corporation).

   c. "THC 900/901" (Tremco).

   d. Or approved equal.

6. Silicone Rubber Concrete and Precast Concrete Sealant: Low modulus, non- sag one component silicone sealant; ASTM C920, Type S, Grade NS, Class 100/50 and Use T, A, M, and O. Provide one the following:

   a. "NS Parking Structure Sealant" Gray color (Dow Corning Corp.)

   b. “Bondaflex Sil 728 NS” (May National Associates, Inc.).

   c. “Spectrem 800” (Tremco Incorporated).

   d. Or approved equal.

7. Immersible Multicomponent, Nonsag, Traffic-Grade, Urethane Joint Sealant:

   ASTM C920, Type M, Grade NS, Class 25, for Uses T and I

   a. “Bondaflex PUR 2 NS” (May National Associates, Inc.).

   b. “Dynatred” (Pecora Corporation).

   c. “Vulkem 227” (Tremco Incorporated).

   d. Or approved equal.

C. Non-Elastomeric Mildew Resistant Compounds

1. Silicone Sanitary Rubber: ASTM C920, Type S, Grade NS; Provide white color unless otherwise shown or specified. Provide one of the following:

   a. "Silicone Sanitary SCS 1700 Sealant" (Momentive Performance Materials Inc.).

   b. "786 Mildew Resistant Silicone Sealant" (Dow Corning Corp.).

   c. "898 Sanitary Silicone Sealant" (Pecora Corp.).

   d. "Tremsil 200 Sanitary" (Tremco).

   e. Or approved equal.

D. Non-Elastomeric Compounds

1. Acrylic Latex (Paint Grade): ASTM C834 Non-sag emulsion sealant, suitable for ±7.5 percent joint movement; Provide one of the following:

   a. "AC-20" (Pecora Corp.).

   b. "Tremflex 834" (Tremco).

   c. "Sonolac" (BASF Building Systems) .

   d. “Bondaflex 600” **(**May National Associates, Inc.).

   e. Or approved equal.

E. Color of Sealant: For concealed joints provide the manufacturer's standard color which has the best overall performance qualities for the application shown. For exposed joints the Engineer will select colors from the manufacturer's standard colors unless special colors are shown or specified.

2.2 JOINT FILLER MATERIALS

A. Compressible Rod (Backer Rod): ASTM C1330; types as recommended by sealant manufacturer. Provide non-gassing rod fillers, types as shown, or as required for proper performance of the sealant in the specific joint, which is compatible with sealant, as recommended by sealant manufacturer. Sealant compatibility shall be confirmed by the sealant manufacturer. Compatibility characteristics of sealants in contact with sealant backings shall be determined by ASTM Test Method C1087.

B. Filler for Concrete Paving: ASTM D1751, asphalt-saturated cellulosic fiber.

C. Filler For Concrete Pedestrian Walkways**:** Provide non water absorbing type filler which has been tested for compatibility with the intended sealants. Fillers may be manufactured from polypropylene, polyethylene or polystyrene and shall be used for the purpose of resisting deflection of the joint under load and long term compatibility. Do not use typically asphaltic based or open cell polyurethane foam type materials for these type installations.

D. Shape And Size: Select shape and size of joint filler in consultation with the manufacturer for proper performance in the specific condition of use in each case.

2.3 AUXILIARY MATERIALS

A. Joint Cleaner: Provide nonstaining, chemical cleaners of type which are recommended by and acceptable to manufacturers of joint sealants and sealant backing materials, which are not harmful to substrates and adjacent nonporous materials, and which do not leave oily residues or otherwise have a detrimental effect on sealant adhesion or in-service performance.

B. Joint Primer and Sealer: Provide non-staining compounds recommended by the manufacturer of the sealant for the specific joint surface and condition.

C. Bond-Breaker Tape: Polyethylene tape as recommended by sealant manufacturer for preventing sealant from adhering to rigid, inflexible joint filler materials or joint surfaces at back of joint where such adhesion would result in sealant failure. Provide self-adhesive tape where applicable.

D. Masking Tape: Provide nonstaining, nonabsorbent type compatible with joint sealants and to surfaces adjacent to joints.

PART 3 - EXECUTION

3.1 GENERAL

A. Manufacturer's Instructions: Prepare substrates, apply primers and install (erect, apply) the work of this Section, including (equipment, components, and) accessories in accordance with the manufacturer's instructions, except where more stringent requirements are shown or specified, and where project conditions require extra precautions or provisions to ensure satisfactory performance of the Work.

3.2 EXAMINATION

A. Verification of Conditions: Examine the areas to receive the Work and the

conditions under which the Work would be performed. Contractor shall remedy conditions detrimental to the proper and timely completion of the Work. Do not proceed until unsatisfactory conditions have been corrected.

B. Joint Widths: Do not proceed with sealant installation where joint widths are less than allowed for application intended. In addition, examine the substrates to determine if they are strong enough to withstand the forces which will be induced by the joint sealants. Repair or strengthen substrates as required before proceeding with the work.

3.3 PREPARATION

A. Substrate Acceptability: Commencement of installation shall constitute acceptance of substrate conditions by the Installer.

B. Surface Cleaning of Joints: Clean out joints immediately before installing joint sealers to comply with the following requirements:

1. Remove foreign material from joint substrates which could interfere with adhesion of joint sealer, including dust; paints, (except for permanent, protective coatings tested and approved for sealant adhesion and compatibility), old joint sealers, oil, grease, waterproofing, water repellants, water; surface dirt, and frost.

2. Clean concrete, masonry, unglazed surfaces of ceramic tile and similar porous joint substrate surfaces, by brushing, grinding, blast cleaning, mechanical abrading, or a combination of these methods to produce a clean, sound substrate capable of developing optimum bond with joint sealers. Remove loose particles remaining from above cleaning operations by vacuuming or blowing out joints with oil-free compressed air.

3. Remove laitance and form release agents from concrete.

4. Clean metal, glass, porcelain enamel, glazed surfaces of ceramic tile; and other nonporous surfaces by chemical cleaners or other means which are not harmful to substrates or leave residues capable of interfering with adhesion of joint sealers.

C. Joint Priming: Prime or seal substrates, except where written reports of tests conducted by an independent testing agency have been submitted which demonstrate that primer or sealer is not required for the conditions of use and the substrates involved. Apply primer to comply with recommended application requirements. Confine primers to areas of joint sealer bond, do not allow spillage or migration onto adjoining surfaces.

D. Previously Treated Joints: Do not apply elastomeric compounds to joint surfaces previously treated with paint, lacquer, sealer, curing compound, water repellent or other coatings unless a laboratory test for durability of bond has been successfully completed in accordance with ASTM C794.

E. Masking Tape: Use masking tape where required to prevent contact of sealant with adjoining surfaces which otherwise would be permanently stained or damaged by such contact or by cleaning methods required to remove sealant smears. Remove tape immediately after tooling without disturbing sealant.

3.4 INSTALLATION

A. Installation of Sealant Backings: Install sealant backings to comply with the following requirements:

1. Where joint filler is used as backup for bulk compounds, install filler continuously to depth and shape required for proper application and performance of products. Install joint fillers to provide support of joint sealants during application and at position required to produce the cross-sectional shapes and depths of installed joint sealants relative to joint widths which allow optimum sealant movement capability. Provide watertight and airtight corners and joints in a manner recommended by the manufacturer. Do not leave gaps between ends of joint fillers and do not stretch, twist, puncture, or tear joint fillers. Remove absorbent joint fillers which have become wet prior to sealant application and replace with dry material.

2. Install bond breaker tape between joint sealants and joint fillers, compression seals, or back of joints where adhesion of sealant to surfaces at back of joints would result in sealant failure.

B. Elastomeric Sealant Installation Standard: Comply with ASTM C1193 for installation of joint sealants as applicable to materials, applications and conditions indicated.

1. Apply compounds in continuous beads without open joints, voids or air pockets so as to provide a watertight and airtight seal for the entire joint length and to allow optimum sealant movement capability.

2. Apply compounds to the depth and width ratio recommended.

C. Tooling of Joints: Immediately after sealant application and prior to time skinning or curing begins, tool joint sealants to form smooth, uniform beads of configuration indicated, to eliminate air pockets, and to ensure contact and adhesion of sealant with sides of joint. Remove excess joint sealants from surfaces adjacent to joint. Do not use tooling agents which discolor joint sealants or adjacent surfaces or are not approved. Tool exposed surfaces of compounds to the profile shown or if none is shown, tool slightly concave to match configuration per Figures 1, 4 and 8 in ASTM C1193, unless otherwise indicated.

D. Horizontal Joints, General: Joints Not Subject to Traffic or Other Abrasion: Apply sealant to a depth equal to 50% of the joint width, but not less than 1/4 in. and not more than 1/2 in. against rough surfaces or in joints of uneven widths avoid the appearance of excess sealant by locating the sealant well back into joint wherever possible. Tool exposed surfaces slightly concave, except provide a slight wash on horizontal joints where horizontal and vertical surfaces meet.

E. Sidewalk, Pavement, and Similar Horizontal Joints: Apply sealant to a depth equal to 75% of the joint width, but not less than 3/8 in. and not more than 3/4 in. Pour self- leveling sealant in horizontal joints to a level 1/16 in. below the adjoining surfaces, unless otherwise shown or recommended by the manufacturer.

3.5 FIELD QUALITY CONTROL

A. Contractor's Quality Control Responsibilities: Contractor is solely responsible for quality control of the Work.

B. Field-Adhesion Testing: During exterior joint sealant installation, field test sealant adhesion to joint substrates as follows:

1. Extent of Testing: Test completed exterior elastomeric sealant joints as follows:

a. Perform 2 tests for the first 1000 ft. of joint length for each type of exterior elastomeric sealant and joint substrate.

b. Perform 1 test for each 1000 ft. of joint length thereafter.

2. Test Method: Test joint sealants according to "Method A, Field-Applied Sealant Joint Hand Pull Tab" in Appendix X1 in ASTM C1193 and ASTM C1521. For joints with dissimilar substrates, verify adhesion to each substrate separately; do this by extending cut along one side, verifying adhesion to opposite side. Repeat procedure for opposite side.

3. Inspect joints for complete fill, for absence of voids, and for joint configuration complying with specified requirements. Record results in a field-adhesion- test log.

4. Inspect tested joints and report on the following:

a. Whether sealants in joints connected to pulled-out portion failed to adhere to joint substrates or tore cohesively. Include data on pull distance used to test each type of product and joint substrate. Compare these results to determine if adhesion passes field-adhesion hand-pull test criteria.

b. Whether sealants filled joint cavities and are free of voids.

c. Whether sealant dimensions and configurations comply with specified requirements.

5. Record test results in a field-adhesion-test log. Include dates when sealants were installed, names of persons who installed sealants, test dates, test locations, whether joints were primed, adhesion results and percent elongations, sealant fill, sealant configuration, and sealant dimensions.

6. Repair sealants pulled from test area by applying new sealants following same procedures used originally to seal joints. Ensure that original sealant surfaces are clean and that new sealant contacts original sealant.

7. Evaluation of Field Test Results: Sealants not evidencing adhesive failure from testing or noncompliance with other indicated requirements will be considered satisfactory. Remove sealants that fail to adhere to joint substrates during testing or to comply with other requirements. Retest failed applications until test results prove sealants comply with indicated requirements.

C. Waterproof Test: After curing exterior compounds, test joints for leaks by applying a stream of water perpendicularly from a 3/4 in. dia. hose equipped

with a control valve, pressure gage, and 1/2 in. inside dia. brass nozzle. Adjust the water flow to 30 psi at the nozzle inlet, and spray the water perpendicular to the joint at a distance 12 in. from the surface. Slowly move the nozzle back and forth for 5 minutes along a 5 ft. segment of joint. Starting from the lowest point and working upward, repeat the process on successive segments until every designated location has been tested. Test the sealed joint system of not less than 25% of the construction components. Test the sealed joint system comprised of the actual construction components. Conduct tests in the presence of the Engineer's representative who will determine the actual percentage of joints to be tested and the period of waterflow exposure, based upon any evidence of leakage. Repair leaks or other defects and retest as directed. Repair or replace other work damaged by such leaks.

3.6 ADJUSTING

A. Cleaning: Clean off excess joint sealants or sealant smears adjacent to joints as work progresses by methods and with approved cleaning materials.

3.7 PROTECTION

A. Protection: Protect joint sealants and related accessories during and after curing period from contact with contaminating substances or from damage resulting from construction operations or other causes so that they are without deterioration or damage at time of Substantial Completion. If, despite such protection, damage or deterioration occurs, cut out and remove damaged or deteriorated joint sealers immediately and reseal joints with new materials to produce joint sealer installations with repaired areas indistinguishable from original work.

B. Coatings: Do not apply paint or other coatings near joint surfaces until after sealants have been installed and are nominally cured, so that adhesion will not be impaired by migration of such substances onto the joint surfaces.

END OF SECTION

SECTION 08 31 00 – ACCESS DOORS AND PANELS

PART 1 - GENERAL

1.1 SUMMARY

A. General: Provide access doors and panels for concealed equipment requiring access in accordance with requirements of the Contract Documents.

B. Related Work Specified Elsewhere

1. Masonry construction is specified in Section 04 20 00 "Unit Masonry".
2. Finishes scheduled for installation in recessed pan-type access doors is specified in various Division 9 specification sections.
3. Finish painting of factory prime painted access doors and frames is specified in Section 09 90 00 "Paints and Coatings".
4. Valves, gauges, alarm devises, fire dampers, fire and smoke dampers, automatic and balancing dampers, junction boxes, ballasts, pull boxes, control panels, devices, and other concealed equipment requiring access are specified in applicable Division 21, 22, 23, 26 Specifications sections.

1.2 REFERENCES

A. General: Comply with the applicable provisions of the referenced standards except as modified by governing codes and the Contract Documents. Where a recommendation or suggestion occurs in the referenced standards, such recommendation or suggestion shall be considered mandatory. In the event of conflict between referenced standards, this specification or within themselves, the more stringent standard or requirement shall govern.

1. National Association of Architectural Metal Manufacturers (NAAMM): NAAMM "Metal Finishes Manual".
2. American Welding Society (AWS)
    a. AWS D1.1 "Structural Welding Code - Steel".
    b. AWS D1.2 "Structural Welding Code - Aluminum".
    c. AWS D1.3 "Structural Welding Code - Sheet Steel".
3. Industrial Fasteners Institute (IFI): "Fastener Standards Book."
4. National Fire Protection Association (NFPA): NFPA 80, “Standard for Fire Doors and Windows”.

1.3 SUBMITTALS

A. Product Data: Submit for Engineer’s action. Submit manufacturer’s literature, specifications and installation instructions describing the general properties of each material and accessory to be used in the Work for each type of access door and panel assembly, including instructions, and directions for installation of anchorage devices. Include maintenance instructions for doors with exposed factory finishes.

B. Shop Drawings: Submit for Engineer’s action. Submit shop drawings for the fabrication and installation of the Work including details of each frame type, elevations of door design types, anchorage and accessory items. Prepare details at not less than 3 in. = 1 ft. minimum scale.

1. Coordination Drawings: Reflected ceiling plans drawn to scale and coordinating penetrations and ceiling-mounted items with concealed framing, suspension systems, piping, ductwork, and other construction. Show the following:

a. Method of attaching door frames to surrounding construction.

b. Ceiling-mounted items including access doors and frames, lighting fixtures, diffusers, grilles, speakers, and special trim.

C. Samples: Submit samples for Engineer’s action. Label samples to indicate product, characteristics, and location in the Work. Samples will be reviewed for color and appearance only. Furnish sufficient samples to establish the full range of colors and textures for materials exposed in the finished work. Compliance with other requirements is the responsibility of the Contractor. Provide sample for each access door face material, at least 3 in. x 5 in. in size, in specified finish.

D. Access Door Schedule: Submit, for Engineer’s information, complete access door and panel schedule, including types, ratings, general locations, sizes, wall and ceiling construction details, finishes, latching or locking provisions, and other data pertinent to installation.

E. Quality Control Submittals: Submit for Engineer’s information.

1. Certificates

a. Document Review: Before commencing work, submit a written statement signed by the Contractor and the Applicator certifying that the Contract Documents, shop drawings and product data have been reviewed with material manufacturers' qualified technical representatives and that they agree the selected materials are proper, compatible with contiguous materials and adequate for the application shown.

b. Fire Rated Floor Access Door Test Certification: Submit, for Engineer’s information, certification attesting to the fact that fire rated floor access doors are tested in accordance with ASTM E119, NFPA 252, UL 10B or UL263 and are UL Listed for the specified rating and when installed and in the closed position the temperature on the unexposed surface of the door assembly shall not exceed 325 deg. F. above ambient for the duration of the tested period.

F. Closeout Submittals: Submit, for City of New York’s documentation.

1. Warranties: Special warranties as specified.

2. Maintenance Manuals: Two (2) copies of bound maintenance manuals, describing the materials, and procedures for cleaning and maintaining each type of access door. Include manufacturer's data describing the materials and finishes used in the work.

1.4 QUALITY ASSURANCE

A. Qualified Installer: The entity performing the work of this section must, within the last five (5) consecutive years prior to the bid opening have successfully completed in a timely fashion at least three (3) projects similar in scope, size and type to the required work

B. Manufacturer Qualifications: The fabricator/manufacturer shall must, for the past five (5) years, have been regularly engaged in the manufacture of material or equipment similar in type to that required for this Project. Such material or equipment provided by the manufacturer must have been in satisfactory service for not less than five (5) years.

1. Single-Source Responsibility: Obtain each type of access door for the entire project through one source from a single manufacturer.

2. Size Variations: Obtain Engineer's acceptance of manufacturer's standard size units, which may vary slightly from sizes indicated.

C. Verification: Obtain specific locations and sizes for required access doors and panels from trades requiring access to concealed equipment, and indicate on access door schedule submittal.

D. Requirements of Regulatory Agencies: Comply with applicable requirements of the laws, codes, ordinances and regulations of Federal, State and Municipal authorities. Obtain necessary approvals from the NYC Building Department.

1. Fire-Resistance Ratings: Wherever a fire-resistance rating is shown for construction into which access doors and panels are to be installed, provide an access door assembly (door, frame, hinge, and lock or latch) of type and manufacturer listed by Underwriter's Laboratories, "Classified Building Materials Index". Provide access doors and panels, UL rated 1-1/2 hour for 2 hour partition, Class "B" with a temperature rise rating of 250 deg. F maximum in 30 minutes of fire exposure. Provide UL label on each fire-resistance rated access door assembly.

2. Label Requirements: Comply with the label requirements of NFPA and UL. Fabricate units in accordance with requirements of NFPA Standard No. 252, ASTM E152, ASTM E119, UL 10B or UL263 corresponding to the construction type and the hourly rating shown.

1.5 DELIVERY STORAGE AND HANDLING

A. General: Store access door and panel items and accessories under cover and off the ground. Handle in such a manner so as to protect surfaces and to prevent distortion of, and other type of damage to, fabricated pieces.

PART 2 - PRODUCTS

2.1 MATERIALS, GENERAL

A. Metal Surfaces, General: For fabrication of access door and panel metal work which will be exposed to view in the finished work, use only materials which

are smooth and free of surface blemishes including pitting, seam marks, roller marks, rolled trade names and roughness. Remove such blemishes by grinding, or by welding and grinding, prior to cleaning, treating, and applying surface finishes.

B. Galvanized Carbon Steel Sheets: ASTM A653, hot-dip galvanized with G90 coating (minimum spangle), either commercial quality or structural quality, Grade 33, unless another grade is required for design loads.

C. Cold Rolled Carbon Steel Sheets: ASTM A366; commercial quality, stretcher leveled, free from scale, pitting or other defects.

D. Steel Angles, Plates, Bars, Rods and Other Steel Accessories: ASTM A36.

E. Stainless Steel.

1. ASTM A240; Provide the most suitable austenitic alloy, form and finish required to produce the Work. Provide Type 304 or Type 316 and low carbon Type 304L or 316L for components to be welded, unless otherwise noted.

a. Plate and Sheet: ASTM A480, Stretcher level sheets.

b. Bar Stock and Shapes: ASTM A276.

F. Aluminum: Provide alloy and temper recommended by aluminum producer or finisher for type of use and finish specified or shown, and with not less than the strength and durability properties of the alloy and temper designated below for each aluminum form required.

1. Extruded Bar and Shapes: ASTM B221, 6063-T6.

2. Plate and Sheet: ASTM B209, 6061-T6.

G. Fasteners and Anchorage Devices: Provide fasteners complying with the requirements of Industrial Fasteners Institute standards. Type, grade, class and style best suited for the respective purpose. Use countersunk flat-head Phillips type machine screws for exposed fasteners, except where Allen head screws are required. Use galvanized steel or stainless steel fasteners for exterior construction and for fastening components fabricated of galvanized steel.

1. Provide Type 304 or Type 316 stainless-steel fasteners for exterior use and zinc-plated fasteners with coating complying with ASTM B 633, Class Fe/Zn 5, where built into exterior walls and fastening components fabricated of galvanized steel.

H. Finishes

1. Ferrous Metal Finish: Chemically bonded with prime coat of baked-on electrostatically applied primer.

2. Stainless Steel: No. 4 (bright directional polish) unless otherwise shown or specified.

3. Aluminum Finishes: Finish designations prefixed by "AA" conform to the system established by the Aluminum Association for designating aluminum finishes. Provide as fabricated finish: AA-M10; (Mechanical Finish as fabricated, unspecified) unless otherwise shown or

specified.

2.2 FABRICATION, GENERAL

A. General: Provide each access door assembly manufactured as an integral unit, complete with components, accessories and fasteners ready for installation.

B. Forming: Form exposed surfaces free from warp, wave and buckle, with corners square, unless otherwise shown. Form molded members straight and true, with welded joints coped or mitered, well formed, and in true alignment. Dress welded joints on exposed surfaces smooth so they are invisible after finishing and flush with adjacent surfaces. Provide attachment devices and fasteners of type required to secure access doors and frames to contiguous support construction.

C. Reinforcing: Reinforce members and joints with structural shapes and plates in concealed locations, as necessary for adequate strength and rigidity. Provide concealed fastenings unless otherwise shown. Locate necessary exposed fastenings in an orderly pattern, in accordance with reviewed shop drawings. Separate dissimilar metals with dielectric separator to prevent galvanic action. Do not extend coatings onto exposed surfaces

D. Locations: Access doors, panels, related frames and accessories to be located in exterior areas, areas of high humidity or other locations noted, shall be hot dip galvanized and finish painted. Factory prime mild steel not galvanized. Access doors and panels exposed to public view shall be finish painted in color(s) as selected by the Engineer.

E. Locking Devices: Provide locking devices for access doors and panels in sufficient number for the size door to be installed. Provide six keys for keyed locks and masterkey locks for the entire project unless otherwise indicated or specified.

F. Strippable Protection: Prior to shipment protect finishes on exposed surfaces from damage by application of strippable temporary protective covering or other means.

2.3 FABRICATION, ACCESS DOORS AND PANELS

A. Flush Access Door for Installation in Toilet Rooms:

1. Features: Frame shall be 16 gauge stainless steel with a nominal 1 in. exposed frame flange. Door shall be 14 gauge stainless steel, fitted flush with frame flange. Reinforce access doors over 24 in. in width to prevent sagging. Provide galvanized steel anchors appropriate for substrate. Provide concealed spring hinges permitting 175° opening. Provide flush key operated stainless steel cylinder locks.

2. Provide one of the following:

   a. "Style TMS" (J. L. Industries).

   b. "Type DSC-214M Stainless Steel" (Karp Associates Inc.).

   c. "Style MS" (Milcor).

   d. "NT Series Stainless Steel" (Nystrom, Inc.).

e. Or approved equal.

B. Flush Access Door for Installation in Masonry and Ceramic Tile Substrates, not Toilet Rooms:

1. Features: Frame shall be 16 gauge steel with a nominal 1 in. exposed frame flange. Door shall be 14 gauge steel, fitted flush with frame flange. Reinforce access doors over 24 in. in width to prevent sagging. Provide galvanized steel anchors appropriate for substrate. Provide concealed spring hinges permitting 175° opening. Provide flush screwdriver operated cam locks for access doors except provide flush key operated cylinder locks for access doors in public areas.

2. Provide one of the following:

a. "Style TM" (J. L. Industries).

b. "Type DSC-214M" (Karp Associates Inc.).

c. "Style M" (Milcor).

d. "NT Series" (Nystrom, Inc.).

e. Or approved equal.

2.4 FABRICATION, FIRE RATED DOORS

A. General: Construct doors and frames to comply with the requirements of the NFPA and Underwriters' Laboratories, Inc. for "B" Label, 1-1/2 hour rating. Install UL label on each door in a non-exposed location unless otherwise required by the NYC Building Department.

B. Fire Rated Steel Access Door

1. Features: Frame shall be 16 gauge steel with a nominal 1 in. frame flange and integral appropriate anchors. Door shall be 2 in. thick, fabricated of 20 gauge steel face sheets, sandwich construction, with a non-combustible insulation core. Provide continuous stainless steel piano type hinge with stainless steel pin for the length of the door and an automatic latching device with operating turn ring (flush key operated cylinder lock in public areas) and interior latch release. Provide an automatic spring door closer for doors.

2. Manufacturer:

a. "Style FD" (J. L. Industries).

b. "Type KRP-150FR" (Karp Associates, Inc.).

c. "IT Series" (Nystrom, Inc.).

d. Or approved equal.

PART 3 - EXECUTION

3.1 GENERAL

A. Manufacturer's Instructions: Prepare substrates and install the work of this Section, including components, and accessories in accordance with the manufacturer's instructions, except where more stringent requirements are

shown or specified, and where project conditions require extra precautions or provisions to ensure satisfactory performance of the Work.

3.2 EXAMINATION

A. Verification of Conditions: Examine the areas to receive the Work and the conditions under which the Work would be performed. Contractor shall remedy conditions detrimental to the proper and timely completion of the Work. Do not proceed until unsatisfactory conditions have been corrected. Do not hang doors with an apparent defect.

3.3 PREPARATION

A. Substrate Acceptability: Commencement of installation shall constitute acceptance of substrate conditions by the Installer.

3.4 INSTALLATION

A. Verification of Dimensions: Verify dimensions of openings by field measurements so that access doors and related items will be accurately designed, fabricated and fitted to the substrate.

B. Coordination: Coordinate access doors and panels with the work of other Sections and provide items to be placed during the installation of other work. Coordinate delivery of such items to the project site. Deliver items which are to be built into the work of other Sections in time so as not to delay the progress of the Work.

C. Installation: Install access doors and panels in locations shown, plumb, level and in line with adjacent materials where required. Provide fastenings as indicated on the final shop drawings. Fit exposed connections accurately together to form tight hairline joints. Adjust hardware and doors for proper operation.

D. Installation of Fire Rated Access Doors: Install fire rated items in a manner which will not compromise the ratings of the substrate where installation is scheduled.

3.5 ADJUSTING

A. Touch-Up: Paint and touch-up paint with the specified paint system. Touch up galvanized surfaces in accordance with ASTM A780.

B. Adjustment: Adjust doors and hardware after installation for proper operation.

C. Damaged Doors: Remove and replace doors and frames that are warped, bowed, or otherwise damaged.

3.6 CLEANING

A. Cleaning: Clean surfaces and leave free from smears. Repair minor scratches and other finish imperfections. Immediately after erection, clean field welds, bolted connections, marred and abraded surfaces. Remove and replace panels or frames that are warped, bowed, or otherwise damaged.

3.7 PROTECTION

A. Protection: Protect finished surfaces against damage during construction and remove protection at time of substantial completion.

END OF SECTION

SECTION 08 33 00 – HOLLOW METAL DOORS AND FRAMES

PART 1 - GENERAL

1.1 SUMMARY

A. General: Provide hollow metal doors and frames in accordance with requirements of the Contract Documents. The Work of this Section includes, but is not limited to the following:

1. Hollow metal doors and frames.
    a. Type 316 Stainless Steel Doors and Frames – Exterior
    b. Type 304 Stainless Steel Doors and Frames - Interior
2. Installation of hardware on hollow metal doors and frames.

B. Related Work Specified Elsewhere

1. Furnishing of finish hardware as specified in Section 08 71 00 " Finish Hardware".
2. Finish painting of hollow metal doors and frame requiring finish painting is specified in Section 09 90 00 "Paints and Coatings".

1.2 REFERENCES

A. General: Comply with the applicable provisions of the referenced standards except as modified by governing codes and the Contract Documents. Where a recommendation or suggestion occurs in the referenced standards, such recommendation or suggestion shall be considered mandatory. In the event of conflict between referenced standards, this specification or within themselves, the more stringent standard or requirement shall govern.

1. American National Standards Institute (ANSI)
    a. ANSI 250.8” Recommended Specifications for Standard Steel Doors and Frames".
    b. ANSI/DHI A115 "Specifications for Hardware Preparations in Standard Steel Doors and Frames" and ANSI A 250.6 "Hardware on Steel Doors (Reinforcement Application)”.
    c. ANSI/DHI A115.IG “Installation Guide for Doors and Hardware"
    d. Hollow metal doors and frames ANSI A250.10 "Test Procedure and Acceptance Criteria for Prime Painted Steel Surfaces".
2. Industrial Fasteners Institute (IFC): "Fastener Standards Book".
3. Steel Door Institute (STI)
    a. SDI-112 “Galvanized/Galvannealed Standard Steel Doors and Frames”.
4. National Association of Architectural Metal Manufacturers (NAAMM):

a. "Metal Finishes Manual".

b. NAAMM Standard HHMA 810 "Hollow Metal Doors".

c. NAAMM Standard HHMA 820 "Hollow Metal Frames".

d. NAAMM Standard HHMA 831 "Hardware Locations for Hollow Metal Doors and Frames".

e. NAAMM Standard HHMA 840 "Installation and Storage of Hollow Metal Doors and Frames".

5. American Welding Society (AWS)

a. AWS D1.1 "Structural Welding Code - Steel".

b. AWS D1.3 "Structural Welding Code - Sheet Steel".

6. ICC ANSI A117.1 - 2009

1.3 DEFINITIONS

A. Steel Sheet Thicknesses: Thickness dimensions, including those referenced in ANSI A250.8, are minimums as defined in referenced ASTM standards.

1.4 SYSTEM DESCRIPTION

A. Performance Requirements for Doors and Frames.

1. Wind Loading: Design, fabricate and install hollow metal doors so that the total, installed, units will withstand the inward and outward pressure normal to the plane of the door as shown on Structural Drawings.

2. Building Movement: Design, fabricate and install hollow metal doors to withstand building movements including loading deflections, shrinkage, creep, seismic and similar movements.

3. Anchorage: Anchorage disengagement or breakage shall not occur when installed hollow metal window or door frame unit is subjected to a force equal to 2.5 times the design load. Anchorage shall be properly braced in three orthogonal directions (vertical, transverse, and longitudinal) to resist specified loadings from any direction (both positive and negative pressure).

4. Water Drainage: Make provisions at sill to drain water and condensation to exterior face of the frames. Show locations and sizes of these provisions on the shop drawings.

5. Temperature Requirements: Design, fabricate and install hollow metal window frame and door component parts to provide for expansion and contraction of the window or door frame over an interior temperature range of +55 deg. F. to 100 deg. F. without buckling, sealed joint failure, undue stress on members or anchors, and other detrimental effects.

6. Unacceptable Conditions: Vibration harmonics, wind whistles, noise or vibration created by thermal movement, structural movement, or wind; thermal movement transferred to building structure; loosening,

weakening or failure of fasteners, attachments or other components.

7. Design Modifications: Make design modifications of work shown only as may be necessary to meet performance requirements and coordinate the work. Variations in details and materials which do not adversely affect appearance, durability or strength shall be submitted for review.

1.5 SUBMITTALS

A. Product Data: Provide manufacturer's literature and specifications describing the general properties of each material and accessory to be used in the Work including a material list with technical data documenting the location and primary function, quality, and performance of each material component or system to be used in the Work, including primary characteristics as required by the Contract Documents.

B. Shop Drawings: Submit shop drawings for the fabrication and installation of the Work. Prepare details at not less than 3 in. = 1 ft. minimum scale.

1. Submit shop drawings for hollow metal doors and frames which shall include for each opening, details of frame, elevation of door or window design type, conditions at opening, details of construction including horizontal and vertical edge conditions,, details of joints and connections, description of anchorage and accessory items and location and preparation of reinforcement and installation requirements for finish hardware.

a. Coordination Drawings for Hollow Metal Doors and Frames: As part of shop drawing submittal, submit complete coordination drawings of each door opening, including door and frame, drawn to scale and coordinating door hardware. Show elevations of each door design type, showing dimensions, locations and types of door hardware.

b. Schedule of Doors and Frames: As part of shop drawing submittal, submit a complete schedule of doors and frames utilizing reference numbers for details and openings as shown.

c. Setting Drawings: Provide setting drawings and templates for the location of hollow metal window and door fabrications items that are to be embedded in or anchored to concrete or masonry.

C. Samples: Label samples to indicate product, characteristics, and location in the Work. Samples will be reviewed for color and appearance only. Furnish sufficient samples to establish the full range of colors and textures for materials exposed in the finished work. Compliance with other requirements is the responsibility of the Contractor. Submit the following:

1. 18 in. x 24 in. cut-away sample door with provisions for lockset and a pair of hinges and corner section of door frame. Include samples of anchorage. Provide a metal sample of a entrance door which is indicative of the hot dip galvanized finish.

D. Quality Control Submittals

1. Certificates

   a. Document Review: Before commencing work, submit a written statement signed by the Contractor and the Applicator certifying that the Contract Documents, shop drawings and product data have been reviewed with material manufacturers' qualified technical representatives and that they agree the selected materials are proper, compatible with contiguous materials and adequate for the application shown.

   b. Primer Certification: Certification that the prime finish on the hollow metal doors and frames has been tested and complies with ANSI A250.10

   c. Reports: copies of welder pre-qualification and other welding procedures in form prescribed in AWS D1.1.

2. Primer: Description of primer and method of application proposed for factory primed hollow metal doors and frames. Describe process utilized in treating and priming galvanized and metallic coated sheet hollow metal doors and frames.

1.6 QUALITY ASSURANCE

A. Qualified Installer: The entity performing the work of this section must, within the last five (5) consecutive years prior to the bid opening have successfully completed in a timely fashion at least three (3) projects similar in scope, size and type to the required work.

B. Single Source Responsibility: Obtain hollow metal doors and frames from one source of a single manufacturer. Obtain accessory products used in conjunction with hollow metal doors and frames from the hollow metal doors and frames manufacturer or from sources acceptable to the hollow metal doors and frames manufacturer. The fabricator/manufacturer shall must, for the past five (5) years, have been regularly engaged in the manufacture of material or equipment similar in type to that required for this Project. Such material or equipment provided by the manufacturer must have been in satisfactory service for not less than five (5) years.

C. Requirements of Regulatory Agencies

   1. General: Comply with applicable requirements of the laws, codes, ordinances and regulations of Federal, State and Municipal authorities. Obtain necessary approvals from the NYC Building Department.

D. Pre-Installation Meetings: Prior to the start of the Work, meet at the Project site to review methods and sequence of hollow metal doors and frames installation, special details and conditions, standard of workmanship, testing and quality control requirements, job organization and other pertinent topics related to the Work.

1.7 DELIVERY, STORAGE AND HANDLING

A. Precautions: Protect hollow metal door, window and frame units from damage during transit, storage and installation. Tool marks, rust, blemishes and other

damage on exposed surfaces will not be acceptable. Store material in a dry location, off the ground and in a manner as to prevent deterioration. Avoid using nonvented plastic or canvas shelters that could create a humidity chamber. If packaging becomes wet, remove cartons immediately. Provide spaces between stacked units to permit air circulation.

B. Delivery:

1. Deliver hollow metal door frames packaged with one (1) frame per bundle, marked with frame type, size, swing and wall thickness. Deliver welded frames with two removable spreader bars across bottom of frames, tack welded to jambs and mullions Inspect doors and frames on delivery for damage, and notify shipper and supplier if damage is found.

2. Deliver hollow metal window frames packaged with one (1) frame per bundle, marked with frame type, size, and wall thickness. Deliver welded frames with two removable diagonal spreader bars across bottom of frames, tack welded to jambs and mullions Inspect doors and frames on delivery for damage, and notify shipper and supplier if damage is found.

PART 2 - PRODUCTS

2.1 MATERIALS

A. Metal Surfaces, General: For hollow metal door, window and frame work which will be exposed to view in the finished work, use only materials which are smooth and free of surface blemishes including pitting, seam marks, roller marks, rolled trade names and roughness. Remove blemishes by grinding, or by welding and grinding, prior to cleaning, treating, and applying surface finishes.

B. Stainless Steel

1. ASTM A240; Provide the most suitable austenitic alloy, form and finish required to produce the Work. Provide Type 316 and low carbon 316L for components to be welded (exterior), type 304 and low carbon 304L for components to be welded (interior), unless otherwise noted.

a. Provide stainless steel sheet for all hollow metal doors and frames.

2. Plate and Sheet: ASTM A480, Stretcher level sheets.

3. Bar Stock and Shapes: ASTM A276.

4. Round, Square and Rectangular Welded Tubing: ASTM A554, MT 316, or MT 316L as standard with manufacturer.

C. Structural Steel Shapes, Plates and Bars: ASTM A36.

D. Stainless Sheet Steel for Hollow Metal Doors: Stretcher leveled standard of flatness for doors.

E. Reinforcing Steel, Supports and Anchoring Devices: Stainless steel.

F. Core Filler for Hollow metal Doors: Sound deadening and heat-retarding mineral fiber insulating material. At doors required to have temperature rise

rating, provide mineral fiberboard core.

1. Exterior Thermal-Rated (Insulated) Doors: Provide doors fabricated with cores which have a thermal-resistance value (R-value) of not less than 4.0 deg F x h x ft.^{2}/Btu when tested according to ASTM C1363

G. Fasteners: Stainless steel.

1. Bolts and Nuts: Stainless steel.

2. Expansion Anchors: Anchor bolt and sleeve assembly of material indicated below with capability to sustain, without failure, a load equal to six times the load imposed when installed in unit masonry and equal to four times the load imposed when installed in concrete:

a. Interior Material: Stainless steel.

3. Machine Screws: ANSI/ASME B18.6.3, and ASTM A307, carbon steel, Phillips flat head.

H. Dielectric Separator SSPC- Paint 12 compounded for 15 mil dry film thickness per coat; Cold applied type, inert-type noncorrosive compound free of asbestos fibers, sulfur components, and other deleterious impurities, non-sagging, resistant to severe corrosion conditions; applied in two coats for an overall minimum dry film thickness of 30 mils.

I. Grout: Comply with ASTM C476, with a slump of 4 in. for standard hollow metal door and window frames built into concrete or masonry, as measured according to ASTM C143.

2.2 FABRICATION, GENERAL

A. Supplementary Parts: Include supplementary parts necessary to complete fabrications work though not definitely shown or specified. Such parts include, but are not limited to, interface components necessary for the installation or anchorage to Work.

B. Verification of Measurements and Dimensions and Coordination and Schedule of Work: Verify measurements and dimensions at the job site and cooperate in the coordination and scheduling of the work of this Section with the work of related trades (with particular attention given to the installation of items embedded in concrete and masonry).

C. Formation of Exposed Work: Form exposed work true to line and level with accurate angles and surfaces and straight sharp edges. Form bent metal corners to smallest radius possible without causing grain separation or otherwise impairing work.

D. Formation of Exposed Connections: Form exposed connections with hairline joints, flush and smooth; using concealed fasteners where possible. Exposed threaded portion of bolts and screws shall be cut off flush with adjacent metal. Cut, drill, punch and tap as required for the installation and attachment of other work to metal fabrications work. Shear and punch metals cleanly and accurately. Remove burrs. Remove sharp or rough areas on exposed traffic surfaces.

E. Formation of Metal Work: Form metal work built in with concrete or masonry for anchorage, or provide suitable anchors, expansion shields, or other

anchoring devices shown or required to provide support for intended use. Furnish metal work in ample time for setting and securing in place.

F. Procedures for Joints and Welds: Make joints as strong and rigid as adjoining sections. Make welds continuous along entire line of contact, except where spot welding is indicated. Grind exposed welds flush and smooth to match and blend with adjoining surfaces. Welded connections may be used where bolted connections are shown. Fabricate joints exposed to weather in a manner to exclude water, or provide weep holes where water may accumulate.

1. Make up threaded connections tight so that threads are entirely concealed. Shoulder and head, dowel and pin abutting bars. Provide bolt and screw heads flat and countersunk in exposed work. Carefully machine, fit and secure removable members by means of Allen-head set screws of proper size and spacing.

G. Galvanizing

1. ASTM A123 for galvanizing rolled, pressed and forged steel shapes, plates, bars, strip and for assembled steel products.

2. Items to be Galvanized: Galvanize ferrous metal utilized on items embedded in concrete, unless otherwise specified. Utilize hot dip galvanized steel for all steel doors and frames. Galvanize other items where specified or shown. Finished hot dip galvanized surfaces of all steel doors and frames shall match with regard to aesthetics.

H. Preassembly of Items: Preassemble items in shop to greatest extent possible to minimize field splicing and assembly. Following trial fit, disassemble units only as necessary for shipping and handling. Clearly mark units for reassembly. Provide alignment and splice plates for accurate field fit.

2.3 HOLLOW METAL DOOR AND FRAME FABRICATION

A. General: Fabricate hollow metal doors and frames to the design and dimensions shown and scheduled in accordance with best shop practices and in compliance with SDI 117 "Manufacturing Tolerances Standard Steel Door and Frames". Unless otherwise shown or specified, fabricate doors and panels to a thickness of 1-3/4 in. Take field measurements where coordination with adjoining work is necessary.

B. Workmanship: Make hollow metal door and frame work strong, rigid, neat in appearance and free from defects. Reinforce corners of doors as required to prevent twisting or sagging. Form exposed surfaces free from warp, wave and buckle, with corners square, unless otherwise shown. Form molded members straight and true, with welded joints, ground smooth, coped or mitered, well formed, and in true alignment. Provide a full miter continuously welded on back side at frame corners with edges straight and true. Grind welds smooth and flush on exposed surfaces so they are invisible after finishing. Accurately machine, file and fit exposed connections with hairline joints unless otherwise shown. Conceal fastenings wherever possible. Countersink exposed screws using flat, Phillips head screws. Provide welds of adequate strength and durability.

C. Clearances: Provide clearances for doors, not otherwise specified or shown,

as follows: 1/8 in. at jambs and heads, 1/8 in. at meeting stiles of pairs of doors and 3/8 in. at bottom where no threshold or carpet is required. Where a threshold is scheduled provide 3/8 in. clearance above the threshold. Where carpet is scheduled provide 3/8 in. clearance above the carpet. Prepare doors to receive weatherstripping where required.

1. Round lock edges of stiles for pairs of double acting doors; bevel lock edge 1/8 in. in 2 in. for other hollow metal doors.

D. Preparation for Hardware: Mortise, reinforce, drill and tap doors and frames at factory to receive mortise type hardware including installation of 2 in. dia. galvanized steel conduit for routing of low voltage wire from electrical hinges to electro- mechanical locks, in accordance with reviewed hardware schedule and templates.

Provide steel reinforcing, drill and tap for doors and frames to receive surface applied hardware, except at push plates and kickplates provide reinforcing only. Use steel secured by spot welding as reinforcement. Prepare doors and frames in accordance with ANSI A250.6 and ANSI A115, except with the following modifications:

1. Butt and Intermediate Pivot Hinge Reinforcements: 10 gauge or equivalent number of threads on doors and 7 gauge on frames.
2. Top and Bottom Pivot Reinforcements: 7 gauge steel by size as required by hardware manufacturer.
3. Lock Fronts: 12 gauge by size as required by approved hardware manufacturer.
4. Flush Bolts: 12 gauge by size as required by approved hardware manufacturer.
5. Lock Reinforcement Units: 14 gauge by size as required by hardware manufacturer.
6. Closers and Hold Open Arms: 12 gauge one-piece channel, size as required by approved hardware manufacturer.
7. Panic Device Reinforcement: 1/8 in. thick by 10 in. high by 4 in. wide centered on panic device case body, unless otherwise recommended by panic device manufacturer.
8. Other Hardware: Other hardware reinforcements as required for adequate strength and anchorage.
9. Alternate Reinforcement: In lieu of reinforcement specified, hardware manufacturers' recommended reinforcing units may be used. Submit for review.

E. Flush Seamless Door Fabrication

1. Standards and Door Construction: Fabricate flush doors with minimum gauge face sheets below, with edges welded and finished flush. Provide seamless construction, with no seams or joints on door faces, and continuous vertical mechanical interlocking joints at lock and hinge edges; intermittently welded, with one inch long tack-welds spaced a minimum of 6 in. o.c. vertically. Provide tack-welds at top

and bottom of each hardware cutout. Fill edge seams with epoxy filler and grind smooth. No body filler or "bondo" shall be allowed. Comply with the following:

a. Compliance: Provide metal doors complying with ANSI 250.8 for level and model and ANSI A250.4 for physical-endurance level and models:

1) Interior Flush Doors below 7 ft. height: ANSI 250.8 Level 2 and ANSI A250.4 Physical Performance Level 'B', heavy-duty, Model 2, Seamless Design, minimum 18 gauge cold-rolled sheet steel faces or metallic coated sheet steel faces.

2) Interior Flush Doors above 7 ft. height: ANSI 250.8 , Level 3 and ANSI A250.4 Physical Performance Level 'A', extra heavy-duty, Model 2, Seamless Design, minimum 16 gauge cold-rolled sheet steel faces or metallic coated sheet steel faces.

3) Exterior Flush Doors: ANSI 250.8, Level 3 and ANSI A250.4 Physical Performance Level 'A', extra heavy-duty, Model 2, Seamless Design, minimum 16 gauge stainless steel faces. Provide flush stainless steel cap at top of door at inverted top channels. Provide weep-hole openings in bottom of exterior doors to permit moisture to escape. Seal joints in top edges of doors against water penetration.

b. Reinforcement: Reinforce face sheets of flush doors with 20 gauge interlocking vertical C or Z shaped reinforcing members spaced not over 6 in. apart and spot welded to face sheets not more than 6 in. o.c. Provide flush inverted 16 gauge steel channels welded to face sheets at top and bottom of door. Place filler between reinforcing members for full height of door.

c. Framing for Temperature Rise Rated Doors: A continuous mineral fireboard core, permanently bonded to the inside face of the outer sheets.

F. Flush Panel Fabrication

1. Forming of Panels: Form to thicknesses specified and dimensions shown and comply with applicable requirements for flush doors. Prepare panels for concealed support and anchorage.

G. Hollow Metal Door Frame Fabrication

1. General: Provide combination type, fully welded, hollow metal door frames (knocked-down frames will not be accepted) to be used as both door buck and trim, formed to standard frame profiles shown and, unless otherwise shown, of the following minimum gages:

a. Interior Door Frames: 16 gauge steel for doors 7 ft. and under; 14 gauge steel for doors above 7 ft and/or over 4 ft. wide. In addition, frames scheduled to receive electrical locking devices shall be minimum 14 gauge steel.

b. Exterior Frames: 14 gauge stainless steel.

c. Cased Opening Frames: 14 gauge steel.

d. Code Requirements: As required per the NYC Building Department.

2. Corner Joints: Corner joints of frames shall have contact edges closed tight, with trim faces mitered and continuously welded and stops mitered. The use of gussets shall not be permitted.

3. Throat Opening: Where partitions are set into door frames, fabricate frames with throat opening 1/16 in. larger than partition thickness unless otherwise shown or specified.

4. Anchorage

a. Provide tee shaped corrugated or perforated metal anchors into adjoining masonry or concrete construction. Use adjustable anchors with friction fit for frames set in masonry. Weld to frames set in concrete. Fabricate anchors of steel no lighter than the gauge used for the frame, 2-1/2 in. wide by 10 in. long, three (3) per jamb up to 7 ft. high and four (4) per jamb up to 8 ft. high.

b. Anchor frame jambs to concrete or masonry which has been placed prior to setting of frames with 3/8 in. countersunk concealed flat head bolts into expansion type shields or inserts, provide one not more than 6 in. from the top and bottom of each jamb with intermediate anchors spaced a maximum of 26 in. o.c. with a minimum of 4 per jamb. Apply removable stops to cover anchor bolts.

c. Provide 16 gauge steel channel temporary spreaders at the bottom of 3 sided frames to prevent distortion during shipment and storage and to hold frames in proper position until anchorage and adjacent construction has been completed.

d. Terminate bottom of frames at the indicated finished floor level. Where floor fill or setting beds occur support frame by adjustable clip angles anchored to the structural substrate. Angle floor clips shall be 12 gauge, welded to frame and punched for two (2) 3/8 in. fasteners.

5. Mullions and Transom Bars: Provide mullions and transom bars of closed or tubular construction, or as otherwise shown. Attach members to heads and jambs of frame with butt-welded and ground smooth joints unless shown to be removable. Reinforce the joints with concealed clip angles of the same thickness as the frame.

6. Head Reinforcement: Reinforce head of frames over 3 ft. wide with 12 gauge steel channel unless a structural lintel is provided to support the wall construction above the frame or unless there is no wall construction above the frame.

7. Mortise Enclosures: Provide full enclosing electrical junction boxes or mortar shields over mortises. Provide removable access plates in the

heads of frames to receive concealed door closers. Offset reinforcement so that faces of hinges or keepers are flush with face of the frame rebate.

8. Rubber Door Silencers: Provide holes for rubber door silencers: 3 for single doors and 4 for pairs of doors. Install plastic plugs in silencer holes to keep holes clear during contiguous construction. Remove plastic plugs and replace with rubber door silencers after hardware installation.

9. Back Coating of Frames: Where frames are to be fully grouted, coat the back of the frame with bituminous paint.

2.4 DOOR LOUVERS

A. Ventilation Louvers: Provide minimum 20 gauge stainless steel sheet stationary ventilation type louvers (blades and baffles) matching inverted 'Y' blade type complete with 18 gauge stainless steel frame. Do not stamp louvers directly into door panels. Size and location as indicated on drawings.

2.5 FINISHES

A. Stainless Steel Finishes

1. Finish: No. 4 (satin directional polish) to match Engineer's approved sample.

B. Shop Prime Painting

1. Only prime paint steel doors and frames where scheduled.

2. Cleaning and Treating: Clean, treat and paint surfaces of fabricated steel door and frame work, inside and out, whether exposed or concealed in the construction.

a. Thoroughly clean metal surfaces of loose scale, shavings, filings, dirt and other deleterious materials by use of wire brushes or other effective means. Remove grease and oil by one of the methods specified in SSPC-SP-1 "Solvent Cleaning". Fill as required to fill seams in edges.

b. Prepare galvanized and metallic coated sheet steel doors and frames to receive prime paint by chemically treating surfaces with phosphate compound or other approved means to assure maximum paint adhesion. Galvanized and metallic coated sheet steel doors and frames shall be treated and prime painted prior to finish coats of paint. Comply with requirements of Section 09900 "Paints and Coatings"

3. Primer for Steel not Galvanized: Apply a sufficient number of coats of an approved enamel filler, baked on, to obtain uniformly smooth exposed surfaces. In addition, apply one coat of light-colored primer, baked on, to both inside and outside surfaces. Touch-up surfaces having runs, smears or bare spots.

a. Apply 2 coats of metal primer to reinforcement and attachment steel and framing which will be in contact with masonry or

concrete.

b. Comply with ANSI A250.3 for performance and acceptance criteria. Provide minimum mil thicknesses of coatings as recommended by the paint manufacturer.

PART 3 - EXECUTION

3.1 GENERAL

A. Manufacturer's Instructions: Prepare substrates, and install the work of this Section, including components, and accessories in accordance with the manufacturer's instructions, except where more stringent requirements are shown or specified, and where project conditions require extra precautions or provisions to ensure satisfactory performance of the Work.

3.2 EXAMINATION

A. Verification of Conditions: Examine the areas to receive the Work and the conditions under which the Work would be performed. Contractor shall remedy conditions detrimental to the proper and timely completion of the Work. Do not proceed until unsatisfactory conditions have been corrected.

3.3 PREPARATION

A. Substrate Acceptability: Commencement of installation shall constitute acceptance of substrate conditions by the Installer.

3.4 HOLLOW METAL DOOR AND FRAME INSTALLATION

A. Hollow Metal Frames: Set hollow metal frames at locations shown and scheduled, in perfect alignment and elevation, plumb, level, straight, true and free from rack. Brace frames to prevent displacement. Comply with provisions in SDI 105, unless otherwise indicated.

1. Place frames before construction of enclosing walls and ceilings
2. Extend frame anchorages below fills and finishes, except over membrane waterproofed areas. Anchor bottom of frames to floors with anchor bolts or with power driven fasteners. Coordinate the installation of built-in anchors for wall and partition construction as required with other work. For openings 90 in. or more in height, install an additional anchor at hinge and strike jambs.
3. In masonry construction, provide at least three wall anchors per jamb; install adjacent to hinge location on hinge jamb and at corresponding heights on strike jamb. Acceptable anchors include masonry wire anchors and masonry T-shaped anchors.
4. In metal-stud partitions, provide at least three wall anchors per jamb; install adjacent to hinge location on hinge jamb and at corresponding heights on strike jamb. Attach wall anchors to studs with screws.
5. After wall construction has been completed, remove temporary braces. Leave surfaces smooth and undamaged.

B. Adjust and securely brace hollow metal door frames for squareness, alignment, twist, and plumb to the following tolerances:

1. Squareness: Plus or minus 1/16 in., measured at door rabbet on a line 90 degrees from jamb perpendicular to frame head.

2. Alignment: Plus or minus 1/16 in., measured at jambs on a horizontal line parallel to plane of wall.

3. Twist: Plus or minus 1/16 in., measured at opposite face corners of jambs on parallel lines, and perpendicular to plane of wall.

4. Plumbness: Plus or minus 1/16 in., measured at jambs on a perpendicular line from head to floor.

C. Hollow metal Door Installation: Comply with ANSI A250.8. Fit hollow-metal doors accurately in frames, within clearances specified in ANSI A250.8. Shim as necessary to comply with SDI 122 and ANSI/DHI A115.1G.

D. Finish Hardware: Apply hardware in accordance Section 08700 "Finish Hardware" of these Specifications. Drill and tap for machine screws as required. Do not use self- tapping sheet metal screws. Anchor panels in place with concealed fasteners. Adjust door installation to provide uniform clearance at head and jambs, and to contact stops uniformly. Remove and replace doors which are found to be warped, bowed or otherwise damaged and cannot be properly fitted in frames.

3.5 ADJUSTING

A. Operation: Re-adjust, re-hang or replace doors which do not swing or operate freely.

B. Prime-Coat Touchup: Immediately after installation, sand smooth rusted or damaged areas of prime coat and apply touch up of compatible air-drying primer. Upon completion of installation, clean exposed metal surfaces and leave ready for final painting.

C. Procedures for Cleaning and Touch-Up for Hot Dip Galvanized Steel Surfaces: Immediately after erection, clean field welds, bolted connections, marred and abraded surfaces. Touch up galvanized surfaces in accordance with ASTM A780.

3.6 CLEANING

A. Maintenance: Maintain the hollow metal doors and frames throughout the construction period in a clean and properly protected condition so that they will not be damaged at the time of acceptance by the City of New York. Cleaning and protective methods shall be carefully selected, applied and maintained so that finishes will not become uneven or otherwise impaired as a result of unequal exposure to light and weathering. Remove deleterious materials from surfaces immediately. Protect from breakage immediately upon installation.

3.7 PROTECTION

A. Protect units during construction period so that they will be without indication of deterioration, use or damage at time of acceptance.

END OF SECTION

SECTION 08 33 23 – OVERHEAD COILING DOORS

PART 1 - GENERAL

1.1 SUMMARY

A. General: Provide overhead coiling doors in accordance with the Contract Documents. The Work of this Section includes coiling door and grille assemblies, including curtains, guides, counter-balance mechanism, hardware, operators, and installation accessories.

B. Related Work Specified Elsewhere

1. Steel hangers and framing are specified in Section 05 50 00, “Metal Fabrications.”

2. Furnishing of locks is specified in Section 08 71 00 “Hardware.”

3. Finish painting of exposed metal surfaces requiring painting other than prefinished items is specified in Section 09 91 00, “Painting.”

4. Electrical service and connections for motor operators, controls, limit switches and system disconnect switches is specified in applicable Division 26 Electrical specification sections.

1.2 REFERENCES

A. General: Comply with the applicable provisions of the referenced standards except as modified by governing codes and the Contract Documents. Where a recommendation or suggestion occurs in the referenced standards, such recommendation or suggestion shall be considered mandatory. In the event of conflict between referenced standards, this specification or within themselves, the more stringent standard or requirement shall govern.

1. American Welding Society (AWI)

a. AWS D1.1 “Structural Welding Code – Steel.”

b. AWS D1.3 “Structural Welding Code – Sheet Steel.”

2. Industrial Fasteners Institute (IFI): “Fastener Standards Book.”

3. National Electric Code (NEC): “NFPA 70: National Electrical Code.”

4. National Electrical Manufacturers Association (NEMA).

a. NEMA ICS 1: Industrial Control and Systems General Requirements

b. NEMA ICS 6: Industrial Control and Systems Enclosures

1.3 SYSTEM DESCRIPTION

A. System Description: Overhead coiling doors consist of a powder coated galvanized steel slated door designed to travel in an overhead vertical plane, smoothly and without binding. Curtain shall be driven to the open and close position by a motor operated controller activated by control panels located as noted.

B. Performance Criteria

1. Structural Performance, Exterior Doors: Exterior overhead coiling doors shall withstand the wind loads, the effects of gravity loads, and loads and stresses within limits and under conditions indicated according to SEI/ASCE 7.

a. Wind Loading: Design, fabricate and install units so that the total, installed unit will withstand project, ASCE-7, and New York City Building Code required inward and outward pressure.

b. Deflection Limits: Design overhead coiling doors to withstand design wind load without evidencing permanent deformation or disengagement of door components.

2. Thermal Performance, Exterior Doors: Exterior doors shall have an R-value of 6.25 calculated in accordance with ASHRAE requirements.

3. Operation Cycles: Provide overhead coiling door components and operators capable of operating for not less than 50,000 cycles. One operation cycle is complete when a door is opened from the closed position to the fully open position and returned to the closed position.

C. Design Modifications: Make design modifications of work shown only as may be necessary to meet performance requirements and coordinate the work. Variations in details and materials which do not adversely affect appearance, durability or strength shall be submitted to the Engineer for review. Maintain the general design concept without altering profiles and alignments shown.

1.4 SUBMITTALS

A. Product Data: Submit for Engineer's action. Submit manufacturer's literature, specifications and installation instructions describing the general properties of each material and accessory to be used in the Work. Include the following:

1. Setting drawings, templates, and installation instructions for built-in or embedded anchor devices.

2. Summary of forces and loads on walls and jambs.

3. Motors: Show nameplate data and ratings; characteristics; mounting arrangements; size and location of winding termination lugs, conduit entry, and grounding lug; and coatings.

4. Provide documentation from a certified testing agency that door operators have been tested for a minimum of 50,000 cycles.

5. Finish data referenced to requirements specified herein.

B. Shop Drawings: Submit for Engineer's action. Submit shop drawings for the fabrication and installation of the Work. Prepare details at not less than 3 in. = 1 ft. minimum scale. Submit shop drawings showing location and extent of coiling doors. Include plans, elevations, large-scale details of anchorages, dimensions, weights, conditions at openings and for operating clearances. Include location and installation requirements for electric operators.

1. Wiring Diagrams: Submit wiring diagrams detailing wiring for coiling door operators, signal, and control systems differentiating clearly

between manufacturer-installed wiring and field-installed wiring. Show the locations of connections to electrical service provided as a unit of work under other Sections.

C. Samples: Submit for Engineer's action. Label samples to indicate product, characteristics, and location in the Work. Samples will be reviewed for color and appearance only. Furnish sufficient samples to establish the full range of colors and textures for materials exposed in the finished work. Compliance with other requirements is the responsibility of the Contractor. Provide the following:

1. Submit three (3) 12 in. square samples of each type of door curtain complete with specified powder coating.

D. Quality Control Submittals: Submit for Engineer's information.

1. Certificates

a. Document Review: Before commencing work, submit a written statement signed by the Contractor and the Installer certifying that the Contract Documents, shop drawings and product data have been reviewed with material manufacturers' qualified technical representatives and that they agree the selected materials are proper, compatible with contiguous materials and adequate for the application shown.

b. Certification signed by manufacturer of the coiling doors certifying that their products are approved for use in the City of New York.

E. Closeout Submittals: Submit, for City of New York's documentation.

1. Warranties: Special warranties as specified.

2. Maintenance Manuals: Two (2) copies of bound maintenance manuals, describing the materials, and procedures for cleaning and maintaining coiling door. Include manufacturer's data describing the materials and finishes used in the work including parts lists.

1.5 QUALITY ASSURANCE

A. Qualified Installer: The entity performing the work of this section must, within the last five (5) consecutive years prior to the bid opening have successfully completed in a timely fashion at least three (3) projects similar in scope, size and type to the required work.

B. Single Source Responsibility: Obtain coiling doors from one source of a single manufacturer. Obtain accessory products used in conjunction with coiling doors from the coiling door manufacturer or from sources acceptable to the manufacturer. The fabricator/manufacturer shall must, for the past five (5) years, have been regularly engaged in the manufacture of material or equipment similar in type to that required for this Project. Such material or equipment provided by the manufacturer must have been in satisfactory service for not less than five (5) years.

C. Regulatory Requirements: Comply with applicable requirements of the laws, codes, ordinances and regulations of Federal, State and Municipal authorities.

Obtain necessary approvals from the NYC Building Department.

D. Pre-Installation Meeting: Prior to the start of the Work, meet at the Project site to review material selections, methods and sequence of installation, special details and conditions, standard of workmanship, quality control requirements, job organization, coordination with other trades, and other pertinent topics related to the Work.

1.6 DELIVERY, STORAGE, AND HANDLING

A. Packing, Shipping, Handling, and Unloading: Pack, ship and handle components in accordance with manufacturer's instructions. Protect coiling doors during transit, delivery, storage, and handling to prevent damage, soilage, and deterioration. Cover and keep covered with non-staining protective wrapping. Do not deliver coiling doors until painting, wet work, grinding, and similar operations that could damage, soil, or deteriorate panels have been completed in installation areas.

B. Storage and Protection: Store coiling doors in a dry, well ventilated space, matching the environmental conditions of the finished installation. Cover and keep covered with non-staining protective wrapping.

1.7 WARRANTIES

A. General: Warranties specified in this Article shall not deprive the City of New York of other rights the City of New York may have under other provisions of the Contract Documents and are in addition to and run concurrent with other warranties made by the Contractor under requirements of the Contract Documents.

1. Warranty: Provide a written warranty, directly to the City of New York, for a period of two (2) years, warranting that the coiling doors will be free of defects in material or workmanship and free of operating defects during the warranty period. Warranty shall be signed by the Contractor and the firm awarded the work. Failures, include but are not limited to:

a. Failure of the system to meet performance requirements including but not limited to excessive deflection, racking and warpage.

b. Faulty operations of doors, hardware or automatic equipment.

c. Deterioration of metals, metal finishes and other materials beyond normal weathering.

d. Upon notification of such defect, within the warranty period, make the necessary repairs at the convenience of the City of New York.

PART 2 - PRODUCTS

2.1 MATERIALS

A. Metal Surfaces, General: For fabrication of coiling door metal work which will be exposed to view in the finished work, use only materials which are smooth and free of surface blemishes including pitting, seam marks, roller marks, rolled trade names and roughness. Remove such blemishes by grinding, or by welding and grinding, prior to cleaning, treating, and applying surface

finishes.

B. Stainless Steel

1. ASTM A240; Provide the most suitable austenitic alloy, form and finish required to produce the Work. Provide Type 316 and low carbon 316L for components to be welded, unless otherwise noted.

a. Plate and Sheet: ASTM A480, Stretcher level sheets.

b. Bar Stock and Shapes: ASTM A276.

c. Round, Square and Rectangular Welded Tubing: ASTM A554, Grades MT 316 or MT 316L as standard.

C. Galvanized Carbon Steel Sheets: ASTM A653, hot-dip galvanized with G90 coating (minimum spangle), either commercial quality or structural quality, Grade 33, unless another grade is required for design loads.

D. Structural Steel Shapes, Steel Angles, Plates, Bars, Rods and Other Steel Accessories: ASTM A36, primed painted or hot dip galvanized.

E. Steel Plates: ASTM A283, Grade C, primed.

F. Fasteners: Stainless steel type 300 Series, type and size best suited for its intended use. Where exposed in finished surfaces, use oval-head countersunk Phillips heads with head diameter one screw size larger than the shank diameter. Material and finish to match adjacent surfaces. Where fasteners screw-anchor into material less than 1/8 in. thick, reinforce the interior surface with non-magnetic type stainless steel to receive screw threw threads or provide manufacturer's standard non-corrosive pressed-in splined grommet nuts. Provide fasteners meeting the requirements of IFI standards

G. Anchors and Inserts: Provide anchors and inserts for attachment of items to masonry and concrete. Anchors and inserts shall be non-corrosive and compatible with contiguous metals.

H. Welding Electrodes: Type and alloy recommended by the producer of the metal to be welded and as required for color match, strength and compatibility in the fabricated items.

I. Paints and Coatings

1. Galvanizing: ASTM A123 for galvanizing rolled, pressed and forged steel shapes, plates, bars, strip 1/8 in. thick and heavier and for assembled products.

2. Galvanizing Repair Paint: Zinc rich paint for repairing galvanized surfaces and field welds.

3. Dielectric Separator: Cold applied, asphalt emulsion type complying with ASTM D1187, non-sagging, resistant to severe corrosion conditions; applied in two coats for an overall minimum dry film thickness of 25 mils or heavy coating of epoxy paint in minimum 2.0 mil dry film thickness.

4. Shop Primer for All Ferrous Metal: Compatible with the finish coats of paint (see Section "Painting" for finish coats of paint); shop apply primer to the respective dry film mil thickness specified or as recommended by the manufacturer; Provide one of the following:

a. “Series 10-99” (Tnemec Co. Inc.); 2.0 - 3.5 mils d.f.t.

b. “Carbocoat 115 SG” (Carboline Co.); 2.0 mils d.f.t.

c. “Amercoat 5105” (Ameron Protective Coatings); 2.0 - 3.0 mils d.f.t.

d. Or approved equal.

J. All Other Materials: Manufacturer’s standard for the product specified.

2.2 FINISHES

A. Shop Preparation for Overhead Coiling Door Curtains: Manufacturer’s standard shop preparation primer compatible with finish paint coats.

B. Finish (Exterior): Stainless Steel, finish to match Engineer’s approved sample and adjacent panels.

C. Thermoset Powder Coat Finish (Interior): Provide thermoset powder coat finish on coiling door curtain slats, guides, exposed hoods, brackets and bottom bars. Heat catalyzed organic polyester or urethane powder coat applied over conversion coat providing a smooth, uniform and durable finish complying with the following:

1. Thickness: 2.5 -3.5 mils.

2. Pencil Hardness: 2H or better in accordance with ASTM D3363.

3. Salt Spray Resistance: 1000 hrs or better in accordance with ASTM B117; no blistering.

4. Humidity Resistance: 1000 hrs or better in accordance with ASTM D2247; no blistering.

5. Impact Test: Up to 80 in/lb., in accordance with ASTM D2794; No appearance of cracks.

6. Flexibility: 180 degrees, 1/8 in. conical mandrel when tested in accordance with ASTM D1737.

D. Application: Entire systems for overhead coiling door curtains shall be shop applied (either in manufacturer’s shop or a specialty finishing shop) to exposed surfaces, under suitable conditions as approved by the powder paint manufacturer, so that finished paint surface is smooth, unbroken, free of pinholes, orange peel, sags or runs.

E. Touch-Up: Finish paint shall have the capability to be touched-up in the field without noticeable difference in color, texture, specular gloss or dry film thickness.

F. Color: Color and sheen of interior finish coat for coiling door curtains matching Engineer selected manufacturers color sample on file in Engineer’s office.

2.3 MANUFACTURERS

A. General: Products specified herein establish the basis of design. Equivalent products of McKeon Coiling Steel Door Company, Cornell Iron Works, Wayne Dalton, Kinnear, or approved equal will be considered provided they meet those established standards of the basis of design. Basis of design not intended to imply

a preference for a specific product.

1. Motorized Overhead Insulated Coiling Doors (**OHD-01**): “Stormtite Series 625 Rolling Service Doors” (Overhead Door Corp.) Insulated to R-7 minimum.
    a. Material: Stainless steel
    b. Operation: Electric.
    c. Finish Stainless Steel No 4 Satin.
2. Motorized Vertical Service Counter Shutter (**OHD-02**): “CS3000” (McKeon).
    a. Material: Stainless steel
    b. Operation: Electric.
    c. Finish Stainless Steel No 4 Satin.

2.4 FABRICATION, GENERAL

A. General: Provide each exterior coiling door assembly manufactured as an integral unit, complete with components, accessories and fasteners ready for installation.

B. Forming: Form exposed surfaces free from warp, wave and buckle, with corners square, unless otherwise shown. Form molded members straight and true, with welded joints coped or mitered, well formed, and in true alignment. Dress welded joints on exposed surfaces smooth so they are invisible after finishing and flush with adjacent surfaces. Provide attachment devices and fasteners of type required to secure access doors and frames to contiguous support construction.

C. Reinforcing: Reinforce members and joints with structural shapes and plates in concealed locations, as necessary for adequate strength and rigidity. Provide concealed fastenings unless otherwise shown. Locate necessary exposed fastenings in an orderly pattern, in accordance with reviewed shop drawings. Separate dissimilar metals with dielectric separator to prevent galvanic action. Do not extend coatings onto exposed surfaces

2.5 FABRICATION, SPECIFIC ITEMS

A. Coiling Door Components

1. Curtains, Exterior: Formed of interlocking double flat metal slats, 18 gage sheet front panel (finished to match adjacent metal panels) and a painted 20 gage galvanized sheet back panel and where insulated, insulated with a foamed in place polyurethane insulation, permanently bonded to both interior and exterior slats of curtain, and providing a thermal value complying with performance requirements. Back slat interlocks with front slat panel at both the top and bottom of the slat section. All interior surfaces shall receive a powder coat factory finish.
    a. Provide each slat with end locks designed to engage the guide safety internal angle and so as to withstand specified minimum wind pressure.
2. Bottom Bar: Equip each curtain with bottom bar of two galvanized steel angles with a powder coat factory finish not less than 2 in. by 2

in. by 1/8 in., securely fastened to the bottom of the curtain for reinforcement and an approved continuous safety bottom edge.

3. Motor Operations: Provide for each door; heavy duty motor, “Model RDB” (Overhead) for exterior doors, reduction gears, automatic safety devices, two (2) remote control switches, located where shown, limit switches and emergency chain-hoist operator. Provide all wiring between motors and controls in accordance with the approved wiring diagrams and the applicable requirements of the National Electrical Code. Provide components of electric operator as follows:

   a. Motors: Motor Operator, high starting torque, NEMA type heavy duty, instantly reversible, prewired, with sealed ball bearings lubricated for life, of sufficient capacity to raise and lower the doors at 8 in. to 12 in. per second without overloading the motor, totally enclosed, fan cooled, nonventilated type, fitted with a plugged drain. Motor shall be removable without precluding use of emergency hood chain device or upsetting timing of geared limit switch. Wiring requirement and voltage characteristics of motors shall be coordinated with the building electrical system.

   b. Reduction Gears: Machine-cut gears completely housed and running in oil bath.

   c. Photo-sensor eye: Safety device to detect any obstruction in the opening and return to the fully open position.

   d. Automatic Safety Reversing Device through the safety edge along the bottom rail of the curtain, shall cause the door to stop its descent immediately upon contact with any obstruction in the opening and return to the fully open position. Provide cable reel.

   e. Control Station: In locations as shown on the drawings, provide two (2) momentary-contact, button operated control stations, standard duty, surface-mounted, NEMA Type 1 enclosure, key -operated, clearly labeled “open,” “close” and “stop.” Provide timer function on control station to allow for delayed closing.

   f. Limit Switches: Rotary type with worm and gear driven by timing chain. Cams on gear shall operate micro-type switches allowing vernier adjustment. Geared limit switch shall contain a spare set of contacts.

   g. Emergency Manual Operator: Provide manual chain-hoist operator to allow hand operating of door in the event of a power failure. Provide a safety interlock switch which automatically prevents the electric motor from operating when the emergency chain-hoist operator is in neutral or is engaged.

   h. Magnetic Reversing Starter: Provide internal type with thermal overload protection and reset button.

i. Provide overhead coiling door manufacturer's industrial duty magnetic switch.

4. Brackets: Mounting brackets of square design fabricated of hot rolled 1/4 in. thick steel plate with a powder coat factory finish, designed to house ends of counterbalance system.

5. Guides: Fabricated of a minimum 3 in. by 3 in. structural steel wall angle, a 2 in. by 3 in. steel inner guide angle and a 3 in. by 3 in. steel outer guide angle. Provide guides with neoprene weatherstripping, providing weather sealed coiling door and guide track assembly. Entire assembly shall receive a powder coat factory finish.

6. Hoods: Provided to entirely enclose curtain and counterbalance assemblies. Fabricated of not less than 20 gage galvanized steel sheet with a powder coat factory finish. Top and lower edges bent and reinforced for stiffness. Include an internal neoprene air baffle. Provide closed ends for surface- mounted hoods and fascia for any portion of between-jamb mounting projecting beyond wall face. Provide intermediate support brackets as required to prevent sag. Hoods contained with ceiling space or not exposed to view shall receive a galvanized finish prepared for field painting.

7. Counterbalance Assembly: Counterbalance system consists of adjustable steel helical torsion springs attached to a shaft enclosure in a pipe with required mounting blocks or rings for attachment of curtain. Grease sealed bearings or self lubricating bearings shall be spring barrel fabricated of hot formed structural quality carbon steel seamless pipe of sufficient diameter and wall thickness to carry curtain and door load with a deflection not to exceed 0.03 in. per foot of opening.

8. Locking: Equip doors curtains for locking by padlocks.

B. Hangers, Bracing and Framing: Galvanized steel, designed to support imposed loads. Framing shall be adequate to support enclosures and panels.

C. Panels and Enclosures: Panels and enclosures shall be of galvanized steel with a powder coat factory finish finished to match slats, one piece, removable and shall be free of warp, wave and buckle. Enclosures with weather baffles shall be provided around motors and door mechanism and secured to framing at exterior doors.

D. Painting: Shop paint all surfaces of ferrous metals. Galvanized steel shall be chemically cleaned and bonderized prior to shop painting. Parts inaccessible after installation shall be given an additional field coat of the same paint. Finish paint for insulated motorized exterior overhead coiling door shall be as specified herein and applied totally in the shop by the manufacturer.

E. Nameplates: Attach a permanent, corrosion resistant nameplate showing the manufacturer's name and address, serial number, if any, and type number to each unit in a clearly visible but inconspicuous location. The Engineer will designate the nameplate location on the Shop Drawings.

PART 3 - EXECUTION

3.1 GENERAL

A. Manufacturer’s Instructions: Prepare substrates and install the work of this Section, including components, and accessories in accordance with the manufacturer’s instructions, except where more stringent requirements are shown or specified, and where project conditions require extra precautions or provisions to ensure satisfactory performance of the Work.

3.2 EXAMINATION

A. Verification of Conditions: Examine the areas to receive the Work and the conditions under which the Work would be performed. Contractor shall remedy conditions detrimental to the proper and timely completion of the Work. Do not proceed until unsatisfactory conditions have been corrected. Do not hang doors with an apparent defect.

3.3 PREPARATION

A. Substrate Acceptability: Commencement of installation shall constitute acceptance of substrate conditions by the Installer.

B. Verify measurements and dimensions at the job site and cooperate in the coordination and scheduling of the work of this Section with the work of other trades.

C. Deliver items which are to be built into the work of other sections in time so as not to delay the progress of the Work.

3.4 INSTALLATION

A. Coordination: Coordinate exterior coiling doors with the work of other Sections and provide items to be placed during the installation of other work. Coordinate delivery of such items to the project site. Deliver items which are to be built into the work of other Sections in time so as not to delay the progress of the Work.

B. Perform the Work of this Section, so that the completed installation is in perfect operating condition. Install door and operating equipment complete with necessary hardware, jamb and head mold strips, anchors, inserts, hangers, and equipment supports in accordance with final shop drawings, manufacturer's written instructions, and as specified herein. All items shall be installed within the clearances and space limitations shown, except as follows:

C. Install labeled coiling smoke door assembly to meet requirements of the Insurance Inspection and Rating Bureaus having jurisdiction at the Project site so as to avoid any rate penalty. Correct any installation which would subject the Employer to a rate penalty.

D. Install door and operating equipment complete with necessary hardware, jamb and head mold strips, anchors, hangers, and equipment supports in accordance with final shop drawings, manufacturer's instructions, and as specified herein.

F. Install exterior coiling doors and operating equipment complete with necessary hardware, jamb and head mold strips, anchors, inserts, hangers, and equipment supports in accordance with final shop drawings, manufacturer’s written instructions, and as specified herein. All items shall be installed within the clearances and space limitations shown.

G. Dimensions shown on Drawings are based on an assumed design temperature of 70 deg. F. Fabrication and erection procedures shall take into account the ambient temperature range at the time of the respective operations.

H. Do not erect members which are warped, bowed, deformed or otherwise damaged to such extent as to impair strength or appearance. Remove and replace members damaged in the process of erection.

I. Dielectric Separator: Separate dissimilar metals and metals in contact with concrete or masonry with a dielectric separator.

J. Touch-up marred and abraded surfaces with the specified prime paint after erection in the field. Touch-up galvanized surfaces in accordance with ASTM A780.

K. Upon completion of installation, lubricate and adjust doors to operate easily free from warp, twist or distortion and fitting tightly for entire perimeter.

3.5 TESTING, OPERATION AND INSTRUCTING

A. At the completion of the Work, test exterior coiling doors when activated by operation of smoke or fire detection system. Perform tests in the presence of the City of New York's and the Engineer and demonstrate operation to their complete satisfaction.

B. Instruct maintenance personnel on procedures and schedules related to door operation, servicing, preventive maintenance, and procedures. Provide 4 hours of instruction, scheduled at the convenience of the City of New York's maintenance personnel.

3.6 CLEANING AND PROTECTION

A. Cleaning: Upon completion of installation of exterior coiling doors and adjacent finishes, clean exposed metal surfaces as recommended by the manufacturer.

B. Protection: Protect units during construction period. Replace damaged components as directed by the Engineer.

END OF SECTION

SECTION 08 51 13 – ALUMINUM WINDOWS

PART 1 - GENERAL

1.1 SUMMARY

A. General: Provide aluminum windows in accordance with requirements of the Contract Documents. The Work of this Section includes, but is not limited to the following:

1. Aluminum windows.
2. Hardware for operable units.
3. Glass and glazing for aluminum windows.

B. Related Work Specified Elsewhere

1. Sealants and joint fillers installed at interface of aluminum window assemblies and other building components are specified under Section 07 92 00 “Joint Sealants”.
2. Insulation is specified in Section 07 21 00 “Building Insulation”.
3. Sheet metal flashing and trim is specified in Section 07 62 00 “Sheet Metal Flashing and Trim”.
4. Glass and glazing is specified in Section 08 80 00 "Glazing".

1.2 REFERENCES

A. General: Comply with the applicable provisions of the referenced standards except as modified by governing codes and the Contract Documents. Where a recommendation or suggestion occurs in the referenced standards, such recommendation or suggestion shall be considered mandatory. In the event of conflict between referenced standards, this specification or within themselves, the more stringent standard or requirement shall govern.

1. Aluminium Association (AA)
    a. Aluminum Standards and Data
    b. Designation System for Aluminum Finishes
    c. Engineering Data for Aluminum Structures
2. National Association of Architectural Metal Manufacturers (NAAMM): NAAMM "Metal Finishes Manual".
3. American Architectural Manufacturers Association (AAMA)
    a. ANSI/AAMA/NWWDA 101/I.S.2 "Voluntary Specifications for Aluminum, Vinyl (PVC) and Wood Windows and Sliding Glass Doors".
4. American Welding Society AWS
    a. AWS D1.2 "Structural Welding Code - Aluminum".

1.3 SYSTEM DESCRIPTION

A. Performance Requirements

1. General: Except as otherwise indicated, comply with applicable requirements including structural loading, air infiltration, water resistance, thermal and condensation resistance and fabrication specifications specified in ANSI/AAMA 101 classification AW.

2. Wind Loading: Design, fabricate and install aluminum windows so that the total, installed, glazed unit will withstand project, ASCE-7, and New York City Building Code required inward and outward pressure.

3. Building Movement: Design, fabricate and install aluminum windows to withstand building movements including loading deflections, shrinkage, creep, seismic and similar movements as indicated on project structural contract documents.

4. Water Drainage: Make provisions at sill to drain water and condensation to exterior face of the frames.

5. Temperature Requirements: Design, fabricate and install aluminum window component parts to provide for expansion and contraction of the window over an ambient exterior temperature range and exterior metal surface temperature of –10 deg. F. (–23 deg. C.) through +180 deg. F.(82 deg. C.); an interior temperature range of +55 deg. F. (13 deg. C.) to 100 deg. F. (38 deg. C.) without buckling, sealed joint failure, glass breakage, undue stress on members or anchors, and other detrimental effects.

6. Thermal Transmittance: Provide window units which have been tested in accordance with ASTM C1363 utilizing a guarded hot box and resulting in a "U" value not to exceed 0.69.

7. Air and Water Control: Provide tight joints and effectively seal windows against water leakage and air infiltration. Water leakage is defined as the appearance of uncontrolled water, other than condensation, on inboard part of window or panel, either during testing or under actual weather conditions. Uncontrolled water is defined as leakage that is not contained and\or drained away in a manner as to cause no damage to the wall or adjacent construction of finishes. When tested in accordance with ASTM E283, at 6.24 psf test pressure, the air infiltration shall not exceed 0.06 cfm/ft.^{2} of window area for fixed portions of window and 0.10 cfm/min.per linear ft. 12in. of crack length for operable portions of window.

8. Unacceptable Conditions: Vibration harmonics, wind whistles, noise or vibration created by thermal movement, structural movement, or wind; thermal movement transferred to building structure; loosening, weakening or failure of fasteners, attachments or other components.

9. Design Modifications: Make design modifications of work shown only as may be necessary to meet performance requirements and coordinate the work. Variations in details and materials which do not adversely affect appearance, durability or strength shall be submitted to the Engineer for review.

1.4 SUBMITTALS

A. Product Data: Submit for Engineer's action. Furnish a material list with technical data documenting the location and primary function, quality, and performance of each material component or system to be used in the Work. In addition, submit a statement that each product to be furnished is recommended for the application shown.

B. Shop Drawings: Submit for Engineer's action. Provide shop drawings for the fabrication and installation of the aluminum windows work. Prepare details at not less than 3 in. = 1 ft. (1:5) minimum scale. Shop drawings shall bear seal of a Professional Engineer licensed in the State of New York. Include the following:

1. Show typical details of conditions for every member, joint, anchorage and glazing system. Show details of support system, method of attachment to building structure, anchorage details and interface with adjacent work.

2. Show component locations and intersection details, method of isolating dissimilar materials, provisions for expansion and contraction, method of drainage of the system including gutters, weeps and flashings including method of drainage of condensation which might form external to the vapor barrier and reglazing sequence both in the factory and remedial for the field.

3. Setting Drawings: Submit for Engineer's information, setting drawings and templates for the location of aluminum window items that are to be embedded in or anchored to concrete or masonry.

C. Glazing Schedule: Submit for Engineer's information, a glazing schedule utilizing the same designations shown on Drawings for glazed windows listing glass types and thicknesses for each size opening and location.

D. Samples: Submit for Engineer's action. Label samples to indicate product, characteristics, and location in the Work. Samples will be reviewed for color and appearance only. Furnish sufficient samples to establish the full range of colors and textures for materials exposed in the finished work. Compliance with other requirements is the responsibility of the Contractor.

1. Submit 3 sets of samples for each metal type, metal finish and color required. Submit sample finishes on 12 in. lengths of metal having the specified alloy, temper, pretreatment and thickness of metal required for the work, showing the maximum range or variation in color and shade.

2. Submit one sample corner of window unit, representative of fabrication techniques and workmanship of the final products.

3. Submit one sample of each type of window hardware specified.

E. Engineering Services: Submit for Engineer's action. Provide calculations to verify materials provided meet specified performance requirements. Calculations shall bear the seal of a Professional Engineer registered in the State of New York. Submit the following:

1. Engineering calculations to show that maximum deflections do not

exceed specified performance requirements under full design loading.

2. Structural calculations for frames, panels, connections and window anchorage system.

3. Submit calculations of expansion and contraction.

F. Quality Control Submittals: Submit for Engineer's information.

1. Test Reports

a. Up-to-date (within 5 years), certified test reports from an independent testing laboratory stating that similar sized aluminum windows have been tested and meet the performance for structural requirements and for air and water infiltration and comply with references.

b. Up- to- date (within 5 years) certified test reports from an independent testing laboratory stating that similar sized aluminum windows have been tested and meet the performance requirements for condensation and thermal resistance and comply with references.

2. Copies of the following laboratory test reports:

1) ASTM B137 - Anodic Coating Weight

2) ASTM B244 - Anodic Coating Thickness

3) ASTM B136 - Stain Test

3. Certificates

a. Document Review: Before commencing work, submit a written statement signed by the Contractor and the Applicator certifying that the Contract Documents, shop drawings and product data have been reviewed with material manufacturers' qualified technical representatives and that they agree the selected materials are proper, compatible with contiguous materials and adequate for the application shown.

b. Manufacturer's and fabricator's certification indicating that anodic coating complies with the Contract Documents.

G. Closeout Submittals: Submit for City of New York's documentation.

1. Warranties: Special warranties specified.

2. Maintenance Data: Two (2) copies of an assembled and bound maintenance manual, describing the materials, devices, and procedures to be followed in cleaning and maintaining the aluminum windows. Include manufacturer's brochures describing the actual materials used in the work, including metal alloys, finishes, glass, gaskets and other major components.

1.5 QUALITY ASSURANCE

A. Qualified Installer: The entity performing the work of this section must, within the last five (5) consecutive years prior to the bid opening have successfully completed in a timely fashion at least three (3) projects similar in scope, size

and type to the required work.

B. Source Limitations: Obtain windows from one source of a single manufacturer. The fabricator/manufacturer shall must, for the past five (5) years, have been regularly engaged in the manufacture of material or equipment similar in type to that required for this Project. Such material or equipment provided by the manufacturer must have been in satisfactory service for not less than five (5) years.

C. Engineering Services: Engage the services of a qualified Professional Engineer who is licensed to practice in the State of New York and who is experienced in providing engineering services of the kind indicated to prepare or supervise the preparation of data for the aluminum windows, including drawings, testing program development, test-result interpretation, and comprehensive engineering analysis that show the systems' compliance with the specified requirements. Engineering services are defined as those performed for installations of systems that are similar to those indicated for this Project in material, design, and extent.

D. Intended Aesthetic Effects: Do not modify intended aesthetic effects, as judged solely by Engineer, except with Engineer's approval and only to the extent needed to comply with performance requirements. Where modifications are proposed, submit comprehensive explanatory data to Engineer for review.

E. Regulatory Requirements: Comply with applicable requirements of the laws, codes, ordinances and regulations of Federal, State and Municipal authorities. Obtain necessary approvals from the NYC Building Department.

F. Pre-Construction Meeting: Prior to the start of the Work, meet at the Project site to review material selections, methods and sequence of installation, special details and conditions, standard of workmanship, quality control requirements, job organization, coordination with other trades, and other pertinent topics related to the Work.

1.6 DELIVERY, STORAGE AND HANDLING

A. Delivery of Fabricated Units: Deliver fabricated window units and component parts to project site completely identified in accordance with erection diagrams. Store in accordance with manufacturer's instructions, above grade on dunnage, properly protected from the weather and construction activities.

B. Protective Coatings or Coverings: Temporary coating and coverings may be furnished at manufacturer’s or Contractor’s option to protect the Work during shipment and construction. Such protection shall avoid development of non-uniformity in finishes, shall not impart a residue which would adversely affect the adhesion of sealants, nor cause other deleterious effects in the Work. Temporarily remove protection when requested by Engineer for inspection of finishes, and completely remove protection when no longer required.

C. Material Delivery: Deliver materials to Project site in manufacturers' unopened containers, fully identified with trade name, color, size, hardness, type, class, and grade. Store each item in accordance with manufacturer's instructions. Deliver, store and handle glass in accordance with manufacturer's recommendations; protected from weather, staining and damage. During

storage and handling of glass provide cushions at edges to prevent impact damage. Protect glass from scratches and abrasion.

1.7 PROJECT/SITE CONDITIONS

A. Field Glazing: Do not perform glazing when temperature is below 40 deg. F., unless the manufacturer of the glazing materials specifically recommends application of his materials at lower temperatures. If job progress or other conditions require glazing work when temperatures are below 40 deg. F. (or below the minimum temperature recommended by the manufacturer), consult the manufacturer and establish the minimum provisions required to ensure satisfactory work. Record in writing to the manufacturer, with copy to the Engineer, the conditions under which glazing work was performed and the provisions made to ensure satisfactory work.

B. Bulk Compounds: Do not proceed with installation of bulk compounds during inclement weather unless requirements and manufacturer's instructions can be complied with and unless the work can proceed in accordance with the agreements of the pre-installation meeting. Do not proceed with the installation of sealants under extreme temperature conditions which would cause joint openings to be at either maximum or minimum width or when extreme temperatures or heavy wind loads are forecast during the period required for initial or nominal cure of sealants. Whenever possible, schedule the installation and cure of sealants during periods of mean temperatures (nominal joint width shown) so that subsequent stresses upon the cured sealants will be minimized.

1.8 WARRANTIES

A. Warranties specified in this Article shall not deprive the City of New York of other rights the City of New York may have under other provisions of the Contract Documents and are in addition to and run concurrent with other warranties made by the Contractor under requirements of the Contract Documents.

1. Special Warranty, Aluminum Windows: Submit for City of New York’s documentation. Provide a written warranty for a period of ten (10) years. Repair or replace window work and correct leaks or other defects in material or workmanship during the warranty period. Warranty shall be signed by the manufacturer and the single firm awarded the window work. Upon notification of defects, within the warranty period, make the necessary repairs or replacements at the convenience of the City of New York. Defects are defined to include, `but not limited to the following:

   a. Failure of the system to meet performance requirements including but not limited to excessive deflection, racking, warpage, excessive water leakage or air infiltration.

   b. Failure of operational parts to function normally.

   c. Deterioration, fading, excessive non-uniformity, pitting, cracking, peeling, crazing or discoloration of finishes and other materials beyond normal weathering.

d. Deflection exceeding specified limits.

e. Thermal stresses transferred to the building structure.

f. Framing members transferring stresses, including those caused by thermal and structural movement, to glazing.

g. Noise or vibration created by thermal and structural movement and wind.

h. Loosening or weakening of fasteners, attachments, and other components

2. Warranty, Anodized Coatings: Submit for City of New York's documentation. Provide a written Warranty, for a period of five (5) years warranting that the anodized aluminum will not develop excessive fading or excessive non- uniformity of color or shade, and will not crack, peel, pit, or corrode; within limits defined as follows:

a. "Excessive fading": means a change in appearance which is perceptible and objectionable as determined by the Engineer when viewed visually in comparison with the original color range standards.

b. "Excessive non-uniformity": means non-uniform fading during the period of the Warranty to the extent that adjacent panels have a color difference greater than the original acceptable color range.

c. "Will not crack, peel, pit or corrode": means there shall be no cracking, peeling, pitting or other type of corrosion discernible from a distance of 10 ft. (3m), resulting from the natural elements in the atmosphere.

d. Upon notification of defects, within the warranty period, make the necessary replacements at the convenience of the City of New York.

PART 2 - PRODUCTS

2.1 MANUFACTURERS

A. General: Products specified herein establish the basis of design. Equivalent products of Graham Windows, EFCO, Wausau Windows, or approved equal will be considered provided they meet those established by basis of design. Basis of design not intended to imply a preference for a specific product.

1. Operable In-Swing Hopper Windows (**WND-01**):

a. Manufacturer: YKK

b. Model: YOW 225 TU

c. Glass: **GL-01**

d. Finish: Clear Sealed Clear Anodized

2. Fixed Windows (**WND-02**):

a. Manufacturer: YKK

b. Model: YOW 225 TU

c. Glass: **GL-01**

d. Finish: Clear Sealed Clear Anodized

3. Operable Double Hung Windows (**WND-03**):

a. Manufacturer: YKK

b. Model: YOW 225 TU

c. Glass: **GL-01**

d. Finish: Clear Sealed Clear Anodized

4. Service Window (**WND-04**):

a. Manufacturer: Nissen & Company

b. Model: BP

c. Glass: **GL-02**

d. Operation: Manual with interior locking device.

e. Finish: Clear Anodized

2.2 MATERIALS

A. Aluminum Extrusions: Shapes as shown and as required to fulfill performance requirements, but not less than 1/8 in. thick, unless otherwise shown. Suitable alloy and proper temper for extruding and fabricating with adequate structural characteristics, and suitable controlled alloy and temper as recommended by aluminum manufacturer to provide required color and color matching.

B. Aluminum Sheets and Plates: Sizes and minimum gauge as shown and as required to fulfill performance requirements. Suitable alloy and proper temper for forming and fabricating with adequate structural characteristics and suitable for finishing as specified.

2.3 FASTENERS, ANCHORAGE AND REINFORCING

A. Anchor Assemblies: 3-way adjustable anchors that accommodate fabrication and installation tolerances in material and finish compatible with adjoining materials and recommended by manufacturer/fabricator.

1. Concrete and Masonry Inserts: Hot-dip galvanized cast-iron, malleable-iron, or steel inserts complying with ASTM A23 or ASTM A153 requirements. Provide bolts, washers and shims as required, hot dip galvanized, ASTM A153, Class A.

2. Steel Anchorage: Anchor assemblies secured to structural steel framing shall be fabricated in accordance with the criteria governing structural steel and where exposed, architecturally exposed structural steel.

B. Steel Angles, Plates, Anchors, Clips, Bars, Rods and other Steel Accessories Required to Join or Reinforce Assembly of Aluminum Components: ASTM A36 and ASTM A283, galvanized or, if galvanized is not compatible with alloy of component parts, shop painted with primer specified herein after cutting to size. Galvanize ferrous metals embedded in concrete or masonry unless

otherwise shown or specified.

C. Aluminum Angles, Plates, Bars, and other Aluminum Members Required to Join or Reinforce Assembly of Aluminum Components: Alloys recommended by manufacturer or fabricator to develop required strength of assembly.

D. Fasteners and Accessories: Manufacturer's standard non-corrosive fasteners and accessories that are compatible with materials used in the window framing system and with exposed portions that match finish of the windows. Where movement should be expected, provide 3-way adjustable anchors that accommodate fabrication and installation tolerances and slip-joint linings of sheets, pads, shims, or washers of fluorocarbon resin or a similar material recommended by the manufacturer.

1. Items For Bolting Aluminum Extrusions And Connecting Members: Stainless steel complying with ASTM A193, Series 300; unless otherwise recommended by the window manufacturer.

2. Where fasteners anchor into aluminum less than 1/8 in. thick, provide non-corrosive pressed-in splined grommet nuts or other type reinforcement to receive fastener threads.

2.4 GLASS SCHEDULE

A. General: The following glass schedule contains all glass types scheduled for the project windows and exterior openings. Refer to Section 08 80 00 "Glazing" and paragraph “Related Work Specified Elsewhere” for additional information locations and additional requirements.

B. Schedule:

1. Glass **GL-01**: Clear insulating glass unit.

2. Glass **GL-02**: Clear laminated glass.

2.5 MISCELLANEOUS MATERIALS AND ACCESSORIES

A. Sealants: As specified in Section 07 92 00 “Joint Sealants”.

B. Thermal Separators: Polyvinylchloride, 50 Shore A durometer hardness +/- 5 or poured homogeneous structural polyurethane of a cross sectional profile, interlocking with aluminum extrusions (minimum 3/8 in. separation) forming an integral structural unit.

C. Weatherstripping: AAMA 701 & AAMA 702 “Voluntary Specifications for Pile Weatherstripping and Replaceable Fenestration Weatherseals”. Provide compressible, removable and replaceable type weatherstripping formed from neoprene or EPDM complying with ASTM D2000 or molded expanded EPDM or neoprene complying with ASTM C509, grade as selected by the manufacturer.

D. Stainless Steel Flashing: ASTM A666, Type 304, dead soft fully annealed except where harder temper required for forming or performance; 0.015 in. (28 gage) thick unless otherwise shown, finish No. 2D. Provide 60 - 40 tin/lead solder, with acid-chloride type flux, except use rosin flux over tinned surfaces in accordance with ASTM B32.

E. Weep Baffles: PVC coated, reticulated, flexible open cell reticulated

polyurethane foam; 30-40 pores per 1 in. or as recommended by the fabricator. PVC coating shall have a bacteriostat additive added to the formulation.

2.6 OPERABLE WINDOW HARDWARE

A. Hardware for Operable Windows: AAMA Series 900 for hardware appropriate to each specified type window. Provide manufacturer's standard or custom design for operation specified; fabricated of stainless steel complying with ASTM A167 or ASTM A666 and finished to match frame of window.

1. Provide the following hardware for each window noted as "Operable".

2.7 PAINTS AND COATINGS

A. Rust Inhibitive Primer for Ferrous Metals Not Galvanized: Compatible with finish coats of paint (if any) of the respective dry film mil thickness specified; One of the following:

1. "Hi-Build Epoxoline II Series N69/N69F" (Tnemec Co. Inc.); 4.0 - 6.0 mils d.f.t.

2. "Carboguard 890Series" (Carboline Co.); 4.0 - 6.0 mils d.f.t.

3. "Amercoat 383 H" (Ameron Protective Coatings); 4.0 - 6.0 mils d.f.t.

4. Or approved equal.

B. Galvanizing Repair Paint: Zinc rich paint for repairing galvanized surfaces and field welds in compliance with ASTM A780. Thickness of applied galvanizing repair paint shall be not less than coating thickness required by ASTM A123 or ASTM A153 as applicable.

C. Dielectric Separator: Cold applied, asphalt emulsion type complying with ASTM D1187, non-sagging, resistant to severe corrosion conditions; applied in two coats for an overall minimum dry film thickness of 25 mils or heavy coating of epoxy paint in minimum 2.0 mil dry film thickness.

2.8 FABRICATION

A. General: Provide manufacturer's standard fabrication, accessories and finish complying with paragraphs "References" and "Performance Requirements". Units shall be reglazable without dismantling of sash framing. Provide a complete system of anchorage for glazed aluminum window units. Allow for erection tolerances and provide for movements of window units and enframement due to thermal expansion. Fabricate aluminum windows at the manufacturer's shop to the fullest extent possible and before applying finishes.

B. Welding, Cutting, Drilling, Mitering And Fitting Of Joints: Complete the welding, cutting, drilling, mitering and fitting of joints prior to finishing. Weld with electrodes and by methods recommended by the metals manufacturer in accordance with applicable recommendations of the AWS. Use only methods which will avoid distortion or discoloration of exposed faces. Grind weld areas smooth before proceeding with other treatment.

C. Fastenings: Conceal fastenings unless otherwise shown or specified. Fit and

assemble work in the shop insofar as practicable. Carefully fit and match work with continuity of line and design, using rigidly secured joints with hairline contact, mitered corners, unless otherwise shown. Reinforce members and joints with steel or aluminum plates, bars, rods or angles for rigidity and strength as needed to fulfill performance requirements. Use concealed stainless steel fasteners for jointing which cannot be welded.

D. Panels and Sills: Fabricate aluminum panels and sills utilizing 3/16 in. (min. thickness) aluminum plate. Finish sills and panels to match finish of aluminum frames. Reinforce panels in concealed locations as required to meet specified performance criteria and to resist anchorage stresses. Fasteners or anchorage shall not be exposed to view on finished face of panel or sill.

E. Weepholes: Provide weepholes and internal water passages in the glazing recess as recommended by the glass manufacturer to conduct infiltrating water to the exterior. Provide weep baffles secured to inside of frame behind weepholes to prevent water migration.

F. Thermal Separator: Fabricate aluminum window units with an integrally concealed low conductance thermal separator, located between exterior metal material and metal material exposed on the interior in a manner that eliminates direct metal-to- metal contact.

G. Subframes: Provide subframes with anchors for window units where shown of profile and dimensions indicated fabricated from not less than 1/8 in. (3mm) thick extruded aluminum. Miter or cope corners and weld and dress joint smooth with concealed mechanical joint fasteners. Finish to match finish specified for frames.

2.9 FINISHES

A. Aluminum Finishes: Remove die markings prior to finishing operations. Perform this work in addition to the finish specified. Scratches, abrasions, dents and similar defects are unacceptable.

1. Anodized Finish

a. Fixed and Operable Windows: Natural Anodized: AA-M12C22A41, Class I Architectural: clear film thicker than 0.7 mils with clear electro- deposition organic coat complying with AAMA 611 and AAMA 612.

b. Service Window: Natural Anodized: AA-M12C22A41, Class I Architectural: clear film thicker than 0.7 mils with clear coat complying with AAMA 611.

c. Sealing: Anodized finishes shall be fully sealed by the manufacturer or processor according to procedures recommended by the licensor of the process.

2.10 SHOP PAINTING FOR FERROUS METAL

A. General: Shop paint ferrous metal work, except members or portions of members to be embedded in concrete or masonry, surfaces and edges to be field welded, unless otherwise specified.

B. Removal Of Oil, Grease And Similar Contaminants: Remove oil, grease and

similar contaminants in accordance with SSPC SP-1 "Solvent Cleaning", prior to any additional surface preparation specified.

C. Metal Surfaces: Clean and prepare metal surfaces before applying shop coat. Remove rust and mill scale in accordance with SSPC SP-3 "Power Tool Cleaning".

D. Application of Primer: Immediately after surface preparation, apply primer in accordance with manufacturer's instructions. Use painting methods which will result in full coverage and dry film thickness specified.

E. Procedures for Primer and Finish Paint: Apply one shop coat of primer to fabricated metal items, except apply 2 coats of primer to surfaces inaccessible after assembly or erection. Use thinners only as specified by the coating manufacturer. The entire coating system shall be as supplied by a single manufacturer.

PART 3 – EXECUTION

3.1 GENERAL

A. Manufacturer's Instructions: Prepare substrates and install the work of this Section, including components, and accessories in accordance with the manufacturer's instructions, except where more stringent requirements are shown or specified, and where project conditions require extra precautions or provisions to ensure satisfactory performance of the Work

3.2 EXAMINATION

A. Verification of Conditions: Examine the areas to receive the Work and the conditions under which the Work would be performed. Check carefully the provisions for anchorage and adjustment, allowances for expansion and contraction, and conditions of preset flashings and flashing connections. Contractor shall remedy conditions detrimental to the proper and timely completion of the Work. Do not proceed until unsatisfactory conditions have been corrected.

B. Verify dimensions of openings by field measurements so that aluminum windows and related items will be accurately designed, fabricated and fitted to the structure. Tolerances for supporting structure are specified in other Sections. Furnish anchor bolts and inserts for setting in concrete formwork or masonry indicated to support aluminum windows.

3.3 COORDINATION AND SCHEDULING

A. Sequence of Installation: Schedule installation of the aluminum windows in sequence with related elements of the Work specified in other Sections to ensure that window assemblies, including flashing, trim, and joint sealers, are protected against damage from effects of weather, age, corrosion, and other causes.

B. Coordination: Coordinate aluminum windows and related metal work with the work of other Sections and provide items to be placed during the installation of other work. Place such items, including connectors and anchors, accurately

in relation to the final location of windows

3.4 PREPARATION

A. Substrate Acceptability: Commencement of installation shall constitute acceptance of substrate conditions by the Installer.

3.5 INSTALLATION

A. General: Install aluminum windows supported on shims and secured in place by bolting to clip angles and similar supports anchored to supporting structure. Use only the types of equipment, wedges, spacers, shims and other items during installation which will not corrode nor stain or mar the finish surfaces.

B. Assumed Design Temperature: Dimensions shown on Drawings are based on an assumed design temperature of 70 deg. F. Fabrication and erection procedures shall take into account the ambient temperature range at the time of the respective operations.

C. Installation: Install aluminum windows plumb and true in alignment with established lines and grades without warp or rack of framing members. Anchor securely in place. Install components to drain water passing joints and condensation and moisture occurring or migrating within the assembly to the exterior. Lubricate operating hardware and other moving parts. Do not erect members which are warped, bowed, deformed or otherwise damaged to such extent as to impair strength or appearance. Remove and replace members damaged in the process of erection. Provide separators and isolators to prevent corrosion, electrolytic deterioration, and freeze-up of moving joints. Separate dissimilar metals with two coats of dielectric separator. Do not extend coating onto exposed or finished surfaces. Prime paint concealed ferrous metal with specified metal primer. Seal joints in a concealed manner, unless exposed sealant is shown. Comply with requirements of Section 07 92 00 "Joint Sealants". Install and demonstrate that the completed operable units are installed in a condition acceptable to the City of New York and Engineer.

D. Cutting and Trimming: Cut and trim component parts during erection only with the approval of the manufacturer or fabricator and in accordance with his recommendations. Do not cut through reinforcing members. Restore finish completely to protect material and remove evidence of cutting and trimming. Remove and replace members where cutting and trimming has impaired strength or appearance.

E. Welding and Soldering: Weld with electrodes and by methods recommended and in accordance with appropriate recommendations of the AWS. Use only methods which will avoid distortion or discoloration of exposed faces. Grind exposed welds smooth, using only clean wheels and compounds which are free of iron or iron compounds. Restore finish of component parts after welding and grinding. Solder only to fill or seal joints (not to form structural joints). Grind smooth and restore finish. Paint clip angles and other ferrous metal parts not exposed to view with specified rust inhibitive paint. Seal joints in a concealed manner.

F. Erection Tolerances: Erect aluminum windows within the following tolerances:

1. Variation From Plumb Or Angle Shown: 1/8 in. maximum variation in

10 ft. height or 10 ft. run, non-cumulative.

2. Variation From Level Or Slopes Shown: 1/8 in. maximum variation in 10 ft. height or 10 ft. run, non-cumulative.

3. Offsets: Offsets in end-to-end or edge-to-edge alignment of consecutive members:

a. 1/16 in. maximum offset in any alignment.

3.6 FIELD QUALITY CONTROL FOR EXTERIOR WINDOWS

A. Contractor’s Quality Control Responsibilities: Contractor is solely responsible for quality control of the Work.

1. Water Penetration Test: After completion of the installation and nominal curing of sealants, and glazing compounds, and before installation of interior trim members, finishes and heating unit covers, test exterior windows for water leaks in accordance with AAMA Standard 501.2 "Specifications for Field Check of Metal Curtain Walls for Water Leakage”. Provide powered scaffold, hose, radios, water supply and manpower to perform scheduled tests. Conduct tests in the presence of the Engineer. Correct deficiencies observed as a result of this test.

a. Test Locations: Test areas shall be at location(s) indicated by Engineer. Perform tests after completion of the installation and nominal curing of sealants, and before installation of interior trim members and heating unit covers. Conduct one successful test for each location.

3.7 CITY OF NEW YORK’S MONITORING ACTIVITIES

A. City of New York’s Testing Agency: A testing agency, engaged at the City of New York’s expense, will perform the following activities to monitor the Contractor’s Quality Control Program. The monitoring activities do not relieve the Contractor of responsibilities under the Contract.

B. Contractor's Assistance to the City of New York's Testing Agency: Furnish the City of New York's Testing Agency with access to the Work, materials and facilities as required by the Agency. Provide adequate notice of construction activities to allow timely inspections and observation of Contractor tests, and be available for pre- installation meetings. Furnish the City of New York's Testing Agency with on-site office facilities.

C. City of New York's Testing and Inspection Program: Testing and inspection will be performed by an independent testing agency(s) retained by the City of New York as specified herein.

1. The City of New York’s shall retain a Quality Control Agent to perform testing and inspection services for the aluminum window work required for the Project including but not limited to inspection and testing of work at the project site and, if work is performed off site, inspection and testing of work in fabrication plants.

2. The City of New York’s Quality Control Agent shall perform full-time inspection and testing of the aluminum window work during

construction at timely occurrences to satisfy the Engineer and the quality control established for the Project by the Contract Documents.

3. The City of New York's independent testing agency work includes but is not limited to the following:

   a. Inspection Compliance: Verification of the compliance of; or the deficiencies of the following:

      1) Aluminum Window Components: Verification that the framing components are properly sized and aligned, are without missing or mislocated anchoring provisions and are without structural defects. Verification that primed and painted components are provided with the specified materials.

      2) Connections and Anchors: Verification that anchors are properly placed, welded or bolted. Verification that correct anchoring and/or materials are used in lieu of others where there are field changes. Inspection of welding and bolting where connections are stressed to 50% or more of allowable values. Verification of the calibration of wrenches, review of bolting procedures and inspection of joint surfaces prior to bolting for bolted connections related to the aluminum windows. Verification of welder's license, qualifications and welding procedures for welds related to the aluminum windows. Verification of proper welding or bolting of reset connections.

      3) Joints and Sealants: Verification that movement joints have been provided, and verification that joints are free from obstructions. Confirmation that accepted sealant materials are provided. Verification that sealant joints are properly sealed, and that materials are of sufficient elongation for movement anticipated. The recording of any unanticipated movement or displacement beyond performance criteria.

      4) Glass and Glazing: Verification that the aluminum window glass is not defective and that the glazing gaskets meet specifications. Verification that the location and size of setting and edge blocks are suitable and meet specifications

      5) Flashings and Drainage: Verification that flashings are the proper materials, are properly installed and that end dams are sealed. Verification that weeps and tubes are installed and are functional

   b. Observation Compliance of Aluminum Window Subcontractor's Testing Program

      1) Field Tests: Observation, as the City of New York's representative, of field testing of aluminum window

assembly, for the required Field Water Test: AAMA 501.2 as specified herein.

3.8 ADJUSTING

A. Adjustment: Adjust operating sash of operable aluminum windows to provide an even, tight fit at contact points and weather stripping for smooth operation and weather tight closure. Adjust operable aluminum windows to operate smoothly with hardware and operators functioning properly. Lubricate hardware and other moving parts. Remove and replace any defective parts.

B. Touch-Up Painting: Field paint marred or abraded shop paint and welds after cleaning these areas. Separate dissimilar metals and metals in contact with concrete or masonry with dielectric separator or gaskets. Do not extend coatings onto exposed surfaces.

1. Touch-Up to Finish System: Touch up damaged, scratched, marred or abraded exposed finishes utilizing approved air dried fluoropolymer resinous paint system in matching colors and sheen. Obtain Engineer's approval of finished touch-up.

3.9 CLEANING

A. Maintenance of Installation: Maintain the aluminum windows throughout the construction period in a clean and properly protected condition so that it will not be damaged at the time of acceptance by the City of New York. Cleaning and protective methods shall be carefully selected, applied and maintained so that finishes will not become uneven or otherwise impaired as a result of unequal exposure to light and weathering. Remove deleterious materials from surfaces of aluminum and glass immediately. Protect glass from breakage immediately upon installation. Use streamers or ribbons suitably attached to framing and held free of the glass. Do not apply warning markings directly to the glass.

B. Cleaning: Upon completion of installation, wash exposed surfaces to leave clean and free from blemishes. Clean excess sealant or compound from glass and framing members immediately after application using solvents or cleaners recommended by manufacturers.

3.10 PROTECTION

A. Protection: Protect the Work during erection and construction to avoid non-uniformity of appearance or other defects in the Work. When requested for inspection of finishes, remove and replace temporary protection. Remove protection when no longer required.

END OF SECTION

SECTION 08 71 00 – FINISH HARDWARE

PART 1 - GENERAL

1.1 GENERAL REQUIREMENTS

A. Work of this Section, as shown or specified, shall be in accordance with the Contract Documents.

1.2 WORK INCLUDED

A. Work of this Section includes all labor, materials, equipment and services necessary to furnish all the finish hardware as shown on the drawings and specified herein.

1.3 RELATED WORK

A. Hollow Metal Doors and Frames - Section 08 33 00

B. Overhead Coiling Doors - Section 08 33 23

C. Paints and Coatings - Section 09 90 00

D. Fabricated Concrete Buildings - Section 13 34 70

1.4 QUALITY ASSURANCE

A. Hardware shall be suitable and adapted for its required use and shall fit its designated location. Should any hardware as shown, specified or required fail to meet the intended requirements or require modification to suit or fit the designated location, determine the correction or modification necessary and notify the Engineer in ample time to avoid delay in the manufacture and delivery of hardware.

B. For fire rated openings provide hardware complying with NFPA Standard No. 80 requirements of the NYC Building Department.

C. Barrier Free Requirements: Local laws complying with the American Disabilities Act shall apply.

1. Fire doors shall have the minimum opening force allowable by the NYC Building Department. The force for pushing or pulling open doors other than fire doors shall be as follows:

   a. Interior hinged door: 5.0 pounds (22.2 N) maximum

   b. Interior sliding or folding doors: 5.0 pounds (22.2 N) maximum

2. These forces do not apply to the force required to retract latch bolts or disengage other devices that hold the door in a closed position.

D. Hardware Supplier Qualifications: The Hardware Supplier shall have been regularly engaged in the sale and distribution of Finish Hardware for projects of comparable scope and size for a minimum of five (5) years. The Hardware Supplier shall have an Architectural Hardware Consultant (AHC) of the Door and Hardware Institute on staff who will be responsible for overseeing the scheduling, detailing, ordering, and coordinating of Finish Hardware, and shall be available for consultation with the Engineer, at no additional cost to the City of New York, during progress of construction. The Hardware Supplier shall be a direct factory

authorized distributor for all Finish Hardware items being furnished in accordance with this Specification.

1.5 SUBMITTALS

A. Before any finish hardware is ordered or purchased, submit catalog cuts and a complete Hardware Schedule of Finish Hardware. Each item listed in the Hardware Schedule shall be identifiable with respect to manufacture, brand, catalog number, material, and finish.

1. Schedule of Finish Hardware shall be submitted in the Vertical Schedule Format per Door and Hardware Institute Sequence & Format for the Hardware Schedule (1996).

B. Where submission differs from Schedule given herein, use different color or other means of identification to bring change to the attention of the Engineer.

C. Samples: Submit samples as requested by Engineer. Do not proceed with installation until samples have been approved. Approved samples may be installed in the work after substantial completion of work. Samples shall include one (1) each of the following samples:

1. Hinge (Each Type)
2. Intermediate Pivot
3. Surface Closer
4. Lockset (Entrance Function)
5. Floor Stop
6. Push-Pull Plates
7. Push-Pull Bars
8. Finish Sample of all other hardware, as requested by the Engineer.

1.6 PRODUCT HANDLING

A. Pack finish hardware in approved manufacturer's containers, complete with trimmings, bolts, screws, washers, etc., as required for application and securement. Each container shall bear a suitable label which will state the quantity and kind of contents of said container, as well as identifying marks relating to the approved Hardware Schedule and its location in the project.

B. Levers, handles, pulls and any other items of finish hardware with easily damaged finishes shall be individually wrapped before placing in containers and with sufficient sheet cloth or cotton-backed paper which shall be adequately tied with heavy strings; all as necessary to protect the finishes.

C. Finish hardware shall be delivered, as directed, to the building site or the factories of the various fabricators of metal work to which such hardware is to be applied. Deliver hardware in the order required and in ample time to permit application at the building, or fabricators' shops, within the time required for the completion of the building.

1.7 JOB CONDITIONS

A. Field Service: The hardware supplier shall assign a competent representative, acceptable to the Engineer, to be at the jobsite each time a major shipment of

finish hardware is received. Such representative shall assist in "checking in" these shipments and shall secure a receipt covering the contents of each shipment. In addition, such representative shall be available for immediate call to the jobsite when, in the opinion of the Engineer, the representative's presence is necessary.

B. Templates: Promptly following approval of the Hardware Schedule by the Engineer, furnish and deliver template information, to the fabricators, of items to which finish hardware is to be applied.

1. Such deliveries shall be made in ample time to avoid delays in such work of said fabricators. Provide drawings, schedules and detailed information to other trades as necessary for them to accommodate and prepare their work to receive the finish hardware.

C. Cooperation and Coordination

1. Cooperate and coordinate work with that of other trades supplying materials or performing work in contact with, connecting to, underlying, or overlaying the work of this Section.

2. Provide complete data of requirements for work of this Section to those other trades whose work is affected by or dependent upon the work of this Section.

3. Furnish all items to be built into other work in ample time to avoid delaying the progress of such work.

4. Examine all drawings covering the work of this Section and refer to all other drawings, including mechanical and electrical drawings, which may affect the work of this Section or require coordination by this trade.

D. Existing Conditions: Hardware Supplier shall verify all existing conditions in the field to ensure compatibility with hardware specified in the Hardware Sets herein. Any discrepancies between the existing field conditions and hardware specified shall be brought to the attention of the Engineer immediately. Hardware Supplier shall not order any hardware until all discrepancies are rectified and written approval is granted by the Engineer.

1.8 WARRANTYS

A. Provide a letter from the manufacturer of surface mounted closers, warranting such closers for five (5) years.

B. Provide a letter from manufacturer of concealed floor closers, warranting such closers for twenty-five (25) years.

C. The hardware supplier shall provide a written one (1) year warranty for the rest of the items furnished under this Section.

D. All warranties shall be effective beginning with the date of Substantial Completion.

PART 2 - PRODUCTS

2.1 GENERAL

A. Requirements for design, grade, function, finish, size and other distinctive qualities of each type of finish hardware are indicated herein. Products are identified by using appropriate hardware designation numbers.

B. Manufacturers are listed for each hardware type required. Provide either the product designated, or approved equal.

C. Not withstanding anything to the contrary in this specification or the drawings, the finish hardware shall conform to the requirements of the NYC Building Department and such requirements shall be followed as if specifically set forth in this specification.

D. Finish hardware shall conform to the applicable requirements of the American Insurance Association, and the National Board of Fire Underwriters' Laboratories, Inc., and the NYC Building Department, and each such item shall bear a label or mark of the Underwriters' Laboratories, Inc., indicating its conformity with such requirements for use in connection with its specified location.

E. Finish hardware shall be uniform in color and finish and free from imperfections affecting its appearance, function, operation and serviceability. Such hardware shall be suited and adapted to its required use and shall fit its respective location.

F. Where the finished shape or size of members receiving finish hardware are such as to prevent or render unsuitable the use of the specific types or sizes of such hardware, suitable types or sizes shall be furnished, having as nearly as practicable the same function, operation and quality as the specified hardware.

G. Bolts, screws and other fastenings required for the application of the finished hardware shall be of size and type to fit requirements and shall be of the same material and finish as the exposed parts of such hardware which they adjoin. Exposed screws and bolts shall have countersunk oval heads and bolts shall be provided with cap nuts. Countersunk part of screw and bolt holes shall be finished smoothly without sharp edges and form a firm seal for such screw and bolt heads. Full threaded wood screws shall be furnished for all wood applications. No thru bolts will be allowed. Binding Barrels (Sex-nuts) and bolts shall be provided on push/pulls, exit devices, closers, etc. when being attached to mineral core or particle core wood fire doors.

2.2 PRODUCTS AND MANUFACTURERS

A. The following are approved manufacturers, unless specifically indicated in the Hardware Sets. Underlined manufacturers are those whose products are indicated in the hardware sets.

B. Substitution requests must be made in writing to the Engineer.

HINGES & SPRING HINGES: Ives, McKinney, Stanley, or approved equal.

CONTINUOUS HINGES: ABH, Ives, Markar Products, or approved equal.

FLUSH BOLTS. Ives, Rockwood, Trimco, or approved equal.

PUSH/ PULLS: Rockwood, ABH, Trimco, or approved equal.

LOCKSETS, LATCHSETS & DEADLOCKS: Schlage, Falcon, Sargent, or approved equal.

CYLINDERS & KEYING: Per City of New York’s Requirements.

SURFACE CLOSERS: LCN, Falcon, Stanley, or approved equal.

FLOOR CLOSERS: Rixson, Dorma, Jackson, or approved equal.

STOPS: Ives, Rockwood, Trimco, or approved equal.

OVERHEAD STOPS: ABH, Glynn-Johnson, Rockwood, or approved equal.

SILENCERS: Ives, Rockwood, Trimco, or approved equal.

SADDLES & GASKETING: Zero International, National Guard Products, Hagar, or approved equal.

COAT HOOKS: ABH, Rockwood, Trimco, or approved equal.

KEY CABINETS: TelKee, HPC, Lund Equipment, or approved equal.

2.3 SPECIFIC ITEMS

A. Hinges

1. Minimum of three (3) hinges per door leaf up to 7'-6" high. Provide one additional hinge per 2'-6" or fraction thereof.
2. Hinges shall be of types, sizes and materials as required to suit door weights thickness and fire ratings.
3. Unless otherwise specified hinges shall be standard weight. Doors 3'-4" in width shall receive 5 x 4½ .146 gauge hinges. Doors over 3'-4" in width shall receive 5 x 4½ .190 gauge hinges.
4. Hinge sizes shall be detailed so that the least amount of projection shall be visible from the frame.
5. Unless otherwise specified hinges shall have concealed ball bearings (combination anti-friction or oil impregnated) and five (5) knuckles.
    a. Standard doors shall have non-rising pins.
    b. Doors exposed to the public, and other secure areas, as determined by the City of New York, shall have non-removable pins.
6. Continuous Hinges: Unless otherwise specified in the Hardware Sets, continuous hinges shall be stainless steel, steel, or aluminum with a full length Teflon coated stainless steel pin not less than ¼" in diameter.

B. Pivots

1. Provide quantities and types of pivots (offset, intermediate, or center) as required to suit door sizes and weights.
2. Pivot sets (offset and center) shall consist of top and bottom pivots, unless otherwise indicated.
3. Provide a top pivot for each floor closer unless otherwise indicated.
4. Provide fire rated pivots on all rated doors in a labeled opening.

C. Closers

1. Unless otherwise indicated, closers shall not be visible on the public side of doors. Closers opening into public spaces shall be provided with parallel arms and brackets to suit.
2. Closers shall be sized in accordance with the accepted manufacturer's standards to suit height, width, weight of door and draft conditions.

3. Provide a top pivot for each floor closer.
4. Provide weather sealing compound for each exterior floor closer.
5. Unless specified otherwise in the Hardware Sets, all floor closers shall have a built in dead stop.

D. Locking and Latching Devices

1. Mechanical: Provide types, functions, as specified. Coordinate with City of New York's keying requirements.
    a. Unless otherwise specified in the Hardware Sets, tubular style locksets or latchsets will not be accepted in lieu of cylindrical style sets specified.
    b. Unless otherwise specified in the Hardware Sets, ANSI Grade 3 deadlocks will not be accepted

E. Keys and Keying

1. Coordinate new keying requirements with requirements of City of New York's standard keying system.
2. Provide three (3) keys for each differently keyed lock. Indicated locks shall be keyed differently.
    a. Locks to the following spaces shall be keyed alike:
        1) Mechanical Equipment Rooms, Electrical Panel Rooms, and Telephone Equipment Rooms.
        2) Janitor's Closets.
3. Provide one hundred (100) key blanks.
4. Provide three (3) Master Keys.
5. Provide all cylinders as Construction Master Keyed with All Brass Core.
6. Provide key control system, including key cabinet by TelKee, with capacity to store 150% of keys furnished.
7. Final keying requirements to be determined by the City of New York.

F. Stops: Provide stops to limit the degree of opening, helping to prevent damage to adjacent walls, columns, equipment, the door or its hardware.

1. Overhead Stops
    a. Size overhead stops to suit door width, height, weight and draft condition.
    b. Overhead stops shall have stainless steel tracks with built-in shock absorber with 5-7 degree compression before dead stop. The arm shall be stainless steel with finish as noted.
2. Floor Stops: All stops to be fastened to concrete shall use expansion shields and machine screws.

G. Pushes and Pulls: Provide concealed fasteners where practical. Where exposed fasteners are required provide flush type finished to match push or pull.

H. Flush Bolts: Provide top and bottom extension type flush bolts, mounted twelve (12) inches and seventy-two (72) inches respectively from the bottom of each door, where

scheduled. Provide each bottom flush bolt with a dustproof strike.

I. Silencers: Provide silencers for all non-gasketed and non-weatherstripped frames. Provide three (3) for each single swing door and two (2) for each pair of doors.

J. Automatic Door Bottoms: Unless otherwise specified in the Hardware Sets, automatic door bottoms shall be actuated with an operating force not to exceed one and one-half (1½) pounds.

2.4 FINISHES

A. Provide finish hardware with the following finishes unless otherwise shown:

1. Hinges: US32D
2. Pivots: US32D
3. Surface Closers: 689
4. Floor Closers: US26D
5. Locksets and Exit Devices: US32D
6. Stops: US26D
7. Pushes, Pulls, Kick Plates: US32D
8. Flush Bolts: US26D

PART 3.00 - EXECUTION

3.1 GENERAL

A. Make periodic checks during construction in order to ascertain that the finish hardware furnished has been installed correctly. After completion of all construction work, adjust finish hardware to work properly; test all keys and adjust as required for smooth, free operation.

B. Provide Stainless Steel saddles by Zero International where indicated on the Door Schedule (www.zerointernational.com).

3.2 HARDWARE SETS

HW SET 1

1 – Ea.	¾" Offset Floor Closer	SC27-180A-CWF-SEC (Automatic Hold Open)
1 – Ea.	Intermediate Pivot	M19 x Torx
1 – Ea.	Mortise Lockset (Special)	L9460L-02A x XL11-886 x TORX
1 – Ea.	Mortise Cylinder	To suit
1 – Ea.	Floor Stop	FS18 Series
1 – Set	Weather Seals	429A-SEC
1 – Ea.	Mortise Automatic Door Bottom	355A-SEC

HW SET 2

1 – Ea.	¾" Offset Floor Closer	SC27-180A-CWF-SEC (Automatic Hold Open)

1 – Ea.	Intermediate Pivot	M19 x Torx
1 – Ea.	Mortise Lockset (Special)	L9462L-02A x XL11-886 x TORX
2 – Ea.	Mortise Cylinders	To suit
1 – Ea.	Floor Stop	FS18 Series
1 – Set	Weather Seals	429A-SEC
1 – Ea.	Mortise Automatic Door Bottom	355A-SEC

HW SET 3

Prs.	Butts per Paragraph 2.03.A	5BB1HW 4.5 x 4.5 SH
1 – Ea.	Mortise Lockset (Storeroom)	LV9080L-02A x TORX
1 – Ea.	Mortise Cylinder	To suit
1 – Ea.	Surface Closer-Stop x Hold Open	4040XP-HSCUSH-TORX
3 – Ea.	Silencers	SR64

HW SET 4

Prs.	Butts per Paragraph 2.03.A	5BB1HW 4.5 x 4.5 SH
1 – Ea.	Mortise Lockset (Storeroom)	LV9080L-02A x TORX
1 – Ea.	Mortise Cylinder	To suit
1 – Ea.	Surface Closer-Stop	4040XP-SCUSH-TORX
3 – Ea.	Silencers	SR64

HW SET 5

Prs.	Butts per Paragraph 2.03.A	5BB1HW 4.5 x 4.5
1 – Set	Push Plates with Pull	111 x 73CL x 73L (4” x 16”)
1 – Ea.	Deadlock (Classroom)	L463L
1 – Ea.	Mortise Cylinder	To suit
1 – Ea.	Surface Closer	4040XP-TORX
1 – Ea.	Floor Stop	FS18S
3 – Ea.	Silencers	SR64

HW SET 6

1 – Ea.	Continuous Hinge	A500-STUD-SEC
1 – Ea.	Mortise Lockset (Special) Mortise	L9462L-02A x XL11-886 x TORX
2 – Ea.	Cylinders	To suit
1 – Ea.	Surface Closer-Stop	4040XP-SCUSH-TORX

1 – Set	Weather Seals	429A-SEC
1 – Ea.	Mortise Automatic Door Bottom	355A-SEC

HW SET 7

Prs. Butts per Paragraph 2.03.A		5BB1HW 4.5 x 4.5
1 – Ea.	Mortise Lockset (Storeroom)	LV9080L-02A x TORX
1 – Ea.	Mortise Cylinder	To suit
1 – Ea.	Surface Closer	4040XP-TORX
1 – Ea.	Wall Stop	WS407CVX
3 – Ea.	Silencers	SR64

HW SET 8

rs. Butts per Paragraph 2.03.A		5BB1HW 4.5 x 4.5
1 – Ea.	Mortise Lockset (Classroom)	LV9070L-02A x TORX
1 – Ea.	Mortise Cylinder	To suit
1 – Ea.	Surface Closer	4040XP-TORX
1 – Ea.	Wall Stop	WS407CVX
3 – Ea.	Silencers	SR64

HW SET 9

2 – Ea.	Continuous Hinges	A505-STUD-SEC
2 – Ea.	Flush Bolts	FB458
1 – Ea.	Dustproof Strike	DP2
1 – Ea.	Mortise Lockset (Special)	L9460L-02A x XL11-635 x TORX
1 – Ea.	Mortise Cylinder	To suit
1 – Ea.	Surface Closer-Stop x Hold Open	4040XP-HSCUSH-TORX
1 – Ea.	Surface Overhead Holder/Stop	801x Series
1 – Set	Weather Seals	429A-SEC
2 – Ea.	Surface Automatic Door Bottom	351-SEC
1 – Ea.	Astragal	1840-SEC

HW SET 10

1 – Ea.	Continuous Hinge	A505-STUD-SEC
1 – Ea.	Mortise Lockset (Storeroom)	LV9080-02A x TORX
	Mortise Cylinder	To suit

1 – Ea.

1 – Ea.	Deadlock (Classroom)	L463L
1 – Ea.	Mortise Cylinder	To suit
1 – Ea.	Surface Closer-Stop	4040XP-SCUSH-TORX
1 – Set	Weather Seals	429A-SEC
1 – Ea.	Mortise Automatic Door Bottom	355A-SEC

HW SET 11

Prs. Butts per Paragraph 2.03.A		5BB1HW 4.5 x 4.5
1 – Ea.	Mortise Privacy Set x Indicator	LV9496L-02A x L583-363 x TORX
1 – Ea.	Mortise Cylinder	To suit
1 – Ea.	Surface Closer	4040XP-TORX
1 – Ea.	Wall Stop	WS407CVX
3 – Ea.	Silencers	SR64
1 – Ea.	Coat Hook	AM801

HW SET 12

1 – Ea.	Continuous Hinge	A505-STUD-SEC
1 – Ea.	Mortise Lockset (Special)	L9460L-02A x XL11-886 x TORX
1 – Ea.	Mortise Cylinder	To suit
1 – Ea.	Surface Closer-Stop x Hold Open	4040XP-HSCUSH-TORX
1 – Set	Weather Seals	429A-SEC
1 – Ea.	Mortise Automatic Door Bottom	355A-SEC

HW SET 13

Prs. Butts per Paragraph 2.03.A		5BB1HW 4.5 x 4.5
1 – Ea.	Mortise Passage Set	L9010-02A x TORX
1 – Ea.	Surface Closer	4040XP-TORX
1 – Ea.	Wall Stop	WS407CVX
3 – Ea.	Silencers	SR64

HW SET 14

2 – Ea.	¾" Offset Floor Closers	SC27-180A-CWF-SEC (Automatic Hold

Open)

2 – Ea.	Intermediate Pivots	M19 x Torx
2 – Ea.	Manual Flush Bolts	FB458
1 – Ea.	Dustproof Strike	DP2
1 – Ea.	Mortise Lockset (Special)	L9462L-02A x XL11-886 x TORX
2 – Ea.	Mortise Cylinders	To suit
2 – Ea.	Floor Stops	FS18 Series
1 – Set	Weather Seals	429A-SEC
2 – Ea.	Surface Door Sweeps	8192A-SEC
2 – Ea.	Meeting Stile Gasketing	8879A-SEC

HW SET 15

As req.	Cylinders	To suit

Note: All other hardware required will be specified and provided by the Garage Door Manufacturer.

MISCELLANEOUS

1 – Ea.	Key Cabinet	TelKee Complete System

END OF SECTION

SECTION 08 80 00 – GLAZING

PART 1 - GENERAL

1.1 SUMMARY

A. General: Provide glazing in accordance with requirements of the Contract Documents.

B. Related Work Specified Elsewhere

1. Backerboards and concealed panel clips for mirror assemblies is specified in Section 06 10 0 "Rough Carpentry".
2. Sealants and joint fillers are specified under Section 07 92 00 “Joint Sealants”.
3. Aluminum windows are specified under Section 08 51 13 “Aluminum Windows”.
4. Framed mirrors are specified under Section 10 28 13 “Toilet Accessories”.

1.2 REFERENCES

A. General: Comply with the applicable provisions of the referenced standards except as modified by governing codes and the Contract Documents. Where a recommendation or suggestion occurs in the referenced standards, such recommendation or suggestion shall be considered mandatory. In the event of conflict between referenced standards, this specification or within themselves, the more stringent standard or requirement shall govern.

1. Glass Association of North America (GANA)
   a. "Sealant Manual" and "Glazing Manual".
   b. "Mirrors, Handle with Extreme Care, Tips for the Professional on the Care and Handling of Mirrors".
   c. "Laminated Glazing Reference Manual".
2. Glass Tempering Association (GTA): "Engineering Standards Manual".
3. American Society for Testing and Materials (ASTM):
   a. ASTM C1036, “Specification for Flat Glass”.
   b. ASTM C1048, “Specification for Heat Treated Flat Glass - Kind HS, Kind FT Coated and Uncoated Glass”.
4. Insulating Glass Manufacturer’s Association (IGMA)
   a. IGMA Publication for Insulating Glass: SIGMA TM-3000, "Glazing Guidelines for Sealed Insulating Glass Units”.

5. Consumer Product Safety Commission (CPSC)

   a. Safety Glazing Standard: Where safety glass is indicated or required by the NYC Building Department, provide type of products indicated which comply with ANSI Z97.1 and testing requirements of CPSC 16 CFR Part 1201 for category II materials. Subject to compliance with requirements and the NYC Building Department, provide safety glass with a removable certification label of Safety Glazing Certification Council (SGCC) or other certification agency acceptable to the NYC Building Department.

1.3 SYSTEM DESCRIPTION

A. General: Provide glazing systems capable of withstanding normal thermal movement and wind and impact loads (where applicable) without failure, including loss or glass breakage attributable to the following: defective manufacture, fabrication, and installation; failure of sealants or gaskets to remain watertight and airtight; deterioration of glazing materials; or other defects in construction.

   1. Wind Loading: Design, fabricate and install glazing so that the installed glazing will withstand project, ASCE-7, and New York City Building Code required inward and outward pressure.

B. Design Criteria: Provide glass thicknesses and heat treatment (heat strengthened or fully tempered) in compliance with ASTM E1300, as required to meet specified design criteria, in-service conditions and the following:

   1. Minimum Glass Thickness for Lites: Not less than 1/4 in. for monolithic or for any lite of insulating glass units.

   2. Vertical Glass: For glass set vertically or less than 15° from vertical so as to limit the statistical probability of failure to eight (8) lites per thousand at “Wind Loading” based upon a 60 second uniform load duration.

   3. Stress Breakage: Design glass to resist project temperature stress breakage.

   4. Differential Shading: Design glass to resist thermal stresses induced by differential shading within individual glass lites.

   5. Glass Deflection: Limit the maximum center deflection, relative to glass edges at “Wind Loading” of vertical glass, exterior or interior, to not exceed 1in. and sloped glass (including glass canopies) not to exceed 1/2 in. at center point.

   6. Tempered Glass: Unless otherwise specified tempered glass intended for use on the project shall be heat soaked tested in accordance with BS EN 14179 “Glass in Building-Heat Soaked Thermally Toughened Soda Lime Silicate Safety Glass”, Parts 1 and 2, for a minimum of 2 hours at 290°C +/- 10°C in order to minimize the occurrence of nickel sulfide crystals. This process shall be strictly controlled and carried out paying particular attention to temperature limits and duration of treatment for each phase.

7. Safety Glazing Labeling: Where safety glazing labeling is indicated, permanently mark glazing with certification label of certification agency acceptable to the NYC Building Department. Label shall indicate manufacturer's name, type of glass, thickness, and safety glazing standard with which glass complies.

1.4 SUBMITTALS

A. Product Data: Submit for Engineer's Action. Submit manufacturer's literature, specifications and installation instructions describing the general properties of each material and accessory to be used in the Work. Submit the following information from each manufacturer:

1. Complete instructions for handling, storing, mixing, priming, installing, curing and protecting each glazing material.

2. Sealant adhesion test reports.

3. Mirror Product Data

a. Mirror mastic glass coating compatibility test reports from organic protective coating manufacturer indicating that mirror mastic has been tested for compatibility and adhesion with organic protective coating. Include organic coating manufacturers' interpretation of test results relative to performance and recommendations for use of mastics with organic protective coating.

B. Shop Drawings of Mirror Assembly: Submit for Engineer's action. Submit shop drawings for the fabrication and installation of the mirror assembly, showing layout and dimensions of the Work and detail sections of components including anchorage and support method. Show mirror joint locations. Prepare details at not less than 3 in. = 1 ft. minimum scale.

C. Samples: Submit for Engineer's action. Label samples to indicate product, characteristics, and location in the Work. Samples will be reviewed for color and appearance only. Furnish sufficient samples to establish the full range of colors and textures for materials and assemblies scheduled. Where low 'E' coatings or other type coatings are scheduled for insertion into insulating glass units, provide samples with proposed edge deletion tolerances complete with dimensions. Compliance with other requirements is the responsibility of the Contractor.

1. 12 in. sq. samples of each glass type and glass assembly scheduled. For Insulating glass units provide assemblies representative of final units to be used in the finish work, including scheduled glass lites, coatings, spacer, primary and secondary seals.

2. Samples of each type of setting block, face shim, edge block, glazing sealant and gasket.

3. Sealant samples 12 in. long installed between samples of the materials to be glazed, fully cured.

D. Glazing Schedule: Submit for Engineer's information. Provide a glazing schedule utilizing the same designations shown on Drawings for glazed

openings listing glass types, thicknesses, composition of glass assemblies, coatings and heat treatment if any, for each size opening and location.

E. Engineering Services: Submit for Engineer’s action. Provide calculations to verify materials provided meet specified performance requirements. Calculations shall bear the seal of a Professional Engineer registered in the State of New York. Submit the following:

1. Glass manufacturer's substantiating calculations or data showing that the probability of breakage at the wind loading will not exceed the specified probability of breakage for each type, size and thickness of exterior glass.

2. Thermal stress calculations for each type, size and thickness of exterior glass.

F. Quality Control Submittals: Submit for Engineer’s information.

1. Product Test Reports: Provide product test reports indicating the following products comply with requirements, based on comprehensive testing of current products:

a. Insulating glass.

b. Heat soak testing for tempered glass. Product test reports shall include records of number of cycles and cycle times related to each cycle.

c. Glazing sealants.

d. Glazing gaskets

2. Certificates

a. Document Review: Before commencing work, submit a written statement signed by the Contractor and the Applicator certifying that the Contract Documents, shop drawings and product data have been reviewed with material manufacturers' qualified technical representatives and that they agree the selected materials are proper, compatible with contiguous materials and adequate for the application shown.

b. Certification, Tempered Glass Testing: Submit certification that tempered glass intended for use on the project has been heat soaked tested in accordance with BS EN 14179 “Glass in Buildings-Heat Soaked Thermally Toughened Soda Lime Silicate Safety Glass”, Parts 1 and 2.

c. Certification, Insulating Glass Testing: Submit certification that the insulating glass units have been granted the IGCC classification "CBA" or Associated Laboratories Inc. Classification "Level A".

1) Certification, Structural Silicone Sealant Compatibility: Provide certification by the structural silicone sealant manufacturer that insulating glass

unit secondary seals are compatible with the proposed structural silicone sealant.

2) Certification, Insulating Glass: Provide certification that insulating glass primary and secondary seals are capable of withstanding project structural loading requirements.

d. Certification, Structural Glazing Sealants: Submit certification of the following:

1) That the structural silicone sealants and accessories comply with the Contract Documents and are recommended by the sealant manufacturer for the use intended.

2) That the samples tested for adhesion by the sealant manufacturer comply with their requirements for structural glazing; signed by the sealant manufacturer.

G. Closeout Submittals: Submit, for City of New York's documentation.

1. Warranties: Special warranties specified.

2. Maintenance Data: Furnish maintenance data for each type of glass for use during construction and for use by the City of New York after acceptance of the Work.

1.5 QUALITY ASSURANCE

A. Single Source Responsibility for Glass: To ensure consistent quality of appearance and performance, and to comply with warranty requirements, provide materials produced by a single manufacturer or fabricator for each kind and condition of glass indicated and composed of primary glass obtained from a single source for each type and class required. Glass processes of fabrication including tempering, application of thermal coatings, ceramic enameled coatings and any process of lamination shall be manufactured by and fabricated into insulating units by a single source with the ability to comply with and assume specified warranty provisions.

B. Glazier Qualifications: Engage an experienced glazier who has completed glazing similar in material, design, and extent to that indicated for this Project and with a record of successful in-service performance.

C. Insulating Glass Fabricator: The material or equipment provided by the manufacturer must have been in satisfactory service for not less than five (5) years.

D. Low 'E' Coating Producer: The fabricator/manufacturer shall must, for the past five (5) years, have been regularly engaged in the manufacture of material or equipment similar in type to that required for this Project. Such material or equipment provided by the manufacturer must have been in satisfactory service for not less than five (5) years.

E. Details: Glazing details are for convenience of detailing only and are to be confirmed by the Contractor and glass manufacturer relative to the cited standards and final framing details.

F. Regulatory Requirements: Comply with applicable requirements of the laws, codes, ordinances and regulations of Federal, State and Municipal authorities. Obtain necessary approvals from the NYC Building Department.

G. Workmanship: Comply with GANA standards, and comply with the manufacturer's instructions for the use and installation of each product. Do not use different glazing materials in the same joint system unless the manufacturer of each material has stated in writing that his material is fully compatible with the other material. Employ only tradesmen experienced in the use of the materials. The installation of each lite of glass shall be watertight and airtight, and capable of withstanding temperature changes, wind loading, and impact from operation of doors or operable sash, without failure, including loss or breakage of glass, failure of seal, exudation of sealant and excessive deterioration of glazing materials.

H. Glass and Sealant Manufacturers' Representatives: Do not use glass or sealant produced by any manufacturer who will not agree to send a qualified technical representative to the project site, when requested, for the purpose of rendering advice concerning the proper installation of materials.

I. Field Samples: After the required submittal and review of finish samples, prepare samples of each type glazing system at locations in the building to be designated by the Engineer. Utilize the same materials and installation methods in the samples as required for the final Work. Schedule the installations with allowance for sufficient curing time so that samples may be examined, and necessary adjustments made, at least 1 week prior to date scheduled for commencing installation of the Work. When accepted, sample areas shall serve as the standard for materials, workmanship, and appearance for such work throughout the project, and shall remain part of the final Work.

J. Mock Ups And Testing

1. Visual Mock-Up

a. Provide, at Project site, where directed, glass and glazing for the visual mock-up review by the Engineer, extent as shown, and representative of the finished Work. Provide features as will be used in the final Work.

b. Clean glass installed in mock-up with materials and techniques intended for use on the Project.

c. Replace unsatisfactory Work as required to obtain approval of the Engineer. The approved visual mock-up will become the standard of workmanship for the project and may be used as part of final project.

d. The approval of the visual mock-up does not relieve the Contractor of its obligation to perform the work in accordance with the Contract Documents.

2. Preconstruction Sealant Compatibility and Adhesion Testing: Prior to testing of mock-ups, submit samples of materials that will contact or affect sealants to sealant manufacturers for compatibility and adhesion testing, as indicated below:

   a. Perform sealant adhesion evaluation at the earliest possible time after award of the Contract.

   b. The sealant manufacturer shall perform adhesion evaluation tests in accordance with ASTM C794 using the sealant and production run samples of the finished substrates which are to be used in the test mock-up and in the final Work.

   c. Use test methods standard with manufacturer to determine if priming and other specific joint preparation techniques are required to obtain rapid, optimum adhesion of sealants to joint substrates. Perform tests under conditions of 72 deg. F. temperature and 50% relative humidity. Manufacturer(s) of sealant(s) shall submit written recommendations when installations involve adverse temperature or humidity conditions.

   d. Furnish to the sealant manufacturer the finished substrate samples of such size and quantity as he requires for compatibility and adhesion evaluation. The substrate metal samples shall be of the alloy and with the temper, surface treatment and preparation, primer and finish in each specified color, as are to be used in the test mock-ups and in the final Work.

   e. Schedule sufficient time for testing and analysis of results to prevent delay in the progress of the Work.

   f. Investigate materials failing compatibility or adhesion tests and obtain sealant manufacturer's written recommendations for corrective measures, including use of specially formulated primers.

   g. Testing will not be required when sealant manufacturer is able to submit joint preparation data required above which is acceptable to Engineer and is based on previous testing of current sealant products for adhesion to, and compatibility with, joint substrates and other materials matching those submitted.

3. Preconstruction Mirror Mastic Glass Coating Compatibility Test: Submit mirror mastic products to manufacturer of protective organic coating for testing by coating manufacturer's standard test method to determine compatibility of adhesive with mirrored glass coating.

K. Pre-Installation Meeting: Prior to the start of the Work meet at the Project site to review material selections, methods and sequence of installation, glazing procedures standard of workmanship, quality control requirements, evaluation of suitability of specified compounds and sealants for anticipated weather conditions, coordination with other trades, and other pertinent topics related to the Work.

1.6 DELIVERY, STORAGE AND HANDLING

A. Glazing Materials: Deliver glazing materials to Project site in manufacturers' unopened containers, fully identified with trade name, color, size, hardness, type, class, and grade. Store each item in accordance with manufacturer's instructions.

B. Delivery, Storage and Handling: Deliver, store and handle glass in accordance with manufacturer's recommendations; protected from weather, staining and damage. During storage and handling of glass provide cushions at edges to prevent impact damage. Protect glass from scratches and abrasion.

1.7 PROJECT/SITE CONDITIONS

A. Field Glazing: Do not perform glazing when temperature is below 40 deg. F., unless the manufacturer of the glazing materials specifically recommends application of his materials at lower temperatures. If job progress or other conditions require glazing work when temperatures are below 40 deg. F. (or below the recommended minimum temperature), consult the manufacturer and establish the minimum provisions required to ensure satisfactory work. Record in writing to the manufacturer, with copy to the Engineer, the conditions under which such glazing work was performed and the provisions made to ensure satisfactory work.

1.8 WARRANTIES

A. Warranties specified in this Article shall not deprive the City of New York of other rights the City of New York may have under other provisions of the Contract Documents and are in addition to and run concurrent with other warranties made by the Contractor under requirements of the Contract Documents.

1. Special Warranty, Insulating Glass (Vertical Application): Provide a ten (10) year written warranty, warranting glass assemblies against material obstruction of vision as a result of dust or film formation on the internal glass surfaces as a result of the failure of the hermetic seal. Upon notification of such defects, within the warrantee period make the necessary replacements at the convenience of the City of New York.

a. Fabricator of insulating glass assemblies which contain Low “E” coatings, metallic coating, decorative ceramic frit coatings and/or laminated glass within assemblies shall assume responsibility for coater and laminator supplier’s warranties (if not performed by the fabricator) specified herein and shall issue a single source warranty for the entire insulating glass assembly.

2. Special Warranty, Laminated Glass: Provide a ten (10) year written warranty, warranting against deterioration of laminated glass. Deterioration of laminated glass is defined as the development of manufacturing defects including edge separation or delamination which materially obstructs vision through glass and blemishes exceeding those allowed by referenced laminated-glass standard. Upon notification of such defect, within the warranty period, make the necessary replacements at the convenience of the City of New York.

3. Special Warranty, Coated Glass: Provide a ten (10) year written warranty, for the coated glass against peeling, uneven color, fading cracking, and other indications of deterioration in coating. Upon notification of such defect, within the warranty period, make the necessary replacements at the convenience of the City of New York.

4. Special Warranty, Sealant: Provide a written warranty, agreeing to repair or replace silicone sealant compounds which have failed to provide airtight and watertight joints for any reason, or which appear to have failed in adhesion, cohesion, abrasion-resistance, migration-resistance, stain-resistance, general durability or other form of apparent deterioration (excluding inherent qualities and limitations clearly specified in the manufacturer's data which was submitted). Period of warranty shall be twenty (20) years, and warranty shall be signed by the Manufacturer, the installer and the Contractor. Comply with these Specifications for repair or replacement of work.

5. Special Warranty, Mirror: Provide a five (5) year written warranty, warranting against evidence of silver spoilage. Upon notification of such defects, within the warranty period, make the necessary replacements at the convenience of the City of New York.

PART 2 - PRODUCTS

2.1 GLASS

A. General: Provide glass in conformance with requirements of the specified standards. The acceptable color and/or defects as defined by the specified standards shall be determined by samples of such defects and/or color. Glass which does not match the accepted sample shall be subject to rejection by the Engineer. In the event such samples are not or cannot be furnished, the Engineer will determine the acceptability of glass relative to color and/or observable defects in each case. Comply with ASTM C1036 unless otherwise specified. Type and thickness as shown or specified.

B. Float Glass: Type I, Class 1, Quality Q3.

C. Heat Treated Glass: Comply with ASTM C1048, unless otherwise specified. Type and thickness as shown or specified.

1. Glass for Heat Treating

a. Float, Type I, Class 1, Quality Q3.

b. Heat Absorbing, Type I, Class 2, Quality Q3, color as shown.

2. Sizes and Cutting: Prior to heat treating, cut glass to required sizes as determined by accurate measurement of openings to be glazed, making allowance for required edge clearances. Cut and process edges in accordance with glass manufacturer's recommendations. Do not cut or treat edges in the field.

3. General: For glass which has been heat treated, maintain roller marks running horizontally in the final installation, with roller wave distortion parallel to the bottom edge of glass as installed, unless otherwise indicated. Roller wave distortion shall be in the same direction as quenching distortions, strain patterns or other distortions that may be a result of the heat treating process as referenced in ASTM C1048. For glass which has been heat treated vertically, locate tong marks along an edge which will be concealed in the glazing system.

   a. Overall Bow and Warp Tolerances: Heat treated glass shall be examined by the glass manufacturer to detect and discard lites which exceed one half (50%) the maximum bow and warp tolerances in any direction as listed in ASTM C1048 Table 2.

   b. Roll Ripple Tolerances: Where the heat treatment process results in essentially parallel ripples or waves, the deviation from flatness at any peak (peak to valley deviation) shall not exceed 0.005 in. or the average rollerwave distortion shall be certified not to exceed 0.002 in., with a maximum sag at the leading and trailing edge of 0.01 in.

   c. The more stringent requirement of the bow, warp, and roll ripple tolerances will govern). A site inspection if required, for roller wave and bow tolerances should be viewed from a minimum distance of 10 ft.

4. Fully Tempered Glass: Comply with ASTM C1048, Kind FT, and meeting the requirements of ANSI Z97.1. Strengthen by manufacturer's standard heat- treatment process so that the residual surface compression is not less than 10,000 psi or the edge compression not less than 9700 psi).

5. Heat-Strengthened Glass: Comply with ASTM C1048, Kind HS. Strengthen by manufacturer's standard heat-treatment process so that the residual surface compression is not less than 3500 psi or greater than 7500 psi.

D. Laminated Glass: ASTM C1172, two sheets of glass permanently factory laminated under heat and pressure with an interlayer of 0.060 in. thick clear plasticized polyvinyl butyral (PVB) or ionoplast interlayer Sentry Glass Plus (DuPont), as specified in Glass Schedule, made specifically for laminating glass.

1. Provide type and thickness of glass sheets as shown or specified. Fabricate laminated glass to produce glass free of foreign

substances and air or glass pockets in an autoclave utilizing heat plus pressure.

2. Where scheduled, provide translucent, photographically patterned or colored, interlayer made specifically for laminating glass and matching approved sample.

3. Prior to laminating, cut glass to required sizes and profiles as determined by accurate measurement of openings to be glazed, making allowance for required edge clearances. Grind and polish all edges and slightly ease all arises and corners.

4. Do not cut or treat edges in the field.

E. Low-Emissivity (Low 'E') Coated Glass: Provide low-emissivity factory applied coating complying with ASTM C1376 and resulting in a stable, uniform, nearly invisible coating which imparts average maintained insulating performance of at least R = 2.5. Comply with physical performance criteria as specified herein for each individual type of glass.

F. Coated Glass: Provide coated glass coating complying with ASTM C1376 and as follows:

1. Sputter-Coated Float Glass: Float glass with metallic-oxide or metallic-nitride coating deposited by vacuum deposition process after manufacture and heat treatment (if any), complying with requirements specified in glass type schedules.

G. Insulating Glass Units: ASTM E2190; Use types of glass shown in fabricating insulating glass units. Use quality of glass specified hereinbefore.

1. Provide dual edge-sealed insulating glass units which are certified for the insulating glass seal classification "CBA" by the Insulating Glass Certification Council (IGCC) or classification "Level A" by the Associated Laboratories, Inc. (ALI) Certification Program when tested in accordance with ASTM E2188, ASTM E2189 and ASTM C2190 (as sponsored by the Sealed Insulating Glass Manufacturer's Association).

a. Provide accurate and straight edge deletions of coatings at areas of insulating glass assemblies where Low “E” coatings, metallic coating or other decorative coatings are applied to surfaces scheduled to be in contact with the primary seal of insulating glass units.

2. Fabrication: Fabricate units at factory with sheets of glass hermetically sealed at edges with a permanent elastomeric sealant. Dehydrate entrapped air. Glass lites shall be separated by desiccant filled stainless steel spacer marked with the appropriate classification, listed manufacturer and approval on the spacer with bent, welded or fused corners, splices or joints.

H. Mirror Glass

1. ASTM C1036, Type 1, Class 1, Quality q[1] nominal thickness 1/4 in. thick unless otherwise shown or specified.

2. Provide silvering, copper backing and protective heat catalyzed paint coating on entire back surface of mirror.

3. Exposed edges of mirrors shall have a flat polished (eased) profile. Perform edge treatment and sealing in factory immediately after cutting to final sizes. Do not cut or treat edges in the field.

I. Clear Low Iron Glass: ASTM C1036, Type 1, Class 1, Quality Q3, Low iron composition soda lime glass with a minimum 91% visible light transmission and a minimum solar heat gain coefficient of 0.87.

2.2 GLAZING MATERIALS

A. Silicone Rubber: Complies with ASTM C920 and ASTM C1184 requirements, is compatible with system components with which it comes in contact, and is specifically formulated and tested for use as a structural sealant; class and use as best suited for the intended purpose; Provide one of the following:

1. "995 Silicone Building Sealant" (Dow Corning Corp.) for field use and "983 or 995 Silicone Building Sealant"(Dow Corning Corp.) for use in the shop.

2. "Ultraglaze SSG4000 or Ultraglaze SSG4000AC Silicone Structural Glazing Sealant" (Momentive Performance Materials Inc.); for field use and "Ultraglaze SSG4400 Silicone Structural Glazing Sealant" (Momentive Performance Materials Inc.) for use in the shop.

3. "Sikasil SG-18 Building Sealant" (Sika Corp.) for field use and "Sikasil SG-18 Building Sealant" or SG-500 Silicone Building Sealant"(Sika Corp.) for use in the shop.

B. Butyl Glazing Tape Reinforced: A pre-formed, non-sagging, non-oxidizing, non- staining butyl rubber tape with core reinforcement, one of the following:

1. "Extru-Seal Butyl Rubber Tape" (Pecora Corp.).

2. "No. 166.6 Elastic Butyl Tape" (Presstite Div.).

3. "Tremco 440 Tape" (Tremco).

C. Glazing Gaskets

1. Closed Cell Soft Compression Gaskets: Black, continuous extruded or molded expanded foam neoprene or EPDM with a Shore A durometer hardness and profile adequate to fulfill the overall performance requirements specified, to maintain watertight seal and complying with ASTM C509, Type II. Provide adhesive on one side.

2. Dense Compression Solid Gaskets: Black, continuous extruded or molded neoprene, EPDM or silicone with a Shore A durometer hardness and profile as required to provide pressure adequate to fulfill the overall performance requirements specified and

complying with the applicable provisions of ASTM C864 or ASTM C1115.

3. Fully vulcanize gasket corners where compatible with installation procedures.

D. Setting Blocks: ASTM C864; neoprene blocks, 80 to 90 Shore A durometer hardness.

E. Edge Blocks: ASTM C864; neoprene blocks, 60 to 70 Shore A durometer hardness.

F. Bond-Breaker Tape: Polyethylene tape or other plastic tape recommended by sealant manufacturer for preventing sealant from adhering to rigid, inflexible joint- filler materials or joint surfaces at back of joint where such adhesion would result in sealant failure. Provide self-adhesive tape where applicable.

G. Joint Cleaner, Primer and Sealer: The products recommended by the manufacturer. Never apply or allow primers to come into contact with glass surfaces.

H. Mirror Components

1. Mirror Mastic: An adhesive setting compound, manufactured specifically for setting mirrors by spot application, certified as compatible with back of mirror coating by organic protective coating manufacturer, scheduled mirror substrate and approved by mirror manufacturer. Comply with mirror mastic manufacturer's written instructions for size, number and pattern of mastic spots required for installation. Subject to compliance with requirements, provide products by one of the following:

a. Gunther Mirror Mastics.

b. Palmer Products Corporation.

c. Glazers Choice, Inc.

d. Or approved equal.

2. Mirror Edge Sealer: A mirror edge sealer manufactured specifically for sealing mirror edges and that has proven to be compatible with mirror coating and approved by mirrored glass manufacturer for use in protecting against silver deterioration at mirror edges; Provide one of the following:

a. "Seal-Kwik" (C. Gunther Co.).

b. "No. 209 Mirror Edge Sealant" (Sprayway, Inc.).

c. "Mirror Edge Sealant" (CDL).

d. Or approved equal.

3. Stainless Steel Angle Mirror Support and Frame: Stainless 304; hot or cold rolled angle; 1 in. x 1 in. x 1/8 in. thick; polish edge of exposed portion of angle to bright finish.

2.3 FABRICATION

A. Sizes: Fabricate glass to sizes required for glazing openings indicated, with edge clearances and tolerances complying with recommendations of glass manufacturer. Provide thicknesses indicated or, if not otherwise indicated, as recommended by glass manufacturer for application indicated.

B. Cutting: Obtain sizes from shop drawings or by field measurement. Cut glass to fit each opening with edge clearances and bite on glass as recommended by glass manufacturer. Do not nip glass edges. Factory cut heavy heat absorbing glass 3/8 in. and above and heavy float glass (1/2 in. and above. Edges may be wheel cut or sawed and seamed at manufacturer's option. For glass to be cut at site, provide glass larger than required so as to obtain, clean-cut edges without seaming or nipping. Do not cut, seam, nip or abrade glass after heat-tempering.

C. Edgework for Butt Glazing: Where glass is to be butt joined with silicone sealant, provide flat ground butting glass edges having a satin finished flat edge with eased arris corners.

D. Edgework for Exposed Edges: Where edges of glass are to be exposed in the finish work, provide ground and polished edges and slightly eased arrises and eased corners.

E. Edgework for Tempered Glazing: Grind and polish all edges and slightly ease all arrises and corners.

F. Insulating-Glass Units: Preassembled units consisting of sealed lites of glass separated by a dehydrated interspace, and complying with ASTM E2190 and ASTM E774 for "Class CBA" (IGCC) or "Level A" (ALI) units. Dimensions indicated in the Glass Schedule are nominal and the overall thicknesses of units are measured perpendicularly from outer surfaces of glass lites at unit's edge. Fill sealed space with dry air or other dry gas with a dew point not exceeding -50 deg. F. Exclude dirt and other foreign substances. Dual seal, with polyisobutylene primary seal and silicone secondary seal unless otherwise shown or specified. Provide manufacturer's standard spacer material and construction with molecular sieve or silica gel desiccant, or blend of both.

1. Space-Bar Frame: Tubular stainless steel, sealed corners and filled with desiccant, with breather ports into the sealed space; sized to provide sealed space of thickness shown. Provide spaces complying with the following requirements:

   a. Stainless steel with black finish.

2. Structural Glazed Insulating Units: Factory glaze structural silicone work. Clean the frames and glazing material surfaces with suitable solvent. Prime surfaces and install sealant according to the sealant manufacturer's recommendations. Clean excess sealant before the sealant cures. Do not transport units until sealant has cured.

a. Provide insulating glass units with a silicone secondary seal in accordance with ASTM C1369 and complying with IGCC-certified "CBA" level or Associated Laboratories Inc. Classification "Level A" and compatible with specified structural silicone sealant glazing system.

b. Dual Edge-Seal: Primary sealant of polyisobutylene black color. Secondary sealant of 2 component silicone black color.; specifically produced for secondary seals of insulating glass units and approved for use in structural silicone glazing systems.

2.4 GLASS SCHEDULE

A. Glass (**GL-01**): 1 in. thick insulating glass unit comprised of a 1/2 in. thick heat strengthened, low iron glass outer lite with a high-performance low-E coating on the No. 2 surface, 1/2 in. argon filled airspace with black stainless steel spacer and

1/2 in. thick laminated glass consisting of one (1) lite of 1/8 in. thick, heat strengthened, low iron glass, 0.060 in. thick clear plasticized polyvinyl butyral interlayer and one (1) lite of 1/8 in. thick, heat strengthened, low-iron glass; grind and polish all edges and slightly ease all arrises and corners, match Engineer's sample. The following physical properties are the minimum properties for this glass type:

Physical Properties Transmittance

Visible Light:	68 %
Solar Energy:	30 %
Ultra Violet:	0.0033 %

Reflectance

Visible Light Exterior:	12 %
Visible Light Interior:	13 %
Solar Energy:	42 %

ASHRAE U-Value

Winter Nighttime:	0.23 BTU/(hr. x sq. ft. x deg. F)
Summer Daytime:	0.20 BTU/(hr. x sq. ft. x deg F)
Shading Coefficient:	0.39
Solar Factor (SHGC):	0.34
Relative Heat Gain:	81 BTU/(hr. x sq. ft. x deg. F)

B. Glass (**GL-02**): 1/2 in. thick laminated glass consisting of one (1) lite of 1/4 in. thick, heat strengthened, low iron glass, 0.060 in. thick clear plasticized polyvinyl butyral interlayer and one (1) lite of 1/4 in. thick, heat strengthened, low-iron glass; grind and polish all edges and slightly ease all arrises and corners, match Engineer's sample.

C. Glass (**GL-03**): ¼ in. low-iron mirror, with flat polished (eased) profile and safety film backing.

PART 3 - EXECUTION

3.1 GENERAL

A. Manufacturer's Instructions: Prepare substrates, apply primers and install the work of this Section, including components, and accessories in accordance with the manufacturer's instructions, except where more stringent requirements are shown or specified, and where project conditions require extra precautions or provisions to ensure satisfactory performance of the Work.

3.2 EXAMINATION

A. Verification of Conditions: Examine the areas to receive the Work and the conditions under which the Work would be performed. Contractor shall remedy conditions detrimental to the proper and timely completion of the Work. Do not proceed until unsatisfactory conditions have been corrected.

3.3 PREPARATION

A. Substrate Acceptability: Commencement of installation shall constitute acceptance of substrate conditions by the Installer.

B. Cleaning: Clean glazing channels, stops and rabbets to receive glazing materials of obstructions and deleterious substances which might impair the work. Remove protective coatings which might interfere with bond of sealants.

C. Priming: Prime surfaces to receive glazing compounds, except where manufacturer provides written reports of tests conducted by an independent testing agency which demonstrates that primer or sealer is not required for the conditions of use and the substrates involved. When priming, comply with manufacturer's recommendations both for materials and procedures.

D. Inspection: Inspect each piece of glass immediately before installation. Do not install pieces which are improperly sized or have damaged edges, scratches or abrasion or other evidence of damage. Remove labels from glass immediately after installation.

3.4 INSTALLATION

A. Standards: Unless otherwise shown or specified, comply with recommendations and requirements of the GANA "Glazing Sealing Systems Manual" and "Glazing Manual".

B. Setting Blocks: Locate setting blocks at sill one-quarter of the width in from each end of the glass, unless otherwise recommended. Use blocks of sized 1/8 in. wider than the glass thickness and 1/16 in. to 1/8 in. less than the width of the glazing channel to support the glass.

C. Edge Blocks: Provide edge blocks, located in glazing rebate to insure against displacement of the glass and against metal to glass contact within the rebate and to ensure permanently adequate bite of the glass within the glazing system.

D. Setting of Glass: Set glass in a manner which produces greatest possible degree of uniformity in appearance. Where safety glazing is scheduled or required, install glass after detaching removable safety glazing label unless otherwise required by the NYC Building Department. If local authorities require permanent labeling, install glass with permanent safety glazing label in concealed or inconspicuous locations subject to selection by the Engineer.

E. Glazing Materials: Do not use 2 different glazing materials in the same joint system unless the manufacturer of each material has stated in writing that his material is fully compatible with the other material.

1. Use suitable protection to limit coverage of glazing materials to the surfaces intended for sealants.

2. Miter-cut and seal joints of glazing gaskets to provide a continuous watertight and airtight seal at corners and other locations where joints are required. Vulcanize corner joints where compatible with installation procedure. Where wedge-shaped gaskets are driven into one side of channel to pressurize gasket on opposite side, provide adequate anchorage so gasket cannot walk out when installation is subjected to movement. Do not exceed edge pressures stipulated by glass manufacturers for installing glass lites.

3. Tool exposed surfaces of glazing materials to provide a slight wash away from the glass. Install exposed tapes and gaskets with a slight protrusion above stops in the final compressed condition.

F. Insulating Glass Units: Set insulating glass units with void between edge of units and glazing channel. Do not glaze insulating glass units with glazing compounds which might have a deleterious effect on the seal of the units. Completely conceal the edge binding of insulating glass units with glazing material and extend material a minimum of 1/8 in. onto glass surfaces at each edge, to provide glazing seal independent of hermetic seal.

G. Structural Sealant Glazed Units

1. Provide face shims for glass structurally glazed to separate glass from stops. Locate face shims opposite each other and no farther than 24 in. apart and no closer than 12 in. to a corner. Make bite of space on glass a nominal 1/4 in. or greater.

2. Provide continuous glazing spacers, sized and located to allow for sealant dimensions which will meet the specified Performance criteria.

3. Where joint filler is used as backup for sealants, install filler continuously to depth and shape for proper application and performance of products. Apply joint fillers accurately to form the joint profile shown. Provide watertight and airtight corners and joints.

4. Install bond breaker in joints as shown and wherever required to prevent bond of the sealant to surfaces where such bond might impair the Work.

5. Apply sealants in continuous beads without open joints, voids or air pockets so as to provide a watertight and airtight seal for the entire joint length. Seal joints on the exterior of the building, both curtain wall-to-curtain wall joints and curtain wall-to-contiguous construction. Tool exposed surfaces of glazing sealants to provide a slight wash away from the glass.

H. Mirror Glazing

1. Adhesive Mounting of Mirrors

a. Identify and examine surfaces over which mirror is to be mounted. Comply with printed installation directions for preparation of mounting surfaces including coating surfaces with special bond coating where applicable or priming and sealing substrate as recommended.

b. Paint back of mirror with an additional coat of moisture-resistant paint of the type compatible with mirror mastic and substrate. Apply mirror edge sealer to edges of mirror.

c. Provide 1/2 in. thick fire-retardant treated plywood mirror backerboards as specified in Section 061 0 00 "Rough Carpentry". Provide 1 in. x 1 in. x 1/8 in. thick stainless steel angle frame with mitered corners and bright polished finished exposed edges. Secure angle frame to wall construction with fastening devices appropriate for substrates encountered spaced 16 in. o.c. maximum. Secure plywood backerboard to wall using fastening devices appropriate for substrates encountered spaced 12 in. o.c. maximum at perimeter 1/2 in. from corners and three rows of 3 fasteners each in the backerboard field. Countersink fasteners flush with plywood surface. Butt adjacent panels without lapping. Prepare panels for priming as required by manufacturer of mirror mastic.

d. Support mirror with stainless steel satin finished angle frame with bottom support designed to withstand mirror weight. Provide 1/8 in. thick by 4 in. long x 1/4 in wide setting blocks at quarter points. Apply mirror mastic utilizing special tool to assure complete and accurate coverage. Do not cover more than 25% of mirror back. Provide neoprene shims, double face tape or other type compatible material to allow for minimum clearances for mastic. Apply mirror to substrate so that areas not covered with mastic will remain open for ventilation, with minimum clearance from substrate as recommended. Provide temporary rigid support until adhesive has set.

e. Fill 1/8 in. wide joint between stainless steel angle and face of mirror with continuous backer rod and silicone sanitary rubber sealant.

I. Glass to Glass Glazing: Apply structural silicone sealant to abutting surfaces of glass.

J. Completed Installation: The installation of each lite of exterior glass shall be watertight, airtight, and capable of withstanding temperature changes, wind loading and impact from operation (doors and operable sash) without failure of any kind including failure of seal, exudation of sealant and excessive deterioration of glazing materials.

K. Glass/Visual Distraction Marks: Provide window and door distraction markings on glass surfaces, in colors, uniform patterns and spacings shown and as required to comply with the requirements specified in Paragraph "References ". Provide one of the following methods:

1. Field paint glass utilizing glass preparation methods and paints to provide uniform characters with sharp edges and tightly registered patterns, free from blemishes or other defects which, in the Engineer's opinion, will impair the finished work.

2. Provide decals (specifically manufactured for application to glass) applied to the glass to provide uniform characters with sharp edges and tightly registered patterns, free from blemishes or other defects which, in the Engineer's opinion, will impair the finished work.

3.5 CLEANING

A. General: Maintain glass in a reasonably clean condition during construction so that it will not become stained and will not contribute to the deterioration of glazing materials. Conduct a systematic inspection program not less than once a month for glass. Clean to meet above requirements. Clean excess sealant or compound from glass and framing members immediately after application. Wash glass on both faces not more than 4 days prior to acceptance by the City of New York.

3.6 PROTECTION

A. General: Protect glass from breakage immediately upon installation. Use streamers or ribbons suitably attached to framing and held free of the glass. Do not apply warning markings directly to the glass. Do not permit edges of glass to be exposed to standing water. Protect glass and glazing materials during the construction period so that they will be without indication of damage or deterioration at the time of acceptance by the City of New York. Cover glass to protect it from activities that might abrade the surfaces.

B. Replacement: Replace glass during the construction period which is broken, cracked, chipped or damaged in any way and from any source, including weather, vandalism or accidents.

END OF SECTION

SECTION 09 21 17 – GYPSUM BOARD SYSTEMS

PART 1 - GENERAL

1.1 SUMMARY

A. General: Provide cementitious backer board systems in accordance with requirements of the Contract Documents.

B. Related Work Specified Elsewhere

1. Sealants and joint fillers other than specified herein installed at interface of cementitious backer board assemblies and other building components are specified under Section 07 92 00 “Joint Sealants”.

1.2 REFERENCES

A. General: Comply with the applicable provisions of the referenced standards except as modified by governing codes and the Contract Documents. Where a recommendation or suggestion occurs in the referenced standards, such recommendation or suggestion shall be considered mandatory. In the event of conflict between referenced standards, this specification or within themselves, the more stringent standard or requirement shall govern.

1. American Society for Testing and Materials (ASTM):

a. ASTM C754, “Installation of Steel Framing Members to Receive Screw-Attached Gypsum Wallboard, Backing Board, or Water- Resistant Backing Board”.

b. ASTM C645, “Specification for Nonstructural Steel Framing Members”.

c. ASTM C919, “Use of Sealants in Acoustical Application”.

2. Steel Stud Manufacturers Association (SSMA): "Product Technical Information".

1.3 DEFINITIONS

A. Gypsum Board System Construction Terminology: Refer to ASTM C11 for definitions of terms for gypsum board system construction not defined in this Section or in other referenced standards.

1.4 SYSTEM DESCRIPTION

A. Performance Requirements: For information only. Partition schedule and locations are shown on the drawings.

1. Loading Criteria, Typical Partitions: Design and install cementitious backer board system components so that the completed partition will withstand a minimum inward and outward pressure of 5 psf normal to the plane of the wall.

2. Deflection Criteria

a. Deflection, Support Framing Cementitious backer Board Partitions: Deflection of support framing for cementitious backer board partition systems shall be limited to 1/240 of the span in height, except as otherwise shown or specified.

3. Temperature Criteria: Design, fabricate and install component parts scheduled for installation on the exterior, to provide for expansion and contraction over an ambient temperature range of 120 deg. F. and a surface temperature range of 180 deg. F. without buckling, sealed joint failure, undue stress on members or anchors, and other detrimental effects

4. Movements: Design, fabricate and install cementitious backer board system Work to withstand building movements due to loading deflections, shrinkage and creep whose values are shown or specified elsewhere.

B. Design Modifications: Make design modifications only as may be necessary to meet performance requirements and coordinate the Work. Variations in details and materials which do not adversely affect appearance, durability or strength shall be submitted to the Engineer for review.

1.5 SUBMITTALS

A. Product Data: Submit, for Engineer’s action, manufacturer's technical data for each component of cementitious backer board system, including related accessories. Furnish a material list with technical data documenting the location and primary function, quality, and performance of each material component or system to be used in the Work, or other such primary characteristics as required by the Drawings or Specifications.

B. Shop Drawings: Submit for Engineer’s action. Submit shop drawings for the fabrication and installation of the Work. Prepare details at not less than 3 in. = 1 ft. minimum as follows:

1. Details of unusual conditions in connection with cementitious backer board system construction.

2. Proposed locations of control joints that are required but not shown.

C. Samples: Submit for Engineer’s action. Label samples to indicate product, characteristics, and location in the Work. Samples will be reviewed for color and appearance only. Furnish sufficient samples to establish the full range of colors and textures for materials exposed in the finished work. Compliance with other requirements is the responsibility of the Contractor.

1. 12 in. long sample of each type of metal trim and control joints.

D. Quality Control Submittals: Submit for Engineer's information.

1. Certificates

a. Document Review: Before commencing work, submit a written statement signed by the Contractor and the Applicator certifying that the Contract Documents, shop drawings and product data have been reviewed with material manufacturers' qualified technical representatives and that they agree the selected materials are proper, compatible with contiguous materials and adequate for the application shown.

1.6 QUALITY ASSURANCE

A. Single Source

1. Single-Source Responsibility for Steel Framing: Obtain steel framing members for cementitious backer board systems from a single manufacturer acceptable to the cementitious backer board system manufacturer. Steel framing and related accessories shall be manufactured by a current member of the Steel Stud Manufacturers Association.

2. Single-Source Responsibility for Panel Products: Obtain each type of cementitious backer board and other panel products from a single manufacturer.

3. Single-Source Responsibility for Finishing Materials: Obtain finishing materials from either the same manufacturer that supplies cementitious backer board systems and other panel products or from a manufacturer acceptable to cementitious backer board system manufacturer.

B. Installer Qualifications: The entity performing the work of this section must, within the last five (5) consecutive years prior to the bid opening have successfully completed in a timely fashion at least three (3) projects similar in scope, size and type to the required work.

C. Regulatory Requirements: Comply with applicable requirements of the laws, codes, ordinances and regulations of Federal, State and Municipal authorities. Obtain necessary approvals from the NYC Building Department.

1. Requirements of Regulatory Agencies: Wherever a fire resistance classification is shown involving cementitious backer board systems (3-hr., 2 hr. and similar designations), provide materials, accessories and application procedures which have been listed by UL or tested according to ASTM E119 to achieve the rating required.

D. Mock-Ups:

1. Visual Mockups: After approval of samples and sample panel(s), and prior to commencement of the Work, provide a visual mock-up, of not less than 100 $ft.^2$ of each type of finish, including at least one control joint, to demonstrate aesthetic effects of finishes as

well as qualities of materials and execution. Simulate finished lighting conditions for review of in-place unit of Work. Mock- up shall be representative of the finished Work in all respects.

2. Build visual mockups to comply with the following requirements, using materials indicated for final unit of Work. Locate mockups on-site in the location and of the size indicated or, if not indicated, as directed by Engineer. Demonstrate the proposed range of aesthetic effects and workmanship. Retain and maintain mockups during construction in an undisturbed condition as a standard for judging the completed Work. Approved mockups in an undisturbed condition at the time of Substantial Completion may become part of the completed Work.

1.7 DELIVERY, STORAGE AND HANDLING

A. Package, Shipping, Handling and Unloading: Deliver materials to project site in manufacturer's unopened bundles and containers with manufacturer's name, brand, type and grade clearly indicated thereon. Handle cementitious backer board to prevent damage to edges, ends, and surfaces. Do not bend or otherwise damage metal corner beads and trim.

B. Storage and Protection: Store materials inside, above grade in a dry, ventilated space, under cover and in accordance with manufacturer's instructions. Protect from soiling or damage Avoid exposure of material to the weather by using protective covers. Handle materials to avoid damage. Neatly stack cementitious backer panels flat to prevent sagging.

1.8 PROJECT/SITE CONDITIONS

A. Project Conditions: Establish and maintain project conditions for applying and finishing cementitious backer board to comply with ASTM C840 requirements or cementitious backer board manufacturer's recommendations, whichever are more stringent.

B. Do not install panels until installation areas are enclosed and conditioned.

C. Do not install panels that are wet, those that are moisture damaged, and those that are mold damaged. Indications that panels are wet or moisture damaged include, but are not limited to, discoloration, sagging, or irregular shape. Indications that panels are mold damaged include, but are not limited to, fuzzy or splotchy surface contamination and discoloration.

D. Temperature Limitations: Installation of board joint treatments shall not start when outside temperature is below 55 deg. F., unless building is enclosed and heated to maintain a continuous and uniform temperature of not less than 55 deg. F., from one week prior to beginning of joint treatment until joint treatment is completed and thoroughly dry. Ventilation, either natural or supplied by fans, circulators or air conditioning systems shall be provided to remove excess moisture during joint treatment. Temperature requirements may be waived only on recommendation of cementitious backer board materials manufacturer.

1.8 WARRANTY

A. General: Warranties specified in this Article shall not deprive the City of other rights the City may have under other provisions of the Contract Documents and are in addition to and run concurrent with other warranties made by the Contractor under requirements of the Contract Documents.

1. Special Warranty, Furnish a written warranty, for a five (5) year period, signed by the Manufacturer stating that the cementitious backer board will be free of manufacturing defects that make it unsuitable for its intended use. Upon notification of such defects, within the warranty period, make the necessary repairs and replacements, at the convenience of the City. Other guarantees or warranties may not be substituted by the Contractor for the terms of this special warranty.

PART 2 - PRODUCTS

2.1 MANUFACTURERS

A. General: Subject to compliance with requirements, provide cementitious backer board and steel framing products by one of the following:

1. Cementitious Backer Board and Related Products
    a. USG Corporation.
    b. GP Gypsum Corporation.
    c. National Gypsum Company.
    d. CertainTeed Corp.
2. Steel Framing and Furring
    a. Clark Western Building Systems.
    b. Dietrich Industries, Inc.
    c. MarinoWare; Division of Ware Ind.
    d. USG Corporation for C-H Studs Only.

2.2 STEEL FRAMING AND FURRING

A. Structural Accessories: Steel framing and furring components specified herein by proprietary designation are as manufactured by Dietrich Industries, Inc. and establish the quality standards required. Equivalent products of other manufacturers will be considered provided they meet those established standards.

1. Runners: ASTM C645, roll formed galvanized steel, channel or angle shape, type, size and gauge as recommended by the cementitious backer board manufacturer for the wall system indicated. Provide “Drywall (Nonstructural) Track (TR-Series)” (Dietrich Industries, Inc.).

2. Metal Studs: ASTM C645, roll-formed galvanized steel studs or dimpled steel studs, size and gauge as recommended by the cementitious backer board manufacturer for the wall system and height indicated; the following types:

   a. "ST Series" (Dietrich Industries, Inc.), for interior partitions, ceilings and column fireproofing.

3. Furring Brackets: Serrated-arm type, adjustable, fabricated from corrosion-resistant steel sheet complying with ASTM C645, minimum thickness of base (uncoated) metal of 0.033 in., designed for screw attachment to steel studs and steel rigid furring channels used for furring.

   Provide “FCWB Adjustable Wall Furring Bracket” (Dietrich Industries, Inc.).

4. Metal Furring Strips: 25 gauge electrogalvanized steel members depth as required; Provide "Z-Furring Channels" (Dietrich Industries, Inc.).

2.3 BOARD MATERIALS

A. Cementitious Backer Board: Provide cementitious backer units complying with ANSI A118.9, ASTM C1288 or ASTM C1325; 1/2 in. thick and in maximum lengths available to minimize end-to-end butt joints; Provide one of the following:

   1. "Durock Cement Board" (U.S. Gypsum Co.).
   2. "PermaBase" (National Gypsum Co.).
   3. "Wonder-Board" (Custom Building Products).
   4. "Util-A-Crete Concrete Backer Board" (FinPan, Inc.).

2.4 FASTENERS

A. Metal Framing to Structure: Power driven fasteners providing not less than 200 lbf. pull-out strength and 700 lbf. ultimate shear strength.

B. Steel Drill Screws for Cementitious backer Board Systems: ASTM C1002, Type G, Type S, or Type W screws, and suitable for fastening into steel not greater than 20 gauge thickness. ASTM C954, for fastening into steel of 20 gauge to 12 gauge thickness. Pan head for metal to metal connections. Bugle head for fastening cementitious backer board.

C. Concrete and Masonry: For securing to concrete or masonry use 9 gauge case- hardened and quenched steel nails of sufficient length to provide permanent fastening.

D. Other Applications: For other applications involving cementitious backer board comply with cementitious backer board manufacturer's printed recommendations.

E. Fasteners for Cementitious Board: For fastening cementitious backer units use corrosion resistant coated steel drill screws of size and type recommended by board manufacturer.

2.5 AUXILIARY MATERIALS

A. Joint Treatment Materials: Provide joint treatment materials complying with ASTM C475 and the recommendations of both the manufacturers of sheet products and of joint treatment materials for each application shown.

B. Water: Clean and free of deleterious material.

PART 3 - EXECUTION

3.1 GENERAL

A. Manufacturer's Instructions: Prepare substrates and install the work of this Section, including components, and accessories in accordance with the manufacturer's instructions, except where more stringent requirements are shown or specified, and where project conditions require extra precautions or provisions to ensure satisfactory performance of the Work.

3.2 EXAMINATION

A. Verification of Conditions: Examine the areas to receive the Work and the conditions under which the Work would be performed. Contractor shall remedy conditions detrimental to the proper and timely completion of the Work. Do not proceed with the Work until unsatisfactory conditions have been corrected.

3.3 PREPARATION

A. Substrate Acceptability: Commencement of installation shall constitute acceptance of substrate conditions by the Installer.

3.4 INSTALLATION, GENERAL

A. Application Requirements

1. Cementitious backer Board: Install cementitious backer board and accessories in accordance with ASTM C840, unless otherwise shown or specified. Install cementitious backer panels with face side out. Do not install imperfect, damaged, or damp panels.

2. Metal Stud: Install metal stud components in accordance with ASTM C754, unless otherwise shown or specified. Space metal studs maximum of 16 in. o.c., unless otherwise shown. Install steel studs so flanges point in the same direction and leading edge or end of each cementitious backer board panel can be attached to open (unsupported) edges of stud flanges first.

B. Framing

1. Isolate framing from building structure to prevent transfer of loading imposed by structural movement both horizontally and vertically, at the following locations:

   a. Where edges of suspended ceilings abut building structure horizontally at ceiling perimeters or penetration of structural elements.

   b. Where partition and wall framing abuts overhead structure. Provide slip or cushioned type joints to attain lateral support and avoid axial loading.

2. Do not bridge building expansion and control joints with steel framing or furring members; independently frame both sides of joints with framing or furring members.

3. Install runner tracks at floors, ceilings and structural walls and columns where stud system abuts other work, except as otherwise indicated. Install fasteners a maximum of 2 in. from each corner and end of tracks. Terminate partition stud system at structure above except where otherwise indicated.

4. Provide steel studs at door openings in accordance with the following:

   a. Two 20 gauge (minimum unless project conditions required heavier gauge) studs at each jamb and one additional stud no more than 6 in. from jamb studs schedule:

   b. Provide runner track and typical studs above door openings with studs spaced not more than 16 in. o.c.

   c. At welded frames with fixed anchor clips secure stud reinforcing to jamb anchor clips with not less than two self tapping screws per clip.

   d. Provide additional framing, reinforcing and bracing at door head locations as required to provide a rigid installation. Bracing shall be attached to structural elements, beams, slabs, etc. Attachment to mechanical or electrical components will not be permitted

5. Provide additional framing, reinforcing and blocking as required to support cementitious backer board at openings and cutouts and to support built-in anchorage, support fixtures, equipment services, heavy trim, grab bars, toilet accessories, furnishings, or similar construction and attachment devices for other work.

3.5 CEMENTITIOUS BACKER BOARD INSTALLATION

A. Use as substrate for ceramic tile and elsewhere as shown.

B. Pre-cut board to required sizes, making necessary cut-outs. Fasten boards to studs with screws spaced not more than 8 in. center to center. Apply 2 in. wide fiberglass reinforcement tape over joints and corners; embed with mortar or adhesive used to set tile.

3.6 INSTALLATION OF CHASES

A. Align two parallel rows of floor and ceiling runners and secure as hereinbefore specified for partitions. Position metal studs vertically in runners, 16 in. o.c. and secure to runners with screws. Brace studs with 2-1/2 in. metal studs installed horizontally at 48 in. o.c. Install cementitious backer board as specified for partitions.

3.7 GENERAL FINISHING REQUIREMENTS

A. Level 2 Finish for Cementitious Backer Board Utilized as Substrate for Ceramic Tile or Other Tile Like Finishes: In areas scheduled for installation of ceramic tile or other tile like finishes, finish Cementitious Backer board in accordance with ASTM C840, Level 2, unless otherwise shown or specified. Level 2 consists of embedding the tape in joint compound at joints and angles and applying (1) one separate coat of joint compound over joints, angles, fastener heads, and flanges of trim accessories. Panel surfaces and joint compound must be smooth and free of tool marks and ridges.

1. For Cementitious backer board to receive paint finish only, provide additional, continuous skim coat of joint compound over all exposed surfaces.

B. Acoustical Sealant: Fill openings around cutouts, penetrations and other openings with acoustical sealant.

C. Reinforcement: Reinforce joints at tapered edges and interior corners with joint reinforcing tape set in joint compound in accordance ASTM C840, levels of finish as specified.

D. Installation of Metal Trim: For trim accessories with back flanges, fasten to framing with the same fasteners used to fasten cementitious backer board.

3.8 FIELD QUALITY CONTROL

A. Contractor's Quality Control Responsibilities: Contractor is solely responsible for quality control of the Work.

B. Tolerances

1. Lightgauge framing within 1/8 in. in 10 ft. (non-cumulative) for plumbness and level, +/- 1/8 in. for fastening surfaces of adjacent framing members and for deviation from specified spacing.

2. Finish board surfaces within 1/4 in. in 10 ft. (non-cumulative) for plumb, level, warp and bow.

3. Finish board surfaces within+/- 1/4 in. from plan location.

4. Finish board surfaces within 1/16 in. between planes of board faces.

C. Testing for STC Ratings: Conduct Sound Transmission Class field ratings tests in accordance with ASTM E336 for partitions in sound controlled spaces where shown. The Engineer may designate similar sized spaces, in lieu of those shown, for conducting STC testing.

3.9 CLEANING

A. Clean-Up: Remove cementitious backer board debris and leave floors broom clean. Excess material, scaffolding, tools and other equipment are to be removed upon completion of the Work.

3.10 PROTECTION

A. General: Protect fixtures, frames, inserts and other contiguous work from rusting, soiling or clogging due to cementitious backer board installation. Protect and maintain the work through the construction period so that it will be without indication of damage at the time of acceptance by the Engineer.

B. Remove and replace panels that are wet, moisture damaged, and mold damaged.

1. Indications that panels are wet or moisture damaged include, but are not limited to, discoloration, sagging, or irregular shape.

2. Indications that panels are mold damaged include, but are not limited to, fuzzy or splotchy surface contamination and discoloration.

END OF SECTION

SECTION 09 67 00 – FLUID APPLIED FLOORING

PART 1 - GENERAL

1.1 SUMMARY

A. General: Provide fluid applied flooring in accordance with requirements of the Contract Documents.

B. Related Work Specified Elsewhere

1. Sealants and joint fillers installed at interface of fluid applied flooring are specified under Section 07 92 50 “Joint Sealants”.

1.2 REFERENCES

A. General: Comply with the applicable provisions of the references, except as modified by governing codes and the Contract Documents. Where a recommendation or suggestion occurs in the referenced standards, such recommendation or suggestion shall be considered mandatory. In the event of conflict between referenced standards, this specification or within themselves, the more stringent standard or requirement shall govern

1. American Society for Testing and Materials (ASTM): ASTM C811 “Standard Practice for Surface Preparation of Concrete for Application of Chemical- Resistant Resin Monolithic Surfacing”

1.3 SUBMITTALS

A. Product Data: Provide manufacturer's data sheets or equivalent printed literature, specifications, substrate preparation, installation instructions and other data indicating product information correlated to specified requirements and as may be required to show compliance with the Contract Documents.

B. Samples: Label samples to indicate product, characteristics, and location in the Work. Samples will be reviewed for color and appearance only. Furnish sufficient samples to establish the full range of colors and textures for materials exposed in the finished work. Compliance with other requirements is the responsibility of the Contractor Submit samples of each type of fluid applied flooring specified in colors as selected. Samples shall be 12 in. square, on plywood and shall show the various stages of installation.

C. Quality Control Submittals: Submit the following:

1. Test Reports

a. Material Test Reports: Material test reports for each fluid applied flooring system and component showing compliance with Contract Documents.

D. Closeout Submittals: Submit the following:

1. Warranties: Special warranties as specified.

2. Maintenance Instructions: Provide two (2) copies of manufacturer's written instructions and recommendations for maintenance and cleaning of each type of fluid applied flooring system.

1.4 QUALITY ASSURANCE

A. Single Source Responsibility: Obtain primary fluid applied flooring materials including primers, resins, waterproofing membranes, hardening agents, finish or sealing coats from a single manufacturer with not less than five (5) years of successful experience in supplying principal materials for work of type and extent shown and described in this section. Provide secondary materials only of type and from source recommended by manufacturer of primary materials.

B. Installer: The entity performing the work of this section must, within the last five (5) consecutive years prior to the bid opening have successfully completed in a timely fashion at least three (3) projects similar in scope, size and type to the required work. Only persons trained by resinous flooring manufacturer for applying specified systems indicated may be used.

C. Regulatory Requirements: Comply with applicable requirements of the laws, codes, ordinances and regulations of Federal, State and Municipal authorities. Obtain necessary approvals from the NYC Building Department.

D. Mock-Up(s): Following approval of samples, construct visual mock-ups, extent as shown or if not shown, a minimum of 100 ft2, consisting of specified fluid applied flooring system(s) to simulate final conditions. Alter or revise mock-up(s) as directed, to the complete satisfaction of the City of New York, at which time they shall remain as the standard of workmanship for the Project. Mock-up(s), if approved, may be utilized in the final work.

E. Pre-Installation Meeting: Prior to the installation, meet at the project site to review the material selections, substrate preparations, installation procedures, substrate compliance with manufacturer’s requirements for moisture vapor transmission, coordination with other trades, special details and conditions, standard of workmanship, and other pertinent topics related to the Work.

1.5 DELIVERY, STORAGE AND HANDLING

A. Packing, Shipping, Handling, and Unloading: Deliver materials in manufacturer's standard unopened packaging, fully identified.

B. Storage: Store materials above grade and protected from the weather, soiling or damage. Store in accordance with manufacturer's instructions.

1.6 PROJECT/SITE CONDITIONS

A. Requirements: Comply with resinous flooring manufacturer's directions for maintenance of substrate temperatures, ventilation, and other conditions required to execute and protect work. Provide permanent lighting or, if permanent lighting is not in place, simulate permanent lighting conditions

during fluid applied flooring application. Close spaces to traffic during fluid applied flooring application and for not less than 24 hours after application, unless manufacturer recommends a longer period

1.7 WARRANTY

A. Warranty specified in this Article shall not deprive the City of New York of other rights the City of New York may have under other provisions of the Contract Documents and are in addition to and run concurrent with other warranties made by the Contractor under requirements of the Contract Documents.

1. Special Warranty: Upon completion of the fluid applied work, provide, manufacturer's and Contractors written extended warranty stating that the fluid applied flooring systems installed will be waterproof and free from defects including but not limited to delamination and wear through for a period of not less than two (2) years from date of final acceptance and that in the event that defects or leaks occur within the period stipulated, the Contractor shall, at the convenience of the City of New York, effect repairs and replacements necessary to remedy defects.

PART 2 - PRODUCTS

2.1 MATERIALS

A. Fluid Applied Flooring (**RMX-01**): A seamless multi-component flooring system consisting of a primer, a reinforced waterproof membrane, a trowel applied cementitious body coat, fillers and a finish color sealer topcoat complete with troweled-in graded aggregate. Minimum total thickness: 3/16 in. Color: LIGHT Grey. Provide one of the following:

1. “Permalith MER with Epo-Flex Waterproofing Membrane” (General Polymers).
2. "Traffic Membrane I with Waterproofing Membrane " (Selby Ucrete, Division of Degussa Building Systems).
3. "Dex-O-Tex, M-E Floor with Waterproofing Membrane " (Crossfield Products Corp.).
4. or approved equal.

B. Metal Edge Strips: Mill finished stainless steel, AISI Type 302, of standard design. Provide concealed anchorage type unless otherwise shown.

C. Color: Colors of each type of fluid applied flooring shall be custom to match Engineer’s sample.

PART 3 - EXECUTION

3.1 GENERAL

A. Manufacturer's Instructions: Prepare substrates, apply primers and apply the work of this Section, including components, and accessories in accordance with the manufacturer's instructions, except where more stringent requirements are shown or specified, and where project

conditions require extra precautions or provisions to ensure satisfactory performance of the Work

3.2 EXAMINATION

A. Verification of Conditions: Examine the areas to receive the Work and the conditions under which the Work would be performed. Remedy conditions detrimental to the proper and timely completion of the Work. Do not proceed until unsatisfactory conditions have been corrected

B. Repair: Repair damaged and deteriorated concrete and verify that concrete substrates are dry.

3.3 PREPARATION

A. Substrate Acceptability: Commencement of installation shall constitute acceptance of substrate conditions by the Installer.

B. Concrete Surfaces: Comply with ASTM C811 "Standard Practice for Surface Preparation of Concrete for Application of Chemical-Resistant Resin Monolithic Surfacings".

1. Concrete Preparation: Clean and prepare the substrate so that it is free of laitance, glaze, efflorescence, curing compounds, form-release agents, dust, dirt, grease, oil, and other contaminants incompatible with resinous flooring. Grind and fill concrete surfaces as required to meet pre-installation tolerances. Mechanically scarify concrete substrate by sandblasting, grinding or portable shot blast cleaning system as may be required to provide a proper surface or to remove curing compounds or other surface contaminants that would interfere with proper bond of system.

2. Concrete Testing: Verify that concrete substrates are dry. Perform moisture in concrete test in accordance with ASTM F1869, “Standard Test Method for Measuring Moisture Vapor Emission Rate of Concrete Subfloor Using Anhydrous Calcium Chloride Moisture Emissions Test.” Proceed with application only after testing indicates moisture vapor transmission levels are in accordance with manufacturer’s recommendations. Proceed with application only after substrates pass testing.

3. Ph Testing: Verify that concrete substrates have neutral Ph and that resinous flooring will adhere to them. Perform tests recommended by manufacturer. Proceed with application only after substrates pass testing

C. Primer: Apply primer and bonding agent to substrates. Coordinate timing of primer application with application of topping mix to insure optimum adhesion between resinous flooring materials and substrate.

D. Coordination: Coordinate the installation of fluid applied flooring with floor drains, equipment bases, curbs and other adjacent work. Mask adjacent work to prevent soil marks.

3.4 INSTALLATION

A. General: The mixing, placing, finishing and curing of the fluid applied flooring shall produce a uniform monolithic wearing surface of thickness required, uninterrupted except at divider strips, sawn joints or other types of joints (if any), indicated or required. Treat control joints and other nonmoving substrate cracks to prevent cracks from reflecting through fluid applied flooring. Coordinate application of components to provide optimum adhesion of resinous flooring system to substrate, and optimum intercoat adhesion

B. Waterproof Membrane: Where indicated or required, apply monolithic reinforced waterproof membrane on entire floor and vertically on walls or curb to form minimum 4 in. high room perimeter.

C. Troweled Application of Topping Mix: Trowel-apply topping mix including fine aggregates or fillers over freshly applied primer in number of coats and at spreading rates required to produce minimum thickness required Check thickness at frequent and regular intervals. Perform finish troweling as work proceeds. Remove trowel marks by power sanding.

D. Grout Coat: If required, after topping mix has cured sufficiently, apply grout coat of type required to fill topping mix in number of coats and spreading rates to produce a uniform surface.

E. Finish or Sealing Coat: Apply finish or sealing coats of type required to produce non-slip finish.

F. Cove Base: Apply floor system to wall surfaces at locations shown to form base with cove or radius shown and a height of 4 in. unless otherwise indicated. Apply prior to installation of floor surfaces. Round interior and external corners.

G. Edge Strip Installation: Install metal edge strips in continuous lengths at edges of fluid applied flooring and bases, unless otherwise shown. Anchor strips solidly to substrate with countersunk non-magnetic stainless steel screws; space anchors 1 in. from each end and not more than 9 in. on centers at intermediate points. Install strips before priming substrate.

H. Extend flooring into recesses, floor drain, over mechanical equipment bases, and under equipment in the spaces shown to receive fluid applied flooring. Include integral cove bases, raised bases and depressions to form a complete monolithic covering without interruptions or seams. Place and finish flooring neatly around obstructions, in a manner that will achieve uniform color and texture throughout.

I. Patch fluid applied flooring applied over equipment boxes following equipment installation, as required to maintain monolithic waterproof integrity.

J. Provide non-slip textures where indicated. Provide colors and textures as selected by the Engineer.

K. Curing: Cure resinous flooring materials taking care to prevent contamination during stages of application and prior to completion of curing process.

3.5 FIELD QUALITY CONTROL

A. Contractor's Quality Control Responsibilities: Contractor is solely responsible for quality control of the Work.

B. Core Sampling: When directed at locations designated, take 1 core sample per 1000 $ft.^2$ of resinous flooring, or portion of, to verify thickness. For each sample that fails to comply with requirements, take two additional samples. Repair damage caused by coring and correct deficiencies.

3.6 CLEANING

A. After curing, but not more than 4 days before acceptance or occupancy by the City of New York, clean flooring as recommended by the manufacturer. Remove masking and soiling from adjacent work.

3.7 PROTECTION

A. Protect fluid applied flooring throughout the construction period so that it will be without indication of use or damage at the time of acceptance by the City of New York.

END OF SECTION

SECTION 09 90 00 – PAINTS AND COATINGS

PART 1 - GENERAL

1.1 SUMMARY

A. General: Provide paints and coatings in accordance with requirements of the Contract Documents.

1. Examine the requirements of the other technical Sections as to the location, extent and nature of painting work specified therein and include such items to be painted under this Section as are not included in the other Sections.

2. In general, paint exposed surfaces except surfaces noted as pre-finished or not to be painted. Where items or surfaces are not specifically mentioned, paint the same as adjacent materials or areas. Specifically, "Paint" includes substrate preparation, coating systems materials, primers, emulsions, enamels, stains, sealers and fillers, and other applied materials whether used as prime, intermediate, or finish coats.

B. Related Work Specified Elsewhere

1. Factory finished items and equipment.

2. Shop prime painting of miscellaneous metals fabrications is specified under Section 05 50 00 “Metal Fabrications”.

3. Shop prime painting of steel doors and frames is provided under Section 08 11 13 “Hollow Metal Doors and Frames”. Finish painting is provided under this Section.

4. Mechanical and electrical components and assemblies are provided under Divisions 21, 22, 23 and Divisions 26, 27, 28 respectively. Finish painting of mechanical and electrical components and assemblies is provided under this Section.

1.2 REFERENCES

A. General: Comply with the applicable provisions of the referenced standards except as modified by governing codes and the Contract Documents. Where a recommendation or suggestion occurs in the referenced standards, such recommendation or suggestion shall be considered mandatory. In the event of conflict between referenced standards, this specification or within themselves, the more stringent standard or requirement shall govern.

1. The Society for Protective Coatings (SSPC)

   a. SSPC Volume 1 "Good Painting Practice".

   b. SSPC Volume 2 "Systems and Specifications".

2. The Painting and Decorating Contractors of America (PDCA): PDCA “Specification Manual”.

3. American Society for Testing and Materials (ASTM):

   a. ASTM D4261 “Practice for Surface Cleaning Unit Masonry for Coating”.

   b. ASTM D523: “Test Method for Specular Gloss”.

4. Code of Federal Regulations: “40 CFR 59, Subpart D-2002: National Volatile Organic Compound Emission Standards for Architectural Coatings”.

1.3 DEFINITIONS

A. General: Standard Coating Terms and Specular Gloss Range: Standard coating terms and gloss ranges are defined as follows:

1. Flat refers to a lusterless or matte finish with a gloss range below 15 when measured at an 85-degree meter.

2. Eggshell refers to low-sheen finish with a gloss range between 20 and 35 when measured at a 60-degree meter.

3. Semigloss refers to medium-sheen finish with a gloss range between 35 and 70 when measured at a 60-degree meter.

4. Full gloss refers to high-sheen finish with a gloss range more than 70 when measured at a 60-degree meter.

1.4 SUBMITTALS

A. Product Data: Submit for Engineer’s action. Submit manufacturer’s data for each paint system specified, including block fillers and primers indicating product information correlated to specified requirements. Provide the manufacturer's technical information including label analysis and instructions for handling, storage, and application of each material proposed for use. List each material and cross-reference the specific coating, finish system, and application. Identify each material by either by the actual formula or the manufacturer's catalog and/or code number and general classification as suitable for duplication and replacement purposes.

B. Samples: Submit for Engineer’s action. Label samples to indicate product, characteristics, and location in the Work. Samples will be reviewed for color and appearance only. Furnish sufficient samples to establish the full range of colors and textures for materials exposed in the finished work. Compliance with other requirements is the responsibility of the Contractor. Provide two (2) 12 in. x 12 in. samples on hardboard substrate, for each color, sheen and texture duplicated to simulate final conditions. Show various stages of finish on displays.

C. Detailed Painting Schedule: Submit for Engineer’s information. Prepare a "Detailed Painting Schedule" on the basis of the surfaces, types of paint materials, number of coats required, and list the brand name of the product of the manufacturer proposed for each use. Use same designations indicated on Drawings and in schedules. Indicate each material and cross-reference specific coating, finish system, and application with identification related by manufacturer's catalog number and general classification.

D. Quality Control Submittals: Submit for Engineer’s information.

1. Certificates

a. Document Review: Before commencing work, submit a written statement signed by the Contractor and the Applicator certifying that the Contract Documents, shop drawings and product data have been reviewed with material manufacturers' qualified technical representatives and that they agree the selected materials are proper, compatible with contiguous materials and adequate for the application shown.

E. Closeout Submittals: Submit for City of New York’s documentation.

1. Maintenance Manuals: Two (2) copies of maintenance manuals describing the materials, devices and procedures to be followed in cleaning and maintaining the various paint and coating systems including specific precautions.

2. Color Formula List: Submit a list of each finish color and paint system type for coatings applied on exposed surfaces in the Work. Identify each color either by the actual formula or by manufacturer’s code number, as suitable for duplication and replacement purposes.

1.5 QUALITY ASSURANCE

A. Applicator Qualifications: The entity performing the work of this section must, within the last five (5) consecutive years prior to the bid opening have successfully completed in a timely fashion at least three (3) projects similar in scope, size and type to the required work.

B. Paint Manufacturer Single-Source Responsibility: Provide primers, fillers and undercoat paint produced by the same manufacturer as the finish coats.

1. Material Quality: Provide the manufacturer's best quality trade sale paint material of the various coating types specified. Paint material containers not displaying manufacturer's product identification will not be acceptable. Proprietary names used to designate colors or materials are not intended to imply that products named are required or to exclude equal products of other manufacturers.

C. Regulatory Requirements: Comply with applicable requirements of the laws, codes, ordinances and regulations of Federal, State and Municipal authorities. Obtain necessary approvals from the NYC Building Department.

D. Mock-Up(s) (Benchmark Samples)

1. Provide mock-up(s) consisting of full-coat benchmark finishes for each type of coating and substrate required after approval of paint samples, totaling approximately 100 $ft.^2$ each in spaces designated by the Engineer for final review. Duplicate finish of approved sample Submittals.

2. Apply benchmark finishes, according to requirements for the completed Work, after permanent lighting and other environmental services have been activated. Provide required sheen, color, and texture on each surface. After finishes are accepted, Engineer will use the room or surface to evaluate coating systems of a similar nature.

E. Pre-Installation Meeting: Prior to the start of the Work, meet at the Project site to review methods and sequence of Work, special details and conditions, standard of workmanship, and other pertinent topics related to the Work. Review other areas of the Work in which primers are provided to ensure compatibility of the total systems for various substrates.

1.6 DELIVERY, STORAGE, AND HANDLING

A. Packing, Shipping, Handling and Unloading: Deliver paint materials to the job site in original containers and packages, bearing the manufacturer's labels, indicating name, type, brand, color name and number, application instructions, contents by volume, for pigment, vehicle and volatile constituents. Unless otherwise directed, deliver paints ready-mixed. Order in advance in large enough quantities and in ample time to facilitate the Work.

B. Storage and Protection: Store materials and equipment in a designated storage space on the site. Protect paint and associated materials from freezing. Keep storage space neat, clean and accessible at all times. Protect floors from paint spillage. Remove oily rags and waste daily. Take necessary measures to ensure that workers and work areas are protected from fire and health hazards resulting from handling, mixing, and application.

1.7 PROJECT/SITE CONDITIONS

A. Requirements

1. Do not paint when the air is dust-laden nor when weather and temperature conditions are unsuitable. Maintain temperatures within the building at a minimum of 60 deg. F. during the painting and drying periods.

2. Apply paint only when the temperature of surfaces to be painted and surrounding air temperatures are between 50 deg. F. and 90 deg. F. Comply with manufacturer's recommendation when they are more stringent with respect to application temperatures.

3. Do not apply paint in snow, rain, fog, or mist; or when the relative humidity exceeds 85%; or at temperatures less than 5 deg. above the dew point; or to damp or wet surfaces. Comply with manufacturer's recommendation when they are more stringent with respect to application temperatures.

4. Painting may continue during inclement weather if surfaces and areas to be painted are enclosed and heated within temperature limits specified by the manufacturer during application and drying periods.

PART 2 - PRODUCTS

2.1 MATERIALS

A. Material Compatibility: Provide block fillers, primers, finish coat materials, and related materials that are compatible with one another and the substrates indicated under conditions of service and application, as demonstrated by the manufacturer based on testing and field experience.

B. Paint Materials: Subject to compliance with requirements, provide materials of the following manufacturers or approved equal:

Exterior

Carboline Co.

Tnemec

Ameron

DuPont

Akzo Nobel (ICI Paints)

Interior

Benjamin Moore

PPG

Sherwin-Williams

Glidden Pro

MAB Paints

Akzo Nobel (ICI Paints)

Martin Senour Paints

Pratt & Lambert

C. Use products of the same manufacturer for succeeding coats. Where primer is shop applied to steel, subsequent coats may be the product of another manufacturer provided the coatings are mutually compatible. Review other sections in which primers are provided to ensure compatibility of the total systems for various substrates.

D. Chemical Components of Field-Applied Interior Painting: Provide products that comply with the following limits for VOC content, exclusive of colorants added to a tint base, when calculated according to 40 CFR 59, Subpart D (EPA Method 24) and the following chemical restrictions; these requirements do not apply to primers or finishes that are applied in a fabrication or finishing shop:

1. Flat Paints and Coatings: VOC content of not more than 50 g/L.
2. Nonflat Paints and Coatings: VOC content of not more than 150 g/L.
3. Primers, Sealers and Undercoaters: VOC content of not more than 200 g/L.
4. Anticorrosive Coatings: VOC content of not more than 250 g/L.

5. Zinc Rich Industrial Maintenance Primers: VOC content of not more than 340 g/L.
6. Pretreatment Wash Primers: VOC content of not more than 420 g/L.
7. Floor Coatings: VOC content of not more than 100 g/L.
8. Aromatic Compounds: Paints and coatings shall not contain more than 1.0 percent by weight of total aromatic compounds (hydrocarbon compounds containing one or more benzene rings).
9. Restricted Components: Paints and coatings shall not contain any of the following chemicals nor other restricted components and/or chemicals not in compliance with governing authorities:
    a. Acrolein.
    b. Acrylonitrile.
    c. Antimony.
    d. Benzene.
    e. Butyl benzyl phthalate.
    f. Cadmium.
    g. Di (2-ethylhexyl) phthalate.
    h. Di-n-butyl phthalate.
    i. Di-n-octyl phthalate.
    j. 1,2-dichlorobenzene.
    k. Diethyl phthalate.
    l. Dimethyl phthalate.
    m. Ethylbenzene.
    n. Formaldehyde.
    o. Hexavalent chromium.
    p. Isophorone.
    q. Lead.
    r. Mercury.
    s. Methyl ethyl ketone.
    t. Methyl isobutyl ketone.
    u. Methylene chloride.
    v. Naphthalene.
    w. Toluene (methylbenzene).
    x. 1,1,1-trichloroethane.
    y. Vinyl chloride.

E. Colors, textures and degree of luster will be as selected by the Engineer. Tint prime and undercoats approximately to the shade of the final coat but with sufficient variation to distinguish them from the preceding coat. Proprietary names used to designate colors or materials are not intended to imply that products named are required or to exclude equal products of other manufacturers.

F. In locations where ambient temperature-humidity conditions encourage the ready formation of mildew, use paints with additional mildew inhibitive agent incorporated during the manufacturing process, of type and in concentration recommended by the paint manufacturer to withstand such mildew formation.

PART 3 - EXECUTION

3.1 GENERAL

A. Manufacturer's Instructions: Prepare substrates, apply primers and apply the work of this Section, including equipment, components, and accessories in accordance with the manufacturer's instructions, except where more stringent requirements are shown or specified, and where project conditions require extra precautions or provisions to ensure satisfactory performance of the Work.

3.2 EXAMINATION

A. Verification of Conditions: Examine the areas to receive the Work and the conditions under which the Work would be performed. Remedy conditions detrimental to the proper and timely completion of the Work. Do not proceed until unsatisfactory conditions have been corrected

3.3 PREPARATION

A. Substrate Acceptability: Commencement of installation shall constitute acceptance of substrate conditions by the Installer.

B. Surface Preparation, General

1. Prepare surfaces to receive paint; thoroughly clean of grime, grease, dirt, loose material and other substances that may interfere with proper adhesion of paint. Provide barrier coats over incompatible primers or remove and reprime. Paint dry surfaces only.

2. Remove or protect hardware, hardware accessories, plates, signs, trim for mechanical work, machined surfaces, lighting fixtures and similar items in place and not to be finish painted. Disconnect and move equipment adjacent to areas scheduled to be painted. Reposition and reconnect items and remove protection upon completion of each space.

3. Cleaning: Before applying paint or other surface treatments, clean the substrates of substances that could impair the bond of the various coatings. Remove oil and grease prior to cleaning. Schedule cleaning and painting so dust and other contaminants from the cleaning process will not fall on wet, newly painted surfaces.

4. Fill dents, cracks, hollow places, open joints and other irregularities with a filler suitable for the purpose and, after setting, sand to a smooth finish.

5. Prime surfaces not more than 8 hours after cleaning except as otherwise specified by the prime paint manufacturer.

C. Metals, Surface Preparation

1. General: Clean bare metal surfaces thoroughly of foreign matter such as mortar, plaster, grease, rust, scale and dirt before priming coat is applied. Remove oil, grease and similar contaminants in accordance with SSPC SP-1 "Solvent Cleaning", prior to additional surface preparation specified. Remove rust and mill scale in accordance with SSPC SP-3 "Power Tool Cleaning". Where solder flux has been used, clean surface with solvent, or use mechanical tools to remove. Immediately after surface preparation, apply primer in accordance with manufacturer's instructions. Use painting methods which will result in full coverage and dry film thickness specified. After erection is completed, touch-up heads of bolts, welded surfaces and other field connections with specified primer.

2. Shop Primed Ferrous Metal Surfaces: Remove grease and oil with a cleaner recommended for the purpose.

a. For exterior exposed steel, follow cleaning by abrading all epoxy shop coated surfaces as recommended by manufacturer to provide a proper bonding surface for finish coat. Exercise care to prevent damage to shop coat. Touch-up abraded or marred shop coats with paint used for priming or "universal primer" compatible with primer, topcoat, and field surface preparation.

3. Zinc Coated (Galvanized), Aluminum and Stainless Steel Surfaces: Remove grease and oil with a cleaner recommended for the purpose. Treat and roughen surfaces using either mechanical or chemical means. When chemical compound is used rinse the chemical compound completely with clean, fresh water.

D. Concrete and Masonry Surface Preparations: Delay painting on concrete or masonry surfaces as long as practicable within the limits of the Contract. Test surfaces for presence of alkali and neutralize as required. Test surfaces for moisture content and do not paint surfaces which exceed manufacture's printed instructions. Remove grease, oil, form release agents and efflorescence. Patch cracks and other blemishes to be covered by paint. Neutralize concrete surfaces which have received capillary waterproofing, utilizing materials and methods as recommended by the manufacturer and applicator of the capillary waterproofing.

1. Block Fillers: Apply block fillers to concrete masonry block at a rate to ensure complete coverage with pores filled in accordance with manufacturer's instructions.

2. Clean concrete floors to be painted with a 5% solution of muriatic acid or other etching cleaner. Flush the floor with clean water to remove acid, neutralize with ammonia, rinse, allow to dry, and vacuum before painting.

E. Pipe Covering and Insulation, Surface Preparation: Clean surfaces of pipe, duct and equipment insulation (such as canvas jackets and troweled-on insulation), of loose, foreign and objectionable material prior to priming or sealing.

3.4 WORKMANSHIP

A. General: Use applicator and techniques best suited for substrates and type of material being applied. Apply materials at not less than recommended spreading rate to establish a total dry film thickness as indicated or, if not indicated, as recommended.

B. Mix materials thoroughly before application to produce a mixture of uniform density; strain if necessary, before using. Do not mix surface film into material. If necessary, remove surface film and re-strain material before using. Do not adulterate ready- mixed materials except in accordance with the manufacturer's printed instructions. If no printed instructions appear on the container, obtain this information in writing from the manufacturer. Use only approved thinners and only within recommended limits.

C. Tinting: Tint each undercoat a lighter shade to facilitate identification of each coat where multiple coats of the same material are applied. Tint undercoats to match the color of the finish coat, but provide sufficient differences in shade of undercoats to distinguish each separate coat.

D. Apply materials with care to a uniform and proper film thickness, showing no runs, holidays, sags, crawls or other defects. Apply with a minimum of brush marks. Finish surfaces shall be uniform in sheen, color and texture.

E. Application Procedures: Apply paints and coatings by brush, roller, spray, or other applicators as follows:

1. Brushes: Use brushes best suited for the material applied.

2. Rollers: Use rollers of carpet, velvet back, or high-pile sheep's wool for the material and texture required.

3. Spray Equipment: Use airless spray equipment with orifice size for the material and texture required.

F. The number of coats and the film thickness required are the same regardless of the application method. Do not apply succeeding coats until the previous coat has cured as recommended by the manufacturer. Sand between applications where sanding is required to produce a smooth even surface. Apply additional coats if undercoats, stains, or other conditions show through final coat of paint until paint film is of uniform finish, color, and appearance. Give special attention to ensure that surfaces, including edges, corners, crevices, welds, and exposed fasteners, receive a dry film thickness equivalent to that of flat surfaces.

G. Apply two thin coats of paint to bare wood surfaces in sliding contact so as not to interfere with proper operation. Do not paint other materials in sliding contact. Remove paint applied to such surfaces.

H. Paint access doors, plates, panel boxes, steel grilles, louvers, convector covers, registers, exposed prime painted hardware and the like in colors as selected. Paint back sides of access panels and removable or hinged covers to match exposed surfaces. Paint interior surfaces of ducts or piping where visible through registers or grilles with a flat, non-specular paint type appropriate to surface to be painted. Finish paint doors on tops, bottoms, and side edges the same as exterior faces. Do not paint nameplates on equipment or over Underwriter's Laboratories, Factory Mutual or other code-required labels or equipment name, identification, performance rating, or nomenclature plates.

I. Do not paint heating elements and pipes while they contain heat. Keep them cold until after the final coat has thoroughly dried.

J. Mechanical and Electrical Work: Painting of mechanical and electrical work is limited to items exposed in equipment rooms and occupied spaces.

1. Mechanical items to be painted include, but are not limited to uninsulated metal piping, uninsulated plastic piping, pipe hangers and supports, tanks that do not have factory-applied final finishes, visible portions of internal surfaces of metal ducts, without liner, behind air inlets and outlets, duct, equipment, and pipe insulation having "all-service jacket" or other paintable jacket material, and mechanical equipment that is indicated to have a factory-primed finish for field painting.

2. Electrical items to be painted include, but are not limited to, switchgear, panelboards and electrical equipment that is indicated to have a factory-primed finish for field painting.

K. Allow coats to dry and cure thoroughly before succeeding coats are applied; allow a minimum of 24 hours between applications on any one surface unless otherwise specified by the manufacturer.

L. Sandpaper undercoats on interior metal thoroughly and uniformly to provide a smooth, even surface for finish coats.

M. Surfaces given a prime or body coat of paint under other sections of these specifications will not require such coats of paint under this specification section. Repair existing prime coatings with same primer or undercoat unless otherwise specified.

N. Furnish competent technical assistance by the paint manufacturer on the job to ensure proper application of his material.

O. When using paint with additional mildew inhibitive formulation, observe the procedures and precautions in the paint manufacturer's printed instructions for the use of this product.

3.5 SCHEDULE OF EXTERIOR PAINTS AND COATINGS

A. General: Paint exterior surfaces exposed to view in accordance with this Schedule of Exterior Paints and Coatings, except as specifically shown or specified.

B. Metals

1. Ferrous Metal

a. With Zinc Rich Primer: Compatible with, and of the same manufacturer as, the primer. Provide the respective dry film thickness specified; satin gloss finish coat; one of the following:

1st coat

"Hi-Build Epoxoline II Series N69" (Tnemec Co. Inc.); 4.0 - 6.0 mils (100µm - 150µm) d.f.t.

"Carboguard 888 Series" (Carboline Co.); 4.0 - 6.0 mils

(100µm -150µm) d.f.t.

“Interseal 670HS (International Paint), 4.0- 8.0 mils min d.f.t.

Or approved equal.

2nd coat

"Carbothane 133 Series/833" (Carboline Co.). 3.0 - 5.0 mils d.f.t.

"Endura-Shield II 1075" (Tnemec Co. Inc.); 3.0 - 5.0 mils d.f.t.

“Interthane 870UHS” (International Paint), 5.0- 8.0 mils min d.f.t.

Or approved equal.

Clear top coat

Tnemec Co. Inc. “Enviro-glaze Series 297” clear coating as basis of design but not intended to imply a preference for a specific product.

Or as manufactured by Carboline Co. or International Paint.

Or approved equal.

b. Shop-Primed: Apply two coats with the manufacturer recommended dry film thickness for each coat; semi-gloss finish coats; Provide one of the following, compatible with primer:

"Endura-Shield II 1075" (Tnemec Co. Inc.); 3.0 - 5.0 mils d.f.t. "Carbothane 133 Series/833" (Carboline Co.). 3.0 - 5.0 mils d.f.t.

"Interthane 870UHS" (International Paint), 5.0- 8.0 mils min d.f.t. Or approved equal.

2. Aluminum: Compatible with the surface preparer. Provide the manufacturer recommended dry film thickness for each coat; semi-gloss finish coats, unless otherwise specified to receive Architectural Finish (AMAA 2605);

1st coat - Epoxy Primer

2nd coat - Alkyd Semi Gloss

3. Stainless Steel: Compatible with the surface preparer. Provide the manufacturer recommended dry film thickness for each coat; semi-gloss finish coats;

1st coat - Epoxy Primer

2nd coat - High Build Aliphatic Polyurethane; 3.0 - 5.0 mils d.f.t.

C. Concrete, Concrete Masonry Units

1st coat - Latex Block Filler

2nd coat - Elastomeric Acrylic Latex 3rd coat - Elastomeric Acrylic Latex

3.6 SCHEDULE OF INTERIOR PAINTS AND COATINGS

A. General: Paint interior surfaces exposed to view in accordance with this Schedule of Interior Paints and Coatings, except as specifically shown or specified.

B. Ferrous Metal

1. Metals, Shop-Primed

1st coat - Alkyd Undercoater

2nd coat - Alkyd Eggshell Enamel

2. Galvanized

1st coat - Water Based Acrylic Primer 2nd coat - Alkyd Eggshell Enamel

3. Semi-Gloss Epoxy Finish: One of the following systems: Pittsburgh Paints

1st coat - "Speedhide Primer 6-212"; 2.0 mils d.f.t.

2nd coat - "Pitt-Glaze Acrylic Epoxy"; 3.0 - 4.0 mils d.f.t. 3rd coat - "Pitt-Glaze Acrylic Epoxy"; 3.0 - 4.0 mils d.f.t.

DuPont Company

1st coat - "Tufcote 1.9 HG-D"; 2.0 - 3.0 mils d.f.t. 2nd coat - "Corlar 76P"; 2.0 - 3.0 mils d.f.t.

3rd coat - "Corlar 76P"; 2.0 - 3.0 mils d.f.t. Devoe Paints

1st coat - "Mirrolac No. 13101 "; 2.0 - 2.5 mils d.f.t.

2nd coat - "Gardcote-WB No. 25U8xx "; 2.0 - 3.0 mils d.f.t. 3rd coat - "Gardcote-WB No. 25U8xx "; 2.0 - 3.0 mils d.f.t.

Ameron

1st coat - "Amercoat A148"; 2.0 – 3.0 mils d.f.t. 2nd coat - "Amercoat A335"; 2.0 – 3.0 mils d.f.t. 3rd coat - "Amercoat A335"; 2.0 – 3.0 mils d.f.t.

Or approved equal.

C. Concrete, Concrete Masonry Units:

1. Enamel Finish

1st coat - Latex Block Filler 2nd coat - Enamel Undercoater

3rd coat - Alkyd Eggshell Enamel

2. Epoxy Finish

Pittsburgh Paints

1st coat - "Pitt-Glaze Latex Block Filler 16-90"; 12.5 mils d.f.t. 2nd coat - "Pitt-Glaze Acrylic Epoxy"; 3.0 - 4.0 mils d.f.t.

3rd coat - "Pitt-Glaze Acrylic Epoxy"; 3.0 - 4.0 mils d.f.t. DuPont Company

1st coat - "300P Acrylic Block Filler"; Apply to fill 2nd coat - "Corlar 76P"; 2.0 - 3.0 mils d.f.t.

3rd coat - "Corlar 76P"; 2.0 - 3.0 mils d.f.t. Devoe Paints

1st coat - "Blocktex Block Filler 89301"; Apply to fill

2nd coat - "Gardcote-WB No. 25U8xx"; 2.0 - 3.0 mils d.f.t. 3rd coat - "Gardcote-WB No. 25U8xx"; 2.0 - 3.0 mils d.f.t. Or approved equal.

D. Piping and Mechanical Equipment: Paint piping, pipe hangers and supports, heat exchangers, tanks, ductwork, insulation, motors, electrical conduits, switchgear and other mechanical and electrical equipment except equipment which is non-ferrous metal, plated, finished by manufacturers, permanently concealed or noted to be painted under this section. Properly clean, prepare and finish as specified. Paint materials shall be heat-resisting type when applied to heating lines and equipment.

1. Uninsulated Piping Ductwork, Fittings and Equipment 1st coat - Enamel Undercoater

2nd coat - Alkyd Eggshell Enamel

2. Insulated Piping, Ductwork, Fittings and Equipment 1st coat - Latex Flat

   2nd coat - Alkyd Semi Gloss

3. Machinery and Equipment

   1st coat - Epoxy Type Machinery Enamel 2nd coat - Epoxy Type Machinery Enamel

4. Pipe Identification

   a. Comply with ANSI A13.1 "Scheme for the Identification of Piping Systems".

   b. Provide plastic coated fabric pipe markers, all-temperature labels. Indicate the pipe contents in printed, block letters. Provide labels of such length as to completely circumscribe the pipe and overlap not less than 1 in. upon one edge.

   c. Provide flow markers consisting of labels similar to the pipe markers with a large black arrow printed on the same background color to indicate the direction of flow of material in the pipe.

   d. On each side of walls or floors through which pipes pass, place a pipe marker and a flow marker on each pipe Place markers adjacent to valves and fittings. For exposed piping locate markers to be clearly visible to a person standing on the floor.

   e. On pipes or covering 1 in. and smaller in diameter requiring identifying markings, attach metal tag of not less than 1 in. in diameter, with lettering etched and filled with enamel, in lieu of stencils.

3.7 PAINT COLOR TYPES

A. The Engineer's selection of paint colors are indicated by color type; designated "PT- ". Reference to a particular manufacturer's number or color name is used only as a convenience for the Engineer in order to establish the Project color requirements. These references are not intended to describe the required generic paint systems. For generic paint systems requirements, refer to the "Finish Schedule” as applicable to the respective conditions of use.

B. Reference to a particular manufacturer's number or color name is used only as a convenience for the Engineer in order to establish the Project color requirements. These references are not intended to describe the required generic paint systems. For generic paint systems requirements, refer to the "Finish Schedule" as applicable to the respective conditions of use.

C. Except as otherwise noted, use flat finish on ceilings and soffits, eggshell finish on walls and fascias, satin or semi-gloss finish on doors and frames, semi-gloss finish on convector covers and metal trim, and epoxy finish on ceilings and walls in wet spaces where shown or specified.

D. Samples showing color and sheen selected by the Engineer for specific items or areas specified to receive paint finishes are available for examination in the Engineer's office.

E. Color Schedule: The following schedule shall be considered as a guide only to color and sheen requirements, subject to the Engineer's modification or approval:

1. Paint Type (**PT-01** through **PT-20**): Color and Sheen as indicated on drawings “Finish Schedule”.

3.8 CITY OF NEW YORK’S MONITORING ACTIVITIES

A. City of New York’s Testing Agency: A testing agency, engaged at the City of New York’s expense, will perform the following activities to monitor the Contractor’s Quality Control Program. The monitoring activities do not relieve the Contractor of responsibilities under the Contract.

B. The City of New York reserves the right to invoke the following test procedure at any time and as often as the City of New York deems necessary during the period when paint is being applied. Samples of material delivered to the Project will be taken, identified, sealed, and certified in the presence of the Contractor.

C. The testing agency will perform appropriate tests for the following characteristics as required by the City of New York:

1. Quantitative materials analysis.
2. Abrasion resistance.
3. Apparent reflectivity.
4. Flexibility.
5. Washability.
6. Absorption.
7. Accelerated weathering.
8. Dry opacity.
9. Accelerated yellowness.
10. Recoating.
11. Skinning.
12. Color retention.
13. Alkali and mildew resistance.

D. If test results show material being used does not comply with specified requirements, the Contractor may be directed to stop painting, remove noncomplying paint, pay for testing, repaint surfaces coated with rejected paint, and remove rejected paint from previously painted surfaces if, upon repainting with specified paint, the two coatings are incompatible.

E. Contractor's Assistance to the City of New York's Testing Agency: Furnish the City of New York's Testing Agency with access to the Work, materials

and facilities as required by the Agency. Provide adequate notice of construction activities to allow timely inspections and observation of Contractor tests, and be available for pre- installation meetings. Furnish the City of New York's Testing Agency with on-site office facilities.

3.9 CLEANING

A. At the end of each work day, remove empty cans, rags, rubbish, and other discarded paint materials from the site. Remove paint spots, oil or stains upon adjacent surfaces not requiring painting and leave entire job clean.

B. Upon completion of painting, clean glass and paint-spattered surfaces. Remove spattered paint by washing and scraping, using care not to scratch or damage adjacent finished surfaces.

3.10 PROTECTION

A. Place paint or solvent soaked rags, waste or other materials which might constitute a fire hazard in metal containers and remove from premises at the close of each day's work. Take every precaution to avoid damage by fire.

B. Provide suitable coverings to protect surfaces not requiring painting. Protect work of other trades, whether to be painted or not, against damage by painting operations. Correct damage by cleaning, repairing or replacing, and repainting, as required and acceptable to City of New York.

C. Remove or protect items such as hardware, hardware accessories, plates, lighting fixtures and similar items placed prior to painting. Reposition or remove protection upon completion of each space. Disconnect equipment adjacent to walls by workmen skilled in these trades to permit painting of wall surfaces; replace and reconnect after completion of painting.

D. Maintain wrappings or other factory applied protection furnished with finish hardware (or other items provided by other trades) installed in areas where painting is required. If such protection is displaced or removed, replace before painting work continues and maintain for the duration of painting and coating work.

E. Provide "wet paint" signs to protect newly painted finishes. Remove temporary protective wrappings provided by others for protection of their work after completion of painting operations. At completion of construction activities of other trades, touch up and restore damaged or defaced painted surfaces.

END OF SECTION

SECTION 10 14 00 – SIGNAGE

PART 1 - GENERAL

1.1 SUMMARY

A. General: Provide signage in accordance with requirements of the Contract Documents and as required by New York City Building Department.

1.2 REFERENCES

A. General: Comply with the applicable provisions of the referenced standards except as modified by governing codes and the Contract Documents. Where a recommendation or suggestion occurs in the referenced standards, such recommendation or suggestion shall be considered mandatory. In the event of conflict between referenced standards, this specification or within themselves, the more stringent standard or requirement shall govern.

1. American Welding Society (AWI): AWS D1.2 "Structural Welding Code - Aluminum".
2. National Association of Architectural Metal Manufacturers (NAAMM): NAAMM "Metal Finishes Manual".
3. Industrial Fasteners Institute (IFI): "Fastener Standards Book."
4. ICC ANSI A117.1 - 2009

1.3 SYSTEM DESCRIPTION

A. Performance Criteria for Exterior Signage

1. Wind Loading Requirements: Design, fabricate and install component parts of exterior signage (either freestanding or mounted to exterior of building) so that the completed signage will withstand the inward and outward pressures normal to the plane of the sign as shown on Drawings.
2. Temperature Requirements: Design, fabricate and install exterior signage component parts to provide for expansion and contraction of the over an ambient exterior temperature range and exterior metal surface temperature of

   –10 deg. F. through +180 deg. F. without buckling, sealed joint failure, component breakage, undue stress on members or anchors, and other detrimental effects
3. Anchorage Disengagement: Anchorage disengagement or breakage shall not occur when an installed exterior signage unit is subjected to a force equal to 2.5 times the design load.

B. Design Modifications: Make design modifications of work shown only as may be necessary to meet performance requirements and coordinate the Work. Variations in details and materials which do not adversely affect appearance, durability or strength shall be submitted for review. Maintain the general design concept without altering profiles and alignments shown.

1.4 SUBMITTALS

A. Product Data: Submit manufacturer's literature, specifications and installation instructions describing the general properties of each material and accessory to be used in the Work

B. Shop Drawings: Submit shop drawings for the fabrication and installation of the Work. Prepare details at not less than 3 in. = 1 ft. minimum scale. Submit shop drawings showing component details, general arrangement, methods of anchoring, finishing details, and all other pertinent information. Include anchors, grounds, reinforcement, accessories, layout, and installation details.

1. Provide message list for each sign required, including large scale details of wording and layout of lettering.

2. For signage supported by or anchored to permanent construction, provide setting drawings, templates, and directions for installation of anchor bolts and other anchors to be installed as a unit of Work in other Sections.

3. Furnish full size spacing templates for individually mounted dimensional letters and numbers.

C. Samples: Submit and label samples to indicate product, characteristics, and location in the Work. Samples will be reviewed for color and appearance only. Furnish sufficient samples to establish the full range of colors and textures for materials exposed in the finished work. Compliance with other requirements is the responsibility of the Contractor. Submit the following:

1. Provide a sample not less than 12 in. x 12 in. x scheduled thickness for each material shown or specified in schedule. Include a sample for each color, texture, and pattern required. On each panel include a representative sample of the graphic image process required, showing graphic style, and colors and finishes of letters, numbers, and other graphic devices.

2. Dimensional Letters: Provide full-size representative samples of each dimensional letter type required, showing letter style, color, and material finish and method of attachment.

D. Quality Control Submittals: Submit for Engineer's information.

1. Test Reports

a. Submit copies of the following laboratory test reports:

1) ASTM B137 - Anodic Coating Weight

2) ASTM B244 - Anodic Coating Thickness

3) ASTM B136 - Stain Test

2. Certificates

a. Submit manufacturer's and fabricator's certification indicating that anodic coating complies with the Contract Documents.

E. Closeout Submittals: Submit for City of New York's Documentation.

1. Warranties: Special warranties as specified

2. Maintenance Manual: two (2) copies of a bound maintenance manual, describing the materials, and procedures for cleaning and maintaining each type sign and accessory item or assembly. Include manufacturer's data describing the materials and finishes used in the work.

1.5 QUALITY ASSURANCE

A. Qualified Installer: The entity performing the work of this section must, within the last five (5) consecutive years prior to the bid opening have successfully completed in a timely fashion at least three (3) projects similar in scope, size and type to the required work.

B. Single Source Responsibility: Obtain signage from one source of a single manufacturer for the entire project. Obtain accessory products used in conjunction with the work from the signage manufacturer or from sources acceptable to the signage manufacturer.

C. The entity performing the work of this section must, within the last five (5) consecutive years prior to the bid opening have successfully completed in a timely fashion at least three (3) projects similar in scope, size and type to the required work.

D. The signage shall be subject to examination by the City of New York to determine compliance with the Contract Documents. Examination may be made at the factory, upon delivery to the Project site and after installation.

E. Regulatory Requirements: Comply with applicable requirements of the laws, codes, ordinances and regulations of Federal, State and Municipal authorities. Obtain necessary approvals from the NYC Building Department.

F. Mock-Ups

1. Visual Mock-Up(s): After approval of samples, provide full size visual mock-ups for each type of signage and support, assembled to simulate final conditions in a locations in or on the building where directed. Mock-up shall be representative of the finished Work in all respects. Retain and maintain mockups during construction in an undisturbed condition as a standard for judging the completed signage Work.

2. Obtain City of New York's acceptance of mock-ups prior to start of Work. Modify mock-ups as directed until acceptance is given. After acceptance, mock-ups may be utilized in the finished Work.

G. Pre-Installation Meeting: Prior to the start of the Work, meet at the Project site to review material selections, methods and sequence of installation, special details and conditions, standard of workmanship, quality control requirements, job organization, coordination with other trades, and other pertinent topics related to the Work.

1.6 DELIVERY, STORAGE AND HANDLING

A. Packing, Shipping, Handling and Unloading: Deliver signage and components fully identified for installation complete with fastenings and accessories and protected from damage from any source. Handle signage carefully to prevent breakage, surface abrasion, denting, soiling, and other defects. Comply with the manufacturer's handling instructions for unloading components subject to damage.

B. Acceptance at Site: Inspect sign components for damage upon delivery. Do not install damaged sign components. Repair minor damage to signage, provided the finished repair is equal in all respects to the original work and is acceptable to the Engineer; otherwise remove and replace damaged sign components.

C. Storage and Protection: Protect units from damage during transit, storage and installation. Store material indoors in a dry location, off the ground. Tool marks, rust, blemishes and any other damage on exposed surfaces will not be acceptable.

1.7 WARRANTIES

A. General: Warranties and guaranties specified in this Article shall not deprive the City of New York of other rights the City of New York may have under other provisions of the Contract Documents and are in addition to and run concurrent with other warranties and guaranties made by the Contractor under requirements of the Contract Documents.

1. Special Signage Warranty: Provide a written signage warranty, for a five (5) year period, against defects of materials or workmanship. Upon notification of such defects, within the warranty period, make the necessary repairs and replacements, at the convenience of the City of New York. Failures, include but are not limited to:

   a. Failure of the system to meet specified requirements.

   b. Deterioration of metals, metal finishes coatings and other materials beyond normal weathering.

2. Special Warranty, Anodized Coatings: Provide a written Warranty, for a period of (5) five warranting that the anodized aluminum will not develop excessive fading or excessive non-uniformity of color or shade, and will not crack, peel, pit, or corrode; all within limits defined as follows:

   a. "Excessive fading": means a change in appearance which is perceptible and objectionable as determined by the Engineer when viewed visually in comparison with the original color range standards.

   b. "Excessive non-uniformity": means non-uniform fading during the period of the Warranty to the extent that adjacent panels have a color difference greater than the original acceptable color range.

c. "Will not crack, peel, pit or corrode": means there shall be no cracking, peeling, pitting or other type of corrosion discernible from a distance of 10 ft., resulting from the natural elements in the atmosphere.

d. Upon notification of such defects, within the warranty period, make the necessary replacements at the convenience of the City of New York.

PART 2 - PRODUCTS

2.1 METAL MATERIALS

A. Stainless Steel

1. ASTM A240; Provide the most suitable austenitic alloy, form and finish required to produce the Work. Provide 316 and 316L for components to be welded, unless otherwise noted.

B. General Requirements

1. Raised Copy: Signs shall be on one piece construction from matte-finish opaque sheet forming sign panel face. Produce precisely formed characters with square cut edges free from burrs and cut marks by rear embossing.

a. Raised Copy Thickness: Tactile characters/symbols shall be raised 1/32 in. from sign plate face. Signs shall be of one-piece construction; added-on and/or engraved characters are unacceptable. Text shall be accompanied by Grade 2 Braille.

2.2 FASTENERS, ANCHORS AND ADHESIVES

A. Adhesives: Types best suited for the purpose, waterproof for exterior use.

B. Pressure Sensitive Tape: Double faced tape, warrantied not to delaminate under conditions of use indicated.

C. Anchors and Inserts: Use nonferrous metal anchors and inserts for exterior installations and elsewhere as required for corrosion resistance. Use toothed steel or lead expansion bolt devices for drilled-in-place anchors. Furnish inserts, as required, to be set into concrete or masonry work.

D. Fasteners: Type best suited for the purpose intended, compatible with materials being fastened, concealed wherever possible. Where exposed in finished surfaces, color and finish to match adjacent surfaces.

2.3 FINISHES

A. General: As shown for the respective units and matching the reviewed samples. Remove scratches, abrasions, dents, die markings and other defects prior to finishing operations. Perform this work in addition to finish treatment specified. Comply with NAAMM "Metal Finishes Manual" for finish designations and application recommendations unless otherwise specified.

B. Stainless Steel

1. ASTM A240; Provide the most suitable austenitic alloy, form and finish required to produce the Work. Provide 316 and 316L for components to be welded, unless otherwise noted.

    a. Plate and Sheet: ASTM A480, Stretcher level sheets.

2. Stainless Steel Finishes

    a. No. 6 (satin directional polish).

2.4 FABRICATION

A. Field Measurements: Prior to preparation of shop drawings and starting fabrication, take field measurements to ensure proper fitting. Show recorded measurements on final shop drawings. Coordinate fabrication schedule with the work of other trades and the construction progress to avoid delay.

B. Fabricate in accordance with standard trade practices and in accordance with final shop drawings. Materials shall be single piece for each location wherever possible. Fabricate units in largest practicable sections. Assemble in the shop for trial fit, disassemble for shipment and reassemble with concealed fasteners. If design or material limitations require seaming or jointing, locate joints or seams on shop drawings for review by Engineer.

C. Reinforcing shown is minimum. Provide additional reinforcing as required to ensure a rigid assembly. Exposed surfaces shall be free from dents, tool marks, warpage, buckle, glue and open joints, or other defects affecting serviceability or appearance. Accurately fit all joints, corners and miters. Conceal all fasteners. Make threaded connections up tight so that threads are entirely concealed.

D. Lettering shall be neatly cut and applied in a straight line with uniform borders as shown. Lettering shall be properly spaced and in accordance with final shop drawings.

E. Metal Work

1. Forming: Form work to true shapes, without distortion, with accurate surfaces and edges. Unless otherwise shown, form metal corners by bending to smallest radius possible without impairing the work. Machine cut or saw material for butt jointed or square corners.

2. Assembly: Carefully fit and assemble all work with continuity of line and design, using rigidly secured joints with hairline contact, unless otherwise shown. Form butt hairline joints with roll-over edge exposed. Grind off roll- over edge flush with and matching of adjacent metal. Shop assemble all work. Disassemble units too large for shipment and provide them with alignment and splice plates for accurate field fit.

3. Welding: Weld with electrodes and by methods recommended by the base metal manufacturer, and in accordance with applicable recommendations of the AWS, to avoid distortion or discoloration of exposed faces. Make welds continuous unless otherwise

shown. Grind exposed welds flush, to match adjacent metal. Bevel cut base metal before welding to maintain continuity of line at joints.

F. Factory finish all items where possible. Defer final touch-up, cleaning and polishing after delivery and installation.

2.5 PANEL SIGN FABRICATION

A. Panel Signs: Comply with requirements shown for materials, thicknesses, finishes, colors, designs, shapes, sizes, and details of construction. Produce smooth, even, level sign panel surfaces, constructed to remain flat under installed conditions within a tolerance of plus or minus 1/16 in. measured diagonally.

B. Unframed Panel Signs: Fabricate signs with edges mechanically and smoothly finished to conform with the following requirements:

1. Edge Condition: Square cut.

2. Corner Condition: Square corners.

C. Graphic Content and Style: Provide sign copy that complies with the requirements (including ADA requirements) shown for size, style, spacing, content, position, material, finishes, and colors of letters, numbers, and other graphic devices.

2.6 DIMENSIONAL LETTERS AND NUMBERS FABRICATION

A. Fabricated Letters and Numbers: Fabricate letters and numbers to required sizes and styles, using metals and thicknesses shown. Form exposed faces and sides of characters to produce surfaces free from warp and distortion. Include internal bracing for stability and attachment of mounting accessories. Comply with requirements shown for finish, style, and size.

1. Stainless Steel Sheet: Not less than 0.090 in. thick. Fabricate by the heliarc welding process.

2.7 GRAPHICS

A. Graphic Content and Style: Provide sign copy to comply with the requirements shown for sizes, styles, spacing, content, positions, materials, finishes, and colors of letters, numbers, symbols, and other graphic devices.

PART 3 - EXECUTION

3.1 GENERAL

A. Manufacturer's Instructions: Prepare substrates and install the work of this Section, including components and accessories in accordance with the manufacturer's instructions, except where more stringent requirements are shown or specified, and where project conditions require extra precautions or provisions to ensure satisfactory

performance of the Work.

3.2 EXAMINATION

A. Verification of Conditions: Examine the areas to receive the Work and the conditions under which the Work would be performed. Remedy conditions detrimental to the proper and timely completion of the Work. Do not proceed until unsatisfactory conditions have been corrected.

3.3 PREPARATION

A. Substrate Acceptability: Inspect areas and accept surfaces designated to receive signage, as satisfactory for the reception of the Work specified in this Section, without conflict with "Warranty" requirements. Commencement of installation shall constitute acceptance of substrate conditions by the Installer.

B. Verify dimensions before proceeding and obtain measurements at the job site for work required to be accurately fitted. Locate all signage for City of New York's and Engineer's review prior to installation. Make adjustments to final position as directed.

C. Coordination: Coordinate work with the adjacent work of other sections. Provide items to be placed during the installation of other work at the proper time to avoid delays. Coordinate placement of such items, including inserts and anchors, accurately in relation to the final location of signage.

D. Clean and prepare substrate as required to insure proper adhesion of signage to the surface.

3.4 INSTALLATION

A. Signage shall be installed level and plumb, secured as shown on the Drawings and final shop drawings and in compliance with the manufacturer's instructions and with sign surfaces free from distortion or other defects in appearance. Cutting, trimming, fitting and matching of prefinished work will not be permitted.

B. Wall Mounted Panel Signage: Attach panel signage to wall surfaces using the methods shown below:

1. Silicone-Adhesive Mounting: Use liquid silicone adhesive recommended by the sign manufacturer to attach sign units to irregular, porous, or vinyl-covered surfaces. Use double-sided vinyl tape where recommended by the sign manufacturer to hold the sign in place until the adhesive has fully cured.

    a. Vinyl-Tape Mounting (Temporary): Use double-sided foam tape, of thickness shown, to mount signage to smooth, nonporous surfaces. Do not use this method for vinyl-covered or rough surfaces.

C. Dimensional Letters and Numbers: Mount letters and numbers using standard fastening methods recommended by the manufacturer for letter form, type of mounting, wall construction, and condition of exposure shown. Provide heavy paper template to establish letter spacing and to

locate holes for fasteners.

1. Projected Mounting: Mount letters at the projection distance from the wall surface shown.

3.5 CLEANING

A. Maintenance of Installation: Maintain the signage throughout the construction period in a clean and properly protected condition so that it will not be damaged at the time of acceptance by the City of New York. Cleaning and protective methods shall be carefully selected, applied and maintained so that finishes will not become uneven or otherwise impaired as a result of unequal exposure to light and weathering. Immediately remove any deleterious material from finished surfaces.

B. Cleaning: Upon completion of installation, wash exposed surfaces using methods as recommended by manufacturer to leave clean and free from blemishes. Protect the Work during construction period so that it will be without indication of deterioration, use or damage at time of acceptance

3.6 PROTECTION

A. Protection: Protect the Work during erection and construction to avoid non-uniformity of appearance or other defects in the Work. When requested for inspection of finishes, remove and replace temporary protection. Remove protection when no longer required. Protect the work during shipment, storage, erection and construction so as to avoid development of non-uniformity of appearance or other deleterious effects in the Work. Remove protection when requested by City of New York for inspection of finishes and replace. Remove protection when no longer required. Immediately remove mortar,

END OF SECTION

SECTION 10 16 00 – TOILET COMPARTMENTS

PART 1 - GENERAL

1.1 SUMMARY

A. General: Provide toilet compartments in accordance with requirements of the Contract Documents.

B. Related Work Specified Elsewhere

1. Framing for toilet compartments is specified in Section 05 50 00 “Metal Fabrications”.

2. Wood blocking is specified in Section 06 10 00 “Rough Carpentry”.

3. Toilet accessories are specified in Section 10 28 13 “Toilet Accessories”.

1.2 REFERENCES

A. General: Comply with the applicable provisions of the referenced standards except as modified by governing codes and the Contract Documents. Where a recommendation or suggestion occurs in the referenced standards, such recommendation or suggestion shall be considered mandatory. In the event of conflict between referenced standards, this specification or within themselves, the more stringent standard or requirement shall govern.

1. American Welding Society (AWI)

a. AWS D1.1 "Structural Welding Code - Steel".

b. AWS D1.3 "Structural Welding Code - Sheet Steel".

2. National Association of Architectural Metal Manufacturers (NAAMM): NAAMM "Metal Finishes Manual".

3. Industrial Fasteners Institute (IFI): "Fastener Standards Book."

4. ICC ANSI A117.1 - 2009

1.4 SUBMITTALS

A. Product Data: Submit manufacturer’s literature, specifications and installation instructions describing the general properties of each material and accessory to be used in the Workincluding catalog cuts of anchors, hardware, fastenings, and accessories.

B. Shop Drawings: Submit shop drawings for the fabrication and installation of the Work. Prepare details at not less than 3 in. = 1 ft. minimum scale showing layout, elevations, and dimensions of all panels, pilasters, and doors. Show cutouts and anchorage for other work as required. Show locations of reinforcement and cutouts for compartment-mounted toilet accessories coordinated with approved toilet accessory manufacturer and model number. Revise shop drawings to adjust to field measurements.

C. Setting Drawings: Provide setting drawings and templates for the location of metal anchorage items that are to be embedded in or anchored to concrete, masonry or anchored to gypsum wallboard including location of partition reinforcing.

D. Samples: Label samples to indicate product, characteristics, and location in the Work. Samples will be reviewed for color and appearance only. Furnish sufficient samples to establish the full range of colors and textures for materials exposed in the finished work. Compliance with other requirements is the responsibility of the Contractor. Provide the following:

1. Metal Finishes: Sample of each type of metal and finish required for units, prepared on 6 in. square of same gauge, alloy, thickness and material indicated to be used in the final Work.

2. Hardware: One of each type.

E. Quality Control Submittals:

1. Test Reports: Submit independent laboratory test results showing compliance with the following:

a. Fire test reports based on specified assembled panel partition performed by a qualified independent testing agency showing that the materials furnished comply with specified requirements

F. Closeout Submittals: Submit the following:

1. Warranties: Special warranties as specified.

2. Maintenance Manuals: Two (2) copies of bound maintenance manuals, describing the materials, and procedures for cleaning and maintaining the toilet partitions Include manufacturer's data describing the materials and finishes used in the work. Include precautions for cleaning toilet partition materials and methods that could be detrimental to finishes and performance. Include cleaning and stain-removal products and procedures.

1.5 QUALITY ASSURANCE

A. Qualified Installer: The entity performing the work of this section must, within the last five (5) consecutive years prior to the bid opening have successfully completed in a timely fashion at least three (3) projects similar in scope, size and type to the required work.

B. Single Source Responsibility: Obtain toilet compartment from one source of a single manufacturer for the entire project. Obtain accessory products used in conjunction with toilet compartment from the toilet compartment manufacturer or from sources acceptable to the toilet compartment manufacturer. The manufacturer providing material or equipment specified in this section must, for the past five (5) years, have been regularly engaged in the manufacture of material or equipment similar in type to that required for this Project. Such material or equipment provided by the manufacturer must have been in satisfactory service for not less than five (5) years.

C. Regulatory Requirements: Comply with applicable requirements of the laws, codes, ordinances and regulations of Federal, State and Municipal authorities. Obtain necessary approvals from the NYC Building Department.

D. Size Variations: Obtain acceptance of manufacturer's standard size units, which may vary slightly from sizes indicated.

1.6 DELIVERY, STORAGE AND HANDLING

A. Deliver partition units fully identified for installation complete with fastenings and accessories and protected from damage from any source.

B. Protect units from damage during transit, storage and installation. Tool marks, rust, blemishes and any other damage on exposed surfaces will not be acceptable. Store material indoors in a dry location, off the ground.

C. Protect units during construction period so that they will be without any indication of deterioration, use or damage at time of substantial completion.

1.7 WARRANTIES

A. General: Warranties specified in this Article shall not deprive the City of New York of other rights the City of New York may have under other provisions of the Contract Documents and are in addition to and run concurrent with other warranties made by the Contractor under requirements of the Contract Documents.

1. Special Warranty: Provide a written warranty for a period of (10) ten years, warranting that the toilet partition will be free of defects in material or workmanship and free of operating defects during the warranty period. Warranty shall be signed by the Contractor and the firm awarded the work. Failures, include but are not limited to:

a. Failure of the system to meet performance requirements including but not limited to excessive deflection, racking and warpage.

b. Faulty operations of doors and hardware.

c. Deterioration of finishes and other materials beyond normal weathering.

d. Upon notification of such defect, within the warranty period, make the necessary repairs at the convenience of the City of New York.

PART 2 - PRODUCTS

2.1 MANUFACTURERS

A. Provide toilet compartments and urinal screens complete with all required accessories as produced by one manufacturer. Products specified herein by proprietary designation are as manufactured by Hadrian and establish the quality standards required. Similar and equivalent products by other

manufacturers will be considered provided they meet the above established standards, comply with the Contract Documents and is acceptable to and approved by the Engineer. Provide the following system or approved equal by Engineer:

1. Toilet Compartments (**TC-01**): "Elite Plus Series" (Hadrian) with embossed stainless steel finish as basis of design but not intended to imply a preference for a specific product or the following:
   a. Knickerbocker Partition Corporation.
   b. Metpar Corp.
   c. Or approved equal.
2. Panel and Door Height: 72 ins.
3. Installation: Floor mounted, headrail braced, 9 ins. A.F.F.

2.1 MATERIALS

A. General: Provide materials which have been selected for surface flatness and smoothness. Exposed surfaces which exhibit pitting, marks, distortions, stains, discolorations, or other imperfections on finished units are not acceptable.

B. Stainless Steel: ASTM A240; Provide the most suitable austenitic alloy, form and finish required to produce the Work. Provide Type 304 and low carbon Type 304L for components to be welded, unless otherwise noted. , Provide minimum gauges as follows:
   1. Doors: 22 gauge.
   2. Panels: 20 gauge.
   3. Pilasters: 20 gauge.
   4. Concealed Reinforcement: 14 gauge for tapping, 12 gauge for anchoring devices.
   5. Urinal Screens: 20 gauge.

C. Brackets: Stainless steel of manufacturer's standard, plain bent plate design.

D. Pilaster Shoes: Stainless steel sheet, minimum 20 gauge, formed to manufacturer's standard design, not less than 3 in. high.

E. Core Filler: Manufacturer's standard rot-proof and vermin-proof, resin impregnated sound deadened, corrugated or honeycomb type core material.

F. Adhesive: Manufacturer recommended adhesive.

2.2 FABRICATION

A. Metal Doors: 1 in. thick; fabricate as specified for panels. Strengthen doors against torsional stresses by tack or spot welding faceplates together under edge moldings or plug welding faceplate edges through edge molding; space welds not over 18 in. apart. Make doors 24 in. wide, unless otherwise shown. Unless otherwise shown, furnish 24 in. wide

inswinging doors for ordinary toilet stalls and 32 in. wide (clear opening) outswinging doors at stalls equipped for use by handicapped.

B. Metal Pilasters: 1-1/4 in. thick; same construction as specified for doors. Provide each connecting end with an anchoring device consisting of a reinforced galvanized steel cross-bar internally welded to faceplates. Device to provide adjustment for leveling, plumbing and tightening of installation.

C. Metal Urinal Screens

1. Same thickness and type construction specified for panels with an additional 4 in. wide steel bar or plate internal reinforcement extending along both vertical edges.

D. Entrance Screens: Same thickness, height and type of construction specified for panels and pilasters, unless otherwise shown.

E. Drilling and Tapping

1. General: Provide factory drilling to receive fittings, hardware and other accessories attached to toilet compartments; tap holes for machine screw fastenings.

2. Toilet Accessories: Obtain templates to drill holes to receive toilet accessories: templates furnished to partition manufacturer under Section 10 28 13 "Toilet Accessories". All cutting, drilling, tapping and internal reinforcement required for partition mounted toilet accessories shall be performed in the shop. No field cutting of toilet compartments will be permitted, unless approved by the manufacturer and the Engineer.

2.3 TOILET PARTITION HARDWARE

A. Hardware: Provide manufacturer's standard heavy duty operating hardware and accessories fabricated from Type 304 stainless steel. All stainless steel hardware shall receive a #4 satin finish and shall match each other.

1. Hinges: Manufacturer's standard cutout inset type, gravity type or spring tension cam type hinges, fully adjustable to bring door to rest in any position, with all moving parts self-lubricating.

2. Latch and Keeper: Manufacturer's standard concealed slide latch mounting unit, with rubber bumper on keeper designed for emergency access, one unit required on each door at mid-point. Provide latch and keeper units that comply with accessibility requirements of the NYC Building Department at compartments indicated to be accessible to people with disabilities.

3. Door Pulls: Manufacturer's standard unit for outswinging doors.

4. Door Bumpers: Manufacturer's standard rubber tipped bumper for outswinging doors.

5. Combination Coat Hook and Bumper: Manufacturer's standard hook and pin with rubber bumper, one unit required on each door,

mounted 3 in. from top at center of door, except as otherwise shown..

2.4 FASTENERS, ANCHORAGE, REINFORCEMENT AND SUPPORTS

A. Fastening Devices: Stainless steel or brass machine screws, sex bolts and stud bolts with exposed finish to match hardware. Use manufacturer's standard fastening devices except use only 1-way or spanner type heads and nuts for exposed screws and bolts.

B. Drilling and Tapping

1. General: Provide factory drilling to receive fittings, hardware and other accessories attached to toilet compartments; tap holes for machine screw fastenings.

2. Toilet Accessories: Obtain templates to drill holes to receive toilet accessories: templates furnished to partition manufacturer under Section 10 28 13 "Toilet Accessories". All cutting, drilling, tapping and internal reinforcement required for partition mounted toilet accessories shall be performed in the shop. No field cutting of toilet compartments will be permitted, unless approved by the manufacturer and the City of New York.

2.5 FINISHES

A. General: As shown for the respective units and matching the reviewed samples. Remove scratches, abrasions, dents, die markings and other defects prior to finishing operations. Perform this work in addition to finish treatment specified. Comply with NAAMM "Metal Finishes Manual" for finish designations and application recommendations unless otherwise specified.

B. Aluminum: Natural Anodized, AA-M12C22A41, Class I Architectural: clear film thicker than 0.7 mils complying with AAMA 611.

C. Stainless Steel: No. 4 satin finish. Apply finished exposed stainless steel with texture aligned in same direction for all components.

D. Other Exposed Metal for Hardware: US26 polished chromium finish.

PART 3 - EXECUTION

3.1 GENERAL

A. Manufacturer's Instructions: Prepare substrates and install the work of this Section, including components and accessories in accordance with the manufacturer's instructions, except where more stringent requirements are shown or specified, and where project conditions require extra precautions or provisions to ensure satisfactory performance of the Work.

3.2 EXAMINATION

A. Verification of Conditions: Examine the areas to receive the Work and the conditions under which the Work would be performed. Remedy conditions detrimental to the proper and timely completion of the Work. Do not proceed until unsatisfactory conditions have been corrected.

B. Coordination: Furnish inserts and anchorages which must be built into other work for installation of toilet compartments and related work; coordinate delivery with other work to avoid delay.

3.3 PREPARATION

A. Substrate Acceptability: Inspect areas and accept surfaces designated to receive toilet compartments, as satisfactory for the reception of the Work specified in this Section. Commencement of installation shall constitute acceptance of substrate conditions by the Installer

3.4 INSTALLATION

A. Verify all measurements and dimensions at the Project site and coordinate the Work with the work of other trades. Allow for adjustments within specified clearances where ever taking field measurements before fabrication might delay work. Erect work rigidly; straight, plumb and level. Conceal field drilling, cutting and fitting into the finished work. Adjust hardware for proper operation and leave in good working condition.

1. Maximum Clearances:

a. Pilasters and Panels: 1/2 in.

b. Panels and Walls: 1 in.

B. Comply with manufacturer's recommended procedures and installation sequence. Install compartments rigid, straight, plumb, and level. Locate wall brackets so that holes for wall anchorages occur in masonry or tile joints. Secure panels to pilasters with not less than two stirrup brackets located to align with stirrup brackets at wall. Secure panels in position with manufacturer's recommended anchoring devices.

C. Overhead-Braced Units: Secure pilasters to floor and level, plumb, and tighten. Secure continuous head rail to each pilaster with not less than two fasteners. Hang doors to align tops of doors with tops of panels and adjust so tops of doors are parallel with overhead brace when doors are in closed position.

D. Pilasters

1. General: Fasten each pilaster directly to structure or an anchor plate with 2 stud bolts integrally welded thereto per manufacturer's recommendations. Rigidly secure pilasters to stud bolts by means of the anchoring device with face washers and leveling nuts so as to transmit strain of lateral thrust and pull to structure.

2. Pilasters Adjacent to Walls: Install as specified hereinbefore; provide with one stud bolt. Fasten each pilaster to walls at same

number of points specified for panels. Provide single-wing type brackets; align with panel brackets; secure each bracket to walls with 2 bolts of appropriate type and secure pilasters to each bracket with one sex bolt. Clearance between pilasters and walls shall be between 1/2 in. and 1 in. maximum.

3. Pilaster Shoes: Conceal pilaster anchors with a pilaster shoe secured by concealed clips or machine screws.

E. Panels: Fasten to walls and pilasters at not less than 2 points. Provide U-type brackets for fastening to pilasters and double-wing type brackets for fastening to walls. Secure each bracket to pilasters with 2 machine screws, to walls with 2 bolts of appropriate type; secure panels to each bracket with one sex bolt. Clearance between panels and pilasters shall be 1/2 in. maximum; between panels and walls shall be between 1/2 in. and 1 in. maximum.

F. Doors: Hang doors on hinges, located per manufacturer's standard, with working parts concealed in door. Set compartment door hinges to bring door to rest at approximately 30 deg. position from closed position when unlatched. Set hinges on outswinging doors to return to fully closed position. Coordinate location of bumpers on outswinging doors with counters, partition or other obstructions.

G. Urinal Screens

1. Wall Hung; Bracket Supported Type: Fasten to walls at not less than two points with extra heavy double-wing type brackets. Provide clearance and secure to walls as specified for panels.

3.5 ADJUSTMENT

A. Adjust and lubricate hardware for proper operation. Set hinges on in-swinging doors to hold doors open approximately 30 degrees from closed position when unlatched. Set hinges on out-swinging doors (and doors in entrance screens) to return doors to fully closed position.

3.6 CLEANING

A. Clean surfaces and leave free from smears. Repair minor scratches and other finish imperfections. Replace damaged work. Provide protection as necessary to prevent damage during remainder of construction period.

END OF SECTION

SECTION 10 28 13 – TOILET ACCESSORIES

PART 1 - GENERAL

1.1 SUMMARY

A. General: Provide toilet accessories in accordance with requirements of the Contract Documents.

B. Related Work Specified Elsewhere

1. Wood blocking is specified in Section 06 10 00 “Rough Carpentry”.
2. Mirrors not designated as toilet accessories are specified in Section 08 80 00 “Glazing”.
3. All necessary roughing-in of mechanical and electrical connections required for the equipment complete with final connections, including electrical, communications and other utility line connections required to properly operate the equipment specified herein.

1.2 REFERENCES

A. General: Comply with the applicable provisions of the referenced standards except as modified by governing codes and the Contract Documents. Where a recommendation or suggestion occurs in the referenced standards, such recommendation or suggestion shall be considered mandatory. In the event of conflict between referenced standards, this specification or within themselves, the more stringent standard or requirement shall govern.

1. National Association of Architectural Metal Manufacturers (NAAMM): NAAMM "Metal Finishes Manual".
2. Industrial Fasteners Institute (IFI): "Fastener Standards Book."
3. National Electric Code (NEC): NFPA 70: National Electrical Code
4. National Electrical Manufacturers Association (NEMA).
    a. NEMA ICS 1: Industrial Control and Systems General Requirements
    b. NEMA MG 1(Revision No. 2): Motors and Generators
5. ICC ANSI A117.1 - 2009

1.3 SUBMITTALS

A. Product Data: Submit manufacturer’s literature, specifications and installation instructions describing the general properties of each material and accessory to be used in the Work.

B. Setting Drawings: Submit setting drawings for toilet accessory cutouts required in other work; include templates, substrate preparation instructions, and directions for preparing cutouts and installing anchoring devices.

C. Samples: Label samples to indicate product, characteristics, and location in the Work. Samples will be reviewed for color and appearance only. Compliance with other requirements is the responsibility of the Contractor.

1. Submit full size samples of each toilet accessory specified, as requested. Accepted samples may be used in the final installation.

D. Schedule: Submit a toilet accessory schedule indicating types, quantities, sizes and installation locations by room for each toilet accessory item specified. Use designations indicated in the Schedule of Accessories specified herein and room designations indicated on Drawings in product schedule.

E. Closeout Submittals: Submit the following:

1. Warranties: Special warranties as specified.

2. Maintenance Data: Two (2) copies of the manufacturer's operating and maintenance manuals, including parts lists for the electrical toilet accessories.

1.4 QUALITY ASSURANCE

A. Qualified Installer: The entity performing the work of this section must, within the last five (5) consecutive years prior to the bid opening have successfully completed in a timely fashion at least three (3) projects similar in scope, size and type to the required work.

B. Single Source Responsibility: Obtain toilet accessories from one source of a single manufacturer for the entire project. Obtain accessory products used in conjunction with toilet accessory from the toilet accessory manufacturer or from sources acceptable to the manufacturer. The manufacturer shall furnish evidence that the specified materials have been manufactured by the same source and successfully utilized on a yearly basis for a minimum of 5 years on projects of a similar scope to that shown and specified for this Project.

C. Regulatory Requirements: Comply with applicable requirements of the laws, codes, ordinances and regulations of Federal, State and Municipal authorities. Obtain necessary approvals from the NYC Building Department.

D. Electrical Components, Devices, and Accessories: Listed and labeled as defined in NFPA 70, Article 100, by a testing agency acceptable to the NYC Building Department, and marked for intended use.

1.5 DELIVERY, STORAGE AND HANDLING

A. Packing, Shipping, Handling, and Unloading: Pack, ship and handle components in accordance with manufacturer’s instructions. Protect toilet accessories during transit, delivery, storage, and handling to prevent damage, soilage, and deterioration. Cover and keep covered with non-staining protective wrapping. Do not deliver accessories until operations that could damage, soil, or deteriorate panels have been completed in installation areas.

B. Storage of Materials: Store materials in unopened containers. Store off the ground and under cover, protected from damage by the elements.

1.6 WARRANTIES

A. Warranties specified in this Article shall not deprive the City of New York of other rights the City of New York may have under other provisions of the Contract Documents and are in addition to and run concurrent with other warranties made by the Contractor under requirements of the Contract Documents.

1. Special Warranty: Provide a written warranty, for a period of five (5) years, for toilet accessory mirrors against visible silver spoilage defects. Upon notification of such defects, make necessary replacements at the convenience of the City of New York.

2. Special Warranty, Electric Hand Dryers: Provide a written warranty for a period of ten (10) years for the electric hand dryers against defects. Upon notification of such defects, make necessary replacements at the convenience of the City of New York.

PART 2 - PRODUCTS

2.1 MATERIALS

A. Stainless Steel: ASTM A666, Type 304 0.03 in. minimum nominal thickness with No. 4 finish, for all toilet accessories unless otherwise specified.

B. Sheet Steel: ASTM A1008, Designation CS (cold rolled, commercial quality steel),

0.04 in. minimum nominal thickness unless otherwise shown or specified, surface preparation and metal pretreatment as required for applied finish.

C. Galvanized Sheet Steel: ASTM A653, with Grade G60 hot dipped coating.

D. Chrome Plating: ASTM B456, Service Condition No. SC2; US26D finish. On brass, nickel coating applied either directly to the base metal or over a coating of copper. On steel, nickel coating applied over a coating of copper.

E. Mirrors: ASTM C1036, Type 1, Class 1, Quality q^1, 1/4 in. thick unless otherwise specified. Mirrors shall have a uniform coating of silver, protected by a film of electrolytically deposited copper and a protective organic coating.

F. Galvanized Steel Mounting Devices: ASTM A153, hot dip galvanized after fabrication.

G. Fastening Devices: Stainless steel or cadmium plated steel, concealed in the finished work wherever possible. Exposed screws shall be theft-proof, flat head, countersunk, finished to match the accessory where exposed. Furnish two (2) special tools per floor.

H. All Other Materials: Manufacturer's standard for the items required or type best suited for the intended use.

2.2 FABRICATION

A. Recessed Units: Except where otherwise shown, fabricate units of all welded construction, without mitered corners. Hang doors or access panels with full length stainless steel piano hinge. Provide fasteners and anchorage that are fully concealed when unit is in the closed position.

B. Surface Mounted Units: Except where otherwise shown, fabricate units with tight seams and joints and all edges rolled. Hang doors or access panels with full length stainless steel piano hinge. Provide fasteners and anchorage that are fully concealed when unit is in the closed position.

C. Manufacturer's nameplates on exposed faces of units will not be permitted. Provide identification of each accessory item indicating manufacturer's name and product model number either on the back of the accessory or on a surface not exposed to view utilizing printed, waterproof label or stamped nameplate indicating manufacturer's name and product model number.

D. Keys: Unless otherwise indicated, provide universal keys for access to toilet accessory units requiring internal access for servicing, resupply, etc. Provide minimum of six (6) keys to City of New York's representative and obtain receipt.

2.3 MANUFACTURER

A. Specified product designations are from the current catalog of Bobrick Washroom Equipment, Inc., unless otherwise specified, and establish the minimum standards of design, dimension and quality but not intended to imply a preference for a specific product. Accessories manufactured by the following will be considered:

1. A & J Washroom Accessories.
2. American Specialties.
3. Bradley Corp.
4. Or approved equal.

2.4 SCHEDULE OF ACCESSORIES

A. General: Provide products of the same manufacturer for each type of accessory unit and for units exposed in the same areas, unless otherwise acceptable to the City of New York.

1. Provide Accessories as indicated on drawings, “Toilet Accessories Schedule”.

PART 3 - EXECUTION

3.1 GENERAL

A. Manufacturer's Instructions: Prepare substrates and install the work of this Section, including components and accessories in accordance with the manufacturer's instructions, except where more stringent requirements are shown or specified, and where project conditions require extra precautions or provisions to ensure satisfactory performance of the Work.

3.2 EXAMINATION

A. Verification of Conditions: Examine the areas to receive the Work and the conditions under which the Work would be performed. Remedy conditions detrimental to the proper and timely completion of the Work. Do not proceed until unsatisfactory conditions have been corrected.

3.3 PREPARATION

A. Substrate Acceptability: Inspect areas and accept surfaces designated to receive toilet accessories, as satisfactory for the reception of the Work specified in this Section. Commencement of installation shall constitute acceptance of substrate conditions by the Installer.

B. Verify all measurements and dimensions at the Project site and coordinate the Work with the work of other trades. Where toilet accessories are scheduled for installation on metal toilet partitions, verify that concealed reinforcing is accurately and securely located.

3.4 COORDINATION

A. Coordinate toilet accessory locations, installation, and sequencing with other work to avoid interference with and ensure proper installation, operation, adjustment, cleaning, and servicing of toilet accessory items.

B. Deliver inserts and anchoring devices set into concrete or masonry as required to prevent delaying the Work.

3.5 INSTALLATION

A. Templates and Instructions: Furnish templates of accessories for drilling, tapping and cutouts. Furnish directions for preparing cutouts, installation of anchorage devices, substrate preparations and any other installation information required for work by other trades.

B. Install accessories where shown, in accordance with manufacturer's written instructions. Utilize fasteners suitable for the substrate; rigidly secured and in accurate alignment with other fixtures. Provide concealed reinforcement and anchor plates as required to support units. Install accessories plumb and level.

C. Do not through bolt toilet accessories mounted on toilet partitions. Drill and tap partition reinforcement for accessory bolts.

3.6 ADJUSTMENT AND CLEANING

A. After review of the installation by the City of New York, remove protection, labels, smears and stains. Clean and polish each accessory in accordance with manufacturer's written recommendations and instructions.

B. Adjust accessories for proper operation and verify that mechanisms function smoothly. Replace damaged or defective items.

END OF SECTION

SECTION 10 44 00 – FIRE EXTINGUISHERS AND ACCESSORIES

PART 1 - GENERAL

1.1 SUMMARY

A. General: Provide fire extinguishers and accessories in accordance with requirements of the Contract Documents.

B. Related Work Specified Elsewhere

1. Sealants and joint fillers other than specified herein installed at interface of contiguous assemblies and other building components are specified under Section 07 92 00 “Joint Sealants”.

1.2 REFERENCES

A. General: Comply with the applicable provisions of the referenced standards except as modified by governing codes and the Contract Documents. Where a recommendation or suggestion occurs in the referenced standards, such recommendation or suggestion shall be considered mandatory. In the event of conflict between referenced standards, this specification or within themselves, the more stringent standard or requirement shall govern.

1. National Fire Protection Association (NFPA): NFPA 10 “Portable Fire Extinguishers”.

2. National Association of Architectural Metal Manufacturers (NAAMM) NAAMM "Metal Finishes Manual".

3. New York City Building Code, latest edition.

1.3 SUBMITTALS

A. Product Data: Submit for Engineer’s action. Provide manufacturer’s literature and specifications describing the general properties of each fire extinguishers and accessories to be used in the Work including a material list with technical data documenting the location and primary function, quality, and performance of each material component or system to be used in the Work or other primary characteristics as required by the Contract Documents..

B. Shop Drawings: Submit for action Provide shop drawings detailing fabrication and installation of each fire extinguishers and accessories, including dimensioned plans, elevations and details of sections, connections, anchorage and accessory items, drawn at a minimum scale of 3"=1'-0". Provide templates for anchors and bolts specified for installation under other Sections.

1. Include roughing-in dimensions, details showing mounting methods, relationships to surrounding construction and door hardware

2. Setting Drawings: Provide setting drawings and templates for the location of fire extinguishers and accessories items that are to be embedded in or anchored to concrete or masonry.

C. Schedules: Submit for Engineer's action. Submit a fire extinguishers and accessories schedule indicating types, quantities, sizes and installation locations by room for each fire extinguishers and accessories item specified. Use designations indicated in the Schedule of Accessories specified herein and room designations indicated on Drawings in product schedule.

1. Provide a schedule noting quantities of each type fire extinguisher, locations and relationship to requirements to NFPA 10.

2. Provide a schedule noting quantities of each type fire extinguisher and accessory noting locations.

D. Samples: Submit for Engineer's action. Label samples to indicate product, characteristics, and location in the Work. Samples will be reviewed for color and appearance only. Furnish sufficient samples to establish the full range of colors and textures for materials exposed in the finished work. Compliance with other requirements is the responsibility of the Contractor. Submit the following:

1. Each finish of each metal on the gauge and alloy to be used in the final work, 6 in. square

2. Other specified items as requested.

E. Quality Control Submittals: Submit for information.

1. Certifications

a. Manufacturer's and fabricator's certification indicating that pigmented organic coating complies with the Contract Documents and AAMA 2603.

F. Closeout Submittals: Submit for documentation.

1. Warranties: Special warranties as specified.

2. Maintenance Manual: Submit two (2) copies of a bound maintenance manual, describing the materials, and procedures for cleaning and maintaining each metal type. Include manufacturer's data describing the materials and finishes used in the work.

1.4 QUALITY ASSURANCE

A. Qualified Installer: The entity performing the work of this section must, within the last five (5) consecutive years prior to the bid opening have successfully completed in a timely fashion at least three (3) projects similar in scope, size and type to the required work.

B. Single Source Responsibility: Obtain fire extinguishers and accessories from one source of a single manufacturer. Obtain accessory products used in conjunction with fire extinguishers and accessories from the fire extinguishers and accessories manufacturer or from sources acceptable to the manufacturer. The manufacturer shall furnish

evidence that the specified materials have been manufactured by the same source and successfully utilized on a yearly basis for a minimum of 5 years on projects of a similar scope to that shown and specified for this Project.

C. Regulatory Requirements: Comply with applicable requirements of the laws, codes, ordinances and regulations of Federal, State and Municipal authorities. Obtain necessary approvals from the NYC Building Department.

1. NFPA Compliance: Fabricate and label fire extinguishers to comply with NFPA 10, "Portable Fire Extinguishers."

2. All fire extinguishers shall be FM Approved.

D. Pre-Installation Meeting: Prior to the start of the Work, meet at the Project site to review methods and sequence of Work, special details and conditions, standard of workmanship, and other pertinent topics related to the Work.

1.5 DELIVERY, STORAGE AND HANDLING

A. Packing, Shipping, Handling, and Unloading: Deliver fire extinguishers and accessories work fully sealed and identified.

B. Storage of Materials: Store indoors, above the floor, protected from construction activities and other sources of damage. Protect from damage from any source. Provide removable protection as required.

PART 2 - PRODUCTS

2.1 MANUFACTURERS

A. Manufacturers: Products specified herein by proprietary designation are as manufactured by Larsen's Manufacturing Company and establish the quality standards required. Equivalent products of the following manufacturers will be considered provided they meet those established standards.

1. J.L. Industries.

2. Potter-Roemer Company

3. Walter Kidde, Division of Kidde, Inc.

4. Or approved equal.

2.2 MATERIALS

A. Cold-Rolled Sheet Steel: ASTM A1008, Designation CS (cold rolled, commercial quality steel), 0.04 in. minimum nominal thickness unless otherwise shown or specified, surface preparation and metal pretreatment as required for applied finish.

B. Galvanized Steel Mounting Devices: ASTM A153, hot dip galvanized after fabrication.

C. Stainless Steel

1. ASTM A240 ; Provide the most suitable austenitic alloy, form and finish required to produce the Work. Provide Type 304 and low

carbon Type 304L for components to be welded, unless otherwise noted.

a. Plate and Sheet: ASTM A480 , Stretcher level sheets.

b. Bar Stock and Shapes: ASTM A276.

D. All Other Materials: Manufacturer's standard for the items required or type best suited for the intended use.

2.3 FIRE EXTINGUISHER ACCESSORIES

A. Identify bracket-mounted extinguishers with red letter decals spelling "FIRE EXTINGUISHER" applied to wall surface. Letter size, style, and location as selected.

2.4 FINISHES, GENERAL

A. Comply with NAAMM "Metal Finishes Manual" for recommendations relative to application and designations of finishes.

B. Surface Preparation: Solvent clean surfaces in compliance with SSPS-SP 1 to remove dirt, oil, grease, and other contaminants that could impair paint bond. Remove mill scale and rust, if present, from uncoated steel in compliance with SSPC-SP 5 (White Metal Blast Cleaning) or SSPC-SP 8 (Pickling).

C. Baked Enamel Finish: Immediately after cleaning and pretreatment, apply manufacturer's standard 2 coat baked enamel finish consisting of prime coat and thermosetting topcoat. Custom color as approved by Engineer. Comply with paint manufacturer's instructions for application and baking to achieve a min. dry film thickness of 2.0 mils.

D. Protect mechanical finishes on exposed surfaces from damage by application of strippable, temporary protective covering prior to shipment.

2.5 FIRE EXTINGUISHERS

A. General: Provide fire extinguishers for each extinguisher bracket and other locations indicated, in colors and finishes selected by the Engineer from manufacturer's standard, which comply with requirements of the NYC Building Department.

B. 2A Fire Extinguishers: Provide UL-rated 2A, 2-1/2 gallon nominal capacity, water mist type in manufacturer's standard enameled steel container. Provide "WM Series" (Larsen's Manuf. Co.) as basis of design but not intended to imply a preference for a specific product.

1. Equivalent products of the following manufacturers will be considered provided they meet those established standards.

a. J.L. Industries.

b. Potter-Roemer Company

c. Walter Kidde, Division of Kidde, Inc.

d. Or approved equal.

C. B:C Fire Extinguishers: Provide UL-rated B:C, 10 lbs. nominal capacity, carbon dioxide type in manufacturer's standard enameled aluminum container. Provide "CD Series" (Larsen's Manuf. Co.) as basis of design but not intended to imply a preference for a specific product.

1. Equivalent products of the following manufacturers will be considered provided they meet those established standards.

a. J.L. Industries.

b. Potter-Roemer Company

c. Walter Kidde, Division of Kidde, Inc.

d. Or approved equal.

D. 2A: 20B:C Multipurpose Dry-Chemical Fire Extinguisher: Provide Monoammonium phosphate-based dry chemical or equivalent Enameled-steel container. Include pictorial marking system complying with NFPA 10, Appendix B instructional labels. Include manufacturer standard valves, handles, levels and pressure gauges.

E. D Combustible Metal Fire Extinguisher: Sodium Chloride based chemical or equivalent, 13.6 kg nominal capacity Enameled-steel container. Include pictorial marking system complying with NFPA 10, Appendix B instructional labels. Include manufacturer standard valves, handles, levels and pressure gauges.

2.6 FIRE EXTINGUISHER MOUNTING BRACKETS

A. Provide brackets designed to prevent accidental dislodgement of extinguisher, of sizes required for type and capacity of extinguisher indicated in plated finish.

B. Mounting Brackets For A:B:C: and D Extinguishers Not Located In Cabinets: Provide red brackets for extinguishers not located in cabinets, where shown or required. Provide "862" (Larsen's Manuf. Co.) as basis of design but not intended to imply a preference for a specific product.

1. Equivalent products of the following manufacturers will be considered provided they meet those established standards.

a. J.L. Industries.

b. Potter-Roemer Company

c. Walter Kidde, Division of Kidde, Inc.

d. Or approved equal.

2. Identify bracket mounted extinguishers with red letter decals complying with the NYC Building Department and spelling "FIRE EXTINGUISHER" applied to wall surface. Letter size, style, and location as selected by Engineer.

PART 3 - EXECUTION

3.1 GENERAL

A. Manufacturer's Instructions: Prepare substrates and install the work of this Section, including, components and accessories in accordance with the manufacturer's instructions, except where more stringent requirements are shown or specified, and where project conditions require extra precautions or provisions to ensure satisfactory performance of the Work

3.2 EXAMINATION

A. Verification of Conditions: Examine the areas to receive the Work and the conditions under which the Work would be performed. Contractor shall remedy conditions detrimental to the proper and timely completion of the Work. Do not proceed until unsatisfactory conditions have been corrected.

B. Examine walls and partitions for suitable framing depth and blocking where brackets will be installed.

C. Inspect fire extinguisher hose for tears and that pull pin is still intact.

D. Inspect fire extinguisher pressure gauge to ensure that the pressure is within the manufacturer’s specified range.

E. Proceed with installation only after unsatisfactory conditions have been corrected.

3.3 PREPARATION

A. Substrate Acceptability: Inspect areas and accept surfaces designated to receive fire extinguishers and accessories, as satisfactory for the reception of the work specified in this Section. Commencement of installation shall constitute acceptance of substrate conditions by the Installer.

B. Coordinate setting drawings, diagrams, templates, instructions and directions for installation of anchorages which are to be embedded in concrete or masonry construction at the proper time to avoid delays in the work. Place such items, including inserts and anchors, accurately in relation to the final location of louver components.

3.4 INSTALLATION

A. Install items included in this section in locations and at mounting heights indicated, or if not indicated, at heights to comply with the NYC Building Department.

1. Securely fasten mounting brackets for fire extinguisher to structure, square and plumb, to comply with manufacturer’s instructions.

B. Install A:B:C and D fire extinguishers in accordance with drawing ± 2 feet.

1. If positioned on wall support beam, use the wall system vendor’s approved fastener.

2. If positioned on a column or concrete wall, use appropriate hardware that can support the weight of the fire extinguisher.

3. For all other locations, a unistrut rack must be built and anchored to the floor to support the fire extinguisher(s).

4. The top of class ABC fire extinguishers must be 36 inches to 42 inches above the finished floor.

5. The bottom of a class D fire extinguisher must be a minimum of 4 inches above the finished floor.

6. All fire extinguisher signs must be a minimum of 84 inches above the finished floor.

C. Notify appropriate authority when items are installed so they can inspect and tag fire extinguishers.

3.5 PROTECTION

A. Restore finishes damaged during installation and construction period so that no evidence remains of correction work. Return items which cannot be refinished in the field to the shop; make required alterations and refinish entire unit, or provide new units as required.

B. Protect finishes of work from damage during construction period by use of temporary protective coverings approved by manufacturer. Remove protective covering at time issuance of Substantial Completion.

END OF SECTION

SECTION 10 51 13 – METAL LOCKERS AND ACCESSORIES

PART 1 - GENERAL

1.1 SUMMARY

A. Provide lockers and benches in accordance with requirements of the Contract Documents.

1.2 REFERENCES

A. General: Comply with the applicable provisions of the referenced standards except as modified by governing codes and the Contract Documents. Where a recommendation or suggestion occurs in the referenced standards, such recommendation or suggestion shall be considered mandatory. In the event of conflict between referenced standards, this specification or within themselves, the more stringent standard or requirement shall govern

1. National Association of Architectural Metal Manufacturers (NAAMM): NAAMM "Metal Finishes Manual".
2. American Welding Society (AWS)
    a. AWS D1.1 "Structural Welding Code - Steel".
    b. AWS D1.2 "Structural Welding Code - Aluminum".
    c. AWS D1.3 "Structural Welding Code - Sheet Steel".
3. Industrial Fasteners Institute (IFI): "Fastener Standards Book."

1.3 PERFORMANCE CRITERIA

A. Uniformity: Provide metal lockers, with interchangeable like parts. Include necessary hardware, mounting accessories, trim, fittings, and fastenings.

B. Performance Requirements: When doors are locked and the locker inverted, doors shall withstand a drop of not less than 6 in. without the slide latches disengaging.

1.4 SUBMITTALS

A. Product Data: Submit manufacturer’s literature, specifications and installation instructions describing the general properties of each material and accessory to be used in the Work for each type of locker and bench assembly, including instructions, and directions for installation of anchorage devices.

B. Shop Drawings: Submit shop drawings for the fabrication and installation of the Work including layout, elevations, trim, dimensions and details of each locker and bench type, anchorage system and accessory items. Prepare details at not less than 3 in. = 1 ft. minimum scale.

1. Locker Door Schedule: Submit, a complete locker schedule, including types, general locations, sizes, locker numbering and identification system, contiguous construction details, finishes,

latching or locking provisions, and other data pertinent to installation.

C. Samples: Label samples to indicate product, characteristics, and location in the Work. Samples will be reviewed for color and appearance only. Furnish sufficient samples to establish the full range of colors and textures for materials exposed in the finished work. Compliance with other requirements is the responsibility of the Contractor. Provide sample for each locker and bench finish as follows:

1. Locker Metal and Wood Bench Material: 6 in. x 6 in. in size, of each color and finish.

D. Closeout Submittals:

1. Warranties: Special warranties as specified.

2. Two (2) copies of bound maintenance manuals, describing the materials, and procedures for cleaning and maintaining lockers and benches. Include manufacturer's data describing the materials and finishes used in the work.

1.5 QUALITY ASSURANCE

A. Qualified Installer: The entity performing the work of this section must, within the last five (5) consecutive years prior to the bid opening have successfully completed in a timely fashion at least three (3) projects similar in scope, size and type to the required work.

B. Manufacturer Qualifications: The manufacturer shall furnish evidence that the specified materials have been manufactured by the same source and successfully utilized on a yearly basis for a minimum of 5 years on projects of a similar scope to that shown and specified for this Project. Fabricate lockers as a single integral unit with frame, anchors, hardware, accessory parts, fittings and fastenings. Units are to be the standard products, or modifications if required, of one of the listed manufacturers.

1. Single-Source Responsibility: Obtain each type of locker and bench for the entire project through one source from a single manufacturer.

2. Size Variations: Obtain acceptance of manufacturer's standard size units, which may vary slightly from sizes indicated.

C. Requirements of Regulatory Agencies: Comply with applicable requirements of the laws, codes, ordinances and regulations of Federal, State and Municipal authorities. Obtain necessary approvals from the NYC Building Department.

1.6 DELIVERY, STORAGE, AND HANDLING

A. Packing, Shipping, Handling, and Unloading: Pack, ship and handle components in accordance with manufacturer’s instructions. Protect locker and bench components during transit, delivery, storage, and handling to prevent damage, soilage, and deterioration. Cover and keep covered with non-staining protective wrapping. Do not deliver lockers and benches until painting, wet work, grinding, and similar operations that

could damage, soil, or deteriorate materials have been completed in installation areas.

B. Storage and Protection: Store components in a dry, well ventilated space, off the ground and covered with non-staining protective wrapping. Cover and keep covered with non-staining protective wrapping.

1.7 WARRANTIES

A. General: Warranties specified in this Article shall not deprive the City of New York of other rights the City of New York may have under other provisions of the Contract Documents and are in addition to and run concurrent with other warranties made by the Contractor under requirements of the Contract Documents.

1. Special Warranty: Provide a written warranty for a period of (2) two years, warranting that the lockers and benches will be free of defects in material or workmanship and free of operating defects during the warranty period. Warranty shall be signed by the Contractor and the firm awarded the work. Failures, include but are not limited to:

a. Structural failures.

b. Faulty operation of latches and other door hardware.

c. Deterioration of metals, metal finishes and other materials beyond normal weathering.

d. Upon notification of such defect, within the warranty period, make the necessary repairs at the convenience of the City of New York.

1.8 SITE INVENTORY

A. Furnish site inventory that match products installed and that are packaged with protective covering for storage and identified with labels describing contents.

1. Full-size units of the following metal locker hardware items equal to 5 percent of amount installed for each type and finish installed, but no fewer than three units:

a. Locks.

b. Identification plates.

c. Hooks.

PART 2 - PRODUCTS

2.1 MATERIALS

A. Metal Surfaces, General: For fabrication of locker and bench metal work which will be exposed to view in the finished work, use only materials which are smooth and free of surface blemishes including pitting, seam marks, roller marks, rolled trade names and roughness. Remove such blemishes by grinding, or by welding and grinding, prior to cleaning, treating, and applying surface finishes.

1. Cold-Rolled Steel Sheet: ASTM A 1008/A 1008M, Commercial Steel (CS), Type B, suitable for exposed applications.
2. Steel Tube: ASTM A 500, cold rolled.
3. Fasteners: Zinc- or nickel-plated steel, slot-less-type, exposed bolt heads; with self-locking nuts or lock washers for nuts on moving parts.
4. Anchors: Material, type, and size required for secure anchorage to each substrate.

B. Wood for benches: Provide clear, laminated northern hardwood, 1 1/4 inch thick.

C. Provide nonferrous-metal or hot-dip galvanized anchors and inserts on inside face of exterior walls, and elsewhere as indicated, for corrosion resistance.

1. Provide toothed-steel or lead expansion sleeves for drilled-in-place anchors.

2.2 ACCEPTABLE MANUFACTURERS:

A. General: Provide metal lockers (**LKR-01**) as produced by one manufacturer. Layout/configuration as indicated on the drawings.

1. “Building Block 15W Modular Lockers” as manufactured by Heartwork USA.
2. No substitutions allowed.

B. General: Provide benches (**BCH-01** and **BCH-02**) as produced by one manufacturer.

1. Standard and ADA compliant benches as manufactured by ASI Storage Solutions (Bench Top and stainless steel Pedestal) to establish the basis of design and quality standards required but not intended to imply a preference for a specific product.
2. Products of the following manufacturers will be acceptable provided they meet those established standards:
   a. Heartwork USA
   b. List Industries.
   c. Penco Products, Inc.
   d. Republic Storage Systems, Inc.
   e. Or approved equal.

2.3 FABRICATION, GENERAL

A. General: Provide each locker and bench assembly manufactured as an integral unit, complete with components, accessories and fasteners ready for installation.

B. Forming: Form exposed surfaces free from warp, wave and buckle, with corners square, unless otherwise shown. Form molded members straight and true, with welded joints coped or mitered, well formed, and in true alignment. Dress welded joints on exposed surfaces smooth so they are invisible after finishing and flush with adjacent surfaces. Provide attachment devices and fasteners of type required to secure access doors and frames to contiguous support construction.

C. Reinforcing: Reinforce members and joints with structural shapes and plates in concealed locations, as necessary for adequate strength and rigidity. Provide concealed fastenings unless otherwise shown. Locate necessary exposed fastenings in an orderly pattern, in accordance with reviewed shop drawings. Separate dissimilar metals with dielectric separator to prevent galvanic action. Do not extend coatings onto exposed surfaces

D. Construction: Square, rigid, without warp, exposed edges safe to touch. Frames welded together; other joints welded, bolted, or riveted as standard with manufacturer. Grind exposed welds flush. Do not expose bolts or rivet heads on fronts of locker doors or frames.

2.4 LOCKERS

A. Fabrication General: Each locker shall have an individual door and frame, individual top, bottom, back and shelves with common intermediate uprights separating compartments. Lockers shall be fabricated square, rigid and without warp. Doors shall be flat and free of distortion.

B. Door Frame: Door frame members to be not less than 18 gauge formed to a channel shape.

C. Body: Bolt spacing in locker body construction not to exceed 9 in. o.c. Locker body components shall be made of cold rolled steel specially formed for added strength and rigidity and to ensure tight joints at fastening points.

D. Doors: Doors shall be formed from one piece 18 gauge cold rolled sheet steel.

E. Door Handle: Integrated door, handle and lock design.

F. Hinges: Heavy-duty concealed hinges. Doors over 48 in. high shall have three hinges, all other doors shall have two hinges.

G. Number Plates: Each locker to be supplied with a polished aluminum number plate.

H. Interior Equipment: As indicated on drawings or as follows: Single-tier lockers 48-1/2 in. or higher shall have a hat shelf located approximately 9 in. below the top of locker; if less than 18 in. deep, locker shall have three single-prong hooks and one double-prong ceiling hook. Single tier lockers 18 in. or more in depth shall have a coat rod instead of a ceiling hook. 30 in. & 36 in. high lockers shall have three single-prong wall hooks and one double-prong ceiling hook. Hooks to be attached with two bolts per hook. 20 in. & 24 in. high lockers to have three wall hooks for 12 in. wide, and four wall hooks for 15 in. wide and wider.

I. ADA. Compliant Lockers: ADA. compliant lockers shall have recessed handles and shall be single tier or the lower opening of a double tier locker. Locker bottom shall be a minimum of 9 in. off the floor, or an extra shelf placed 9 in. off the floor. Single tier lockers shall have a shelf 48 in. off the floor. Doors assigned for handicapped use shall have an appropriate symbol sign.

2.5 BENCHES

A. Provide bench units with overall assembly height of 17-1/2 in.

B. Bench Tops: Manufacturer's one-piece units, with straight corners and edges.

C. Size: Minimum 9-1/2 in. wide (plus ADA compliant unit) by 1-1/4 in. thick.

D. Laminated clear maple hardwood with clear lacquer finish.

E. Fixed Pedestals: Manufacturer's stainless steel pedestal supports, with predrilled fastener holes for attaching bench top and anchoring to floor, complete with fasteners and anchors.

1. Powder coat finish matching color of lockers.

2.6 LOCKER ACCESSORIES:

A. Continuous Metal Base: 18-gage stainless steel, fabricated in lengths as long as practicable to enclose base of lockers without additional fastening devices. Factory- finish metal base to match lockers.

1. Color: Custom color as selected by Engineer.

2.7 FINISHES

A. Finish for Metal Lockers and Other Metal Components: Manufacturer's standard shop preparation primer compatible with finish paint coats.

1. Thermoset Powder Coat Finish: Provide thermoset powder coat heat catalyzed organic polyester or urethane powder coat finish applied over conversion coat providing a smooth, uniform and durable finish.

2. Application: Entire system be shop applied to exposed surfaces, under suitable conditions as approved by the powder paint manufacturer, so that finished paint surface is smooth, unbroken, free of pinholes, orange peel, sags or runs.

3. Touch-up: Finish paint shall have the capability to be touched-up in the field without noticeable difference in color, texture, specular gloss or dry film thickness.

4. Color: Custom color as selected by Engineer.

B. Finish for Wood Benches:

1. Finish: One coat, deep-penetrating sealer, and two coats of heavy body, high- impact resistant lacquer.

PART 3 - EXECUTION

3.1 GENERAL

A. Manufacturer's Instructions: Prepare substrates and install the work of this Section, including, components, and accessories in accordance with the manufacturer's instructions, except where more stringent requirements are shown or specified, and where project conditions require extra precautions or provisions to ensure satisfactory performance of the Work.

3.2 EXAMINATION

A. Verification of Conditions: Examine the areas to receive the Work and the conditions under which the Work would be performed. Remedy conditions detrimental to the proper and timely completion of the Work. Do not proceed until unsatisfactory conditions have been corrected.

3.3 PREPARATION

A. Substrate Acceptability: Commencement of installation shall constitute acceptance of substrate conditions by the Installer

B. Deliver items which are to be built into the work of other sections in time so as not to delay the progress of the Work.

3.4 COORDINATION

A. Coordinate sizes and locations of concrete bases for metal lockers.

B. Coordinate sizes and locations of framing, blocking, furring, reinforcements, and other related units of work specified in other Sections to ensure that metal lockers can be supported and installed as indicated.

3.5 INSTALLATION

A. Install metal lockers at locations shown in accordance with manufacturer's written instructions so that completed installation is plumb, level, rigid, and flush installation in perfect operating condition.

B. Space fastenings about 60” o.c., unless otherwise recommended by manufacturer, and apply through back-up reinforcing plates where necessary to avoid metal distortion; conceal fasteners insofar as possible.

C. Install metal base, trim, fillers and sloping tops where indicated, using concealed fasteners.

D. Do not erect members which are warped, bowed, deformed or otherwise damaged to such extent as to impair strength or appearance. Remove and replace members damaged in the process of erection.

E. Fixed Locker Benches: Provide no fewer than two pedestals for each bench, uniformly spaced not more than 72 in. apart. Securely fasten tops of pedestals to undersides of bench tops, and securely anchor bases to floor. Provide stainless steel hardware.

F. Dielectric Separator: Separate dissimilar metals and metals in contact with concrete or masonry with a dielectric separator.

G. Upon completion of installation, lubricate and adjust doors to operate easily free from warp, twist or distortion and fitting tightly for entire perimeter.

3.6 CLEANING

A. Cleaning: Upon completion of installation of metal lockers and benches and adjacent finishes, clean exposed metal surfaces as recommended by the manufacturer.

3.7 PROTECTION

A. Protect the Work from damage during the construction period so that it will be without indication of wear or damage at the time of acceptance.

END OF SECTION

SECTION 13 34 70 – FABRICATED CONCRETE BUILDINGS

PART 1 - GENERAL

1.1 SUMMARY

A. General: Provide fabricated concrete building in accordance with requirements of the Contract Documents.

B. Related Work:

1. Foundation and slab-on-grade for fabricated concrete buildings is furnished and installed under this Section per the requirements of the Cast-in-Place Concrete work specifications.

2. Architectural Concrete Textured Finishes for fabricated concrete buildings is furnished and installed under this Section per the requirements of Section 03 33 00 "Architectural Concrete Textured Finishes".

3. Miscellaneous steel lintels, relieving angles, other support steel and accessories for fabricated concrete buildings is furnished and installed under this Section per the requirements of Section 05 50 00 "Metal Fabrications".

4. Sheet waterproofing and underslab vapor retarder for fabricated concrete buildings is furnished and installed under this Section per the requirements of Section 07 13 00 "Sheet Waterproofing".

5. Building insulation for fabricated concrete buildings is furnished and installed under this Section per the requirements of Section 07 23 00 "Building Insulation".

6. Fluid-applied roofing for fabricated concrete buildings is furnished and installed under this Section per the requirements of Section 07 55 56 “Fluid- Applied Membrane Roofing”.

7. Sheet metal flashing and trim for fabricated concrete buildings is furnished and installed under this Section per the requirements of Section 07 62 00 "Sheet Metal Flashing and Trim".

8. Sealants and joint fillers for fabricated concrete buildings is furnished and installed under this Section per the requirements of Section 07 92 50 "Joint Sealants".

9. Steel doors and frames for fabricated concrete buildings is furnished and installed under this Section per the requirements of Section 08 33 00 “Hollow Metal Doors and Frames”.

10. Overhead coiling doors and frames for fabricated concrete buildings are furnished and installed under this Section per the requirements of Section 08 33 23 “Overhead Coiling Doors”.

11. Finish Hardware for fabricated concrete buildings is furnished and installed under this Section per the requirements of Section 08 71 00 “Finish Hardware”.

12. Paints and Coatings for fabricated concrete buildings is furnished and installed under this Section per the requirements of Section 09 90 00 “Paints and Coatings”.

1.2 SYSTEM DESCRIPTION

A. Roof: Roof panel shall have a minimum of 6” slope from peak to edge. The roof shall extend 4” beyond the wall panel and have a turndown design which extends ½” minimum below the top edge of the wall panels to prevent water migration into the building along top of wall panels. Roof shall also have an integral architectural ribbed edge.

B. Roof to Wall Joint Keyway: Grout in keyways shall be a magnesium phosphate material or equal, prepared and placed per the manufacturer’s recommendations. Apply a polysulfide, elastomeric joint sealant to the top of the grouted keyway, installed per manufacture’s recommendations.

C. Walls: Wall panels as indicated on drawings.

D. Cast-in-place slab must have a ½” step-down around the entire perimeter to prevent water migration into the building along the bottom of wall panels.

1.3 PERFORMANCE REQUIREMENTS

A. Structural requirements for these fabricated concrete buildings shall be per structural requirements of “Tennis Building” and “Track Building” of project Contract Number: SANDRESM1.

1.4 REFERENCES

A. General: Comply with the applicable provisions and recommendations of the referenced standards except as modified by governing codes and by the Contract Documents. Where a recommendation or suggestion occurs in the referenced standards, such recommendation or suggestion shall be considered mandatory. In the event of conflict between referenced standards, this specification or within themselves, the more stringent standard or requirement shall govern.

1. ACI-318-11: Building Code Requirements for Structural Concrete and Commentary
2. ASCE/SEI 7-10: Minimum Design Loads for Buildings and Other Structures
3. New York City Building Code.
4. PCI Design Handbook, 7th Edition
5. Concrete Reinforcing Institute, Manual of Standard Practice

1.5 SUBMITTALS

A. Product Data: Submit manufacturer’s literature and specifications describing the general properties of each material and accessory to be used in the Work.

B. Shop Drawings: Submit shop drawings for the fabrication and installation of the Work. Prepare details at not less than 3 in. = 1 ft.-0 in. minimum scale.

1. Submit shop drawings for fabricated concrete buildings. Submit shop drawings for fabrication, bending and placement of reinforcement bars and details for reinforced concrete. Shop drawings shall bear the seal of a Professional Engineer licensed in the State of New York.

2. Submit shop drawings for corners and other special conditions.

C. Manufacturers' product literature shall be provided for any plumbing, electrical, and miscellaneous installed fixtures demonstrating compliance with these specifications.

D. Samples: Label samples to indicate product, characteristics, and location in the Work. Samples will be reviewed for color and appearance only. Furnish sufficient samples to establish the full range of colors and textures for materials exposed in the finished Work. Compliance with other requirements is the responsibility of the Contractor.

1. Provide (2) 24 in. sq. samples of each type precast unit.

2. Anti-Graffiti Coatings: Coat half of each sample block with the anti-graffiti coating as specified herein.

E. Engineering Services: Submit for Engineer's action. Provide calculations to verify fabricated concrete buildings provided meet specified performance requirements. Calculations shall bear the seal of a Professional Engineer licensed in the State of New York.

F. List of Materials Used in Constructing Mockups: Submit a list of generic product names together with manufacturers, manufacturers' product names, model numbers, lot numbers, batch numbers, source of supply, and other information as required to identify materials used. Include mix proportions for concrete. Submittal is for information only. Neither receipt of list nor approval of mockup constitutes approval of deviations from the Contract Documents, unless such deviations are specifically approved in writing.

G. Quality Control Submittals: Submit the following:

1. Test Reports:

a. Preconstruction and field test reports for mortar indicating conformance of mortar materials to property specifications of ASTM C270.

b. Test reports, per ASTM C780, for mortar mixes required to comply with property specification.

c. Preconstruction and field test reports of grout in conformance with ASTM C1019.

d. Certified test reports indicating compliance with requirements for the "anti-graffiti" coating. In addition, provide manufacturer's field reports for "anti-graffiti" coating.

2. Certificates:

a. Document Review: Before commencing work, submit a written statement signed by the Contractor and the Applicator certifying that the Contract Documents, shop drawings and product data have been reviewed with material manufacturers' qualified technical representatives and that they agree the selected materials are proper, compatible with contiguous materials and adequate for the application shown.

3. Procedures: Submit, for Engineer's information, hot and cold-weather construction procedures evidencing compliance with applicable requirements.

H. Closeout Submittals: Submit the following:

1. Warranties: Special warranties as specified.

2. Maintenance Data: Two (2) copies of an assembled and bound maintenance manual, describing the materials and procedures to be followed in cleaning and maintaining the "anti-graffiti" coating. Include manufacturer's brochures describing the actual materials used in the work.

1.6 QUALITY ASSURANCE

A. The precast concrete building producer shall be a plant-certified by either the National Precast Concrete Association (NPCA) or The Precast/Prestressed Concrete Institute (PCI).

B. Single Source Responsibility:

1. Single Source Responsibility: Obtain precast concrete building from one source of a single manufacturer. Obtain accessory products used in conjunction with precast concrete building from the Precast concrete building manufacturer, from sources acceptable to the manufacturer, and as specified. The manufacturer shall furnish evidence that the specified materials have been manufactured by the same source and successfully utilized on a yearly basis for a minimum of 5 years on projects of a similar scope to that shown and specified for this Project.

2. Single Source Responsibility Anti-Graffiti Coating: Obtain anti-graffiti coating from one source of a single manufacturer for the entire project. Obtain accessory products used in conjunction with anti-graffiti coating from the anti- graffiti coating manufacturer or from sources acceptable to the manufacturer. The manufacturer shall furnish evidence that the specified materials have been manufactured by the same source and successfully utilized on a yearly basis for a minimum of 5 years on projects of a similar scope to that shown and specified for this Project.

C. Regulatory Requirements: Comply with applicable requirements of the laws, codes, ordinances and regulations of Federal, State and Municipal authorities. Obtain necessary approvals from the NYC Building Department.

1. Requirements for fire–rated or lateral support conditions are not necessarily fully defined on the Drawings or specified; comply with applicable regulations.

D. Qualified Applicator: The entity performing the anti-graffiti coating of this section must, within the last five (5) consecutive years prior to the bid opening have successfully completed in a timely fashion at least three (3) projects similar in scope, size and type to the required work. In addition, the entity must be approved, or certified, or authorized by the manufacturer, and must be eligible to receive the manufacturer's warranty.

E. Mock-Up(s):

1. Sample Wall:

a. Build sample full height wall(s) as detailed on contract documents, provide 4 foot wide wall and roof return min. unless otherwise shown. The Work of this Project shall be constructed on approval of workmanship, joint sizes, construction and control joints, vertical alignment, parapet conditions, door head and sills, flashing installation, door installation and colors of the sample wall.

1) An initial 4 ft. x 4 ft. x full depth wall showing exterior and interior face shall be constructed before authorization to complete the sample wall.

b. Clean mock-ups with materials and techniques intended for use on the Project.

c. Apply "anti-graffiti" coating to mockup entire exterior face. Demonstrate "anti-graffiti qualities by utilizing 5 standard graffiti marking mediums and removing graffiti.

d. Obtain acceptance of visual qualities of each sample panel before proceeding with the final work.

F. Pre-Installation Meeting: Prior to the start of the Work, meet at the Project site to review methods and sequence of construction, special details and conditions, standard of work, testing and quality control requirements, job organization and other pertinent topics related to the Work.

1.7 DELIVERY, STORAGE AND HANDLING

A. Packing, Shipping, Handling, and Unloading: Deliver materials, other than bulk materials to Project site in manufacturer's unopened containers, bundles, pallets or other standard packaging devices; fully identified with name, type, grade, color and size.

B. Storage and Protection: Store on platforms off the ground, in a dry location and protect from weather, soiling and damage. Store aggregates where grading and other required characteristics can be maintained and contamination avoided. Store accessories including metal items to prevent corrosion and accumulation of dirt and oil.

C. Metal Materials: Do not use metal reinforcing, ties, or other components which are coated with loose rust or other deleterious matter that will reduce or destroy bond with mortar and grout.

1.8 PROJECT/SITE CONDITIONS

A. Installation Requirements

1. Cold Weather Conditions: Do not erect work when the temperature is below 40 deg. F. unless provisions for heating and drying the materials and protecting the completed work. Do not build upon frozen work. Do not lay units having a film of water or frost on their surfaces.

2. Hot Weather Conditions: Do not erect work when the temperature is above 100 deg. F. or 90 deg. F with a wind velocity greater than 8 mph.

B. "Anti-Graffiti" Coating Application Conditions: Maintain ambient temperature above 40 degrees F during and 24 hours after installation. Do not proceed with application on materials if ice or frost is covering the substrate. Do not proceed with application if ambient temperature of surface exceeds 100 degree F. Do not proceed with the application of materials in rainy conditions or if heavy rain is anticipated with 4 hours after application.

1.9 WARRANTIES

A. Warranties specified in this Article shall not deprive the City of New York of other rights the City of New York may have under other provisions of the Contract Documents and are in addition to and run concurrent with other warranties made by the Contractor under requirements of the Contract Documents.

1. Special Warranty, Anti-Graffiti Coating: Provide a single source manufacturer's labor and material performance warranty, for a period for two (2) years stating that the anti-graffiti coating will be free of defects related to workmanship or material deficiency. Defective areas, (where anti-graffiti coating effectiveness does not meet the specified limits.) in the opinion of the City of New York, shall be retreated by the system manufacture Upon notification of defects, within the warranty period, reseal areas at the convenience of the City of New York.

PART 2 – PRODUCTS

2.1 MANUFACTURER

A. Fabricated Concrete Building Manufacturers:

1. Fabricated concrete building, “Model 4422”, customized as indicated on drawings and as manufactured by Easi-Span shall be considered to be the basis of design but not intended to imply

a preference for a specific product. Other manufacturers making equivalent products to be considered may include the following:

a. Oldcastle Precast.

b. Smith-Midland.

c. Shea Concrete Products.

d. Or approved equal.

2.2 MATERIALS

A. Concrete: Steel-reinforced, 5000 PSI minimum 28-day compressive strength, air- entrained (ASTM C260).

B. Reinforcing Steel: ASTM A615, grade 60 unless otherwise specified.

C. Welded Wire Fabric: ASTM 185, Grade 65

D. Post-tensioning Strand: Roof sections shall be post-tensioned in the field after grout keyway is filled and has cured to the required PSI strength. Post-tensioning strand shall be 41K Polystrand CP50, ½" 270 KSI Seven-Wire strand, enclosed within a greased plastic sheath (ASTM A416). There will be a minimum of three transverse post-tensioning cables connecting roof and floor (if provided) sections together to provide a watertight joint. To ensure a watertight design, no alternate methods shall be substituted for the post-tensioning.

E. Caulking: All joints between panels shall be caulked on the exterior and interior surface of the joints. Exterior caulk reveal to be 3/8" x 3/4" deep so that sides of joint are parallel for proper caulk adhesion. Back of the joint to be taped with bond breaking tape to ensure adhesion of caulk to parallel sides of joint and not the back.

1. Caulking shall be "756 SMS Building Sealant" (Dow Corning Corp.) or the following:

a. "SilPruf NB SCS9000 " (Momentive Performance Materials Inc.).

b. "Non-Staining Silicone Rubber Sealant" (Sika Corp).

c. Or approved equal.

F. Panel Connections: All panels shall be securely fastened together with 3/8" thick steel brackets. Steel is to be of structural quality, hot-rolled carbon complying with ASTM A36 and hot dipped galvanized after fabrication. All fasteners to be ½" diameter bolts complying with ASTM A325 for carbon steel bolts. All inserts for corner connections must be secured directly to form before casting panels. No floating-in of connection inserts shall be allowed. Wall panels shall be connected to cast-in-place floor slab using expansion anchors providing adequate embedment by manufacturer.

1. Cast-in anchors used for panel connections to be Dayton-Superior F-63 coil inserts or the following:

a. CI-63 by ALP Supply

b. Equal from Meadow Burke

c. Or approved equal.

2.3 ACCESSORIES

A. Doors and Frames: Shall comply with Steel Door Institute "Recommended Specifications for Standard Steel Doors and Frames" (SDI-100) and as herein specified. All door and frame galvanizing shall be in accordance with ASTM A924 and A653, A60 minimum coating thickness.

1. The buildings shall be equipped with 3'-0" x 6'-8" x 1-3/4" thick insulated, 18 gauge, metal doors with 16-gauge frames (to meet wall thickness). Doors to have flush top cap. Doors and frames shall be factory bonderized and painted with one coat of rust inhibitive primer and one finish coat of enamel paint.

2. Doors and frames shall meet SDI standard Level 2, 1¾" heavy duty.

3. Approved manufacturers: Republic, Steelcraft, Ceco, Black Mountain, Pioneer, Curries, Mesker, MPI, Door components or equal

4. Approved distributor: Integrated Entry Systems

B. Door Hardware:

1. See Section 08 71 00 "Finish Hardware" for specified hardware to be furnished and installed under this Section.

C. Overhead Coiling Doors:

1. See Section 08 33 23 "Overhead Coiling Doors" for specified overhead coiling doors to be furnished and installed under this Section.

2.4 FINISHES

A. Interior of Building: Smooth form finish on all interior panel surfaces unless exterior finish is produced using a form liner, then smooth hand-troweled.

B. Exterior of Building: Custom Architectural precast concrete finish: As indicated on drawings and matching approved samples and mock-up.

1. See Section 03 33 00 "Architectural Concrete Textured Finishes".

2.5 FLUID-APPLIED ROOFING

A. See Section 07 55 56 "Fluid-Applied Membrane Roofing" for fluid-applied membrane roofing to be furnished and installed under this Section.

2.6 ANTI-GRAFFITI COATING

A. Concrete Anti-Graffiti Coating at exterior face (public side): Provide non-sacrificial, water borne, breathable, non-yellowing, UV stable, VOC compliant, anti-graffiti coating. Provide NYSDOT item number 559.90010011.

2.7 SOURCE QUALITY CONTROL

A. Contractor's Quality Control Responsibilities: Contractor is solely responsible for quality control of the Work.

B. General: Provide and maintain an effective Quality Control program and perform sufficient inspections, surveys and tests of the Work, including those of other trades, to ensure compliance with the Contract Documents. Furnish appropriate facilities, accurately calibrated instruments and testing devices required to perform the quality control operations and with sufficient work forces to cover the construction operations within the actual construction sequences. Coordinate this work with the quality control requirements of other technical Sections of the Specifications and with requirements of the City of New York and the NYC Building Department.

PART 3 - EXECUTION

3.1 GENERAL

A. Manufacturer's Instructions: Prepare substrates and erect the work of this Section, including components and accessories in accordance with the manufacturer's instructions, except where more stringent requirements are shown or specified, and where project conditions require extra precautions or provisions to ensure satisfactory performance of the Work.

3.2 EXAMINATION

A. Verification of Conditions: Examine the areas to receive the Work and the conditions under which the Work would be performed. Remedy conditions detrimental to the proper and timely completion of the Work. Do not proceed until unsatisfactory conditions have been corrected. Examine rough-in and built-in construction to verify actual locations of piping and other connections prior to installation.

3.3 SITE PREPARATION

A. Slab on grade to be minimum 6" thick and 4,000 psi steel reinforced concrete and as required by project conditions. Slab to be level within 1/8" in both directions and capable of supporting loads imposed by the structure. Floor slab must have a ½" step-down around the entire perimeter to prevent water migration into the building along the bottom of wall panels.

3.4 INSTALLATION

A. Surface Preparation: Clean surfaces before installation to remove dirt, dust, debris, loose material and other foreign matter detrimental to proper bonding.

B. Lay Out of Walls: Lay out walls in advance for accuracy with uniform joint widths and for accurate locating of openings, movement-type joints, returns, and offsets. Field cutting of whole panels is not permitted.

C. Lay Out and Maintenance of Plumb: Lay panels plumb, true to line with level, plumb and true; except as may be otherwise indicated or specified. Comply with tolerances as specified in "References" and the following:

   a. For conspicuous vertical lines, such as external corners, door jambs, reveals, and expansion and control joints, do not vary from plumb by more than 1/4 in. in 20 ft., or 1/2 in. maximum.

   b. For conspicuous horizontal lines, do not vary from level by more than 1/4 in., in 20 ft., or 1/2 in. maximum.

D. Anchor, tie, reinforce and bond panels at corners and intersections in accordance with the applicable requirements of the NYC Building Department.

E. Leave openings for equipment to be installed before completion. After installation of equipment, complete work to match construction immediately adjacent to the opening.

F. Cutting, patching and repairing in connection with work as required to accommodate the work of other trades shall be performed under this Section.

G. Use of Motor Driven Diamond Saw: Use motor driven diamond saw designed to cut units with clean sharp corners. Cut units as required to provide pattern shown and to fit adjoining work neatly. Use full units without cutting wherever possible. Avoid the use of less than half-size units at corners, jambs and at other locations.

H. Joints: Tool exposed joints slightly concave unless otherwise shown. Lay unit with uniform joint widths.

I. Built-In Work: Build in frames, struts, hangers, miscellaneous metal and other items of work furnished under other Sections. Prepare for, build in and protect flashings, reglets, anchors and other similar items occurring in connection with work of this Section. Set and grout loose lintels. Build in anchors, furnishing such as may be required exclusively by reason of work under this Section.

   a. Access Doors, Frames and Access Panels: Install access doors, frames and access panels occurring in construction where shown and required for access to mechanical and electrical installations and equipment.

   b. Chases, Slots, Reglets or Openings: Chases, slots, reglets or openings necessary for the proper installation of work of other trades shall be formed as required. Keep chases and reglets free from mortar or other debris.

3.5 LAYING WALL AND ROOF UNITS

A. Install wall and roof panels in accordance with the manufacturer's instructions, except where more stringent requirements are shown or specified, and where project conditions require extra precautions or provisions to ensure satisfactory performance of the Work.

B. Control Joints: Construct continuous control joints to provide an unbroken vertical separation through the entire thickness of walls, in the manner shown by the details, complying with referenced standards and at locations shown. Locations of control joints not shown shall be approved by the Engineer prior to the start of construction. Where locations are not shown, construct control joints throughout the unbroken length of walls as follows:

1. Not to exceed twenty 25 ft. on center in same plane as wall unless otherwise shown.

2. Where a change occurs in wall height or thickness, and at chases and recesses in the wall.

3.6 FLUID-APPLIED ROOFING APPLICATION

A. Manufacturer's Instructions: Prepare substrates and proceed with the work of this Section in accordance with the manufacturer's instructions, except where more stringent requirements are shown or specified, and where project conditions require extra precautions or provisions to ensure satisfactory performance of the Work.

B. Manufacturer's Technical Representative: At the start of the installation and periodically as work progresses provide the services of the fluid-applied roofing membrane manufacturer's technical representative at the job site as often as deemed necessary by the manufacturer to advise on phases of this work.

3.7 ANTI-GRAFFITI COATING APPLICATION

A. Manufacturer's Technical Representative: At the start of the installation and periodically as work progresses provide the services of the anti-graffiti manufacturer's technical representative at the job site as often as deemed necessary by the manufacturer to advise on phases of this work.

B. Surface Preparation: CMU surfaces to receive sealer shall be cleaned of dirt, oil, graffiti, grease, laitance, and other contaminants. All other surfaces shall be cleaned by mid-pressure water (1500 psi). Pressure wash all surfaces scheduled to receive anti-graffiti coating unless manufacturer recommends other acceptable method of cleaning. Remove dirt, dust and materials that will interfere with the proper and effective application of the anti-graffiti coating. Check the compatibility of all sealants and other material contiguous to or scheduled to be used with the anti-graffiti coating. Protect glass, metal, plastic and other non-pourous substrates from overspray

C. Application

1. Anti-graffiti coating shall be applied as per manufacturer’s written

application instructions and recommendations. Apply as a minimum 2 full coats (depending on porosity of CMU) allowing first coat to dry as per manufacturer's requirements.

2. Apply at temperature and weather conditions recommended by the manufacture or written in this specification. Surface residue shall be brushed out thoroughly until they completely penetrate into the surface. Protect treated areas from rain and other surface water for a period of not less than four hours after application.

3.8 CITY OF NEW YORK'S MONITORING ACTIVITIES

A. City of New York's Testing and Inspection Program: Testing and inspection will be performed, at any time during the progress of the Work, by an independent testing agency retained by the City of New York. Furnish materials and access to the Work as required by the City of New York's Testing Agency.

3.9 ADJUSTING

A. Remove and replace defective materials; correct defective workmanship; leave work clean.

3.10 CLEANING

A. Removal of Excess Materials: Execute work in as clean a manner as possible, removing excess materials and mortar droppings daily. Remove mortar droppings on connecting or adjoining work before it has attained final set

3.11 PROTECTION

A. General: Protect work from rain and snow until the work is complete.

B. Stain Prevention: Prevent staining the face of work to be left exposed or painted. Remove immediately any grout, mortar, and soil that come in contact with work. Protect base of walls from rain-splashed mud splatter by means of coverings spread on ground and over wall surface. Protect sills, ledges, and projections. Protect surfaces of window and door frames, as well as similar products with painted and integral finishes.

END OF SECTION

SECTION 21 13 00 – SPRINKLER SYSTEM

PART 1 - GENERAL

1.01 DESCRIPTION OF WORK

A. Provide a wet pipe automatic sprinkler system as specified herein, as shown on the Drawings and as needed for a complete and proper installation. Product specific requirements are contained herein; Section 15301, General Provisions for Fire Protection Systems Work, shall be referred to for general requirements.

1.02 RELATED SECTIONS

A. Division 9 Sections

B. Division 15 Sections

C. Division 16 Sections

1.03 DESIGN REQUIREMENTS

A. Based on the fire protection (sprinkler) drawings provided in the Contract Documents, a third party professional engineer licensed in NY State having 5 years experience in the design and installation of fire protection systems shall be engaged by the Contractor to provide hydraulic calculations and Drawings meeting the design parameters indicated in paragraph 1.03C below. The Drawings shall comply with applicable codes and incorporate the final pipe sizes, pipe locations, and sprinkler head locations for the fire protection system after coordination with the other trades. The prepared Drawings and calculations will be reviewed and approved the Engineer.

B. The Contractor's engineer is responsible for filing all subsequent revisions/amendments and incorporating as-built conditions into filed plans prior to inspection by the Engineer. These revisions/amendments must be filed in a timely manner to allow for full inspection of the system. Installed conditions that do not match the filed documents will be rejected. The Contractor is also responsible for securing inspection for final acceptance of the installed sprinkler system. Filed and approved Drawings must be available for the field inspection and the filing shall have been completed in sufficient time to allow for the inspection to take place while all piping is exposed.

C. Design Parameters

1. Sizes of risers, mains, sub-mains, and the originally selected pump(s) are not to be changed from those shown on the Contract Drawings unless shown to be inadequate. To make changes to these items, the Contractor's engineer must document design flaws in the original system design with hydraulic calculations prepared following the guidelines outlined in Chapter 11 of NFPA 13-07 as amended in Appendix Q102 of the 2014 NYC Building Code. Locations of risers shown on the Contract Drawings shall not be revised without approval of the Engineer. Deviations will be allowed for sizing of branch piping and the number of sprinkler heads per branch line contingent upon availability of water supply and compliance with the sizing guidelines outlined in Section 14.5 of NFPA 13-07 for Light Hazard, Ordinary Hazard and Extra Hazard Occupancies. Use of the "Pipe Schedule Method" in sizing piping of the system design is not permitted.

2. Hydraulic calculations submitted for plan approval and in support of revisions to size of branch piping and relocation and/or revision of number of sprinkler heads shall take into account and maintain a minimum safety factor of 10 psi, which is part of the original design. The 10 psi safety factor is to be applied to the street pressure as indicated by the hydrant flow test, i.e. the available street pressure as indicated by the hydrant flow test is to be reduced by 10 psi and the resulting reduced street pressure together with the pump pressure rise shall be shown to be capable to adequately supply the Contractor's sprinkler system.

3. If extended coverage quick-response sprinklers are employed with the intent of reducing the system area of operation, the density for 1500 sq. ft shall be used. In addition, the number of sprinklers in the design area shall never be less than five (5).

4. The capacity of the originally selected pump shall be verified to be adequate to supply the water demand for the system as revised by the Contractor's engineer. If inadequate, the Contractor's engineer shall resize the pumps as required and reflect the resizing on the amended Drawings.

1.04 SUPPLEMENTAL SUBMITTALS

A. Product Data: Certificate for Hose Threads: Verify that the hose threads on Fire Department connections match the threads on equipment used by the New York City Fire Department.

B. Submit copies of all permits and approved drawings issued by the New York City Building Department.

C. Shop Drawings

1. Complete sprinkler system layout indicating the locations of sprinkler heads, devices, and accessories. Include separate details of special or not easily visualized piping arrangements and inspector's test valves and connections.

2. Hydraulic calculations shall be complete and cross referenced to the appropriate drawing sheets.

3. Wiring Diagrams: Power, signal, and control wiring. Differentiate between manufacturer-installed and field-installed wiring.

D. Test Reports as specified in the Field Quality Control Article.

E. Certification of Installation: Submit certificate upon completion of sprinkler work, which indicates that work has been tested in accordance with NFPA 13-**07**, as amended by the NY City Building Code, and also that system is operational, complete and has no defects.

F. Certificate of Completion of Piping Painting.

G. Certificates of Calibration for all test equipment.

H. Maintenance data: Include an instruction manual describing the operation and maintenance of the system in the maintenance manual.

I. Maintenance materials: Sprinkler heads, steel cabinet, wrench, caps and chains

1.05 SUPPLEMENTAL QUALITY ASSURANCE

A. Codes and Standards

1. NFPA Compliance: Install fire protection systems in accordance with NFPA 13-07: Standard for the Installation of Sprinkler Systems.

2. UL Compliance: Provide sprinkler products in accordance with UL standards; provide UL label on each product.

3. New York City Building Code: Comply with the requirements of the 2014 NYC Building Code and with the Rules and Regulations of the Building Department, The Board of Standards and Appeals, and The Division of Fire Prevention of the Fire Department.

4. Fire Department/Marshal Compliance: Install sprinkler systems in accordance with local regulations of Fire Department or Fire Marshal.

5. Screw Thread Connections: Comply with local Fire Department/Marshal regulations for sizes, threading and arrangement of connections for fire department equipment to Fire Department connections.

B. All gauges, instruments and test devices shall be provided with a certificate of calibration and calibration curve or letter indicating that a minimum of five (5) test points have been calibrated. The certificate and letter must show the date of last calibration. The calibration date must be within a year of the testing date.

1.06 EXTRA MATERIALS

A. Heads: For each style and temperature range required, furnish additional sprinkler heads, amounting to six heads when fewer than 300 heads are installed and twelve heads when between 300 and 1200 heads are installed. All the spare heads will be enclosed in a steel cabinet with a special sprinkler wrench to be delivered to the Authority. Obtain a receipt.

B. Deliver also two spare caps and chains for each Fire Department connection. Obtain a receipt.

PART 2 - PRODUCTS

2.01 MATERIALS AND MANUFACTURERS

A. General:

1. Provide piping materials and factory fabricated piping products of sizes, types, pressure and temperature ratings, and capacities as indicated on the final approved Drawings and these specifications. Sizes of risers, mains, and sub-mains are not to be changed from those shown on the Contract Drawings, except as indicated in paragraph 1.03D above.

2. Provide fittings of materials that match pipe materials used in the sprinkler systems.

B. Identification: Provide identification complying with the following listing:

1. Fire Protection Piping: Plastic pipe markers (color identification: red).

2. Fire Protection Valves: Plastic valve tags: (valves painted green)

3. Fire Protection Signs: Provide the following signs:

   a. At each sprinkler valve, sign indicating what portion of system valve controls.

   b. At each outside alarm device, sign indicating whom to call if device is activated.

C. Piping: All sprinkler piping shall be UL Listed and FM approved. Provide pipes, fittings, specialties, supports and anchors as shown on the Drawings, and complying with the following listing:

1. Aboveground Pipe, Within the Building

   a. In buildings not exceeding 300 ft in height above grade and for pressure up to 300 psi, pipe shall be schedule 10 or 40 standard black steel as per ASTM A53, A135, A795. Pipe wall thickness for roll-grooved or welded shall be 0.134" minimum for pipe sizes up to 6" and 0.188" minimum for pipe diameters 8" and 10".

      1) Pipe sizes 2½" and above

         a) Schedule 40 piping with threaded ends, roll-grooving, or welded joints and fittings.

         b) Schedule 10 piping shall only be permitted when joined with either roll-grooved end fittings or welded joints and fittings.

      2) Pipe sizes 2" and below

         a) Schedule 40 piping with threaded ends, roll-grooving, or welded joints and fittings.

         b) Schedule 10 with welded joints and fittings.

   b. Not Used.

   c. Fittings shall be black, threaded malleable cast iron or flanged cast steel and shall have a pressure rating of 350 psi water working pressure. Pressure ratings shall be cast in or on the fittings.

2. Mechanical Coupling Type Fittings:

   a. The use of mechanical coupling type fittings on sprinkler system in lieu of threaded fittings or flanged fittings or grooved fittings is acceptable in sizes 2" to 8" inclusive. The mechanical couplings shall be self-centering and shall engage and lock the grooved pipe and/or fittings in a positive couple while allowing for some degree of angular pipe deflection, contraction and expansion. Each coupling shall consist of a malleable iron or ductile iron housing in two or more segments, a single molded composition sealing gasket, and two or more steel oval neck track bolts with hex nuts.

   b. Flexible couplings shall be Style-77 as manufactured by Victaulic Company of America, Gruvlok Fig. 7001 by Anvil, Shurjoint #7707 by Shurjoint Piping Products or approved equal. Entire coupling installation including pipe grooving shall be performed in accordance with the manufacturer's instructions. Only couplings,

together with their respective grooved end pipe fittings having fire department approval will be accepted.

3. Not Used.

D. Hangers & Supports: Adjustable steel clevis hangers, adjustable steel band hangers or adjustable band hangers for horizontal-piping hangers and supports.

1. Two-bolt riser clamps for vertical piping supports.

2. Steel turnbuckles and malleable iron sockets for hanger-rod attachments.

3. Concrete inserts, top-beam C-clamps, side beam or channel clamps or center beam clamps for building attachments. C-type clamps used to attach hangers to the building structure in areas subject to earthquakes shall be equipped with a retaining strap or safety hook to prevent movement. See Figure 7-7 of ASHRAE Practical Guide to Seismic Restraint, 1999. C-type clamps, with or without retaining straps, shall not be used to attach braces to the building structure.

4. Not Used.

E. Valves: All sprinkler valves shall be UL/FM approved. Provide valves shown on the Drawings, needed for a proper installation, and complying with the following:

1. Gate Valves: 300 psi WWP: 3/4" to 2", bronze body, OS&Y indicating type; double or wedge disc with threaded ends. 2½" and up: IBBM, OS&Y **or** indicating type; double or wedge disc with end connections as required to suit the piping system.

2. Butterfly Valves: ductile iron body; double seal or encapsulated ductile iron disc design for bubble tight shut off; stainless steal stems, gear operated; valve operation: integral indicating device.

3. Valve Locking Devices: chain: 3/16" galvanized steel, welded link; padlock; key tags: 1½" dia. Brass, stamped with valve number and service; "S" hooks: brass, for securing keys to key tags.

4. Check Valves: IBBM, single clapper swing check with metal to metal or rubber faced checks, suitable for horizontal and vertical installation; end connections as required to suit the piping system; 300 psi.

F. Not Used.

G. Special Valves

1. Provide valves, UL listed, in accordance with the following listing. Provide sizes and types that mate and match piping and equipment connections.

a. Alarm Check Valve: Provide alarm check valve, model # Victaulic Series 751 or TYCO Fire Products AV-1, with a water trim by-pass line and a retard chamber that allow for containment of pressure surges and avoidance of false alarms that are caused by intermittent pressure variations. Alarm check valve shall be of ductile construction body and capable of operating in 300 psi working water pressure.

1) The retard chamber shall be constructed of ductile iron body and be coated in the interior as well as in the exterior with a

corrosion resistant painting or material. Retard chamber shall be similar to Victaulic Series 752 or other approved equal.

2) Other accessories for alarm check valve include Alarm Pressure Switch and a Retard Vent Kit. The Alarm pressure switch actuates an alarm and sends a signal to the fire alarm panel. Approved model#: Victaulic, EPS10-1 or EPS10-2 or other approved equal.

3) Retard Vent Kit shall be similar to Victaulic Series 752 V or other approved equal.

b. Water Flow Detector: Provide a paddle or vane-type water flow detector in the sprinkler supply piping in the location indicated on the Drawings. Detector shall be so constructed and installed that any flow of water from the system equal to or greater than that from a single automatic sprinkler of the smallest orifice size installed on the system will result in an audible alarm on the premises within 5 minutes after such flow begins and until such flow stops. The delay mechanism shall be a sealed mechanical pneumatic unit with visual indication of actuation. The actuation mechanism shall include a corrosion paddle or vane inserted through a hole in the pipe and connected by a mechanical linkage to the delay mechanism. Unless noted, enclosures shall be NEMA 4 listed by UL. Listed paddle or vane-type water flow detector does not require approval number from NYC Office of Technical Certification and Research (OTCR).

Manufacturer and Model Number: System Sensor WFD Series

c. Pressure Reducing Valves: Provide listed pressure- reducing valves that are intended to keep the maximum outlet pressure to 165 psi at any point in the system. Valves shall be rated for maximum inlet pressure of 250 psi and be suitable for field outlet" set pressure" ranging from 80 to 150 psi. Valves shall be similar to PRV-1 as manufactured by TYCO.

1) Pressure gauges shall be provided on the inlet and outlet sides of each pressure-reducing valve.

2) A relief valve shall be installed on the discharge side of the pressure-reducing valve

2. Electrical Subcontractor shall provide the sprinkler electric alarm equipment including the control panel, bells, signs, wiring, etc. All equipment for the Sprinkler Alarm system which is not specifically called for to be provided by any other contractors and/or subcontractors shall be provided by the Master Fire Suppression Piping Contractor.

3. Approved Manufacturers:

Anvil International/Anvil Star

Firematic Sprinkler Devices

Reliable Automatic Sprinkler Co.

Victaulic Co. of America.

Tyco Fire Suppression & Building Products

Potter Electric Signal Company

Globe Fire Sprinkler Corporation

Shurjoint Piping Products

H. Gauges: Provide gauges shown on the Drawings and complying with the following:

1. Provide pressure gauges of materials, capacities and ranges, designed and constructed for use in service as required:

a. Type: General use, 1% accuracy, ANSI B40.1

b. Case: drawn steel or brass, cast aluminum, shatterproof glass lens, 4½" diameter.

c. Connector: brass with 1/4" male NPT.

d. Scale: white coated aluminum, with permanently etched markings.

e. Range: conform to the following:

1) Vacuum: 30" Hg - 15 psi

2) Water: 0 – 300 psi

2. Acceptable Manufacturers:

Ametek/US Gauge

Ernst Flow Industries

Marsh Bellofram

Miljoco Corporatjuion

Trerice (H.O) Co.

Weiss Instruments, Inc.

Wesler Instruments

I. Pressure Gauge Cocks:

1. Provide pressure gauge cocks between pressure gauges and gauge tees on piping systems. Construct gauge cock of brass with 1/4" female NPT on each end, and "T" handle brass plug.

a. Syphon: 1/4" straight coil constructed of brass tubing or loop-shaped section of brass, stainless-steel or steel pipe with 1/4" male NPT on each end.

b. Snubber: 1/4" brass bushing with corrosion resistant porous metal disc, through which pressure fluid is filtered. Select disc material for fluid served or pressure rating.

2. Manufacturers: same as for pressure gauges

J. Pressure and/or Temperature Gauge Connector Plugs:

1. Provide gauge connector plugs rated for 500 psi at 200°F. Construct of brass and finish in nickel–plate equipped with 1/4” or 1/2” NPS fitting, with self-sealing valve core type neoprene gasketed orifice suitable inserting 1/8” OD probe assembly from dial type insertion pressure and/or temperature gauge. Equip orifice with gasketed screw cap and chain.

2. Approved manufacturers:

Miljoco Corporation

MG Piping Products Co.

Peterson Equipment Co.

Sisco, A Spedco, Inc. Co.

Trerice (H.O) Co.

Watts Regulator Co.

K. Sprinkler Head

1. Provide sprinkler head of type indicated on Drawings, and in accordance with the following listing. Provide fusible links for 165°F or heat responsive, frangible glass bulb design rated at 155°F unless otherwise indicated on the Drawings. Wet or dry sprinklers that utilize O-rings as seals are not to be used on projects. O-ring sprinklers can degrade over time. These sprinkler heads can corrode, or minerals, salts, and other contaminants in water can affect the polymeric rubber O-ring seals. These factors could cause the sprinkler heads to not activate in a fire. Heads that use Teflon coated Belleville metallic seals rather than a rubber O-ring are to be used.

Concealed Including Cover Plate

a. Not Used.

b. Sprinkler Cabinet and Wrench: Provide steel, baked red enameled, sprinkler box with capacity to store sprinkler heads and wrench.

c. In light hazard occupancy only, quick-response extended coverage (QREC) sprinklers shall be installed in accordance with their listing. To reduce branch piping as well as the number of heads that are provided, quick-response extended coverage sprinklers shall be installed where indicated in drawings. Typically, gymnasium or other similar fire hazard classifications are ideal for maximizing the protection area by using sidewall horizontal quick-response extended coverage sprinklers.

2. Approved Manufacturers:

Firematic Sprinkler Devices, Inc.

Anvil International/Anvil Star

Viking Corp.

Reliable Automatic Sprinkler Co.

Victaulic Co. of America.

Tyco Fire Suppression & Building Products

Globe Fire Sprinkler Corporation

L. Fire Department Connections

1. Flush type shall be of the size indicated on drawings. Fire Department connections shall be polished brass with two individual drop clapper valves and cast iron plugs painted yellow with brass chain and with polished plate lettered “AUTOMATIC SPRINKLER" and "PART SPRINKLERED”. The letter inscription shall be either an integral part of the plate or on a separate nameplate securely fastened to or above the Fire Department connection. Flush type shall be Potter Roemer Fig. 5020G Series (THREADS: N.Y.F.D.), or Croker Corp. Fig. 6030 Series (3” NYCFD inlets). Threads shall be to NYC Fire Department specifications.

2. Exposed type shall be of the size indicated on the drawings. Fire Department connections shall be polished brass with two individual drop clapper valves, pin lug swivels, plugs and chains and with polished brass wall plate lettered “AUTOMATIC SPRINKLER" and "PART SPRINKLERED”. The letter inscription shall be either an integral part of the plate or on a separate nameplate securely fastened to or above the Fire Department connection. Expose type shall be Potter- Roemer, Fig. 5750 Series (THREADS: N.Y.F.D.) or Croker Corp. Fig 6430 Series (3” NYCFD inlets). Threads shall be to NYC Fire Department specifications.

3. Sidewalk type shall be of the size indicated on drawings. It shall be polished brass, complete with 18” sleeve, cast brass plugs and chains, and floor plate lettered “AUTOMATIC SPRINKLER" and "PART SPRINKLERED”. The letter inscription shall be either an integral part of the plate or on a separate nameplate securely fastened to or above the Fire Department connection Sidewalk type shall be Potter Roemer 5760 Series (THREADS: N.Y.F.D.) or Croker Corp. Fig. 6513 (3” NYCFD inlets). Sidewalk Fire Department connection risers shall be made of red brass.

   a. Where a fence encloses a portion of the building containing a Fire Department connection, Contractor shall provide and secure to the fence directly opposite the Fire Department connection a steel sign containing the following wording: "F.D. Fire Department Connection located...Feet behind Sign." Sign shall be finished in porcelain enamel with one inch red letters on white background.

4. Acceptable Manufacturers:

   Elkhart Brass Mfg. Co., Inc.

   Croker

   Potter Roemer

M. Ladders: Provide permanent heavy steel ladders to provide access to valves in accordance with the code requirements. Ladders shall be of width and height required, shall be made of heavy steel bars and heavy rungs and shall be permanently fastened at location. Where the shut-off valve adjacent to the sprinkler alarm valve is located higher than 7' above the floor, ladder shall be provided where directed.

N. Pipe Escutcheons

1. Pipe escutcheons shall have inside diameter closely fitting pipe outside diameter or outside of pipe insulation where pipe is insulated. Select outside diameter of escutcheon to completely cover pipe penetration hole in floors, walls, or ceilings; and pipe sleeve extension, if any. Escutcheons shall be cast or sheet brass, solid or split-hinged, with brass set screw. Provide chrome finish for occupied areas exposed to view.

2. Manufacturers:

Zurn Industries, Inc.

McGuire Mfg. Co.

O. Pipe Sleeves: Provide pipe sleeves of one of the following. Pipe sleeve must be appropriate type and thickness for the UL firestopping assembly selected:

1. Sheet-Metal: Fabricate from galvanized sheet metal; round tube closed with snaplock joint, welded spiral seams, or welded longitudinal joint. Fabricate from the following gauges: 3" and smaller, 20 gage minimum; 4" to 6", 16 gage; over 6", 14 gage minimum.

2. Steel-Pipe: Fabricate from Schedule 40 galvanized steel pipe; remove burrs.

3. Iron-Pipe: Fabricate from cast-iron or ductile-iron pipe; remove burrs.

4. Firestop penetration materials for sealing sleeves shall be listed by Underwriters Laboratories and if not listed have MEA or OTCR approval. The materials shall be as specified in Section 07270. For pipes passing through fire-rated floor, cast-in place firestop device with Underwriters Laboratories listing, and if not listed have MEA or OTCR approval, is permitted as an acceptable sleeve alternative to a metallic sleeve with firestopping material. The cast-in place device is a one-step firestopping process that does not require additional firestop penetration materials for sealing the sleeves. The device shall be installed where required for sleeving purposes. The cast-in place firestop device shall not be used for wall applications.

5. Materials for sealing space between each pipe and sleeve through non-rated interior walls shall consist of mineral wool and sealant.

2.02 PAINTING

A. Paints used on dedicated sprinkler piping shall not:

1. Exceed the VOC content limits established in the Green Seal Standard GS-11 Paints, first edition, May 20, 1993.

2. Exceed the VOC content limit of 250 g/L established in the Green Seal Standard GC-03, Anti-Corrosive paints, second edition, January 7, 1997.

B. Provide colors indicated in Paragraph 3.03.C

1. First (1st) coat – Alkyd Vinyl Acrylic – Latex Primer – 1.2 Mills DFT

2. Second (2nd) coat – Semi-Gloss Vinyl Acrylic Latex – Enamel – 1.3 Mills DFT

PART 3 - EXECUTION

3.01 INSTALLATION

A. Approval of Sprinkler System: All necessary permits for work in connection with the installation of the sprinkler system shall be obtained by the Contractor before commencing any of the sprinkler work. The Engineer will prepare and submit plans to the Building Department and obtain approval of the sprinkler system.

B. Installation of Identification

1. Install fire protection signs on sprinkler system in accordance with NYC Building Code, NFPA 13 requirements.

2. Each valve in the sprinkler system shall be tagged in accordance with the requirements of The New York City Building Code.

C. Piping Installation

1. Install pipes and pipe fittings in accordance with Article 2.01.C.

2. Comply with requirements of NFPA 13 for installation of sprinkler piping materials. Install piping products where indicated, in accordance with manufacturer's written instructions and in accordance with recognized industry practices to ensure that piping systems comply with requirements and serve intended purposes.

3. Coordinate with other work including plumbing piping, as necessary to interface components of sprinkler piping properly with other work.

4. Install drain piping at low points of piping systems and at the alarm valve, a valve drain connection that will be carried down to the floor to discharge into the nearest floor drain, unless otherwise shown on the Drawings. Low points of sprinkler piping that cannot be drained through the alarm valve drain or when there is no alarm valve shall also be provided with drains as may be shown on the Drawings or as required.

5. Install valved hose connections of sizes indicated, or 3/4" size if not otherwise indicated, on sprinkler at ends of branch lines and cross mains at locations where indicated on the Drawings.

6. Install Inspector's test connection where indicated, or at most remote point from riser.

7. All parts of the sprinkler system that may be exposed to frost shall be protected from freezing by any of the following methods:

a. The piping shall be frost-proofed with insulation having a thermal conductance of 0.1 Btu/hr per square foot of surface per degree F at a mean temperature of 70°F to 75°F (21°C to 24°C). Insulation shall be protected to prevent water infiltration, and when exposed to the weather the insulation shall be covered with a 45 pound (20kg) roofing felt jacket or equivalent.

b. Electric tracers may be used in conjunction with the insulation.

D. Installation of Valves

1. Install alarm valves and water flow detectors where indicated on the Drawings.

2. Valves shall have built-in tamper switches for use in applications where supervision of the open position of the valve may be desired. The tamper switch is operated by a cam connected to the valve stem. The Contractor should make certain that the valve disc when fully open does not interfere with the operation of other system components immediately adjacent to the valve.

3. Install the floor control valve assembly inside the specified recessed cabinet or an access panel

E. Installation of Sprinkler Pressure Gauges: Install gauges in accordance with Articles 2.01.F, G & H.

F. Installation of Electrical Devices: Provide wiring requirements for electrical wiring of control panel, bells, valves, tamper switch, alarm valves, and water flow detectors.

G. Installation of Sprinkler Head

1. Install sprinkler head at the proper position shown on the Drawings, or as required. Install concealed type sprinkler heads with factory painted white cover plate in areas with suspended ceilings. Install recessed type sprinkler head with manufacturer supply escutcheon.

2. Install sprinkler piping, heads, and all other items and accessories to clear electric lighting fixtures.

H. Installation of Pipe Escutcheons: Install pipe escutcheons on each pipe penetration through floors, walls, partitions, and ceilings. Secure escutcheon to pipe or insulation so escutcheon covers penetration hole, and is flush with adjoining surface.

3.02 ADJUSTING AND CLEANING

A. Cleaning and Inspecting: Clean and inspect fire protection systems in accordance with Article 3.05.

3.03 FIELD PAINTING

A. Paints and coatings used in the interior of building to mark piping for identification purposes shall not exceed the VOC content limits established in Section G01600.

B. Paint exposed sprinkler piping with a priming coat and two finish coats as specified in Section 09900: Painting. Protect sprinkler heads during painting with small paper bags. Painting of sprinkler piping, hangers, and all other items and accessories shall conform to the code requirements.

C. Painting of Dedicated Piping:

1. Dedicated sprinkler piping such as risers, cross-over mains and cross-over connections shall be painted red and the handles of valves fitted into the dedicated piping shall be painted green prior to the hydrostatic pressure test of the system. Painting shall be applied whether the pipe is ultimately concealed or remained exposed.

2. Not Used.

3.04 CERTIFICATE OF COMPLETION OF SYSTEM PAINTING

A. A licensed master plumber, licensed master fire suppression piping contractor, registered design professional, or an individual holding an appropriate certificate of fitness from the FDNY for the operation and/or maintenance of sprinkler shall certify on forms provided by the Building Code Compliance (BCC) unit that painting of system was complied with. The certificate of completion of painting is required for buildings where the special inspection provision of chapter 17 of the NYC Building Code did not apply.

The certificate of completion of painting shall be maintained on the premises and made available for inspection by the FDNY

3.05 FIELD QUALITY CONTROL/INTERDISCIPLINARY TESTS AND FUNCTIONAL PERFORMANCE TESTS

A. Cooperate with the Engineerand provide all required access to facilitate all testing and inspections required by the Engineer for quality control and Regulatory Compliance.

B. Sprinkler Piping Flushing

Prior to connecting sprinkler risers for flushing, flush water feed mains, lead-in connections and control portions of sprinkler piping. After fire sprinkler piping installation has been completed and before piping is placed in service, flush entire sprinkler system, as required to remove foreign substances, under pressure as specified in NFPA 13. Continue flushing until water is clear, and check to ensure that debris has not clogged sprinkler heads.

C. Test

1. Hydrostatic Testing: After flushing system, test fire sprinkler piping hydrostatically, for one (1) hour period, at not less than 200 psi or 50 psi in excess of the system working pressure, whichever is greater. Check system for leakage of joints. Measure hydrostatic pressure at low point of each system or zone being tested.

2. Repair or replace piping system as required to eliminate leakage and to demonstrate compliance with NFPA standards.

3. Test the entire sprinkler installation, including sprinkler alarm system, in accordance with the requirements of the Building Code and give at least 2 days advance notice in writing of tests and inspections to the Commissioner of Buildings and the Engineer. Tests shall be conducted in the presence of the Commissioner or Commissioner's authorized representative and the Engineer, Fire Department and any other public authority having jurisdiction. All tests shall be performed as part of this contract.

D. Interdisciplinary Pre-Start-Up and Start-Up Tests/Inspections:

The Contractor shall conduct interdisciplinary pre-start up and start up tests/inspections (ex. verifying correct seismic restraint installations, verifying correct installation of sprinkler flow detectors and alarm gong) as per the manufacturer’s start up procedures. Contractor shall submit signed start up affidavit signed by the factory authorized service representative/Contractor’s

seismic P.E. certification indicating that all of the manufacturer's pre-start up and start up procedures have been successfully completed.

E. Functional Performance Tests:

Contractor shall also submit signed functional performance testing affidavit signed by the factory authorized service representative indicating that all of the manufacturer's functional performance tests (flushing, hydrostatic tests and testing of the sprinkler alarm system activation) have been successfully completed.

3.06 SPECIAL INSPECTION

A. Installation of sprinkler systems, including all supports and attachments is subject to the Special Inspection requirements of Section BC 1704.23 of the 2014 NYC Building Code. The Engineer will engage a Special Inspector to perform the required inspections.

B. Cooperate with the Engineer and provide all required access to facilitate all testing and inspection related to the Special Inspection.

C. The special inspector shall verify that the material and test certification forms have been transmitted to the Fire Department and the Department of Buildings.

3.07 FLOW TEST

A. The sprinkler system shall be flow tested as follows:

1. The main drain valve shall be opened and remain open until the system pressure stabilizes
2. The static and residual pressures shall be recorded on the contractor's test certificate
3. Water flow detecting devices including the associated alarm circuits shall be flow tested through the inspector's test connection and shall result in an audible alarm on the premises within 5 minutes after such flow begins and until such flow stops.
4. All components of the sprinkler system and auxiliary must have been pressure tested as a composite system
5. Discharge tests of the sprinkler system shall be conducted using the fire department connections (Fire Department connections)
6. Pressure gauges shall be installed at critical points and readings shall be taken under various modes of auxiliary equipment operation.
7. Water flow alarm signals shall be responsive to discharge of water through the system test pipes (Fire Department connections) while auxiliary equipment is in each of the possible modes of operation
8. Where sprinkler booster pumps are part of the water supply, testing shall be conducted while the pumps are operating.

END OF SECTION

SECTION 28 46 00 – FIRE DETECTION AND ALARM SYSTEM WITH CENTRAL STATION CONNECTION

PART 1 – GENERAL

1.01 DESCRIPTION OF WORK

A. The Work shall include all labor, equipment, materials and necessary services to provide a complete addressable Manual, Automatic Smoke/Heat Detection and Sprinkler Alarm System with Central Station Connection (hereinafter denoted by the phrase “the system”). The system shall be addressable, with all initiating devices individually annunciated on the Fire Alarm Control Panel. Evacuation alarm tones shall be programmed to be TEMPORAL 3 in accordance with Appendix Q (NFPA 72-2010 with NYC modifications as adopted in RCNY 3616-04) of the 2014 NYC Building Code. The system shall have supervised wiring with all operations as herein described. The system shall consist of, but not be limited to, the following:

1. Fire alarm control panel(s).
2. Manual pull stations.
3. Area smoke detectors.
4. Carbon monoxide detectors.
5. Heat Detectors.
6. Sprinkler waterflow switches.
7. Visual Notification Appliances (Strobes).
8. Sprinkler valve tamper switches for sprinkler valve supervision.
9. Fused disconnect switch in the electrical room.
10. Battery Backup.
11. Digital Alarm Communicator Transmitter (DACT) for Central Station notification**.**

1.02 APPLICABLE LISTINGS, CODES AND STANDARDS

A. The 2014 New York City Building Code.

B. The 2014 New York City Mechanical Code.

C. The 2014 New York City Fire Code.

D. New York City Electrical Code – NFPA 70 as amended by New York City.

E. NFPA 72-2010 edition, as modified for use in NYC - See Appendix Q of the NYC Building Code.

F. NFPA 72-2010 edition - Chapter 10, as adopted without modifications by the NYC Fire Code, shall be used for all acceptance and re-acceptance testing and maintenance of fire alarm systems.

G. NFPA 13–2007 edition, as modified for use in NYC - See Appendix Q of the NYC Building Code.

H. The New York City Amendment to the 2008 NEC Code.

I. The New York City Department of Buildings - Office of Technical Certification and Research (OTCR) for other equipment not specifically described by the NYC Construction Codes.

J. UL 1971 and ADA Guidelines related to Strobe Synchronization.

K. UL 864 – 9th Edition requirements for fire alarm control equipment. Contractor shall submit proof in writing from the proposed Fire Alarm System manufacturer that submitted Fire Alarm Control Panel has been UL listed based on the UL 864 9th Editions. UL listing based on the 8th Edition or earlier Editions is not acceptable.

L. UL 2075-07 “Gas and Vapor detectors and sensors” for CO detectors.

M. UL listings or FM Approvals for all fire alarm equipment shall be for its intended use.

N. NYC Fire Department Certificate of Approval for the Fire Alarm Control Panel (FACP) based on UL 864 – 9th Edition.

1.03 RELATED WORK

A. The Contractor shall coordinate the work in this Section with all related trades. Work and/or equipment provided in other Sections and related to the fire alarm system shall include, but not be limited to:

□□ Sprinkler water flow and tamper switches shall be provided by the Mechanical trade. The switches shall be wired and connected to the Fire Alarm System by this Contractor.□

2. Boiler and non-electric hot water heater control circuits shall be furnished by the equipment’s control equipment for shut-down upon activation of **c**arbon **m**onoxide **and heat** detectors.

Interconnecting wiring to the boilers and gas fired hot water heaters from the Fire Alarm Control Panel shall be provided by this contractor.

1.04 SYSTEM DESCRIPTION

A. The system shall perform as described below. All equipment, components, and labor required shall be provided by the Contractor.

B. Fire Alarm Initiation

1. Fire alarm initiation shall be accomplished by:

a. Operation of a manual pull station.

b. Operation of a water flow switch in the Sprinkler System.

c. Operation of an Area Smoke Detector.

d. Operation of a Heat Detector.

e. Operation of a kitchen Fire Extinguishing System (Ansul System).

C. Alarm Indications

1. Operation of a manual pull station:

a. New Fire Alarm System Operation of a pull station shall immediately alarm the building audibly via the sounding an evacuation signal of

continuous Temporal 3 tones over the horns and visibly with the flashing of strobe lights. The horns and strobes shall operate continuously until an acknowledge/silence button on the Fire Alarm Control Panel is pushed. In addition, manual pull station operation shall be communicated as a “manual alarm” to the central station through the DACT.

2. Activation of a waterflow switch in the sprinkler system:

   a. New Fire Alarm System Activation of a waterflow switch in the sprinkler system shall immediately alarm the building audibly via the sounding an evacuation signal of continuous Temporal 3 tones over the horns and visibly with the flashing of strobe lights. The horns and strobes shall operate continuously until an acknowledge/silence button on the Fire Alarm Control Panel is pushed. In addition, waterflow switch operation shall be communicated as a “sprinker alarm” to the central station through the DACT.

3. Activation of the Kitchen Fire Suppression System (Ansul System), smoke detector, heat detector or flame detector:

   a**.** New Fire Alarm System Activation of the Kitchen Fire Suppression System (Ansul System), smoke detector, heat detector or flame detector shall immediately alarm the building audibly via the sounding an evacuation signal of continuous Temporal 3 tones over the horns and visibly with the flashing of strobe lights. The horns and strobes shall operate continuously until an acknowledge/silence button on the Fire Alarm Control Panel is pushed. In addition, operation of the Kitchen Fire Suppression System (Ansul System), smoke detector, heat detector or flame detector shall be communicated as an “automatic alarm” to the central station through the DACT.

4. Activation of a carbon monoxide detector:

   New Fire Alarm System Activated Carbon Monoxide Detector shall sound the integral horn (integral to the CO detector) in a Temporal 4 tone. No evacuation signal shall be sounded upon activation of a carbon monoxide detector. Activation of the carbon monoxide detectors shall send an alarm to the panel and be communicated as a “CO Alarm” to the central station through the DACT.

5. Other devices connected to the Fire Alarm system:

   a. Sprinkler system tamper and flow switches and sprinkler tank water level and pressure switches shall be monitored by a central supervisory station as individual “Supervisory Signals” (per device type).

      Trouble signals from the Fire Alarm Control Panel shall be monitored by a central supervisory station as a “General Trouble”.

D. Other Fire Alarm System Operations

1. Boiler and hot water heater shut-down:

Activation of a carbon monoxide detector or heat detector shall shut down boilers and non-electric hot water heaters.

E. Display Module Operation/Indications

1. An alarm may be acknowledged by actuating the "ALARM/TROUBLE ACKNOWLEDGE" key/button. This shall silence the audible device in the Fire Alarm Control Panel and change the "SYSTEM ALARM" LED from flashing to steadily lit.

2. If multiple alarm conditions are present, the first alarm must be shown on the LCD display. The LCD display can then be scrolled to show all other alarm conditions.

3. Failure of normal power, open or short circuits, disarrangement in system wiring, failure of microprocessor, failure of any addressable module or any ground fault condition shall activate the system trouble circuitry. Amber "SYSTEM TROUBLE" LED shall illuminate when any of these conditions exist. Along with the trouble LED, a steady trouble audible signal shall be sounded and an alphanumeric trouble error message shall be displayed on the LCD display.

4. All trouble conditions and error messages shall be indicated on the system printer, including the time and date of each occurrence.

5. A trouble signal may be acknowledged by actuating the "ALARM/TROUBLE ACKNOWLEDGE" key/button. This shall silence the trouble audible signal and change the display from flashing to steady. If multiple trouble conditions are present, the LED shall stay lit and the audible signal will sound until all troubles are acknowledged.

6. During an "alarm" condition, all "trouble" signals shall be suppressed with the exception of illumination of the "SYSTEM TROUBLE" LED.

1.05 QUALITY ASSURANCE

A. Equipment/System

1. All equipment furnished under these Specifications shall be UL Listed or FM Approved for its intended purpose.

2. All Fire Alarm Control Panels shall be UL listed in accordance with UL 864 – 9th Edition and listed in the UL Fire Protection Equipment Directory under product category “Control Units System (UOJZ)”. Use of equipment listed under UL 864 - 8th Edition or earlier is not permitted.

3. NYC Fire Department Certificate of Approval for the Fire Alarm Panel and Data Gathering Panels, based on UL 864 – 9th Edition.

B. Manufacturer

□□ The manufacturer providing material or equipment specified in this section must, for the past five (5) years, have been regularly engaged in the manufacture of material or equipment similar in type to that required for this Project. Such material or equipment provided by the manufacturer must have been in satisfactory service for not less than five (5) years.□

C. Fire Alarm Company

1. The Fire Alarm Company providing the material and supervision shall be a manufacturer - authorized distributor for the equipment to be provided.

2. If brand names other than those listed are proposed for use, the Fire Alarm Company shall pay all costs, including travel expenses to the test facility for the Engineerto witness the tests demonstration.

3. The Fire Alarm Company shall be a manufacturer - trained and authorized repair and service organization capable of providing on-site supervision throughout the project and warranty/maintenance service after acceptance.

4. The Fire Alarm Company shall provide all technical support required for an operational system. All technicians shall provide all of the following qualifications in writing:

   * NICET Level 2 in Fire Alarm Systems,

   * Factory Certificate for the proposed equipment,

   * Fire Department Certificate of Fitness for smoke detector testing and maintenance, in accordance with Section FC 901.6.3.4 of the NYC Fire Code.

D. Company Field Advisor

The Fire Alarm Company shall provide a Company Field Advisor to provide all technical supervision and installation support. That individual shall provide all of the following qualifications in writing: NICET Level 3 in Fire Alarm Systems, Factory Certificate for the proposed equipment and a Fire Department Certificate of Fitness in accordance with Section FC 901.6.3.4. Company Field Advisor shall be available for a minimum of 16 working hours for the following:

1. Render advice regarding the installation and final adjustment of the system.

2. Render advice on the suitability of each signal-initiating device for its particular application.

3. Witness final system tests and then certify with an affidavit that the system is installed in accordance with the Contract Documents and applicable codes, and is operating properly.

4. Instruct facility personnel in operation, programming, and routine maintenance of the system (minimum of 4 hours).

5. Explain available service programs to facility supervisory personnel for their consideration.

1.06 SUPPLEMENTAL SUBMITTALS

A. Fire Alarm Contractor shall submit the following material for review by the Engineer.

1. Provide a list (bill of materials) of all equipment and components to be used in the system.

2. Provide description of operation of the system, to include any and all exceptions, variances or substitutions. Include a copy of printer headings, reports, prompts, etc.

3. Provide system Ampere load (during both normal and alarm conditions) and time calculations to substantiate compliance (battery Ampere-Hour capacity) with battery back-up power requirements for a 24-hour standby followed by a 15-minute full alarm load, as required in NYC. Standard battery calculations based on NFPA 72 are not permitted, as NYC requirements exceed those of NFPA 72.

4. Provide manufacturer's printed product data, catalog pages and descriptions of any special installation procedures.

5. Provide Data from the Manufacturer proving that:

   a. Fire alarm initiating devices that receive their power from the initiating circuit of a Fire Alarm Control Panel are multiple listed by the UL or FM for use with the control unit.

   b. UL listings or FM approvals of all products and components.

   c. NYC Fire Department Certificate of Approval for the Fire Alarm Control Panels and Data Gathering Panels (DGPs).

   d. The batteries proposed for use are compatible with the battery charger.

6. Provide Shop Drawings as follows:

   a. Large scale drawing, including actual dimensions, of the fire alarm control panel(s) (FACP), and all ancillary equipment.

   b. Riser diagram showing all equipment and types, all connections and number and size of all conductors.

   c. Floor plans showing all equipment and types, all connections and number and size of all conductors.

7. Provide a schedule, for review and approval, of the proposed label for each auxiliary control switch at the fire alarm control panel.

8. Provide a schedule, for review and approval, of the proposed label and color for each LED/lamp indicator at the remote annunciator.

9. Close-out submittals as listed in Part 3 of this specification.

10. Warranty

1.07 MAINTENANCE

A. Service Availability of the Fire Alarm Company

It shall be a fully equipped service organization, capable of an 8 hour response

time to service calls and must be available 24 hours a day, 7 days a week to service the complete Fire Alarm System.

1.08 WARRANTY

A. Special Warranty: Written warranty, executed by manufacturer agreeing to repair or replace materials or workmanship for a period of one (1) year from the date of Substantial Completion (successful 100% acceptance testing by a Company Field Advisor).

PART 2 - PRODUCTS

2.01 MANUFACTURERS

A. The following manufacturers are approved for the furnishing of the specified items of Fire Detection and Signaling Equipment: FCI, Honeywell/Notifier, EST (UTCFS), Siemens, Wheelock and System Sensor, Firecom and Mircom.

B. Each item of equipment offered by these manufacturers must meet the full requirements of the Specification for that item, and shall be UL listed in accordance with UL 864 – 9th Edition and listed in the UL Fire Protection Equipment Directory under product category “Control Units System (UOJZ)”. Use of equipment listed under UL 864 - 8th Edition or earlier is not permitted.

2.02 APPROVALS

A. The fire alarm system, as installed, shall be approved by the Bureau of Fire Prevention of the New York City Fire Department. A Fire Department Letter of Approval shall be obtained by the contractor and delivered to the Engineeras a prerequisite for final acceptance. Refer to Article 3.02.

2.03 EQUIPMENT

A. General

1. The following equipment where shown on the Drawings or called for in the Specifications shall be furnished and installed by the Contractor at locations where shown on the Drawings, called for in the Specifications or as otherwise directed in writing by the Engineer.

B. Manual Pull Station

1. Provide an addressable manual pull station at each location indicated on the Drawings or called for in the Specifications.

2. Each pull station shall be addressable manual pull lever single-action type. When operated, the handle shall be locked in the operated position until the station is reset (by use of either a key or a reset tool, depending on model).

3. Each pull station shall have hinged inner and outer doors with the inner door locked. A common key shall be required to gain access for resetting the station. Instructions for operating station shall appear on front of the outer door.

4. The pull station shall be interfaced into the addressable system by means of an internal or external addressable interface module.

5. For surface or semi-flush mounting, the mechanism shall be set into a separate stamped steel box with one 3/4” knockout. All parts shall have a

baked enamel red finish and exposed edges shall be rounded. Steel box shall be EST (UTCFS) model #27193-11 or RSG/Aames Security model #RMS-DBB-1K. Pull stations with internal module shall be UL listed for use with the FACP.

6. Pull stations shall be set so that the top of the operating lever of station shall be 3’-6” to 4’-0” above the finished floor. The Contractor shall report to the Engineer any interference with wainscot, or other construction or mechanical equipment.

7. False Fire Alarm Stopper Cover: provide false fire alarm stopper cover to fit every pull station shown on the drawings. False fire alarm stopper shall be Safety Technology International Stopper II P/N – STI 1100 with 9 volts dc battery.

C. Audible Notification Appliances (Horns)

1. The Contractor shall provide fire alarm horns wherever the Drawings require.

2. Each horn shall be installed on a standard 4" galvanized electrical box, either flush or surface mounted, as indicated on Drawings. Provide weatherproof box and gasket in damp, wet or exterior locations.

3. Horns shall be electrically polarized and include a blocking network to allow for connection to a supervised fire alarm signal circuit.

4. Each horn shall have a high volume setting between 82 and 91 dBA at 10'-0”. Each horn shall have adjustable Hi-Lo dBA setting.

5. Horns shall be 24 VDC and shall have a selectable Temporal 3 setting to allow one pair of wires to power both horn and strobe.

6. All horns shall be by single supplier. Horns shall be EST (UTCFS) Genesis Series GIRF-HD, Siemens, Honeywell Gamewell/FCI or approved equal.

D. Visual Notification Appliances (Strobes)

1. The rating of the strobe unit shall be a minimum of 15 candelas and shall deliver all characteristics and requirements called for in NFPA 72-10 as accepted by Appendix Q of the NYC Building Code and the American with Disabilities Act (ADA), including the “Equivalent Facilitation” rule, and UL 1971.

2. In corridors, places of assembly and common areas, the strobes shall be synchronized when 3 or more strobes are in line of sight. Strobes to be synchronized shall be UL listed for use with the FACP/power source to ensure synchronization.

3. Strobes shall be listed for wall-mounted application.

4. Strobes shall be listed for 24 volt DC.

5. Fixture assembly shall be mounted on a painted steel plate. A translucent dome of hi-impact plastic, with the work "Fire" silk-screened red in 1/2" high letters, shall be provided to provide readability from both sides of the unit. The dome shall be screw-fastened or epoxied to plate so as to prevent dome from being removed.

6. Strobes and their wiring shall be 100% supervised by the Fire Alarm Control Panel.

7. In new construction, the indicator shall be mounted to a flush 2-gang outlet box with suitably placed threaded holes to accept mounting of the indicator plate. In existing construction, surface mounted boxes shall be a finished cast type box with no knockouts, Type FS or FD.

8. Strobes installed in damp, wet or exterior locations shall be provided with a weatherproof box and gasket listed for such application.

9. Strobes shall be EST (UTCFS) Genesis Series GIRF-VM, Wheelock #RSS-241575W-FR, System Sensor SR or approved equal.

E. Audible/Visual Notification Appliances (Horns/ Strobes)

1. Where indicated on Drawings horns shall come equipped with a strobe unit that mounts directly to basic horn mechanism.

2. The strobe section and horn section shall be separate and can be connected to either separate signal circuit loops or to the same signal circuit loop.

3. Horn and strobe components of a horn/strobe unit shall meet all criteria listed above.

4. Horns/strobe units shall be EST (UTCFS) Genesis Series GIRF-HDVM, Wheelock HS4-241575W-FR, System Sensor Horn/Strobe P2R or P4R, or approved equal. Strobes to be synchronized shall be UL listed for use with the FACP/power source to ensure synchronization.

F. Area Type Smoke Detectors

1. The Contractor shall provide intelligent analog addressable photoelectric smoke detectors with bases at locations shown on the Drawings or called for in the Specifications. Ionization type smoke detectors are not permitted.

2. Smoke detectors shall operate on 24V D.C. received from the Fire Alarm Control Panel. Smoke detectors shall be analog type supervised by the panel for sensitivity rating within acceptable thresholds. Deviations shall be annunciated at the Fire Alarm Control Panel & Remote Annunciator(s).

3. All smoke detectors shall be supplied with an LED indicator lamp, which shall give indication that the smoke detector is active (flash) and latch (on steady) when the detector has tripped into alarm.

4. Area type photoelectric smoke detector shall be EST (UTCFS) SIGA2-PS, Honeywell/Notifier FSP-851, Siemens, or approved equal. Detectors shall be UL listed for use with the FACP.

G. Heat Detectors

1. Contractor shall provide heat detectors in boiler room and in other locations as shown on plans.

2. Heat detectors shall be EST (UTCFS) model 284BPL 194°F fixed temperature and shall be monitored with an EST (UTCFS) monitor module SIGA-CT1, Honeywell/Notifier FST-851, Siemens, Honeywell Gamewell/FCI or approved equal. Detectors shall be UL listed for use with

the FACP.

H. Guards

1. Guards shall be 9-gauge minimum wire that will provide protection without interfering with the operation and maintenance of the unit. The guard shall have a heavy duty corrosion-resistant polyester coating to protect against rust and corrosion. Guards for audible and visual notification devices shall be UL listed.

2. Horns, strobes, and combination horn/strobe units in gymnasiums, playrooms, corridors, locker rooms and toilets shall be equipped with guards.

I. Carbon Monoxide Detectors.

1. The Contractor shall provide carbon monoxide detectors where shown on the drawings.

2. Carbon monoxide detectors shall be designed to detect the presence of carbon monoxide.

3. Carbon Monoxide detectors shall installed and operational be in accordance with NYC Building Code Section BC 908.7.2.

4. Carbon monoxide detectors shall be listed in accordance with UL 2075-04 (revised 7/20/05) and have, at a minimum the response times as follows:

   At 70 +/- 5 ppm, unit must alarm within 60-240 minutes.

   At 150 +/- 5 ppm, unit must alarm within 10-50 minutes.

   At 400 +/- 10 ppm, unit must alarm within 4-15 minutes.

5. Carbon Monoxide detectors shall operate on 24 VDC received from the Fire Alarm Control Panel, and have an integral trouble relay that will send trouble / supervisory signals to the control panel for conditions including sensor failure, sensor missing, or end-of-life signal. They shall be capable of being system-monitored.

6. Carbon monoxide detector shall have an operating temperature of 32°F (or less) to 104°F (or more).

7. Carbon monoxide detector must be wired for supervised operation, and shall send a trouble condition to the panel when sensor supervision is in a trouble condition.

8. Carbon Monoxide detectors shall be EST (UTCFS) 260-CO or SIGA2-COS Addressable CO with AB4GT sounder base, System Sensor model CO1224T, Notifier model CO1224T or approved equal.

9. Use of Carbon Monoxide Alarms (Stand-alone) is not permitted.

J. Alarm Interface Modules

1. Alarm interface Modules shall interface normally open contacts of sprinkler water flow switches, tamper switches and other supervisory devices to the addressable Fire Alarm System.

2. Each Interface Module shall provide selector switches to set an individual address to identify the module to the fire alarm control panel. These

switches shall be field adjustable. Interface Modules that require an external programmer or PROM burner shall not be acceptable.

3. Alarm Interface module shall be EST (UTCFS) model SIGA-CT1 (single input) or SIGA-CT2 (double input), Honeywell/Notifier FMM-1 or FMM-101 (Mini Version) or approved equal. Modules shall be UL listed for use with the FACP.

K. Document Storage Box

Provide a storage box large enough to store the fire alarm documents for ready use by the Fire Department similar to FDB Box by Space Age Electronics, Notifier, Grainer or approved equal. Box to be red and use FDNY access keys.

2.04 CONTROL PANELS

A. Fire Alarm Control Panel

1. Fire Alarm Control Panel shall be EST (UTCFS) (model EST3X for less than 750 points or EST3 for more than 750 points), or Honeywell/Notifier (NFC-640 for less than 636 points, NFS-3030 for more then 636 points), FCI E3 series, , Firecom 2000 or Mircom FX-2000 and Siemens XLS.

2. The Fire Alarm Control Panel and associated Data Gathering Panels (DGPs) must be listed in accordance with UL 864 9th Edition. Contractor must provide proof of such listing.

3. The Fire Alarm Control Panel and associated Data Gathering Panels (DGPs) must have a NYC Fire Department Certificate of Approval based on UL 864 – 9th Edition. Contractor must provide proof of such listing. UL listing based on the 8th Edition or earlier Editions is not acceptable.

B. System Power Supply

1. The system power supply shall operate on 120 VAC main power. This power shall be transformer converted to low voltage providing rectified and filtered 24 VDC for system operation. This 24 VDC shall be rated @ 4 Amps and shall comply with U.L. Standard 864 9th Edition for power limited operation.

2. The power supply shall provide power for all system and auxiliary control functions, including the charging of the back-up batteries.

3. The charger output shall be supervised and fused.

4. The battery charger shall be capable of charging nickel-cadmium (Ni-Cad) or lead acid batteries.

5. The batteries shall be sized to provide 24 hours of standby operation in the supervision mode, with 15 minutes of full general evacuation operation of all notification appliances at the end of the 24 hour standby.

6. System power supply shall be Notifier PS12250, Siemens, Honeywell Gamewell/FCI or approved equal.

C. Microprocessor Module

1. The microprocessor module shall contain the microprocessor, memory, system operating software, configuration memory and the circuits necessary to support the fire control system.

2. The microprocessor module shall function as the system's information and control center, processing all messages from the field devices (supervisory, trouble, alarm).

3. Microprocessor Functions:

   a. The microprocessor shall execute all supervisory programming to detect and report the failure or disconnection of any module or peripheral device. An isolated circuit shall be incorporated, which will monitor the microprocessor, if a failure were to occur, this circuitry would provide audible and visual indication of this abnormal condition.

   b. The microprocessor shall access the system program for all control-by-event (CBE) functions. No system memory shall be lost due to failure of the primary and secondary power. Volatile memory shall not be acceptable.

   c. All job specific system programming, as to device monitoring and control functions, shall be field programmable.

4. Real-Time Clock:

   a. The microprocessor module shall have a real-time clock capable of monitoring all real-time programming and all time control functions.

D. Display & Switch Module

1. These modules shall provide display, annunciation and control for the complete Fire Alarm Control System.

2. An alphanumeric, true English, display shall be an integral part of the module. This display shall be back - lighted for ease of reading in the dark or bright ambient light conditions.

3. The Module shall provide a keypad permitting selection of system functions. Also incorporated with the keypad shall be three (3) control keys: ALARM/TROUBLE ACKNOWLEDGE, RESET and ALARM SILENCE.

E. Notification Appliance Circuits

1. Provide a Notification Appliance Circuit Module in the Fire Alarm Control Panel to supervise the audible and visual notification appliance circuit wiring for open conditions, grounds and shorts.

2. Field - located modules shall be housed in Transponders or other approved enclosures.

3. The use of Control Modules for signal circuits will not be accepted.

F. Coder Module

1. The coder module, if provided, shall be solid state located at the Fire Alarm Control Panel. The coder shall be 100% field programmable for a “Temporal 3" code, as described elsewhere in the specifications.

G. Addressable Loop Module

1. An addressable loop module shall be provided for communications with all addressable devices (initiation/control) connected to the system.

2. Each addressable loop module shall contain one loop, capable of communicating with a minimum of 160 addressable devices. Each system shall be capable of monitoring multiple loop modules. Provide a minimum of 25% spare capacity on each loop.

3. Communication loops shall be capable of being wired either Class "A" (Style 6), a ground fault on either conductor or a break shall not prevent a device from operating on either side of the break or Class "B" (Style 4), a break or ground fault in any conductor shall be reported as a trouble condition.

4. Each communication loop shall be electrically supervised for opens, shorts, and ground fault conditions.

5. The system shall be capable of a minimum capacity of 160 addressable smoke detectors**,** 160 addressable control modules and additional capacities for full point annunciation without decreasing the aforementioned capacities.

H. Digital Alarm Communicator System (DACT).

1. A Digital Alarm Communicator System shall be installed to send alarm, supervisory and trouble signals to a NYC Fire Department approved Central Station.

2. The DACT shall be integral to the fire alarm control panel (FACP) and shall be labeled to indicate the central station monitoring.

I. Presignal Event/Non-Event Mode Annunciator

The Presignal Event/Non-Event Mode annunciator shall consist of a remote annunciator LCD displaying all points of the system as well as a remote microphone and switches as needed for paging operation. It shall be an EST 3-6ANN annunciator with LCD Display and 3-RMICA microphone, Siemens, Honeywell Gamewell/FCI or approved equal.

2.05 FIRE ALARM FUSED DISCONNECT SWITCH.

A. The Contractor shall provide an individual fused disconnect switch with 3 poles, and a removable solid neutral bar in fuse gap for each fire alarm system indicated on the Engineering Drawings, in accordance with Art. 4000 (new NEC/NFPA 70 - 2008 Art. 760 as modified for use in NYC).

B. Rating of the fused disconnect switch shall be as required by the connected load. The fusible disconnect switch shall be heavy-duty type, UL listed for use as Service Entrance Equipment.

C. Each fused disconnect switch shall be painted RED and bear a white-core bakelite identification nameplate to identify its use by the phrase “FIRE ALARM SYSTEM DISCONNECT” and control equipment served.

D. Power connection to fused disconnect switch shall be provided per code.

E. Provide a padlock for the disconnect switch that is to be locked with the switch in the on position.

2.06 MARKERS, RISER DIAGRAM, AND OPERATING INSTRUCTIONS

A. Markers

Premarked self-adhesive; W.H. Brady Co.'s B940, Thomas and Betts Co.'s E-Z Code WSL self-laminating, Ideal Industries' Mylar/Cloth wire markers, or Markwick Corp.'s permanent wire markers.

B. Riser Diagram

Provide a readable riser diagram in a frame with glass cover. Riser shall be mounted where indicated by the Engineer and properly secured to the wall. All Fire Alarm devices shall be clearly indicated on riser diagram.

C. Operating Instructions

Provide a legible set of operating instructions in a frame with a glass cover. Mount in same vicinity as Riser diagram and properly secure to the wall.

2.07 WIRING

A. Power Conductors (Above 75 volts) shall be:

1. Copper, THHN, minimum 600 volts, 90°C and shall be installed in Rigid Galvanized Steel Conduit (RGC).
2. Cable type MI, U.L. listed for 2-hour fire resistance rating.
3. Minimum wire size shall be No. 12 AWG.

B. Low Voltage Conductors (75 volts and less) shall be:

1. Copper, THHN, minimum 600 volts, 90°C. Minimum wire size shall be No.14 AWG.
2. Multi-conductor cables shall meet the following requirements:
   a. Type FPLP (plenum type), minimum insulation thickness of 15 mils, minimum temperature 150°C.
   b. Type FPLP (plenum type) red colored jacket overall with minimum thickness of 25 mils.
   c. Cable printing as per UL 1424 and additionally shall be marked "ALSO CLASSIFIED NYC CERT. FIRE ALARM CABLE" legible without removing jacket.
   d. Minimum conductor size in a multi-conductor cable shall be No. 14 AWG.

PART 3 - EXECUTION

3.01 INSTALLATION

A. The entire system shall be installed in a workmanlike manner, in accordance with approved manufacturers' wiring diagram. The Contractor shall provide all conduit, wiring, outlet boxes, junction boxes, cabinets and similar devices necessary for the complete installation.

B. All penetrations of floor slabs and fire walls shall be fire stopped in accordance with the 2014 NYC Building Code and the NYC Electrical Code.

C. End of Line Devices (Resistors/Diodes/Capacitors) shall be provided as directed by the manufacturer and installed to provide proper circuit supervision, as required by the NYC Building Code Appendix Q (NFPA 72-10 with NYC modifications) and Art. 4000 (new NEC/NFPA 70 - 2008 Art. 760 as modified for use in NYC).

D. Installation of conductors and raceway shall be in accordance with the following.

1. Power conductors shall not be installed in common raceways with low voltage conductors. Power conductors other than M.I. cable shall be run in Rigid Galvanized Conduit (RGC).

2. For existing buildings, all low voltage conductors shall run in RGC, concealed or exposed. Low voltage THHN copper wires must be installed in RGC in accordance with Art. 4000 (NEC/NFPA 70 - 2008 Art. 760 as modified for use in NYC).

3. Low voltage **c**onductors shall be run in RGC raceway.

4. Telephone lines shall be installed in RGC from the DACT to the Telephone Demarcation point.

5. Conductors for other electrical systems shall not be installed in raceways containing fire alarm conductors. Power-limited wiring shall not be run in the same raceways with non-power limited wiring. Fire alarm conductors shall not be installed with other low voltage conductors.

6. Installation of raceways, boxes and cabinets shall comply with the following general requirements.

   a. Covers of boxes and cabinets shall be painted red and permanently identified as to their use.

   b. Penetrations of fire-rated walls, floors or ceilings shall be fire stopped.

   c. Raceways or cables shall not penetrate top of any equipment box or cabinet.

7. Splices and terminations of wires and cables shall be as follows:

   a. Permitted only in boxes or cabinets specifically approved for the purpose.

   b. Utilize mechanical connections specifically approved by UL 486 A & C for the conductors, or if soldered, first joined so as to be mechanically and electrically secure prior to soldering and insulating. Temperature rating of completed splices shall equal or exceed the temperature rating of the highest rated conductor.

8. All wiring shall be color coded throughout to New York City Electrical Code standards and shall be of the type recommended by the manufacturer.

E. Circuits from the fire alarm control panel to the system peripheral equipment shall be a minimum of as follows:

1. Each alarm initiating or supervisory circuit: Two (2) No. 14 AWG conductors.

2. Each alarm signaling/notification appliance circuit: Two (2) No. 14 AWG conductors.

3. Each control circuit: Two (2) No. 14 AWG conductors.

F. Identification, Labeling, Marking

1. Procedure Sign: Install adjacent to FACP and remote annunciator.
2. Zone Locator: Install adjacent to FACP and remote annunciator.
3. Power-Limited Circuits: Mark circuits at terminations, indicating that circuit is a power-limited fire protective signaling circuit.
4. Labeling Circuit Disconnects: Label the device used as the circuit disconnecting means for the dedicated branch circuits serving the system "FIRE ALARM SYSTEM POWER".
5. Identification of Circuits: Identify wires and cables in interconnection cabinets, and FACP with premarked, self-adhesive, wraparound type markers. Designations shall correspond with point to point wiring diagrams.
6. Battery Data: Insert a copy of the battery warranty in each battery compartment and mark on batteries the date placed in service.
7. Fire alarm system terminal and junction locations shall be identified in accordance with Art. 4000 (new NEC/NFPA 70 - 2008 Art. 760 as modified for use in NYC).
8. Terminal and junction boxes shall be painted red.
9. Coordinate with the Engineer and obtain a sticker indicating the account number and phone number of the monitoring company and place on the FACP.

G. The system shall be arranged to receive power from 120 volt, 60-cycle alternating current supply through a fused disconnect switch. All low voltage operation shall be provided from the fire alarm control panel(s).

H. All final connections shall be made under the supervision of a trained technical representative to be provided by the Fire Alarm Company.

I. Do not install smoke detector until the Work (including cleaning) of all trades in the area has been completed. Protect installed smoke detectors from airborne dust and debris with covers provided by the manufacturer for this purpose.

J. Guards

1. Attach guards directly to the surface with vandal resistant fasteners.
2. Where detectors are installed on suspended ceiling provide additional supports in the ceiling, such as channel support system, angel iron or additional runner bars. Fasten the additional supports rigidly to the ceiling runner bar system. Attach frame of resistant fasteners. Install metal spacers between the vandal guard frame and the supports so that the ceiling tiles will not be a part of the support system.
3. Use finishing collar between ceiling and vandal guard where vandal guard cannot be mounted tight against ceiling due to job conditions.

K. Grounding

1. All conduits supplying power to the fire alarm control panel and control

cabinets shall contain a green insulated grounding conductor sized in accordance with Art. 4000 (new NEC/NFPA 70 - 2008 Art. 760 as modified for use in NYC). Ground wiring shall be No. 10 AWG minimum from the fused disconnect switch to the service panel.

2. The Contractor shall connect the grounding conductor to the ground bus or other suitable grounding terminal in each panel and cabinet in which it enters. At the fused disconnect switch supplying the fire alarm system, the contractor shall provide a grounding electrode conductor sized and installed in accordance with the New York City Electrical Code, Table 250.66 (No. 8 AWG minimum). The grounding electrode conductor shall be connected to the service ground bus of the building. Ground connection at water pipe shall be by means of Thomas and Betts 3670 line, Appleton, Crouse-Hinds or other approved ground fitting.

L. Document Storage Box

Install box adjacent to the FACP at a location approved by the Engineer.

3.02 TESTS

A. Prior to the final acceptance test, the Contractor and a trained representative of the Fire Alarm Company shall test the completed system for proper operation in the presence of the Engineer. The entire system shall be demonstrated to perform all of the functions as below listed in these Specifications. Any system, equipment device or wiring failure discovered during said test shall be repaired or replaced before requesting scheduling of the final acceptance test. All repairs shall be retested in the presence of the Engineer prior to the final acceptance test.

B. The Contractor shall obtain and file Form A-433R, "Application for Electrical Inspection and Summary of Contract Equipment to be Installed" signed and sealed by a Master Electrician, “as-built” drawings in 11” x 17” format, prepared, signed and sealed by the Engineer-of-Record and Form B-45 “Request for Inspection” with the NYC Fire Department - Bureau of Fire Prevention. On the “as-built” drawing, the Contractor shall provide the operational statement certifying the installation and testing of the system in the wording required in FDNY Technology Management Bulletin #3-1/2010, which shall be signed and sealed by a master electrician or licensed fire alarm installer. The Contractor shall then submit the above-mentioned documents to the Fire Department and schedule their inspection. This shall be done in preparation for the final tests of the system.

1. To facilitate the inspection process, the Contractor shall notify the Engineer in sufficient time as to when the system is completed and ready for final inspection and the Contractor must make the “as-built” drawings so they may be filed and approved to allow the Fire Department inspection.

C. Upon completion of above, the Contractor shall perform final acceptance in the presence of the Engineer, the Inspector from the New York City Fire Department - Bureau of Fire Prevention, Contractor's representative and the Fire Alarm Company’s representative. Notify the Engineer at least 5 working days prior to the test so arrangements can be made to have a facility representative witness the test. The Contractor shall then accompany the Fire Department inspector during his/her inspection of the system, make all adjustments required by the inspector and re-file for additional inspections until a non-conditional approval is received from the Fire Department.

D. During the tests indicated above and during the final acceptance test**,** the following shall be conducted in accordance with NFPA 72-2010 – Chapter 10, as adopted by the 2014 NYC Fire Code.

1. Every manual fire alarm station shall be tested.
2. Every smoke detector, heat detector and carbon monoxide detector shall be tested using a UL approved method.
3. Every sprinkler system waterflow alarm switch shall be tested by flowing water.
4. Every sprinkler system valve tamper switch shall be tested by closing the sprinkler valve. On dry type sprinkler systems, the air pressure shall be measured.
5. Every audible notification appliance shall be sounded. Audibility of the notification appliances shall be verified throughout the entire premises for compliance with NFPA 72**-**10 as adopted by the NYC Building Code, Appendix Q per RCNY 3616-04, using the sound pressure meters set for A-scale.
6. Every visual notification appliance shall be activated. Visibility of the notification appliances shall be verified throughout the entire premises for compliance with NFPA 72-10 as adopted by the NYC Building Code, Appendix Q.
7. Every system control function shall be tested for its proper operation by activating each type of the initiating device that shall cause such function, including boiler and gas-fired hot water heater shutdown, and Central Station Transmitter operation.
8. All circuits shall be opened at two (2) locations to test for proper supervision.
9. Any and all other tests which the inspector from the NYC Fire Department - Bureau of Fire Prevention shall request.

E. If any of the tests shall fail to indicate proper operation or if the Fire Department inspector issues a list of defects for the system, the Contractor shall immediately correct all defects and improper functioning as part of his Contract obligation. The Contractor shall furnish and install all labor and materials that is necessary to accomplish this. The Contractor shall then reschedule the final acceptance test, file a new A-433R and B-45 form, and redo all tests until the system is accepted by the Fire Department without qualification.

F. Upon successful completion of all pre-testing, the Contractor and the Fire Alarm Company shall co-sign certificate attesting to the completion of testing and the updated and completed operational matrix, forward one (1) copy of said certificate to the Engineer and one (1) copy to the Fire Department as part of the inspection scheduling process. The Contractor is responsible for creating the as-built input-output matrix meeting the requirements of NFPA 72 to permit the filing.

G. All final acceptance testing shall be done at a time convenient to the Bureau of Fire Prevention official and the Engineer. All FDNY testing, re-testing and audit costs shall be paid by the Contractor as part of this Contract.

3.03 CLOSEOUT DOCUMENTATION AND INSTRUCTION

A. The following shall be submitted immediately after receiving the Letter of Approval by the Bureau of Fire Prevention of the New York City Fire Department.

1. Copies of the Fire Department Letter of Approval.

2. Copies of the updated form A-433R, "Application for Electrical Inspection and Summary of Contract Equipment to be Installed" filed with the Bureau of Fire Prevention, as well as all other forms required to be filed by the Contractor with the FDNY and Building Department.

3. As required by NFPA 72-10 as adopted by the NYC Building Code Appendix Q and NYC Fire Code, the Contractor shall provide three (3) Compact Disks (CDs) and four (4) hard copies of the System Data Base, including all system data files as programmed (as built) and all information to allow alternate authorized Fire Alarm Company to access, modify, alter, add to, or maintain the installed system. Manufacturers that do not comply with this provision of the specification shall not be considered “as equal”.

B. Contractor shall compile and provide to the Engineer manuals on the finished system to include: operating and maintenance instructions, manufacturer's catalog pages of all equipment and components, detailed as-built floor plans and riser diagrams showing all installed devices and point-to-point wiring diagrams (this is separate from the Engineer-of-Record “as-built” drawings), and a manufacturer's suggested spare parts list.

C. Contractor shall arrange with the manufacturer to provide Two (2) four-hour instruction sessions. Both four-hour instruction sessions shall be conducted during normal business hours to instruct personnel on the operation and maintenance of the entire system, including how to program the fan shut down, by-pass and start up operation. The first shall be conducted after final acceptance; the second shall take place after six (6) months as a reinstruction course. The Contractor may schedule this session in conjunction with the first semi-annual maintenance as required under this Contract.

D. Contractor shall provide Sensitivity Reports for all smoke detectors (Ionization and photoelectric types).

END OF SECTION

SECTION 22 05 00 – COMMON WORK RESULTS FOR PLUMBING

PART 1 - GENERAL

1.1 SUMMARY

A. This Section includes the following:

1. General Plumbing Requirements specifically applicable to all Division 22 Sections.
2. Some piping material and installation instructions common to most piping systems.
3. Grout.
4. Plumbing Demolition (when indicated on the drawings).
5. Equipment installation requirements common to equipment sections.
6. Concrete bases.
7. Supports and anchorages.

1.2 DEFINITIONS

A. Finished Spaces: Spaces other than mechanical and electrical equipment rooms, furred spaces, pipe and duct chases, unheated spaces immediately below roof, spaces above ceilings, unexcavated spaces, crawlspaces, and tunnels.

B. Exposed, Interior Installations: Exposed to view indoors. Examples include finished occupied spaces and mechanical equipment rooms.

C. Exposed, Exterior Installations: Exposed to view outdoors or subject to outdoor ambient temperatures and weather conditions. Examples include rooftop locations.

D. Concealed, Interior Installations: Concealed from view and protected from physical contact by building occupants. Examples include above ceilings and chases.

E. Concealed, Exterior Installations: Concealed from view and protected from weather conditions and physical contact by building occupants but subject to outdoor ambient temperatures. Examples include installations within unheated shelters.

F. The following are industry abbreviations for rubber materials:

1. EPDM: Ethylene-propylene-diene monomer rubber.
2. NBR: Acrylonitrile-butadiene rubber.

1.3 REFERENCES AND STANDARDS:

A. The editions recognized by the latest of the following are hereby included in and made a part of Division 22:

1. NFPA National Fire Protection Association
2. UL Underwriters' Laboratories, Inc.
3. NEMA National Electrical Manufacturer's Association
4. NEC National Electric Code
5. ASME American Society of Mechanical Engineers

6.	AWS	American Welding Society
7.	ANSI	American National Standards Institute
8.	AGA	American Gas Association
9.	HI	Hydronics Institute
10.	OSHA	Occupational Safety and Health Act
11.	AWWA	American Water Works Association
12.	CISPI	Cast Iron Soil Pipe Institute

1.4 QUALITY ASSURANCE AND COORDINATION

A. Electrical Characteristics for Equipment: Equipment of higher electrical characteristics may be furnished provided such proposed equipment is approved in writing and connecting electrical services, circuit breakers, and conduit sizes are appropriately modified. If minimum energy ratings or efficiencies are specified, equipment shall comply with requirements.

B. All work to meet in-force local plumbing code. In the case of discrepancies between the project contract documents and the in-force local code, the most stringent shall govern.

C. Comply with most current edition of New York City Building Code.

D. All materials and installations shall meet applicable FM Global requirements.

1.5 DELIVERY, STORAGE, AND HANDLING

A. Deliver pipes and tubes with factory-applied end caps. Maintain end caps through shipping, storage, and handling to prevent pipe end damage and to prevent entrance of dirt, debris, and moisture.

B. Store plastic pipes protected from direct sunlight. Support to prevent sagging and bending.

1.6 COORDINATION

A. Contractor shall coordinate the work of the different trades so that interference between piping, equipment, structural, and electrical work will be avoided. All necessary offsets in piping and ductwork, and all fittings, and other components, required to install the work properly shall be furnished complete in place at no additional cost.

B. Unless otherwise stipulated under a particular heading, the following rules relative to responsibilities of the entity performing the work will apply:

1. Make-up water piping connections shall be provided by the Plumbing Contractor to within five (5) feet of the required point of connection to the equipment and there terminated with a shut-off valve. Each trade shall make the final connection to the equipment it installs.

2. Ceiling access panels will be installed by the General Contractor at locations determined by the Plumbing Contractor.

3. The Plumbing Contractor shall install all roughing-in pertaining to his trade for each item of equipment furnished under another Section of the Specifications or by the City.

4. The Plumbing Contractor shall make final connections of equipment to rough-ins.

1.7 EQUIPMENT START-UP

A. Start-up of all plumbing equipment shall be video-recorded by the plumbing contractor. Two DVD copies shall be turned over to the City maintenance staff.

1.8 TESTING AND REPAIR

A. All piping and ductwork systems shall be thoroughly cleaned and flushed prior to final testing.

B. Pressure testing shall be completed for the following piping systems:

1. Domestic water, sanitary and vent, storm and gas piping systems, and other systems as noted on the plans.

C. All testing must be witnessed and accurately recorded noting methods of testing, times, dates, and results.

D. Any damage as a result of tests shall be repaired or damaged materials replaced at no cost to the City.

1.9 FINAL COMPLETION

A. All work shall be cleaned prior to issuance of Substantial Completion.

B. Retouch or repaint factory painted prime and finish coats where scratched or damaged.

C. Deliver any equipment as required by this Specification to City and obtained signed receipts of delivery.

D. Clean equipment, restore damaged materials, and leave the Work in acceptable condition.

E. Remove all site tools, equipment, surplus materials and rubbish continuously at no additional cost to the City.

F. Contractor shall submit written certificates warranting each item of equipment.

PART 2 - PRODUCTS

2.1 EQUIPMENT AND MATERIALS:

A. All equipment and materials shall be furnished in strict accordance with the equipment named and according to Specification requirements.

B. Equipment and materials specified shall be considered to have prior approval, but submittal for approval is required. Furnish construction drawings to other Contractors when required to coordinate construction.

C. Where multiple manufacturers are named the drawings and specifications are based on the requirements and layouts for the equipment of the first named manufacturer. Any change required by the use of other named manufacturers such as revisions to foundations, bases, piping, controls, wiring, openings, and appurtenances shall be made by the Contractor at no additional cost to the City.

2.2 PIPE, TUBE, AND FITTINGS - GENERAL

A. Refer to individual Division 22 Piping Sections for pipe, tube, and fitting materials and joining methods.

B. Pipe Threads: ASME B1.20.1 for factory-threaded pipe and pipe fittings.

2.3 GROUT

A. Description: ASTM C 1107, Grade B, non-shrink and nonmetallic, dry hydraulic-cement grout.

1. Characteristics: Post-hardening, volume-adjusting, non-staining, noncorrosive, nongaseous, and recommended for interior and exterior applications.
2. Design Mix: 5000-psi, 28-day compressive strength.
3. Packaging: Premixed and factory packaged.

PART 3 - EXECUTION

3.1 PIPING SYSTEMS - COMMON REQUIREMENTS

A. All materials and/or equipment shall be installed per manufacturer's recommendations and instructions.

B. When temporary water is required, an approved backflow device shall be used and testing reports from device shall be sent to the Engineer for verification.

C. Install piping according to the following requirements and Division 22 Sections specifying piping systems.

D. Drawing plans, schematics, and diagrams indicate general location and arrangement of piping systems. Indicated locations and arrangements were used to size pipe and calculate friction loss, expansion, pump sizing, and other design considerations. Install piping as indicated unless deviations to layout are approved on Coordination Drawings.

E. Install piping in concealed locations, unless otherwise indicated and except in equipment rooms and service areas.

F. Install piping indicated to be exposed and piping in equipment rooms and service areas at right angles or parallel to building walls. Diagonal runs are prohibited unless specifically indicated otherwise.

G. Piping shall not project beyond walls or steel lines nor shall it hang below slabs more than is absolutely necessary. Particular attention shall be paid to the required clearances.

H. Offset piping where required to avoid interference with other work, to provide greater headroom or clearance, or to conceal pipe more readily. Offsets shall be properly drained or trapped where necessary.

I. Provide swing joints and expansion bends wherever required to allow the piping to expand without undue stress to connections or equipment.

J. Exposed piping around fixtures or in other conspicuous places shall not show tool marks at fittings.

K. Isolate pipe from the building construction to prevent transmission of vibration to the structure and to eliminate noise.

L. Install piping such that any equipment connected to piping may be removed by

disconnecting two (2) flanges or unions and removing only one or two pipe sections. All equipment shall have bolted or screwed flanges or unions at pipe connections.

M. Install fittings for changes in direction and branch connections. T-drill system for mechanically formed tee connections and couplings, and Victaulic hole cut piping system are not allowed.

N. Do not route piping through transformer vaults or above transformers, panelboards, or switchboards, including the required service space for this equipment, unless the piping is serving this equipment.

O. Install groups of pipes parallel to each other, spaced to permit applying insulation and servicing of valves.

P. Install piping above accessible ceilings to allow sufficient space for ceiling panel removal.

Q. Install piping to permit valve servicing.

R. Install piping at indicated slopes.

S. Install piping free of sags and bends.

T. Install piping to allow application of insulation.

U. Eccentric reducing couplings shall be provided in all cases where air or water pockets would otherwise occur due to a reduction in pipe size.

V. Cap and plug all openings in pipes during construction with suitable metal plugs or cap to keep out dirt and rubbish until equipment is connected.

W. Install drains, consisting of a tee fitting, NPS 3/4 full port-ball valve, and short NPS 3/4 threaded nipple with cap, at low points in piping system mains and elsewhere as required for system drainage.

X. Select system components with pressure rating equal to or greater than system operating pressure.

Y. Fire-Barrier Penetrations: Maintain indicated fire rating of walls, partitions, ceilings, and floors at pipe penetrations. Seal pipe penetrations with firestop materials. Refer to Division 07 Section " FIRESTOPPING" for materials.

Z. Verify final equipment locations for roughing-in.

AA. Refer to equipment specifications in other Sections of these Specifications for roughing-in requirements.

BB. Provide proper access to materials and equipment that require inspection, repair, service, or maintenance.

CC. Minimum service access size for materials equipment/components above ceilings shall be 24" square.

3.2 PIPING JOINT CONSTRUCTION

A. Join pipe and fittings according to the following requirements and Division 22 Sections specifying piping systems.

B. Ream ends of pipes and tubes and remove burrs. Bevel plain ends of steel pipe.

C. Remove scale, slag, dirt, and debris from inside and outside of pipe and fittings before assembly.

D. Threaded Joints: Thread pipe with tapered pipe threads according to ASME B1.20.1. Cut threads full and clean using sharp dies. Ream threaded pipe ends to remove burrs and restore full ID. Join pipe fittings and valves as follows:

1. Apply appropriate tape or thread compound to external pipe threads unless dry seal threading is specified.

2. Damaged Threads: Do not use pipe or pipe fittings with threads that are corroded or damaged. Do not use pipe sections that have cracked or open welds.

3.3 PIPING CONNECTIONS

A. Pipe sizes indicated shall be carried full size to equipment served. Any change of size to match equipment connection shall be made within one foot of the equipment. At temperature control valves with sizes smaller than connected lines, reduction shall be made immediately adjacent to valves.

3.4 EQUIPMENT INSTALLATION - COMMON REQUIREMENTS

A. Install equipment to allow maximum possible headroom unless specific mounting heights are not indicated.

B. Install equipment level and plumb, parallel and perpendicular to other building systems and components in exposed interior spaces, unless otherwise indicated.

C. Install Plumbing equipment to facilitate service, maintenance, and repair or replacement of components. Connect equipment for ease of disconnecting, with minimum interference to other installations. Extend grease fittings to accessible locations.

D. Install equipment to allow right of way for piping installed at required slope.

3.5 ERECTION OF METAL SUPPORTS AND ANCHORAGES

A. Cut, fit, and place miscellaneous metal supports accurately in location, alignment, and elevation to support and anchor Plumbing materials and equipment.

3.6 GROUTING

A. Mix and install grout for Plumbing equipment base bearing surfaces, pump and other equipment base plates, and anchors.

B. Clean surfaces that will come into contact with grout.

C. Provide forms as required for placement of grout.

D. Avoid air entrapment during placement of grout.

E. Place grout, completely filling equipment bases.

F. Place grout on concrete bases and provide smooth bearing surface for equipment.

G. Place grout around anchors.

H. Cure placed grout.

END OF SECTION

SECTION 22 05 16 – EXPANSION JOINTS AND LOOPS FOR PLUMBING PIPING

PART 1 - GENERAL

1.1 SUMMARY

A. Section Includes:

1. Expansion joints.
2. Pipe loop installation.

1.2 PERFORMANCE REQUIREMENTS

A. Compatibility: Products shall be suitable for piping service fluids, materials, working pressures, and temperatures.

B. Capability: Products to absorb 200 percent of maximum axial movement between anchors.

1.3 SUBMITTALS

A. Product Data: For each type of product indicated the Contractor shall submit Shop Drawings indicating the product Manufacturer, size, performance and material.

B. Product Certificates: For each type of expansion joint, from manufacturer.

C. Maintenance Data: For expansion joints to include in maintenance manuals.

PART 2 - PRODUCTS

2.1 EXPANSION JOINTS

A. Flexible expansion joints shall be installed in the locations indicated on the drawings and shall be manufactured of ductile iron for domestic water, sanitary and storm drains conforming to the material requirements of ASTM A536 and ANSI/AWWA C153/A21.53. Foundry certification of material shall be readily available upon request. Flexible expansion joints for irrigation system must be manufactured of PVC.

B. Each flexible expansion joint shall be pressure tested prior to shipment against its own restraint to a minimum of 350 psi (250 psi for flexible expansion joints 2 inch and 30 inches diameter and larger.) A minimum 2:1 safety factor, determined from the published pressure rating, shall apply. Factory Mutual Approval for each size is required.

C. Each flexible expansion joint shall consist of an expansion joint designed and cast as an integral part of a ball and socket type flexible joint, having a minimum per ball deflection of 20º and 4-inches minimum expansion. Additional expansion sleeves shall be available and easily added or removed at the factory or in the field. The total required expansion for each expansion joint is shown on the contract drawings. Both standardized mechanical joint and flange end connections shall be available.

D. All internal surfaces (wetted parts) shall be lined with a minimum of 15 mils of fusion bonded epoxy conforming to the applicable requirements of ANSI/AWWA C213. Sealing gaskets shall be constructed of EPDM. The coating shall meet ANSI/NSF-61.

E. Exterior surfaces shall be coated with a minimum of 6 mils of fusion bonded epoxy conforming to the applicable requirements of ANSI/AWWA C116/A21.16.

F. Appropriately sized polyethylene sleeves, meeting ANSI/AWWA C105/A21.5, shall be included for direct buried applications.

G. Manufacturer's certification of compliance to the above standards and requirements shall be readily available upon request. The purchaser shall reserve the right to inspect the manufacturer's facility for compliance.

H. Expectable manufacturers:

1. FLEX-TEND as manufactured by EBAA Iron, INC. Eastland, TX., U.S.A.

2. Approved equal.

PART 3 - EXECUTION

3.1 EXPANSION-JOINT INSTALLATION

A. Install expansion joints of sizes matching sizes of piping in which they are installed.

3.2 PIPE LOOP INSTALLATION

A. Connect risers and branch connections to mains with at least five pipe fittings including tee in main.

B. Connect risers and branch connections to terminal units with at least four pipe fittings including tee in riser.

C. Connect mains and branch connections to terminal units with at least four pipe fittings.

END OF SECTION

SECTION 22 05 17 – SLEEVES AND SLEEVE SEALS FOR PLUMBING PIPING

PART 1 - GENERAL

1.1 SUMMARY

A. Section Includes:

1. Sleeves.
2. Stack-sleeve fittings.
3. Sleeve-seal systems.
4. Sleeve-seal fittings.
5. Grout.

1.2 SUBMITTALS

A. Product Data: For each type of product indicated.

PART 2 – PRODUCTS

2.1 SLEEVES

A. Cast-Iron Wall Pipes: Cast or fabricated of cast or ductile iron and equivalent to ductile-iron pressure pipe, with plain ends and integral waterstop unless otherwise indicated.

2.2 STACK-SLEEVE FITTINGS

A. Manufacturers: Subject to compliance with requirements, provide products by one of the following:

1. Smith, Jay R. Mfg.Co.
2. Zurn Specification Drainage Operation; Zurn Plumbing Products Group.
3. Metraflex.
4. Or Approved equal.

B. Description: Manufactured, cast-iron sleeve with integral clamping flange. Include clamping ring, bolts, and nuts for membrane flashing.

1. Underdeck Clamp: Clamping ring with setscrews.

2.3 SLEEVE-SEAL SYSTEMS

A. Manufacturers: Subject to compliance with requirements, provide products by one of the following:

1. Advance Products & Systems, Inc.
2. CALIPICO, Inc.
3. Metraflex Company (The)
4. Pipeline Seal and Insulator, Inc.
5. Proco Products, Inc.

6. Or approval equal.

B. Description: Modular sealing-element unit, designed for field assembly, for filling annular space between piping and sleeve.

1. Sealing Elements: EPDM-rubber interlocking links shaped to fit surface of pipe. Include type and number required for pipe material and size of pipe.

2. Pressure Plates: Carbon steel.

3. Connecting Bolts and Nuts: Carbon steel, with corrosion-resistant coating, of length required to secure pressure plates to sealing elements.

2.4 SLEEVE-SEAL FITTINGS

A. Manufacturers: Subject to compliance with requirements, provide products by one of the following:

1. Prescaled Systems

2. Flexicraft.

3. Link-Seal

4. Or approved equal.

B. Description: Manufactured plastic, sleeve-type, waterstop assembly made for imbedding in concrete slab or wall. Unit has plastic or rubber waterstop collar with center opening to match piping OD.

2.5 GROUT

A. Standard: ASTM C 1107, Grade B, post-hardening and volume-adjusting, dry, hydraulic-cement grout.

B. Characteristics: Nonshrink; recommended for interior and exterior applications.

C. Design Mix: 5000-psi, 28-day compressive strength.

D. Packaging: Premixed and factory packaged.

PART 3 – EXECUTION

3.1 SLEEVE INSTALLATION

A. Install sleeves for piping passing through penetrations in floors, partitions, roofs, and walls.

B. For sleeves that will have sleeve-seal system installed, select sleeves of size large enough to provide 1-inch annular clear space between piping and concrete slabs and walls.

1. Sleeves are not required for core-drilled holes.

C. Install sleeves in concrete floors, concrete roof slabs, and concrete walls as new slabs and walls are constructed.

1. Permanent sleeves are not required for holes in slabs formed by molded-PE or – PP sleeves.

2. Cut sleeves to length for mounting flush with both surfaces.

a. Exception: Extend sleeves installed in floors of mechanical equipment areas or other wet areas 2 inches above finished floor level.

3. Using grout, seal the space outside of sleeves in slabs and walls without sleeve-seal system.

D. Install sleeves for pipes passing through interior partitions.

1. Cut sleeves to length for mounting flush with both surfaces.

2. Install sleeves that are large enough to provide 1/4-inch annular clear space between sleeve and pipe or pipe insulation.

3. Seal annular space between sleeve and piping or piping insulation; use joint sealants Appropriate for size, depth, and location of joint. Comply with requirements for sealants specified in Section 079200 "Joint Sealants."

E. Fire-Barrier Penetrations: Maintain indicated fire rating of walls, partitions, ceilings, and floors at pipe penetrations. Seal pipe penetrations with firestop materials. Comply with requirements for firestopping specified in Section 078400 "Firestops."

3.2 STACK-SLEEVE-FITTING INSTALLATION

A. Install stack-sleeve fittings in new slabs as slabs are constructed.

1. Install fittings that are large enough to provide 1/4-inch annular clear space between sleeve and pipe or pipe insulation.

2. Secure flashing between clamping flanges for pipes penetrating floors with membrane waterproofing.

3. Install section of cast-iron soil pipe to extend sleeve to 2 inches above finished floor level.

4. Extend cast-iron sleeve fittings below floor slab as required to secure clamping ring if ring is specified.

5. Using grout, seal the space around outside of stack-sleeve fittings.

B. Fire-Barrier Penetrations: Maintain indicated fire rating of floors at pipe penetrations. Seal pipe penetrations with firestop materials. Comply with requirements for firestopping specified in Section 078400 “Firestops."

3.3 SLEEVE-SEAL-SYSTEM INSTALLATION

A. Install sleeve-seal systems in sleeves in exterior concrete walls and slabs-on-grade at service piping entries into building.

B. Select type, size, and number of sealing elements required for piping material and size and for sleeve ID or whole size. Position piping in center of sleeve. Center piping in penetration, assemble sleeve-seal system components, and install in annular space between piping and sleeve. Tighten bolts against pressure plates that cause sealing elements to expand and make a watertight seal.

3.4 SLEEVE-SEAL-FITTING INSTALLATION

A. Install sleeve-seal fittings in new walls and slabs as they are constructed.

B. Assemble fitting components of length to be flush with both surfaces of concrete slabs and walls. Position waterstop flange to be centered in concrete slab or wall.

C. Secure nailing flanges to concrete forms.

D. Using grout, seal the space around outside of sleeve-seal fittings.

3.5 SLEEVE AND SLEEVE-SEAL SCHEDULE

A. Use sleeves and sleeve seals for the following piping-penetration applications:

1. Concrete Slabs-on-Grade:
    a. Piping Smaller than NPS 6: Galvanized-steel wall sleeves with sleeve-seal system.
        1) Select sleeve size to allow for 1-inch annular clear space between piping and sleeve for installing sleeve-seal system.
    b. Piping NPS 6 and larger: Galvanized-steel wall sleeves with sleeve-seal system.
        1) Select sleeve size to allow for 1-inch annular clear space between piping and sleeve for installing sleeve-seal system.
2. Concrete Slabs above Grade:
    a. Piping Smaller than NPS 6: Galvanized-steel-pipe sleeves and Sleeve-seal fittings.
    b. Piping NPS 6 and larger: Galvanized-steel-pipe sleeves.
3. Interior Partitions:
    a. Piping Smaller than NPS 6: Galvanized-steel-pipe sleeves.
    b. Piping NPS 6 and larger: Galvanized-steel-sheet sleeves.

END OF SECTION

SECTION 22 05 18 – ESCUTCHEONS FOR PLUMBING PIPING

PART 1 - GENERAL

1.1 SUMMARY

A. Section Includes:

1. Escutcheons.
2. Floor plates.

1.2 SUBMITTALS

A. Product Data: For each type of product indicated.

PART 2 - PRODUCTS

2.1 ESCUTCHEONS

A. One-Piece, Cast-Brass Type: With polished, chrome-plated finish and setscrew fastener.

2.2 FLOOR PLATES

A. One-Piece Floor Plates: Cast-iron flange with holes for fasteners.

PART 3 - EXECUTION

3.1 INSTALLATION

A. Install escutcheons for piping penetrations of walls, ceilings, and finished floors.

B. Install escutcheons with ID to closely fit around pipe, tube, and insulation of insulated piping and with OD that completely covers opening.

1. Escutcheons for New Piping:

a. Piping with Fitting or Sleeve Protruding from Wall: One-piece, deep-pattern type.

b. Chrome-Plated Piping: One-piece, cast-brass type with polished, chrome-plated finish.

c. Insulated Piping: One-piece, stamped-steel type.

d. Bare Piping at Wall and Floor Penetrations in Finished Spaces: One-piece, cast- brass type with polished, chrome-plated finish.

e. Bare Piping at Ceiling Penetrations in Finished Spaces: One-piece, cast-brass type with polished, chrome-plated finish.

f. Bare Piping at Ceiling Penetrations in Finished Spaces: One-piece, stamped-steel type.

g. Bare Piping in Unfinished Service Spaces: One-piece, cast-brass.

h. Bare Piping in Unfinished Service Spaces: One-piece, stamped-steel type.

i. Bare Piping in Equipment Rooms: One-piece, cast-brass type with rough-brass finish.

j. Bare Piping in Equipment Rooms: One-piece, stamped-steel type.

C. Install floor plates for piping penetrations of equipment-room floors.

D. Install floor plates with ID to closely fit around pipe, tube, and insulation of piping and with OD that completely covers opening.

1. New Piping: One-piece, floor-plate type.

3.2 FIELD QUALITY CONTROL

A. Replace broken and damaged escutcheons and floor plates using new materials.

END OF SECTION

SECTION 22 05 19 – METERS AND GAGES FOR PLUMBING PIPING

PART 1 - GENERAL

1.1 SUMMARY

A. Section Includes:

1. Water Meters.
2. Dial-type pressure gages.
3. Test plugs and test plug kits.
4. Gage attachments.

1.2 SUBMITTALS

A. Product Data: For each type of product indicated.

B. Product certificates.

C. Operation and maintenance data.

PART 2 - PRODUCTS

2.1 WATER METERS

A. Water meter shall be “evoQ4 Electronic Meter” with Scancoder emulation manufactured by Elster AMCO Water, LLC, Ocala, FL or “Omni C2” with full electronic register manufactured by Sensus, Raleigh, NC, or approved equal.

B. Meter shall be of the size shown on the NYC DEP approved plans. Only meters on the current “List of Approved Water Meters and Related Equipment”, published by NYC DEP will be accepted as an approved equal.

C. The installation of water meters shall comply with RCNY Title 15, Chapter 20, “Rules and Regulations Governing and Restricting the Use and Supply of Water”.

2.2 PRESSURE GAGES

A. Direct-Mounted, Metal-Case, Dial-Type Pressure Gages:

1. Manufacturers: Subject to compliance with requirements, provide products by one of the following:
    a. Ashcroft Inc.
    b. Trerice, H. O. Co.
    c. Watts Regulator Co.; a div. of Watts Water Technologies, Inc.
    d. Weiss Instruments, Inc.
2. Standard: ASME B40.100.
3. Case: Liquid-filled type(s); cast aluminum or drawn steel; 4-1/2-inch nominal diameter.
4. Pressure-Element Assembly: Bourdon tube unless otherwise indicated.

5. Pressure Connection: Brass, with NPS 1/4 or NPS 1/2, ASME B1.20.1 pipe threads and bottom-outlet type unless back-outlet type is indicated.
6. Movement: Mechanical, with link to pressure element and connection to pointer.
7. Dial: Nonreflective aluminum with permanently etched scale markings graduated in psi.
8. Pointer: Dark-colored metal.
9. Window: Glass.
10. Ring: Metal.
11. Accuracy: Grade A, plus or minus 1 percent of middle half of scale range.

B. Direct-Mounted, Plastic-Case, Dial-Type Pressure Gages:

1. Manufacturers: Subject to compliance with requirements, available manufacturers offering products that may be incorporated into the Work include, but are not limited to, the following:
   a. Ashcroft Inc.
   b. Marsh Bellofram.
   c. Trerice, H. O. Co.
   d. Weiss Instruments, Inc.
2. Standard: ASME B40.100.
3. Case: Sealed type; plastic; 4-1/2-inch nominal diameter.
4. Pressure-Element Assembly: Bourdon tube unless otherwise indicated.
5. Pressure Connection: Brass, with NPS 1/4 or NPS 1/2, ASME B1.20.1 pipe threads and bottom-outlet type unless back-outlet type is indicated.
6. Movement: Mechanical, with link to pressure element and connection to pointer.
7. Dial: Nonreflective aluminum with permanently etched scale markings graduated in psi.
8. Pointer: Dark-colored metal.
9. Window: Glass.
10. Accuracy: Grade A, plus or minus 1 percent of middle half of scale range.

C. Remote-Mounted, Metal-Case, Dial-Type Pressure Gages:

1. Manufacturers: Subject to compliance with requirements, provide products by one of the following:
   a. Ashcroft Inc.
   b. Marsh Bellofram.
   c. Trerice, H. O. Co.
   d. Weiss Instruments, Inc.
2. Standard: ASME B40.100.

3. Case: Liquid-filled type; cast aluminum or drawn steel; 4-1/2-inch nominal diameter with back flange and holes for panel mounting.
4. Pressure-Element Assembly: Bourdon tube unless otherwise indicated.
5. Pressure Connection: Brass, with NPS 1/4 or NPS 1/2, ASME B1.20.1 pipe threads and bottom-outlet type unless back-outlet type is indicated.
6. Movement: Mechanical, with link to pressure element and connection to pointer.
7. Dial: Nonreflective aluminum with permanently etched scale markings graduated in psi.
8. Pointer: Dark-colored metal.
9. Window: Glass or plastic.
10. Ring: Metal.
11. Accuracy: Grade A, plus or minus 1 percent of middle half of scale range.

D. Remote-Mounted, Plastic-Case, Dial-Type Pressure Gages:

1. Manufacturers: Subject to compliance with requirements, provide products by one of the following:
   a. Ashcroft Inc.
   b. Trerice, H. O. Co.
   c. Weiss Instruments, Inc.
2. Standard: ASME B40.100.
3. Case: Sealed type; plastic; 4-1/2-inch nominal diameter with back flange and holes for panel mounting.
4. Pressure-Element Assembly: Bourdon tube unless otherwise indicated.
5. Pressure Connection: Brass, with NPS 1/4 or NPS 1/2, ASME B1.20.1 pipe threads and bottom-outlet type unless back-outlet type is indicated.
6. Movement: Mechanical, with link to pressure element and connection to pointer.
7. Dial: Nonreflective aluminum with permanently etched scale markings graduated in psi.
8. Pointer: Dark-colored metal.
9. Window: Glass or plastic.
10. Accuracy: Grade A, plus or minus 1 percent of middle half of scale range.

2.3 TEST PLUGS

A. Manufacturers: Subject to compliance with requirements, provide products by one of the following:

1. Flow Design, Inc.
2. Miljoco Corporation.
3. National Meter, Inc.
4. Peterson Equipment Co., Inc.

5. Sisco Manufacturing Company, Inc.
6. Trerice, H. O. Co.
7. Watts Regulator Co.; a div. of Watts Water Technologies, Inc.
8. Weiss Instruments, Inc.

B. Description: Test-station fitting made for insertion into piping tee fitting.

C. Body: Stainless steel with core inserts and gasketed and threaded cap. Include extended stem on units to be installed in insulated piping.

D. Thread Size: NPS 1/4 (DN 8) or NPS 1/2 (DN 15), ASME B1.20.1 pipe thread.

E. Minimum Pressure and Temperature Rating: 500 psig at 200 deg F (3450 kPa at 93 deg C).

F. Core Inserts: Chlorosulfonated polyethylene synthetic and EPDM or neoprene or Nordel, but all potable water rated.

2.4 TEST-PLUG KITS

A. Manufacturers: Subject to compliance with requirements, provide products by one of the following:

1. Flow Design, Inc.
2. Miljoco Corporation.
3. National Meter, Inc.
4. Peterson Equipment Co., Inc.
5. Sisco Manufacturing Company, Inc.
6. Trerice, H. O. Co.
7. Watts Regulator Co.; a div. of Watts Water Technologies, Inc.
8. Weiss Instruments, Inc.

B. Furnish two test-plug kit(s) containing two thermometer(s), one pressure gage and adapter, and carrying case. Thermometer sensing elements, pressure gage, and adapter probes shall be of diameter to fit test plugs and of length to project into piping.

C. Low-Range Thermometer: Small, bimetallic insertion type with 1- to 2-inch- (25- to 51-mm-) diameter dial and tapered-end sensing element. Dial range shall be at least 25 to 125 deg F (minus 4 to plus 52 deg C).

D. High-Range Thermometer: Small, bimetallic insertion type with 1- to 2-inch- (25- to 51-mm-) diameter dial and tapered-end sensing element. Dial range shall be at least 0 to 220 deg F (minus 18 to plus 104 deg C).

E. Pressure Gage: Small, Bourdon-tube insertion type with 2- to 3-inch- (51- to 76-mm-) diameter dial and probe. Dial range shall be at least 0 to 200 psig (0 to 1380 kPa).

F. Carrying Case: Metal or plastic, with formed instrument padding.

2.5 GAGE ATTACHMENTS

A. Snubbers: ASME B40.100, brass; with NPS 1/4 or NPS 1/2, ASME B1.20.1 pipe threads and piston-type surge-dampening device. Include extension for use on insulated piping.

B. Valves: Brass or stainless-steel needle, with NPS 1/4 or NPS 1/2, ASME B1.20.1 pipe threads.

PART 3 - EXECUTION

3.1 INSTALLATION

A. Install thermowells with socket extending a minimum of 2 inches into fluid and in vertical position in piping tees.

B. Install thermowells of sizes required to match thermometer connectors. Include bushings if required to match sizes.

C. Install thermowells with extension on insulated piping.

D. Fill thermowells with heat-transfer medium.

E. Install direct-mounted thermometers in thermowells and adjust vertical and tilted positions.

F. Install remote-mounted thermometer bulbs in thermowells and install cases on panels; connect cases with tubing and support tubing to prevent kinks. Use minimum tubing length.

G. Install direct-mounted pressure gages in piping tees with pressure gage located on pipe at the most readable position.

H. Install remote-mounted pressure gages on panel.

I. Install valve and snubber in piping for each pressure gage for fluids.

J. Install thermometers in the following locations:

1. Inlet and outlet of each water heater.

K. Install pressure gages in the following locations:

1. Building water service entrance into building.
2. Inlet and outlet of each pressure-reducing valve.
3. Suction and discharge of each domestic water pump.

L. Install meters and gages adjacent to machines and equipment to allow service and maintenance of meters, gages, machines, and equipment.

M. Adjust faces of meters and gages to proper angle for best visibility.

3.2 THERMOMETER SCHEDULE

A. Thermometers at inlet and outlet of each domestic water heater shall be one of the following:

1. Liquid-filled, bimetallic-actuated type.
2. Industrial-style, liquid-in-glass type.

B. Thermometer stems shall be of length to match thermowell insertion length.

3.3 THERMOMETER SCALE-RANGE SCHEDULE

A. Scale Range for Domestic Cold-Water Piping: 0 to 100 deg F.

B. Scale Range for Domestic Hot-Water Piping: 0 to 250 deg F.

3.4 PRESSURE-GAGE SCHEDULE

A. Pressure gages at discharge of each water service into building shall be one of the following:

1. Liquid-filled Sealed, direct-mounted, metal case.
2. Sealed, direct-mounted, plastic case.

B. Pressure gages at inlet and outlet of each water pressure-reducing valve shall be one of the following:

1. Liquid-filled Sealed Open-front, pressure-relief Solid-front, pressure-relief Insert type, direct-mounted, metal case.
2. Sealed, direct-mounted, plastic case.

C. Pressure gages at suction and discharge of each domestic water pump shall be one of the following:

1. Liquid-filled, -mounted, metal case.
2. Sealed, direct-mounted, plastic case.

3.5 PRESSURE-GAGE SCALE-RANGE SCHEDULE

A. Scale Range for Water Service Piping: 0 to 100 psi.

B. Scale Range for Domestic Water Piping: 0 to 160 psi.

END OF SECTION

SECTION 22 05 23 – GENERAL DUTY VALVES FOR PLUMBING PIPING

PART 1 - GENERAL

1.1 SUMMARY

A. Section Includes:

1. Brass ball valves.
2. Bronze ball valves.
3. Bronze swing check valves.
4. Bronze gate valves.
5. Iron gate Valve.
6. Lubricated Plug Valves.

B. Related Sections:

1. Section 22 05 53 "Identification for Plumbing Piping and Equipment" for valve tags and schedules.
2. Section 22 11 16 "Domestic Water Piping" for valves applicable only to this piping.

1.2 DEFINITIONS

A. CWP: Cold working pressure.

B. EPDM: Ethylene propylene copolymer rubber.

C. NBR: Acrylonitrile-butadiene, Buna-N, or nitrile rubber.

D. NRS: Nonrising stem.

E. OS&Y: Outside screw and yoke.

F. RS: Rising stem.

G. SWP: Steam working pressure.

1.3 ACTION SUBMITTALS

A. Product Data: For each type of valve indicated.

1.4 QUALITY ASSURANCE

A. Source Limitations for Valves: Obtain each type of valve from single source from single manufacturer.

B. ASME Compliance:

1. ASME B16.10 and ASME B16.34 for ferrous valve dimensions and design criteria.
2. ASME B31.9 for building services piping valves.

C. NSF Compliance: NSF 61 for valve materials for potable-water service.

EFFECTIVE JAN. 4TH, 2014, ALL PROPOSED INSTALLATIONS OF VALVES TO BE UTILIZED ON ALL DOMESTIC DRINKING WATER SERVICES FOR HUMAN CONSUMPTION, MUST BE LEAD-FREE IN COMPLIANCE WITH THE AMENDED FEDERAL LAW, SAFE DRINKING WATER ACT (SDWA).

1.5 DELIVERY, STORAGE, AND HANDLING

A. Prepare valves for shipping as follows:

1. Protect internal parts against rust and corrosion.
2. Protect threads and flange faces ends.
3. Set ball and plug valves open to minimize exposure of functional surfaces.
4. Block check valves in either closed or open position.

B. Use the following precautions during storage:

1. Maintain valve end protection.
2. Store valves indoors and maintain at higher than ambient dew point temperature. If outdoor storage is necessary, store valves off the ground in watertight enclosures.

C. Use sling to handle large valves; rig sling to avoid damage to exposed parts. Do not use hand-wheels or stems as lifting or rigging points.

PART 2 - PRODUCTS

2.1 GENERAL REQUIREMENTS FOR VALVES

A. Refer to valve schedule articles for applications of valves.

B. Valve Pressure and Temperature Ratings: Not less than indicated and as required for system pressures and temperatures.

C. Valve Sizes: Same as upstream piping unless otherwise indicated.

D. Valve Actuator Types:

1. Handwheel: For valves other than quarter-turn types.

E. Valves in Insulated Piping: With 2-inch stem extensions and the following features:

1. Gate Valves: With rising stem.
2. Ball Valves: With extended operating handle of non-thermal-conductive material, and protective sleeve that allows operation of valve without breaking the vapor seal or disturbing insulation.

F. Valve-End Connections:

1. Flanged: With flanges according to ASME B16.1 for iron valves.

   Valve solder-joint connections are common in smaller sizes of plumbing piping. Soldering and brazing methods used to achieve required pressure-temperature ratings may damage internal valve parts. Special installation requirements for soldered valves may make threaded valves more cost-effective.

2. Solder Joint: With sockets according to ASME B16.18.
3. Threaded: With threads according to ASME B1.20.1.

G. Valve Bypass and Drain Connections: MSS SP-45.

2.2 BRASS BALL VALVES

A. Two-Piece, Regular-Port, Brass Ball Valves with Brass Trim:

1. Manufacturers: Subject to compliance with requirements, provide products by one of the following:
    a. Hammond Valve.
    b. Jamesbury; a subsidiary of Metso Automation.
    c. Legend Valve.
    d. Marwin Valve; a division of Richards Industries.
    e. Milwaukee Valve Company.
    f. Or approved equal
2. Description:
    a. Standard: MSS SP-110.
    b. SWP Rating: 150 psig.
    c. CWP Rating: 600 psig.
    d. Body Design: Two piece.
    e. Body Material: Forged brass.
    f. Ends: Threaded.
    g. Seats: PTFE or TFE.
    h. Stem: Brass.
    i. Ball: Chrome-plated brass.
    j. Port: Regular.

B. Three-Piece, Full-Port, Brass Ball Valves with Brass Trim:

1. Manufacturers: Subject to compliance with requirements, provide products by one of the following:
    a. Jomar International, LTD.
    b. Kitz Corporation.
    c. Red-White Valve Corporation.
    d. Watts Regulator Co.; a division of Watts Water Technologies, Inc.
    e. Or approved equal.
2. Description:
    a. Standard: MSS SP-110.
    b. SWP Rating: 150 psig.
    c. CWP Rating: 600 psig.
    d. Body Design: Three piece.
    e. Body Material: Forged brass.

f. Ends: Threaded.

g. Seats: PTFE or TFE.

h. Stem: Brass.

i. Ball: Chrome-plated brass.

j. Port: Full.

k. Vented.

l. Port: Full.

2.3 BRONZE BALL VALVES

A. Three-Piece, Full-Port, Bronze Ball Valves with Bronze Trim:

1. Manufacturers: Subject to compliance with requirements, provide products by one of the following:

a. Conbraco Industries, Inc.; Apollo Valves.

b. DynaQuip Controls.

c. Hammond Valve.

d. Milwaukee Valve Company.

e. NIBCO INC.

f. Red-White Valve Corporation.

g. Or approved equal.

2. Description:

a. Standard: MSS SP-110.

b. SWP Rating: 150 psig.

c. CWP Rating: 600 psig.

d. Body Design: Three piece.

e. Body Material: Bronze.

f. Ends: Threaded.

g. Seats: PTFE or TFE.

h. Stem: Bronze.

i. Ball: Chrome-plated brass.

j. Port: Full.

2.4 BRONZE SWING CHECK VALVES

A. Class 125, Bronze Swing Check Valves with Bronze Disc:

1. Manufacturers: Subject to compliance with requirements, provide products by one of the following:

a. American Valve, Inc.

b. Crane Co.; Crane Valve Group; Crane Valves.

c. Crane Co.; Crane Valve Group; Jenkins Valves.
d. Crane Co.; Crane Valve Group; Stockham Division.
e. Hammond Valve.
f. Kitz Corporation.
g. Milwaukee Valve Company.
h. NIBCO INC.
i. Powell Valves.
j. Red-White Valve Corporation.
k. Watts Regulator Co.; a division of Watts Water Technologies, Inc.
l. Zy-Tech Global Industries, Inc.
m. Or approved equal.

2. Description:
a. Standard: MSS SP-80, Type 3.
b. CWP Rating: 200 psig.
c. Body Design: Horizontal flow.
d. Body Material: ASTM B 62, bronze.
e. Ends: Threaded.
f. Disc: Bronze.

B. Class 150, Bronze Swing Check Valves with Bronze Disc:
1. Manufacturers: Subject to compliance with requirements, provide products by one of the following:
a. American Valve, Inc.
b. Crane Co.; Crane Valve Group; Crane Valves.
c. Crane Co.; Crane Valve Group; Jenkins Valves.
d. Crane Co.; Crane Valve Group; Stockham Division.
e. Kitz Corporation.
f. Milwaukee Valve Company.
g. NIBCO INC.
h. Red-White Valve Corporation.
i. Zy-Tech Global Industries, Inc.
j. Or approved equal.

2. Description:
a. Standard: MSS SP-80, Type 3.
b. CWP Rating: 300 psig.
c. Body Design: Horizontal flow.

d. Body Material: ASTM B 62, bronze.

e. Ends: Threaded.

f. Disc: Bronze.

2.5 BRONZE GATE VALVES

A. Class 125, NRS Bronze Gate Valves:

1. Manufacturers: Subject to compliance with requirements, provide products by one of the following:

a. American Valve, Inc.

b. Crane Co.; Crane Valve Group; Crane Valves.

c. Crane Co.; Crane Valve Group; Jenkins Valves.

d. Crane Co.; Crane Valve Group; Stockham Division.

e. Hammond Valve.

f. Kitz Corporation.

g. Milwaukee Valve Company.

h. NIBCO INC.

i. Powell Valves.

j. Red-White Valve Corporation.

k. Watts Regulator Co.; a division of Watts Water Technologies, Inc.

l. Zy-Tech Global Industries, Inc.

m. Or approved equal.

2. Description:

a. Standard: MSS SP-80, Type 1.

b. CWP Rating: 200 psig.

c. Body Material: ASTM B 62, bronze with integral seat and screw-in bonnet.

d. Ends: Threaded or solder joint.

e. Stem: Bronze.

f. Disc: Solid wedge; bronze.

g. Packing: Asbestos free.

h. Handwheel: Malleable iron, bronze.

B. Class 125, RS Bronze Gate Valves:

1. Manufacturers: Subject to compliance with requirements, provide products by one of the following:

a. American Valve, Inc.

b. Crane Co.; Crane Valve Group; Crane Valves.

c. Crane Co.; Crane Valve Group; Jenkins Valves.

d. Crane Co.; Crane Valve Group; Stockham Division.
e. Hammond Valve.
f. Kitz Corporation.
g. Milwaukee Valve Company.
h. NIBCO INC.
i. Powell Valves.
j. Watts Regulator Co.; a division of Watts Water Technologies, Inc.
k. Zy-Tech Global Industries, Inc.
l. Or approved equal.

2. Description:
a. Standard: MSS SP-80, Type 2.
b. CWP Rating: 200 psig.
c. Body Material: ASTM B 62, bronze with integral seat and screw-in bonnet.
d. Ends: Threaded.
e. Stem: Bronze.
f. Disc: Solid wedge; bronze.
g. Packing: Asbestos free.
h. Handwheel: Malleable iron.

C. Class 150, RS Bronze Gate Valves:
1. Manufacturers: Subject to compliance with requirements, [provide products by one of the following:
a. Crane Co.; Crane Valve Group; Crane Valves.
b. Crane Co.; Crane Valve Group; Stockham Division.
c. Hammond Valve.
d. Kitz Corporation.
e. Milwaukee Valve Company.
f. NIBCO INC.
g. Powell Valves.
h. Watts Regulator Co.; a division of Watts Water Technologies, Inc.
i. Zy-Tech Global Industries, Inc.
j. Or approved equal.

2. Description:
a. Standard: MSS SP-80, Type 2.
b. CWP Rating: 300 psig (2070 kPa).
c. Body Material: ASTM B 62, bronze with integral seat and union-ring bonnet.

d. Ends: Threaded.

e. Stem: Bronze.

f. Disc: Solid wedge; bronze.

g. Packing: Asbestos free.

h. Handwheel: Malleable iron

2.6 IRON GATE VALVES

A. Class 125, NRS, Iron Gate Valves:

1. Manufacturers: Subject to compliance with requirements, provide products by one of the following:

a. Crane Co.; Crane Valve Group; Crane Valves.

b. Crane Co.; Crane Valve Group; Jenkins Valves.

c. Crane Co.; Crane Valve Group; Stockham Division.

d. Flo Fab Inc.

e. Hammond Valve.

f. Kitz Corporation.

g. Legend Valve.

h. Milwaukee Valve Company.

i. NIBCO INC.

j. Powell Valves.

k. Red-White Valve Corporation.

l. Watts Regulator Co.; a division of Watts Water Technologies, Inc.

m. Zy-Tech Global Industries, Inc.

n. Or approved equal.

2. Description:

a. Standard: MSS SP-70, Type I.

b. CWP Rating: 200 psig .

c. Body Material: ASTM A 126, gray iron with bolted bonnet.

d. Ends: Flanged.

e. Trim: Bronze.

f. Disc: Solid wedge.

g. Packing and Gasket: Asbestos free.

B. Class 125, OS&Y, Iron Gate Valves:

1. Manufacturers: Subject to compliance with requirements, provide products by one of the following:

a. Crane Co.; Crane Valve Group; Crane Valves.

b. Crane Co.; Crane Valve Group; Jenkins Valves.
c. Crane Co.; Crane Valve Group; Stockham Division.
d. Flo Fab Inc.
e. Hammond Valve.
f. Kitz Corporation.
g. Legend Valve.
h. Milwaukee Valve Company.
i. NIBCO INC.
j. Powell Valves.
k. Red-White Valve Corporation.
l. Watts Regulator Co.; a division of Watts Water Technologies, Inc.
m. Zy-Tech Global Industries, Inc.
n. Or approved equal.

2. Description:
a. Standard: MSS SP-70, Type I.
b. CWP Rating: 200 psig .
c. Body Material: ASTM A 126, gray iron with bolted bonnet.
d. Ends: Flanged.
e. Trim: Bronze.
f. Disc: Solid wedge.
g. Packing and Gasket: Asbestos free.

C. Class 250, NRS, Iron Gate Valves:
1. Manufacturers: Subject to compliance with requirements, provide products by one of the following:
a. Crane Co.; Crane Valve Group; Crane Valves.
b. Crane Co.; Crane Valve Group; Stockham Division.
c. NIBCO INC.
d. Or approved equal.

2. Description:
a. Standard: MSS SP-70, Type I.
b. CWP Rating: 500 psig .
c. Body Material: ASTM A 126, gray iron with bolted bonnet.
d. Ends: Flanged.
e. Trim: Bronze.
f. Disc: Solid wedge.

g. Packing and Gasket: Asbestos free.

D. Class 250, OS&Y, Iron Gate Valves:

1. Manufacturers: Subject to compliance with requirements, provide products by one of the following:

a. Crane Co.; Crane Valve Group; Crane Valves.

b. Crane Co.; Crane Valve Group; Stockham Division.

c. Hammond Valve.

d. Milwaukee Valve Company.

e. NIBCO INC.

f. Powell Valves.

g. Watts Regulator Co.; a division of Watts Water Technologies, Inc.

h. Or approved equal.

2. Description:

a. Standard: MSS SP-70, Type I.

b. CWP Rating: 500 psig .

c. Body Material: ASTM A 126, gray iron with bolted bonnet.

d. Ends: Flanged.

e. Trim: Bronze.

f. Disc: Solid wedge.

g. Packing and Gasket: Asbestos free.

2.7 LUBRICATED PLUG VALVES

A. Class 125, Regular-Gland, Lubricated Plug Valves with Threaded Ends:

1. Manufacturers: Subject to compliance with requirements, provide products by one of the following:

a. Nordstrom Valves, Inc.

b. Val-Matic Valve & Mfg. Corp.

c. Scv Valve, LLC

d. Or approved equal.

2. Description:

a. Standard: MSS SP-78, Type II.

b. CWP Rating: 200 psig (1380 kPa).

c. Body Material: ASTM A 48/A 48M or ASTM A 126, cast iron with lubrication-sealing system.

d. Pattern: Regular or short.

e. Plug: Cast iron or bronze with sealant groove.

B. Class 125, Regular-Gland, Lubricated Plug Valves with Flanged Ends:

1. Manufacturers: Subject to compliance with requirements, provide products by one of the following:

a. Nordstrom Valves, Inc.

b. Val-Matic Valve & Mfg. Corp.

c. Scv Valve, LLC

d. Or approved equal.

2. Description:

a. Standard: MSS SP-78, Type II.

b. CWP Rating: 200 psig.

c. Body Material: ASTM A 48/A 48M or ASTM A 126, cast iron with lubrication-sealing system.

d. Pattern: Regular or short.

e. Plug: Cast iron or bronze with sealant groove.

C. Class 125, Cylindrical, Lubricated Plug Valves with Threaded Ends:

1. Manufacturers: Subject to compliance with requirements, provide products by one of the following:

a. Homestead Valve; a division of Olson Technologies, Inc.

b. Milliken Valve Company.

c. R & M Energy Systems; a unit of Robbins & Myers, Inc.

d. Or approved equal.

2. Description:

a. Standard: MSS SP-78, Type IV.

b. CWP Rating: 200 psig.

c. Body Material: ASTM A 48/A 48M or ASTM A 126, cast iron with lubrication-sealing system.

d. Pattern: Regular or short.

e. Plug: Cast iron or bronze with sealant groove.

D. Class 125, Cylindrical, Lubricated Plug Valves with Flanged Ends:

1. Manufacturers: Subject to compliance with requirements, provide products by one of the following:

a. Homestead Valve; a division of Olson Technologies, Inc.

b. Milliken Valve Company.

c. R & M Energy Systems; a unit of Robbins & Myers, Inc.

d. Or approved equal.

2. Description:
    a. Standard: MSS SP-78, Type IV.
    b. CWP Rating: 200 psig .
    c. Body Material: ASTM A 48/A 48M or ASTM A 126, cast iron with lubrication-sealing system.
    d. Pattern: Regular or short.
    e. Plug: Cast iron or bronze with sealant groove.

E. Class 250, Regular-Gland, Lubricated Plug Valves with Threaded Ends:
1. Manufacturers: Subject to compliance with requirements, provide products by one of the following:
    a. Nordstrom Valves, Inc.
    b. Val-Matic Valve & Mfg. Corp.
    c. Scv Valve, LLC
    d. Or approved equal.
2. Description:
    a. Standard: MSS SP-78, Type II.
    b. CWP Rating: 400 psig.
    c. Body Material: ASTM A 48/A 48M or ASTM A 126, cast iron with lubrication-sealing system.
    d. Pattern: Regular or short.
    e. Plug: Cast iron or bronze with sealant groove.

F. Class 250, Regular-Gland, Lubricated Plug Valves with Flanged Ends:
1. Manufacturers: Subject to compliance with requirements, provide products by one of the following:
    a. Nordstrom Valves, Inc.
    b. Val-Matic Valve & Mfg. Corp.
    c. Scv Valve, LLC
    d. Or approved equal
2. Description:
    a. Standard: MSS SP-78, Type II.
    b. CWP Rating: 400 psig.
    c. Body Material: ASTM A 48/A 48M or ASTM A 126, cast iron with lubrication-sealing system.
    d. Pattern: Regular or short
    e. Plug: Cast iron or bronze with sealant groove.

G. Class 250, Cylindrical, Lubricated Plug Valves with Threaded Ends:

1. Manufacturers: Subject to compliance with requirements, provide products by one of the following:

a. Homestead Valve; a division of Olson Technologies, Inc.

b. Milliken Valve Company.

c. R & M Energy Systems; a unit of Robbins & Myers, Inc.

d. Or approved equal.

2. Description:

a. Standard: MSS SP-78, Type IV.

b. CWP Rating: 400 psig.

c. Body Material: ASTM A 48/A 48M or ASTM A 126, cast iron with lubrication-sealing system.

d. Pattern: Regular or short.

e. Plug: Cast iron or bronze with sealant groove.

H. Class 250, Cylindrical, Lubricated Plug Valves with Flanged Ends:

1. Manufacturers: Subject to compliance with requirements, provide products by one of the following:

a. Homestead Valve; a division of Olson Technologies, Inc.

b. Milliken Valve Company.

c. R & M Energy Systems; a unit of Robbins & Myers, Inc.

d. Or approved equal.

2. Description:

a. Standard: MSS SP-78, Type IV.

b. CWP Rating: 400 psig.

c. Body Material: ASTM A 48/A 48M or ASTM A 126, Grade 40 cast iron with lubrication-sealing system.

d. Pattern: Regular or short.

e. Plug: Cast iron or bronze with sealant groove.

PART 3 - EXECUTION

3.1 EXAMINATION

A. Examine valve interior for cleanliness, freedom from foreign matter, and corrosion. Remove special packing materials, such as blocks, used to prevent disc movement during shipping and handling.

B. Operate valves in positions from fully open to fully closed. Examine guides and seats made accessible by such operations.

C. Examine threads on valve and mating pipe for form and cleanliness.

D. Examine mating flange faces for conditions that might cause leakage. Check bolting for proper size, length, and material. Verify that gasket is of proper size, that its material composition is suitable for service, and that it is free from defects and damage.

E. Do not attempt to repair defective valves; replace with new valves.

3.2 VALVE INSTALLATION

A. Install valves with unions or flanges at each piece of equipment arranged to allow service, maintenance, and equipment removal without system shutdown.

B. Locate valves for easy access and provide separate support where necessary.

C. Install valves in horizontal piping with stem at or above center of pipe.

D. Install valves in position to allow full stem movement.

E. Install check valves for proper direction of flow and as follows:

1. Swing Check Valves: In horizontal position with hinge pin level.

3.3 ADJUSTING

A. Adjust or replace valve packing after piping systems have been tested and put into service but before final adjusting and balancing. Replace valves if persistent leaking occurs.

3.4 GENERAL REQUIREMENTS FOR VALVE APPLICATIONS

A. If valve applications are not indicated, use the following:

1. Shutoff Service: Ball, gate, or plug valves.

2. Pump-Discharge Check Valves:

a. NPS 2 and Smaller: Bronze swing check valves with bronze disc.

B. If valves with specified SWP classes or CWP ratings are not available, the same types of valves with higher SWP classes or CWP ratings may be substituted.

C. Select valves, with the following end connections:

1. For Copper Tubing, NPS 2 and Smaller: Threaded ends except where solder-joint valve-end option is indicated in valve schedules below.

2. For Steel Piping, NPS 2-1/2 to NPS 4: Flanged ends except where threaded valve-end option is indicated in valve schedules below.

3.5 DOMESTIC, HOT- AND COLD-WATER VALVE SCHEDULE

A. Pipe NPS 2 and Smaller:

1. Bronze Valves: May be provided with solder-joint ends instead of threaded ends.

2. Ball Valves: Two piece, regular port, brass with brass trim.

3. Bronze Swing Check Valves: Class 150 disc.

4. Bronze Gate Valves: Class 150 RS.

B. Pipe NPS 2-1/2 and Larger:

1. Iron Valves, NPS 2-1/2 to NPS 4: May be provided with threaded ends instead of flanged ends.

2. Iron Gate Valves: Class 250, OS&Y.

END OF SECTION

SECTION 22 05 29 – HANGERS AND SUPPORTS FOR PLUMBING PIPING AND EQUIPMENT

PART 1 - GENERAL

1.1 RELATED DOCUMENTS

A. The work under this section shall include all labor, material, plant equipment, services and administrative tasks required to complete and make operable the plumbing work shown on the Drawings and specified herein.

1.2 SUMMARY

A. Section Includes:

1. Metal pipe hangers and supports.
2. Trapeze pipe hangers.
3. Metal framing systems.
4. Thermal-hanger shield inserts.
5. Fastener systems.
6. Pipe stands.
7. Pipe positioning systems.
8. Equipment supports.

B. Related Sections:

1. Section 22 05 00 "Common Work Results for Plumbing”.

1.3 DEFINITIONS

A. MSS: Manufacturers Standardization Society of the Valve and Fittings Industry Inc.

1.4 PERFORMANCE REQUIREMENTS

A. Design Criteria: Design trapeze pipe hangers and equipment supports, including comprehensive engineering analysis by a professional engineer licensed in the State of New York, using performance requirements and design criteria indicated.

B. Structural Performance: Hangers and supports for plumbing piping and equipment shall withstand the effects of gravity loads and stresses within limits and under conditions indicated according to ASCE/SEI 7.

1.5 SUBMITTALS

A. Product Data: For each type of product indicated.

B. Shop Drawings: Show fabrication and installation details and include calculations for the following; include Product Data for components:

1. Trapeze pipe hangers.
2. Pipe hangers, rods, washers and nuts.
3. Pipe stands.
4. Equipment supports.

PART 2 – PRODUCTS

2.1 METAL PIPE HANGERS AND SUPPORTS

A. Carbon-Steel Pipe Hangers and Supports:

1. Description: MSS SP-58, Types 1 through 58, factory-fabricated components.
2. Galvanized Metallic Coatings: Pre-galvanized or hot dipped.
3. Nonmetallic Coatings: Plastic coating, jacket, or liner.
4. Padded Hangers: Hanger with fiberglass or other pipe insulation pad or cushion to support bearing surface of piping.
5. Hanger Rods: Continuous-thread rod, nuts, and washer made of carbon steel.

B. Copper Pipe Hangers:

1. Description: MSS SP-58, Types 1 through 58, copper-coated-steel, factory-fabricated components.
2. Hanger Rods: Continuous-thread rod, nuts, and washer made of stainless steel.

2.2 TRAPEZE PIPE HANGERS

A. Description: MSS SP-69, Type 59, shop- or field-fabricated pipe-support assembly made from structural carbon-steel shapes with MSS SP-58 carbon-steel hanger rods, nuts, saddles, and U- bolts.

2.3 METAL FRAMING SYSTEMS

A. MFMA Manufacturer Metal Framing Systems:

1. Manufacturers: Subject to compliance with requirements, provide products by one of the following:
   a. Allied Tube & Conduit.
   b. Cooper B-Line, Inc.
   c. Flex-Strut Inc.
   d. GS Metals Corp.
   e. Thomas & Betts Corporation.
   f. Unistrut Corporation; Tyco International, Ltd.
   g. Wesanco, Inc.
   h. Or approved equal.
2. Description: Shop- or field-fabricated pipe-support assembly for supporting multiple parallel pipes.
3. Standard: MFMA-4.
4. Channels: Continuous slotted steel channel with inturned lips.
5. Channel Nuts: Formed or stamped steel nuts or other devices designed to fit into channel slot and, when tightened, prevent slipping along channel.
6. Hanger Rods: Continuous-thread rod, nuts, and washer made of carbon steel.

7. Metallic Coating: Electroplated zinc, Hot-dipped galvanized.
8. Paint Coating: Epoxy.
9. Plastic Coating: PVC, Polyurethane.
10. Combination Coating:

2.4 THERMAL-HANGER SHIELD INSERTS

A. Manufacturers: Subject to compliance with requirements, provide products by one of the following:

1. Carpenter & Paterson, Inc.
2. Clement Support Services.
3. ERICO International Corporation.
4. National Pipe Hanger Corporation.
5. PHS Industries, Inc.
6. Pipe Shields, Inc.; a subsidiary of Piping Technology & Products, Inc.
7. Piping Technology & Products, Inc.
8. Rilco Manufacturing Co., Inc.
9. Value Engineered Products, Inc.
10. Or approved equal.

B. Insulation-Insert Material for Cold Piping: ASTM C 552, Type II cellular glass with 100-psig (688-kPa) minimum compressive strength and vapor barrier.

C. Insulation-Insert Material for Hot Piping: ASTM C 552, Type II cellular glass with 100-psig (688-kPa)] minimum compressive strength.

D. For Trapeze or Clamped Systems: Insert and shield shall cover entire circumference of pipe.

E. For Clevis or Band Hangers: Insert and shield shall cover lower 180 degrees of pipe.

F. Insert Length: Extend 2 inches (50 mm) beyond sheet metal shield for piping operating below ambient air temperature.

2.5 FASTENER SYSTEMS

A. Powder-Actuated Fasteners: Threaded-steel stud, for use in hardened portland cement concrete with pull-out, tension, and shear capacities appropriate for supported loads and building materials where used.

B. Mechanical-Expansion Anchors: Insert-wedge-type, zinc-coated stainless- steel anchors, for use in hardened portland cement concrete; with pull-out, tension, and shear capacities appropriate for supported loads and building materials where used.

2.6 PIPE STANDS

A. General Requirements for Pipe Stands: Shop- or field-fabricated assemblies made of manufactured corrosion-resistant components to support roof-mounted piping.

B. Compact Pipe Stand: One-piece plastic unit with integral-rod roller, pipe clamps, or V-shaped cradle to support pipe, for roof installation without membrane penetration.

C. Low-Type, Single-Pipe Stand: One-piece stainless-steel base unit with plastic roller, for roof installation without membrane penetration.

D. High-Type, Single-Pipe Stand:

1. Description: Assembly of base, vertical and horizontal members, and pipe support, for roof installation without membrane penetration.

2. Base: Stainless steel.

3. Vertical Members: Two or more cadmium-plated-steel or stainless-steel, continuous- thread rods.

4. Horizontal Member: Cadmium-plated-steel or stainless-steel rod with plastic or stainless- steel, roller-type pipe support.

E. High-Type, Multiple-Pipe Stand:

1. Description: Assembly of bases, vertical and horizontal members, and pipe supports, for roof installation without membrane penetration.

2. Bases: One or more; plastic.

3. Vertical Members: Two or more protective-coated-steel channels.

4. Horizontal Member: Protective-coated-steel channel.

5. Pipe Supports: Galvanized-steel, clevis-type pipe hangers.

F. Curb-Mounting-Type Pipe Stands: Shop- or field-fabricated pipe supports made from structural-steel shapes, continuous-thread rods, and rollers, for mounting on permanent stationary roof curb.

2.7 PIPE POSITIONING SYSTEMS

A. Description: IAPMO PS 42, positioning system of metal brackets, clips, and straps for positioning piping in pipe spaces; for plumbing fixtures in commercial applications.

2.8 EQUIPMENT SUPPORTS

A. Description: Welded, shop- or field-fabricated equipment support made from structural carbon- steel shapes.

2.9 MISCELLANEOUS MATERIALS

A. Structural Steel: ASTM A 36/A 36M, carbon-steel plates, shapes, and bars; black and galvanized.

B. Grout: ASTM C 1107, factory-mixed and -packaged, dry, hydraulic-cement, nonshrink and nonmetallic grout; suitable for interior and exterior applications.

1. Properties: Nonstaining, noncorrosive, and nongaseous.

2. Design Mix: 5000-psi, 28-day compressive strength.

PART 3 - EXECUTION

3.1 HANGER AND SUPPORT INSTALLATION

A. Metal Pipe-Hanger Installation: Comply with MSS SP-69 and MSS SP-89. Install hangers, supports, clamps, and attachments as required to properly support piping from the building structure.

B. Metal Trapeze Pipe-Hanger Installation: Comply with MSS SP-69 and MSS SP-89. Arrange for grouping of parallel runs of horizontal piping, and support together on field-fabricated trapeze pipe hangers.

1. Pipes of Various Sizes: Support together and space trapezes for smallest pipe size or install intermediate supports for smaller diameter pipes as specified for individual pipe hangers.

2. Field fabricate from ASTM A 36/A 36M, carbon-steel shapes selected for loads being supported. Weld steel according to AWS D1.1/D1.1M.

C. Metal Framing System Installation: Arrange for grouping of parallel runs of piping, and support together on field-assembled metal framing systems.

D. Thermal-Hanger Shield Installation: Install in pipe hanger or shield for insulated piping.

E. Fastener System Installation:

1. Install powder-actuated fasteners for use in lightweight concrete or concrete slabs less than 4 inches (100 mm) thick in concrete after concrete is placed and completely cured. Use operators that are licensed by powder-actuated tool manufacturer. Install fasteners according to powder-actuated tool manufacturer's operating manual.

2. Install mechanical-expansion anchors in concrete after concrete is placed and completely cured. Install fasteners according to manufacturer's written instructions.

F. Pipe Positioning-System Installation: Install support devices to make rigid supply and waste piping connections to each plumbing fixture.

G. Install hangers and supports complete with necessary attachments, inserts, bolts, rods, nuts, washers, and other accessories.

H. Equipment Support Installation: Fabricate from welded-structural-steel shapes.

I. Install hangers and supports to allow controlled thermal and seismic movement of piping systems, to permit freedom of movement between pipe anchors, and to facilitate action of expansion joints, expansion loops, expansion bends, and similar units.

J. Install lateral bracing with pipe hangers and supports to prevent swaying.

K. Install building attachments within concrete slabs or attach to structural steel. Install additional attachments at concentrated loads, including valves, flanges, and strainers, NPS 2-1/2 (DN 65) and larger and at changes in direction of piping. Install concrete inserts before concrete is placed; fasten inserts to forms and install reinforcing bars through openings at top of inserts.

L. Load Distribution: Install hangers and supports so that piping live and dead loads and stresses from movement will not be transmitted to connected equipment.

M. Pipe Slopes: Install hangers and supports to provide indicated pipe slopes and to not exceed maximum pipe deflections allowed by ASME B31.9 for building services piping.

N. Insulated Piping:

1. Attach clamps and spacers to piping.

a. Piping Operating above Ambient Air Temperature: Clamp may project through insulation.

b. Piping Operating below Ambient Air Temperature: Use thermal-hanger shield insert with clamp sized to match OD of insert.

c. Do not exceed pipe stress limits allowed by ASME B31.9 for building services piping.

2. Install MSS SP-58, Type 39, protection saddles if insulation without vapor barrier is indicated. Fill interior voids with insulation that matches adjoining insulation.

a. Option: Thermal-hanger shield inserts may be used. Include steel weight- distribution plate for pipe NPS 4and larger if pipe is installed on rollers.

3. Install MSS SP-58, Type 40, protective shields on cold piping with vapor barrier. Shields shall span an arc of 180 degrees.

a. Option: Thermal-hanger shield inserts may be used. Include steel weight- distribution plate for pipe NPS 4 and larger if pipe is installed on rollers.

4. Shield Dimensions for Pipe: Not less than the following:

a. NPS 1/4 to NPS 3-1/2: 12 inches long and 0.048 inch thick.

b. NPS 4: 12 inches long and 0.06 inch thick.

c. NPS 5 to NPS 6 : 18 inches long and 0.06 inch thick.

d. NPS 8 to NPS 14: 24 inches long and 0.075 inch thick.

e. NPS 16 to NPS 24: 24 inches long and 0.105 inch thick.

5. Pipes NPS 8 and Larger: Include wood or reinforced calcium-silicate-insulation inserts of length at least as long as protective shield.

6. Thermal-Hanger Shields: Install with insulation same thickness as piping insulation.

3.2 EQUIPMENT SUPPORTS

A. Fabricate structural-steel stands to suspend equipment from structure overhead or to support equipment above floor.

B. Grouting: Place grout under supports for equipment and make bearing surface smooth.

C. Provide lateral bracing, to prevent swaying, for equipment supports.

3.3 ADJUSTING

A. Hanger Adjustments: Adjust hangers to distribute loads equally on attachments and to achieve indicated slope of pipe.

B. Trim excess length of continuous-thread hanger and support rods to 1-1/2 inches.

3.4 PAINTING

A. Touchup: Clean field welds and abraded areas of shop paint. Paint exposed areas immediately after erecting hangers and supports. Use same materials as used for shop painting. Comply with SSPC-PA 1 requirements for touching up field-painted surfaces.

1. Apply paint by brush or spray to provide a minimum dry film thickness of 2.0 mils (0.05 mm).

B. Touchup: Cleaning and touchup painting of field welds, bolted connections, and abraded areas of shop paint on miscellaneous metal are specified in Section 099123 "Interior Painting." Section 099600 "High-Performance Coatings."

C. Galvanized Surfaces: Clean welds, bolted connections, and abraded areas and apply galvanizing-repair paint to comply with ASTM A 780.

3.5 HANGER AND SUPPORT SCHEDULE

A. Specific hanger and support requirements are in Sections specifying piping systems and equipment.

B. Comply with MSS SP-69 for pipe-hanger selections and applications that are not specified in Piping system Sections.

C. Use hangers and supports with galvanized metallic coatings for piping and equipment that will not have field-applied finish.

D. Use nonmetallic coatings on attachments for electrolytic protection where attachments are in direct contact with copper tubing.

E. Use carbon-steel pipe hangers and supports metal trapeze pipe hangers, metal framing systems and attachments for general service applications.

F. Use stainless-steel pipe hangers and stainless-steel or corrosion-resistan attachments for hostile environment applications.

G. Use copper-plated pipe hangers and stainless-steel attachments for copper piping and tubing.

H. Use padded hangers for piping that is subject to scratching.

I. Use thermal-hanger shield inserts for insulated piping and tubing.

J. Horizontal-Piping Hangers and Supports: Unless otherwise indicated and except as specified in piping system Sections, install the following types:

1. Adjustable, Steel Clevis Hangers (MSS Type 1): For suspension of noninsulated or insulated, stationary pipes NPS 1/2 to NPS 30.

2. Yoke-Type Pipe Clamps (MSS Type 2): For suspension of up to 1050 deg F, pipes NPS 4 to NPS 24, requiring up to 4 inches of insulation.

3. Carbon- or Alloy-Steel, Double-Bolt Pipe Clamps (MSS Type 3): For suspension of pipes NPS 3/4 to NPS 36, requiring clamp flexibility and up to 4 inches of insulation.

4. Steel Pipe Clamps (MSS Type 4): For suspension of cold and hot pipes NPS 1/2 to NPS 24 if little or no insulation is required.

5. Pipe Hangers (MSS Type 5): For suspension of pipes NPS 1/2 to NPS 4, to allow off-center closure for hanger installation before pipe erection.

6. Adjustable, Swivel Split- or Solid-Ring Hangers (MSS Type 6): For suspension of noninsulated, stationary pipes NPS 3/4 to NPS 8.

7. Adjustable, Steel Band Hangers (MSS Type 7): For suspension of noninsulated, stationary pipes NPS 1/2 to NPS 8 .

8. Adjustable Band Hangers (MSS Type 9): For suspension of noninsulated, stationary pipes NPS 1/2 to NPS 8.

9. Adjustable, Swivel-Ring Band Hangers (MSS Type 10): For suspension of noninsulated, stationary pipes NPS 1/2 to NPS 8 .

10. Split Pipe Ring with or without Turnbuckle Hangers (MSS Type 11): For suspension of noninsulated, stationary pipes NPS 3/8 to NPS 8.

11. Extension Hinged or Two-Bolt Split Pipe Clamps (MSS Type 12): For suspension of noninsulated, stationary pipes NPS 3/8 to NPS 3

12. U-Bolts (MSS Type 24): For support of heavy pipes NPS 1/2 to NPS 30.

13. Clips (MSS Type 26): For support of insulated pipes not subject to expansion or contraction.

14. Pipe Saddle Supports (MSS Type 36): For support of pipes NPS 4 to NPS 36, with steel-pipe base stanchion support and cast-iron floor flange or carbon-steel plate.

15. Pipe Stanchion Saddles (MSS Type 37): For support of pipes NPS 4 to NPS 36, with steel-pipe base stanchion support and cast-iron floor flange or carbon- steel plate, and with U-bolt to retain pipe.

16. Adjustable Pipe Saddle Supports (MSS Type 38): For stanchion-type support for pipes NPS 2-1/2 to NPS 36 if vertical adjustment is required, with steel- pipe base stanchion support and cast-iron floor flange.

17. Single-Pipe Rolls (MSS Type 41): For suspension of pipes NPS 1 to NPS 30, from two rods if longitudinal movement caused by expansion and contraction might occur.

18. Adjustable Roller Hangers (MSS Type 43): For suspension of pipes NPS 2-1/2 to NPS 24, from single rod if horizontal movement caused by expansion and contraction might occur.

19. Complete Pipe Rolls (MSS Type 44): For support of pipes NPS 2 to NPS 42 if longitudinal movement caused by expansion and contraction might occur but vertical adjustment is not necessary.

20. Pipe Roll and Plate Units (MSS Type 45): For support of pipes NPS 2 to NPS 24 if small horizontal movement caused by expansion and contraction might occur and vertical adjustment is not necessary.

21. Adjustable Pipe Roll and Base Units (MSS Type 46): For support of pipes NPS 2 to NPS 30 if vertical and lateral adjustment during installation might be required in addition to expansion and contraction.

K. Vertical-Piping Clamps: Unless otherwise indicated and except as specified in piping system Sections, install the following types:

1. Extension Pipe or Riser Clamps (MSS Type 8): For support of pipe risers NPS 3/4 to NPS 24.
2. Carbon- or Alloy-Steel Riser Clamps (MSS Type 42): For support of pipe risers NPS 3/4 to NPS 24if longer ends are required for riser clamps.

L. Hanger-Rod Attachments: Unless otherwise indicated and except as specified in piping system Sections, install the following types:

1. Steel Turnbuckles (MSS Type 13): For adjustment up to 6 inches (150 mm) for heavy loads.
2. Steel Clevises (MSS Type 14): For 120 to 450 deg F piping installations.
3. Swivel Turnbuckles (MSS Type 15): For use with MSS Type 11, split pipe rings.
4. Malleable-Iron Sockets (MSS Type 16): For attaching hanger rods to various types of building attachments.
5. Steel Weldless Eye Nuts (MSS Type 17): For 120 to 450 deg F piping installations.

M. Building Attachments: Unless otherwise indicated and except as specified in piping system Sections, install the following types:

1. Steel or Malleable Concrete Inserts (MSS Type 18): For upper attachment to suspend pipe hangers from concrete ceiling.
2. Top-Beam C-Clamps (MSS Type 19): For use under roof installations with bar-joist construction, to attach to top flange of structural shape.
3. Side-Beam or Channel Clamps (MSS Type 20): For attaching to bottom flange of beams, channels, or angles.
4. Center-Beam Clamps (MSS Type 21): For attaching to center of bottom flange of beams.
5. Welded Beam Attachments (MSS Type 22): For attaching to bottom of beams if loads are considerable and rod sizes are large.
6. C-Clamps (MSS Type 23): For structural shapes.
7. Top-Beam Clamps (MSS Type 25): For top of beams if hanger rod is required tangent to flange edge.
8. Side-Beam Clamps (MSS Type 27): For bottom of steel I-beams.
9. Steel-Beam Clamps with Eye Nuts (MSS Type 28): For attaching to bottom of steel I- beams for heavy loads.
10. Linked-Steel Clamps with Eye Nuts (MSS Type 29): For attaching to bottom of steel I-beams for heavy loads, with link extensions.
11. Malleable-Beam Clamps with Extension Pieces (MSS Type 30): For attaching to structural steel.
12. Welded-Steel Brackets: For support of pipes from below or for suspending from above by using clip and rod. Use one of the following for indicated loads:
    a. Light (MSS Type 31): 750 lb .

b. Medium (MSS Type 32): 1500 lb .

c. Heavy (MSS Type 33): 3000 lb .

13. Side-Beam Brackets (MSS Type 34): For sides of steel or wooden beams.

14. Plate Lugs (MSS Type 57): For attaching to steel beams if flexibility at beam is required.

15. Horizontal Travelers (MSS Type 58): For supporting piping systems subject to linear horizontal movement where headroom is limited.

N. Saddles and Shields: Unless otherwise indicated and except as specified in piping system Sections, install the following types:

1. Steel-Pipe-Covering Protection Saddles (MSS Type 39): To fill interior voids with insulation that matches adjoining insulation.

2. Protection Shields (MSS Type 40): Of length recommended in writing by manufacturer to prevent crushing insulation.

3. Thermal-Hanger Shield Inserts: For supporting insulated pipe.

O. Spring Hangers and Supports: Unless otherwise indicated and except as specified in piping system Sections, install the following types:

1. Restraint-Control Devices (MSS Type 47): Where indicated to control piping movement.

2. Spring Cushions (MSS Type 48): For light loads if vertical movement does not exceed 1-1/4 inches (32 mm).

3. Spring-Cushion Roll Hangers (MSS Type 49): For equipping Type 41, roll hanger with springs.

4. Spring Sway Braces (MSS Type 50): To retard sway, shock, vibration, or thermal expansion in piping systems.

5. Variable-Spring Hangers (MSS Type 51): Preset to indicated load and limit variability factor to 25 percent to allow expansion and contraction of piping system from hanger.

6. Variable-Spring Base Supports (MSS Type 52): Preset to indicated load and limit variability factor to 25 percent to allow expansion and contraction of piping system from base support.

7. Variable-Spring Trapeze Hangers (MSS Type 53): Preset to indicated load and limit variability factor to 25 percent to allow expansion and contraction of piping system from trapeze support.

8. Constant Supports: For critical piping stress and if necessary to avoid transfer of stress from one support to another support, critical terminal, or connected equipment. Include auxiliary stops for erection, hydrostatic test, and load-adjustment capability. These supports include the following types:

a. Horizontal (MSS Type 54): Mounted horizontally.

b. Vertical (MSS Type 55): Mounted vertically.

c. Trapeze (MSS Type 56): Two vertical-type supports and one trapeze member.

P. Comply with MSS SP-69 for trapeze pipe-hanger selections and applications that are not specified in piping system Sections.

Q. Comply with MFMA-103 for metal framing system selections and applications that are not specified in piping system Sections.

R. Use powder-actuated fasteners or mechanical-expansion anchors instead of building attachments where required in concrete construction.

S. Use pipe positioning systems in pipe spaces behind plumbing fixtures to support supply and waste piping for plumbing fixtures.

END OF SECTION

SECTION 22 05 53 – IDENTIFICATION FOR PLUMBING PIPING AND EQUIPMENT

PART 1 - GENERAL

1.1 SUMMARY

A. Section Includes:

1. Equipment labels.
2. Warning signs and labels.
3. Pipe labels.
4. Stencils.
5. Valve tags.
6. Warning tags.

1.2 ACTION SUBMITTALS

A. Product Data: For each type of product indicated.

B. Samples: For color, letter style, and graphic representation required for each identification material and device.

C. Equipment Label Schedule: Include a listing of all equipment to be labeled with the proposed content for each label.

D. Valve numbering scheme.

E. Valve Schedules: For each piping system to include in maintenance manuals.

1.3 COORDINATION

A. Coordinate installation of identifying devices with completion of covering and painting of surfaces where devices are to be applied.

B. Coordinate installation of identifying devices with locations of access panels and doors.

C. Install identifying devices before installing acoustical ceilings and similar concealment.

PART 2 - PRODUCTS

2.1 EQUIPMENT LABELS

A. Metal Labels for Equipment:

1. Material and Thickness: Aluminum, 0.032-inch minimum thickness, and having predrilled or stamped holes for attachment hardware.
2. Minimum Label Size: Length and width vary for required label content, but not less than 2-1/2 by 3/4 inch.
3. Minimum Letter Size: 1/4 inch for name of units if viewing distance is less than 24 inches, 1/2 inch for viewing distances up to 72 inches, and proportionately larger lettering for greater viewing distances. Include secondary lettering two-thirds to three-fourths the size of principal lettering.
4. Fasteners: Stainless-steel self-tapping screws.

5. Adhesive: Contact-type permanent adhesive, compatible with label and with substrate.

B. Plastic Labels for Equipment:

1. Material and Thickness: Multilayer, multicolor, plastic labels for mechanical engraving, 1/8 inch (3.2 mm) thick, and having predrilled holes for attachment hardware.
2. Letter Color: Black.
3. Background Color: Yellow.
4. Maximum Temperature: Able to withstand temperatures up to 160 deg F.
5. Minimum Label Size: Length and width vary for required label content, but not less than 2-1/2 by 3/4 inch.
6. Minimum Letter Size: 1/4 inch for name of units if viewing distance is less than 24 inches, 1/2 inch for viewing distances up to 72 inches, and proportionately larger lettering for greater viewing distances. Include secondary lettering two-thirds to three-fourths the size of principal lettering.
7. Fasteners: Stainless-steel rivets or self-tapping screws.
8. Adhesive: Contact-type permanent adhesive, compatible with label and with substrate.

C. Label Content: Include equipment's Drawing designation or unique equipment number, Drawing numbers where equipment is indicated (plans, details, and schedules), plus the Specification Section number and title where equipment is specified.

D. Equipment Label Schedule: For each item of equipment to be labeled, on 8-1/2-by-11-inch bond paper. Tabulate equipment identification number and identify Drawing numbers where equipment is indicated (plans, details, and schedules), plus the Specification Section number and title where equipment is specified. Equipment schedule shall be included in operation and maintenance data.

2.2 WARNING SIGNS AND LABELS

A. Material and Thickness: Multilayer, multicolor, plastic labels for mechanical engraving, 1/8 inch thick, and having predrilled holes for attachment hardware.

B. Letter Color: Black.

C. Background Color: White

D. Maximum Temperature: Able to withstand temperatures up to 160 deg F (71 deg C).

E. Minimum Label Size: Length and width vary for required label content, but not less than 2-1/2 by 3/4 inch (64 by 19 mm).

F. Minimum Letter Size: 1/4 inch (6.4 mm) for name of units if viewing distance is less than 24 inches (600 mm), 1/2 inch (13 mm) for viewing distances up to 72 inches (1830 mm), and proportionately larger lettering for greater viewing distances. Include secondary lettering two-thirds to three-fourths the size of principal lettering.

G. Fasteners: Stainless-steel rivets or self-tapping screws.

H. Adhesive: Contact-type permanent adhesive, compatible with label and with substrate.

I. Label Content: Include caution and warning information, plus emergency notification instructions.

2.3 PIPE LABELS

A. General Requirements for Manufactured Pipe Labels: Preprinted, color-coded, with lettering indicating service, and showing flow direction.

B. Pretensioned Pipe Labels: Precoiled, semirigid plastic formed to cover full circumference of pipe and to attach to pipe without fasteners or adhesive.

C. Self-Adhesive Pipe Labels: Printed plastic with contact-type, permanent-adhesive backing.

D. Pipe Label Contents: Include identification of piping service using same designations or abbreviations as used on Drawings, pipe size, and an arrow indicating flow direction.

1. Flow-Direction Arrows: Integral with piping system service lettering to accommodate both directions, or as separate unit on each pipe label to indicate flow direction.

2. Lettering Size: At least 1-1/2 inches (38 mm) high.

2.4 STENCILS

A. Stencils: Prepared with letter sizes according to ASME A13.1 for piping; and minimum letter height of 3/4 inch (19 mm) for access panel and door labels, equipment labels, and similar operational instructions.

1. Stencil Material: Aluminum.

2. Stencil Paint: Exterior, gloss, alkyd enamel black unless otherwise indicated. Paint may be in pressurized spray-can form.

3. Identification Paint: Exterior, acrylic enamel in colors according to ASME A13.1 unless otherwise indicated.

2.5 VALVE TAGS

A. Valve Tags: Stamped or engraved with 1/4-inch letters for piping system abbreviation and 1/2-inch numbers.

1. Tag Material: Brass, 0.032-inch (0.8-mm) minimum thickness, and having predrilled or stamped holes for attachment hardware.

2. Fasteners: Brass wire-link or beaded chain; or S-hook.

B. Valve Schedules: For each piping system, on 8-1/2-by-11-inch bond paper. Tabulate valve number, piping system, system abbreviation (as shown on valve tag), location of valve (room or space), normal-operating position (open, closed, or modulating), and variations for identification. Mark valves for emergency shutoff and similar special uses.

1. Valve-tag schedule shall be included in operation and maintenance data.

2.6 WARNING TAGS

A. Warning Tags: Preprinted or partially preprinted, accident-prevention tags, of plasticized card stock with matte finish suitable for writing.

1. Size: Approximately 4 by 7 inches.

2. Fasteners: Brass grommet and wire.

3. Nomenclature: Large-size primary caption such as "DANGER," "CAUTION," or "DO NOT OPERATE."
4. Color: Yellow background with black lettering.

PART 3 - EXECUTION

3.1 PREPARATION

A. Clean piping and equipment surfaces of substances that could impair bond of identification devices, including dirt, oil, grease, release agents, and incompatible primers, paints, and encapsulants.

3.2 EQUIPMENT LABEL INSTALLATION

A. Install or permanently fasten labels on each major item of mechanical equipment.

B. Locate equipment labels where accessible and visible.

3.3 PIPE LABEL INSTALLATION

A. Piping Color-Coding: Painting of piping is specified in Architectural Section “Interior Painting."

B. Stenciled Pipe Label Option: Stenciled labels may be provided instead of manufactured pipe labels, at Installer's option. Install stenciled pipe labels with painted, color-coded bands or rectangles, complying with ASME A13.1, on each piping system.

1. Identification Paint: Use for contrasting background.
2. Stencil Paint: Use for pipe marking.

C. Locate pipe labels where piping is exposed or above accessible ceilings in finished spaces; machine rooms; accessible maintenance spaces such as shafts, tunnels, and plenums; and exterior exposed locations as follows:

1. Near each valve and control device.
2. Near each branch connection, excluding short takeoffs for fixtures and terminal units. Where flow pattern is not obvious, mark each pipe at branch.
3. Near penetrations through walls, floors, ceilings, and inaccessible enclosures.
4. At access doors, manholes, and similar access points that permit view of concealed piping.
5. Near major equipment items and other points of origination and termination.
6. Spaced at maximum intervals of 50 feet along each run. Reduce intervals to 25 feet in areas of congested piping and equipment.
7. On piping above removable acoustical ceilings. Omit intermediately spaced labels.

D. Pipe Label Color Schedule:

1. Domestic Water Piping:
   a. Background Color: Blue
   b. Letter Color: White.

2. Sanitary Waste and Storm Drainage Piping:
    a. Background Color: Black.
    b. Letter Color: Yellow.

3.4 VALVE-TAG INSTALLATION

A. Install tags on valves and control devices in piping systems, except check valves; valves within factory-fabricated equipment units; shutoff valves; faucets; convenience and lawn-watering hose connections; and similar roughing-in connections of end-use fixtures and units. List tagged valves in a valve schedule.

B. Valve-Tag Application Schedule: Tag valves according to size, shape, and color scheme and with captions similar to those indicated in the following subparagraphs:
    1. Valve-Tag Size and Shape:
        a. Cold Water: 2 inches, round.
        b. Hot Water: 2 inches, round.
    2. Valve-Tag Color:
        a. Cold Water: Green.
        b. Hot Water: Green.
    3. Letter Color:
        a. Cold Water: Black.
        b. Hot Water: Black.

3.5 WARNING-TAG INSTALLATION

A. Write required message on, and attach warning tags to, equipment and other items where required.

END OF SECTION

SECTION 22 07 19 – PLUMBING PIPING INSULATION

PART 1 - GENERAL

1.1 SUMMARY

A. Section Includes:

1. Insulation Materials:
   a. Flexible elastomeric.
   b. Mineral fiber.
   c. Polyolefin.
2. Insulating cements.
3. Adhesives.
4. Mastics.
5. Sealants.
6. Factory-applied jackets.
7. Field-applied fabric-reinforcing mesh.
8. Field-applied jackets.
9. Tapes.
10. Securements.
11. Corner angles.

1.3 SUBMITTALS

A. Product Data: For each type of product indicated.

B. LEED Submittal:

1. Product Data for Credit EQ 4.1: For adhesives and sealants, including printed statement of VOC content.

C. Shop Drawings:

1. Detail application of protective shields, saddles, and inserts at hangers for each type of insulation and hanger.
2. Detail attachment and covering of heat tracing inside insulation
3. Detail insulation application at pipe expansion joints for each type of insulation.
4. Detail insulation application at elbows, fittings, flanges, valves, and specialties for each type of insulation.
5. Detail removable insulation at piping specialties, equipment connections, and access panels.
6. Detail application of field-applied jackets.
7. Detail application at linkages of control devices.
8. Detail field application for each equipment type.

D. Field quality-control reports.

1.4 QUALITY ASSURANCE

A. Fire-Test-Response Characteristics: Insulation and related materials shall have fire-test response characteristics indicated, as determined by testing identical products per ASTM E 84, by a testing and inspecting agency acceptable to authorities having jurisdiction. Factory label insulation and jacket materials and adhesive, mastic, tapes, and cement material containers, with appropriate markings of applicable testing and inspecting agency.

1. Insulation Installed Indoors: Flame-spread index of 25 or less, and smoke-developed index of 50 or less.
2. Insulation Installed Outdoors: Flame-spread index of 75 or less, and smoke-developed index of 150 or less.

PART 2 - PRODUCTS

2.1 INSULATION MATERIALS

A. Comply with requirements in Part 3 schedule articles for where insulating materials shall be applied.

B. Products shall not contain asbestos, lead, mercury, or mercury compounds.

C. Product that come in contact with stainless steel shall have a leachable chloride content of less than 50 ppm when tested according to ASTM C 871.

D. Insulation materials for use on austenitic stainless steel shall be qualified as acceptable according to ASTM C 795.

E. Foam insulation materials shall not use CFC or HCFC blowing agents in the manufacturing process.

F. Flexible Elastomeric: Closed-cell, sponge- or expanded-rubber materials. Comply with ASTM C 534, Type I for tubular materials and Type II for sheet materials.

1. Products: Subject to compliance with requirements, provide one of the following:
   a. Aeroflex USA Inc.; Aerocel.
   b. Armacell LLC; AP Armaflex.
   c. RBX Corporation; Insul-Sheet 1800 and Insul-Tube 180.

G. Mineral-Fiber, Preformed Pipe Insulation:

1. Products: Subject to compliance with requirements, provide one of the following:
   a. Johns Manville; Micro-Lok.
   b. Knauf Insulation; 1000 Pipe Insulation.
   c. Owens Corning; Fiberglas Pipe Insulation.
2. Type I, 850 deg F Materials: Mineral or glass fibers bonded with a thermosetting resin. Comply with ASTM C 547, Type I, Grade A, with factory-applied ASJ. Factory-applied jacket requirements are specified in "Factory-Applied Jackets" Article.

H. Polyolefin: Unicellular, polyethylene thermal plastic insulation. Comply with ASTM C 534 or ASTM C 1427, Type I, Grade 1 for tubular materials and Type II, Grade 1 for sheet materials.

1. Products: Subject to compliance with requirements, provide one of the following:

a. Armacell LLC; Tubolit.

b. Nomaco Inc.; IMCOLOCK, IMCOSHEET, NOMALOCK, and NOMAPLY.

c. RBX Corporation; Therma-cell.

2.2 INSULATING CEMENTS

A. Mineral-Fiber, Hydraulic-Setting Insulating and Finishing Cement: Comply with ASTM C 449/C 449M.

1. Products: Subject to compliance with requirements, provide one of the following:

a. Insulco, Division of MFS, Inc.; SmoothKote.

b. P. K. Insulation Mfg. Co., Inc.; PK No. 127, and Quik-Cote.

c. Rock Wool Manufacturing Company; Delta One Shot.

2.3 ADHESIVES

A. Materials shall be compatible with insulation materials, jackets, and substrates and for bonding insulation to itself and to surfaces to be insulated, unless otherwise indicated.

B. Flexible Elastomeric and Polyolefin Adhesive: Comply with MIL-A-24179A, Type II, Class I.

1. Products: Subject to compliance with requirements, provide one of the following:

a. Aeroflex USA Inc.; Aeroseal.

b. Armacell LCC; 520 Adhesive.

c. Foster Products Corporation, H. B. Fuller Company; 85-75.

d. RBX Corporation; Rubatex Contact Adhesive.

2. For indoor applications, use adhesive that has a VOC content of 50 g/L or less when calculated according to 40 CFR 59, Subpart D (EPA Method 24).

C. Mineral-Fiber Adhesive: Comply with MIL-A-3316C, Class 2, Grade A.

1. Products: Subject to compliance with requirements, provide one of the following:

a. Childers Products, Division of ITW; CP-82.

b. Foster Products Corporation, H. B. Fuller Company; 85-20.

c. ITW TACC, Division of Illinois Tool Works; S-90/80.

d. Marathon Industries, Inc.; 225.

e. Mon-Eco Industries, Inc.; 22-25.

2. For indoor applications, use adhesive that has a VOC content of 80 g/L or less when calculated according to 40 CFR 59, Subpart D (EPA Method 24).

D. ASJ Adhesive, and FSK and PVDC Jacket Adhesive: Comply with MIL-A-3316C, Class 2, Grade A for bonding insulation jacket lap seams and joints.

1. Products: Subject to compliance with requirements, provide one of the following:

a. Childers Products, Division of ITW; CP-82.

b. Foster Products Corporation, H. B. Fuller Company; 85-20.

c. ITW TACC, Division of Illinois Tool Works; S-90/80.

d. Marathon Industries, Inc.; 225.

e. Mon-Eco Industries, Inc.; 22-25.

2. For indoor applications, use adhesive that has a VOC content of 50 g/L or less when calculated according to 40 CFR 59, Subpart D (EPA Method 24).

E. PVC Jacket Adhesive: Compatible with PVC jacket.

1. Products: Subject to compliance with requirements, provide one of the following:

a. Dow Chemical Company (The); 739, Dow Silicone.

b. Johns-Manville; Zeston Perma-Weld, CEEL-TITE Solvent Welding Adhesive.

c. P.I.C. Plastics, Inc.; Welding Adhesive.

d. Speedline Corporation; Speedline Vinyl Adhesive.

2. For indoor applications, use adhesive that has a VOC content of 50 g/L or less when calculated according to 40 CFR 59, Subpart D (EPA Method 24).

2.4 MASTICS

A. Materials shall be compatible with insulation materials, jackets, and substrates; comply with MIL-C-19565C, Type II.

1. For indoor applications, use mastics that have a VOC content of 50 g/L or less when calculated according to 40 CFR 59, Subpart D (EPA Method 24).

B. Vapor-Barrier Mastic: Water based; suitable for indoor and outdoor use on below ambient services.

1. Products: Subject to compliance with requirements, provide one of the following:

a. Childers Products, Division of ITW; CP-35.

b. Foster Products Corporation, H. B. Fuller Company; 30-90.

c. ITW TACC, Division of Illinois Tool Works; CB-50.

d. Marathon Industries, Inc.; 590.

e. Mon-Eco Industries, Inc.; 55-40.

2. Water-Vapor Permeance: ASTM E 96, Procedure B, 0.013 perm at 43-mil dry film thickness.

3. Service Temperature Range: Minus 20 to plus 180 deg F.

4. Solids Content: ASTM D 1644, 59 percent by volume and 71 percent by weight.

5. Color: White.

C. Breather Mastic: Water based; suitable for indoor and outdoor use on above ambient services

1. Products: Subject to compliance with requirements, provide one of the following:
   a. Childers Products, Division of ITW; CP-10.
   b. Foster Products Corporation, H. B. Fuller Company; 35-00.
   c. ITW TACC, Division of Illinois Tool Works; CB-05/15.
   d. Marathon Industries, Inc.; 550.
   e. Mon-Eco Industries, Inc.; 55-50.
2. Water-Vapor Permeance: ASTM F 1249, 3 perms at 0.0625-inch dry film thickness.
3. Service Temperature Range: Minus 20 to plus 200 deg F.
4. Solids Content: 63 percent by volume and 73 percent by weight.
5. Color: White.

2.5 SEALANTS

A. Joint Sealants:

1. Joint Sealants for Cellular-Glass Products: Subject to compliance with requirements, provide one of the following:
   a. Childers Products, Division of ITW; CP-76.
   b. Foster Products Corporation, H. B. Fuller Company; 30-45.
   c. Marathon Industries, Inc.; 405.
   d. Mon-Eco Industries, Inc.; 44-05.

B. ASJ Flashing Sealants, and Vinyl, PVDC, and PVC Jacket Flashing Sealants:

1. Products: Subject to compliance with requirements, provide one of the following:
   a. Childers Products, Division of ITW; CP-76.
2. Materials shall be compatible with insulation materials, jackets, and substrates.
3. Fire- and water-resistant, flexible, elastomeric sealant.
4. Service Temperature Range: Minus 40 to plus 250 deg F.
5. Color: White.
6. For indoor applications, use sealants that have a VOC content of 250 g/L or less when calculated according to 40 CFR 59, Subpart D (EPA Method 24).

2.6 FACTORY-APPLIED JACKETS

A. Insulation system schedules indicate factory-applied jackets on various applications. When factory-applied jackets are indicated, comply with the following:

1. ASJ: White, kraft-paper, fiberglass-reinforced scrim with aluminum-foil backing; complying with ASTM C 1136, Type I.

2. ASJ-SSL: ASJ with self-sealing, pressure-sensitive, acrylic-based adhesive covered by a removable protective strip; complying with ASTM C 1136, Type I.
3. FSK Jacket: Aluminum-foil, fiberglass-reinforced scrim with kraft-paper backing;

   complying with ASTM C 1136, Type II.
4. PVDC Jacket for Indoor Applications: 4-mil- thick, white PVDC biaxially oriented barrier film with a permeance at 0.02 perms when tested according to ASTM E 96 and with a flame-spread index of 5 and a smoke-developed index of 20 when tested according to ASTM E 84.
   a. Products: Subject to compliance with requirements, provide one of the following:
      1) Dow Chemical Company (The); Saran 540 Vapor Retarder Film and Saran 560 Vapor Retarder Film;
      2) 3M Pipe Insulation;
      3) Armacell LLC;
      4) Or approved equal.
5. PVDC-SSL Jacket: PVDC jacket with a self-sealing, pressure-sensitive, acrylic-based adhesive covered by a removable protective strip.
   a. Products: Subject to compliance with requirements, provide one of the following:
      1) Dow Chemical Company (The); Saran 540 Vapor Retarder Film and Saran 560 Vapor Retarder Film;
      2) 3M Pipe Insulation;
      3) Armacell LLC;
      4) Or approved equal.

2.7 FIELD-APPLIED FABRIC-REINFORCING MESH

A. Woven Polyester Fabric: Approximately 1 oz./sq. yd. with a thread count of 10 strands by 10 strands/sq. inch, in a Leno weave, for equipment and pipe.
   1. Products: Subject to compliance with requirements, provide one of the following:
      a. Foster Products Corporation, H. B. Fuller Company; Mast-A-Fab.
      b. Vimasco Corporation; Elastafab 894.

2.8 FIELD-APPLIED JACKETS

A. Field-applied jackets shall comply with ASTM C 921, Type I, unless otherwise indicated.

B. PVC Jacket: High-impact-resistant, UV-resistant PVC complying with ASTM D 1784,

   Class 16354-C; thickness as scheduled; roll stock ready for shop or field cutting and forming Thickness is indicated in field-applied jacket schedules.
   1. Products: Subject to compliance with requirements, provide one of the following:
      a. Johns Manville; Zeston.

b. P.I.C. Plastics, Inc.; FG Series.

c. Proto PVC Corporation; LoSmoke.

d. Speedline Corporation; SmokeSafe.

2. Adhesive: As recommended by jacket material manufacturer.

3. Color: White.

4. Factory-fabricated fitting covers to match jacket if available; otherwise, field fabricate.

a. Shapes: 45- and 90-degree, short- and long-radius elbows, tees, valves, flanges, unions, reducers, end caps, soil-pipe hubs, traps, mechanical joints, and P-trap and supply covers for lavatories.

2.9 TAPES

A. ASJ Tape: White vapor-retarder tape matching factory-applied jacket with acrylic adhesive, complying with ASTM C 1136.

1. Products: Subject to compliance with requirements, provide one of the following:

a. Avery Dennison Corporation, Specialty Tapes Division; Fasson 0835.

b. Compac Corp.; 104 and 105.

c. Ideal Tape Co., Inc., an American Biltrite Company; 428 AWF ASJ.

d. Venture Tape; 1540 CW Plus, 1542 CW Plus, and 1542 CW Plus/SQ.

2. Width: 3 inches.

3. Thickness: 11.5 mils.

4. Adhesion: 90 ounces force/inch in width.

5. Elongation: 2 percent.

6. Tensile Strength: 40 lbf/inch in width.

7. ASJ Tape Disks and Squares: Precut disks or squares of ASJ tape.

B. FSK Tape: Foil-face, vapor-retarder tape matching factory-applied jacket with acrylic adhesive; complying with ASTM C 1136.

1. Products: Subject to compliance with requirements, provide one of the following:

a. Avery Dennison Corporation, Specialty Tapes Division; Fasson 0827.

b. Compac Corp.; 110 and 111.

c. Ideal Tape Co., Inc., an American Biltrite Company; 491 AWF FSK.

d. Venture Tape; 1525 CW, 1528 CW, and 1528 CW/SQ.

2. Width: 3 inches.

3. Thickness: 6.5 mils.

4. Adhesion: 90 ounces force/inch in width.

5. Elongation: 2 percent.

6. Tensile Strength: 40 lbf/inch in width.

7. FSK Tape Disks and Squares: Precut disks or squares of FSK tape.

C. PVC Tape: White vapor-retarder tape matching field-applied PVC jacket with acrylic adhesive.

Suitable for indoor and outdoor applications.

1. Products: Subject to compliance with requirements, provide one of the following:
   a. Avery Dennison Corporation, Specialty Tapes Division; Fasson 0555.
   b. Compac Corp.; 130.
   c. Ideal Tape Co., Inc., an American Biltrite Company; 370 White PVC tape.
   d. Venture Tape; 1506 CW NS.
2. Width: 2 inches.
3. Thickness: 6 mils.
4. Adhesion: 64 ounces force/inch in width.
5. Elongation: 500 percent.
6. Tensile Strength: 18 lbf/inch in width.

D. PVDC Tape: White vapor-retarder PVDC tape with acrylic adhesive.

1. Products: Subject to compliance with requirements, provide one of the following:
   a. Dow Chemical Company (The); Saran 540 Vapor Retarder Tape.
   b. 3M Pipe Insulation;
   c. Armacell LLC;
   d. Or approved equal.

2. Width: 3 inches.
3. Film Thickness: 4 mils.
4. Adhesive Thickness: 1.5 mils.
5. Elongation at Break: 145 percent.
6. Tensile Strength: 55 lbf/inch in width.

PART 3 - EXECUTION

3.1 PREPARATION

A. Surface Preparation: Clean and dry surfaces to receive insulation. Remove materials that will adversely affect insulation application.

B. Coordinate insulation installation with the trade installing heat tracing. Comply with requirements for heat tracing that apply to insulation.

C. Mix insulating cements with clean potable water; if insulating cements are to be in contact with stainless-steel surfaces, use demineralized water.

3.2 GENERAL INSTALLATION REQUIREMENTS

A. Install insulation materials, accessories, and finishes with smooth, straight, and even surfaces; free of voids throughout the length of equipment and piping including fittings, valves, and specialties.

B. Install insulation materials, forms, vapor barriers or retarders, jackets, and thicknesses required for each item of equipment and pipe system as specified in insulation system schedules.

C. Install accessories compatible with insulation materials and suitable for the service. Install accessories that do not corrode, soften, or otherwise attack insulation or jacket in either wet or dry state.

D. Install insulation with longitudinal seams at top and bottom of horizontal runs.

E. Install multiple layers of insulation with longitudinal and end seams staggered.

F. Do not weld brackets, clips, or other attachment devices to piping, fittings, and specialties.

G. Keep insulation materials dry during application and finishing.

H. Install insulation with tight longitudinal seams and end joints. Bond seams and joints with adhesive recommended by insulation material manufacturer.

I. Install insulation with least number of joints practical.

J. Where vapor barrier is indicated, seal joints, seams, and penetrations in insulation at hangers, supports, anchors, and other projections with vapor-barrier mastic.

1. Install insulation continuously through hangers and around anchor attachments.

2. For insulation application where vapor barriers are indicated, extend insulation on anchor legs from point of attachment to supported item to point of attachment to structure. Taper and seal ends at attachment to structure with vapor-barrier mastic.

3. Install insert materials and install insulation to tightly join the insert. Seal insulation to insulation inserts with adhesive or sealing compound recommended by insulation material manufacturer.

4. Cover inserts with jacket material matching adjacent pipe insulation. Install shields over jacket, arranged to protect jacket from tear or puncture by hanger, support, and shield.

K. Apply adhesives, mastics, and sealants at manufacturer's recommended coverage rate and wet and dry film thicknesses.

L. Install insulation with factory-applied jackets as follows:

1. Draw jacket tight and smooth.

2. Cover circumferential joints with 3-inch- wide strips, of same material as insulation jacket. Secure strips with adhesive and outward clinching staples along both edges of strip, spaced 4 inches o.c.

3. Overlap jacket longitudinal seams at least 1-1/2 inches. Install insulation with longitudinal seams at bottom of pipe. Clean and dry surface to receive self-sealing lap. Staple laps with outward clinching staples along edge at 2 inches o.c.

a. For below ambient services, apply vapor-barrier mastic over staples.

4. Cover joints and seams with tape as recommended by insulation material

manufacturer to maintain vapor seal.

5. Where vapor barriers are indicated, apply vapor-barrier mastic on seams and joints and at ends adjacent to pipe flanges and fittings.

M. Cut insulation in a manner to avoid compressing insulation more than 75 percent of its nominal thickness.

N. Finish installation with systems at operating conditions. Repair joint separations and cracking due to thermal movement.

O. Repair damaged insulation facings by applying same facing material over damaged areas. Extend patches at least 4 inches beyond damaged areas. Adhere, staple, and seal patches similar to butt joints.

P. For above ambient services, do not install insulation to the following:

1. Vibration-control devices.
2. Testing agency labels and stamps.
3. Nameplates and data plates.
4. Manholes.
5. Handholes.
6. Cleanouts

3.3 PENETRATIONS

A. Insulation Installation at Roof Penetrations: Install insulation continuously through roof penetrations.

1. Seal penetrations with flashing sealant.
2. For applications requiring only indoor insulation, terminate insulation above roof surface and seal with joint sealant. For applications requiring indoor and outdoor insulation, install insulation for outdoor applications tightly joined to indoor insulation ends. Seal joint with joint sealant.
3. Extend jacket of outdoor insulation outside roof flashing at least 2 inches below top of roof flashing.
4. Seal jacket to roof flashing with flashing sealant.

B. Insulation Installation at Underground Exterior Wall Penetrations: Terminate insulation flush with sleeve seal. Seal terminations with flashing sealant.

C. Insulation Installation at Aboveground Exterior Wall Penetrations: Install insulation continuously through wall penetrations.

1. Seal penetrations with flashing sealant.
2. For applications requiring only indoor insulation, terminate insulation inside wall surface and seal with joint sealant. For applications requiring indoor and outdoor insulation, install insulation for outdoor applications tightly joined to indoor insulation ends. Seal joint with joint sealant.
3. Extend jacket of outdoor insulation outside wall flashing and overlap wall flashing at least 2 inches.
4. Seal jacket to wall flashing with flashing sealant.

D. Insulation Installation at Interior Wall and Partition Penetrations (That Are Not Fire Rated): Install insulation continuously through walls and partitions.

E. Insulation Installation at Fire-Rated Wall and Partition Penetrations: Install insulation continuously through penetrations of fire-rated walls and partitions.

1. Comply with requirements in Division 07 Section "Penetration Firestopping" and fire-resistive joint sealers.

F. Insulation Installation at Floor Penetrations:

1. Pipe: Install insulation continuously through floor penetrations.

2. Seal penetrations through fire-rated assemblies. Comply with requirements in Division 07 Section "Penetration Firestopping."

3.4 GENERAL PIPE INSULATION INSTALLATION

A. Requirements in this article generally apply to all insulation materials except where more specific requirements are specified in various pipe insulation material installation articles.

B. Insulation Installation on Fittings, Valves, Strainers, Flanges, and Unions:

1. Install Insulation over fittings, valves, strainers, flanges, unions, and other specialties with continuous thermal and vapor-retarder integrity, unless otherwise indicated.

2. Insulate pipe elbows using preformed fitting insulation or mitered fittings made from same material and density as adjacent pipe insulation. Each piece shall be butted tightly against adjoining piece and bonded with adhesive. Fill joints, seams, voids, and irregular surfaces with insulating cement finished to a smooth, hard, and uniform contour that is uniform with adjoining pipe insulation.

3. Insulate tee fittings with preformed fitting insulation or sectional pipe insulation of same material and thickness as used for adjacent pipe. Cut sectional pipe insulation to fit. Butt each section closely to the next and hold in place with tie wire. Bond pieces with adhesive.

4. Insulate valves using preformed fitting insulation or sectional pipe insulation of same material, density, and thickness as used for adjacent pipe. Overlap adjoining pipe insulation by not less than two times the thickness of pipe insulation, or one pipe diameter, whichever is thicker. For valves, insulate up to and including the bonnets, valve stuffing-box studs, bolts, and nuts. Fill joints, seams, and irregular surfaces with insulating cement.

5. Insulate strainers using preformed fitting insulation or sectional pipe insulation of same material, density, and thickness as used for adjacent pipe. Overlap adjoining pipe insulation by not less than two times the thickness of pipe insulation, or one pipe diameter, whichever is thicker. Fill joints, seams, and irregular surfaces with insulating cement. Insulate strainers so strainer basket flange or plug can be easily removed and replaced without damaging the insulation and jacket. Provide a removable reusable insulation cover. For below ambient services, provide a design that maintains vapor barrier.

6. Insulate flanges and unions using a section of oversized preformed pipe insulation.

Overlap adjoining pipe insulation by not less than two times the thickness of pipe

insulation, or one pipe diameter, whichever is thicker.

7. Cover segmented insulated surfaces with a layer of finishing cement and coat with a mastic. Install vapor-barrier mastic for below ambient services and a breather mastic for above ambient services. Reinforce the mastic with fabric-reinforcing mesh. Trowel the mastic to a smooth and well-shaped contour.

8. For services not specified to receive a field-applied jacket except for flexible elastomeric and polyolefin, install fitted PVC cover over elbows, tees, strainers, valves, flanges, and unions. Terminate ends with PVC end caps. Tape PVC covers to adjoining insulation facing using PVC tape.

9. Stencil or label the outside insulation jacket of each union with the word "UNION." Match size and color of pipe labels.

C. Insulate instrument connections for thermometers, pressure gages, pressure temperature taps, test connections, flow meters, sensors, switches, and transmitters on insulated pipes, vessels, and equipment. Shape insulation at these connections by tapering it to and around the connection with insulating cement and finish with finishing cement, mastic, and flashing sealant.

D. Install removable insulation covers at locations indicated. Installation shall conform to the following:

1. Make removable flange and union insulation from sectional pipe insulation of same thickness as that on adjoining pipe. Install same insulation jacket as adjoining pipe insulation.

2. When flange and union covers are made from sectional pipe insulation, extend insulation from flanges or union long at least two times the insulation thickness over adjacent pipe insulation on each side of flange or union. Secure flange cover in place with stainless steel or aluminum bands. Select band material compatible with insulation and jacket.

3. Construct removable valve insulation covers in same manner as for flanges except divide the two-part section on the vertical center line of valve body

4. When covers are made from block insulation, make two halves, each consisting of mitered blocks wired to stainless-steel fabric. Secure this wire frame, with its attached insulation, to flanges with tie wire. Extend insulation at least 2 inches over adjacent pipe insulation on each side of valve. Fill space between flange or union cover and pipe insulation with insulating cement. Finish cover assembly with insulating cement applied in two coats. After first coat is dry, apply and trowel second coat to a smooth finish.

5. Unless a PVC jacket is indicated in field-applied jacket schedules, finish exposed surfaces with a metal jacket.

3.5 FLEXIBLE ELASTOMERIC INSULATION INSTALLATION

A. Seal longitudinal seams and end joints with manufacturer's recommended adhesive to eliminate openings in insulation that allow passage of air to surface being insulated.

B. Insulation Installation on Pipe Flanges:

1. Install pipe insulation to outer diameter of pipe flange.

2. Make width of insulation section same as overall width of flange and bolts, plus twice the thickness of pipe insulation.

3. Fill voids between inner circumference of flange insulation and outer circumference of adjacent straight pipe segments with cut sections of sheet insulation of same thickness as pipe insulation.

4. Secure insulation to flanges and seal seams with manufacturer's recommended adhesive to eliminate openings in insulation that allow passage of air to surface being insulated.

C. Insulation Installation on Pipe Fittings and Elbows:

1. Install mitered sections of pipe insulation.

2. Secure insulation materials and seal seams with manufacturer's recommended adhesive to eliminate openings in insulation that allow passage of air to surface being insulated.

D. Insulation Installation on Valves and Pipe Specialties:

1. Install preformed valve covers manufactured of same material as pipe insulation when available.

2. When preformed valve covers are not available, install cut sections of pipe and sheet insulation to valve body. Arrange insulation to permit access to packing and to allow valve operation without disturbing insulation.

3. Install insulation to flanges as specified for flange insulation application.

4. Secure insulation to valves and specialties and seal seams with manufacturer's

recommended adhesive to eliminate openings in insulation that allow passage of air to surface being insulated.

3.6 MINERAL-FIBER INSULATION INSTALLATION

A. Insulation Installation on Straight Pipes and Tubes:

1. Secure each layer of preformed pipe insulation to pipe with wire or bands and tighten bands without deforming insulation materials.

2. Where vapor barriers are indicated, seal longitudinal seams, end joints, and protrusions with vapor-barrier mastic and joint sealant.

3. For insulation with factory-applied jackets on above ambient surfaces, secure laps with outward clinched staples at 6 inches o.c.

4. For insulation with factory-applied jackets on below ambient surfaces, do not staple longitudinal tabs but secure tabs with additional adhesive as recommended by insulation material manufacturer and seal with vapor-barrier mastic and flashing sealant.

B. Insulation Installation on Pipe Flanges:

1. Install preformed pipe insulation to outer diameter of pipe flange.

2. Make width of insulation section same as overall width of flange and bolts, plus twice the thickness of pipe insulation.

3. Fill voids between inner circumference of flange insulation and outer circumference of adjacent straight pipe segments with mineral-fiber blanket insulation.

4. Install jacket material with manufacturer's recommended adhesive, overlap seams at least 1 inch, and seal joints with flashing sealant.

C. Insulation Installation on Pipe Fittings and Elbows:

1. Install preformed sections of same material as straight segments of pipe insulation when available.

2. When preformed insulation elbows and fittings are not available, install mitered sections of pipe insulation, to a thickness equal to adjoining pipe insulation. Secure insulation materials with wire or bands.

D. Insulation Installation on Valves and Pipe Specialties:

1. Install preformed sections of same material as straight segments of pipe insulation when available.

2. When preformed sections are not available, install mitered sections of pipe insulation to valve body.

3. Arrange insulation to permit access to packing and to allow valve operation without disturbing insulation.

4. Install insulation to flanges as specified for flange insulation application.

3.7 POLYOLEFIN INSULATION INSTALLATION

A. Insulation Installation on Straight Pipes and Tubes:

1. Seal split-tube longitudinal seams and end joints with manufacturer's recommended adhesive to eliminate openings in insulation that allow passage of air to surface being insulated.

B. Insulation Installation on Pipe Flanges:

1. Install pipe insulation to outer diameter of pipe flange.

2. Make width of insulation section same as overall width of flange and bolts, plus twice the thickness of pipe insulation.

3. Fill voids between inner circumference of flange insulation and outer circumference of adjacent straight pipe segments with cut sections of polyolefin sheet insulation of same thickness as pipe insulation.

4. Secure insulation to flanges and seal seams with manufacturer's recommended adhesive to eliminate openings in insulation that allow passage of air to surface being insulated.

C. Insulation Installation on Pipe Fittings and Elbows:

1. Install mitered sections of polyolefin pipe insulation.

2. Secure insulation materials and seal seams with manufacturer's recommended adhesive to eliminate openings in insulation that allow passage of air to surface being insulated.

D. Insulation Installation on Valves and Pipe Specialties:

1. Install cut sections of polyolefin pipe and sheet insulation to valve body.

2. Arrange insulation to permit access to packing and to allow valve operation without disturbing insulation.

3. Install insulation to flanges as specified for flange insulation application.

4. Secure insulation to valves and specialties, and seal seams with manufacturer's

recommended adhesive to eliminate openings in insulation that allow passage of air to surface being insulated.

3.8 FIELD-APPLIED JACKET INSTALLATION

A. Where FSK jackets are indicated, install as follows:

1. Draw jacket material smooth and tight.
2. Install lap or joint strips with same material as jacket.
3. Secure jacket to insulation with manufacturer's recommended adhesive.
4. Install jacket with 1-1/2-inch laps at longitudinal seams and 3-inch- wide joint strips at end joints.
5. Seal openings, punctures, and breaks in vapor-retarder jackets and exposed insulation with vapor-barrier mastic.

B. Where PVC jackets are indicated, install with 1-inch overlap at longitudinal seams and end joints; for horizontal applications, install with longitudinal seams along top and bottom of tanks and vessels. Seal with manufacturer's recommended adhesive.

1. Apply two continuous beads of adhesive to seams and joints, one bead under lap and the finish bead along seam and joint edge.

C. Where metal jackets are indicated, install with 2-inch overlap at longitudinal seams and end joints. Overlap longitudinal seams arranged to shed water. Seal end joints with weatherproof sealant recommended by insulation manufacturer. Secure jacket with stainless-steel bands 12 inches o.c. and at end joints.

D. Where PVDC jackets are indicated, install as follows:

1. Apply three separate wraps of filament tape per insulation section to secure pipe insulation to pipe prior to installation of PVDC jacket.
2. Wrap factory-presized jackets around individual pipe insulation sections with one end overlapping the previously installed sheet. Install presized jacket with an approximate overlap at butt joint of 2 inches over the previous section. Adhere lap seal using adhesive or SSL, and then apply 1-1/4 circumferences of appropriate PVDC tape around overlapped butt joint.
3. Continuous jacket can be spiral wrapped around a length of pipe insulation. Apply

   adhesive or PVDC tape at overlapped spiral edge. When electing to use adhesives, refer to manufacturer's written instructions for application of adhesives along this spiral edge to maintain a permanent bond.
4. Jacket can be wrapped in cigarette fashion along length of roll for insulation systems with an outer circumference of 33-1/2 inches or less. The 33-1/2-inch-circumference limit allows for 2-inch- overlap seal. Using the length of roll allows for longer sections of jacket to be installed at one time. Use adhesive on the lap seal. Visually inspect lap seal for "fishmouthing," and use PVDC tape along lap seal to secure joint.
5. Repair holes or tears in PVDC jacket by placing PVDC tape over the hole or tear and wrapping a minimum of 1-1/4 circumferences to avoid damage to tape edges.

3.9 FINISHES

A. Equipment and Pipe Insulation with ASJ or Other Paintable Jacket Material: Paint jacket

with paint system identified below and as specified in Division 09 painting Sections.

1. Flat Acrylic Finish: Two finish coats over a primer that is compatible with jacket material and finish coat paint. Add fungicidal agent to render fabric mildew proof.

    a. Finish Coat Material: Interior, flat, latex-emulsion size.

B. Flexible Elastomeric Thermal Insulation: After adhesive has fully cured, apply two coats of insulation manufacturer's recommended protective coating.

C. Color: Final color as selected by Engineer. Vary first and second coats to allow visual inspection of the completed Work.

D. Do not field paint aluminum or stainless-steel jackets.

3.10 FIELD QUALITY CONTROL

A. Perform tests and inspections.

B. Tests and Inspections:

1. Inspect pipe, fittings, strainers, and valves, randomly selected by Engineer, by removing field-applied jacket and insulation in layers in reverse order of their installation. Extent of inspection shall be limited to three locations of straight pipe, three locations of threaded fittings, three locations of welded fittings, two locations of threaded strainers, locations of welded strainers, locations of threaded valves, and locations of flanged valves for each pipe service defined in the "Piping Insulation Schedule, General" Article.

C. All insulation applications will be considered defective Work if sample inspection reveals noncompliance with requirements.

3.11 PIPING INSULATION SCHEDULE, GENERAL

A. Acceptable preformed pipe and tubular insulation materials and thicknesses are identified for each piping system and pipe size range. If more than one material is listed for a piping system, selection from materials listed is Contractor's option.

B. Items Not Insulated: Unless otherwise indicated, do not install insulation on the following:

1. Drainage piping located in crawl spaces.

2. Underground piping.

3. Chrome-plated pipes and fittings unless there is a potential for personnel injury.

3.12 INDOOR PIPING INSULATION SCHEDULE

A. Domestic Cold and Non-potable Cold Water: Insulation shall be one of the following:

1. Flexible Elastomeric: 1/2 inch thick for pipe sizes less than 1-1/2 inches, 1 inch thick for pipe sizes 2 inches and greater

2. Mineral-Fiber, Preformed Pipe Insulation, Type I: 1/2 inch thick for pipe sizes less than 1- 1/2 inches, 1 inch thick for pipe sizes 2 inches and greater

3. Polyolefin: 1/2 inch thick for pipe sizes less than 1-1/2 inches, 1 inch thick for pipe sizes 2 inches and greater

B. Domestic Hot, and Re-circulated Hot Water and Tempered Water: Insulation shall be one of the following:

1. Flexible Elastomeric: 1 inch thick.
2. Mineral-Fiber, Preformed Pipe Insulation, Type I: 1 inch thick.
3. Polyolefin: 1 inch thick.

C. Horizontal Stormwater and Emergency Drain: Insulation shall be one of the following:

1. Flexible Elastomeric: 1 inch thick.
2. Mineral-Fiber, Preformed Pipe Insulation, Type I: 1 inch thick.
3. Polyolefin: 1 inch thick.

D. Roof Drain and Emergency Drain Bodies: Insulation shall be one of the following:

1. Flexible Elastomeric: 1 inch thick.
2. Mineral-Fiber, Preformed Pipe Insulation, Type I: 1 inch Insert thickness thick.
3. Polyolefin: 1 inch thick.

E. Exposed Sanitary Drains, Domestic Water, Domestic Hot Water, and Stops at lavatories shall be insulated and finished with Truebro Model No. 102 "Lav-Guard" or Brocar "Trap-Wrap" white insulation kit.

F. Sanitary Waste Piping Where Heat Tracing Is Installed, insulation shall be:

1. Mineral-Fiber, Preformed Pipe Insulation, Type I: 1-1/2 inches thick.

3.13 OUTDOOR, ABOVEGROUND PIPING INSULATION SCHEDULE

A. Domestic Cold, Hot, and Recirculated Hot Water: Insulation shall be one of the following:

1. Flexible Elastomeric: 2 inches thick.
2. Mineral-Fiber, Preformed Pipe Insulation, Type I: 2 inches thick.

B. Sanitary Waste Piping Where Heat Tracing Is Installed: Insulation shall be:

1. Mineral-Fiber, Preformed Pipe Insulation, Type I: 2 inches thick.

3.14 OUTDOOR, FIELD-APPLIED JACKET SCHEDULE

A. Install jacket over insulation material. For insulation with factory-applied jacket, install the fieldapplied jacket over the factory-applied jacket.

B. If more than one material is listed, selection from materials listed is Contractor's option.

C. Piping, Exposed:

1. PVC: 20 mils thick.

D. Aluminum, Smooth or Corrugated or Stucco Embossed: 0.016 inch thick.

END OF SECTION

SECTION 22 11 16 – DOMESTIC WATER PIPING

PART 1 – GENERAL

RELATED DOCUMENTS

A. Section 22 05 17 - SLEEVS AND SLEEVE SEALS FOR PLUMBING PIPING

B. Section 22 05 18 - ESCUTCHEONS FOR PLUMBING PIPING.

C. Section 22 05 19 – MERTERS AND GAGES FOR PLUMBING PIPING.

D. Section 22 05 23 - GENERAL DUTY VALVES FOR PLUMBING PIPING

E. Section 22 05 53 – IDENTIFICATION FOR PLUMBING PIPING AND EQUIPMNET.

F. Section 22 07 19 – PLUMBING PIPING INSULATION.

G. Section 22 11 19 – DOMESTIC WATER PIPING SPECIALTIES.

1.1 SUMMARY

A. Section Includes:

1. Aboveground domestic water pipes, tubes, and fittings inside buildings.

B. Related Requirements:

1. Water Tap – 2” DIA.
2. Type K Copper Tubing – 2”
3. Wet Connection – 4”
4. Ductile Iron Cement Lined Water Pipe – 4”

1.2 SUBMITTALS

A. Product Data: Piping material, type of connections, transition fittings and dielectric fittings.

B. System purging and disinfecting activities report.

C. Field quality-control reports.

PART 2 – PRODUCTS

2.1 PIPING MATERIALS

A. Comply with requirements in "Piping Schedule" Article for applications of pipe, tube, fitting materials, and joining methods for specific services, service locations, and pipe sizes.

B. Potable-water piping and components shall comply with NSF 14 and NSF 61. Plastic piping components shall be marked with "NSF-pw."

2.01 STEEL PIPE AND FITTINGS

A. Steel Pipe for Threading: Standard weight, Schedule 40, black or galvanized; ASTM A 53 or ASTM A 135.

B. Malleable Iron, Steam Pattern Threaded Fittings:

1. 150 lb Class: ASME B16.3.
2. 300 lb Class: ASME B16.3.

C. Cast Iron Fittings:

1. Drainage Pattern, Threaded: ASME B16.12.
2. Steam Pattern, Threaded: ASME B16.4.
   a. Standard Weight: Class 125.
   b. Extra Heavy Weight: Class 250.
3. Flanged Fittings and Threaded Flanges: ASME B16.1.
   a. Standard Weight: Class 125.
   b. Extra Heavy: Class 250.

D. Unions: Malleable iron, 250 lb class, brass to iron or brass to brass seats.

E. Couplings: Same material and pressure rating as adjoining pipe, conforming to standards for fittings in such pipe. Use taper tapped threaded type in screwed pipe systems operating in excess of 15 psig.

F. Nipples: Same material and strength as adjoining pipe, except nipples having a length of less than one inch between threads shall be extra heavy.

2.2 COPPER TUBE AND FITTINGS

A. Hard Copper Tube: ASTM B 88, Type K, L and M water tube, drawn temper.

B. Cast-Copper, Solder-Joint Fittings: ASME B16.18, pressure fittings.

C. Wrought-Copper, Solder-Joint Fittings: ASME B16.22, wrought-copper pressure fittings.

D. Flared-Joint Fittings: ASME B16.26, Cast Copper Alloy Fittings for Fared Copper Tubes

E. Copper Unions:

1. MSS SP-123.
2. Cast-copper-alloy, hexagonal-stock body.
3. Ball-and-socket, metal-to-metal seating surfaces.
4. Solder-joint or threaded ends.

2.3 DUCTILE IRON PIPE AND FITTINGS

A. Water Pipe: Bitumin coated and cement-mortar lined; AWWA C151.

1. 3 and 4 Inch Sizes: Class 51.

B. Fittings: Bitumin coated and cement-mortar lined; AWWA C110.

2.4 PIPING JOINING MATERIALS

A. Solder Filler Metals: ASTM B 32, lead-free alloys.

B. Flux: ASTM B 813, water flushable.

C. Braze Filler Metal: AWS A5.8

2.5 TRANSITION FITTINGS

A. General Requirements:

1. Same size as pipes to be joined.
2. Pressure rating at least equal to pipes to be joined.
3. End connections compatible with pipes to be joined.

B. Fitting-Type Transition Couplings: Manufactured piping coupling or specified piping system fitting.

C. Sleeve-Type Transition Coupling: AWWA C219.

1. Manufacturers: Subject to compliance with requirements, provide products by the following:
   a. Cascade Waterworks Manufacturing.
   b. Dresser, Inc.; Piping Specialties Products.
   c. Ford Meter Box Company, Inc. (The).
   d. JCM Industries.
   e. Romac Industries, Inc.
   f. Smith-Blair, Inc.; a Sensus company.
   g. Viking Johnson.
   h. Or approved equal.

2.6 DIELECTRIC FITTINGS

A. General Requirements:Assembly of copper alloy and ferrous materials with separating nonconductive insulating material. Include end connections compatible with pipes to be joined.

B. Dielectric Unions:

1. Manufacturers: Subject to compliance with requirements, provide products by the following:
   a. Capitol Manufacturing Company; member of the Phoenix Forge Group.
   b. Central Plastics Company.
   c. Hart Industries International, Inc.
   d. Jomar International.
   e. Matco-Norca.
   f. McDonald, A. Y. Mfg. Co.
   g. Watts; a division of Watts Water Technologies, Inc.
   h. Wilkins; a Zurn company.
   i. Or approved equal.
2. Standard: ASSE 1079.
3. Pressure Rating: 250 psig (1725 kPa)

4. End Connections: Solder-joint copper alloy and threaded ferrous.

C. Dielectric Flanges:

1. Manufacturers: Subject to compliance with requirements, provide products by the following:

2. Approved Manufacturers: Subject to compliance with requirements, provide product indicated on Drawings or comparable product by one of the following:

a. Capitol Manufacturing Company; member of the Phoenix Forge Group.

b. Central Plastics Company.

c. Matco-Norca.

d. Watts; a division of Watts Water Technologies, Inc.

e. Wilkins; a Zurn company.

f. Or approved equal.

3. Standard: ASSE 1079.

4. Factory-fabricated, bolted, companion-flange assembly.

5. Pressure Rating: 175 psig (1200 kPa).

6. End Connections: Solder-joint copper alloy and threaded ferrous; threaded solder-joint copper alloy and threaded ferrous.

D. Dielectric-Flange Insulating Kits:

1. Manufacturers: Subject to compliance with requirements, provide products by the following:

a. Advance Products & Systems, Inc.

b. Calpico, Inc.

c. Central Plastics Company.

d. Pipeline Seal and Insulator, Inc.

e. Or approved equal.

3. Nonconducting materials for field assembly of companion flanges.

4. Pressure Rating: 150 psig (1035 kPa).

5. Gasket: Neoprene or phenolic.

6. Bolt Sleeves: Phenolic or polyethylene.

7. Washers: Phenolic with steel backing washers.

E. Dielectric Nipples:

1. Manufacturers: Subject to compliance with requirements, provide products by the following:

a. Elster Perfection Corporation.

b. Grinnell Mechanical Products; Tyco Fire Products LP.

c. Matco-Norca.

d. Precision Plumbing Products, Inc.

e. Victaulic Company.

f. Or approved equal.

3. Standard: IAPMO PS 66.

4. Electroplated steel nipple complying with ASTM F 1545.

5. Pressure Rating and Temperature: 300 psig at 225 deg F.

6. End Connections: Male threaded or grooved.

7. Lining: Inert and noncorrosive, propylene.

PART 3 - EXECUTION

3.1 PIPING INSTALLATION

A. Drawing plans, schematics, and diagrams indicate general location and arrangement of domestic water piping. Indicated locations and arrangements are used to size pipe and calculate friction loss, expansion, and other design considerations. Install piping as indicated unless deviations to layout are approved on coordination drawings.

B. Install copper tubing under building slab according to CDA's "Copper Tube Handbook."

C. Install shutoff valve, hose-end drain valve, strainer, pressure gage, and test tee with valve inside the building at each domestic water-service entrance. Comply with requirements for pressure gages in Section 220519 "Meters and Gages for Plumbing Piping" and with requirements for drain valves and strainers in Section 221119 "Domestic Water Piping Specialties."

D. Install shutoff valve immediately upstream of each dielectric fitting.

E. Install water-pressure-reducing valves downstream from shutoff valves. Comply with requirements for pressure-reducing valves in Section 22 11 19 "Domestic Water Piping Specialties."

F. Install domestic water piping level without pitch and plumb.

G. Rough-in domestic water piping for water-meter installation according to utility company's requirements.

H. Install piping concealed from view and protected from physical contact by building occupants unless otherwise indicated and except in equipment rooms and service areas.

I. Install piping indicated to be exposed and piping in equipment rooms and service areas at right angles or parallel to building walls. Diagonal runs are prohibited unless specifically indicated otherwise.

J. Install piping above accessible ceilings to allow sufficient space for ceiling panel removal, and coordinate with other services occupying that space.

K. Install piping to permit valve servicing.

L. Install nipples, unions, special fittings, and valves with pressure ratings the same as or higher than the system pressure rating used in applications below unless otherwise indicated.

M. Install piping free of sags and bends.

N. Install fittings for changes in direction and branch connections.

O. Install unions in copper tubing at final connection to each piece of equipment, machine, and specialty.

P. Install pressure gages on suction and discharge piping for each plumbing pump and packaged booster pump. Comply with requirements for pressure gages in Section 220519 "Meters and Gages for Plumbing Piping."

Q. Install thermometers on inlet and outlet piping from each water heater. Comply with requirements for thermometers in Section 220519 "Meters and Gages for Plumbing Piping."

R. Install sleeves for piping penetrations of walls, ceilings, and floors. Comply with requirements for sleeves specified in Section 220517 "Sleeves and Sleeve Seals for Plumbing Piping."

S. Install sleeve seals for piping penetrations of concrete walls and slabs. Comply with requirements for sleeve seals specified in Section 220517 "Sleeves and Sleeve Seals for Plumbing Piping."

T. Install escutcheons for piping penetrations of walls, ceilings, and floors. Comply with requirements for escutcheons specified in Section 220518 "Escutcheons for Plumbing Piping."

3.3 JOINT CONSTRUCTION

A. Ream ends of pipes and tubes and remove burrs. Bevel plain ends of steel pipe.

B. Remove scale, slag, dirt, and debris from inside and outside of pipes, tubes, and fittings before assembly.

C. Brazed Joints: All joint surface shall be cleaned. An approved flux shall be applied where required. The joint shall be brazed with a filter metal conforming to AWS A5.8.

D. Soldered Joints: Solder joints shall be made in accordance with the methods of ASTM B 828. All cut tube ends shall be reamed to the full inside diameter of the tube end. All joints surface shall be cleaned. A flux conforming to ASTM B 813 shall be applied. The joint shall be soldered with a solder conforming to ASTM B 32. The joining of water supply piping shall made with lead-free solders and flux. ”Lead-free” shall mean a chemical composition equal to or less than 0.2 percent lead.

E. Mechanical joints: Mechanical joints for copper shall be installed in accordance with the manufacturer’s instructions and shall be tested, designed and evaluated in accordance with IAPMO PS ICCES, ICC-ES PMG LC and ASSE 1061

F. Flared Joints: Flared joints for water pipe shall be made by a tool designed for that operation. Join copper tube and pressure-seal fittings with tools recommended by fitting manufacturer.

G. Joints for Dissimilar-Material Piping: Make joints using adapters compatible with materials of both piping systems.

H. Join copper tube and fittings according to ASTM B 828 or CDA's "Copper Tube Handbook."

3.4 TRANSITION FITTING INSTALLATION

A. Install transition couplings at joints of dissimilar piping.

B. Transition Fittings in Underground Domestic Water Piping:

1. Fittings for NPS 1-1/2 and Smaller: Fitting-type coupling.
2. Fittings for NPS 2 and Larger: Sleeve-type coupling.

C. Transition Fittings in Aboveground Domestic Water Piping NPS 2 and Smaller.

3.5 DIELECTRIC FITTING INSTALLATION

A. Install dielectric fittings in piping at connections of dissimilar metal piping and tubing.

B. Dielectric Fittings for NPS 2 and Smaller: Use dielectric couplings.

C. Dielectric Fittings for NPS 2-1/2 to NPS 4: Use dielectric nipples.

D. Dielectric Fittings for NPS 5 and Larger: Use dielectric flange kits.

3.6 HANGER AND SUPPORT INSTALLATION

A. Comply with requirements for pipe hanger, support products, and installation in Section 220529 "Hangers and Supports for Plumbing Piping and Equipment."

1. Vertical Piping: MSS Type 8 or 42, clamps.
2. Individual, Straight, Horizontal Piping Runs:
   a. 100 Feet and Less: MSS Type 1, adjustable, steel clevis hangers.
   b. Longer Than 100 Feet: MSS Type 43, adjustable roller hangers.
   c. Longer than 100 Feet if indicated: MSS Type 49, spring cushion rolls.
3. Multiple, Straight, Horizontal Piping Runs 100 Feet or Longer: MSS Type 44, pipe rolls. Support pipe rolls on trapeze.
4. Base of Vertical Piping: MSS Type 52, spring hangers.

B. Support vertical piping and tubing at base and at each floor.

C. Rod diameter may be reduced one size for double-rod hangers, to a minimum of 3/8 inch.

D. Install hangers for copper tubing with the following maximum horizontal spacing and minimum rod diameters:

1. NPS 3/4 and smaller: 60 inches with 3/8-inch rod.
2. NPS 1 and NPS 1-1/4 : 72 inches with 3/8-inch rod.
3. NPS 1-1/2 and NPS 2: 96 inches with 3/8-inch rod.
4. NPS 2-1/2: 108 inches with 1/2-inch rod.
5. NPS 3 to NPS 5: 10 feet with 1/2-inch rod.
6. NPS 6: 10 feet with 5/8-inch rod.
7. NPS 8: 10 feet with 3/4-inch rod.

E. Install supports for vertical copper tubing every 10 feet.

F. Install supports for vertical steel piping every 15 feet.

3.7 CONNECTIONS

A. Drawings indicate general arrangement of piping, fittings, and specialties.

B. When installing piping adjacent to equipment and machines, allow space for service and maintenance.

C. Connect domestic water piping to exterior water-service piping. Use transition fitting to join dissimilar piping materials.

D. Connect domestic water piping to water-service piping with shutoff valve; extend and connect to the following:

1. Domestic Water Booster Pumps: Cold-water suction and discharge piping.

2. Water Heaters: Cold-water inlet and hot-water outlet piping in sizes indicated, but not smaller than sizes of water heater connections.

3. Plumbing Fixtures: Cold- and hot-water-supply piping in sizes indicated, but not smaller than that required by plumbing code.

4. Equipment: Cold- and hot-water-supply piping as indicated, but not smaller than equipment connections. Provide shutoff valve and union for each connection. Use flanges instead of unions for NPS 2-1/2 and larger.

3.8 IDENTIFICATION

A. Identify system components. Comply with requirements for identification materials and installation in Section 220553 "Identification for Plumbing Piping and Equipment."

B. Label pressure piping with system operating pressure.

3.9 FIELD QUALITY CONTROL

A. Perform the following tests and inspections:

1. Piping Inspections:

a. Do not enclose, cover, or put piping into operation until it has been inspected and approved by authorities having jurisdiction.

b. During installation, notify the Engineer at least one day before inspection must be made. Perform tests specified below in presence of authorities having jurisdiction:

1) Roughing-in Inspection: Arrange for inspection of piping before concealing or closing in after roughing in and before setting fixtures.

2) Final Inspection: Arrange for the Engineer to observe tests specified in "Piping Tests" Subparagraph below and to ensure compliance with requirements.

c. Reinspection: If the Engineer finds that piping will not pass tests or inspections, make required corrections and arrange for reinspection.

d. Reports: Prepare inspection reports and have them signed by the Engineer.

2. Piping Tests:

   a. Fill domestic water piping. Check components to determine that they are not air bound and that piping is full of water.

   b. Test for leaks and defects in new piping and parts of existing piping that have been altered, extended, or repaired. If testing is performed in segments, submit a separate report for each test, complete with diagram of portion of piping tested.

   c. Leave new, altered, extended, or replaced domestic water piping uncovered and unconcealed until it has been tested and approved. Expose work that was covered

      or concealed before it was tested.

   d. Cap and subject piping to static water pressure of 50 psig above operating pressure, without exceeding pressure rating of piping system materials. Isolate test source and allow it to stand for four hours. Leaks and loss in test pressure constitute defects that must be repaired.

   e. Repair leaks and defects with new materials, and retest piping or portion thereof until satisfactory results are obtained.

   f. Prepare reports for tests and for corrective action required.

B. Domestic water piping will be considered defective if it does not pass tests and inspections.

C. Prepare test and inspection reports.

3.10 ADJUSTING

A. Perform the following adjustments before operation:

1. Close drain valves, hydrants, and hose bibbs.
2. Open shutoff valves to fully open position.
3. Open throttling valves to proper setting.
4. Adjust balancing valves in hot-water-circulation return piping to provide adequate flow.

   a. Manually adjust ball-type balancing valves in hot-water-circulation return piping to provide hot-water flow in each branch.

   b. Adjust calibrated balancing valves to flows indicated.

5. Remove plugs used during testing of piping and for temporary sealing of piping during installation.
6. Remove and clean strainer screens. Close drain valves and replace drain plugs.
7. Remove filter cartridges from housings and verify that cartridges are as specified for application where used and are clean and ready for use.
8. Check plumbing specialties and verify proper settings, adjustments, and operation.

3.11 CLEANING

A. Clean and disinfect potable domestic water piping as follows:

1. Purge new piping and parts of existing piping that have been altered, extended, or repaired before using.

2. Use purging and disinfecting procedures prescribed by authorities having jurisdiction; if methods are not prescribed, use procedures described in either AWWA C651 or AWWA C652 or follow procedures described below:

a. Flush piping system with clean, potable water until dirty water does not appear at outlets.

b. Fill and isolate system according to either of the following:

1) Fill system or part thereof with water/chlorine solution with at least 50 ppm of chlorine. Isolate with valves and allow to stand for 24 hours.

2) Fill system or part thereof with water/chlorine solution with at least 200 ppm of chlorine. Isolate and allow to stand for three hours.

c. Flush system with clean, potable water until no chlorine is in water coming from system after the standing time.

d. Repeat procedures if biological examination shows contamination.

e. Submit water samples in sterile bottles to authorities having jurisdiction.

B. Clean non-potable domestic water piping as follows:

1. Purge new piping and parts of existing piping that have been altered, extended, or repaired before using.

2. Use purging procedures prescribed by authorities having jurisdiction or; if methods are not prescribed, follow procedures described below:

a. Flush piping system with clean, potable water until dirty water does not appear at outlets.

b. Submit water samples in sterile bottles to authorities having jurisdiction. Repeat procedures if biological examination shows contamination.

C. Prepare and submit reports of purging and disinfecting activities. Include copies of water- sample approvals from authorities having jurisdiction.

D. Clean interior of domestic water piping system. Remove dirt and debris as work progresses.

3.12 PIPING SCHEDULE

A. Transition and special fittings with pressure ratings at least equal to piping rating may be used in applications below unless otherwise indicated.

B. Flanges and unions may be used for aboveground piping joints unless otherwise indicated.

C. Fitting Option: Extruded-tee connections, 95/5 Lead Free Soldered Joints and brazed joints may be used on aboveground copper tubing.

D. Under-building-slab, domestic water, building-service piping, NPS 3 and smaller, shall be one of the following:

1. Soft copper tube, ASTM B 88, Type K wrought-copper, solder-joint fittings and brazed joints or 95/5 Lead Free Soldered Joints.

E. Under-building-slab, domestic water, building-service piping, NPS 4 and larger, shall be one of the following:

1. Ductile Iron cement lined water pipe

E. Aboveground domestic water piping, NPS 2 and smaller, shall be one of the following:

1. Hard copper tube, ASTM B 88, Type K cast- or wrought-copper, solder-joint fittings; and brazed joints or 95/5 Lead Free Soldered Joints.

F. Aboveground domestic water piping, NPS 2-1/2 to NPS 4, shall be one of the following:

1. Hard copper tube, ASTM B 88, Type K; cast or wrought copper, solder-joint fittings; and brazed joints or 95/5 Lead Free Soldered Joints.

G. Aboveground not potable water piping, NPS 4 shall be one of the following:

1. Steel Pipe for Threading: Standard weight, Schedule 40, black or galvanized; ASTM A 53 or ASTM A 135.

END OF SECTION

SECTION 22 11 19 – DOMESTIC WATER PIPING SPECIALTIES

PART 1 - GENERAL

1.1 SUMMARY

A. Section Includes:

1. Backflow preventers.
2. Strainers.
3. Hose bibbs.
4. Wall hydrants.
5. Drain valves.
6. Water-hammer arresters.
7. Flexible connectors.
8. Water meters
9. Domestic Booster Pump.

B. Related Requirements:

1. Section 22 05 19 "Meters and Gages for Plumbing Piping" for thermometers, pressure gages, and flow meters in domestic water piping.
2. Section 22 11 16 "Domestic Water Piping" for water meters.
3. Comply with requirements for ground equipment in Section 260526 "Grounding and Bonding for Electrical Systems."

1.2 SUBMITTALS

A. Product Data: For each type of product.

B. Shop Drawings: For domestic water piping specialties.

1. Include diagrams for power, signal, and control wiring.

C. Field quality-control reports.

D. Operation and Maintenance Data: For domestic water piping specialties to include in emergency, operation, and maintenance manuals.

PART 2 - PRODUCTS

2.1 GENERAL REQUIREMENTS FOR PIPING SPECIALTIES

A. Potable-water piping and components shall comply with NSF 61 and NSF 14

2.2 PERFORMANCE REQUIREMENTS

A. Minimum Working Pressure for Domestic Water Piping Specialties: 200 psig unless otherwise indicated.

2.3 BACKFLOW PREVENTERS

A. Double Check Valves:

1. Double Check Valves 2" DIA and Smaller: The double check valve shall consist of two (2) independently operated, center guided, lead free, spring loaded check valves. The double check valves shall be Model No. 950XLT2, manufactured by Wilkins, Paso Robles, CA, or Model No. LF850 manufactured by FEBCO, Fresno, CA, or approved equal.
2. Double Check Valve 4" DIA.:
    a. Double check valve 4" DIA should be lead free ductile iron double check valve assembly, epoxy coated using ArmorTrek Technology, OS&Y shutoffs.
    b. Acceptable Manufacturers:
        1. FEBCO; a division of Watts Water Technologies, Inc.
        2. Conbraco Industries, Inc.
        3. Watts; a division of Watts Water Technologies, Inc.
        4. Zurn Industries, LLC, Plumbing Products Group;
        5. Wilkens Water Control
        6. Honeywell International, Inc,.
        7. or approved equal.

B. Reduced-Pressure-Principle Backflow Preventers:

1. The Reduced Pressure Zone Backflow Prevention Device shall consist of two independently operating check valves and one hydraulically dependent differential relief valve. Check valve and relief valve components shall be constructed so they may be serviced without removing the valve body from the line.
2. All RPZ's shall be furnished and installed complete with resilient seated shut off valves and test cocks. The assembly shall meet the requirements of ASSE Standard 1013 and AWWA Standard Code 506-78 and shall be lead free in compliance with the amended Federal Law (SDWA).
3. The 2” RPZs and smaller shall be manufactured by Febco model LF825YA, Wilkins, Watts or approved equal.
4. The 3” RPZs and larger shall be manufactured by Febco model LF860 Wilkins, Watts or approved equal. The RPZ shall be installed as shown on the Approved Drawings.

EFFECTIVE JAN. 4TH, 2014, ALL PROPOSED INSTALLATIONS/ REPAIR OF BACK FLOW PREVENTER (BFP) DEVICES AND ALL ASSOCIATED VALVES TO BE UTILIZED ON ALL DOMESTIC DRINKING WATER SERVICES FOR HUMAN CONSUMPTION, MUST BE LEAD-FREE IN COMPLIANCE WITH THE AMENDED FEDERAL LAW, SAFE DRINKING WATER ACT (SDWA).

Note: If the Contractor installs equipment Other than that approved by the Cross Connection Control Unit of DEP, it will be the Contractors responsibility to refile and obtain the required approvals at his/her own expense and at no additional cost to the City.

2.4 STRAINERS FOR DOMESTIC WATER PIPING

A. Y-Pattern Strainers:

1. Pressure Rating: 125 psig minimum unless otherwise indicated.
2. Body: Bronze for NPS 2 and smaller; cast iron with interior lining that complies with AWWA C550 or that is FDA approved, epoxy coated and for NPS 2-1/2 and larger.
3. End Connections: Threaded for NPS 2 and smaller; flanged for NPS 2-1/2 and larger.
4. Screen: Stainless steel with round perforations unless otherwise indicated.
5. Perforation Size:
   a. Strainers NPS 2 and Smaller: 0.062 inch .
   b. Strainers NPS 2-1/2 to NPS 4 : 0.125 inch .
   c. Strainers NPS 5 and Larger: 0.25 inch .
6. Drain: Factory-installed, hose-end drain valve.

2.5 HOSE BIBBS

A. Hose Bibbs:

1. Standard: ASME A112.18.1 for sediment faucets.
2. Body Material: Bronze.
3. Seat: Bronze, replaceable.
4. Supply Connections: NPS 1/2 or NPS 3/4 threaded or solder-joint inlet.
5. Outlet Connection: Garden-hose thread complying with ASME B1.20.7.
6. Pressure Rating: 125 psig.
7. Vacuum Breaker: Integral nonremovable, drainable, hose-connection vacuum breaker complying with ASSE 1011.
8. Finish for Equipment Rooms: Rough bronze, or chrome or nickel plated.
9. Finish for Service Areas: Rough bronze.
10. Finish for Finished Rooms: Chrome or nickel plated.
11. Operation for Equipment Rooms: Wheel handle or operating key.
12. Operation for Service Areas: Operating key.
13. Operation for Finished Rooms: Operating key.
14. Include operating key with each operating-key hose bibbs.
15. Include integral wall flange with each chrome- or nickel-plated hose bibb.

2.6 WALL HYDRANTS

A. Nonfreeze Wall Hydrants:

1. Manufacturers: Subject to compliance with requirements, provide products by the following:
   a. Josam Company.
   b. MIFAB, Inc.

c. Prier Products, Inc.

d. Smith, Jay R. Mfg. Co.; Division of Smith Industries, Inc.

e. Tyler Pipe; Wade Div.

f. Watts Drainage Products.

g. Woodford Manufacturing Company; a division of WCM Industries, Inc.

h. Zurn Industries, LLC; Plumbing Products Group; Light Commercial Products.

i. Zurn Industries, LLC; Plumbing Products Group; Specification Drainage Products.

j. Or approved equal.

2. Standard: ASME A112.21.3M for concealed-outlet, self-draining wall hydrants.

3. Pressure Rating: 125 psig (860 kPa).

4. Operation: Loose key.

5. Casing and Operating Rod: Of length required to match wall thickness. Include wall clamp.

6. Inlet: NPS 3/4 or NPS 1 (DN 20 or DN 25).

7. Outlet: Concealed, with integral vacuum breaker and garden-hose thread complying with ASME B1.20.7.

8. Box: Deep, flush mounted with cover.

9. Box and Cover Finish: Polished nickel bronze.

10. Outlet: Exposed, with integral vacuum breaker and garden-hose thread complying with ASME B1.20.7.

11. Nozzle and Wall-Plate Finish: Polished nickel bronze.

12. Operating Keys(s): One with each wall hydrant.

2.7 DRAIN VALVES

A. Ball-Valve-Type, Hose-End Drain Valves:

1. Standard: MSS SP-110 for standard-port, two-piece ball valves.

2. Pressure Rating: 400-psig minimum CWP.

3. Size: NPS 3/4 .

4. Body: Copper alloy.

5. Ball: Chrome-plated brass.

6. Seats and Seals: Replaceable.

7. Handle: Vinyl-covered steel.

8. Inlet: Threaded or solder joint.

9. Outlet: Threaded, short nipple with garden-hose thread complying with ASME B1.20.7 and cap with brass chain.

2.8 WATER-HAMMER ARRESTERS

A. Water-Hammer Arresters:

1. Manufacturers: Subject to compliance with requirements, provide products by the following:
   a. AMTROL, Inc.
   b. Josam Company.
   c. MIFAB, Inc.
   f. Smith, Jay R. Mfg. Co.; Division of Smith Industries, Inc.
   g. Tyler Pipe; Wade Div.
   h. Watts Drainage Products.
   i. Zurn Industries, LLC; Plumbing Products Group; Specification Drainage Products.
   j. Or approved equal
2. Standard: ASSE 1010 or PDI-WH 201.
3. Type: Metal bellows.
4. Size: ASSE 1010, Sizes AA and A through F, or PDI-WH 201, Sizes A through F.

2.9 FLEXIBLE CONNECTORS

A. Standard: ASME A112.18.1 , CSA B12, IAPMO PS 74 and PS 48

B. Bronze-Hose Flexible Connectors: Corrugated-bronze tubing with bronze wire-braid covering and ends brazed to inner tubing.

1. Working-Pressure Rating: Minimum 200 psig.
2. End Connections NPS 2 and Smaller: Threaded copper pipe or plain-end copper tube.
3. End Connections NPS 2-1/2 and Larger: Flanged copper alloy.

C. Stainless-Steel-Hose Flexible Connectors: Corrugated-stainless-steel tubing with stainless-steel wire-braid covering and ends welded to inner tubing.

1. Working-Pressure Rating: Minimum 200 psig.
2. End Connections NPS 2 and Smaller: Threaded steel-pipe nipple.
3. End Connections NPS 2-1/2 and Larger: Flanged steel nipple.

2.10 WATER METERS

A. Displacement-Type Water Meters:

1. Manufacturers: Subject to compliance with requirements of NYC DEP, water meter shall be Omni C2 manufactured by Sensus or EvoQ4 eletronic manufactured by Elster AMCO water , LLC, or approved equal.
2. Description:
   a. Standard: AWWA C700.

b. Pressure Rating: 150-psig (1035-kPa) working pressure.

c. Body Design: Nutating disc; totalization meter.

d. Registration: In gallons (liters) or cubic feet (cubic meters) as required by utility company.

e. Case: Bronze.

f. End Connections: Threaded.

B. Remote Registration System: Direct-reading type complying with AWWA C706; modified with signal-transmitting assembly, low-voltage connecting wiring, and remote register assembly as required by utility company.

C. Remote Registration System: Encoder type complying with AWWA C707; modified with signal-transmitting assembly, low-voltage connecting wiring, and remote register assembly as required by utility company.

2.11 DOMESTIC BOOSTER PUMP

A. Booster pump system must be as follows:

a. Booster pump 100 GPM @ 50 PSI pressure boost shall be Model PB-100 Simplex as manufactured by Thrush Company, Inc., DuraMac, Grundfos, or approved equal, having a pressure range of 20 to 80 psig, flow of 100 GPM, pressure boost of 50 psig at 7.5 HP motor, minimum suction pressure of 5 psig and a 40-gallon storage tank precharged to 38 psig.

b. Booster pump 150 GPM @ 50 PSI pressure boost should be model DVM-5.OPC-C-83-VM-PFD-NSF-DOL, Duplex as manufactured by Tigerflow, Duramac, Groundfos or approved equal. Each pump should provide 75 GPM @ 50 PSI of boost and 7.5 HP each.

c. Booster pump 200 GPM @50 PSI booster should be model DVM-7.5PC-C-83-VM-P-VFD-NSF-DOL, Duplex as manufactured by Tigerflow, Duramac, Groundfos or approved equal. Each pump should provide 100 GPM @ 50 SPI booster and 7.5 HP each.

B. Contractor (Electrician) shall verify the power available to the building and order the unit with the correct voltage and phase required. Unit shall be furnished and installed complete with motors indicated above, 1 1/2" Boostrol valve, Nema #1 enclosure, motor starter, start/stop switch, low suction alarm light, power on light, fused disconnect switch, pressure switch set at 40/60 psig and low pressure cut-off switch.

C. The Contractor shall furnish (where required by the contract) and install all the necessary and/or required conduit, wires, boxes, wiring devices, etc. for a complete branch circuit supplying power to the Booster System.

D. The size of the wires shall be the minimum or larger than that specified by the manufacturer. All Work shall be done in accordance with the New York City Electrical Code and in accordance with Section D. All power and control wiring shall be done by this Contractor.

PART 3 - EXECUTION

3.1 INSTALLATION

A. Install backflow preventers in each water supply to mechanical equipment and systems and to other equipment and water systems that may be sources of contamination. Comply with authorities having jurisdiction.

1. Locate backflow preventers in same room as connected equipment or system.

2. Install drain for backflow preventers with atmospheric-vent drain connection with air-gap fitting, fixed air-gap fitting, or equivalent positive pipe separation of at least two pipe diameters in drain piping and pipe-to-floor drain. Locate air-gap device attached to or under backflow preventer. Simple air breaks are unacceptable for this application.

3. Do not install bypass piping around backflow preventers.

B. Install water regulators with inlet and outlet shutoff valves and bypass with memory-stop balancing valve. Install pressure gages on inlet and outlet.

C. Install water-control valves with inlet and outlet shutoff valves and bypass with globe valve. Install pressure gages on inlet and outlet.

D. Install balancing valves in locations where they can easily be adjusted.

E. Install temperature-actuated, water mixing valves with check stops or shutoff valves on inlets and with shutoff valve on outlet. Install cabinet-type units recessed in or surface mounted on wall as specified.

F. Install outlet boxes recessed in wall or surface mounted on wall. Install 2-by-4-inch fire-retardant-treated-wood blocking, wall reinforcement between studs. Comply with requirements for fire-retardant-treated-wood blocking in Section 061000 "Rough Carpentry."

G. Install hose stations with check stops or shutoff valves on inlets and with thermometer on outlet.

1. Install cabinet-type units recessed in or surface mounted on wall as specified. Install 2- by-4-inch fire-retardant-treated-wood blocking, wall reinforcement between studs. Comply with requirements for fire-retardant-treated-wood blocking in Section 061000 "Rough Carpentry."

H. Set nonfreeze, nondraining-type post hydrants in concrete or pavement.

I. Set freeze-resistant yard hydrants with riser pipe in concrete or pavement. Do not encase canister in concrete.

J. Water-hammer arresters shall be installed in accordance with manufacturers' specifications. Install water-hammer arresters in water piping according to PDI-WH 201.

K. Install air vents at high points of water piping.

L. Install supply-type, trap-seal primer valves with outlet piping pitched down toward drain trap a minimum of 1 percent, and connect to floor-drain body, trap, or inlet fitting. Adjust valve for proper flow.

M. Install drainage-type, trap-seal primer valves as lavatory trap with outlet piping pitched down toward drain trap a minimum of 1 percent, and connect to floor-drain body, trap, or inlet fitting.

N. Install trap-seal primer systems with outlet piping pitched down toward drain trap a minimum of 1 percent, and connect to floor-drain body, trap, or inlet fitting. Adjust system for proper flow.

O. Flexible water connectors shall not exceed 24 inch, shall be used in exposed locations only and shall be used singularly: that is, two connectors cannot be joined.

3.2 CONNECTIONS

A. Comply with requirements for ground equipment in Section 260526 "Grounding and Bonding for Electrical Systems."

B. Fire-retardant-treated-wood blocking is specified in Section 260519 "Low-Voltage Electrical Power Conductors and Cables" for electrical connections.

3.3 LABELING AND IDENTIFYING

A. Equipment Nameplates and Signs: Install engraved plastic-laminate equipment nameplate or sign on or near each of the following:

1. Pressure vacuum breakers.
2. Intermediate atmospheric-vent backflow preventers.
3. Reduced-pressure-principle backflow preventers.
4. Double-check, backflow-prevention assemblies.
5. Double-check, detector-assembly backflow preventers.
6. Hose stations.
7. Trap-seal primer systems.

B. Distinguish among multiple units, inform operator of operational requirements, indicate safety and emergency precautions, and warn of hazards and improper operations, in addition to identifying unit. Nameplates and signs are specified in Section 22 05 53 "Identification for Plumbing Piping and Equipment."

3.4 FIELD QUALITY CONTROL

A. Perform the following tests and inspections:

1. Test each pressure vacuum breaker reduced-pressure-principle backflow preventer, double-check, backflow-prevention assembly and double-check, detector-assembly backflow preventer according to authorities having jurisdiction and the device’s reference standard.

B. Domestic water piping specialties will be considered defective if they do not pass tests and inspections.

C. Prepare test and inspection reports.

3.5 ADJUSTING

A. Set field-adjustable pressure set points of water pressure-reducing valves.

B. Set field-adjustable flow set points of balancing valves.

C. Set field-adjustable temperature set points of temperature-actuated, water mixing valves.

END OF SECTION

SECTION 22 13 16 – SANITARY WASTE AND VENT PIPING

PART 1 - GENERAL

1.1 SUMMARY

A. Section Includes:

1. Pipe, tube, and fittings.
2. Specialty pipe fittings.

1.2 PERFORMANCE REQUIREMENTS

A. Components and installation shall be capable of withstanding the following minimum working pressure unless otherwise indicated:

1. Soil, Waste, and Vent Piping: 10-foot head of water.
2. Waste, Force-Main Piping: 150 psig.

1.3 ACTION SUBMITTALS

A. Product Data: For each type of product indicated.

1.4 INFORMATIONAL SUBMITTALS

A. Field quality-control reports.

1.5 QUALITY ASSURANCE

A. Piping materials shall bear label, stamp, or other markings of specified testing agency.

1.6 PROJECT CONDITIONS

A. Interruption of Existing Sanitary Waste Service: Do not interrupt service to facilities occupied by City of New York or others unless permitted under the following conditions and then only after arranging to provide temporary service according to requirements indicated:

1. Notify Resident Engineer no fewer than two days in advance of proposed interruption of sanitary waste service.
2. Do not proceed with interruption of sanitary waste service without Agency's written permission.

PART 2 - PRODUCTS

2.1 PIPING MATERIALS

A. Comply with requirements in "Piping Schedule" Article for applications of pipe, tube, fitting materials, and joining methods for specific services, service locations, and pipe sizes.

2.2 HUB-AND-SPIGOT, CAST-IRON SOIL PIPE AND FITTINGS

A. Pipe and Fittings: ASTM A 74, Service class.

B. Gaskets: ASTM C 564, rubber.

C. Calking Materials: Oakum or hemp.

D. Hub-and-Spigot Pipe and Pipe Fittings:

1. Manufacturers: Subject to compliance with requirements, provide products by one of the following:

a. ANACO-Husky.

b. Dallas Specialty & Mfg. Co.

c. Fernco Inc.

d. Matco-Norca, Inc.

e. MIFAB, Inc.

f. Mission Rubber Company; a division of MCP Industries, Inc.

g. Stant.

h. Tyler Pipe.

i. Or approved equal.

2. Standards: ASTM C 564, ASTM C 1563.

3. Description: Compression gaskets for hub and spigot pipe and fittings shall conform to ASTM C 564 and shall be tested to ASTM C 1563

2.3 HUBLESS, CAST-IRON SOIL PIPE AND FITTINGS

A. Pipe and Fittings: ASTM A 888 or CISPI 301.

B. ASTM B16.4 Gray Iron Threaded Fittings Classes 125 and 250

C. ASTM B16.12 Cast Iron Threaded Drainage Fittings

D. CISPI, Hubless-Piping Couplings:

1. Manufacturers: Subject to compliance with requirements, provide products by one of the following:

a. ANACO-Husky.

b. Dallas Specialty & Mfg. Co.

c. Fernco Inc.

d. Matco-Norca, Inc.

e. MIFAB, Inc.

f. Mission Rubber Company; a division of MCP Industries, Inc.

g. Stant.

h. Tyler Pipe.

i. Or approved equal.

2. Standards: ASTM C 1277, ASTM C 1540 or CISPI 310.

3. Description: The elastomeric sealing sleeve shall conform to ASTM C 564 or CAN/CSA B602 and shall provide with a center stop.

2.5 SPECIALTY PIPE FITTINGS

A. Transition Couplings:

1. General Requirements: Fitting or device for joining piping with small differences in OD's or of different materials. Include end connections same size as and compatible with pipes to be joined.

2. Fitting-Type Transition Couplings: Manufactured piping coupling or specified piping system fitting.

3. Unshielded, Nonpressure Transition Couplings:

   a. Manufacturers: Subject to compliance with requirements, provide products by one of the following:

      1) Dallas Specialty & Mfg. Co.

      2) Fernco Inc.

      3) Mission Rubber Company; a division of MCP Industries, Inc.

      4) Plastic Oddities; a division of Diverse Corporate Technologies, Inc.

      5) or approved equal

   b. Standard: ASTM C 1173.

   c. Description: Elastomeric, sleeve-type, reducing or transition pattern. Include shear ring and corrosion-resistant-metal tension band and tightening mechanism on each end.

   d. Sleeve Materials:

      1) For Cast-Iron Soil Pipes: ASTM C 564, rubber.

      2) For Plastic Pipes: ASTM F 477, elastomeric seal or ASTM D 5926, PVC.

      3) For Dissimilar Pipes: ASTM D 5926, PVC or other material compatible with pipe materials being joined.

4. Shielded, Nonpressure Transition Couplings:

   a. Manufacturers: Subject to compliance with requirements, provide products by one of the following:

      1) Cascade Waterworks Mfg. Co.

      2) Mission Rubber Company; a division of MCP Industries, Inc.

      3) Fernco Inc.

      4) Or approved equal

   b. Standard: ASTM C 1460.

   c. Description: Elastomeric or rubber sleeve with full-length, corrosion-resistant outer shield and corrosion-resistant-metal tension band and tightening mechanism on each end.

5. Mechanical Transition Couplings:
    a. Manufacturers: Subject to compliance with requirements, provide products by one of the following:
        1) Cascade Waterworks Mfg. Co.
        2) Dresser, Inc.
        3) EBAA Iron, Inc.
        4) JCM Industries, Inc.
        5) Romac Industries, Inc.
        6) Smith-Blair, Inc.; a Sensus company.
        7) The Ford Meter Box Company, Inc.
        8) Viking Johnson.
        9) Or approved equal.
    b. Standard: ASTM C 1461
    c. Description: Thermoplastic Electrometric gasket

B. Dielectric Fittings:
1. General Requirements: Assembly of copper alloy and ferrous materials with separating nonconductive insulating material. Include end connections compatible with pipes to be joined.
2. Dielectric Unions:
    a. Manufacturers: Subject to compliance with requirements, provide products by one of the following:
        1) Capitol Manufacturing Company.
        2) Central Plastics Company.
        3) Hart Industries International, Inc.
        4) Jomar International Ltd.
        5) Matco-Norca, Inc.
        6) McDonald, A. Y. Mfg. Co.
        7) Watts Regulator Co.; a division of Watts Water Technologies, Inc.
        8) Wilkins; a Zurn company.
        9) Or approved equal.
    b. Description:
        1) Standard: ASSE 1079.
        2) Pressure Rating: 125 psig (860 kPa) minimum at 180 deg F (82 deg C).
        3) End Connections: Solder-joint copper alloy and threaded ferrous.

3. Dielectric Flanges:
    a. Manufacturers: Subject to compliance with requirements, provide products by one of the following:
        1) Capitol Manufacturing Company.
        2) Central Plastics Company.
        3) Matco-Norca, Inc.
        4) Watts Regulator Co.; a division of Watts Water Technologies, Inc.
        5) Wilkins; a Zurn company.
        6) Or approved equal.
    b. Description:
        1) Standard: ASSE 1079.
        2) Factory-fabricated, bolted, companion-flange assembly.
        3) Pressure Rating: 125 psig (860 kPa) minimum at 180 deg F (82 deg C).
        4) End Connections: Solder-joint copper alloy and threaded ferrous; threaded solder-joint copper alloy and threaded ferrous.
4. Dielectric-Flange Insulating Kits:
    a. Manufacturers: Subject to compliance with requirements, provide products by one of the following:
        1) Advance Products & Systems, Inc.
        2) Calpico, Inc.
        3) Central Plastics Company.
        4) Pipeline Seal and Insulator, Inc.
        5) Or approved equal.
    b. Description:
        1) Nonconducting materials for field assembly of companion flanges.
        2) Pressure Rating: 150 psig (1035 kPa).
        3) Gasket: Neoprene or phenolic.
        4) Bolt Sleeves: Phenolic or polyethylene.
        5) Washers: Phenolic with steel backing washers.
5. Dielectric Nipples:
    a. Manufacturers: Subject to compliance with requirements, provide products by one of the following:
        1) Elster Perfection.
        2) Grinnell Mechanical Products.
        3) Matco-Norca, Inc.

4) Precision Plumbing Products, Inc.

5) Victaulic Company.

6) Or approved equal.

b. Description:

1) Standard: IAPMO PS 66

2) Electroplated steel nipple.

3) Pressure Rating: 300 psig (2070 kPa) at 225 deg F (107 deg C).

4) End Connections: Male threaded or grooved.

5) Lining: Inert and noncorrosive, propylene.

PART 3 - EXECUTION

3.1 PIPING INSTALLATION

A. Drawing plans, schematics, and diagrams indicate general location and arrangement of piping systems. Indicated locations and arrangements were used to size pipe and calculate friction loss, expansion, pump sizing, and other design considerations. Install piping as indicated unless deviations to layout are approved on coordination drawings.

B. Install piping in concealed locations unless otherwise indicated and except in equipment rooms and service areas.

C. Install piping indicated to be exposed and piping in equipment rooms and service areas at right angles or parallel to building walls. Diagonal runs are prohibited unless specifically indicated otherwise.

D. Install piping above accessible ceilings to allow sufficient space for ceiling panel removal.

E. Install piping to permit valve servicing.

F. Install piping at indicated slopes.

G. Install piping free of sags and bends.

H. Install fittings for changes in direction and branch connections.

I. Install piping to allow application of insulation.

K. Make changes in direction for soil and waste drainage and vent piping using appropriate branches, bends, and long-sweep bends. Sanitary tees and short-sweep 1/4 bends may be used on vertical stacks if change in direction of flow is from horizontal to vertical. Use long-turn, double Y-branch and 1/8-bend fittings if two fixtures are installed back to back or side by side with common drain pipe. Straight tees, elbows, and crosses may be used on vent lines. Do not change direction of flow more than 90 degrees. Use proper size of standard increasers and reducers if pipes of different sizes are connected. Reducing size of drainage piping in direction of flow is prohibited.

L. Lay buried building drainage piping beginning at low point of each system. Install true to grades and alignment indicated, with unbroken continuity of invert. Place hub ends of piping upstream. Install required gaskets according to manufacturer's written instructions for use of lubricants, cements, and other installation requirements.

Maintain swab in piping and pull past each joint as completed.

M. Install soil and waste drainage and vent piping at the following minimum slopes unless otherwise indicated:

1. Building Sanitary Drain: 2 NPS 3 and smaller; 2 percent downward in direction of flow for piping NPS 4 and larger.

2. Horizontal Sanitary Drainage Piping: 2 percent downward in direction of flow.

3. Vent Piping: 1 percent down toward vertical fixture vent or toward vent stack.

N. Install cast-iron soil piping according to CISPI's "Cast Iron Soil Pipe and Fittings Handbook," Chapter IV, "Installation of Cast Iron Soil Pipe and Fittings."

1. Install encasement on underground piping according to ASTM A 674 or AWWA C105/A 21.5.

O. Install steel piping according to applicable plumbing code.

P. Install engineered soil and waste drainage and vent piping systems as follows:

1. Combination Waste and Vent: Comply with standards of authorities having jurisdiction.

3. Reduced-Size Venting: Comply with standards of authorities having jurisdiction.

Q. Install underground, ductile-iron, force-main piping according to AWWA C600. Install buried piping inside building between wall and floor penetrations and connection to sanitary sewer piping outside building with restrained joints. Anchor pipe to wall or floor. Install thrust-block supports at vertical and horizontal offsets.

1. Install encasement on piping according to ASTM A 674 or AWWA C105/A 21.5.

R. Install underground, copper, force-main tubing according to CDA's "Copper Tube Handbook."

1. Install encasement on piping according to ASTM A 674 or AWWA 105/A 21.5.

S. Install force mains at elevations indicated.

T. Plumbing Specialties:

1. Install backwater valves in sanitary waster gravity-flow piping. Comply with requirements for backwater valves specified in Section 221319 "Sanitary Waste Piping Specialties."

2. Install cleanouts at grade and extend to where building sanitary drains connect to building sanitary sewers in sanitary drainage gravity-flow piping. Install cleanout fitting with closure plug inside the building in sanitary drainage force-main piping. Comply with requirements for cleanouts specified in Section 221319 "Sanitary Waste Piping Specialties."

3. Install drains in sanitary drainage gravity-flow piping. Comply with requirements for drains specified in Section 221319 "Sanitary Waste Piping Specialties."

U. Do not enclose, cover, or put piping into operation until it is inspected and approved by authorities having jurisdiction.

V. Install sleeves for piping penetrations of walls, ceilings, and floors. Comply with requirements for sleeves specified in Section 220517 "Sleeves and Sleeve Seals for Plumbing Piping."

W. Install sleeve seals for piping penetrations of concrete walls and slabs. Comply with requirements for sleeve seals specified in Section 220517 "Sleeves and Sleeve Seals for Plumbing Piping."

X. Install escutcheons for piping penetrations of walls, ceilings, and floors. Comply with requirements for escutcheons specified in Section 220518 "Escutcheons for Plumbing Piping."

3.2 JOINT CONSTRUCTION

B. Caulked Joints: Joints for hub and spigot pipe shall be firmly packed with oakum or hemp. Molten lead shall be poured in one operation to a depth of not less than 1 inch. The lead shall not recede more than 0.125 inch below the rim of the hub and shall be caulked tight. Paint, varnish or other coatings shall not be permitted on the jointing material until after the join has been tested and approved. Lead shall be run in one pouring and shall be caulked tight. Acid-resistant rope and acid proof cement shall be permitted.

D. Compression Gasket Joints: Compression gaskets for hub and spigot pipe and fittings shall conform to ASTM C 564 and shall be tested to ASTM C 1563. Gaskets shall be compressed when the pipe is fully insert.

E. Mechanical Joint Coupling: Mechanical Joint coupling for hub-less pipe and fittings shall comply with CISPI 310 or ASTM C 1277 or ASTM C 1540. The elastomeric sealing sleeve shall conform to ASTM C 564 or CAN/CSA B602 and shall be provided with a center stop. Mechanical joint couplings shall be installed in accordance with the manufacturer’s installation instructions.

F. Join hub-and-spigot, cast-iron soil piping with calked joints according to CISPI's "Cast Iron Soil Pipe and Fittings Handbook" for lead-and-oakum calked joints

G. Join hubless, cast-iron soil piping according to CISPI 310 and CISPI's "Cast Iron Soil Pipe and Fittings Handbook" for hubless-piping coupling joints. Threaded Joints:

H. Joints between different materials: Joints between different piping materials shall be made with a mechanical joint of the compression or mechanical-sealing type conforming to ASTM C1173, ASTM C 1460, or ASTM C 1461. Connectors and adaptors shall have an elastomeric seal conforming to ASTM C 425, ASTM C 443, ASTM C 564, ASTM C 1440, ASTM D 1869, ASTM F 477, CAN/CSA A257.3 M or CAN/CSA B 602 or as required from following:

1. Copper or copper-alloy tubing to cast-iron hub pipe: Joints between copper or copper-alloy tubing and cast-iron hub pipe shall be made with a brass ferrule or compression joint. The copper or copper-alloy tubing shall be soldered to the ferrule in an approved manner, and the ferrule shall be joined to the cast-iron hub by a caulked joint or a mechanical compression joint.

2. Cast-iron pipe to galvanized steel or brass pipe: Joints between cast-iron and galvanized steel or brass pipe shall be made by either caulked or threaded joints or with an approved adapter fitting.

3. Plastic pipe or tubing to other material: Joints between different grades of plastic pipe or between plastic pipe and other piping material shall be made with an approved adapter fitting. Joints between plastic pipe and cast iron hub pipe shall be made by a caulked joint or a mechanical compression joint.

4. Lead pipe to other piping materials: Joint between lead pipe and other piping material shall be made by a wiped joint to a caulking ferrule, soldering nipple, or bushing or shall be made with an approved adapter fitting.

5. Borosilicate glass to other materials: Joints between glass pipe and other type of materials shall be made with adapters having a TFE seal and shall be installed in accordance with the manufacturer's instruction.

6. Stainless steel drainage systems to other materials: Joints between stainless steel drainage systems and other piping materials shall be made with approved mechanical couplings.

Joint between glass pipe and other types of materials shall be made with adapters having a TEF seal. Joint shall be installed in accordance with the manufacturer's instructions.

I. Slip Joints connections: Slip joints shall be made with an approved elastomeric gasket and shall only be installed on the trap outlet, trap inlet and within the trap seal. Fixtures with concealed slip-joint connections shall be provided with an access panel or utility space at least 12 inches in its smallest dimension or other approved arrangement so as to provide access to the slip joint connection for inspection.

J. Caulking ferrules: Ferrules shall be of red brass and shall be in accordance with 2014 New York City Plumbing Code Table 705.21 Caulking Ferrule Specifications

K. Soldering Bushing: Soldering bushing shall be of red brass and shall be in accordance with 2014 New York City Plumbing Code Table 705.22 – Soldering Busing Specifications.

L. Thread pipe with tapered pipe threads according to ASME B1.20.1. Cut threads full and clean using sharp dies. Ream threaded pipe ends to remove burrs and restore full ID. Join pipe fittings and valves as follows:

1. Apply appropriate tape or thread compound to external pipe threads unless dry seal threading is specified.

2. Damaged Threads: Do not use pipe or pipe fittings with threads that are corroded or damaged. Do not use pipe sections that have cracked or open

3.3 SPECIALTY PIPE FITTING INSTALLATION

A. Transition Couplings:

1. Install transition couplings at joints of piping with small differences in OD's.

2. In Drainage Piping: Shielded, nonpressure transition couplings.

3. In Aboveground Force Main Piping: Fitting-type transition couplings.

4. In Underground Force Main Piping:

a. NPS 1-1/2 and Smaller: Fitting-type transition couplings.

b. NPS 2 and Larger: Pressure transition couplings.

B. Dielectric Fittings:

1. Install dielectric fittings in piping at connections of dissimilar metal piping and tubing.

2. Dielectric Fittings for NPS 2 and Smaller: Use dielectric nipples.

3. Dielectric Fittings for NPS 2-1/2 to NPS 4: Use dielectric nipples.

4. Dielectric Fittings for NPS 5 and Larger: Use dielectric flange kits.

3.4 HANGER AND SUPPORT INSTALLATION

A. Comply with requirements for pipe hanger and support devices and installation specified in Section 22 05 29 "Hangers and Supports for Plumbing Piping and Equipment."

B. Comply with requirements for pipe hanger and support devices and installation specified in Section 22 05 29 "Hangers and Supports for Plumbing Piping and Equipment."

1. Install carbon-steel pipe hangers for horizontal piping in noncorrosive environments.
2. Install stainless-steel pipe hangers for horizontal piping in corrosive environments.
3. Install carbon-steel pipe support clamps for vertical piping in noncorrosive environments.
4. Install stainless-steel pipe support clamps for vertical piping in corrosive environments.
5. Vertical Piping: MSS Type 8 or Type 42, clamps.
6. Install individual, straight, horizontal piping runs:
   a. 100 Feet and Less: MSS Type 1, adjustable, steel clevis hangers.
   b. Longer Than 100 Feet : MSS Type 43, adjustable roller hangers.
   c. Longer than 100 Feet if indicated: MSS Type 49, spring cushion rolls.
7. Multiple, Straight, Horizontal Piping Runs 100 Feet or Longer: MSS Type 44, pipe rolls. Support pipe rolls on trapeze.
8. Base of Vertical Piping: MSS Type 52, spring hangers.

C. Support horizontal piping and tubing within 12 inches (300 mm) of each fitting, valve, and coupling.

D. Support vertical piping and tubing at base and at each floor.

E. Rod diameter may be reduced one size for double-rod hangers, with 3/8-inch (10-mm) minimum rods.

F. Install hangers for cast-iron soil piping with the following maximum horizontal spacing and minimum rod diameters:

1. NPS 1-1/2 and NPS 2: 60 inches with 3/8-inch rod.
2. NPS 3: 60 inches with 1/2-inch rod.
3. NPS 4 and NPS 5: 60 inches with 5/8-inch rod.
4. NPS 6 and NPS 8: 60 inches with 3/4-inch rod.
5. NPS 10 and NPS 12: 60 inches with 7/8-inch rod.
6. Spacing for 10-foot lengths may be increased to 10 feet. Spacing for fittings is limited to 60 inches.

G. Install supports for vertical cast-iron soil piping at base and at each story height no greater than 20 feet.

H. Install hangers for steel piping with the following maximum horizontal spacing and minimum rod diameters:

1. NPS 1-1/4: 84 inches with 3/8-inch rod.
2. NPS 1-1/2: 108 inches with 3/8-inch rod.
3. NPS 2: 10 feet with 3/8-inch rod.
4. NPS 2-1/2: 11 feet with 1/2-inch rod.
5. NPS 3: 12 feet with 1/2-inch rod.
6. NPS 4 and NPS 5: 12 feet with 5/8-inch rod.
7. NPS 6 and NPS 8: 12 feet with 3/4-inch rod.
8. NPS 10 and NPS 12: 12 feet with 7/8-inch rod.

I. Install supports for vertical steel piping every 15 feet.

3.5 CONNECTIONS

A. Drawings indicate general arrangement of piping, fittings, and specialties.

B. Connect soil and waste piping to exterior sanitary sewerage piping. Use transition fitting to join dissimilar piping materials.

C. Connect drainage and vent piping to the following:

1. Plumbing Fixtures: Connect drainage piping in sizes indicated, but not smaller than required by plumbing code.
2. Plumbing Fixtures and Equipment: Connect atmospheric vent piping in sizes indicated, but not smaller than required by authorities having jurisdiction.
3. Plumbing Specialties: Connect drainage and vent piping in sizes indicated, but not smaller than required by plumbing code.
4. Install test tees (wall cleanouts) in conductors near floor and floor cleanouts with cover flush with floor.
5. Comply with requirements for cleanouts and drains specified in Section 221319 "Sanitary Waste Piping Specialties."
6. Equipment: Connect drainage piping as indicated. Provide shutoff valve if indicated and union for each connection. Use flanges instead of unions for connections NPS 2-1/2 and larger.

D. Connect force-main piping to the following:

1. Sanitary Sewer: To exterior force main.

E. Where installing piping adjacent to equipment, allow space for service and maintenance of equipment.

F. Make connections according to the following unless otherwise indicated:

1. Install unions, in piping NPS 2 and smaller, adjacent to each valve and at final connection to each piece of equipment.

2. Install flanges, in piping NPS 2-1/2 and larger, adjacent to flanged valves and at final connection to each piece of equipment.

3.6 IDENTIFICATION

A. Identify exposed sanitary waste and vent piping. Comply with requirements for identification specified in Section 220553 "Identification for Plumbing Piping and Equipment."

3.7 FIELD QUALITY CONTROL

A. During installation, notify authorities having jurisdiction at least 24 hours before inspection must be made. Perform tests specified below in presence of authorities having jurisdiction.

1. Roughing-in Inspection: Arrange for inspection of piping before concealing or closing-in after roughing-in and before setting fixtures.

2. Final Inspection: Arrange for final inspection by authorities having jurisdiction to observe tests specified below and to ensure compliance with requirements.

B. Re-inspection: If authorities having jurisdiction find that piping will not pass test or inspection, make required corrections and arrange for re-inspection.

C. Reports: Prepare inspection reports and have them signed by authorities having jurisdiction.

D. Test sanitary drainage and vent piping according to procedures of authorities having jurisdiction or, in absence of published procedures, as follows:

1. Test for leaks and defects in new piping and parts of existing piping that have been altered, extended, or repaired. If testing is performed in segments, submit separate report for each test, complete with diagram of portion of piping tested.

2. Leave uncovered and unconcealed new, altered, extended, or replaced drainage and vent piping until it has been tested and approved. Expose work that was covered or concealed before it was tested.

3. Roughing-in Plumbing Test Procedure: Test drainage and vent piping except outside leaders on completion of roughing-in. Close openings in piping system and fill with water to point of overflow, but not less than 10-foot head of water. From 15 minutes before inspection starts to completion of inspection, water level must not drop. Inspect joints for leaks.

4. Finished Plumbing Test Procedure: After plumbing fixtures have been set and traps filled with water, test connections and prove they are gastight and watertight. Plug vent- stack openings on roof and building drains where they leave building. Introduce air into piping system equal to pressure of 1-inch wg (250 Pa). Use U-tube or manometer inserted in trap of water closet to measure this pressure. Air pressure must remain constant without introducing additional air throughout period of inspection. Inspect plumbing fixture connections for gas and water leaks.

5. Repair leaks and defects with new materials and retest piping, or portion thereof, until satisfactory results are obtained.

6. Prepare reports for tests and required corrective action.

E. Test force-main piping according to procedures of authorities having jurisdiction or, in absence of published procedures, as follows:

1. Leave uncovered and unconcealed new, altered, extended, or replaced force-main piping until it has been tested and approved. Expose work that was covered or concealed before it was tested.

2. Cap and subject piping to static-water pressure of 50 psig above operating pressure, without exceeding pressure rating of piping system materials. Isolate test source and allow to stand for four hours. Leaks and loss in test pressure constitute defects that must be repaired.

3. Repair leaks and defects with new materials and retest piping, or portion thereof, until satisfactory results are obtained.

4. Prepare reports for tests and required corrective action.

3.8 CLEANING AND PROTECTION

A. Clean interior of piping. Remove dirt and debris as work progresses.

B. Protect drains during remainder of construction period to avoid clogging with dirt and debris and to prevent damage from traffic and construction work.

C. Place plugs in ends of uncompleted piping at end of day and when work stops.

3.9 PIPING SCHEDULE

A. Flanges and unions may be used on aboveground pressure piping unless otherwise indicated.

B. Aboveground, soil and waste piping NPS 4 and smaller shall be any of the following:

1. Hubless, cast-iron soil pipe and fittings CISPI heavy-duty hubless-piping couplings; and coupled joints.

2. Copper DWV tube, copper drainage fittings, and soldered joints.

3. Dissimilar Pipe-Material Couplings: Shielded, nonpressure transition couplings.

C. Aboveground, soil and waste piping NPS 5 and larger shall be any of the following:

1. Service class, cast-iron soil pipe and fittings; gaskets; and gasketed joints.

2. Hubless, cast-iron soil pipe and fittings and sovent stack fittings; CISP hubless-piping couplings; and coupled joints.

3. Dissimilar Pipe-Material Couplings: Shielded, nonpressure transition couplings.

D. Aboveground, vent piping NPS 4 and smaller shall be any of the following:

1. Service class, cast-iron soil pipe and fittings; gaskets; and gasketed joints.

2. Hubless, cast-iron soil pipe and fittings; [CISPI] [heavy-duty] hubless-piping couplings; and coupled joints.

3. Galvanized-steel pipe, drainage fittings, and threaded joints.

4. Copper DWV tube, copper drainage fittings, and soldered joints.

a. Option for Vent Piping, NPS 2-1/2 and NPS 3-1/2: Hard copper tube, Type K; copper pressure fittings; and soldered joints.

5. Dissimilar Pipe-Material Couplings: Shielded, nonpressure transition couplings.

E. Aboveground, vent piping NPS 5 and larger shall be any of the following:

1. Service class, cast-iron soil pipe and fittings; gaskets; and gasketed joints.
2. Hubless, cast-iron soil pipe and fittings; [CISPI] hubless-piping couplings; and coupled joints.
3. Galvanized-steel pipe, drainage fittings, and threaded joints.
4. Dissimilar Pipe-Material Couplings: Shielded, nonpressure transition couplings.

F. Aboveground sanitary-sewage force mains NPS 1-1/2 and NPS 2 shall be any of the following:

1. Hard copper tube, Type K; copper pressure fittings; and soldered joints.
2. Galvanized-steel pipe, pressure fittings, and threaded joints.

G. Belowground, sanitary and vent piping shall be the following:

1. Extra heavy-weight, coated, cast iron bell and spigot pipe and fittings with Neoprene gasket joints.

END OF SECTION

SECTION 22 13 19 – SANITARY WASTE PIPING SPECIALTIES

PART 1 - GENERAL

1.1 RELATED DOCUMENTS

A. The work under this section shall include all labor, material, plant equipment, services and administrative tasks required to complete and make operable the plumbing work

1.2 SUMMARY

A. Section Includes:

1. Cleanouts.
2. Floor drains with cleanout
3. Backwater valves
3. Roof flashing assemblies.
4. Through-penetration firestop assemblies.
5. Miscellaneous sanitary drainage piping specialties.
6. Flashing materials.

B. Related Requirements:

1. Section 22 13 16 "Sanitary Waste and Vent piping" for piping inside the building, drainage piping specialties, and drains.

1.3 ACTION SUBMITTALS

A. Product Data: For each type of product indicated. Include rated capacities, operating characteristics, and accessories for the following:

B. Shop Drawings: Show fabrication and installation details for frost-resistant vent terminals.

1. Wiring Diagrams: Power, signal, and control wiring.

C. Field quality-control reports.

1.4 CLOSEOUT SUBMITTALS

A. Operation and Maintenance Data: For drainage piping specialties to include in emergency, operation, and maintenance manuals.

1.5 QUALITY ASSURANCE

A. Drainage piping specialties shall bear label, stamp, or other markings of specified testing agency.

B. Electrical Components, Devices, and Accessories: Listed and labeled as defined in NFPA 70, Article 100, by a testing agency acceptable to authorities having jurisdiction, and marked for intended use.

C. Comply with NSF 14, "Plastics Piping Components and Related Materials," for plastic sanitary piping specialty components.

1.6 COORDINATION

A. Coordinate size and location of concrete bases. Cast anchor-bolt inserts into bases. Concrete, reinforcement, and formwork requirements are specified in Section 033000 “Cast-in-Place Concrete."

B. Coordinate size and location of roof penetrations.

1.7 MAINTENANCE MATERIAL SUBMITTALS

A. Furnish extra materials described below that match products installed and that are packaged with protective covering for storage and identified with labels describing contents.

1. Cultures: Provide 1-gal. Bottles of bacteria culture recommended by manufacturer of FOG disposal systems equal to 200 percent of amount installed, but no fewer than 2 1-gal. Bottles.

PART 2 - PRODUCTS

2.1 CLEANOUTS

A. Exposed Metal Cleanouts:

1. Manufacturers: Subject to compliance with requirements, provide products by the following:
    1) Josam Company.
    2) MIFAB, Inc.
    3) Smith, Jay R. Mfg. Co.
    4) Tyler Pipe.
    5) Watts Drainage Products.
    6) Zurn Plumbing Products Group.
    7) Or approved equal.
2. Standard: ASME A112.3.1, ASME A112.36.2M or ASTM A 74
3. Size: Minimum 3-inch or same as connected drainage piping.
4. Body: Cast-iron hubless, cast-iron soil pipe test tee as required to match connected piping.
5. Closure: Countersunk cast-iron plug.
6. Closure Plug Size: Same as or not more than one size smaller than cleanout size.
7. Cleanout plug: Brass. Countersunk square head.

B. Cast-Iron Wall Cleanouts:

1. Manufacturers: Subject to compliance with requirements, provide products by the following:
    a. Josam Company; Josam Div.
    b. MIFAB, Inc.

c. Smith, Jay R. Mfg. Co.

d. Tyler Pipe; Wade Div.

e. Watts Drainage Products.

f. Zurn Plumbing Products Group; Specification Drainage Operation.

g. Or approved equal.

2. Standard: ASME A112.36.2M. Include wall access.

3. Size: Same as connected drainage piping.

4. Body: Cast-iron hubless, cast-iron soil pipe test tee as required to match connected piping.

5. Closure: Countersunk cast-iron plug.

6. Closure Plug Size: Same as or not more than one size smaller than cleanout size.

7. Wall Access: Round, deep, chrome-plated bronze cover plate with screw.

8. Wall Access: Round, nickel-bronze, wall-installation frame and cover.

9. Cleanout plug: Brass. Countersunk square head.

2.2 FLOOR DRAINS WITH INTREGAL TRAP AND FLOOR-LEVEL CLEANOUTS

A. Cast-Iron Floor Drains:

1. Manufacturers: Subject to compliance with requirements, provide products by the following:

a. Josam Company; Josam Div.

b. MIFAB, Inc.

c. Prier Products, Inc.

d. Smith, Jay R. Mfg. Co.

e. Tyler Pipe; Wade Div.

f. Watts Drainage Products.

g. Zurn Plumbing Products Group; Light Commercial Operation.

h. Or approved equal.

2. Standard: ASME A112.3.1, ASME A112.6. Or CSA B79

3. Pattern: Floor drain.

4. Body Material: Cast iron.

5. Seepage Flange Required.

6. Anchor Flange: Required.

7. Clamping Device: Required.

8. Outlet: Minimum 3-inch and Bottom.

9. Coating on Interior and Exposed Exterior Surfaces: Not required.

10. Sediment Bucket: Not required.

11. Top or Strainer Material: Removable strainer and Stainless Steel
12. Top of Body and Strainer Finish: Stainless Steel
13. Top Shape: Round.
14. Funnel: Not required.
15. Inlet Fitting: Not required Gray iron, with threaded inlet and threaded or spigot outlet, and trap-seal primer valve connection.
16. Trap Material: Bronze
17. Trap Pattern: Standard P-trap
18. Trap Features: Cleanout

2.4 THROUGH-PENETRATION FIRESTOP ASSEMBLIES

A. Standard:

1. Standard: UL 1479 assembly of sleeve-and-stack fitting with firestopping plug.
2. Size: Same as connected soil, waste, or vent stack.
3. Sleeve: Molded-PVC plastic, of length to match slab thickness and with integral nailing flange on one end for installation in cast-in-place concrete slabs.
4. Stack Fitting: ASTM A 48, gray-iron, hubless-pattern wye branch with neoprene O-ring at base and gray-iron plug in thermal-release harness. Include PVC protective cap for plug.
5. Special Coating: Corrosion resistant on interior of fittings.

2.5 MISCELLANEOUS SANITARY DRAINAGE PIPING SPECIALTIES

A. Floor-Drain, Trap-Seal Primer Fittings:

1. Description: Cast iron, with threaded inlet and threaded or spigot outlet, and trap-seal primer valve connection.
2. Size: Same as floor drain outlet with NPS 1/2 side inlet.

B. Sleeve Flashing Device:

1. Description: Manufactured, cast-iron fitting, with clamping device that forms sleeve for pipe floor penetrations of floor membrane. Include galvanized-steel pipe extension in top of fitting that will extend dimension identified by engineer, above finished floor and galvanized-steel pipe extension in bottom of fitting that will extend through floor slab.
2. Size: As required for close fit to riser or stack piping.

2.6 FLASHING MATERIALS

A. Lead Sheet: ASTM B 749, Type L51121, copper bearing, with the following minimum weights and thicknesses, unless otherwise indicated:

1. General Use: 4.0-lb/sq. ft., 0.0625-inch thickness.
2. Vent Pipe Flashing: 3.0-lb/sq. ft., 0.0469-inch thickness.
3. Burning: 6-lb/sq. ft., 0.0938-inch thickness.

B. Copper Sheet: ASTM B 152/B 152M, of the following minimum weights and thicknesses, unless otherwise indicated:

1. General Applications: 12 oz. /sq. ft.

2. Vent Pipe Flashing: 8 oz. /sq. ft.

C. Zinc-Coated Steel Sheet: ASTM A 653/A 653M, with 0.20 percent copper content and 0.04- inch minimum thickness, unless otherwise indicated. Include G90 hot-dip galvanized, mill-phosphatized finish for painting if indicated.

D. Elastic Membrane Sheet: ASTM D 4068, flexible, chlorinated polyethylene, 40-mil minimum thickness.

E. Fasteners: Metal compatible with material and substrate being fastened.

F. Metal Accessories: Sheet metal strips, clamps, anchoring devices, and similar accessory units required for installation; matching or compatible with material being installed.

G. Solder: ASTM B 32, lead-free alloy.

H. Bituminous Coating: SSPC-Paint 12, solvent-type, bituminous mastic.

PART 3 - EXECUTION

3.1 INSTALLATION

A. Install cleanouts in aboveground piping and building drain piping according to the following, unless otherwise indicated:

1. Size same as drainage piping up to NPS 4. Use NPS for larger drainage piping unless larger cleanout is indicated.

2. Locate at each change in direction of piping greater than 45 degrees.

3. Locate at minimum intervals of 50 feet for piping NPS 4 and smaller and 100 feet for larger piping.

4. Locate at base of each vertical soil and waste stack.

B. For floor cleanouts for piping below floors, install cleanout deck plates with top flush with finished floor.

C. For cleanouts located in concealed piping, install cleanout wall access covers, of types indicated, with frame and cover flush with finished wall.

D. Install floor drains at low points of surface areas to be drained. Set grates of drains flush with finished floor, unless otherwise indicated.

1. Position floor drains for easy access and maintenance.

2. Set floor drains below elevation of surrounding finished floor to allow floor drainage. Set with grates depressed according to the following drainage area radii:

a. Radius, 30 Inches or Less: Equivalent to 1 percent slope, but not less than 1/4-inch total depression.

b. Radius, 30 to 60 Inches: Equivalent to 1 percent slope.

c. Radius, 60 Inches or Larger: Equivalent to 1 percent slope, but not greater than 1-inch total depression.

3. Install floor-drain flashing collar or flange so no leakage occurs between drain and adjoining flooring. Maintain integrity of waterproof membranes where penetrated.

4. Install individual traps for floor drains connected to sanitary building drain, unless otherwise indicated.

E. Install trench drains at low points of surface areas to be drained. Set grates of drains flush with finished surface, unless otherwise indicated.

F. Assemble and install ASME A112.3.1, stainless-steel channel drainage systems according to ASME A112.3.1. Install on support devices so that top will be flush with surface.

G. Assemble non-ASME A112.3.1, stainless-steel channel drainage system components according to manufacturer's written instructions. Install on support devices so that top will be flush with adjacent surface.

H. Assemble FRP channel drainage system components according to manufacturer’s written instructions. Install on support devices so that top will be flush with adjacent surface.

I. Assemble plastic channel drainage system components according to manufacturer's written instructions. Install on support devices so that top will be flush with adjacent surface.

J. Install fixture air-admittance valves on fixture drain piping.

K. Install stack air-admittance valves at top of stack vent and vent stack piping.

L. Install air-admittance-valve wall boxes recessed in wall.

M. Install roof flashing assemblies on sanitary stack vents and vent stacks that extend through roof.

N. Install flashing fittings on sanitary stack vents and vent stacks that extend through roof.

O. Assemble open drain fittings and install with top of hub 2 inches above floor.

P. Install deep-seal traps on floor drains and other waste outlets, if indicated.

Q. Install floor-drain, trap-seal primer fittings on inlet to floor drains that require trap-seal primer connection.

1. Exception: Fitting may be omitted if trap has trap-seal primer connection.

2. Size: Same as floor drain inlet.

R. Install air-gap fittings on draining-type backflow preventers and on indirect-waste piping discharge into sanitary drainage system.

S. Install sleeve flashing device with each riser and stack passing through floors with waterproof membrane.

T. Install vent caps on each vent pipe passing through roof.

U. Install wood-blocking reinforcement for wall-mounting-type specialties.

V. Install traps on plumbing specialty drain outlets. Omit traps on indirect wastes unless trap is indicated.

3.2 CONNECTIONS

A. Comply with requirements in Section 221316 "Sanitary Waste and Vent piping" for piping installation requirements. Drawings indicate general arrangement of piping, fittings, and specialties.

B. Install piping adjacent to equipment to allow service and maintenance.

C. FOG Disposal Systems: Connect inlet and outlet to unit, connect flow-control fitting and fresh- air inlet piping to unit inlet piping, and connect vent piping between trap and media chamber. Connect electrical power.

D. Grease Interceptors: Connect inlet and outlet to unit, and connect flow-control fitting and vent to unit inlet piping. Install valve on outlet of automatic draw-off-type unit.

E. Grease Removal Devices: Connect controls, electrical power, factory-furnished accessories, and inlet, outlet, and vent piping to unit.

F. Oil Interceptors: Connect inlet, outlet, vent, and gravity draw-off piping to unit; flow-control fitting and vent to unit inlet piping; and gravity draw-off and suction piping to oil storage tank.

G. Ground equipment according to Section 260526 "Grounding and Bonding for Electrical Systems."

H. Connect wiring according to Section 260519 "Low-Voltage Electrical Power Conductors and Cables."

3.3 FLASHING INSTALLATION

A. Fabricate flashing from single piece unless large pans, sumps, or other drainage shapes are required. Join flashing according to the following if required:

1. Lead Sheets: Burn joints of lead sheets 6.0-lb/sq. ft., 0.0938-inch thickness or thicker. Solder joints of lead sheets 4.0-lb/sq. ft., 0.0625-inch thickness or thinner.

2. Copper Sheets: Solder joints of copper sheets.

B. Install sheet flashing on pipes, sleeves, and specialties passing through or embedded in floors and roofs with waterproof membrane.

1. Pipe Flashing: Sleeve type, matching pipe size, with minimum length of 10 inches, and skirt or flange extending at least 8 inches around pipe.

2. Sleeve Flashing: Flat sheet, with skirt or flange extending at least 8 inches around sleeve.

3. Embedded Specialty Flashing: Flat sheet, with skirt or flange extending at least 8 inches around specialty.

C. Set flashing on floors and roofs in solid coating of bituminous cement.

D. Secure flashing into sleeve and specialty clamping ring or device.

E. Install flashing for piping passing through roofs with counterflashing or commercially made flashing fittings, according to Section 07 6000 "Sheet Metal and Trim."

F. Extend flashing up vent pipe passing through roofs and turn down into pipe, or secure flashing into cast-iron sleeve having calking recess.

G. Fabricate and install flashing and pans, sumps, and other drainage shapes.

3.4 LABELING AND IDENTIFYING

A. Distinguish among multiple units, inform operator of operational requirements, indicate safety and emergency precautions, and warn of hazards and improper operations, in addition to identifying unit. Nameplates and signs are specified in Section 220553 "Identification for Plumbing Piping and Equipment."

3.5 FIELD QUALITY CONTROL

A. Perform tests and inspections and prepare test reports.

1. Manufacturer's Field Service: Engage a factory-authorized service representative to inspect field-assembled FOG disposal systems and grease removal devices and their installation, including piping and electrical connections, and to assist in testing.

B. Tests and Inspections:

1. Leak Test: After installation, charge system and test for leaks. Repair leaks and retest until no leaks exist.

2. Test and adjust controls and safeties. Replace damaged and malfunctioning controls and equipment.

3.6 PROTECTION

A. Protect drains during remainder of construction period to avoid clogging with dirt or debris and to prevent damage from traffic or construction work.

B. Place plugs in ends of uncompleted piping at end of each day or when work stops.

END OF SECTION

SECTION 22 14 13 – FACILITY STORM DRAINAGE PIPING

PART 1 - GENERAL

1.1 SUMMARY

A. This Section includes storm drainage inside the building up to a point 5’-0” outside the building including:

1. Pipe, tube, and fittings.
2. Special pipe fittings.

1.2 PERFORMANCE REQUIREMENTS

A. Components and installation shall be capable of withstanding the following minimum working pressure, unless otherwise indicated:

1. Storm Drainage Piping: 10-foot head of water.

1.3 SUBMITTALS

A. LEED Submittal:

1. Product Data for Credit EQ 4.1: For solvent cements and adhesive primers, including printed statement of VOC content.

B. Field quality-control inspection and test reports.

1.4 QUALITY ASSURANCE

A. Piping materials shall bear label, stamp, or other markings of specified testing agency.

PART 2 - PRODUCTS

2.1 PIPING MATERIALS

A. Hub-and-Spigot, Cast-Iron Pipe and Fittings: ASTM A 74, Service class.

1. Gaskets: ASTM C 564, rubber.

B. Hubless Cast-Iron Pipe and Fittings: ASTM A 888 or CISPI 301.

1. Shielded Couplings: ASTM C 1277 assembly of metal shield or housing, corrosion- resistant fasteners, and rubber sleeve with integral, center pipe stop.

a. Standard, Shielded, Stainless-Steel Couplings: CISPI 310, with stainless-steel corrugated shield; stainless-steel bands and tightening devices; and ASTM C 564, rubber sleeve.

PART 3 - EXECUTION

3.1 PIPING APPLICATIONS

A. Special pipe fittings with pressure ratings at least equal to piping pressure ratings may be used in applications below, unless otherwise indicated.

B. Aboveground storm drainage piping shall be:

1. Hubless cast-iron soil pipe and fittings; standard, shielded, stainless-steel couplings; and coupled joints.

C. Underground storm drainage piping to 5’-0” outside building shall be one of the following:

1. Service class, cast-iron soil pipe and fittings; gaskets; and gasketed joints.

3.2 PIPING INSTALLATION

A. Site storm sewer and piping to a point 5’-0” outside the building is specified in Division 33 Section "Storm Utility Drainage Piping."

B. Basic piping installation requirements are specified in Division 22 Section "Common Work Results for Plumbing."

C. Install cast-iron soil piping according to CISPI's "Cast Iron Soil Pipe and Fittings Handbook," Chapter IV, "Installation of Cast Iron Soil Pipe and Fittings."

D. Make changes in direction for storm piping using appropriate branches, bends, and long-sweep bends. Do not change direction of flow more than 90 degrees. Use proper size of standard increasers and reducers if pipes of different sizes are connected. Reducing size of drainage piping in direction of flow is prohibited.

E. Lay buried building drain piping beginning at low point of each system. Install true to grades and alignment indicated, with unbroken continuity of invert. Place hub ends of piping upstream. Install required gaskets according to manufacturer's written instructions for use of lubricants, cements, and other installation requirements. Maintain swab in piping and pull past each joint as completed.

F. Install storm drainage piping at 1 percent downward in direction of flow.

G. Sleeves are not required for cast-iron soil piping passing through concrete slabs-on-grade if slab is without membrane waterproofing.

H. Do not enclose, cover, or put piping into operation until it is inspected and approved by authorities having jurisdiction.

I. Install sleeves for piping penetrations of walls, ceilings, and floors. Comply with requirements for sleeves specified in Division 22 Section "Common Work Results for Plumbing”.

J. Install sleeve seals for piping penetrations of concrete walls and slabs. Comply with requirements for sleeve seals specified in Division 22 Section "Common Work Results for Plumbing”.

K. Install escutcheons for piping penetrations of walls, ceilings, and floors. Comply with requirements for escutcheons specified in Division 22 Section "Common Work Results for Plumbing”.

L. Install downspouts in column webs wherever possible.

3.3 JOINT CONSTRUCTION

A. Basic piping joint construction requirements are specified in Division 22 Section "Common Work Results for Plumbing."

B. Hub-and-Spigot, Cast-Iron Soil Piping Gasketed Joints: Join according to CISPI's "Cast Iron Soil Pipe and Fittings Handbook" for compression joints.

C. Hubless Cast-Iron Soil Piping Coupled Joints: Join according to CISPI 310 and CISPI's "Cast Iron Soil Pipe and Fittings Handbook" for hubless-coupling joints.

3.4 HANGER AND SUPPORT INSTALLATION

A. Pipe hangers and supports are specified in Division 22 Section "Hangers and Supports for Plumbing Piping and Equipment." Install the following:

1. Vertical Piping: MSS Type 8 or Type 42, clamps.
2. Individual, Straight, Horizontal Piping Runs: According to the following:
    a. 100 Feet and Less: MSS Type 1, adjustable, steel clevis hangers.
    b. Longer Than 100 Feet: MSS Type 43, adjustable roller hangers.
    c. Longer Than 100 Feet, if Indicated: MSS Type 49, spring cushion rolls.
3. Multiple, Straight, Horizontal Piping Runs 100 Feet or Longer: MSS Type 44, pipe rolls. Support pipe rolls on trapeze.
4. Base of Vertical Piping: MSS Type 52, spring hangers.

B. Install supports according to Division 22 Section "Hangers and Supports for Plumbing Piping and Equipment."

C. Support vertical piping and tubing at base and at each floor.

D. Rod diameter may be reduced 1 size for double-rod hangers, with 3/8-inch minimum rods.

E. Install supports for vertical cast-iron soil piping every 15 feet.

F. Support piping and tubing not listed above according to MSS SP-69 and manufacturer's written instructions.

3.5 CONNECTIONS

A. Connect interior storm drainage piping to exterior storm drainage piping at a point 5’-0” outside the building. Use transition fitting to join dissimilar piping materials.

B. Connect storm drainage piping to roof drains and storm drainage specialties.

3.6 FIELD QUALITY CONTROL

A. During installation, notify authorities having jurisdiction at least 24 hours before inspection must be made. Perform tests specified below in presence of authorities having jurisdiction.

1. Roughing-in Inspection: Arrange for inspection of piping before concealing or closing-in after roughing-in.
2. Final Inspection: Arrange for final inspection by authorities having jurisdiction to observe tests specified below and to ensure compliance with requirements.

B. Reinspection: If authorities having jurisdiction find that piping will not pass test or inspection, make required corrections and arrange for reinspection.

C. Reports: Prepare inspection reports and have them signed by authorities having jurisdiction.

D. Test storm drainage piping according to procedures of authorities having jurisdiction or in absence of published procedures, as follows:

1. Test for leaks and defects in new piping and parts of existing piping that have been altered, extended, or repaired. If testing is performed in segments, submit separate report for each test, complete with diagram of portion of piping tested.
2. Leave uncovered and unconcealed new, altered, extended, or replaced drainage piping until it has been tested and approved. Expose work that was covered or concealed before it was tested.
3. Test Procedure: Test drainage piping on completion of roughing in. Close openings in piping system and fill with water to point of overflow, but not less than 10-foot head of water. From 15 minutes before inspection starts to completion of inspection, water level must not drop. Inspect joints for leaks.
4. Repair leaks and defects with new materials and retest piping, or portion thereof, until satisfactory results are obtained.
5. Prepare reports for tests and required corrective action.

3.7 CLEANING

A. Clean interior of piping. Remove dirt and debris as work progresses.

B. Protect drains during remainder of construction period to avoid clogging with dirt and debris and to prevent damage from traffic and construction work.

C. Place plugs in ends of uncompleted piping at end of day and when work stops.

END OF SECTION

SECTION 22 14 23 – STORM DRAINAGE PIPING SPECIALTIES

PART 1 - GENERAL

1.1 SUMMARY

A. Section Includes:

1. Roof drains.
2. Deck drains
3. Miscellaneous storm drainage piping specialties.
4. Cleanouts.
5. Flashing materials.

1.2 SUBMITTALS

A. Product Data: For each type of product indicated.

1.3 QUALITY ASSURANCE

A. Drainage piping specialties shall bear label, stamp, or other markings of specified testing agency.

PART 2 - PRODUCTS

2.1 ROOF AND DECK DRAINS

A. Cast-Iron, Large-Sump, General-Purpose Roof Drains **RD**:

1. Manufacturers: Subject to compliance with requirements, provide products by one of the following:
   a. Josam Company.
   b. Smith, Jay R. Mfg. Co.
   c. Tyler Pipe; Wade Div.
   d. Zurn Plumbing Products Group; Specification Drainage Operation.
2. Standard: ASME A112.6.4, for general-purpose roof drains.
3. Body Material: Cast iron.
4. Dimension of Body: Nominal 15-inch diameter.
5. Combination Flashing Ring and Gravel Stop: Not required.
6. Flow-Control Weirs: Not required.
7. Outlet Location: Bottom.
8. Outlet Size: As indicated on drawings.
9. Extension Collars: Not required.
10. Underdeck Clamp: Required.
11. Expansion Joint: Not required.

12. Dome Material: PE.

B. Deck Drains **DD**:

1. Manufacturers: Subject to compliance with requirements, provide products by one of the following:
   a. Josam Company.
   b. Smith, Jay R. Mfg. Co.
   c. Tyler Pipe; Wade Div.
   d. Zurn Plumbing Products Group; Specification Drainage Operation.
2. Standard: ASME A112.21.2, for drains.
3. Body Material: Cast iron.
4. Dimension of Body: Nominal 8 inch diameter.
5. Grate: Coated cast iron 8 inches square.
6. Outlet Location: Bottom.
7. Outlet Size: As indicated on drawings.

2.2 MISCELLANEOUS STORM DRAINAGE PIPING SPECIALTIES

A. Downspout Boots:

1. Description: Manufactured, ASTM A 48/A 48M, gray-iron casting, with strap or ears for attaching to building; 4 inch outlet; and shop-applied bituminous coating.
2. Size: Inlet size to match downspout and 4 inch outlet.

B. Conductor Nozzles for Emergency Drain:

1. Description: Nickel bronze body with threaded inlet and nickel bronze wall flange with mounting holes.
2. Size: Same as connected conductor.

2.3 CLEANOUTS

A. Floor Cleanouts **FCO**:

1. Manufacturers: Subject to compliance with requirements, provide products by one of the following:
   a. Josam Company.
   b. Smith, Jay R. Mfg. Co.
   c. Tyler Pipe; Wade Div.
   d. Zurn Plumbing Products Group; Specification Drainage Operation.
2. Standard: ASME A112.36.2M, for adjustable housing cleanouts.
3. Size: Same as connected branch.
4. Type: Adjustable housing.
5. Body or Ferrule Material: ABS.
6. Clamping Device: Required.

7. Outlet Connection: Inside calk.
8. Closure: Plastic plug.
9. Adjustable Housing Material: ABS Plastic with threads.
10. Frame and Cover Material and Finish: Scoriated Nickel-bronze, copper alloy.
11. Frame and Cover Shape: Round.
12. Top-Loading Classification: Medium Duty.

B. Test Tees:

1. Standard: ASME A112.36.2M and ASTM A 74, ASTM A 888, or CISPI 301, for cleanout test tees.
2. Size: Same as connected drainage piping.
3. Body Material: Hub-and-spigot, cast-iron soil-pipe T-branch or hubless, cast-iron soil- pipe test tee as required to match connected piping.
4. Closure Plug: raised head, brass.
5. Closure Plug Size: Same as or not more than one size smaller than cleanout size.

C. Wall Cleanouts **WCO**:

1. Manufacturers: Subject to compliance with requirements, provide products by one of the following:
   a. Josam Company.
   b. Smith, Jay R. Mfg. Co.
   c. Tyler Pipe; Wade Div.
   d. Zurn Plumbing Products Group; Specification Drainage Operation..
2. Standard: ASME A112.36.2M, for cleanouts. Include wall access.
3. Size: Same as connected drainage piping.
4. Body Material: Hubless, cast-iron soil-pipe test tee as required to match connected piping.
5. Closure: Countersunk, drilled-and-threaded brass plug.
6. Closure Plug Size: Same as or not more than one size smaller than cleanout size.
7. Wall Access: Round, flat, chrome-plated brass or stainless-steel cover plate with screw.

2.4 FLASHING MATERIALS

A. Copper Sheet: ASTM B 152/B 152M, 12 oz./sq. ft..

B. Zinc-Coated Steel Sheet: ASTM A 653/A 653M, with 0.20 percent copper content and 0.04- inch minimum thickness unless otherwise indicated. Include G90 hot-dip galvanized, mill- phosphatized finish for painting if indicated.

C. Elastic Membrane Sheet: ASTM D 4068, flexible, chlorinated polyethylene, 40-mil minimum thickness.

D. Fasteners: Metal compatible with material and substrate being fastened.

E. Metal Accessories: Sheet metal strips, clamps, anchoring devices, and similar accessory units required for installation; matching or compatible with material being installed.

F. Solder: ASTM B 32, lead-free alloy.

PART 3 - EXECUTION

3.1 INSTALLATION

A. Install roof drains at low points of roof areas according to roof membrane manufacturer's written installation instructions. Roofing materials are specified in Division 07 Sections.

1. Install flashing collar or flange of roof drain to prevent leakage between drain and adjoining roofing. Maintain integrity of waterproof membranes where penetrated.

2. Install expansion joints, if indicated, in roof drain outlets.

3. Position roof drains for easy access and maintenance.

B. Install downspout boots at grade with top 12 inches above grade. Secure to building wall.

C. Install conductor nozzles at exposed bottom of conductors where they spill onto grade.

D. Install cleanouts in aboveground piping and building drain piping according to the following instructions unless otherwise indicated:

1. Use cleanouts the same size as drainage piping up to NPS 4. Use NPS 4 for larger drainage piping unless larger cleanout is indicated.

2. Locate cleanouts at each change in direction of piping greater than 45 degrees.

3. Locate cleanouts at minimum intervals of 100 feet.

4. Locate cleanouts at base of each vertical soil and waste stack.

E. For floor cleanouts for piping below floors, install cleanout with top flush with finished floor.

F. For cleanouts located in concealed piping, install cleanout wall access covers, of types indicated, with frame and cover flush with finished wall.

G. Install test tees in vertical conductors and near floor.

H. Install wall cleanouts in vertical conductors. Install access door in wall if indicated.

I. Install sleeve flashing device with each conductor passing through floors with waterproof membrane.

3.2 CONNECTIONS

A. Comply with requirements for piping specified in Division 22 Sections. Drawings indicate general arrangement of piping, fittings, and specialties.

3.3 FLASHING INSTALLATION

A. Fabricate flashing from single piece of metal unless large pans, sumps, or other

drainage shapes are required. Join flashing according to the following if required:

1. Lead Sheets: Burn joints of 6.0-lb/sq. ft. lead sheets, 0.0938-inch thickness or thicker. Solder joints of 4.0-lb/sq. ft. lead sheets, 0.0625-inch thickness or thinner.
2. Copper Sheets: Solder joints of copper sheets.

B. Install sheet flashing on pipes, sleeves, and specialties passing through or embedded in floors and roofs with waterproof membrane.

1. Pipe Flashing: Sleeve type, matching the pipe size, with a minimum length of 10 inches and with skirt or flange extending at least 8 inches around pipe.
2. Sleeve Flashing: Flat sheet, with skirt or flange extending at least 8 inches around sleeve.
3. Embedded Specialty Flashing: Flat sheet, with skirt or flange extending at least 8 inches around specialty.

C. Set flashing on floors and roofs in solid coating of bituminous cement.

D. Secure flashing into sleeve and specialty clamping ring or device.

E. Fabricate and install flashing and pans, sumps, and other drainage shapes.

3.4 PROTECTION

A. Protect drains during remainder of construction period to avoid clogging with dirt or debris and to prevent damage from traffic or construction work.

B. Place plugs in ends of uncompleted piping at end of each day or when work stops.

END OF SECTION

SECTION 22 16 16 – NATURAL GAS PIPING

PART 1 - GENERAL

1.1 SUMMARY

A. Section Includes:

1. Aboveground pipe and fittings from meter and main regulator to building equipment.
2. Piping specialties and Art Room gas outlet.
3. Piping and tubing joining materials.
4. Valves.
5. Pressure regulators.

1.2 REFERENCE STANDARDS

A. The latest published edition of a reference shall be applicable to this Project unless identified by a specific edition date.

B. All reference amendments adopted prior to the effective date of this Contract shall be applicable to this Project.

C. All materials, installation and workmanship shall comply with the applicable requirements and standards addressed within the following references:

1. 2009 Edition of the International Fuel Gas Code.
2. Latest edition of NFPA 54.

1.3 PERFORMANCE REQUIREMENTS

A. Minimum Operating-Pressure Ratings:

1. Piping and Valves: 100 psig minimum unless otherwise indicated.
2. Service Regulators: 100 psig minimum unless otherwise indicated.

B. Natural-Gas System Pressure within Buildings: 2.0 psig or less

1.4 SUBMITTALS

A. Product Data: For each type of product indicated.

B. Welding certificates.

C. Field quality-control reports.

D. Operation and maintenance data.

1.5 QUALITY ASSURANCE

A. Steel Support Welding Qualifications: Qualify procedures and personnel according to AWS D1.1/D1.1M, "Structural Welding Code - Steel."

B. Electrical Components, Devices, and Accessories: Listed and labeled as defined in NFPA 70, by a qualified testing agency, and marked for intended location and application.

C. Manufacturer Qualifications: The manufacturer providing material or equipment specified in this section must, for the past five (5) years, have been regularly engaged in the manufacture of material or equipment similar in type to that required for this Project. Such material or equipment provided by the manufacturer must have been in satisfactory service for not less than five (5) years.

D. Installer Qualifications: The entity performing the work of this section must, within the last five (5) consecutive years prior to the bid opening have successfully completed in a timely fashion at least three (3) projects similar in scope, size and type to the required work.

E. Conformance to National Fuel Gas Code.

F. Material and installation requirements shall follow NFPA 54, state and local gas company codes.

G. Conformance to ANSI B31.

H. Gas regulators shall be AGA rated.

1.6 DELIVERY, STORAGE and HANDLING

A. Accept valves on Site in shipping containers with labeling in place, inspect for damage and store with a minimum of handling. Store plastic piping under cover out of direct sunlight. Do not store materials directly on the ground.

B. Protect piping systems from entry of foreign materials by temporary covers, completing sections of the work and isolating parts of completed system.

PART 2 - PRODUCTS

2.1 GENERAL

A. All materials shall meet or exceed all applicable referenced standards, federal, state and local requirements, and conform to codes and ordinances of authorities having jurisdiction.

2.2 PIPES, TUBES, AND FITTINGS

A. Steel Pipe: ASTM A 53/A 53M, black steel, Schedule 40, Type E or S, Grade B.

1. Malleable-Iron Threaded Fittings: ASME B16.3, Class 150, standard pattern.

2. Unions: ASME B16.39, Class 150, malleable iron with brass-to-iron seat, ground joint, and threaded ends.

2.3 JOINING MATERIALS

A. Joint Compound and Tape: Suitable for natural gas.

2.4 GAS VALVES

A. All valves shall be designed, manufactured and approved for natural gas service.

B. Line Shut-off Valves sizes 2 inches and smaller shall be iron body lubricated plug valve conforming to ASTM-A-126, U.L. Listed and A.G.A. Approved for natural gas service with threaded ends, wrench operation, rated for 200 WOG service pressure and –20 to 200 degrees F., manufactured by Nordstrom Model 142 or approved equal by Resun or McDonald, A. Y. Mfg. Co.

C. Line Shut-off Valves sizes 2½ inches and larger shall be iron body lubricated plug valve conforming to ASTM-A-126, U.L. Listed and A.G.A. Approved for natural gas service with flanged ends, wrench operation, rated for 200 WOG service pressure and –20 to 200 degrees F., manufactured by Nordstrom Model 143 or approved equal by Resun or McDonald, A. Y. Mfg. Co.

D. Appliance/Equipment Shut-off Valves at local connections sizes 2 inches and smaller shall be bronze body, full port ball or butterfly type, U.L. Listed and A.G.A. Approved for natural gas service with threaded ends, quarter turn lever handle operation, rated for 175 W.O.G. service pressure and 30 to 275 degrees F., manufactured by Nibco Model T585-70-UL or approved equal by Milwaukee or Apollo.

E. Manual Emergency Shut-off Valves sizes 2 inches and smaller shall be bronze body, full port ball or butterfly type, U.L. Listed and A.G.A. Approved for natural gas service with threaded ends, quarter turn lever handle operation, rated for 175 W.O.G. service pressure and 30 to 275 degrees F., manufactured by Nibco Model T585-70-UL or approved equal by Milwaukee or Apollo.

F. Automatic Emergency Shut-off Valves shall be U.L. Listed F.M. Approved for natural gas service, 2-way electrically tripped solenoid type; fail safe closed; manual reset; Type 1 solenoid enclosure; NBR seals and disc; stainless steel core tube and springs; copper coil; manufactured by ASCO Red Hat Series 8044 or approved equal by Honeywell or Jefferson.

2.5 PRESSURE REGULATORS

A. General Requirements:

1. Single stage and suitable for natural gas.
2. Steel jacket and corrosion-resistant components.
3. Elevation compensator.
4. End Connections: Threaded for regulators NPS 2 and smaller.

B. Appliance Pressure Regulators: Comply with ANSI Z21.18.

1. Manufacturers: Subject to compliance with requirements, provide products by one of the following:
   a. Eaton Corporation; Controls Div.
   b. Harper Wyman Co.
   c. Maxitrol Company.
   d. Itron
2. Body and Diaphragm Case: Die-cast aluminum.
3. Springs: Zinc-plated steel; interchangeable.
4. Diaphragm Plate: Zinc-plated steel.
5. Seat Disc: Nitrile rubber.
6. Seal Plug: Ultraviolet-stabilized, mineral-filled nylon.
7. Factory-Applied Finish: Minimum three-layer polyester and polyurethane paint finish.

8. Atmospheric Vent: Factory installed.
9. Maximum Inlet Pressure: 2 psig

C. Line Pressure Regulators: Comply with ANSI Z21.80.

1. Manufacturers: Subject to compliance with requirements, provide products by one of the following:
   a. Belgas
   b. Eaton Corporation; Controls Div.
   c. Harper Wyman Co.
   d. Maxitrol Company.
2. Body and Diaphragm Case: Cast iron or die-cast aluminum.
3. Springs: Zinc-plated steel; interchangeable.
4. Diaphragm Plate: Zinc-plated steel.
5. Seat Disc: Nitrile rubber resistant to gas impurities, abrasion, and deformation at the valve port.
6. Orifice: Aluminum; interchangeable.
7. Seal Plug: Ultraviolet-stabilized, mineral-filled nylon.
8. Single-port, self-contained regulator with orifice no larger than required at maximum pressure inlet, and no pressure sensing piping external to the regulator.
9. Pressure regulator shall maintain discharge pressure setting downstream, and not exceed 120 percent of design discharge pressure at shutoff.
10. Overpressure Protection Device: Factory mounted on pressure regulator.
11. Atmospheric Vent: Factory- or field-installed, stainless-steel screen in opening if not connected to vent piping.
12. Maximum Inlet Pressure: 5 psig
13. Suitable for outdoor use to minus 40 F ambient temperature.

2.6 DIELECTRIC UNIONS

A. Dielectric Unions:

1. Manufacturers: Subject to compliance with requirements, provide products by one of the following:
   a. Hart Industries International, Inc.
   b. McDonald, A. Y. Mfg. Co.
   c. Watts Regulator Co.; a division of Watts Water Technologies, Inc.
   d. Wilkins; a Zurn company.
2. Description:
   a. Standard: ASSE 1079.
   b. Pressure Rating: 125 psig at 180 deg F.

c. End Connections: Solder-joint copper alloy and threaded ferrous.

PART 3 - EXECUTION

3.1 INDOOR PIPING INSTALLATION

A. Comply with NFPA 54 for installation and purging of natural-gas piping.

B. Drawing plans, schematics, and diagrams indicate general location and arrangement of piping systems. Indicated locations and arrangements are used to size pipe and calculate friction loss, expansion, and other design considerations. Install piping as indicated unless deviations to layout are approved on Coordination Drawings.

C. Arrange for pipe spaces, chases, slots, sleeves, and openings in building structure during progress of construction, to allow for mechanical installations.

D. Install piping in concealed locations (as allowed per code) unless otherwise indicated and except in equipment rooms and service areas.

E. Install piping indicated to be exposed and piping in equipment rooms and service areas at right angles or parallel to building walls. Diagonal runs are prohibited unless specifically indicated otherwise.

F. Install piping above accessible ceilings to allow sufficient space for ceiling panel removal.

G. Locate valves for easy access.

H. Install piping free of sags and bends.

I. Install fittings for changes in direction and branch connections.

J. Verify final equipment locations for roughing-in.

K. Comply with requirements in Sections specifying gas-fired appliances and equipment for roughing-in requirements.

L. Drips and Sediment Traps: Install drips at points where condensate may collect, including service-meter outlets. Locate where accessible to permit cleaning and emptying. Do not install where condensate is subject to freezing.

1. Construct drips and sediment traps using tee fitting with bottom outlet plugged or capped. Use nipple a minimum length of 3 pipe diameters, but not less than 3 inches long and same size as connected pipe. Install with space below bottom of drip to remove plug or cap.

M. Extend relief vent connections for service regulators, line regulators, and overpressure protection devices to outdoors and terminate with weatherproof vent cap.

N. Conceal pipe installations in walls, pipe spaces, utility spaces, above ceilings, unless indicated to be exposed to view. Pipe concealed in walls and partitions shall be installed in an approved chase or casing. Piping in concealed locations shall not have unions, tubing fittings, right and left couplings, bushings, compression couplings, nor swing joints made by combinations of fittings. Tubing joined by brazing is allowed, as are fittings listed for use in concealed locations.

O. Use eccentric reducer fittings to make reductions in pipe sizes. Install fittings with level side down.

P. Connect branch piping from top or side of horizontal piping.

Q. Install unions in pipes NPS 2 and smaller, adjacent to each valve, at final connection to each piece of equipment.

R. Do not use natural-gas piping as grounding electrode.

S. Install strainer on inlet of each line-pressure regulator and automatic or electrically operated valve.

T. Install pressure gage downstream from each line regulator. Pressure gages are specified in Division 23 Section "Meters and Gages for HVAC Piping."

U. Install sleeves for piping penetrations of walls, ceilings, and floors, concrete walls or slabs. Comply with requirements for sleeves specified in Division 23 Section "Common Work Results for HVAC."

V. Install escutcheons for piping penetrations of walls, ceilings, and floors. Comply with requirements for escutcheons specified in Division 23 Section "Common Work Results for HVAC."

3.2 VALVE INSTALLATION

A. Install manual gas shutoff valve for each gas appliance.

B. Install regulators and overpressure protection devices with maintenance access space adequate for servicing and testing.

C. Install cooking appliance shunt trip valve per valve manufacturer's instructions and in coordination with kitchen equipment contractor.

3.3 PIPING JOINT CONSTRUCTION

A. Ream ends of pipes and tubes and remove burrs.

B. Remove scale, slag, dirt, and debris from inside and outside of pipe and fittings before assembly.

C. Threaded Joints:

1. Thread pipe with tapered pipe threads complying with ASME B1.20.1.
2. Cut threads full and clean using sharp dies.
3. Ream threaded pipe ends to remove burrs and restore full inside diameter of pipe.
4. Apply appropriate tape or thread compound to external pipe threads unless dryseal threading is specified.
5. Damaged Threads: Do not use pipe or pipe fittings with threads that are corroded or damaged. Do not use pipe sections that have cracked or open welds.

3.4 HANGER AND SUPPORT INSTALLATION

A. Comply with requirements for pipe hangers and supports specified in Division 22 Section "Hangers and Supports for Plumbing Piping and Equipment."

3.5 CONNECTIONS

A. Connect to utility's gas main after meter and regulator.

B. Install natural-gas piping electrically continuous, and bonded to gas appliance equipment grounding conductor of the circuit powering the appliance according to NFPA 70.

C. Install piping adjacent to appliances to allow service and maintenance of appliances.

D. Connect piping to appliances using manual gas shutoff valves and unions. Install valve within 72 inches of each gas-fired appliance and equipment. Install union between valve and appliances or equipment.

E. Sediment Traps: Install tee fitting with capped nipple in bottom to form drip, as close as practical to inlet of each appliance.

3.6 LABELING AND IDENTIFYING

A. Comply with requirements in Division 23 Section "Identification for HVAC Piping and Equipment" for piping and valve identification.

3.7 FIELD QUALITY CONTROL

A. Test, inspect, and purge natural gas according to NFPA 54 and authorities having jurisdiction.

B. Natural-gas piping will be considered defective if it does not pass tests and inspections.

C. Prepare test and inspection reports.

3.8 INDOOR PIPING SCHEDULE

A. Aboveground, branch & distribution piping NPS 2 and smaller shall the following:

1. Steel pipe with malleable-iron fittings and threaded joints.

2. EXCEPTIONS:

a. All exposed piping 1½ inches and smaller located within areas utilized as return air plenums shall have welded joints with Schedule 40 socket welded forged steel fittings conforming to ASME B16.11.

b. All exposed piping 1½ inches and smaller serving laboratories from main natural gas riser to each emergency shut-off valve shall have welded joints with Schedule 40 socket welded forged steel fittings conforming to ASME B16.11.

B. Aboveground, branch & distribution piping larger than NPS 2 shall the following:

1. Steel pipe with wrought-steel fittings and welded joints.

3.9 OUTDOOR PIPING SCHEDULE

A. Aboveground, NPS 2 and smaller shall be the following:

1. Steel pipe with malleable-iron fittings and threaded joints.

B. Aboveground, larger than NPS 2 shall the following:

1. Steel pipe with wrought-steel fittings and welded joints.

3.10 PAINTING

A. Comply with requirements in Section 099100 Painting for painting exterior natural-gas piping (ferrous metal).

B. Paint exposed, exterior metal piping, valves, regulators, and piping specialties, except

components, with factory-applied paint or protective coating.

1. Gloss finish.
2. Color - Yellow.

C. Damage and Touchup: Repair marred and damaged factory-applied finishes with materials and by procedures to match original factory finish.

END OF SECTION

SECTION 22 33 33 – INSTANTANEOUS ELECTRIC, DOMESTIC WATER HEATERS

PART 1 - GENERAL

1.1 RELATED DOCUMENTS

A. Section 22 05 18 - ESCUTCHEONS FOR PLUMBING PIPING.

B. Section 22 05 23 - VALVES FOR PLUMBING PIPING.

C. Section 22 11 16 - DOMESTIC WATER PIPING.

1.2 SUMMARY

A. Section Includes:

1. Flow-control, electric, tankless, water heaters.

2. Domestic-water heater accessories.

1.3 SUBMITTALS

A. Product Data: For each type and size of domestic-water heater indicated. Include rated capacities, operating characteristics, electrical characteristics, and furnished specialties and accessories.

B. Shop Drawings:

1. Wiring Diagrams: For power, signal, and control wiring.

C. Product Certificates: For each type of tankless, electric, domestic-water heater, from manufacturer.

D. Domestic-Water Heater Labeling: Certified and labeled by testing agency acceptable to authorities having jurisdiction.

E. Warranty: Sample of special warranty.

F. Operation and Maintenance Data: For electric, domestic-water heaters to include in emergency, operation, and maintenance manuals.

1.4 QUALITY ASSURANCE

A. Electrical Components, Devices, and Accessories: Listed and labeled as defined in NFPA 70, by a qualified testing agency, and marked for intended location and application.

Compliance with ASHRAE/IESNA 90.1 is required by LEED 2009, LEED v4, IgCC, ASHRAE 189.1, and Green Globes and may be required even when they do not apply.

B. ASHRAE/IESNA Compliance: Applicable requirements in ASHRAE/IESNA 90.1.

C. NSF Compliance: Fabricate and label equipment components that will be in contact with potable water to comply with NSF 61 Annex G, "Drinking Water System Components - Health Effects."

1.5 COORDINATION

A. Coordinate sizes and locations with actual equipment provided.

1.6 WARRANTY

A. Special Warranty: Manufacturer's standard form in which manufacturer agrees to repair or replace components of electric, domestic-water heaters that fail in materials or workmanship within specified warranty period.

1. Failures include, but are not limited to, the following:

a. Faulty operation of controls.

b. Deterioration of metals, metal finishes, and other materials beyond normal use.

2. Warranty Periods: From date of Substantial Completion.

a. Electric, Tankless, Domestic-Water Heaters: Five year(s).

PART 2 - PRODUCTS

2.1 ELECTRIC, TANKLESS, DOMESTIC-WATER HEATERS

A. Flow-Control, Electric, Tankless, Domestic-Water Heaters:

1. Manufacturers: Subject to compliance with requirements, provide products by the following

a. Eemax

b. EcoSmart

c. Bosch

d. Rheem

e. Or approved equal

2. Standard: UL 499 for electric, tankless, domestic-water heater heating appliance.

3. Construction: Copper piping or tubing complying with NSF 61 Annex G barrier materials for potable water, without storage capacity.

a. Connections: ASME B1.20.1 pipe thread

b. Minimum Dynamic Operating Pressure: 35 Psig

c. Maximum Dynamic Operating Pressure : 150 psig

d. Heating Element: Ni-Chrome

e. Temperature Control: Flow-control fitting.

4. Performance:

a. On demand hot water. Flow switch activates heater only on demand

b. High temperature limit switch with automatic reset

c. Flow restricting aerator ensures proper temperature rise.

d. Ni-Chrome element

5. Support: Bracket for wall mounting.

6. Capacity and Characteristics:
    a. Flow Rate: 0.2 GPM to 1.0 GPM as indicated on the contract drawings
    b. Maximum Temperature Setting: 110 ºF
    c. Power Demand: 1.44 Kw to 8.3 Kw as indicated on the contract drawings
    d. Electrical Characteristics:
        1) Volts: 120.
        2) Phases: Single
        3) Hertz: 60.
        4) Full-Load Amperes: 20

2.2 DOMESTIC-WATER HEATER ACCESSORIES

A. Shock Absorbers: ASSE 1010 or PDI-WH 201, Size A water hammer arrester.

B. Domestic-Water Heater Mounting Brackets: Manufacturer's factory-fabricated steel bracket for wall mounting, capable of supporting domestic-water heater.

2.3 SOURCE QUALITY CONTROL

A. Factory Tests: Test and inspect domestic-water heaters specified to be ASME-code construction, according to ASME Boiler and Pressure Vessel Code.

B. Hydrostatically test commercial domestic-water heaters to minimum of one and one-half times pressure rating before shipment.

C. Electric, domestic-water heaters will be considered defective if they do not pass tests and inspections.

D. Prepare test and inspection reports.

PART 3 - EXECUTION

3.1 DOMESTIC-WATER HEATER INSTALLATION

A. Electric, Tank-less, Domestic-Water Heater Mounting: Install electric, tank-less, domestic-water heaters at least 18 inches above floor on wall bracket.

1. Maintain manufacturer's recommended clearances.
2. Arrange units so controls and devices that require servicing are accessible.
3. Place and secure anchorage devices. Use setting drawings, templates, diagrams, instructions, and directions furnished with items to be embedded.
4. Install anchor bolts to elevations required for proper attachment to supported equipment.
5. Anchor domestic-water heaters to substrate.

B. Install electric, domestic-water heaters level and plumb, according to layout drawings, original design, and referenced standards. Maintain manufacturer's recommended clearances. Arrange units so controls and devices needing service are accessible.

1. Install shutoff valves on domestic-water-supply piping to domestic-water heaters and on domestic-hot-water outlet piping. Comply with requirements for shutoff valves specified in Section 220523 "Valves for Plumbing Piping,"

3.2 CONNECTIONS

A. Comply with requirements for piping specified in Section 221116 "Domestic Water Piping." Drawings indicate general arrangement of piping, fittings, and specialties.

B. Where installing piping adjacent to electric, domestic-water heaters, allow space for service and maintenance of water heaters. Arrange piping for easy removal of domestic-water heaters.

3.3 IDENTIFICATION

A. Identify system components. Comply with requirements for identification specified in Section 220553 "Identification for Plumbing Piping and Equipment."

3.4 FIELD QUALITY CONTROL

A. Perform tests and inspections.

1. Manufacturer's Field Service: Engage a factory-authorized service representative to inspect components, assemblies, and equipment installations, including connections, and to assist in testing.

2. Leak Test: After installation, charge system and test for leaks. Repair leaks and retest until no leaks exist.

3. Operational Test: After electrical circuitry has been energized, start units to confirm proper operation.

4. Test and adjust controls and safeties. Replace damaged and malfunctioning controls and equipment.

B. Prepare test and inspection reports.

3.5 DEMONSTRATION

A. Provide instruction for the City’s maintenance personnel showing how to adjust, operate, and maintain tankless, electric, domestic-water heaters.

END OF SECTION

SECTION 22 42 13.13 – COMMERCIAL WATER CLOSET AND URINAL

PART 1 - GENERAL

1.1 RELATED DOCUMENTS

A. Section 07 92 00 - JOINT SEALANTS.

B. Section 22 05 18 - ESCUTCHEONS FOR PLUMBING PIPING.

C. Section 22 05 23 - VALVES FOR PLUMBING PIPING.

D. Section 22 07 19 - PLUMBING PIPING INSULATION.

E. Section 22 11 16 - DOMESTIC WATER PIPING.

F. Section 22 13 16 - SANITARY WASTE AND VENT PIPING.

1.2 SUMMARY

A. Section Includes:

1. Water Closet
2. Flushometer valves.
3. Toilet seats.
4. Supports.

1.3 DEFINITIONS

A. Effective Flush Volume: Average of two reduced flushes and one full flush per fixture.

B. Remote Water Closet: Located more than 30 feet from other drain line connections or fixture and where less than 1.5 drainage fixture units are upstream of the drain line connection.

1.4 SUBMITTALS

A. Product Data: For each type of product.

1. Include construction details, material descriptions, dimensions of individual components and profiles, and finishes for water closets.
2. Include rated capacities, operating characteristics, electrical characteristics, and furnished specialties and accessories.

B. Shop Drawings: Include diagrams for power, signal, and control wiring.

C. Operation and Maintenance Data: For flushometer valves to include in operation and maintenance manuals.

D. Furnish extra materials that are packaged with protective covering for storage and identified with labels describing contents.

1. Flushometer-Valve Repair Kits: Equal to 10 percent of amount of each type installed, but no fewer than 6 of each type.

PART 2 - PRODUCTS

2.1 WATER CLOSET

A. Water Closets: top spud.

1. American Standard “Vitreous China AFWALL Millenium Flowise Elongated Flushometer Toilet model 3351.101 Elongated bowl only , top spud or Approved equal
    a. Standards: ASME A112.19.2/CSA B45.1
    b. Material: Vitreous china.
    c. Type: Powerful direct-fed siphon jet action
    d. Style: Flushometer valve.
    e. Rim Contour: Elongated bowl
    f. Water Consumption: **1.28 gal.** per flush.
    g. Spud Size and Location: NPS 1-1/2 inlet spud
2. Toilet Seat: American Standard # 5905.100, BEMIS 1955SSCT 000, Kohler K-4731 Extra heavy duty open front less cover or approved equal
3. Water-Closet Mounting Height: Top Seat Height 18”

2.2 FLUSHOMETER VALVES

A. Lever-Handle, Diaphragm Flushometer Valves

1. HET High Efficiency Toilet Royal Flushometer model 111-1.28, Kohler K-76321, Zurn Z6000AV-HET or Approved Equal
2. Standard: ASME A112.19.6 and ASSE 1037.
3. Minimum Pressure Rating: 125 psig
4. Features:
    a. Permex synthetic rubber diaphragm with dual filtered fixed bypass
    b. ADA complained metal oscillating Non-Hold-Open handle with triple seal handle packing
    c. 1” IPS screwdriver Bak-Chek angle stop with free spinning vandal resistant stop cap
    d. Adjustable Tailpiece
    e. High Back Pressure Vacuum Breaker Flush Connection with One-piece Bottom Hex Coupling Nut
    f. Spud Coupling and Flange for 1-1/2 “ Top Spud
    g. Sweat Solder Adapter with Cover Tube & Cast Wall Flange with Set Screw
    h. High Copper, Low zinc Brass Castings for Dezincification Resistance
    i. Non-Hold-Open Handle, Fixed Metering Bypass and No External Volume Adjustment to Ensure Water Conservation
    j. Flush accuracy controlled by CID technology

k. Diaphragm, handle packing, stop seat and vacuum breaker molded from PERMEX rubber compound for Chloramine resistance

l. Valve body, cover, tailpiece and control stop shall be in conformance with ASTM Alloy Classification for semi-red brass.

5. Consumption: 1.28 gal. per flush.

2.3 TOILET SEATS

A. Toilet Seats:

1. American Standard # 5905.100, BEMIS 1955SSCT 000, Kohler K-4731 Extra heavy duty open front less cover or approved equal

2. Type: Commercial Extra Heavy duty

3. Shape: Elongated rim, open front

4. Hinge: Self-sustaining

5. Hinge Material: Noncorroding metal.

6. Color: White

2.4 SUPPORTS

A. Water Closet Carrier:

1. Standard: ASME A112.6.1M.

2. Carrier: The contractor shall provide carrier fittings as required and provide suitable reinforcement for wall support.

3. Description: The Contractor shall furnish and install any additional piping for waste-fitting assembly, as required to match drainage piping material and arrangement with faceplates, couplings gaskets, and feet; bolts and hardware matching fixture

PART 3 - EXECUTION

3.1 EXAMINATION

A. Examine roughing-in of water supply and sanitary drainage and vent piping systems to verify actual locations of piping connections before water-closet installation.

B. Examine walls and floors for suitable conditions where water closets will be installed.

C. Proceed with installation only after unsatisfactory conditions have been corrected.

3.2 INSTALLATION

A. Water-Closet Installation:

1. Install level and plumb according to roughing-in drawings.

2. Install floor-mounted water closets on bowl-to-drain connecting fitting attachments to piping or building substrate.

3. Install accessible, wall-mounted water closets at mounting height for handicapped/elderly, according to ANSI A117.1-2009.

B. Support Installation:

1. Use carrier supports with waste-fitting assembly and seal.
2. Install wall-mounted, back-outlet water-closet supports with waste-fitting assembly and waste-fitting seals; and affix to building substrate.

C. Flushometer-Valve Installation:

1. Install flushometer-valve, water-supply fitting on each supply to each water closet.
2. Attach supply piping to supports or substrate within pipe spaces behind fixtures.
3. Install lever-handle flushometer valves for accessible water closets with handle mounted on open side of water closet.

D. Install toilet seats on water closets.

E. Wall Flange and Escutcheon Installation:

1. Install wall flanges or escutcheons at piping wall penetrations in exposed, finished locations and within cabinets and millwork.
2. Install deep-pattern escutcheons if required to conceal protruding fittings.
3. Comply with escutcheon requirements specified in Section 220518 "Escutcheons for Plumbing Piping."

F. Joint Sealing:

1. Seal joints between water closets and walls and floors using sanitary-type, one-part, mildew-resistant silicone sealant.
2. Match sealant color to water-closet color.
3. Comply with sealant requirements specified in Section 079200 "Joint Sealants."

G. Urinal Installation:

1. Install urinals level and plumb according to roughing-in drawings.
2. Install wall-hung, back-outlet urinals onto waste fitting seals and attached to supports.
3. Install wall-hung, bottom-outlet urinals with tubular waste piping attached to supports.
4. Install accessible, wall-mounted urinals at mounting height for the handicapped/elderly.

H. Support Installation:

1. Install supports, affixed to building substrate, for wall-hung urinals.
2. Use off-floor carriers with waste fitting and seal for back-outlet urinals.
3. Use carriers without waste fitting for urinals with tubular waste piping.
4. Use chair-type carrier supports with rectangular steel uprights for accessible urinals.

I. Flushometer-Valve Installation:

1. Install flushometer-valve water-supply fitting on each supply to each urinal.
2. Attach supply piping to supports or substrate within pipe spaces behind fixtures.
3. Install lever-handle flushometer valves for accessible urinals with handle mounted on open side of compartment.

J. Wall Flange and Escutcheon Installation:

1. Install wall flanges or escutcheons at piping wall penetrations in exposed, finished locations.
2. Install deep-pattern escutcheons if required to conceal protruding fittings.
3. Comply with escutcheon requirements specified in Section 220518 "Escutcheons for Plumbing Piping."

K. Joint Sealing:

1. Seal joints between urinals and walls and floors using sanitary-type, one-part, mildew-resistant silicone sealant.
2. Match sealant color to urinal color.
3. Comply with sealant requirements specified in Section 079200 "Joint Sealants."

3.3 CONNECTIONS

A. Connect water closets with water supplies and soil, waste, and vent piping. Use size fittings required to match water closets.

B. Comply with water piping requirements specified in Section 221116 "Domestic Water Piping."

C. Comply with soil and waste piping requirements specified in Section 221316 "Sanitary Waste and Vent Piping."

D. Where installing piping adjacent to water closets, allow space for service and maintenance.

E. Operate and adjust urinals and controls. Replace damaged and malfunctioning urinals, fittings, and controls.

F. Adjust water pressure at flushometer valves to produce proper flow.

3.4 ADJUSTING

A. Operate and adjust water closet and urinal and controls. Replace damaged and malfunctioning water closets, fittings, and controls.

B. Adjust water pressure at flushometer valves to produce proper flow.

3.5 CLEANING AND PROTECTION

A. Clean water closets and fittings with manufacturers' recommended cleaning methods and materials.

B. Install protective covering for installed water closets and fittings.

C. Do not allow use of water closets for temporary facilities unless approved in writing by the Engineer.

D. Clean urinals and fittings with manufacturers' recommended cleaning methods and materials.

E. Install protective covering for installed urinals and fittings.

F. Do not allow use of urinals for temporary facilities unless approved in writing by the Engineer.

END OF SECTION

SECTION 22 42 13.16 – COMMERCIAL WATER CLOSET AND URINAL

PART 1 - GENERAL

1.1 RELATED DOCUMENTS

A. Section 07 92 00 - JOINT SEALANTS.

B. Section 22 05 18 - ESCUTCHEONS FOR PLUMBING PIPING.

C. Section 22 05 23 - VALVES FOR PLUMBING PIPING.

G. Section 22 07 19 " PLUMBING PIPING INSULATION.

D. Section 22 11 16 " DOMESTIC WATER PIPING.

E. Section 22 13 16 " SANITARY WASTE AND VENT PIPING.

1.2 SUMMARY

A. Section Includes:

1. Urinal
2. Flushometer valves.
3. Supports.

1.3 DEFINITIONS

A. Effective Flush Volume: Average of two reduced flushes and one full flush per fixture.

1.4 SUBMITTALS

A. Product Data: For each type of product.

1. Include construction details, material descriptions, dimensions of individual components and profiles, and finishes for water closets.
2. Include rated capacities, operating characteristics, electrical characteristics, and furnished specialties and accessories.

B. Shop Drawings: Include diagrams for power, signal, and control wiring.

C. Operation and Maintenance Data: For flushometer valves to include in operation and maintenance manuals.

D. Furnish extra materials that are packaged with protective covering for storage and identified with labels describing contents.

1. Flushometer-Valve Repair Kits: Equal to 10 percent of amount of each type installed, but no fewer than 6 of each type.

PART 2 - PRODUCTS

2.1 URINAL

A. Urinal

1. American Standard WASHBROOK FlowWise UNIVERSAL URINAL model 6590.001, Toto UT447E-01, Kohler - 4972-ET-0 Universal Top Spud or approved equal

2. Fixture:

   a. Standards: Urinals shall conform to ASME A112.19.2M or CSA B45.1. Urinals shall conform to the hydraulic performance requirements of ASME A112.19.6, CSA B45.1

   b. Material: Vitreous china.

   c. Water Consumption: High Efficiency , Low Consumption Operates at 0.50 gpf

   d. Elongated 14” rim from finished wall.

   e. Extended sides for privacy

   f. 2 wall hangers and Strainer

   g. Spud Size and Location: ¾” inlet spud

   h. Outlet Size and Location: NPS 2 inside

   i. Nominal Dimensions: 14-1/8” X 18-7/8” X 26-1/8”

   j. Color: White

2.2 URINAL FLUSHOMETER VALVES

A. Lever-Handle, Diaphragm Flushometer Valves

1. Royal Model 186-0.25 High Efficiency HEU Flushometer, Solan Model 8186-0.25 High Efficiency HEU, Zurn Model Z5758.207.00 or approved equal

2. Standard: Shall conform to the hydraulic performance requirements of ASME A112.19.6

3. Feature:

   a. Dual Linear Filtered Bypass Diaphragm

   b. ADA compliant Metal Oscillating Non-Hold-Open Handle with Triple Seal Handle Packing

   c. 3/4” IPS screwdriver Bak-Chek angle stop with free spinning vandal resistant stop cap

   d. Adjustable Tailpiece

   e. High Back Pressure Vacuum Breaker Flush Connection with One-piece Bottom Hex Coupling Nut

   f. Spud Coupling and Flange for 3/4 “ Top Spud

   g. Sweat Solder Adapter with Cover Tube & Cast Wall Flange with Set Screw

   h. High Copper, Low zinc Brass Castings for Dezincification Resistance

   i. Non-Hold-Open Handle, Fixed Metering Bypass and No External Volume Adjustment to Ensure Water Conservation

   j. Flush accuracy controlled by CID technology

   k. Diaphragm, handle packing, stop seat and vacuum breaker molded from PERMEX rubber compound for Chloramine resistance

l. Valve body, cover, tailpiece and control stop shall be in conformance with ASTM Alloy Classification for semi-red brass.

2.3 SUPPORTS

1. Carrier: The contractor shall provide carrier fittings as required and provide suitable reinforcement for wall support.

2. Description: The Contractor shall furnish and install any additional piping for Supply to urinal, Supply to flush valve, waste-fitting assembly, as required to match drainage piping material and arrangement with flexible pipe, sealant, couplings, gaskets, bolts and hardware matching fixture.

PART 3 - EXECUTION

3.1 EXAMINATION

A. Examine roughing-in of water supply and sanitary drainage and vent piping systems to verify actual locations of piping connections before water-closet installation.

B. Examine walls and floors for suitable conditions where water closets will be installed.

C. Proceed with installation only after unsatisfactory conditions have been corrected.

3.2 INSTALLATION

A. Water-Closet Installation:

1. Install level and plumb according to roughing-in drawings.

2. Install floor-mounted water closets on bowl-to-drain connecting fitting attachments to piping or building substrate.

3. Install accessible, wall-mounted water closets at mounting height for handicapped/elderly, according to ANSI A117.1.

B. Support Installation:

1. Use carrier supports with waste-fitting assembly and seal.

2. Install wall-mounted, back-outlet water-closet supports with waste-fitting assembly and waste-fitting seals; and affix to building substrate.

C. Flushometer-Valve Installation:

1. Install flushometer-valve, water-supply fitting on each supply to each water closet.

2. Attach supply piping to supports or substrate within pipe spaces behind fixtures.

3. Install lever-handle flushometer valves for accessible water closets with handle mounted on open side of water closet.

D. Install toilet seats on water closets.

E. Wall Flange and Escutcheon Installation:

1. Install wall flanges or escutcheons at piping wall penetrations in exposed, finished locations and within cabinets and millwork.

2. Install deep-pattern escutcheons if required to conceal protruding fittings.

3. Comply with escutcheon requirements specified in Section 220518 "Escutcheons for Plumbing Piping."

F. Joint Sealing:

1. Seal joints between water closets and walls and floors using sanitary-type, one-part, mildew-resistant silicone sealant.

2. Match sealant color to water-closet color.

3. Comply with sealant requirements specified in Section 079200 "Joint Sealants."

G. Urinal Installation:

1. Install urinals level and plumb according to roughing-in drawings.

2. Install wall-hung, back-outlet urinals onto waste fitting seals and attached to supports.

3. Install wall-hung, bottom-outlet urinals with tubular waste piping attached to supports.

4. Install accessible, wall-mounted urinals at mounting height for the handicapped/elderly.

H. Support Installation:

1. Install supports, affixed to building substrate, for wall-hung urinals.

2. Use off-floor carriers with waste fitting and seal for back-outlet urinals.

3. Use carriers without waste fitting for urinals with tubular waste piping.

4. Use chair-type carrier supports with rectangular steel uprights for accessible urinals.

I. Flushometer-Valve Installation:

1. Install flushometer-valve water-supply fitting on each supply to each urinal.

2. Attach supply piping to supports or substrate within pipe spaces behind fixtures.

3. Install lever-handle flushometer valves for accessible urinals with handle mounted on open side of compartment.

J. Wall Flange and Escutcheon Installation:

1. Install wall flanges or escutcheons at piping wall penetrations in exposed, finished locations.

2. Install deep-pattern escutcheons if required to conceal protruding fittings.

3. Comply with escutcheon requirements specified in Section 220518 "Escutcheons for Plumbing Piping."

K. Joint Sealing:

1. Seal joints between urinals and walls and floors using sanitary-type, one-part, mildew-resistant silicone sealant.

2. Match sealant color to urinal color.

3. Comply with sealant requirements specified in Section 079200 "Joint Sealants."

3.3 CONNECTIONS

A. Connect water closets with water supplies and soil, waste, and vent piping. Use size fittings required to match water closets.

B. Comply with water piping requirements specified in Section 221116 "Domestic Water Piping."

C. Comply with soil and waste piping requirements specified in Section 221316 "Sanitary Waste and Vent Piping."

D. Where installing piping adjacent to water closets, allow space for service and maintenance.

E. Operate and adjust urinals and controls. Replace damaged and malfunctioning urinals, fittings, and controls.

F. Adjust water pressure at flushometer valves to produce proper flow.

3.4 ADJUSTING

A. Operate and adjust water closet and urinal and controls. Replace damaged and malfunctioning water closets, fittings, and controls.

B. Adjust water pressure at flushometer valves to produce proper flow.

3.5 CLEANING AND PROTECTION

A. Clean water closets and fittings with manufacturers' recommended cleaning methods and materials.

B. Install protective covering for installed water closets and fittings.

C. Do not allow use of water closets for temporary facilities unless approved in writing by the Engineer.

D. Clean urinals and fittings with manufacturers' recommended cleaning methods and materials.

E. Install protective covering for installed urinals and fittings.

F. Do not allow use of urinals for temporary facilities unless approved in writing by the Engineer.

END OF SECTION

SECTION 22 42 16.13 – COMMERCIAL LAVATORIES

PART 1 - GENERAL

1.1 RELATED DOCUMENTS

A. Section 07 92 00 - JOINT SEALANTS.

B. Section 22 05 18 - ESCUTCHEONS FOR PLUMBING PIPING.

C. Section 22 05 23 - VALVES FOR PLUMBING PIPING.

D. Section 22 07 19 " PLUMBING PIPING INSULATION.

E. Section 22 11 16 " DOMESTIC WATER PIPING.

F. Section 22 13 16 " SANITARY WASTE AND VENT PIPING.

1.2 SUMMARY

A. Section Includes:

1. Lavatories.
2. Faucets.
3. Supply fittings.
4. Waste fittings.
5. Supports.

B. Related Requirements:

1. Section 224600 "Security Plumbing Fixtures" for security lavatories.

1.3 SUBMITTALS

A. Product Data: For each type of product.

1. Include construction details, material descriptions, dimensions of individual components and profiles, and finishes for lavatories.
2. Include rated capacities, operating characteristics, electrical characteristics, and furnished specialties and accessories.

B. Shop Drawings: Include diagrams for power, signal, and control wiring of automatic faucets.

C. Coordination Drawings: Counter cutout templates for mounting of counter-mounted lavatories.

D. Operation and Maintenance Data: For lavatories and faucets to include in operation and maintenance manuals.

E. Furnish extra materials that match products installed and that are packaged with protective covering for storage and identified with labels describing contents.

1. Faucet Washers and O-Rings: Equal to 6 of each type and size installed.
2. Faucet Cartridges and O-Rings: Equal to 6 of each type and size installed.

PART 2 - PRODUCTS

2.1 VITREOUS-CHINA, LAVATORIES

A. Lavatory: Wall-hung lavatory, vitreous china

1. American Standard Murro Universal Design Wall-hung Lavatory with Everclean model 0954.004EC Faucets holes on 4 inch Ctrs with overflow with Shroud/Knee Contract Guard model 0059.020EC, Toto LHT241(G) with Contract Guard, Kohler K-2035-8 Wal-mount Sink or approved equal.

2. Fixture:

   a. Standard: Lavatories shall conform to ASME A112.2M

   b. Bowl sizes: 15-1/1 inch wide, 13-1/2 inch front to back, 5 inch deep.

   c. Nominal Size: 20.5 inch deep, 21-1/4 inch wide

   d. Rear and sealed overflow

   e. Recessed self-draining deck

   f. Color: White

3. Faucet: American Standard model 1340.227, Elkay LK656, Delta Commercial 2517-HDF Cast Centerset, 0.5 GPM pressure compensating, vandal-resistant non-aerated spray or approved equal.

   a. Feature:

      1) Vandal-Resistant Brass Construction and Spray

      2) Pressure Compensating Non-Aerated Spray

      3) Automatic Shut-off

      4) Meets ADA Standard

      5) Replaceable Valve Cartridge

      6) Adjustable Flow Cycle

      7) Hot/Cold Button Indicators

      8) Lead Free: Faucet Contains no more than 0.25% total lead by weighted average.

2.2 LAMINAR-FLOW, FAUCET-SPOUT OUTLETS

A. NSF Standard: Comply with NSF 372 for faucet-spout-outlet materials that will be in contact with potable water.

B. Description: Chrome-plated-brass, faucet-spout outlet that produces non-aerating, laminar stream. Include external or internal thread that mates with faucet outlet for attachment to faucets where indicated and flow-rate range that includes flow of faucet.

2.3 SUPPLY FITTINGS

A. NSF Standard: Comply with NSF 372 for supply-fitting materials that will be in contact with potable water.

B. Standard: ASME A112.18.1/CSA B125.1.

C. Supply Piping: Chrome-plated-brass pipe or chrome-plated copper tube matching water-supply piping size. Include chrome-plated-brass or stainless-steel wall flange.

D. Supply Stops: Chrome-plated-brass, one-quarter-turn, ball-type or compression valve with inlet connection matching supply piping.

E. Risers:

1. NPS 1/2

2. Chrome-plated, rigid-copper-pipe and brass straight or offset tailpieces

2.4 WASTE FITTINGS

A. Standard: ASME A112.18.2/CSA B125.2.

B. Drain: NPS 1-1/4 with a strainer, pop-up stopper, crossbar or other device shall be provided to restrict the clear opening of the waste outlet. Where a stopper is utilized, a built-in overflow shall be provided.

C. Trap:

1. Size: NPS 1-1/2

2. Material: Chrome-plated, two-piece, cast-brass trap and swivel elbow with 0.032-inch- thick brass tube to wall and chrome-plated, or brass wall flange.

2.5 SUPPORTS

A. Lavatory:

1. Standard: ASME A112.6.1M.

2. Carrier: The contractor shall provide carrier fittings as required and provide suitable reinforcement for wall support.

3. Description: The Contractor shall furnish and install any additional piping for waste-fitting assembly, as required to match drainage piping material and arrangement with faceplates, couplings gaskets, and feet; bolts and hardware matching fixture

PART 3 - EXECUTION

3.1 EXAMINATION

A. Examine roughing-in of water supply and sanitary drainage and vent piping systems to verify actual locations of piping connections before lavatory installation.

B. Examine counters and walls for suitable conditions where lavatories will be installed.

C. Proceed with installation only after unsatisfactory conditions have been corrected.

3.2 INSTALLATION

A. Install lavatories level and plumb according to roughing-in drawings.

B. Install supports, affixed to building substrate, for wall-mounted lavatories.

C. Install accessible wall-mounted lavatories at handicapped/elderly mounting height for people with disabilities or the elderly, according to ICC/ANSI A117.1-2009.

D. Install wall flanges or escutcheons at piping wall penetrations in exposed, finished locations. Use deep-pattern escutcheons if required to conceal protruding fittings.

Comply with escutcheon requirements specified in Section 220518 "Escutcheons for Plumbing Piping."

E. Seal joints between lavatories, counters, and walls using sanitary-type, one-part, mildew-resistant silicone sealant. Match sealant color to fixture color. Comply with sealant requirements specified in Section 079200 "Joint Sealants."

F. Install protective shielding pipe covers and enclosures on exposed supplies and waste piping of accessible lavatories. Comply with requirements in Section 220719 "Plumbing Piping Insulation."

3.3 CONNECTIONS

A. Connect fixtures with water supplies, stops, and risers, and with traps, soil, waste, and vent piping. Use size fittings required to match fixtures.

B. Comply with water piping requirements specified in Section 221116 "Domestic Water Piping."

C. Comply with soil and waste piping requirements specified in Section 221316 "Sanitary Waste and Vent Piping."

3.4 ADJUSTING

A. Operate and adjust lavatories and controls. Replace damaged and malfunctioning lavatories, fittings, and controls.

B. Adjust water pressure at faucets to produce proper flow.

3.5 CLEANING AND PROTECTION

A. After completing installation of lavatories, inspect and repair damaged finishes.

B. Clean lavatories, faucets, and other fittings with manufacturers' recommended cleaning methods and materials.

C. Provide protective covering for installed lavatories and fittings.

D. Do not allow use of lavatories for temporary facilities unless approved in writing by the Engineer.

END OF SECTION

SECTION 22 42 16.16 – COMMERCIAL SINKS

PART 1 - PRODUCTS

1.1 RELATED DOCUMENTS

A. Section 07 9200 - JOINT SEALANTS.

B. Section 22 0518 - ESCUTCHEONS FOR PLUMBING PIPING.

C. Section 22 0523 - VALVES FOR PLUMBING PIPING.

D. Section 22 0719 - PLUMBING PIPING INSULATION.

E. Section 22 1116 - DOMESTIC WATER PIPING.

F. Section 22 13 16 - SANITARY WASTE AND VENT PIPING.

1.2 SUMMARY

A. Section Includes:

1. Service sinks.
2. Sink faucets.
3. Supports.
4. Supply fittings.
5. Waste fittings.

B. Related Requirements:

1.3 SUBMITTALS

A. Product Data: For each type of product.

1. Include construction details, material descriptions, dimensions of individual components and profiles, and finishes for sinks.
2. Include rated capacities, operating characteristic and furnished specialties and accessories.

B. Coordination Drawings: Counter cutout templates for mounting of counter-mounted lavatories.

C. Maintenance Data: For sinks to include in maintenance manuals.

D. Furnish extra materials that match products installed and that are packaged with protective covering for storage and identified with labels describing contents.

1. Faucet Washers and O-Rings: Equal to 10 percent of amount of each type and size installed.

PART 2 - PRODUCTS

2.1 SERVICE SINKS

A. Service Sinks:

1. Manufacture: American Standard Model 7695.008 With drilled back 2 holes on 8” centers and rim guard with cast iron P trap 7798.030, Elkay ESSW2520C with P-Trap LK173, Zurn Z5890 with P-Trap TS2900 or approved equal
2. Standard: ASME A112.19.1M
3. Fixture:
    a. Enameled cast iron
    b. Supplied with wall hanger and rim guard
    c. Drilled back for faucet
    d. Nominal Dimension: 24” X 20-1/2”
    e. Bowl sizes: 19-7/8”X16-3/8”X10-1/2” (Wide X Front to Back X Deep)
    f. Trap Standard: 7798.030 cast iron “P” trap standard to wall and strainer for 3” iron pipe

2.2 SINK FAUCETS

A. Faucet:

1. Manufacturer : American Standard Model 8344.012, Elkay LKB940C, Speakman SC-5811 Exposed Yoke Wall-Mount Utility Faucet or approved equal
2. Comply with NSF 372 for faucet-spout materials that will be in contact with potable water.
3. Standard: ASME A112.19.9M
4. Feature:
    a. Top Brace
    b. 6” cast brass spout with vacuum breaker
    c. Ceramic disc valves
    d. Integral supply stops
    e. Vandal-resistant metal lever handles with hot and cold indicators
    f. Bucket hook
    g. ¾” threaded hose end
    h. ½” NPT female inlet

2.3 SUPPORTS

A. Carrier:

1. Standard: ASME A112.6.12M.
2. Carrier: The contractor shall provide carrier for sink and faucet as required and provide suitable reinforcement for wall support.

3. Description: The Contractor shall furnish and install any additional piping for waste-fitting assembly, as required to match drainage piping material and arrangement with faceplates, couplings gaskets, and feet; bolts and hardware matching fixture

2.4 SUPPLY FITTINGS

A. NSF Standard: Comply with NSF 372 for supply-fitting materials that will be in contact with potable water.

B. Standard: ASME A112.18.1/CSA B125.1.

2.5 WASTE FITTINGS

A. Standard: ASME A112.18.2/CSA B125.2.

B. cast iron “P” trap standard to wall and strainer for 3” iron pipe

2.6 GROUT

A. Characteristics: Non-shrink; recommended for interior and exterior applications.

B. Packaging: Premixed and factory packaged.

PART 3 - EXECUTION

3.1 EXAMINATION

A. Examine roughing-in of water supply and sanitary drainage and vent piping systems to verify actual locations of piping connections before sink installation.

B. Examine walls, floors, and counters for suitable conditions where sinks will be installed.

C. Proceed with installation only after unsatisfactory conditions have been corrected.

3.2 INSTALLATION

A. Install sinks level and plumb according to roughing-in drawings.

B. Install supports, affixed to building substrate, for wall-hung sinks.

C. Set floor-mounted sinks in leveling bed of cement grout.

D. Install water-supply piping with stop on each supply to each sink faucet.

1. Exception: Use ball or gate valves if supply stops are not specified with sink. Comply with valve requirements specified in Section 220523 "Valves for Plumbing Piping".

2. Install stops in locations where they can be easily reached for operation.

E. Install wall flanges or escutcheons at piping wall penetrations in exposed, finished locations. Use deep-pattern escutcheons if required to conceal protruding fittings. Comply with escutcheon requirements specified in Section 220518 "Escutcheons for Plumbing Piping."

F. Seal joints between sinks and counters, floors, and walls using sanitary-type, one-part, mildew-resistant silicone sealant. Match sealant color to fixture color. Comply with sealant requirements specified in Section 079200 "Joint Sealants."

G. Install protective shielding pipe covers and enclosures on exposed supplies and waste piping of accessible sinks. Comply with requirements in Section 220719 "Plumbing Piping Insulation."

3.3 CONNECTIONS

A. Connect sinks with water supplies, stops, and risers, and with traps, soil, waste, and vent piping. Use size fittings required to match fixtures.

B. Comply with water piping requirements specified in Section 221116 "Domestic Water Piping."

C. Comply with soil and waste piping requirements specified in Section 221316 "Sanitary Waste and Vent Piping."

3.4 ADJUSTING

A. Operate and adjust sinks and controls. Replace damaged and malfunctioning sinks, fittings, and controls.

B. Adjust water pressure at faucets to produce proper flow.

3.5 CLEANING AND PROTECTION

A. After completing installation of sinks, inspect and repair damaged finishes.

B. Clean sinks, faucets, and other fittings with manufacturers' recommended cleaning methods and materials.

C. Provide protective covering for installed sinks and fittings.

END OF SECTION

SECTION 22 45 00 – PRODUCTS – EMERGENCY PLUMBING FIXTURES

PART 1 - GENERAL

1.1 RELATED DOCUMENTS

A. Section 07 92 00 - JOINT SEALANTS.

B. Section 22 05 18 - ESCUTCHEONS FOR PLUMBING PIPING.

C. Section 22 05 23 - VALVES FOR PLUMBING PIPING.

D. Section 22 07 19 - PLUMBING PIPING INSULATION.

E. Section 22 11 16 - DOMESTIC WATER PIPING.

F. Section 22 13 16 - SANITARY WASTE AND VENT PIPING.

1.2 SUMMARY

A. This Section includes the following:

1. Emergency shower and eye wash station.

1.3 SUBMITTALS

A. Product Data: For each type of product.

B. Include construction details, material descriptions, dimensions of individual components and profiles, and finishes for lavatories.

C. Include rated capacities, operating characteristics, electrical characteristics, and furnished specialties and accessories.

D. Shop Drawings: Include diagrams for power, signal, and control wiring of automatic faucets.

E. Coordination Drawings: Counter cutout templates for mounting of counter-mounted lavatories.

F. Operation and Maintenance Data: For lavatories and faucets to include in operation and maintenance manuals.

PART 2 - MATERIALS

2.1 MATERIALS

A. SAFETY SHOWER

1. In accordance with the guidelines of ANSI Z358.1-2004, the safety shower should be able to supply a controlled flow of potable water, delivering 75.7 litres per minute (20gallons per minute).

2. The shower unit should deliver water tepid (lukewarm) water upon activation. The temperature of water should at least be 15.5°C (60°F) to avoid causing hypothermia to the user. New installations of should be installed with plumbing for tepid water.

3. The control valve should operate in less than one second upon its activation and must remain ‘on’ without the use of worker’s hand, until it is intentionally shut off.

4. The valve shall be large enough to be easily located and operated by the user; the actuators must not be located more than 1.7 m (69 inches) above the surface where user stands.

5. The spray pattern of shower should have a diameter of 0.51 m (20 inches) at 1.53 inches) above the surface on which the injured worker stands.

6. The centre of the shower spray pattern should be located at least 0.46 m (16 inches from any obstructions, protrusions, or sharp objects.

7. The emergency shower must be installed with the showerhead not less than 2.08 m (82inches) or more than 2.44 m (96 inches) from the surface on which the user stands. If a shower enclosure is used, it shall provide a minimum unobstructed area of 0.87 m (3 inches) in diameter.

B. EYE WASH STATION

1. In accordance with the guidelines of ANSI Z358.1-2004, such eyewash equipment should ensure that a controlled flow of potable water is provided to both eyes simultaneously at a velocity low enough not to injure the user.

2. The eyewash units should have dual nozzle sprays.

3. Dust covers or protection devices should protect the nozzles that are supplied with the eyewash in place; they prevent dust and debris from falling inside the eyewash heads and potentially entering the eyes when the unit is turned on.

4. The dust covers should be automatically removed by actuation of the valve.

5. The plumbed eyewash unit should be capable of delivering 1.5 L of water per minute (0.4 gallons per minute) for at least 15 minutes continuously.

6. The eyewash unit should deliver tepid (lukewarm) water. The temperature of water should at least be 15.5°C (60°F) to prevent causing hypothermia or early cessation of flushing. New installations of eyewashes should be installed with plumbing for tepid water.

7. The valve should be large enough to be easily located and operated by the user; it shall go ‘off’ to ‘on’ in less than one second. Control valves shall be resistant to corrosion from potable water.

8. Manual or automatic actuators should be easy to locate and operate by touch.

9. The eyewash units should be installed and designed in such a manner that they do not require users’ hands to operate upon activation, and allow both eyelids to be opened using both hands.

10. The unit should be located to provide enough room to allow the eyelids to be held open with the hands while the eyes are in the water stream.

11. The emergency eyewash station shall be identified with a highly visible sign. There should be no sharp projections or electrical hazards anywhere in the operating area of the unit. It should be ensured that the path leading to the emergency eyewash is clear of obstruction and that the immediate area is neat and easily accessible.

PART 3 – EXECUTION

3.1 EMERGENCY SHOWER INSTALLATION

1. The emergency shower should be installed in compliance with ANSI standard Z 358.1-2004, and the manufacturer's instructions. Upon installation, equipment must be tested for leaks and proper functioning.
2. Emergency showers should be located in accessible locations that require no more than 10 seconds to reach and shall be located on the same level as the potential chemical or biological hazard.
3. Shower locations should be identified with highly visible signs and the areas shall be bright, well lit, and free of obstructions and projections.
4. The shower should supply water at a minimum rate of 75.7 Liters per minute (20 gallons per minute) for a period of at least fifteen minutes.
5. If the equipment piping is located in areas which are exposed to potential freezing temperatures, then it should be insulated or protected with appropriate material(s).
6. There must be a proper drainage system present near the shower; this will minimize any potential for contaminating the surface or groundwater.
7. Combination units with showers with eye and eye/face wash may be installed where feasible. The combination units shall be connected to a system capable of supplying adequate flushing fluid to meet the requirements of each component when all components are operated simultaneously. Combination units will be positioned so they can be used simultaneously by the user under the shower.

3.2 EYE WASH STATION INSTALLATION

1. Equipment shall be installed in compliance with ANSI standard Z 358.1-2004, and the manufacturer's instructions. Upon installation, equipment shall be tested for leaks.
2. Plumbed eyewash unit must be installed in accessible location that an injured person can reach in 10 seconds or less, which is roughly 55 unobstructed feet.
3. When acids or strong caustics/corrosive are used, equipment should be located within 10 feet of the work area and have unrestricted access to a well-lit area.
4. The unit should be located on the same level as the hazard and the path of travel must be free of obstructions that may inhibit the immediate use of the equipment. A door is considered to be an obstruction. If the hazard is not a corrosive, one intervening door can be present between the hazard and emergency equipment so long as the door opens in the same direction of travel as the person attempting to reach the emergency equipment; and/or the door does not lock to impede access to eyewash station.
5. Eyewash locations should be identified with highly visible signs and the areas shall be well-lit, and free of obstructions and projections.
6. There must be a proper drainage system present near the eyewash unit; this will minimize any potential of contamination to surface or groundwater.
7. Eyewashes should be mounted so that water nozzles are not less than 0.84 m (33 inches) and no greater than 1.15 m (45 inches) from the surface/ floor on which the user stands.

8. The eyewash must be, at least, 0.15 m (6 inches) away from the wall or any other obstruction.
9. Equipment piping that is located in areas exposed to potential freezing temperatures should be insulated or protected with appropriate material(s).
10. If feasible, the units should be located so one person can use both the eyewash and shower at the same time.
11. Drench hoses many supplement, but cannot replace the eyewash unit. A drench hose requires the use of at least one hand, rendering it impossible to hold both eyelids open simultaneously.
12. Personal or portable eyewash equipment should only be used where there is no access to plumbing, or where a personal eyewash unit is to be used as a first wash before proceeding to the eyewash station.

END OF SECTION

SECTION 22 47 13 – DRINKING FOUNTAINS

PART 1 - GENERAL

1.1 SUMMARY

A. Section includes drinking fountains and related components.

1.2 SUBMITTALS

A. Product Data: For each type of drinking fountain.

1. Include construction details, material descriptions, dimensions of individual components and profiles, and finishes.
2. Include operating characteristics, and furnished specialties and accessories.

B. Maintenance Data: For drinking fountains to include in maintenance manuals.

PART 2 - PRODUCTS

2.1 DRINKING FOUNTAINS

A. Drinking Fountain: Stainless steel, wall mounted.

1. Stainless-Steel Drinking Fountains:
   a. Haws, model 1119FR
   b. Murdock A152-VR
   c. Elaky LZSTL8WSSK
   d. Or Approved Equal.

2.2 SUPPORTS

1. Provide manufacturers standard supports for masonry construction coordinate supports installation with fabrication of stainless steel drinking fountain/bulletin board frame.

PART 3 - EXECUTION

3.1 EXAMINATION

A. Examine roughing-in for water-supply and sanitary drainage and vent piping systems to verify actual locations of piping connections before fixture installation.

B. Examine walls and floors for suitable conditions where fixtures will be installed.

C. Proceed with installation only after unsatisfactory conditions have been corrected.

3.2 INSTALLATION

A. Install fixtures level and plumb according to roughing-in drawings. For fixtures indicated for children, install at height required by authorities having jurisdiction.

B. Install off-the-floor carrier supports, affixed to building substrate, for wall-mounted fixtures.

C. Seal joints between fixtures and walls using sanitary-type, one-part, mildew-resistant, silicone sealant. Match sealant color to fixture color.

3.3 CONNECTIONS

A. Make connection to the water supply, waste, and vent piping as per the NYC Plumbing Code, latest edition.

3.4 ADJUSTING

A. Adjust fixture flow regulators for proper flow and stream height.

3.5 CLEANING

A. After installing fixtures, inspect unit. Remove paint splatters and other spots, dirt, and debris. Repair damaged finish to match original finish.

B. Clean fixtures, on completion of installation, according to manufacturer's written instructions.

C. Provide protective covering for installed fixtures.

D. Do not allow use of fixtures for temporary facilities unless approved in writing by the Engineer.

END OF SECTION

SECTION 23 0529 – HANGERS AND SUPPORTS FOR HVAC PIPING AND EQUIPMENT

PART 1 - GENERAL

1.1 SUMMARY

A. Section Includes:

1. Metal pipe hangers and supports.
2. Thermal-hanger shield inserts.
3. Fastener systems.
4. Pipe stands.
5. Equipment supports

1.2 SUBMITTALS

A. Product Data: For each type of product.

B. Shop Drawings: Signed and sealed by a qualified professional engineer licensed in the State of New York, for Approval by the Engineer. Show fabrication and installation details and include calculations for the following; include Product Data for components:

1. Trapeze pipe hangers.
2. Metal framing systems.
3. Fiberglass strut systems.
4. Pipe stands.
5. Equipment supports.

PART 2 - PRODUCTS

2.1 PERFORMANCE REQUIREMENTS

A. Structural Performance: Hangers and supports for HVAC piping and equipment shall withstand the effects of gravity loads and stresses within limits and under conditions indicated according to ASCE/SEI 7

1. Design supports for multiple pipes, including pipe stands, capable of supporting combined weight of supported systems, system contents, and test water.
2. Design equipment supports capable of supporting combined operating weight of supported equipment and connected systems and components.
3. Design seismic-restraint hangers and supports for piping and equipment

2.2 METAL PIPE HANGERS AND SUPPORTS

A. Manufacture: Subject to compliance with requirements, provide products by one of the following:

1. Eaton: B-Line Series, Pipe, Hangers and Supports
2. National Pipe Hanger Corporation
3. Gulf State Hager’s and Supports

4. Empire Industries
5. Or approved equal

B. Carbon-Steel Pipe Hangers and Supports:

1. Description: MSS SP-58, Types 1 through 58, factory-fabricated components.
2. Galvanized Metallic Coatings: Pregalvanized, hot-dip galvanized, or electro-galvanized.
3. Nonmetallic Coatings: Plastic coated, or epoxy powder-coated.
4. Padded Hangers: Hanger with fiberglass or other pipe insulation pad or cushion to support bearing surface of piping.
5. Hanger Rods: Continuous-thread rod, nuts, and washer made of carbon steel or stainless steel.

C. Stainless-Steel Pipe Hangers and Supports:

1. Description: MSS SP-58, Types 1 through 58, factory-fabricated components.
2. Padded Hangers: Hanger with fiberglass or other pipe insulation pad or cushion to support bearing surface of piping.
3. Hanger Rods: Continuous-thread rod, nuts, and washer made of stainless steel.

2.3 THERMAL-HANGER SHIELD INSERTS

A. Manufacture: Subject to compliance with requirements, provide products by one of the following:

1. Eaton: B-Line Series, Pipe, Hangers and Supports
2. National Pipe Hanger Corporation
3. Gulf State Hager's and Supports
4. Empire Industries
5. Or approved equal

B. Insulation-Insert Material for Cold Piping: ASTM C 552, Type II cellular glass with 100-psi minimum compressive strength and vapor barrier.

C. Insulation-Insert Material for Hot Piping: Water-repellent-treated, ASTM C 533, Type I calcium silicate with 100-psi minimum compressive strength.

D. For Trapeze or Clamped Systems: Insert and shield shall cover entire circumference of pipe.

E. For Clevis or Band Hangers: Insert and shield shall cover lower 180 degrees of pipe.

F. Insert Length: Extend 2 inches beyond sheet metal shield for piping operating below ambient air temperature.

2.4 FASTENER SYSTEMS

A. Powder-Actuated Fasteners: Threaded-steel stud, for use in hardened portland cement concrete with pull-out, tension, and shear capacities appropriate for supported loads and building materials where used.

B. Mechanical-Expansion Anchors: Insert-wedge-type anchors for use in hardened portland cement concrete; with pull-out, tension, and shear capacities appropriate for supported loads and building materials where used.

1. Indoor Applications: stainless steel.

2. Outdoor Applications: Stainless steel.

2.5 PIPE STANDS

A. General Requirements for Pipe Stands: Shop- or field-fabricated assemblies made of manufactured corrosion-resistant components to support roof-mounted piping.

B. Compact Pipe Stand:

1. Description: Single base unit with integral-rod roller, pipe clamps, or V-shaped cradle to support pipe, for roof installation without membrane penetration.

2. Base: Single, vulcanized rubber, molded polypropylene, or polycarbonate.

3. Hardware: Galvanized steel or polycarbonate.

4. Accessories: Protection pads.

C. Low-Profile, Single Base, Single-Pipe Stand:

1. Description: Single base with vertical and horizontal members, and pipe support, for roof installation without membrane protection.

2. Base: Single, vulcanized rubber, molded polypropylene, or polycarbonate.

3. Vertical Members: Two, stainless-steel, continuous-thread 1/2-inch rods.

4. Horizontal Member: Adjustable horizontal, stainless-steel pipe support channels.

5. Pipe Supports: Roller

6. Hardware: Stainless steel.

7. Accessories: Protection pads.

D. High-Profile, Single Base, Single-Pipe Stand:

1. Description: Single base, vertical and horizontal members, and pipe support, for roof installation without membrane penetration.

2. Base: Single vulcanized rubber or molded polypropylene.

3. Vertical Members: Two, stainless-steel, continuous-thread 1/2-inch rods.

4. Horizontal Member: One, adjustable height, stainless-steel pipe support slotted channel or plate.

5. Pipe Supports: Roller

6. Hardware: Galvanized or Stainless steel.

7. Accessories: Protection pads, 1/2-inch continuous-thread galvanized-steel rod or, 1/2-inch continuous-thread stainless-steel rod.

E. High-Profile, Multiple-Pipe Stand:

1. Description: Assembly of bases, vertical and horizontal members, and pipe supports, for roof installation without membrane penetration.

2. Bases: Two or more; vulcanized rubber
3. Vertical Members: Two or more, galvanized or stainless]-steel channels.
4. Horizontal Members: One or more, adjustable height, galvanized or stainless]-steel pipe support.
5. Pipe Supports: Clevis hanger
6. Hardware: Galvanized or Stainless steel.
7. Accessories: Protection pads, 1/2-inch continuous-thread rod.

F. Curb-Mounted-Type Pipe Stands: Shop- or field-fabricated pipe supports made from structural-steel shapes, continuous-thread rods, and rollers, for mounting on permanent stationary roof curb.

2.6 EQUIPMENT SUPPORTS

A. Description: Welded, shop- or field-fabricated equipment support made from structural carbon-steel shapes.

B. Manufacture: Subject to compliance with requirements, provide products by one of the following:

1. Eaton: B-Line Series, Pipe, Hangers and Supports
2. National Pipe Hanger Corporation
3. Gulf State Hager's and Supports
4. Empire Industries
5. Or approved equal

C. Carbon Steel: ASTM A 1011

D. Structural Steel: ASTM A 36, carbon-steel plates, shapes, and bars; galvanized.

E. Stainless Steel: ASTM A 240

F. Threaded Rods: Continuously threaded. Zinc-plated or galvanized steel for indoor applications and stainless steel for outdoor applications. Mating nuts and washers of similar materials as rods.

G. Grout: ASTM C 1107, factory-mixed and -packaged, dry, hydraulic-cement, nonshrink and nonmetallic grout; suitable for interior and exterior applications.

1. Properties: Nonstaining, noncorrosive, and nongaseous.
2. Design Mix: 5000-psi, 28-day compressive strength.

PART 3 - EXECUTION

3.1 HANGER AND SUPPORT INSTALLATION

A. Metal Pipe-Hanger Installation: Comply with MSS SP-58. Install hangers, supports, clamps, and attachments as required to properly support piping from the building structure.

B. Thermal-Hanger Shield Installation: Install in pipe hanger or shield for insulated piping.

C. Fastener System Installation:

1. Install powder-actuated fasteners for use in lightweight concrete or concrete slabs less than 4 inches (100 mm) thick in concrete after concrete is placed and completely cured. Use operators that are licensed by powder-actuated tool manufacturer. Install fasteners according to powder-actuated tool manufacturer's operating manual.

2. Install mechanical-expansion anchors in concrete after concrete is placed and completely cured. Install fasteners according to manufacturer's written instructions.

D. Pipe Stand Installation:

1. Pipe Stand Types except Curb-Mounted Type: Assemble components and mount on smooth roof surface. Do not penetrate roof membrane.

2. Curb-Mounted-Type Pipe Stands: Assemble components or fabricate pipe stand and mount on permanent, stationary roof curb. See Section 077200 "Roof Accessories" for curbs.

E. Install hangers and supports complete with necessary attachments, inserts, bolts, rods, nuts, washers, and other accessories.

F. Equipment Support Installation: Fabricate from welded-structural-steel shapes.

G. Install hangers and supports to allow controlled thermal and seismic movement of piping systems, to permit freedom of movement between pipe anchors, and to facilitate action of expansion joints, expansion loops, expansion bends, and similar units.

H. Install lateral bracing with pipe hangers and supports to prevent swaying.

I. Install building attachments within concrete slabs or attach to structural steel. Install additional attachments at concentrated loads, including valves, flanges, and strainers, NPS 2-1/2 and larger and at changes in direction of piping. Install concrete inserts before concrete is placed; fasten inserts to forms and install reinforcing bars through openings at top of inserts.

J. Load Distribution: Install hangers and supports so that piping live and dead loads and stresses from movement will not be transmitted to connected equipment.

K. Pipe Slopes: Install hangers and supports to provide indicated pipe slopes and to not exceed maximum pipe deflections allowed by ASME B31.9 for building services piping.

L. Insulated Piping:

1. Attach clamps and spacers to piping.

a. Piping Operating above Ambient Air Temperature: Clamp may project through insulation.

b. Piping Operating below Ambient Air Temperature: Use thermal-hanger shield insert with clamp sized to match OD of insert.

c. Do not exceed pipe stress limits allowed by ASME B31.9 for building services piping.

2. Install MSS SP-58, Type 39, protection saddles if insulation without vapor barrier is indicated. Fill interior voids with insulation that matches adjoining insulation.

a. Option: Thermal-hanger shield inserts may be used. Include steel weight-distribution plate for pipe NPS 4 and larger if pipe is installed on rollers.

3. Install MSS SP-58, Type 40, protective shields on cold piping with vapor barrier. Shields shall span an arc of 180 degrees.
    a. Option: Thermal-hanger shield inserts may be used. Include steel weight-distribution plate for pipe NPS 4 and larger if pipe is installed on rollers.
4. Shield Dimensions for Pipe: Not less than the following:
    a. NPS 1/4 to NPS 3-1/2: 12 inches long and 0.048 inch thick.
    b. NPS 4: 12 inches long and 0.06 inch thick.
    c. NPS 5 and NPS 6: 18 inches long and 0.06 inch thick.
    d. NPS 8 to NPS 14: 24 inches long and 0.075 inch thick.
    e. NPS 16 to NPS 24: 24 inches long and 0.105 inch thick.
5. Pipes NPS 8 and Larger: Include wood or reinforced calcium-silicate-insulation inserts of length at least as long as protective shield.
6. Thermal-Hanger Shields: Install with insulation same thickness as piping insulation.

3.2 EQUIPMENT SUPPORTS

A. Fabricate structural-steel stands to suspend equipment from structure overhead or to support equipment above floor.

B. Grouting: Place grout under supports for equipment and make bearing surface smooth.

C. Provide lateral bracing, to prevent swaying, for equipment supports.

3.3 METAL FABRICATIONS

A. Cut, drill, and fit miscellaneous metal fabrications for trapeze pipe hangers and equipment supports.

B. Fit exposed connections together to form hairline joints. Field weld connections that cannot be shop welded because of shipping size limitations.

C. Field Welding: Comply with AWS D1.1 procedures for shielded, metal arc welding; appearance and quality of welds; and methods used in correcting welding work; and with the following:
1. Use materials and methods that minimize distortion and develop strength and corrosion resistance of base metals.
2. Obtain fusion without undercut or overlap.
3. Remove welding flux immediately.
4. Finish welds at exposed connections so no roughness shows after finishing and so contours of welded surfaces match adjacent contours.

3.4 ADJUSTING

A. Hanger Adjustments: Adjust hangers to distribute loads equally on attachments and to achieve indicated slope of pipe.

B. Trim excess length of continuous-thread hanger and support rods to 1-1/2 inches.

3.5 PAINTING

A. Touchup: Clean field welds and abraded areas of shop paint. Paint exposed areas immediately after erecting hangers and supports. Use same materials as used for shop painting. Comply with SSPC-PA 1 requirements for touching up field-painted surfaces.

1. Apply paint by brush or spray to provide a minimum dry film thickness of 2.0 mils.

B. Touchup: Comply with requirements in Section 099113 "Exterior Painting", Section 099123 "Interior Painting" and Section 099600 "High-Performance Coatings" for cleaning and touchup painting of field welds, bolted connections, and abraded areas of shop paint on miscellaneous metal.

C. Galvanized Surfaces: Clean welds, bolted connections, and abraded areas and apply galvanizing-repair paint to comply with ASTM A 780/A 780M.

3.6 HANGER AND SUPPORT SCHEDULE

A. Specific hanger and support requirements are in Sections specifying piping systems and equipment.

B. Comply with MSS SP-58 for pipe-hanger selections and applications that are not specified in piping system Sections.

C. Use hangers and supports with galvanized metallic coatings for piping and equipment that will not have field-applied finish.

D. Use nonmetallic coatings on attachments for electrolytic protection where attachments are in direct contact with copper tubing.

E. Use carbon-steel pipe hangers and supports, metal trapeze pipe hangers, and metal framing systems and attachments for general service applications.

F. Use stainless-steel pipe hangers and stainless-steel attachments for hostile environment applications.

G. Use copper-plated pipe hangers and copper attachments for copper piping and tubing.

H. Use padded hangers for piping that is subject to scratching.

I. Use thermal-hanger shield inserts for insulated piping and tubing.

J. Horizontal-Piping Hangers and Supports: Unless otherwise indicated and except as specified in piping system Sections, install the following types:

1. Adjustable, Steel Clevis Hangers (MSS Type 1): For suspension of noninsulated or insulated, stationary pipes NPS 1/2 to NPS 30

2. Yoke-Type Pipe Clamps (MSS Type 2): For suspension of up to 1050 deg F, pipes NPS 4 to NPS 24, requiring up to 4 inches of insulation.

3. Carbon- or Alloy-Steel, Double-Bolt Pipe Clamps (MSS Type 3): For suspension of pipes NPS 3/4 to NPS 36, requiring clamp flexibility and up to 4 inches of insulation.

4. Steel Pipe Clamps (MSS Type 4): For suspension of cold and hot pipes NPS 1/2 to NPS 24 if little or no insulation is required.

5. Pipe Hangers (MSS Type 5): For suspension of pipes NPS 1/2 to NPS 4, to allow off-center closure for hanger installation before pipe erection.

6. Adjustable, Swivel Split- or Solid-Ring Hangers (MSS Type 6): For suspension of noninsulated, stationary pipes NPS 3/4 to NPS 8.
7. Adjustable, Steel Band Hangers (MSS Type 7): For suspension of noninsulated, stationary pipes NPS 1/2 to NPS 8.
8. Adjustable Band Hangers (MSS Type 9): For suspension of noninsulated, stationary pipes NPS 1/2 to NPS 8.
9. Adjustable, Swivel-Ring Band Hangers (MSS Type 10): For suspension of noninsulated, stationary pipes NPS 1/2 to NPS 8.
10. Split Pipe Ring with or without Turnbuckle Hangers (MSS Type 11): For suspension of noninsulated, stationary pipes NPS 3/8 to NPS 8.
11. Extension Hinged or Two-Bolt Split Pipe Clamps (MSS Type 12): For suspension of noninsulated, stationary pipes NPS 3/8 to NPS 3.
12. U-Bolts (MSS Type 24): For support of heavy pipes NPS 1/2 to NPS 30.
13. Clips (MSS Type 26): For support of insulated pipes not subject to expansion or contraction.
14. Pipe Saddle Supports (MSS Type 36): For support of pipes NPS 4 to NPS 36, with steel-pipe base stanchion support and cast-iron floor flange or carbon-steel plate.
15. Pipe Stanchion Saddles (MSS Type 37): For support of pipes NPS 4 to NPS 36, with steel-pipe base stanchion support and cast-iron floor flange or carbon-steel plate, and with U-bolt to retain pipe.
16. Adjustable Pipe Saddle Supports (MSS Type 38): For stanchion-type support for pipes NPS 2-1/2 to NPS 36 if vertical adjustment is required, with steel-pipe base stanchion support and cast-iron floor flange.
17. Single-Pipe Rolls (MSS Type 41): For suspension of pipes NPS 1 to NPS 30, from two rods if longitudinal movement caused by expansion and contraction might occur.
18. Adjustable Roller Hangers (MSS Type 43): For suspension of pipes NPS 2-1/2 to NPS 24, from single rod if horizontal movement caused by expansion and contraction might occur.
19. Complete Pipe Rolls (MSS Type 44): For support of pipes NPS 2 to NPS 42 if longitudinal movement caused by expansion and contraction might occur but vertical adjustment is unnecessary.
20. Pipe Roll and Plate Units (MSS Type 45): For support of pipes NPS 2 to NPS 24 if small horizontal movement caused by expansion and contraction might occur and vertical adjustment is unnecessary.
21. Adjustable Pipe Roll and Base Units (MSS Type 46): For support of pipes NPS 2 to NPS 30 if vertical and lateral adjustment during installation might be required in addition to expansion and contraction.

K. Vertical-Piping Clamps: Unless otherwise indicated and except as specified in piping system Sections, install the following types:

1. Extension Pipe or Riser Clamps (MSS Type 8): For support of pipe risers NPS 3/4 to NPS 24

2. Carbon- or Alloy-Steel Riser Clamps (MSS Type 42): For support of pipe risers NPS 3/4 to NPS 24 if longer ends are required for riser clamps.

L. Hanger-Rod Attachments: Unless otherwise indicated and except as specified in piping system Sections, install the following types:

1. Steel Turnbuckles (MSS Type 13): For adjustment up to 6 inches for heavy loads.
2. Steel Clevises (MSS Type 14): For 120 to 450 deg F piping installations.
3. Swivel Turnbuckles (MSS Type 15): For use with MSS Type 11, split pipe rings.
4. Malleable-Iron Sockets (MSS Type 16): For attaching hanger rods to various types of building attachments.
5. Steel Weldless Eye Nuts (MSS Type 17): For 120 to 450 deg F piping installations.

M. Building Attachments: Unless otherwise indicated and except as specified in piping system Sections, install the following types:

1. Steel or Malleable Concrete Inserts (MSS Type 18): For upper attachment to suspend pipe hangers from concrete ceiling.
2. Top-Beam C-Clamps (MSS Type 19): For use under roof installations with bar-joist construction, to attach to top flange of structural shape.
3. Side-Beam or Channel Clamps (MSS Type 20): For attaching to bottom flange of beams, channels, or angles.
4. Center-Beam Clamps (MSS Type 21): For attaching to center of bottom flange of beams.
5. Welded Beam Attachments (MSS Type 22): For attaching to bottom of beams if loads are considerable and rod sizes are large.
6. C-Clamps (MSS Type 23): For structural shapes.
7. Top-Beam Clamps (MSS Type 25): For top of beams if hanger rod is required tangent to flange edge.
8. Side-Beam Clamps (MSS Type 27): For bottom of steel I-beams.
9. Steel-Beam Clamps with Eye Nuts (MSS Type 28): For attaching to bottom of steel I-beams for heavy loads.
10. Linked-Steel Clamps with Eye Nuts (MSS Type 29): For attaching to bottom of steel I-beams for heavy loads, with link extensions.
11. Malleable-Beam Clamps with Extension Pieces (MSS Type 30): For attaching to structural steel.
12. Welded-Steel Brackets: For support of pipes from below or for suspending from above by using clip and rod. Use one of the following for indicated loads:
    a. Light (MSS Type 31): 750 lb
    b. Medium (MSS Type 32): 1500 lb
    c. Heavy (MSS Type 33): 3000 lb
13. Side-Beam Brackets (MSS Type 34): For sides of steel or wooden beams.

14. Plate Lugs (MSS Type 57): For attaching to steel beams if flexibility at beam is required.

15. Horizontal Travelers (MSS Type 58): For supporting piping systems subject to linear horizontal movement where headroom is limited.

N. Saddles and Shields: Unless otherwise indicated and except as specified in piping system Sections, install the following types:

1. Steel-Pipe-Covering Protection Saddles (MSS Type 39): To fill interior voids with insulation that matches adjoining insulation.

2. Protection Shields (MSS Type 40): Of length recommended in writing by manufacturer to prevent crushing insulation.

3. Thermal-Hanger Shield Inserts: For supporting insulated pipe.

O. Spring Hangers and Supports: Unless otherwise indicated and except as specified in piping system Sections, install the following types:

1. Restraint-Control Devices (MSS Type 47): Where indicated to control piping movement.

2. Spring Cushions (MSS Type 48): For light loads if vertical movement does not exceed 1-1/4 inches

3. Spring-Cushion Roll Hangers (MSS Type 49): For equipping Type 41, roll hanger with springs.

4. Spring Sway Braces (MSS Type 50): To retard sway, shock, vibration, or thermal expansion in piping systems.

5. Variable-Spring Hangers (MSS Type 51): Preset to indicated load and limit variability factor to 25 percent to allow expansion and contraction of piping system from hanger.

6. Variable-Spring Base Supports (MSS Type 52): Preset to indicated load and limit variability factor to 25 percent to allow expansion and contraction of piping system from base support.

7. Variable-Spring Trapeze Hangers (MSS Type 53): Preset to indicated load and limit variability factor to 25 percent to allow expansion and contraction of piping system from trapeze support.

8. Constant Supports: For critical piping stress and if necessary to avoid transfer of stress from one support to another support, critical terminal, or connected equipment. Include auxiliary stops for erection, hydrostatic test, and load-adjustment capability. These supports include the following types:

a. Horizontal (MSS Type 54): Mounted horizontally.

b. Vertical (MSS Type 55): Mounted vertically.

c. Trapeze (MSS Type 56): Two vertical-type supports and one trapeze member.

P. Comply with MSS SP-58 for trapeze pipe-hanger selections and applications that are not specified in piping system Sections.

Q. Comply with MFMA-103 for metal framing system selections and applications that are not specified in piping system Sections.

R. Use mechanical-expansion anchors instead of building attachments where required in concrete construction.

END OF SECTION

SECTION 23 0553 – IDENTIFICATION FOR HVAC PIPING AND EQUIPMENT

PART 1 - GENERAL

1.1 SUMMARY

A. Section includes

1. Equipment labels
2. Fire or smoke or fir/smoke damper access door labels
3. Warning signs and labels.
4. Pipe labels.
5. Duct labels.
6. Stencils.
7. Valve tags.
8. Warning tags.

1.2 SUBMITTALS

A. Product Data: For each type of product indicated.

B. Samples: For color, letter style, and graphic representation required for each identification material and device.

C. Equipment Label Schedule: Include a listing of all equipment to be labeled with the proposed content for each label.

D. Valve numbering scheme.

E. Valve Schedules: For each piping system to include in maintenance manuals.

1.3 COORDINATION

A. Coordinate installation of identifying devices with completion of covering and painting of surfaces where devices are to be applied.

B. Coordinate installation of identifying devices with locations of access panels and doors.

C. Install identifying devices before installing acoustical ceilings and similar concealment.

PART 2 - PRODUCTS

2.1 EQUIPMENT LABELS

A. Metal Labels for Equipment:

1. Material and Thickness: Brass, 0.032-inch minimum thickness or anodized aluminum, 0.032-inch minimum thickness, and having predrilled or stamped holes for attachment hardware.
2. Minimum Label Size: Length and width vary for required label content, but not less than 2-1/2 by 3/4 inch.
3. Minimum Letter Size: 1/4 inch for name of units if viewing distance is less than 24 inches, 1/2 inch for viewing distances up to 72 inches, and proportionately larger

lettering for greater viewing distances. Include secondary lettering two-thirds to three-fourths the size of principal lettering.

4. Fasteners: Stainless-steel rivets.

5. Adhesive: Contact-type permanent adhesive, compatible with label and with substrate.

B. Label Content: Include equipment's Drawing designation or unique equipment number, Drawing numbers where equipment is indicated (plans, details, and schedules), plus the Specification Section number and title where equipment is specified.

C. Equipment Label Schedule: For each item of equipment to be labeled, on 8-1/2-by-11-inch bond paper. Tabulate equipment identification number and identify Drawing numbers where equipment is indicated (plans, details, and schedules), plus the Specification Section number and title where equipment is specified. Equipment schedule shall be included in operation and maintenance data.

2.2 FIRE/ SMOKE DAMPER ACCESS DOOR LABEL

A. Label Content: Fire or Smoke or Fire/Smoke damper access points shall be permanently identified on the exterior by label having letters not less than 0.5 inch in height reading: FIRE DAMPER, SMOKE DAMPER OR FIRE/SMOKE DAMPER.

2.3 WARNING SIGNS AND LABELS

A. Material and Thickness: Multilayer, multicolor, plastic labels for mechanical engraving, 1/8 inch thick, and having predrilled holes for attachment hardware.

B. Letter Color: Red.

C. Background Color: Yellow.

D. Maximum Temperature: Able to withstand temperatures up to 160 deg F (71 deg C).

E. Minimum Label Size: Length and width vary for required label content, but not less than 2-1/2 by 3/4 inch (64 by 19 mm).

F. Minimum Letter Size: 1/4 inch for name of units if viewing distance is less than 24 inches, 1/2 inch for viewing distances up to 72 inches, and proportionately larger lettering for greater viewing distances. Include secondary lettering two-thirds to three-fourths the size of principal lettering.

G. Fasteners: Stainless-steel rivets.

H. Adhesive: Contact-type permanent adhesive, compatible with label and with substrate.

I. Label Content: Include caution and warning information, plus emergency notification instructions.

2.4 PIPE LABELS

A. General Requirements for Manufactured Pipe Labels: Preprinted, color-coded, with lettering indicating service, and showing flow direction conforming to ASME A13.1.

B. Pretensioned Pipe Labels: Precoiled, semirigid plastic formed to cover full circumference of pipe and to attach to pipe without fasteners or adhesive.

C. Self-Adhesive Pipe Labels: Printed plastic with contact-type, permanent-adhesive backing.

D. Pipe Label Contents: Include identification of piping service using same designations or abbreviations as used on Drawings, pipe size, and an arrow indicating flow direction.

1. Flow-Direction Arrows: Integral with piping system service lettering to accommodate both directions or as separate unit on each pipe label to indicate flow direction.

2. Lettering Size: At least 1-1/2 inches high.

2.5 DUCT LABELS

A. Material and Thickness: Multilayer, multicolor, plastic labels for mechanical engraving, 1/8 inch thick, and having predrilled holes for attachment hardware.

B. Letter Color: Black.

C. Background Color: White.

D. Maximum Temperature: Able to withstand temperatures up to 160 deg F (71 deg C).

E. Minimum Label Size: Length and width vary for required label content, but not less than 2-1/2 by 3/4 inch.

F. Minimum Letter Size: 1/4 inch for name of units if viewing distance is less than 24 inches, 1/2 inch for viewing distances up to 72 inches, and proportionately larger lettering for greater viewing distances. Include secondary lettering two-thirds to three-fourths the size of principal lettering.

G. Fasteners: Stainless-steel rivets.

H. Adhesive: Contact-type permanent adhesive, compatible with label and with substrate.

I. Duct Label Contents: Include identification of duct service using same designations or abbreviations as used on Drawings, duct size, and an arrow indicating flow direction.

1. Flow-Direction Arrows: Integral with duct system service lettering to accommodate both directions or as separate unit on each duct label to indicate flow direction.

2. Lettering Size: At least 1-1/2 inches high.

2.6 STENCILS

A. Stencils: Prepared with letter sizes according to ASME A13.1 for piping; minimum letter height of 1-1/4 inches for ducts; and minimum letter height of 3/4 inch for access panel and door labels, equipment labels, and similar operational instructions.

1. Stencil Material: Aluminum.

2. Stencil Paint: Exterior, gloss, alkyd enamel or acrylic enamel black unless otherwise indicated. Paint may be in pressurized spray-can form.

3. Identification Paint: Exterior, alkyd enamel or acrylic enamel in colors according to ASME A13.1 unless otherwise indicated.

2.7 VALVE TAGS

A. Valve Tags: Stamped or engraved with 1/4-inch letters for piping system abbreviation and 1/2-inch numbers.

1. Tag Material: Brass, 0.032-inch minimum thickness, and having predrilled or stamped holes for attachment hardware.

2. Fasteners: Brass wire-link chain.

B. Valve Schedules: For each piping system, on 8-1/2-by-11-inch bond paper. Tabulate valve number, piping system, system abbreviation (as shown on valve tag), location of valve (room or space), normal-operating position (open, closed, or modulating), and variations for identification. Mark valves for emergency shutoff and similar special uses.

1. Valve-tag schedule shall be included in operation and maintenance data.

2.8 WARNING TAGS

A. Warning Tags: Preprinted or partially preprinted, accident-prevention tags, of plasticized card stock with matte finish suitable for writing.

1. Size: Approximately 4 by 7 inches.
2. Fasteners: Brass grommet and wire.
3. Nomenclature: Large-size primary caption such as "DANGER," "CAUTION," or "DO NOT OPERATE."
4. Color: Yellow background with black lettering.

PART 3 - EXECUTION

3.1 PREPARATION

A. Clean piping and equipment surfaces of substances that could impair bond of identification devices, including dirt, oil, grease, release agents, and incompatible primers, paints, and encapsulants.

3.2 EQUIPMENT LABEL INSTALLATION

A. Install or permanently fasten labels on each major item of mechanical equipment.

B. Locate equipment labels where accessible and visible.

3.3 PIPE LABEL INSTALLATION

A. Piping Color-Coding: Painting of piping is specified in ‘Painting and Finishing’.

B. Stenciled Pipe Label Option: Stenciled labels may be provided instead of manufactured pipe labels, at Installer's option. Install stenciled pipe labels complying with ASME A13.1 on each piping system.

1. Identification Paint: Use for contrasting background.
2. Stencil Paint: Use for pipe marking.

C. Locate pipe labels where piping is exposed or above accessible ceilings in finished spaces; machine rooms; accessible maintenance spaces such as shafts, tunnels, and plenums; and exterior exposed locations as follows:

1. Near each valve and control device.
2. Near each branch connection, excluding short takeoffs for fixtures and terminal units. Where flow pattern is not obvious, mark each pipe at branch.
3. Near penetrations through walls, floors, ceilings, and inaccessible enclosures.
4. At access doors, manholes, and similar access points that permit view of concealed piping.
5. Near major equipment items and other points of origination and termination.

6. Spaced at maximum intervals of 20 feet along each run. Reduce intervals to 15 feet in areas of congested piping and equipment.

7. On piping above removable acoustical ceilings. Omit intermediately spaced labels.

D. Pipe Label Color Schedule:

1. Conform to ASME A13.1

3.4 DUCT LABEL INSTALLATION

A. Install plastic-laminated duct labels with permanent adhesive on air ducts in the following color codes:

1. Blue: For exhaust-air ducts.

2. ASME A13.1 Colors and Designs: For hazardous material exhaust.

B. Stenciled Duct Label Option: Stenciled labels, showing service and flow direction may be provided instead of plastic-laminated duct labels, at Installer's option, if lettering larger than 1 inch high is needed for proper identification because of distance from normal location of required identification.

C. Locate labels near points where ducts enter into concealed spaces and at maximum intervals of 50 feet in each space where ducts are exposed or concealed by removable ceiling system.

3.5 VALVE-TAG INSTALLATION

A. Install tags on valves and control devices in piping systems, except check valves; valves within factory-fabricated equipment units; shutoff valves; faucets; convenience and lawn-watering hose connections; and HVAC terminal devices and similar roughing-in connections of end-use fixtures and units. List tagged valves in a valve schedule.

B. Valve-Tag Application Schedule: Tag valves according to size, shape, and color scheme and with captions similar to those indicated in the following subparagraphs:

1. Valve-Tag Size and Shape:

a. Hot Water: 2 inches round.

b. Gas: 2 inches square.

2. Valve-Tag Color:

a. Hot Water: Natural

b. Gas: Yellow.

3. Letter Color:

a. Hot Water: Black

b. Gas: Black

3.6 WARNING-TAG INSTALLATION

A. Write required message on, and attach warning tags to, equipment and other items where required.

END OF SECTION

SECTION 23 0593 – TESTING, ADJUSTING AND BALANCING

PART 1 - GENERAL

1.1 SUMMARY

A. Section Includes:

1. Contractor Responsibilities
2. Drawing and Construction Review
3. Factory testing
4. Field Testing
5. General procedures for Testing and Balancing
6. Verification of Controls Operation
7. Testing, Adjusting and Balancing of Air Systems:
    a. Exhaust systems
    b. Air supply systems
8. Leakage Testing, Air Distribution System
9. Measurement of final operating conditions of HVAC Systems.
10. Sound measurement of equipment operating conditions.
11. Vibration measurement of equipment operating conditions.
12. Measurement of the Indoor Air Quality (IAQ) after the completion of the final balancing.
13. Tolerances

B. Testing, balancing and adjusting shall in no way relieve the Contractor of the warranty requirements.

C. The Contractor shall furnish all fuel, water and electricity required in performing the testing, balancing and adjusting of mechanical systems.

1.2 SCOPE OF WORK

A. General:

1. Testing, adjust and confirm design airflows and water flow rates, pressure drops, operating pressures, temperatures and heat transfer performance for HVAC systems, including, but not limited to exhaust air systems, including all associated fans, diffusers, dampers and accessories, etc.
2. Provide all necessary labor, materials, products, equipment and services to balance and test all HVAC systems, to verify conformance to specified quantities, and to the design of the mechanical system and for the testing of all the fire safety ventilations systems.
3. Cooperate with all other trades, including, but not limited to, fire alarm, sheet metal and piping to ensure the Work is carried out without interference to other Work.

4. Provide openings required for pitot tube traverses. After balancing, close sheet metal openings with removable gasketed plugs. Submit samples of proposed plugs to the Engineer for approval.

5. Conduct regular inspections during the mechanical systems installation and report on ductwork installation (likely to produce abnormal leakage or restrictions to airflow), piping installation, proper placement of dampers or valves, and any circumstance which will encumber the testing and balancing of the mechanical systems.

6. Include all items of labor, materials, products, equipment and devices required to comply with standards and codes of the Authorities having Jurisdiction in accordance with the contract documents to balance all air and hydronic systems, to verify conformance to specified quantities and to the design of the mechanical system. Where quantities, sizes or other requirements indicated on the drawings or herein specified are in excess of the standard or local code requirements, the specifications and drawings shall govern.

B. All work related to the preparation of the systems shall be the responsibility of the Contractor. No work shall proceed on the Testing, Balancing and Adjusting until all items required to be completed prior to the start of TAB work outlined in this section are complete.

1.3 DEFINITIONS

A. AABC: Associated Air Balance Council.

B. NEBB: National Environmental Balancing Bureau.

C. TAB: Testing, adjusting, and balancing.

D. TABB: Testing, Adjusting, and Balancing Bureau.

E. TAB Specialist: An entity engaged to perform TAB Work

F. Systems testing, adjusting, and balancing is the process of checking and adjusting all the building environmental systems to produce the design objectives. It includes

1. The balance of air, and hydronic distribution systems.

2. Adjustment of all systems to provide design quantities and pressures.

3. Verification of performance of all equipment and automatic controls;

4. Sound and vibration measurements.

5. Indoor Air Quality (IAQ) measurements

G. Test: To determine quantitative performance of equipment.

H. Adjust: To regulate the specified air and fluid flow rates and air patterns at the terminal equipment (e.g., reduce fan speed, throttling, diffuser directional vane adjustment, etc.).

I. Balance: To proportion flows within the distribution system (submains, branches, and terminals) according to specified design quantities.

J. Procedure: Standardized approach and execution of sequence of work operations to yield reproducible results.

K. Report forms: Test data sheets arranged for collecting test data in logical order for submission and review. These data sheets should also form the permanent record to be used as the basis for required future testing, adjusting, and balancing.

L. Terminal: The point where the controlled fluid enters or leaves the distribution system. These are supply inlets on water terminals, supply outlets, return outlets on water terminals, and exhaust inlets registers, grilles, or louvers.

M. Main: Duct containing the system's major or entire flow.

N. Submain: Duct containing part of the systems' capacity and serving two or more branch mains.

O. Branch main: Duct serving two or more terminals.

P. Branch: Duct serving a single terminal.

Q. “Data Register”: See description hereinafter.

1.4 REFERENCE STANDARDS

A. All testing, balancing, and adjusting shall be performed in accordance with the latest applicable industry standards, those standards referenced in the applicable specifications, including the following:

1. Code for Design of Heating, Ventilation and Air Conditioning (GBJ 19-87, GB 50019-2003).
2. Environmental Air Quality Standards GB 3095-96.
3. Design Regulation for Residential Building GB50096-1999.
4. NEEB Testing, Adjusting and Balancing model specifications
5. NEBB “Procedural Standards for Testing, Adjusting and Balancing of Environmental Systems”
6. ASHRAE - Standard 111 - 1988 Practices for Measurement, Testing, Adjusting, and Balancing of Building Heating, Ventilation, Air Conditioning, and Refrigeration Systems.
7. ASHRAE - 2003 HVAC Applications Handbook: Chapter 37, Testing, Adjusting and Balancing.
8. SMACNA - HVAC System Testing, Adjusting and Balancing (TAB) and Certification of Testing, Adjusting and Balancing Technicians.
9. SMACNA “HVAC Air Duct Leakage Test Manual”, First Edition, 1985.

B. All equipment and material to be furnished and installed on this Project shall be in accordance with the requirements of the authorities having jurisdiction and suitable for its intended use on this Project.

1.5 SUBMITTALS

A. Qualification Data: Within 15 days of Contractor's Notice to Proceed, submit documentation that the TAB contractor and this Project's TAB team members meet the qualifications specified in "Quality Assurance" Article.

B. Contract Documents Examination Report: Within 30 days of Contractor's Notice to Proceed, submit the Contract Documents review report as specified in Part 3.

C. Strategies and Procedures Plan: Within 60 days of Contractor's Notice to Proceed, submit TAB strategies and step-by-step procedures as specified in "Preparation" Article.

D. Submittal data shall include, but not be limited to:

1. Air Balance Procedures, Recording Forms and Test Equipment.
2. Air Balance Test Reports.
3. Vibration and Alignment Readings.
4. Sound Level Reading Test Equipment and Reporting Forms.
5. Final Air Balance Readings.

E. Certified TAB reports.

F. Instrument calibration reports, to include the following:

1. Instrument type and make.
2. Serial number.
3. Application.
4. Dates of use.
5. Dates of calibration.

1.6 QUALITY ASSURANCE

A. Testing and Balancing Agency Qualifications:

1. The Contractor shall employ the services of an independent testing, adjusting, and balancing agency meeting the qualifications specified below, to be the single source of responsibility to test, adjust, and balance the building mechanical systems identified above, to produce the design objectives. Services shall include checking installations for conformity to design, measurement and establishment of the fluid quantities of the mechanical systems as required to meet design specifications, and recording and reporting the results.
2. The independent testing, adjusting, and balancing agency shall be qualified in those testing and balancing disciplines required for this project.
3. The air balance agency shall provide proof of having at least 5 years testing, adjusting and balancing experience, as well as having successfully completed at least five projects of similar size and scope.
4. The work must be performed by a qualified Testing, Adjusting and Balancing Technician who may be assisted by other TAB Technicians. The Testing, Adjusting and Balancing Technician is responsible for:
    a. Procedures to be followed
    b. Accuracy of all testing
    c. Integrity of recorded data
    d. Entering all data and reporting any abnormal or notable conditions on the report forms
    e. Initialing and dating each recorded data sheet

5. The General Section of the Balance Report shall include the names, and signatures, of the Technicians who were assigned to the project.

6. Contractor's Quality Assurance Responsibilities: This Contractor is solely responsible for quality control of the Work. Comply with the general requirements of the contract.

B. Indoor Air Quality (IAQ) Testing:

1. The Independent Testing, Adjusting and Balancing agency shall test the building air systems identified above, to produce an IAQ report.

2. The testing and balancing agency, shall provide which IAQ testing shall include checking installations for conformity to design, measurement and establishment of the fluid quantities of the mechanical systems as required to meet design specifications, and recording and reporting the results.

3. The testing and balancing agency shall provide proof of having at least 3 years testing experience, as well as having successfully completed at least three (3) projects of similar size and scope.

4. The General Section of the Report shall include the names, signatures, and registration numbers of the Technicians who were assigned to the project.

1.7 HVAC CONTRACTOR RESPONSIBILITIES

A. Prepare each system for testing and balancing.

B. Cooperate with the testing agencies, provide access to all work, equipment and systems. Operate individual equipment and systems as requested by the testing and balancing agency.

C. Put all heating, ventilating and air conditioning systems and equipment into full operation and shall continue the operation of same during each working day of testing and balancing. Operate systems under conditions required for proper testing, adjusting, and balancing.

D. Notify the Testing, Adjusting and Balancing Technician, The City and Engineer TWO WEEKS prior to time system will be ready for testing, adjusting, and balancing. Project readiness shall include:

1. Systems are started and running (fans have been checked for proper rotation).

2. Permanent electrical power wiring is complete.

3. Verification that all ductwork is fabricated and installed as specified.

4. Ceilings are installed in critical areas where diffuser air pattern adjustment may be required. Access to balancing devices is provided.

5. All equipment and ductwork access doors are securely closed.

6. A complete review of the Contractor’s Coordination Drawings for coordination of the provisions for the TAB process and instrumentation needed.

7. All balancing, smoke and fire/smoke dampers are installed and in fully open positions.

8. All isolation and balancing valves are open and control valves are operational.

9. System installation is complete, with Controls and Instrumentation installed and fully operational.

10. The Testing Agency will provide the necessary input in the form of recommendation, and engineering drawings to facilitate testing construction.

E. Where exhaust fans are provided with variable pitch sheaves, Contractor shall adjust sheaves, as required, at no additional cost to the The City, until desired Design Points (CFM and Static Pressure) are reached. If adjustment of the variable pitch sheaves is beyond the range of the sheaves, HVAC Contractor shall replace sheaves, as required, at no additional cost to the The City, until the desired Design Flow Points (Static Pressure) are reached. Where exhaust fan are specified with fixed ratio sheaves, HVAC Contractor shall provide a set of variable sheaves for initial adjustment and determination of proper RPM. HVAC Contractor shall provide the proper fixed sheaves and replace the variable sheaves and provide a final report verifying performance. This work shall be at no additional cost to the The City until desired Design Points (Flow and Static Pressure) are reached.

1.8 SEQUENCING AND SCHEDULING

A. Sequencing work to commence after completion of systems and schedule completion of work before Substantial Completion of Project.

B. TAB Contractor Qualifications: Engage a TAB entity certified by NEBB or TABB.

1. TAB Field Supervisor: Employee of the TAB contractor and certified by NEBB or TABB.

2. TAB Technician: Employee of the TAB contractor and who is certified by NEBB or TABB as a TAB technician.

C. TAB Conference: Meet with The City, Engineer, and Commissioning Authority on approval of the TAB strategies and procedures plan to develop a mutual understanding of the details. Require the participation of the TAB field supervisor and technicians. Provide seven days' advance notice of scheduled meeting time and location.

1. Agenda Items:

a. The Contract Documents examination report.

b. The TAB plan.

c. Coordination and cooperation of trades and subcontractors.

d. Coordination of documentation and communication flow.

D. Certify TAB field data reports and perform the following:

1. Review field data reports to validate accuracy of data and to prepare certified TAB reports.

2. Certify that the TAB team complied with the approved TAB plan and the procedures specified and referenced in this Specification.

E. TAB Report Forms: Use standard TAB contractor's forms approved by Engineer.

F. Instrumentation Type, Quantity, Accuracy, and Calibration: As described in ASHRAE 111, Section 5, "Instrumentation."

1.9 DRAWING AND CONSTRUCTION REVIEW

A. Perform a preconstruction review of the following documents:

1. Contract construction drawings
2. Contract specifications
3. Addenda
4. Submittal data
5. Shop drawings
6. Automatic Control drawings
7. Contractors Combined Services Drawings (all trades).

B. Prepare a report of the preconstruction review list of recommended changes to allow most effective balancing.

C. Perform a construction review of the mechanical installation during the progress of the project. Purpose of the reviews to be:

1. Identify potential problems for performing balancing.
2. Identify modifications which will aid balancing.
3. Schedule and coordinate balancing with other work and other trades.

D. Prepare a report of both preconstruction review and construction review to verify acceptance of installed conditions.

E. Pre-Balancing Conference: Prior to beginning of the testing, adjusting, and balancing procedures, the Contractor shall schedule and conduct a conference with The City, Engineer and representatives of installers of the mechanical systems. The objective of the conference is to review the preconstruction and construction report and final coordination and verification of system operation and readiness for testing, adjusting, and balancing.

1.10 PROJECT/SITE CONDITIONS

A. General: Do not proceed until systems requiring testing, adjusting and balancing are clean and free from debris, dirt, and discarded building materials.

B. Air balance and testing shall not begin until system has been completed and is in full working order. The Contractor shall put all heating, ventilating and air conditioning systems and equipment into full operation with the final filters in place on all air handling units and shall continue the operation of same during each working day of testing and balancing.

1.11 WARRANTY

A. Comply with the requirements of the General Conditions

1.12 COORDINATION

A. Notice: Provide seven days' advance notice for each test. Include scheduled test dates and times.

B. Perform TAB after leakage and pressure tests on air and water distribution systems have been satisfactorily completed.

PART 2 - PRODUCTS (NOT APPLICABLE)

PART 3 - EXECUTION

3.1 FACTORY TESTING

A. All factory testing where specified shall be performed in accordance with the latest applicable industry standards, with the manufacturer's recommendations and as specified in other sections of this work.

3.2 FIELD TESTING - GENERAL

A. During the progress of the Work, tests shall be made as specified herein, as specified in other sections of this work and as required by authorities having jurisdiction, including local authorities Inspection Department and Agency. Tests shall be conducted by the Contractor as part of the all HVAC Work and shall include all qualified personnel, equipment apparatus and services required to perform the tests.

B. The Contractor shall submit proposed test procedures, in soft and hard copy, recording forms and test equipment for review at least six (6) months prior to the start and execution of testing.

C. Leaks, damage, or defects discovered or resulting from tests shall be repaired or replaced to a like new condition. Leaky refrigerant pipe joints, ductwork, etc., shall be removed and replaced with acceptable materials.

D. All equipment and instruments required for tests as well as additional thermometer wells, gauge and instrument connections shall be furnished and installed at no additional cost to the The City.

E. All instruments used for testing and balancing must have been calibrated within a period of three (3) months prior to balancing. Instrument calibration shall be certified.

F. Submit six (6) hard copies and six (6) soft copies of each complete testing and balancing and IAQ report to the Contractor, and to the Engineer for Engineer's review. The Contractor shall submit individual testing and balance reports for air and hydronic systems within two (2) weeks after the completion of the testing and balancing of systems.

3.3 EXAMINATION

A. Examine the Contract Documents to become familiar with Project requirements and to discover conditions in systems' designs that may preclude proper TAB of systems and equipment.

B. Examine systems for installed balancing devices, such as test ports, gage cocks, thermometer wells, flow-control devices, balancing valves and fittings, and manual volume dampers. Verify that locations of these balancing devices are accessible. Submit report on findings to the Engineer.

C. Examine the approved submittals for HVAC systems and equipment.

D. Examine design data including HVAC system descriptions, statements of design assumptions for environmental conditions and systems' output, and statements of philosophies and assumptions about HVAC system and equipment controls.

E. Examine equipment performance data including fan and pump curves.

1. Relate performance data to Project conditions and requirements, including system effects that can create undesired or unpredicted conditions that cause reduced capacities in all or part of a system.

F. Examine system and equipment installations and verify that field quality-control testing, cleaning, and adjusting specified in individual Sections have been performed.

G. Examine test reports specified in individual system and equipment Sections.

H. Examine HVAC equipment and verify that bearings are greased, belts are aligned and tight, and equipment with functioning controls is ready for operation.

I. Examine strainers. Verify that startup screens are replaced by permanent screens with indicated perforations.

J. Examine control valves for proper installation for their intended function of diverting or mixing fluid flows.

K. Examine system pumps to ensure absence of entrained air in the suction piping.

L. Examine operating safety interlocks and controls on HVAC equipment.

M. Report deficiencies discovered before and during performance of TAB procedures. Observe and record system reactions to changes in conditions. Record default set points if different from indicated values.

3.4 PREPARATION

A. Prepare a TAB plan that includes strategies and step-by-step procedures.

B. Complete system-readiness checks and prepare reports. Verify the following:

1. Permanent electrical-power wiring is complete.

2. Automatic temperature-control systems are operational.

3. Equipment and duct access doors are securely closed.

4. Windows and doors can be closed so indicated conditions for system operations can be met.

3.5 GENERAL PROCEDURES FOR TESTING AND BALANCING

A. Perform testing and balancing procedures on each system according to the procedures contained in AABC's "National Standards for Total System Balance” and ASHRAE 111] and in this Section.

1. Comply with requirements in ASHRAE 62.1-2004, Section 7.2.2, "Air Balancing."

B. Cut insulation, ducts and equipment cabinets for installation of test probes to the minimum extent necessary for TAB procedures.

1. After testing and balancing, install test ports and duct access doors that comply with requirements specified under another section of this work.

2. Install and join new insulation that matches removed materials. Restore insulation, coverings, vapor barrier, and finish according to the requirements specified under another section of this work.

C. Mark equipment and balancing devices, including damper-control positions, valve position indicators, fan-speed-control levers, and similar controls and devices, with paint or other suitable, permanent identification material to show final settings.

D. Take and report testing and balancing measurements in inch-pound (IP) units.

3.6 VERIFICATION OF CONTROL OPERATION

A. General: Perform the checks outlined in the following for all air and water system controls:

B. Thermostats and humidistats - Verify calibration and operation of all thermostats and humidistats. Any Deficiencies shall be reported for correction. Recheck after correction. Record thermostat set point and output signal, space temperature.

C. Damper Operation - Verify operation and position for all dampers. Any Deficiencies shall be reported for correction. Recheck after correction. Record set point, airflow and space temperature.

D. Other Controls - Simulate control operations with control contractor in accordance with design requirements and manufacturer’s recommendations. Any deficiencies shall be reported for correction. Recheck after correction. Record thermostat set point and output signal, space temperature.

3.7 GENERAL PROCEDURES FOR BALANCING AIR SYSTEMS

A. Prepare test reports for both fans and outlets. Obtain manufacturer's outlet factors and recommended testing procedures. Crosscheck the summation of required outlet volumes with required fan volumes.

B. Prepare schematic diagrams of systems' "as-built" duct layouts.

C. Determine the best locations in main and branch ducts for accurate duct-airflow measurements.

D. Check airflow patterns from the outdoor-air louvers and dampers and the return- and exhaust-air dampers through the supply-fan discharge and mixing dampers.

E. Locate start-stop and disconnect switches, electrical interlocks, and motor starters.

F. Verify that motor starters are equipped with properly sized thermal protection.

G. Check dampers for proper position to achieve desired airflow path.

H. Check for airflow blockages.

I. Check condensate drains for proper connections and functioning.

J. Check for proper sealing of air-handling-unit components.

K. Verify that air duct system is sealed as specified in Section "Metal Ducts."

L. Set HVAC system's air flow rates and water flow rates within the following tolerances:

1. Supply, Return, and Exhaust Fans and Equipment with Fans: Plus or minus 5 percent.

2. Air Outlets and Inlets: Plus or minus 5 percent.

3. Heating-Water Flow Rate: Plus or minus 5 percent.

3.8 REPORTING

A. Initial Construction-Phase Report: Based on examination of the Contract Documents as specified in "Examination" Article, prepare a report on the adequacy of design for systems' balancing devices. Recommend changes and additions to systems' balancing devices to facilitate proper performance measuring and balancing. Recommend changes and additions to HVAC systems and general construction to allow access for performance measuring and balancing devices.

B. Status Reports: Prepare weekly progress reports to describe completed procedures, procedures in progress, and scheduled procedures. Include a list of deficiencies and problems found in systems being tested and balanced. Prepare a separate report for each system and each building floor for systems serving multiple floors.

3.9 FINAL REPORT

A. General: Prepare a certified written report; tabulate and divide the report into separate sections for tested systems and balanced systems.

1. Include a certification sheet at the front of the report's binder, signed and sealed by the certified testing and balancing engineer.
2. Include a list of instruments used for procedures, along with proof of calibration.

B. Final Report Contents: In addition to certified field-report data, include the following:

1. Fan curves.
2. Manufacturers' test data.
3. Field test reports prepared by system and equipment installers.
4. Other information relative to equipment performance; do not include Shop Drawings and product data.

C. General Report Data: In addition to form titles and entries, include the following data:

1. Title page.
2. Name and address of the TAB contractor.
3. Project name.
4. Project location.
5. Engineer's name and address.
6. Engineer's name and address.
7. Contractor's name and address.
8. Report date.
9. Signature of TAB supervisor who certifies the report.
10. Table of Contents with the total number of pages defined for each section of the report. Number each page in the report.
11. Summary of contents including the following:
    a. Indicated versus final performance.
    b. Notable characteristics of systems.

c. Description of system operation sequence if it varies from the Contract Documents.

12. Nomenclature sheets for each item of equipment.

13. Data for all equipment, including manufacturer's name, type, size, and fittings.

14. Notes to explain why certain final data in the body of reports vary from indicated values.

15. Test conditions for fans and pump performance forms including the following:

    a. Settings for outdoor-, return-, and exhaust-air dampers.

    b. Conditions of filters.

    c. Fan drive settings including settings and percentage of maximum pitch diameter.

    d. Other system operating conditions that affect performance.

D. System Diagrams: Include schematic layouts of air distribution systems. Present each system with single-line diagram and include the following:

1. Quantities of exhaust airflows.

2. Duct, outlet, and inlet sizes.

3. Position of balancing devices.

E. Fan Test Reports: For supply, return, and exhaust fans, include the following:

1. Fan Data:

    a. System identification.

    b. Location.

    c. Make and type.

    d. Model number and size.

    e. Manufacturer's serial number.

    f. Arrangement and class.

    g. Sheave make, size in inches (mm), and bore.

    h. Center-to-center dimensions of sheave, and amount of adjustments in inches (mm).

2. Motor Data:

    a. Motor make, and frame type and size.

    b. Horsepower and rpm.

    c. Volts, phase, and hertz.

    d. Full-load amperage and service factor.

    e. Sheave make, size in inches (mm), and bore.

    f. Center-to-center dimensions of sheave, and amount of adjustments in inches (mm).

g. Number, make, and size of belts.

3. Test Data (Indicated and Actual Values):
   a. Total airflow rate in cfm (L/s).
   b. Total system static pressure in inches wg (Pa).
   c. Fan rpm.
   d. Discharge static pressure in inches wg (Pa).
   e. Suction static pressure in inches wg (Pa).
4. Report Data:
   a. Instrument type and make.
   b. Serial number.
   c. Application.
   d. Dates of use.
   e. Dates of calibration.

3.10 INSPECTIONS

A. Final Inspection:
   1. After testing and balancing are complete, operate each system and randomly check measurements to verify that the system is operating according to the final test and balance readings documented in the final report.
   2. Check the following for each system:
      a. Measure airflow of at one exhaust fan.
      b. Measure water flow.
      c. Measure room temperature at each thermostat/temperature sensor. Compare the reading to the set point.
      d. Verify that balancing devices are marked with final balance position.
      e. Note deviations from the Contract Documents in the final report.
   3. The TAB contractor's test and balance engineer shall conduct the inspection in the presence of Agency.
   4. If rechecks yield measurements that differ from the measurements documented in the final report by more than the tolerances allowed, the measurements shall be noted as "FAILED."
   5. If the number of "FAILED" measurements is greater than 10 percent of the total measurements checked during the final inspection, the testing and balancing shall be considered incomplete and shall be rejected.

B. TAB Work will be considered defective if it does not pass final inspections. If TAB Work fails, proceed as follows:
   1. Recheck all measurements and make adjustments. Revise the final report and balancing device settings to include all changes; resubmit the final report and request a second final inspection.

2. If the second final inspection also fails, The City may contract the services of another TAB contractor to complete TAB Work according to the Contract Documents and deduct the cost of the services from the original TAB contractor's final payment.

C. Prepare test and inspection reports.

3.11 ADDITIONAL TESTS

A. Seasonal Periods: If initial TAB procedures were not performed during near-peak summer and winter conditions, perform additional TAB during near-peak summer and winter conditions.

END OF SECTION

SECTION 23 0713 – DUCT INSULATION

PART 1 - GENERAL

1.1 SUMMARY

A. Section includes

1. Insulation materials
2. Adhesives
3. Mastics
4. Lagging Adhesives
5. Factory Applied Jackets
6. Tapes
7. Securements
8. Corner Angle

1.2 REFERENCE STANDARDS

A. SMACNA

B. ASHRAE

C. NFPA

D. ASTM

E. New York City Construction Code

1.3 REFERENCE STANDARDS

A. Duct covering and lining, including adhesives when used, shall have a flame spread index not more than 25 and a smoke-developed index not more than 50, when tested in accordance with ASTM E 84 or UL 723, using the specimen preparation and mounting procedures of ASTM E 2331.

B. Duct coverings and linings shall not flame, glow, smolder or smoke when tested in accordance with ASTM C 411 at the temperature to which they are exposed in service. The test temperature shall not fall below 250 ºF.

C. Factory label insulation and jacket materials and adhesive, mastic, tapes, and cement material containers, with appropriate markings of applicable testing agency.

D. Mockups: Before installing insulation, build mockups for each type of insulation and finish listed below to demonstrate quality of insulation application and finishes. Build mockups in the location indicated or, if not indicated, as directed by Engineer. Use materials indicated for the completed Work.

1. Ductwork Mockups:

a. One 10-foot section each of rectangular and round straight duct.

b. One each of a 90-degree mitered round and rectangular elbow, and one each of a 90-degree radius round and rectangular elbow.

c. One rectangular branch takeoff and one round branch takeoff from a rectangular duct. One round tee fitting.

d. One rectangular and round transition fitting.

e. Four support hangers for round and rectangular ductwork.

f. Each type of damper and specialty.

2. For each mockup, fabricate cutaway sections to allow observation of application details for insulation materials, adhesives, mastics, attachments, and jackets.

3. Notify Resident Engineer seven days in advance of dates and times when mockups will be constructed.

4. Obtain Resident Engineer's approval of mockups before starting insulation application.

5. Approval of mockups does not constitute approval of deviations from the Contract Documents contained in mockups unless Engineer specifically approves such deviations in writing.

6. Maintain mockups during construction in an undisturbed condition as a standard for judging the completed Work.

7. Demolish and remove mockups when directed.

E. ASHRAE/IESNA Compliance: Applicable requirements in ASHRAE/IESNA 90.1-2004.

F. SMACNA - HVAC Duct Construction Standards, Latest Edition.

G. SMACNA – HVAC Air Duct Leakage Test Manual.

H. The contractor must comply with the specification in its entirety. If on inspections, changes have been made without prior approval, the contractor will make the applicable changes to comply with this specification, at the contractor's expense.

I. At the discretion of the Engineer, sheet metal gauges, and reinforcing may be checked at various times to verify all duct construction is in compliance. If on inspections, changes have been made without prior approval, the contractor will make the applicable changes to comply with this specification, at the contractor's expense.

1.4 SUBMITTALS

A. Product Data: For each type of product indicated. Include thermal conductivity, water-vapor permeance thickness, and jackets (both factory- and field-applied if any).

B. Shop Drawings: Include plans, elevations, sections, details, and attachments to other work.

1. Detail application of protective shields, saddles, and inserts at hangers for each type of insulation and hanger.

2. Detail insulation application at elbows, fittings, dampers, specialties and flanges for each type of insulation.

3. Detail application of field-applied jackets.

4. Detail application at linkages of control devices.

C. Samples: For each type of insulation and jacket indicated. Identify each Sample, describing product and intended use. Sample sizes are as follows:

1. Sheet Form Insulation Materials: 12 inches square.
2. Sheet Jacket Materials: 12 inches square.
3. Manufacturer's Color Charts: For products where color is specified, show the full range of colors available for each type of finish material.

D. Material Test Reports: From a qualified testing agency acceptable to authorities having jurisdiction indicating, interpreting, and certifying test results for compliance of insulation materials, sealers, attachments, cements, and jackets, with requirements indicated. Include dates of tests and test methods employed.

1.5 DELIVERY, STORAGE, AND HANDLING

A. Packaging: Insulation material containers shall be marked by manufacturer with appropriate ASTM standard designation, type and grade, and maximum use temperature.

1.6 COORDINATION

A. Coordinate sizes and locations of supports, hangers, and insulation shields specified in Section 230529 "Hangers and Supports for HVAC Piping and Equipment."

B. Coordinate clearance requirements with duct Installer for duct insulation application. Before preparing ductwork Shop Drawings, establish and maintain clearance requirements for installation of insulation and field-applied jackets and finishes and for space required for maintenance.

C. Coordinate installation and testing of heat tracing.

1.7 SCHEDULING

A. Schedule insulation application after pressure testing systems and, where required, after installing and testing heat tracing. Insulation application may begin on segments that have satisfactory test results.

B. Complete installation and concealment of plastic materials as rapidly as possible in each area of construction.

PART 2 - PRODUCTS

2.1 INSULATION MATERIALS

A. Comply with requirements in "Duct Insulation Schedule, General," "Indoor Duct and Plenum Insulation Schedule," and "Aboveground, Outdoor Duct and Plenum Insulation Schedule" articles for where insulating materials shall be applied.

B. Products shall not contain asbestos, lead, mercury, or mercury compounds.

C. Products that come in contact with stainless steel shall have a leachable chloride content of less than 50 ppm when tested according to ASTM C 871.

D. Insulation materials for use on austenitic stainless steel shall be qualified as acceptable according to ASTM C 795.

E. Foam insulation materials shall not use CFC or HCFC blowing agents in the manufacturing process.

F. Mineral-Fiber Blanket Insulation: Mineral or glass fibers bonded with a thermosetting resin. Comply with ASTM C 553, Type II and ASTM C 1290, Type III with factory-applied

FSK jacket. Factory-applied jacket requirements are specified in "Factory-Applied Jackets" Article.

1. Manufacture: Subject to compliance with requirements, provide products by one of the following:
    a. CertainTeed
    b. John Manville; a Berkshire Hathaway Company
    c. Knauf Insulation
    d. or approved equal

G. Mineral-Fiber Board Insulation: Mineral or glass fibers bonded with a thermosetting resin. Comply with ASTM C 612, Type IA or Type IB. For duct and plenum applications, provide insulation with factory-applied FSK jacket. Factory-applied jacket requirements are specified in "Factory-Applied Jackets" Article.

1. Manufacture: Subject to compliance with requirements, provide products by one of the following:
    a. CertainTeed
    b. John Manville; a Berkshire Hathaway Company
    c. Knauf Insulation
    d. or approved equal

2.2 FIRE-RATED INSULATION SYSTEMS

A. Fire-Rated Board: Structural-grade, press-molded, xonolite calcium silicate, fireproofing board suitable for operating temperatures up to 1700 deg F. Comply with ASTM C 656, Type II, Grade 6. Tested and certified to provide a 2 hour fire rating by an NRTL acceptable to authorities having jurisdiction.

B. Fire-Rated Blanket: High-temperature, flexible, blanket insulation with FSK jacket that is tested and certified to provide a 2 hour fire rating by an NRTL acceptable to authorities having jurisdiction.

2.3 ADHESIVES

A. Materials shall be compatible with insulation materials, jackets, and substrates and for bonding insulation to itself and to surfaces to be insulated unless otherwise indicated.

B. Mineral-Fiber Adhesive: Comply with MIL-A-3316C, Class 2, Grade A.

1. Manufacture: Subject to compliance with requirements, provide products by one of the following:
    a. Childers Brand; H.B Fuller Construction Products
    b. Eagle Bridges; Marathon Industries
    c. Foster Brand; H.B Fuller Construction Products
    d. or approved equal

C. ASJ Adhesive, and FSK Jacket Adhesive: Comply with MIL-A-3316C, Class 2, Grade A for bonding insulation jacket lap seams and joints.

1. Manufacture: Subject to compliance with requirements, provide products by one of the following:
    a. Childers Brand; H.B Fuller Construction Products
    b. Eagle Bridges; Marathon Industries
    c. Foster Brand; H.B Fuller Construction Products
    d. or approved equal

2.4 MASTICS

A. Materials shall be compatible with insulation materials, jackets, and substrates; comply with MIL-PRF-19565C, Type II.

B. Vapor-Barrier Mastic: Water based; suitable for indoor use on below ambient services.
    1. Manufacture: Subject to compliance with requirements, provide products by one of the following:
        a. Childers Brand; H.B Fuller Construction Products
        b. Foster Brand; H.B Fuller Construction Products
        c. Knauf Insulation
        d. or approved equal
    2. Water-Vapor Permeance: ASTM E 96/E 96M, Procedure B, 0.013 perm at 43-mil dry film thickness.
    3. Service Temperature Range: Minus 20 to plus 180 deg F.
    4. Solids Content: ASTM D 1644, 58 percent by volume and 70 percent by weight.
    5. Color: White.

C. Vapor-Barrier Mastic: Solvent based; suitable for indoor use on below ambient services.
    1. Manufacture: Subject to compliance with requirements, provide products by one of the following:
        a. Childers Brand; H.B Fuller Construction Products
        b. Foster Brand; H.B Fuller Construction Products
        c. Knauf Insulation
        d. or approved equal
    2. Water-Vapor Permeance: ASTM F 1249, 0.05 perm at 35-mil dry film thickness.
    3. Service Temperature Range: 0 to 180 deg F.
    4. Solids Content: ASTM D 1644, 44 percent by volume and 62 percent by weight.
    5. Color: White.

D. Vapor-Barrier Mastic: Solvent based; suitable for outdoor use on below ambient services.
    1. Manufacture: Subject to compliance with requirements, provide products by one of the following:
        a. Childers Brand; H.B Fuller Construction Products

b. Foster Brand; H.B Fuller Construction Products

c. Knauf Insulation

d. or approved equal

2. Water-Vapor Permeance: ASTM F 1249, 0.05 perm at 30-mil dry film thickness.

3. Service Temperature Range: Minus 50 to plus 220 deg F.

4. Solids Content: ASTM D 1644, 33 percent by volume and 46 percent by weight.

5. Color: White.

E. Breather Mastic: Water based; suitable for indoor and outdoor use on above ambient services.

1. Manufacture: Subject to compliance with requirements, provide products by one of the following:

a. Childers Brand; H.B Fuller Construction Products

b. Foster Brand; H.B Fuller Construction Products

c. Knauf Insulation

d. or approved equal

2. Water-Vapor Permeance: ASTM F 1249, 1.8 perms at 0.0625-inch dry film thickness.

3. Service Temperature Range: Minus 20 to plus 180 deg F.

4. Solids Content: 60 percent by volume and 66 percent by weight.

5. Color: White.

2.5 LAGGING ADHESIVES

A. Description: Comply with MIL-A-3316C, Class I, Grade A and shall be compatible with insulation materials, jackets, and substrates.

1. Manufacture: Subject to compliance with requirements, provide products by one of the following:

a. Childers Brand; H.B Fuller Construction Products

b. Foster Brand; H.B Fuller Construction Products

c. Knauf Insulation

d. or approved equal

2. Fire-resistant, water-based lagging adhesive and coating for use indoors to adhere fire-resistant lagging cloths over duct insulation.

3. Service Temperature Range: 0 to plus 180 deg F.

4. Color: White.

2.6 SEALANTS

A. FSK and Metal Jacket Flashing Sealants:

1. Manufacture: Subject to compliance with requirements, provide products by one of the following:

a. Childers Brand; H.B Fuller Construction Products

b. Eagle Bridges; Marathon Industries

c. Foster Brand; H.B Fuller Construction Products

d. or approved equal

2. Materials shall be compatible with insulation materials, jackets, and substrates.

3. Fire- and water-resistant, flexible, elastomeric sealant.

4. Service Temperature Range: Minus 40 to plus 250 deg F.

5. Color: Aluminum.

2.7 FACTORY-APPLIED JACKETS

A. Insulation system schedules indicate factory-applied jackets on various applications. When factory-applied jackets are indicated, comply with the following:

1. FSK Jacket: Aluminum-foil, fiberglass-reinforced scrim with kraft-paper backing; complying with ASTM C 1136, Type II.

2.8 TAPES

A. FSK Tape: Foil-face, vapor-retarder tape matching factory-applied jacket with acrylic adhesive; complying with ASTM C 1136.

1. Manufacture: Subject to compliance with requirements, provide products by one of the following:

a. Avery Dennison Corporation, Specialty Tapes Division

b. Compac Corporation

c. Knauf Insulation

d. or approved equal

2. Width: 3 inches.

3. Thickness: 6.5 mils.

4. Adhesion: 90 ounces force/inch in width.

5. Elongation: 2 percent.

6. Tensile Strength: 40 lbf/inch in width.

7. FSK Tape Disks and Squares: Precut disks or squares of FSK tape.

2.9 SECUREMENTS

A. Bands:

1. Manufacture: Subject to compliance with requirements, provide products by one of the following:

a. ITW Insulation Systems; Illinois Tool Works, Inc.

b. RPR Products, Inc.

c. Band – It Company Limited

d. or approved equal

2. Stainless Steel: ASTM A 167 or ASTM A 240, Type 304 or Type 316; 0.015 inch thick, 1/2 inch wide with wing seal or closed seal.

3. Aluminum: ASTM B 209 , Alloy 3003, 3005, 3105, or 5005; Temper H-14, 0.020 inch thick, 1/2 inch wide with wing seal or closed seal.

4. Springs: Twin spring set constructed of stainless steel with ends flat and slotted to accept metal bands. Spring size determined by manufacturer for application.

B. Insulation Pins and Hangers:

1. Capacitor-Discharge-Weld Pins: Copper- or zinc-coated steel pin, fully annealed for capacitor-discharge welding, 0.106-inch diameter shank, length to suit depth of insulation indicated.

A. Manufacture: Subject to compliance with requirements, provide products by one of the following:

1) AGM Industries, Inc.

2) Hardcast, Inc.

3) Gemo

4) or approved equal

2. Cupped-Head, Capacitor-Discharge-Weld Pins: Copper- or zinc-coated steel pin, fully annealed for capacitor-discharge welding, 0.106-inch diameter shank, and length to suit depth of insulation indicated with integral 1-1/2-inch galvanized carbon-steel washer.

a. Manufacture: Subject to compliance with requirements, provide products by one of the following:

1) AGM Industries, Inc.

2) Hardcast, Inc.

3) Midwest Eastern Fasteners, Inc.

4) or approved equal

3. Metal, Adhesively Attached, Perforated-Base Insulation Hangers: Baseplate welded to projecting spindle that is capable of holding insulation, of thickness indicated, and securely in position indicated when self-locking washer is in place. Comply with the following requirements:

a. Manufacture: Subject to compliance with requirements, provide products by one of the following:

1) AGM Industries, Inc.

2) Hardcast, Inc.

3) Midwest Eastern Fasteners, Inc.

4) or approved equal

b. Baseplate: Perforated, galvanized carbon-steel sheet, 0.030 inch thick by 2 inches square.

c. Spindle: Copper- or zinc-coated, low-carbon steel fully annealed, 0.106-inch diameter shank, length to suit depth of insulation indicated.

d. Adhesive: Recommended by hanger manufacturer. Product with demonstrated capability to bond insulation hanger securely to substrates indicated without damaging insulation, hangers, and substrates.

4. Nonmetal, Adhesively Attached, Perforated-Base Insulation Hangers: Baseplate fastened to projecting spindle that is capable of holding insulation, of thickness indicated, and securely in position indicated when self-locking washer is in place. Comply with the following requirements:

   a. Manufacture: Subject to compliance with requirements, provide products by one of the following:

      1) AGM Industries, Inc.

      2) Hardcast, Inc.

      3) Gemo

      4) Midwest Eastern Fasteners, Inc.

      5) or approved equal

   b. Baseplate: Perforated, nylon sheet, 0.030 inch thick by 1-1/2 inches in diameter.

   c. Spindle: Nylon, 0.106-inch diameter shank, length to suit depth of insulation indicated, up to 2-1/2 inches.

   d. Adhesive: Recommended by hanger manufacturer. Product with demonstrated capability to bond insulation hanger securely to substrates indicated without damaging insulation, hangers, and substrates.

5. Self-Sticking-Base Insulation Hangers: Baseplate welded to projecting spindle that is capable of holding insulation, of thickness indicated, and securely in position indicated when self-locking washer is in place. Comply with the following requirements:

   a. Manufacture: Subject to compliance with requirements, provide products by one of the following:

      1) AGM Industries, Inc.

      2) Hardcast, Inc.

      3) Gemo

      4) Midwest Eastern Fasteners, Inc.

      5) or approved equal

   b. Baseplate: Galvanized carbon-steel sheet, 0.030 inch thick by 2 inches square.

   c. Spindle: Copper- or zinc-coated, low-carbon steel fully annealed, 0.106-inch diameter shank, length to suit depth of insulation indicated.

   d. Adhesive-backed base with a peel-off protective cover.

6. Insulation-Retaining Washers: Self-locking washers formed from 0.016-inch thick, galvanized-steel sheet, with beveled edge sized as required to hold insulation securely in place but not less than 1-1/2 inches in diameter.

a. Manufacture: Subject to compliance with requirements, provide products by one of the following:

1) AGM Industries, Inc.

2) Hardcast, Inc.

3) Gemo

4) Midwest Eastern Fasteners, Inc.

5) or approved equal

b. Protect ends with capped self-locking washers incorporating a spring steel insert to ensure permanent retention of cap in exposed locations.

7. Nonmetal Insulation-Retaining Washers: Self-locking washers formed from 0.016-inch thick nylon sheet, with beveled edge sized as required to hold insulation securely in place but not less than 1-1/2 inches in diameter.

a. Manufacture: Subject to compliance with requirements, provide products by one of the following:

1) AGM Industries, Inc.

2) Hardcast, Inc.

3) Gemo

4) Midwest Eastern Fasteners, Inc.

5) or approved equal

C. Staples: Outward-clinching insulation staples, nominal 3/4-inch wide, stainless steel or Monel.

D. Wire: 0.062 inch soft-annealed, stainless steel

a. Manufacture: Subject to compliance with requirements, provide products by one of the following:

1) AGM Industries, Inc.

2) Hardcast, Inc.

3) Gemo

4) Midwest Eastern Fasteners, Inc.

5) or approved equal

2.10 CORNER ANGLES

A. Aluminum Corner Angles: 0.040 inch thick, minimum 1 by 1 inch , aluminum according to ASTM B 209 , Alloy 3003, 3005, 3105, or 5005; Temper H-14.

B. Stainless-Steel Corner Angles: 0.024 inch thick, minimum 1 by 1 inch, stainless steel according to ASTM A 167 or ASTM A 240/A 240M, Type 304 or Type 316.

PART 3 - EXECUTION

3.1 EXAMINATION

A. Examine substrates and conditions for compliance with requirements for installation tolerances and other conditions affecting performance of insulation application.

1. Verify that systems to be insulated have been tested and are free of defects.

2. Verify that surfaces to be insulated are clean and dry.

B. Proceed with installation only after unsatisfactory conditions have been corrected.

3.2 PREPARATION

A. Surface Preparation: Clean and dry surfaces to receive insulation. Remove materials that will adversely affect insulation application.

3.3 GENERAL INSTALLATION REQUIREMENTS

A. Install insulation materials, accessories, and finishes with smooth, straight, and even surfaces; free of voids throughout the length of ducts and fittings.

B. Install insulation materials, vapor barriers or retarders, jackets, and thicknesses required for each item of duct system as specified in insulation system schedules.

C. Install accessories compatible with insulation materials and suitable for the service. Install accessories that do not corrode, soften, or otherwise attack insulation or jacket in either wet or dry state.

D. Install insulation with longitudinal seams at top and bottom of horizontal runs.

E. Install multiple layers of insulation with longitudinal and end seams staggered.

F. Keep insulation materials dry during application and finishing.

G. Install insulation with tight longitudinal seams and end joints. Bond seams and joints with adhesive recommended by insulation material manufacturer.

H. Install insulation with least number of joints practical.

I. Where vapor barrier is indicated, seal joints, seams, and penetrations in insulation at hangers, supports, anchors, and other projections with vapor-barrier mastic.

1. Install insulation continuously through hangers and around anchor attachments.

2. For insulation application where vapor barriers are indicated, extend insulation on anchor legs from point of attachment to supported item to point of attachment to structure. Taper and seal ends at attachment to structure with vapor-barrier mastic.

3. Install insert materials and install insulation to tightly join the insert. Seal insulation to insulation inserts with adhesive or sealing compound recommended by insulation material manufacturer.

J. Apply adhesives, mastics, and sealants at manufacturer's recommended coverage rate and wet and dry film thicknesses.

K. Install insulation with factory-applied jackets as follows:

1. Draw jacket tight and smooth.

2. Cover circumferential joints with 3-inch wide strips, of same material as insulation jacket. Secure strips with adhesive and outward clinching staples along both edges of strip, spaced 4 inches o.c.

3. Overlap jacket longitudinal seams at least 1-1/2 inches. Clean and dry surface to receive self-sealing lap. Staple laps with outward clinching staples along edge at 4 inches o.c.

   a. For below ambient services, apply vapor-barrier mastic over staples.

4. Cover joints and seams with tape, according to insulation material manufacturer's written instructions, to maintain vapor seal.

5. Where vapor barriers are indicated, apply vapor-barrier mastic on seams and joints and at ends adjacent to duct flanges and fittings.

L. Cut insulation in a manner to avoid compressing insulation more than 75 percent of its nominal thickness.

M. Finish installation with systems at operating conditions. Repair joint separations and cracking due to thermal movement.

N. Repair damaged insulation facings by applying same facing material over damaged areas. Extend patches at least 4 inches beyond damaged areas. Adhere, staple, and seal patches similar to butt joints.

3.4 PENETRATIONS

A. Insulation Installation at Roof Penetrations: Install insulation continuously through roof penetrations.

1. Seal penetrations with flashing sealant.

2. For applications requiring only indoor insulation, terminate insulation above roof surface and seal with joint sealant. For applications requiring indoor and outdoor insulation, install insulation for outdoor applications tightly joined to indoor insulation ends. Seal joint with joint sealant.

3. Extend jacket of outdoor insulation outside roof flashing at least 2 inches below top of roof flashing.

4. Seal jacket to roof flashing with flashing sealant.

B. Insulation Installation at Aboveground Exterior Wall Penetrations: Install insulation continuously through wall penetrations.

1. Seal penetrations with flashing sealant.

2. For applications requiring only indoor insulation, terminate insulation inside wall surface and seal with joint sealant. For applications requiring indoor and outdoor insulation, install insulation for outdoor applications tightly joined to indoor insulation ends. Seal joint with joint sealant.

3. Extend jacket of outdoor insulation outside wall flashing and overlap wall flashing at least 2 inches

4. Seal jacket to wall flashing with flashing sealant.

C. Insulation Installation at Interior Wall and Partition Penetrations (That Are Not Fire Rated): Install insulation continuously through walls and partitions.

D. Insulation Installation at Fire-Rated Wall and Partition Penetrations: Terminate insulation at fire damper sleeves for fire-rated wall and partition penetrations. Externally insulate damper sleeves to match adjacent insulation and overlap duct insulation at least 2 inches.

1. Comply with requirements in Section 078413 "Penetration Firestopping."

E. Insulation Installation at Floor Penetrations:

1. Duct: For penetrations through fire-rated assemblies, terminate insulation at fire damper sleeves and externally insulate damper sleeve beyond floor to match adjacent duct insulation. Overlap damper sleeve and duct insulation at least 2 inches.

2. Seal penetrations through fire-rated assemblies. Comply with requirements in Section 078413 "Penetration Firestopping."

3.5 INSTALLATION OF FLEXIBLE ELASTOMERIC INSULATION

A. Seal longitudinal seams and end joints with manufacturers recommended adhesive to eliminate openings in insulation that allow passage of air to surface being insulated.

3.6 INSTALLATION OF MINERAL-FIBER INSULATION

A. Blanket Insulation Installation on Ducts and Plenums: Secure with adhesive and insulation pins.

1. Apply adhesives according to manufacturer's recommended coverage rates per unit area, for 100 percent coverage of duct and plenum surfaces.

2. Apply adhesive to entire circumference of ducts and to all surfaces of fittings and transitions.

3. Install either capacitor-discharge-weld pins and speed washers or cupped-head, capacitor-discharge-weld pins on sides and bottom of horizontal ducts and sides of vertical ducts as follows:

a. On duct sides with dimensions 18 inches and smaller, place pins along longitudinal centerline of duct. Space 3 inches maximum from insulation end joints, and 16 inches o.c.

b. On duct sides with dimensions larger than 18 inches, place pins 16 inches o.c. each way, and 3 inches maximum from insulation joints. Install additional pins to hold insulation tightly against surface at cross bracing.

c. Pins may be omitted from top surface of horizontal, rectangular ducts and plenums.

d. Do not overcompress insulation during installation.

e. Impale insulation over pins and attach speed washers.

f. Cut excess portion of pins extending beyond speed washers or bend parallel with insulation surface. Cover exposed pins and washers with tape matching insulation facing.

4. For ducts and plenums with surface temperatures below ambient, install a continuous unbroken vapor barrier. Create a facing lap for longitudinal seams and end joints with insulation by removing 2 inches from one edge and one end of insulation segment. Secure laps to adjacent insulation section with 1/2-inch

outward-clinching staples, 1 inch o.c. Install vapor barrier consisting of factory- or field-applied jacket, adhesive, vapor-barrier mastic, and sealant at joints, seams, and protrusions.

a. Repair punctures, tears, and penetrations with tape or mastic to maintain vapor-barrier seal.

b. Install vapor stops for ductwork and plenums operating below 50 deg F at 18-foot intervals. Vapor stops shall consist of vapor-barrier mastic applied in a Z-shaped pattern over insulation face, along butt end of insulation, and over the surface. Cover insulation face and surface to be insulated a width equal to two times the insulation thickness, but not less than 3 inches.

5. Overlap unfaced blankets a minimum of 2 inches on longitudinal seams and end joints. At end joints, secure with steel bands spaced a maximum of 18 inches o.c.

6. Install insulation on rectangular duct elbows and transitions with a full insulation section for each surface. Install insulation on round and flat-oval duct elbows with individually mitered gores cut to fit the elbow.

7. Insulate duct stiffeners, hangers, and flanges that protrude beyond insulation surface with 6-inch wide strips of same material used to insulate duct. Secure on alternating sides of stiffener, hanger, and flange with pins spaced 6 inches o.c.

B. Board Insulation Installation on Ducts and Plenums: Secure with adhesive and insulation pins.

1. Apply adhesives according to manufacturer's recommended coverage rates per unit area.

2. Apply adhesive to entire circumference of ducts and to all surfaces of fittings and transitions.

3. Install either capacitor-discharge-weld pins and speed washers or cupped-head, capacitor-discharge-weld pins on sides and bottom of horizontal ducts and sides of vertical ducts as follows:

a. On duct sides with dimensions 18 inches and smaller, place pins along longitudinal centerline of duct. Space 3 inches maximum from insulation end joints, and 16 inches o.c.

b. On duct sides with dimensions larger than 18 inches, space pins 16 inches o.c. each way, and 3 inches maximum from insulation joints. Install additional pins to hold insulation tightly against surface at cross bracing.

c. Pins may be omitted from top surface of horizontal, rectangular ducts and plenums.

d. Do not overcompress insulation during installation.

e. Cut excess portion of pins extending beyond speed washers or bend parallel with insulation surface. Cover exposed pins and washers with tape matching insulation facing.

4. For ducts and plenums with surface temperatures below ambient, install a continuous unbroken vapor barrier. Create a facing lap for longitudinal seams and end joints with insulation by removing 2 inches from one edge and one end of insulation segment. Secure laps to adjacent insulation section with 1/2-inch outward-clinching staples, 1 inch o.c. Install vapor barrier consisting of factory- or

field-applied jacket, adhesive, vapor-barrier mastic, and sealant at joints, seams, and protrusions.

a. Repair punctures, tears, and penetrations with tape or mastic to maintain vapor-barrier seal.

b. Install vapor stops for ductwork and plenums operating below 50 deg F at 18-foot intervals. Vapor stops shall consist of vapor-barrier mastic applied in a Z-shaped pattern over insulation face, along butt end of insulation, and over the surface. Cover insulation face and surface to be insulated a width equal to two times the insulation thickness, but not less than 3 inches.

5. Install insulation on rectangular duct elbows and transitions with a full insulation section for each surface. Groove and score insulation to fit as closely as possible to outside and inside radius of elbows. Install insulation on round and flat-oval duct elbows with individually mitered gores cut to fit the elbow.

6. Insulate duct stiffeners, hangers, and flanges that protrude beyond insulation surface with 6-inch wide strips of same material used to insulate duct. Secure on alternating sides of stiffener, hanger, and flange with pins spaced 6 inches o.c.

3.7 FIRE-RATED INSULATION SYSTEM INSTALLATION

A. Where fire-rated insulation system is indicated, secure system to ducts and duct hangers and supports to maintain a continuous fire rating.

B. Insulate duct access panels and doors to achieve same fire rating as duct.

C. Install firestopping at penetrations through fire-rated assemblies. Fire-stop systems are specified in Section 078413 "Penetration Firestopping."

3.8 DUCT INSULATION SCHEDULE, GENERAL

A. Plenums and Ducts Requiring Insulation:

1. Indoor, concealed supply and outdoor air.

2. Indoor, exposed supply and outdoor air.

3. Indoor, concealed return located in unconditioned space.

4. Indoor, exposed return located in unconditioned space.

B. Items Not Insulated:

1. Fibrous-glass ducts.

2. Metal ducts with duct liner of sufficient thickness to comply with energy code and ASHRAE/IESNA 90.1.

3. Factory-insulated flexible ducts.

4. Factory-insulated plenums and casings.

5. Flexible connectors.

6. Vibration-control devices.

7. Factory-insulated access panels and doors.

3.9 INDOOR DUCT AND PLENUM INSULATION SCHEDULE

1. Inside building envelop in unconditioned space supply, return and relief air duct and plenum insulation shall be the following (Minimum R-6)

   a. Mineral-Fiber Blanket: 2 inches thick and R= 3.0 f.ft^2.F/Btu per inch thickness, K= 0.26 Btu.in /h.ft^2. 1.5-lb/ cu.ft. normal density.

END OF SECTION

SECTION 23 3113 – METAL DUCTS

PART 1 - GENERAL:

Contractor shall install ductwork as per drawing. Ductwork material shall galvanized sheet steel 20 gage thickness unless otherwise indicated. Ductwork shall be as per SMACNA requirements. Contractor shall provide 1” acoustic insulation inside and 2” thermal insulation outside as per drawings. All duct size dimensions in drawing shown is clear space. All connection between ducts, or ducts and equipment of dissimilar metals shall be furnished with a non-conductive gasket to prevent contact between dissimilar metals.

1.1 SUMMARY

A. Section includes

1. Rectangular ducts and fittings.
2. Round and flat-oval ducts and fittings
3. Sheet metal materials.
4. Duct liner.
5. Sealants and gaskets.
6. Hangers and supports.

1.2 REFERENCE STANDARDS

A. SMACNA

B. ASHRAE

C. NFPA

D. ASTM

E. International Mechanical Code

F. ACGIH - American Conference of Industrial Hygienists

1.3 QUALITY ASSURANCE

A. ASHRAE Compliance: Applicable requirements in ASHRAE 62.1-2004, Section 5 - "Systems and Equipment" and Section 7 - "Construction and System Start-Up."

B. ASHRAE/IESNA Compliance: Applicable requirements in ASHRAE/IESNA 90.1-2004.

C. NFPA 90A, “Standard for the Installation of Air Conditioning and Ventilating Systems,”

D. SMACNA - HVAC Duct Construction Standards, Latest Edition.

E. SMACNA – HVAC Air Duct Leakage Test Manual.

F. The contractor must comply with the specification in its entirety. If on inspections, changes have been made without prior approval, the contractor will make the applicable changes to comply with this specification, at the contractor’s expense.

G. At the discretion of the Engineer, sheet metal gauges, and reinforcing may be checked at various times to verify all duct construction is in compliance.

H. At the discretion of the Engineer, sheet metal gauges, and reinforcing may be checked at various times to verify all duct construction is in compliance. If on inspections,

changes have been made without prior approval, the contractor will make the applicable changes to comply with this specification, at the contractor's expense.

I. Duct sealants, liners, insulation, etc. shall have a UL label and shall have a Flame Spread rating not over 25 and a Smoke Developed rating no higher than 50, when in the final dry state.

J. The contractor must comply with the specification in its entirety. If on inspections, changes have been made without prior approval, the contractor will make the applicable changes to comply with this specification, at the contractor's expense.

1.4 SUBMITTALS

A. Mechanical Contractor shall submit all sheet metal ductwork shop drawings to the AC unit manufacturer prior to submission to the Engineer for review. AC unit manufacturer shall approve the air performance and acoustical performance of the AC units in the location and with the ductwork configuration and construction as shown on the shop drawings. AC unit manufacturer shall indicate approval directly on the ductwork shop drawing.

1.5 DEFINITIONS

A. Sealing Requirements Definitions: For the purposes of duct systems sealing requirements specified in this Section, the following definitions apply.

1. Seams: A seam is defined as jointing of two longitudinally (in the direction of airflow) oriented edges of duct surface material occurring between two joints. All other duct surface connections made on the perimeter are deemed to be joints.

2. Joints: Joints include girth joints, branch and subbranch intersections; so-called duct collar tap-ins; fitting subsections, louver and air terminal connection to ducts; access door and access panel frames and jambs; duct, plenum and casing abutments to building structures.

1.6 SYSTEM PERFORMANCE REQUIREMENTS

A. All ductwork indicated on the Drawings, specified or required for the air conditioning and ventilating systems shall be of materials as hereinafter specified unless indicated otherwise. All air distribution ductwork shall be fabricated, erected, supported, etc., in accordance with all applicable standards of SMACNA Duct Manuals where such standards do not conflict with NFPA 90A and where class of construction equals or exceeds that specified herein.

B. All ductwork shown on the Drawings, specified or required for the heating, ventilating and air conditioning systems shall be constructed and erected in a first class workmanlike manner. The work must be free of noise, chatter, whistling, vibration, and free from pulsation under all conditions of operation. After the system is in operation, should these defects occur, they shall be corrected as directed by the Engineer.

C. Except for special ducts specified elsewhere herein, all sheet metal used on the project shall be constructed from prime galvanized steel sheets and/or coils up to 60" in width. Each sheet shall be stenciled with manufacturer's name and gauge. Coils of sheet steel shall be stenciled throughout on ten foot (10') centers with manufacturer's name and must be visible after duct is installed. Sheet metal must conform to SMACNA sheet metal tolerances as outlined in SMACNA's "HVAC Duct Construction Standards."

D. Provide a duct system with minimum resistance to airflow. Take-offs shall be throated and transitions made as gradual as possible. 'Bullhead' or sharp take-offs are not

acceptable. Branch take-offs shall be 45 deg entry type. Straight tap or butt flanged connections are not acceptable. Clinch lock connections are preferred.

E. The duct system design, as indicated, has been used to select and size air moving and distribution equipment and other components of the air system. Changes or alterations to the layout of configuration of the duct system must be specifically approved in writing. Accompany requests for layout modifications with calculations showing that the proposal layout will provide the original design results without increasing the system total pressure.

F. Structural Performance: Duct hangers and supports, wind and seismic restraints shall withstand the effects of gravity, wind and seismic loads and stresses within limits and under conditions described in another section of this work.

G. Airstream Surfaces: Surfaces in contact with the airstream shall comply with requirements in ASHRAE 62.1-2004.

PART 2 - PRODUCTS

2.01 GENERAL

A. Duct dimensions indicated on drawings are clear, inside dimensions. The sheet metal dimensions shall be increased to accommodate internal liner where liner is required.

B. Drawings are diagrammatic and indicate the arrangement of the principal apparatus, ductwork and piping and shall be followed as closely as possible. All offsets, rises, drops, fittings and accessories are not indicated on drawings, but shall be provided as required to install system. Carefully investigate structure, finish conditions, and the work of other sections affecting sheet metal work, including work associated with testing, adjusting and balancing, in order to arrange all items accordingly. Provide best possible arrangement so as to provide maximum headroom and maintenance clearances.

C. In addition to sheet metal ductwork specified herein, furnish and install, or install as furnished by other sections, accessories and devices including, but not limited to, air distribution devices, smoke detectors, plenums, canopy hoods, and blank-off panels at unused louver areas.

D. Furnish and install intake and exhaust plenums attached to louvers.

E. Except as noted, all reinforcement shall be external.

2.02 DUCTWORK FABRICATION REQUIREMENTS

A. All Ductwork construction shall comply with both the “SMACNA HVAC Duct Construction Standards” and “SMACNA HVAC Air Duct Leakage Test Manual”, latest editions.

B. Joints, Seams and Connections: All longitudinal and transverse joints, seams and connections in metallic and no-metallic ducts shall be constructed as specified in “ SMACNA HVAC Duct Construction Standards - Metal and Flexible” and SMACNA HVAC Air Duct Leakage Test Manual”, and NAIMA Fibrous Glass Duct Construction Standards latest editions for static-pressure class, applicable sealing requirements, materials involved, reinforcement, duct-support intervals. All joints, longitudinal and transverse seams and connections in ductwork shall be securely fastened and sealed with welds, gaskets, mastics (adhesives), mastic-plus-embedded-fabric systems, liquid sealants or tapes. Closure systems used to seal ductwork listed and labeled in accordance with UL 181A shall be marked “181 A-P” for pressure-sensitive tape, “181 A-M” for mastic or 181

A-H" for heat-sensitive tape. Closure systems used to seal flexible air ducts and flexible air connectors shall comply with UL 181B and shall be marked "181 B-FX" for pressure-sensitive tape or "181 B-M" for mastic. Duct connections to flange of air distribution system equipment shall be sealed and mechanically fastened. Mechanical fasteners for use with flexible nonmetallic air ducts shall comply with UL 181B and shall be marked "181 B-C." Closure systems used to seal metal duct shall be installed in accordance with the manufacturer's installation instructions. Unlisted duct tape in not permitted as a sealant on any metal ducts.

C. Elbows, Transitions, Offsets, Branch Connections, and Other Duct Construction: Select types and fabricate according to SMACNA's "HVAC Duct Construction Standards - Metal and Flexible," Chapter 2, "Fittings and Other Construction," for static-pressure class, applicable sealing requirements, materials involved, duct-support intervals, and other provisions in SMACNA's "HVAC Duct Construction Standards - Metal and Flexible."

D. Duct systems shall be galvanized steel

E. The specifications refer to SMACNA standards, which shall be considered minimal. If local codes require standards other than described in SMACNA, local codes shall govern.

Duct System	SMACNA Table No.	SMACNA Pressure Classification	SMACNA Seal Classification
All return ducts and general exhaust ducts (toilets, MER Ventilation, non-lab exhaust, etc.)	2-4	-3" wg	B

2.03 RACTANGULAR DUCTS AND FITTINGS

A. Manufacturers: Subject to compliance with requirements, provide products by one of the following manufacturers:

1. Sheet Metal Connectors Inc.
2. DUCTMATE Industries Inc.
3. ZEN Industries Inc.
4. Ward Industries, Inc.; A division of Hart & Cooley, Inc.
5. Or approved equal

B. General Fabrication Requirements: Comply with SMACNA's "HVAC Duct Construction Standards - Metal and Flexible" based on indicated static-pressure class unless otherwise indicated.

C. Transverse Joints: Select joint types and fabricate according to SMACNA's "HVAC Duct Construction Standards - Metal and Flexible," Figure 2-1, "Rectangular Duct/Transverse Joints," for static-pressure class, applicable sealing requirements, materials involved, duct-support intervals, and other provisions in SMACNA's "HVAC Duct Construction Standards - Metal and Flexible."

D. Longitudinal Seams: Select seam types and fabricate according to SMACNA's "HVAC Duct Construction Standards - Metal and Flexible," Figure 2-2, "Rectangular

Duct/Longitudinal Seams," for static-pressure class, applicable sealing requirements, materials involved, duct-support intervals, and other provisions in SMACNA's "HVAC Duct Construction Standards - Metal and Flexible."

E. Elbows, Transitions, Offsets, Branch Connections, and Other Duct Construction: Select types and fabricate according to SMACNA's "HVAC Duct Construction Standards - Metal and Flexible," Chapter 4, "Fittings and Other Construction," for static-pressure class, applicable sealing requirements, materials involved, duct-support intervals, and other provisions in SMACNA's "HVAC Duct Construction Standards - Metal and Flexible."

2.04 ROUND AND FLAT-OVAL DUCTS AND FITTINGS

A. General Fabrication Requirements: Comply with SMACNA's "HVAC Duct Construction Standards - Metal and Flexible," Chapter 3, "Round, Oval, and Flexible Duct," based on indicated static-pressure class unless otherwise indicated. Retain manufacturer list to require factory-fabricated, single-wall round and flat-oval ducts and fittings; delete to allow shop-fabricated ducts and fittings.

1. Manufacturers: Subject to compliance with requirements, provide products by one of the following manufacturers

    a. Sheet Metal Connectors Inc.

    b. DUCTMATE Industries Inc.

    c. ZEN Industries Inc.

    d. Ward Industries, Inc.; A division of Hart & Cooley, Inc.

    e. Or approved equal

B. Flat-Oval Ducts: Indicated dimensions are the duct width (major dimension) and diameter of the round sides connecting the flat portions of the duct (minor dimension).

C. Transverse Joints: Select joint types and fabricate according to SMACNA's "HVAC Duct Construction Standards - Metal and Flexible," Figure 3-1, "Round Duct Transverse Joints," for static-pressure class, applicable sealing requirements, materials involved, duct-support intervals, and other provisions in SMACNA's "HVAC Duct Construction Standards - Metal and Flexible."

1. Transverse Joints in Ducts Larger Than 60 Inches in Diameter: Flanged.

D. Longitudinal Seams: Select seam types and fabricate according to SMACNA's "HVAC Duct Construction Standards - Metal and Flexible," Figure 3-2, "Round Duct Longitudinal Seams," for static-pressure class, applicable sealing requirements, materials involved, duct-support intervals, and other provisions in SMACNA's "HVAC Duct Construction Standards - Metal and Flexible."

1. Fabricate round ducts larger than 90 inches in diameter with butt-welded longitudinal seams.

2. Fabricate flat-oval ducts larger than 72 inches in width (major dimension) with butt-welded longitudinal seams.

E. Tees and Laterals: Select types and fabricate according to SMACNA's "HVAC Duct Construction Standards - Metal and Flexible," Figure 3-5, "90 Degree Tees and Laterals," and Figure 3-6, "Conical Tees," for static-pressure class, applicable sealing requirements, materials involved, duct-support intervals, and other provisions in SMACNA's "HVAC Duct Construction Standards - Metal and Flexible."

2.05 SHEET METAL MATERIALS

A. General Material Requirements: Comply with SMACNA's “HVAC Duct Construction Standards - Metal and Flexible” for acceptable materials, material thicknesses, and duct construction methods unless otherwise indicated. Sheet metal materials shall be free of pitting, seam marks, roller marks, stains, discolorations, and other imperfections.

B. Galvanized Sheet Steel: Comply with ASTM A 653/A 653M, A924.

1. Galvanized Coating Designation: G90.

2. Finishes for Surfaces Exposed to View: Mill phosphatized.

C. Factory- or Shop-Applied Antimicrobial Coating:

1. Apply to the surface of sheet metal that will form the interior surface of the duct. An untreated clear coating shall be applied to the exterior surface.

2. Antimicrobial compound shall be tested for efficacy by an NRTL and registered by the EPA for use in HVAC systems.

3. Coating containing the antimicrobial compound shall have a hardness of 2H, minimum, when tested according to ASTM D 3363.

4. Surface-Burning Characteristics: Maximum flame-spread index of 25 and maximum smoke-developed index of 50 when tested according to UL 723; certified by an NRTL.

5. Shop-Applied Coating Color: White.

6. Antimicrobial coating on sheet metal is not required for duct containing liner treated with antimicrobial coating.

D. Reinforcement Shapes and Plates: ASTM A 36/A 36M, steel plates, shapes, and bars; black and galvanized.

1. Where black- and galvanized-steel shapes and plates are used to reinforce aluminum ducts, isolate the different metals with butyl rubber, neoprene, or EPDM gasket materials.

E. Tie Rods: Galvanized steel, 1/4-inch (6-mm) minimum diameter for lengths 36 inches (900 mm) or less; 3/8-inch (10-mm) minimum diameter for lengths longer than 36 inches (900 mm).

2.06 FLEXIBLE CONNECTIONS - FANS

A. Manufacturers: Subject to compliance with requirements, provide products by one of the following manufacturers

a. Flex master

b. CertainTeed Corporation

c. Sheet Metal Connectors Inc.

d. DUCTMATE Industries Inc.

e. Price Industries

f. Johns Manville

g. Or approved equal

B. Where indicated, provide connections made with flexible material so as to prohibit the transfer of vibration from fans to ductwork connecting thereto, without air leakage. The material between the clamps shall have sufficient slack so as to prevent tearing due to fan movement

C. The flexible connections shall be a minimum of 12” long. Material shall be mechanically locked to the outside helix. Use of adhesives to lock fabric in place is not acceptable. The helix is constructed of a corrosive resistant galvanized steel, formed and mechanically locked to the ducts fabric on the outside to prevent tearing.

D. Flexible fabric ductwork shall be rated at 6” positive pressure and at 4” negative pressure.

E. Flexible metal duct shall be listed UL Class 1.

F. Flexible connections shall be fabricated from approved flame proofed fabric conforming to NFPA 90A. Asbestos cloth is not permitted.

G. Indoor installations shall be Neoprene or vinyl coated fabrics.

H. Outdoor installations shall use Hypalon coated fabric by Colmant Coated Fabric, Duct Mate Industries, Trelleborg Company or approved equal.

2.07 DUCT LINER

A. Fibrous-Glass Duct Liner: Comply with ASTM C 1071, NFPA 90A, or NFPA 90B; and with NAIMA AH124, "Fibrous Glass Duct Liner Standard."

1. Manufacturers: Subject to compliance with requirements, provide products by one of the following manufacturers

   a. CertainTeed Corporation

   b. Sheet Metal Connectors Inc.

   c. DUCTMATE Industries Inc.

   d. Price Industries

   e. Johns Manville

   f. Or approved equal

2. Maximum Thermal Conductivity:

   1) Type I, Flexible: 0.27 Btu x in./h x sq. ft. x deg F at 75 deg F mean temperature.

   2) Type II, Rigid: 0.23 Btu x in./h x sq. ft. x deg F at 75 deg F mean temperature.

3. Antimicrobial Erosion-Resistant Coating: Apply to the surface of the liner that will form the interior surface of the duct to act as a moisture repellent and erosion-resistant coating. Antimicrobial compound shall be tested for efficacy by an NRTL and registered by the EPA for use in HVAC systems.

4. Solvent or Water Based Liner Adhesive: Comply with NFPA 90A or NFPA 90B and with ASTM C 916.

B. Insulation Pins and Washers:

1. Cupped-Head, Capacitor-Discharge-Weld Pins: Copper- or zinc-coated steel pin, fully annealed for capacitor-discharge welding, 0.106-inch diameter shank, and

length to suit depth of insulation indicated with integral 1-1/2-inch galvanized carbon-steel washer.

2. Insulation-Retaining Washers: Self-locking washers formed from 0.016-inch thick stainless steel; with beveled edge sized as required to hold insulation securely in place but not less than 1-1/2 inches in diameter.

C. Shop Application of Duct Liner: Comply with SMACNA's "HVAC Duct Construction Standards - Metal and Flexible," Figure 7-11, "Flexible Duct Liner Installation."

1. Adhere a single layer of indicated thickness of duct liner with at least 90 percent adhesive coverage at liner contact surface area. Attaining indicated thickness with multiple layers of duct liner is prohibited.

2. Apply adhesive to transverse edges of liner facing upstream that do not receive metal nosing.

3. Butt transverse joints without gaps, and coat joint with adhesive.

4. Fold and compress liner in corners of rectangular ducts or cut and fit to ensure butted-edge overlapping.

5. Do not apply liner in rectangular ducts with longitudinal joints, except at corners of ducts, unless duct size and dimensions of standard liner make longitudinal joints necessary.

6. Apply adhesive coating on longitudinal seams in ducts with air velocity of 2500 fpm.

7. Secure liner with mechanical fasteners 4 inches from corners and at intervals not exceeding 12 inches transversely; at 3 inches from transverse joints and at intervals not exceeding 18 inches longitudinally.

8. Secure transversely oriented liner edges facing the airstream with metal nosings that have either channel or "Z" profiles or are integrally formed from duct wall. Fabricate edge facings at the following locations:

   a. Fan discharges.

   b. Intervals of lined duct preceding unlined duct.

   c. Upstream edges of transverse joints in ducts where air velocities are higher than 2500 fpm or where indicated.

9. Secure insulation between perforated sheet metal inner ducts of same thickness as specified for outer shell. Use mechanical fasteners that maintain inner duct at uniform distance from outer shell without compressing insulation.

   a. Sheet Metal Inner Duct Perforations: 3/32-inch diameter, with an overall open area of 23 percent.

10. Terminate inner ducts with buildouts attached to fire-damper sleeves, dampers, turning vane assemblies, or other devices. Fabricated buildouts (metal hat sections) or other buildout means are optional; when used, secure buildouts to duct walls with bolts, screws, rivets, or welds.

2.08 SEALANT AND GASKETS

A. General Sealant and Gasket Requirements: Surface-burning characteristics for sealants and gaskets shall be a maximum flame-spread index of 25 and a maximum smoke-developed index of 50 when tested according to UL 723; certified by an NRTL.

B. Two-Part Tape Sealing System:

1. Tape: Woven cotton fiber impregnated with mineral gypsum and modified acrylic/silicone activator to react exothermically with tape to form hard, durable, airtight seal.
2. Sealant: Modified styrene acrylic.
3. Water resistant.
4. Mold and mildew resistant.
5. Service: Indoor and outdoor.
6. Service Temperature: Minus 40 to plus 200 deg F (Minus 40 to plus 93 deg C).
7. Substrate: Compatible with galvanized sheet steel (both PVC coated and bare), stainless steel, or aluminum.
8. For indoor applications, use sealant that has a VOC content of 250 g/L or less when calculated according to 40 CFR 59, Subpart D (EPA Method 24).

C. Water-Based Joint and Seam Sealant:

1. Application Method: Brush on.
2. Solids Content: Minimum 65 percent.
3. Shore A Hardness: Minimum 20.
4. Water resistant.
5. Mold and mildew resistant.
6. VOC: Maximum 75 g/L (less water).
7. Maximum Static-Pressure Class: 10-inch w.g (2500 Pa), positive and negative.
8. Service: Indoor or outdoor.
9. Substrate: Compatible with galvanized sheet steel (both PVC coated and bare), stainless steel, or aluminum sheets.

D. Flanged Joint Sealant: Comply with ASTM C 920.

1. General: Single-component, acid-curing, silicone, elastomeric.
2. Type: S
3. Grade: NS
4. Class: 25
5. Use: O
6. For indoor applications, use sealant that has a VOC content of 250 g/L or less when calculated according to 40 CFR 59, Subpart D (EPA Method 24).

E. Flange Gaskets: Butyl rubber, neoprene, or EPDM polymer with polyisobutylene plasticizer.

F. Round Duct Joint O-Ring Seals:

1. Seal shall provide maximum leakage class of 3 cfm/100 sq. ft. at 1-inch w.g (0.14 L/s per sq. m at 250 Pa) and shall be rated for 10-inch w.g (2500-Pa) static-pressure class, positive or negative.

2. EPDM O-ring to seal in concave bead in coupling or fitting spigot.

3. Double-lipped, EPDM O-ring seal, mechanically fastened to factory-fabricated couplings and fitting spigots.

2.09 HANGERS AND SUPPORTS

A. Hanger Rods for Noncorrosive Environments: Cadmium-plated steel rods and nuts.

B. Hanger Rods for Corrosive Environments: Electro galvanized, all-thread rods or galvanized rods with threads painted with zinc-chromate primer after installation.

C. Strap and Rod Sizes: Comply with SMACNA's “HVAC Duct Construction Standards - Metal and Flexible,” “Rectangular Duct Hangers Minimum Size,” and “Minimum Hanger Sizes for Round Duct.”

D. Steel Cables for Galvanized-Steel Ducts: Galvanized steel complying with ASTM A 603.

E. Steel Cables for Stainless-Steel Ducts: Stainless steel complying with ASTM A 492.

F. Steel Cable End Connections: Cadmium-plated steel assemblies with brackets, swivel, and bolts designed for duct hanger service; with an automatic-locking and clamping device.

G. Duct Attachments: Sheet metal screws, blind rivets, or self-tapping metal screws; compatible with duct materials.

H. Trapeze and Riser Supports:

1. Supports for Galvanized-Steel Ducts: Galvanized-steel shapes and plates.

2. Supports for Stainless-Steel Ducts: Stainless-steel shapes and plates.

3. Supports for Aluminum Ducts: Aluminum or galvanized steel coated with zinc chromate.

PART 3 - EXECUTION

3.01 DUCT INSTALLATION

A. Drawing plans, schematics, and diagrams indicate general location and arrangement of duct system. Indicated duct locations, configurations, and arrangements were used to size ducts and calculate friction loss for air-handling equipment sizing and for other design considerations. Install duct systems as indicated unless deviations to layout are approved on Shop Drawings and Coordination Drawings.

B. All ductwork indicated on drawings is schematic. Therefore, changes in duct size and/or location shall be made where necessary to conform to space conditions, at no additional cost to the Engineer.

C. Install ducts according to SMACNA's “HVAC Duct Construction Standards - Metal and Flexible” unless otherwise indicated.

D. Provide necessary offsets, transitions and streamliners to avoid interference with the building construction, piping, or equipment. Locate ducts with sufficient space around equipment to allow normal operating and maintenance activities.

E. Provide fittings, branches, inlets and outlets in such a manner that air turbulence is reduced to a minimum.

F. Provide a duct system with minimum resistance to airflow. Take-offs shall be throated and transitions made as gradual as possible. ‘Bullhead’ or sharp take-offs are not acceptable. Branch take-offs shall be 45 deg entry type. Straight tap or butt flanged connections are not acceptable. Clinch lock connections are preferred.

G. Provide straight runs of ductwork at equipment, fans, coils, terminal boxes and humidifiers per manufacturer’s recommendations.

H. Provide flexible connector where ductwork connects to fans, air handling units and other rotating equipment and where indicated on drawings.

I. Furnish and install manual dampers, fire dampers, registers, grilles, register boxes, access doors, sound traps, etc., as described elsewhere in the specifications and as required for a complete system, ready for operation.

J. Where fire and smoke dampers, automatic dampers or combination fire/smoke dampers are shown on drawings or are required, their selection shall be made so that the dampers of all ratings and types shall be of the nominal 100% face area type, with blade package and frame components out of the airstream. These dampers shall include the required oversize enclosures that shall be sealed by the damper manufacturer for the appropriate duct pressure class into which they are installed. Such dampers shall have appropriate rectangular, flat oval or round duct collars to facilitate connection of mating ductwork. The Contractor shall be responsible for any additional sealing of duct collars and connections required to maintain the duct seal class requirements, but shall not jeopardize the UL breakaway connection.

K. All dampers are to be selected and installed with duct transitions so that the damper clear open area (including frames, stops, etc.), equals to or exceeds the connecting duct (inlet and outlet) clear open area (duct clear inside dimensions). The mechanical contractor shall provide the required duct transitions.

L. Install ducts with fewest possible joints.

M. Install factory- or shop-fabricated fittings for changes in direction, size, and shape and for branch connections.

N. Unless otherwise indicated, install ducts vertically and horizontally, and parallel and perpendicular to building lines.

O. Install ducts close to walls, overhead construction, columns, and other structural and permanent enclosure elements of building.

P. Install ducts with a minimum clearance of 1 inch plus allowance for insulation thickness.

Q. Route ducts to avoid passing through transformer vaults and electrical equipment rooms and enclosures.

R. Where ducts pass through non-fire-rated interior partitions and exterior walls and are exposed to view, cover the opening between the partition and duct or duct insulation with

sheet metal flanges of same metal thickness as the duct. Overlap openings on four sides by at least 1-1/2 inches (38 mm).

S. Protect duct interiors from moisture, construction debris and dust, and other foreign materials. Comply with SMACNA's “Duct Cleanliness for New Construction Guidelines.” Ductwork shall not be left exposed for more than 8 hours at a time.

T. Provide companion flange joints, fabricated in the sheet metal contractor’s shop, similar to SMACNA Type T-24a, T-25a or T-25b (Table 2-32, SMACNA, “HVAC DUCT CONSTRUCTION STANDARDS”). Joints shall be consistent with ductwork pressure class. PVC clips are not permitted (use metal) and all corners shall be bolted (boltless connectors are not permitted).

U. All ductwork unless otherwise noted shall be hung with 1 in. x 1/8 in. galvanized iron bands. Ductwork with cross sectional area under 4 square feet shall be hung on 8’-0 in. centers. For ducts with a cross-sectional area of more than 4 sq. ft. but not over 10 sq. ft. hangers shall be no more than 6 feet apart, and for ducts with a cross sectional area of more than 10 sq. ft. hangers shall be no more than 4 ft. apart. All hangers shall be bent (2” minimum) under the bottom as well as the sides and secured with sheet metal screws.

V. Where ducts are stacked they shall be independently supported as above or shall be supported on minimum 1 ¼” x 1 ¼” x 1/8” angle cradle hung by either 1 ¼” x 1 ¼” x 1/8” angles or 3/8” diameter threaded rod.

W. All ductwork shall be substantially built with approved joints and seams smooth on the inside and a neat finish on the outside. Duct joints as near air tight as possible, with laps made in the direction of air flow and no flanges projecting into the air stream. Ducts shall be adequately braced to prevent vibration. All angles shall be galvanized or shop painted with two coats or rust resistant paint.

3.02 INSTALLATION OF EXPOSED DUCTWORK

A. Protect ducts exposed in finished spaces from being dented, scratched, or damaged.

B. Trim duct sealants flush with metal. Create a smooth and uniform exposed bead. Do not use two-part tape sealing system.

C. Grind welds to provide smooth surface free of burrs, sharp edges, and weld splatter. When welding stainless steel with a No. 3 or 4 finish, grind the welds flush, polish the exposed welds, and treat the welds to remove discoloration caused by welding.

D. Maintain consistency, symmetry, and uniformity in the arrangement and fabrication of fittings, hangers and supports, duct accessories, and air outlets.

E. Repair or replace damaged sections and finished work that does not comply with these requirements.

3.03 DUCT SEALING

A. Seal ducts for duct static-pressure, seal classes, and leakage classes specified herein according to SMACNA's “HVAC Duct Construction Standards - Metal and Flexible.”

B. Sealant: Water based elastomeric compound, gun or brush grade, maximum 25 flame spread and 50 smoke developed (dry state) specifically for sealing ductwork. Use products as recommended by manufacturer for low, medium or high pressure systems.

1. Manufacturers: Subject to compliance with requirements, provide products by one of the following manufacturers
    a. Hardcast
    b. United McGill
    c. Polymer Adhesives
    d. Ductmate
    e. Or approved equal

C. Provide liquid sealant, with or without compatible tape, for low clearance slip joints and heavy, permanently elastic mastic type where clearances are larger. Oil base caulking and glazing compounds are not acceptable.

D. Tape: Use only tape specifically designated by the sealant manufacturer. SMACNA recommends that foil tape not be used and that pressure sensitive tape not be used on bare metal surface or on dry sealant.

E. Seal ducts at a minimum to the following seal classes according to SMACNA's "HVAC Duct Construction Standards - Metal and Flexible":
    1. Comply with SMACNA's "HVAC Duct Construction Standards - Metal and Flexible."
    2. Outdoor, Supply-Air Ducts: Seal Class A.
    3. Outdoor, Exhaust Ducts: Seal Class C.
    4. Outdoor, Return-Air Ducts: Seal Class C.
    5. Unconditioned Space, Supply-Air Ducts in Pressure Classes 2-Inch wg and Lower: Seal Class B.
    6. Unconditioned Space, Supply-Air Ducts in Pressure Classes Higher Than 2-Inch wg: Seal Class A.
    7. Unconditioned Space, Exhaust Ducts: Seal Class C.
    8. Unconditioned Space, Return-Air Ducts: Seal Class B.
    9. Conditioned Space, Supply-Air Ducts in Pressure Classes 2-Inch wg and Lower: Seal Class C.
    10. Conditioned Space, Supply-Air Ducts in Pressure Classes Higher Than 2-Inch wg: Seal Class B.
    11. Conditioned Space, Exhaust Ducts: Seal Class B.
    12. Conditioned Space, Return-Air Ducts: Seal Class C.

3.04 HANGER AND SUPPORT INSTALLATION

A. Comply with SMACNA's “HVAC Duct Construction Standards - Metal and Flexible,” Chapter 4, “Hangers and Supports.”

B. Ducts shall be supported with approved hangers at intervals not exceeding 10 feet or other approved duct support systems designed in accordance with the New York City Building Code. Flexible and other factory-made ducts shall be supported in accordance with the manufacturer’s installation instruction. Ducts shall not be hung from or supported by suspended ceilings.

C. Fasteners appropriate for construction materials to which hangers are being attached.

1. Where practical, install concrete inserts before placing concrete.

2. Install powder-actuated concrete fasteners after concrete is placed and completely cured.

3. Do not use powder-actuated concrete fasteners for seismic restraints.

D. Hanger Spacing: Comply with SMACNA's “HVAC Duct Construction Standards - Metal and Flexible,” Table 4-1 (Table 4-1M), “Rectangular Duct Hangers Minimum Size,” and Table 4-2,

E. Hangers Exposed to View: Threaded rod and angle or channel supports.

F. Support vertical ducts with steel angles or channel secured to the sides of the duct with welds, bolts, sheet metal screws, or blind rivets; support at each floor and at a maximum intervals of 16 feet (5 m).

G. Install upper attachments to structures. Select and size upper attachments with pull-out, tension, and shear capacities appropriate for supported loads and building materials where used.

3.05 SEISMIC-RESTRAINT-DEVICE INSTALLATION

A. Install ducts with hangers and braces designed to support the duct and to restrain against seismic forces required by applicable building codes. Comply with SMACNA's "Seismic Restraint Manual: Guidelines for Mechanical Systems." and ASCE/SEI 7.

1. Space lateral supports a maximum of 40 feet o.c., and longitudinal supports a maximum of 80 feet o.c.

2. Brace a change of direction longer than 12 feet.

B. Select seismic-restraint devices with capacities adequate to carry present and future static and seismic loads.

C. Install cables so they do not bend across edges of adjacent equipment or building structure.

D. Install cable restraints on ducts that are suspended with vibration isolators.

E. Install seismic-restraint devices using methods approved by an evaluation service member of the ICC Evaluation Service

F. Attachment to Structure: If specific attachment is not indicated, anchor bracing and restraints to structure, to flanges of beams, to upper truss chords of bar joists, or to concrete members.

G. Drilling for and Setting Anchors:

1. Identify position of reinforcing steel and other embedded items prior to drilling holes for anchors. Do not damage existing reinforcement or embedded items during drilling. Notify the Engineer if reinforcing steel or other embedded items are encountered during drilling. Locate and avoid prestressed tendons, electrical and telecommunications conduit, and gas lines.

2. Do not drill holes in concrete or masonry until concrete, mortar, or grout has achieved full design strength.

3. Wedge Anchors: Protect threads from damage during anchor installation. Heavy-duty sleeve anchors shall be installed with sleeve fully engaged in the structural element to which anchor is to be fastened.

4. Set anchors to manufacturer's recommended torque, using a torque wrench.

5. Install zinc-coated steel anchors for interior applications and stainless-steel anchors for applications exposed to weather.

3.06 CONNECTIONS

A. Make connections to equipment with flexible connectors complying with these specifications.

B. Comply with SMACNA's “HVAC Duct Construction Standards - Metal and Flexible” for branch, outlet and inlet, and terminal unit connections.

3.07 PAINTING

A. Paint interior of metal ducts that are visible through registers and grilles and that do not have duct liner. Apply one coat of flat, black, latex paint over a compatible galvanized-steel primer. Paint materials and application requirements are specified in Section ‘Painting and Finishing’.

3.08 FIELD QUALITY CONTROL

A. Perform tests and inspections.

3.09 LEAKAGE, TESTING, AIR DISTRIBUTION SYSTEMS

A. Each air distribution system shall be tested for leakage before insulation is applied.

B. Testing will be done under another section of this work. Refer to section TESTING, ADJUSTING AND BALANCING for additional requirements.

C. This contractor is responsible to provide all necessary personnel to assist in the testing as well as make all provisions for the installation and removal of testing equipment, probes, sensors, etc.

D. Disassemble, reassemble, and seal segments of systems to accommodate leakage testing and for compliance with test requirements.

E. Give (7) seven days’ advance notice for testing.

3.10 DUCT SYSTEM CLEANLINESS TESTS

A. Visually inspect duct system to ensure that no visible contaminants are present

B. Test sections of metal duct system, chosen randomly by the Engineer, for cleanliness according to “Vacuum Test” in NADCA ACR, “Assessment, Cleaning and Restoration of HVAC Systems.”

1. Acceptable Cleanliness Level: Net weight of debris collected on the filter media shall not exceed 0.75 mg/100 sq. cm.

C. Duct system will be considered defective if it does not pass tests and inspections.

D. Prepare test and inspection reports.

3.11 START UP

A. Air Balance: Comply with requirements in Section 230593 “Testing, Adjusting, and Balancing for HVAC.”

END OF SECTION

SECTION 23 3300 – AIR DUCT ACCESSORIES

PART 1 - GENERAL

1.1 SUMMARY

A. Section Includes:

1. Backdraft and pressure relief dampers.
2. Manual volume dampers.
3. Control dampers.
4. Fire dampers.
5. Turning vanes.
6. Duct-mounted access doors.
7. Flexible connectors.
8. Duct accessory hardware.

1.2 REFERENCE STANDARDS

A. SMACNA

B. ASHRAE

C. NFPA

D. ASTM

E. International Mechanical Code

F. New York City Construction Code

G. ACGIH - American Conference of Industrial Hygienists

1.3 QUALITY ASSURANCE

A. In accordance with AWS qualification tests for welding processes involved. Certify that their qualification is current.

B. NFPA Compliance: Comply with the following NFPA Standards:

1. NFPA 90A, “Standard for the Installation of Air Conditioning and Ventilating Systems,”except as indicated otherwise.

C. SMACNA - HVAC Duct Construction Standards, Latest Edition.

D. SMACNA – HVAC Air Duct Leakage Test Manual.

E. The contractor must comply with the specification in its entirety. If on inspections, changes have been made without prior approval, the contractor will make the applicable changes to comply with this specification, at the contractor’s expense.

F. At the discretion of the City, sheet metal gauges, and reinforcing may be checked at various times to verify all duct construction is in compliance.

1.4 SUBMITTALS

A. Shop Drawings: For duct accessories. Include plans, elevations, sections, details and attachments to other work.

1. Detail duct accessories fabrication and installation in ducts and other construction. Include dimensions, weights, loads, and required clearances; and method of field assembly into duct systems and other construction. Include the following:

a. Special fittings.

b. Manual volume damper installations.

c. Control-damper installations.

d. Fire-damper, smoke-damper, combination fire- and smoke-damper, ceiling, and corridor damper installations, including sleeves; and duct-mounted access doors and remote damper operators.

e. Wiring Diagrams: For power, signal, and control wiring.

B. Coordination Drawings: Reflected ceiling plans, drawn to scale, on which ceiling-mounted access panels and access doors required for access to duct accessories are shown and coordinated with each other, using input from Installers of the items involved.

C. Operation and Maintenance Data: For air duct accessories to include in operation and maintenance manuals.

D. Furnish extra materials that match products installed and that are packaged with protective covering for storage and identified with labels describing contents.

1. Fusible Links: Furnish quantity equal to 100 percent of amount installed

1.5 DEFINITIONS

A. Sealing Requirements Definitions: For the purposes of duct systems sealing requirements specified in this Section, the following definitions apply.

1. Seams: A seam is defined as jointing of two longitudinally (in the direction of airflow) oriented edges of duct surface material occurring between two joints. All other duct surface connections made on the perimeter are deemed to be joints.

2. Joints: Joints include girth joints, branch and subbranch intersections; so-called duct collar tap-ins; fitting subsections, louver and air terminal connection to ducts; access door and access panel frames and jambs; duct, plenum and casing abutments to building structures.

1.6 SYSTEM PERFORMANCE REQUIREMENTS

A. All ductwork indicated on the Drawings, specified or required for the air conditioning and ventilating systems shall be of materials as hereinafter specified unless indicated otherwise. All air distribution ductwork shall be fabricated, erected, supported, etc., in accordance with all applicable standards of SMACNA Duct Manuals where such standards do not conflict with NFPA 90A and where class of construction equals or exceeds that specified herein.

B. All ductwork shown on the Drawings, specified or required for the heating, ventilating and air conditioning systems shall be constructed and erected in a first class workmanlike manner. The work must be free of noise, chatter, whistling, vibration, and free from

pulsation under all conditions of operation. After the system is in operation, should these defects occur, they shall be corrected as directed by the Engineer.

C. Except for special ducts specified elsewhere herein, all sheet metal used on the project shall be constructed from prime galvanized steel sheets and/or coils up to 60" in width. Each sheet shall be stenciled with manufacturer's name and gauge. Coils of sheet steel shall be stenciled throughout on ten foot (10') centers with manufacturer's name and must be visible after duct is installed. Sheet metal must conform to SMACNA sheet metal tolerances as outlined in SMACNA's "HVAC Duct Construction Standards."

D. Provide a duct system with minimum resistance to airflow. Take-offs shall be throated and transitions made as gradual as possible. 'Bullhead' or sharp take-offs are not acceptable. Branch take-offs shall be 45 deg entry type. Straight tap or butt flanged connections are not acceptable. Clinch lock connections are preferred.

E. The duct system design, as indicated, has been used to select and size air moving and distribution equipment and other components of the air system. Changes or alterations to the layout of configuration of the duct system must be specifically approved in writing. Accompany requests for layout modifications with calculations showing that the proposal layout will provide the original design results without increasing the system total pressure.

F. Structural Performance: Duct hangers and supports, wind and seismic restraints shall withstand the effects of gravity, wind and seismic loads and stresses within limits and under conditions described in another section of this work.

G. Airstream Surfaces: Surfaces in contact with the airstream shall comply with requirements in ASHRAE 62.1-2004.

1.7 QUALITY ASSURANCE

A. ASHRAE Compliance: Applicable requirements in ASHRAE 62.1-2004, Section 5 - "Systems and Equipment" and Section 7 - "Construction and System Start-Up."

B. ASHRAE/IESNA Compliance: Applicable requirements in ASHRAE/IESNA 90.1-2004.

C. NFPA 90A, "Standard for the Installation of Air Conditioning and Ventilating Systems,"

D. SMACNA – HVAC Duct Construction Standards, Latest Edition.

E. SMACNA – "Guidelines for Welding Sheet Metal."

F. The contractor must comply with the specification in its entirety.

G. At the discretion of the Engineer, sheet metal gauges, and reinforcing may be checked at various times to verify all duct construction is in compliance. If on inspections, changes have been made without prior approval, the contractor will make the applicable changes to comply with this specification, at the contractor's expense.

H. Duct sealants, liners, insulation, etc. shall have a UL label and shall have a Flame Spread rating not over 25 and a Smoke Developed rating no higher than 50, when in the final dry state.

PART 2 - PRODUCTS

2.1 ASSEMBLY DESCRIPTION

A. Comply with NFPA 90A, "Installation of Air Conditioning and Ventilating Systems," and with NFPA 90B, "Installation of Warm Air Heating and Air Conditioning Systems."

B. Comply with SMACNA's "HVAC Duct Construction Standards - Metal and Flexible" for acceptable materials, material thicknesses, and duct construction methods unless otherwise indicated. Sheet metal materials shall be free of pitting, seam marks, roller marks, stains, discolorations, and other imperfections.

2.2 MATERIALS

A. Galvanized Sheet Steel: Comply with ASTM A 653

1. Galvanized Coating Designation: G90
2. Exposed-Surface Finish: Mill phosphatized.

B. Reinforcement Shapes and Plates: Galvanized-steel reinforcement where installed on galvanized sheet metal ducts; compatible materials for aluminum and stainless-steel ducts.

C. Tie Rods: Stainless steel, 1/4-inch minimum diameter for lengths 36 inches or less; 3/8-inch minimum diameter for lengths longer than 36 inches.

2.3 BACKDRAFT AND PRESSURE RELIEF DAMPERS

A. Manufacturers: Subject to compliance with requirements, provide products by one of the following manufacturers:

1. GREENHECK
2. RUSKIN
3. CARNES
4. Tuttle and Baily
5. Or approved equal

B. Description: Gravity balanced.

C. Maximum Air Velocity: 2000 fpm

D. Maximum System Pressure: 2-inch wg.

E. Frame: Hat-shaped, 0.063-inch-thick extruded aluminum or 0.052-inch- thick stainless steel, with welded corners and mounting flange.

F. Blade Action: Parallel.

G. Blade Seals: Neoprene, mechanically locked.

H. Blade Axles:

1. Material: Aluminum.
2. Diameter: 0.20 inch

I. Tie Bars and Brackets: Aluminum

J. Return Spring: Adjustable tension.

K. Bearings: Steel ball or synthetic pivot bushings.

L. Accessories:

1. Adjustment device to permit setting for varying differential static pressure.
2. Counterweights and spring-assist kits for vertical airflow installations.

3. Electric actuators.
4. Chain pulls.
5. Screen Mounting: Front mounted in sleeve.
    a. Sleeve Thickness: 20 gage minimum.
    b. Sleeve Length: 6 inches minimum.
6. Screen Mounting: Rear mounted.
7. Screen Material: Aluminum.
8. Screen Type: Bird
9. 90-degree stops.

2.4 MANUAL VOLUME DAMPER

A. Manufacturers: Subject to compliance with requirements, provide products by one of the following manufacturers:
    1. GREENHECK
    2. RUSKIN
    3. CARNES
    4. Tuttle and Baily
    5. Or approved equal

B. Standard, Aluminum, Manual Volume Dampers:
    1. Standard leakage rating, with linkage outside airstream.
    2. Suitable for horizontal or vertical applications.
    3. Frames: Hat-shaped, 0.10-inch- thick, aluminum sheet channels; frames with flanges for attaching to walls and flangeless frames for installing in ducts.
    4. Blades:
        a. Multiple or single blade.
        b. Parallel- or opposed-blade design.
        c. Stiffen damper blades for stability.
        d. Roll-Formed Aluminum Blades: 0.10-inch- thick aluminum sheet.
        e. Extruded-Aluminum Blades: 0.050-inch- thick extruded aluminum.
    5. Blade Axles: Stainless steel
    6. Bearings:
        a. Oil-impregnated bronze or Molded synthetic or Stainless-steel sleeve.
        b. Dampers in ducts with pressure classes of 3-inch wg or less shall have axle's full length of damper blades and bearings at both ends of operating shaft.
    7. Tie Bars and Brackets: Aluminum.

C. Jackshaft:
    1. Size: 1-inch diameter.

2. Material: Galvanized-steel pipe rotating within pipe-bearing assembly mounted on supports at each mullion and at each end of multiple-damper assemblies.

3. Length and Number of Mountings: As required to connect linkage of each damper in multiple-damper assembly.

D. Damper Hardware:

1. Zinc-plated, die-cast core with dial and handle made of 3/32-inch- thick zinc-plated steel, and a 3/4-inch hexagon locking nut.

2. Include center hole to suit damper operating-rod size.

3. Include elevated platform for insulated duct mounting.

2.5 CONTROL DAMPERS

A. Manufacturers: Subject to compliance with requirements, provide products by one of the following manufacturers:

1. GREENHECK

2. RUSKIN

3. CARNES

4. Or approved equal

B. Low-leakage rating, with linkage outside airstream, and bearing AMCA's Certified Ratings Seal for both air performance and air leakage.

C. Frames:

1. U shaped.

2. 0.064-inch thick stainless steel.

3. Mitered and welded corners.

D. Blades:

1. Multiple blade with maximum blade width of 8 inches.

2. Parallel- and opposed blade design.

3. Stainless steel.

4. 0.064 inch thick single skin

5. Blade Edging: Closed-cell neoprene

6. Blade Edging: Inflatable seal blade edging, or replaceable rubber seals.

E. Blade Axles: 1/2-inch diameter; stainless steel; blade-linkage hardware of zinc-plated steel and brass; ends sealed against blade bearings.

1. Operating Temperature Range: From minus 40 to plus 200 deg F.

F. Bearings:

1. Stainless-steel sleeve.

2. Dampers in ducts with pressure classes of 3-inch wg. or less shall have axles full length of damper blades and bearings at both ends of operating shaft.

3. Thrust bearings at each end of every blade.

2.6 FIRE DAMPERS

A. Manufacturers: Subject to compliance with requirements, provide products by one of the following manufacturers:

1. GREENHECK
2. RUSKIN
3. CARNES
4. Arlan Damper Corp.
5. Nailor Industries Inc.
6. Air Balance Inc.
7. Or approved equal

B. Type: Static and dynamic rated and labeled according to UL 555 by an NRTL.

C. Closing rating in ducts up to 4-inch wg static pressure class and minimum 4000-fpm velocity.

D. Fire Rating: 3 hours.

E. Frame: Curtain type with blades outside airstream except when located behind grille where blades may be inside airstream]; fabricated with roll-formed, 0.034-inch- thick galvanized steel; with mitered and interlocking corners.

F. Mounting Sleeve: Factory- or field-installed, galvanized sheet steel.

1. Minimum Thickness: 0.138 inch thick, as indicated, and of length to suit application.
2. Exception: Omit sleeve where damper-frame width permits direct attachment of perimeter mounting angles on each side of wall or floor; thickness of damper frame must comply with sleeve requirements.

G. Mounting Orientation: Vertical or horizontal as indicated.

H. Blades: Roll-formed, interlocking, 0.034-inch- thick, galvanized sheet steel. In place of interlocking blades, use full-length, 0.034-inch-thick, galvanized-steel blade connectors.

I. Horizontal Dampers: Include blade lock and stainless-steel closure spring.

J. Heat-Responsive Device: Replaceable, 165 deg F rated, fusible links.

K. Heat-Responsive Device: Electric, resettable link and switch package, factory installed, 165 deg F rated.

2.7 FLANGE CONNECTORS

A. Manufacturers: Subject to compliance with requirements, provide products by one of the following manufacturers:

1. Sheet Metal Connectors Inc.
2. DUCTMATE Industries Inc.
3. ZEN Industries Inc.
4. Ward Industries, Inc.; A division of Hart & Cooley, Inc.
5. Or approved equal

B. Description: Roll-formed, factory-fabricated, slide-on transverse flange connectors, gaskets, and components.

C. Material: Galvanized steel.

D. Gage and Shape: Match connecting ductwork.

2.8 TURNING VANES

A. Manufacturers: Subject to compliance with requirements, provide products by one of the following manufacturers:

1. Sheet Metal Connectors Inc.
2. DUCTMATE Industries Inc.
3. ZEN Industries Inc.
4. METALAIRE, Inc.
5. SEMCO Incorporated
6. Ward Industries, Inc.; A division of Hart & Cooley, Inc.
7. Or approved equal

B. Manufactured Turning Vanes for Metal Ducts: Curved blades of galvanized sheet steel; support with bars perpendicular to blades set; set into vane runners suitable for duct mounting.

1. Acoustic Turning Vanes: Fabricate airfoil-shaped aluminum extrusions with perforated faces and fibrous-glass fill.

C. Manufactured Turning Vanes for Nonmetal Ducts: Fabricate curved blades of resin-bonded fiberglass with acrylic polymer coating; support with bars perpendicular to blades set; set into vane runners suitable for duct mounting.

D. General Requirements: Comply with SMACNA's "HVAC Duct Construction Standards - Metal and Flexible"; Figures 4-3, "Vanes and Vane Runners," and 4-4, "Vane Support in Elbows."

E. Vane Construction: Single wall.

F. Vane Construction: Single wall for ducts up to 48 inches wide and double wall for larger dimensions.

2.9 DUCT-MOUNTED ACCESS DOORS

A. Manufacturers: Subject to compliance with requirements, provide products by one of the following manufacturers:

1. GREENHECK
2. RUSKIN
3. Nailor Industries Inc.
4. DUCTMATE Industries Inc.
5. Or approved equal

B. Duct-Mounted Access Doors: Fabricate access panels according to SMACNA's "HVAC Duct Construction Standards - Metal and Flexible"; Figures 7-2 , "Duct Access Doors and Panels," and 7-3, "Access Doors - Round Duct."

1. Door:
    a. Double wall, rectangular.
    b. Galvanized sheet metal with insulation fill and thickness as indicated for duct pressure class.
    c. Vision panel.
    d. Hinges and Latches: 1-by-1-inch butt or piano hinge and cam latches.
    e. Fabricate doors airtight and suitable for duct pressure class.
2. Frame: Galvanized sheet steel, with bend-over tabs and foam gaskets.
3. Number of Hinges and Locks:
    a. Access Doors Less Than 12 Inches Square: No hinges and two sash locks.
    b. Access Doors up to 18 Inches Square: Two hinges and two sash locks.
    c. Access Doors up to 24 by 48 Inches: Continuous and two compression latches with outside and inside handles.
    d. Access Doors Larger than 24 by 48 Inches: Continuous and two compression latches with outside and inside handles.

C. Pressure Relief Access Door:
1. Door and Frame Material: Galvanized sheet steel.
2. Door: Single wall with metal thickness applicable for duct pressure class.
3. Operation: Open outward for positive-pressure ducts and inward for negative-pressure ducts.
4. Factory set at 10-inch wg
5. Doors close when pressures are within set-point range.
6. Hinge: Continuous piano.
7. Latches: Cam.
8. Seal: Neoprene or foam rubber.
9. Insulation Fill: 1-inch thick, fibrous-glass or polystyrene-foam board.

2.10 DUCT ACCESS PANEL ASSEMBLIES

A. Manufacturers: Subject to compliance with requirements, provide products by one of the following manufacturers
1. Ductmate Industries Inc.
2. Flame Gard, Inc.
3. 3M
4. Or approved equal

B. Labeled according to UL 1978 by an NRTL.

C. Panel and Frame: Minimum thickness 0.0428-inch stainless steel.

D. Fasteners: Stainless steel. Panel fasteners shall not penetrate duct wall.

E. Gasket: Comply with NFPA 96; grease-tight, high-temperature ceramic fiber, rated for minimum 2000 deg F.

F. Minimum Pressure Rating: 10-inch wg , positive or negative.

2.11 FLEXIBLE CONNECTORS

A. Manufacturers: Subject to compliance with requirements, provide products by one of the following manufacturers

1. DUCTMATE Industries Inc.
2. Duro Dyne, Inc.
3. Thermaflex.
4. Or approved equal

B. Materials: Flame-retardant or noncombustible fabrics.

C. Coatings and Adhesives: Comply with UL 181, Class 1.

D. Metal-Edged Connectors: Factory fabricated with a fabric strip 3-1/2 inches wide attached to two strips of 2-3/4-inch- wide, 0.028-inch- thick, galvanized sheet steel or 0.032-inch- thick aluminum sheets. Provide metal compatible with connected ducts.

E. Indoor System, Flexible Connector Fabric: Glass fabric double coated with neoprene.

1. Minimum Weight: 26 oz./sq. yd. .
2. Tensile Strength: 480 lbf/inch in the warp and 360 lbf/inch in the filling.
3. Service Temperature: Minus 40 to plus 200 deg F .

F. Outdoor System, Flexible Connector Fabric: Glass fabric double coated with weatherproof, synthetic rubber resistant to UV rays and ozone.

1. Minimum Weight: 24 oz./sq. yd. .
2. Tensile Strength: 530 lbf/inch in the warp and 440 lbf/inch in the filling.
3. Service Temperature: Minus 50 to plus 250 deg F.

G. High-Temperature System, Flexible Connectors: Glass fabric coated with silicone rubber.

1. Minimum Weight: 16 oz./sq. yd..
2. Tensile Strength: 285 lbf/inch in the warp and 185 lbf/inch in the filling.
3. Service Temperature: Minus 67 to plus 500 deg F.

H. High-Corrosive-Environment System, Flexible Connectors: Glass fabric with chemical-resistant coating.

1. Minimum Weight: 14 oz./sq. yd. .
2. Tensile Strength: 450 lbf/inch in the warp and 340 lb./inch in the filling.
3. Service Temperature: Minus 67 to plus 500 deg F.

I. Thrust Limits: Combination coil spring and elastomeric insert with spring and insert in compression, and with a load stop. Include rod and angle-iron brackets for attaching to fan discharge and duct.

1. Frame: Steel, fabricated for connection to threaded rods and to allow for a maximum of 30 degrees of angular rod misalignment without binding or reducing isolation efficiency.
2. Outdoor Spring Diameter: Not less than 80 percent of the compressed height of the spring at rated load.
3. Minimum Additional Travel: 50 percent of the required deflection at rated load.
4. Lateral Stiffness: More than 80 percent of rated vertical stiffness.
5. Overload Capacity: Support 200 percent of rated load, fully compressed, without deformation or failure.
6. Elastomeric Element: Molded, oil-resistant rubber or neoprene.
7. Coil Spring: Factory set and field adjustable for a maximum of 1/4-inch movement at start and stop.

2.12 DUCT ACCESSORY HARDWARE

A. Instrument Test Holes: Cast iron or cast aluminum to suit duct material, including screw cap and gasket. Size to allow insertion of pitot tube and other testing instruments and of length to suit duct-insulation thickness.

B. Adhesives: High strength, quick setting, neoprene based, waterproof, and resistant to gasoline and grease.

PART 3 - EXECUTION

3.1 INSTALLATION

A. Install duct accessories according to applicable details in SMACNA's "HVAC Duct Construction Standards - Metal and Flexible" for metal ducts and in NAIMA AH116, "Fibrous Glass Duct Construction Standards," for fibrous-glass ducts.

B. Install duct accessories of materials suited to duct materials; use galvanized-steel accessories in galvanized-steel and fibrous-glass ducts, stainless-steel accessories in stainless-steel ducts, and aluminum accessories in aluminum ducts.

C. Compliance with ASHRAE/IESNA 90.1-2004 includes Section 6.4.3.3.3 - "Shutoff Damper Controls," restricts the use of backdraft dampers, and requires control dampers for certain applications. Install backdraft and control dampers at inlet of exhaust fans or exhaust ducts as close as possible to exhaust fan unless otherwise indicated.

D. Install volume dampers at points on supply, return, and exhaust systems where branches extend from larger ducts. Where dampers are installed in ducts having duct liner, install dampers with hat channels of same depth as liner, and terminate liner with nosing at hat channel.

1. Install steel volume dampers in steel ducts.
2. Install aluminum volume dampers in aluminum ducts.

E. Set dampers to fully open position before testing, adjusting, and balancing.

F. Install test holes at fan inlets and outlets and elsewhere as indicated.

G. Install fire and smoke dampers according to UL listing.

H. Connect ducts to duct silencers with flexible duct connectors or rigidly.

I. Install duct access doors on sides of ducts to allow for inspecting, adjusting, and maintaining accessories and equipment at the following locations:

1. On both sides of duct coils.
2. Upstream and downstream from duct filters.
3. At outdoor-air intakes and mixed-air plenums.
4. At drain pans and seals.
5. Downstream from manual volume dampers, control dampers, backdraft dampers, and equipment.
6. Adjacent to and close enough to fire or smoke dampers, to reset or reinstall fusible links. Access doors for access to fire or smoke dampers having fusible links shall be pressure relief access doors and shall be outward operation for access doors installed upstream from dampers and inward operation for access doors installed downstream from dampers.
7. At each change in direction and at maximum 50-foot spacing.
8. Upstream and downstream from turning vanes.
9. Upstream or downstream from duct silencers.
10. Control devices requiring inspection.
11. Elsewhere as indicated.

J. Install access doors with swing against duct static pressure.

K. Access Door Sizes:

1. One-Hand or Inspection Access: 8 by 5 inches.
2. Two-Hand Access: 12 by 6 inches.
3. Head and Hand Access: 18 by 10 inches.
4. Head and Shoulders Access: 21 by 14 inches.
5. Body Access: 25 by 14 inches.
6. Body plus Ladder Access: 25 by 17 inches.

L. Label access doors according to Section 230553 "Identification for HVAC Piping and Equipment" to indicate the purpose of access door.

M. Install flexible connectors to connect ducts to equipment.

N. For fans developing static pressures of 5-inch wg and more, cover flexible connectors with loaded vinyl sheet held in place with metal straps.

O. Connect terminal units to supply ducts directly or with maximum 12-inch lengths of flexible duct. Do not use flexible ducts to change directions.

P. Connect diffusers or light troffer boots to ducts directly or with maximum 60-inch lengths of flexible duct clamped or strapped in place.

Q. Connect flexible ducts to metal ducts with adhesive plus sheet metal screws.

R. Install duct test holes where required for testing and balancing purposes.

S. Install thrust limits at centerline of thrust, symmetrical on both sides of equipment. Attach thrust limits at centerline of thrust and adjust to a maximum of 1/4-inch movement during start and stop of fans.

3.2 FIELD QUALITY CONTROL

A. Tests and Inspections:

1. Operate dampers to verify full range of movement.
2. Inspect locations of access doors and verify that purpose of access door can be performed.
3. Operate fire dampers to verify full range of movement and verify that proper heat-response device is installed.
4. Inspect turning vanes for proper and secure installation.
5. Operate remote damper operators to verify full range of movement of operator and damper.

END OF SECTION

SECTION 23 3423 – HVAC POWER VENTILATORS

PART 1 - GENERAL

1.1 SUMMARY

A. Section Includes:

1. Ceiling-mounted ventilators.
2. Centrifugal ventilators - roof downblast.
3. Centrifugal ventilators - roof upblast.
4. Sidewall propeller fans.

1.2 ACTION SUBMITTALS

A. Product Data: For each type of product.

1. Construction details, material descriptions, dimensions of individual components and profiles, and finishes for fans.
2. Rated capacities, operating characteristics, and furnished specialties and accessories.
3. Certified fan performance curves with system operating conditions indicated.
4. Certified fan sound-power ratings.
5. Motor ratings and electrical characteristics, plus motor and electrical accessories.
6. Material thickness and finishes, including color charts.
7. Dampers, including housings, linkages, and operators.
8. Prefabricated roof curbs.
9. Fan speed controllers.

B. Shop Drawings:

1. Include plans, elevations, sections, and attachment details.
2. Include details of equipment assemblies. Indicate dimensions, weights, loads, required clearances, method of field assembly, components, and location and size of each field connection.
3. Include diagrams for power, signal, and control wiring.

C. Engineering Services: Calculate requirements for selecting vibration isolators and seismic restraints. Provide calculations to verify materials provided meet specified performance requirements. Calculations shall bear the seal of a Professional Engineer registered in the State of New York.

1.3 INFORMATIONAL SUBMITTALS

A. Coordination Drawings: Floor plans, reflected ceiling plans, and other details, or BIM model, drawn to scale, showing the items described in this Section and coordinated with all building trades.

B. Seismic Qualification Data: For fans, accessories, and components, from manufacturer.

1. Basis for Certification: Indicate whether withstand certification is based on actual test of assembled components or on calculation.
2. Dimensioned Outline Drawings of Equipment Unit: Identify center of gravity and locate and describe mounting and anchorage provisions.
3. Detailed description of equipment anchorage devices on which the certification is based and their installation requirements.

C. Field quality-control reports.

1.4 CLOSEOUT SUBMITTALS

A. Operation and Maintenance Data: For HVAC power ventilators to include in normal and emergency operation, and maintenance manuals.

1.5 MAINTENANCE MATERIAL SUBMITTALS

A. Furnish extra materials that match products installed and that are packaged with protective covering for storage and identified with labels describing contents.

1. Belts: One set(s) for each belt-driven unit.

PART 2 - PRODUCTS

2.1 DOME TYPE POWER ROOF VENTILATORS

A. Housing: Weatherproof heavy gage spun aluminum construction with large rolled bead for strength, galvanized base, and rigid galvanized steel internal supports

1. Housing does not provide any internal structural support.
2. Equipped with oversized electrical conduit chase thru curb cap and into motor compartment.
3. Pre-wired to junction box mounted in motor compartment
4. Equipped with electrical disconnect switch.

B. Fan Assembly:

1. Centrifugal Fan Wheel: Statically and dynamically balanced backward inclined type constructed of aluminum, spark resistant, non overloading, and matched with deeply spun venturis.
2. Direct Drive Motor: Continuous duty, permanently lubricated, multi-speed, with thermal overload protection, and mounted out of the main airstream.
3. Belt Drive Motor: Continuous duty, ball bearing design, permanently lubricated, and mounted out of the main air stream.
    a. Shafts: Steel, turned, ground, polished, and rust protected.
    b. Ball Bearings: Heavy duty type rated for minimum L50 life exceeding 200,000 hours.
    c. Pulleys: Adjustable, cast iron, machined and keyed, and sized for 150 percent of horsepower at its rated maximum speed.

C. Disconnect Switch: UL approved for the use, non-fused safety type disconnect switch, located under the fan housing. Factory installed wiring run in flexible metal

conduit.

D. Dampers:

1. Types:

a. Automatic self-opening back draft type, with spring actuated return.

b. Low Leakage motorized type.

2. Frame: Steel.

3. Blades: Aluminum.

4. Bearings: Bronze or nylon.

5. Blade Edge Seals: Vinyl.

6. Jamb Seals: Flexible metal compression type.

E. Insect/Bird Screen: Aluminum.

2.2 UPBLAST TYPE POWER ROOF VENTILATORS

A. Housing: Weatherproof heavy gage spun aluminum construction with large rolled bead for strength, galvanized base, and rigid galvanized steel internal supports

1. Housing does not provide any internal structural support.

2. Equipped with oversized electrical conduit chase thru curb cap and into motor compartment.

3. Pre-wired to junction box mounted in motor compartment

4. Equipped with electrical disconnect switch.

5. Belt Drive Units: Large diameter cooling tube provides ambient air to flow over motor.

B. Fan Assembly:

1. Centrifugal Fan Wheel: Statically and dynamically balanced backward inclined type constructed of aluminum, spark resistant, non overloading, and matched with deeply spun venturis.

2. Belt Drive Motor: Continuous duty, ball bearing design, permanently lubricated, and mounted out of the main air stream.

a. Shafts: Steel, turned, ground, polished, and rust protected.

b. Ball Bearings: Heavy duty type rated for minimum L50 life exceeding 200,000 hours.

c. Pulleys: Adjustable, cast iron, machined and keyed, and sized for 150 percent of horsepower at its rated maximum speed.

C. Kitchen Exhaust Fans:

` 1. Conforming to NFPA 96 Standard for Ventilation Control and Fire Protection of Commercial Cooking Operations.

a. Fans UL 762 listed for 400 degrees F.

b. Factory rewired weather proof junction box mounted to exterior of fan housing complete with disconnect switch.

c. Grease Collector/Separator Box: Directs grease from single swiveling collection spout to durable galvanized steel box, trapping grease and residue, and avoiding discharge onto roof surface, and separates water from the grease which prolongs the time required between periodic maintenance.

D. Disconnect Switch: UL approved for the use, non-fused safety type disconnect switch, located under the fan housing. Factory installed wiring run in flexible metal conduit.

E. Dampers:

1. Types:

a. Low Leakage motorized type.

2. Frame: Steel.

3. Blades: Aluminum.

4. Bearings: Bronze or nylon.

5. Blade Edge Seals: Vinyl.

6. Jamb Seals: Flexible metal compression type.

F. Insect/Bird Screen: Aluminum.

2.3 ROOF CURBS

A. Type: Factory fabricated, braced and stiffened to form a rigid weatherproof unit.

1. Construction:

a. Single wall welded construction.

2. Materials:

a. Minimum No. 18 gage galvanized steel.

2. Insulation: Rigid fiberglass, minimum 1-1/2 inch thick.

3. Provide vented roof curbs for kitchen exhaust applications.

B. Extended Bases: Same construction as roof curb.

1. Provide hinged cap if access is required.

2. Provide vented extended bases for kitchen applications.

2.4 DIRECT DRIVE SIDEWALL MOUNTED PROPELLER FANS

A. General Description:

1. Fan arrangement shall be either supply or exhaust, see Fan Schedule

2. Sidewall mounted applications

3. Performance capabilities up to 7,100 cubic feet per minute (cfm) and static pressure to 0.625 inches of water gauge

4. Fans are available in eight sizes with nominal wheel diameters ranging from 8 inches through 24 inches (8 - 24 unit sizes)

5. Maximum continuous operating temperature 130 Fahrenheit (54.4 Celsius)

6. Each fan shall bear a permanently affixed manufacture's engraved metal nameplate containing the model number and individual serial number

B. Wheel:
   1. Propeller shall be aluminum blade riveted to steel hub
   2. A standard square key and set screw or tapered bushing shall lock the propeller to the motor shaft
   3. Statically and dynamically balanced in accordance with AMCA Standard 204-05
   4. The propeller and fan inlet will be matched and shall have precise running tolerances for maximum performance and operating efficiency

C. Motors:
   1. Motor enclosures: Totally enclosed fan cooled.
   2. Motors are permanently lubricated, sleeve bearing type on sizes 8-12 and ball bearing type on sizes 14-24 to match with the fan load and furnished at the specific voltage and phase
   3. Accessible for maintenance

D. Drive Frame:
   1. Drive frame assemblies and fan panels shall be galvanized steel
   2. Drive frame shall have welded wire or formed channels and fan panels shall have prepunched mounting holes, formed flanges and a deep formed one piece inlet venturi

E. Disconnect Switches:
   1. NEMA rated: 12
   2. Positive electrical shut-off
   3. Wired from fan motor to junction box

F. Options/Accessories:
   1. Dampers:
      a. Type: Gravity
      b. Prevents outside air from entering back into the building when fan is off
      c. Balanced for minimal resistance to flow
      d. Galvanized frames with prepunched mounting holes
   2. Dampers Guards:
      a. Guard material: Galvanized
      b. Shall completely enclose the damper or wall opening on the discharge side of the fan
   3. Discharge Diffusers:
      a. Constructed of heavy gauge galvanized steel frame and blades
      b. Shall have prepunched mounting flanges

c. Designed to mount to the interior end of the wall housing when used in the supply configuration

4. Finishes:
   a. Types: Epoxy
5. Horizontal Mounting:
   a. Allows fan to be mounted in a horizontal configuration
6. Wall Housing:
   a. Mounting arrangement: Flush Interior
   b. Constructed of galvanized steel with heavy gauge mounting flanges and prepunched mounting holes
   c. Housing shall include OSHA approved motor guard
   d. Reduces installation time and provides maximum installation flexibility
7. Wall Collar:
   a. Constructed of galvanized steel with heavy gauge mounting flanges and prepunched mounting holes
   b. Guard type: OSHA Guard
   c. Protective guard completely enclose the motor and drive side of the fan
   d. Coated with Permatector, a thermal setting polyester urethane

PART 3 - EXECUTION

3.1 INSTALLATION OF HVAC POWER VENTILATORS

A. Install roof curbs in complete accordance with the manufacturer’s printed installation instructions and approved shop drawings (if any).

B. Install power roof ventilators on roof curbs, with approved fastening devices, in accordance with manufacturer’s printed installation instructions.

C. Adjust damper linkages for proper damper operation. Install units with clearances for service and maintenance.

D. Label units according to requirements specified in Section 230553 "Identification for HVAC Piping and Equipment."

3.2 DUCTWORK CONNECTIONS

A. Drawings indicate general arrangement of ducts and duct accessories. Make final duct connections with flexible connectors. Flexible connectors are specified in Section 233300 "Air Duct Accessories."

3.3 ELECTRICAL CONNECTIONS

A. Connect wiring according to Section 260519 "Low-Voltage Electrical Power Conductors and Cables."

B. Ground equipment according to Section 260526 "Grounding and Bonding for Electrical Systems."

C. Install electrical devices furnished by manufacturer, but not factory mounted, according to NFPA 70 and NECA 1.

1. Nameplate shall be laminated acrylic or melamine plastic signs, as specified in Section 260553 "Identification for Electrical Systems."

2. Nameplate shall be laminated acrylic or melamine plastic signs with a black background and engraved white letters at least 1/2 inch (13 mm) high.

3.4 CONTROL CONNECTIONS

A. Install control and electrical power wiring to field-mounted control devices.

B. Connect control wiring according to Section 260523 "Control-Voltage Electrical Power Cables."

3.5 FIELD QUALITY CONTROL

A. Manufacturer's Field Service: Engage a factory-authorized service representative to test and inspect components, assemblies, and equipment installations, including connections.

B. Perform tests and inspections with the assistance of a factory-authorized service representative.

C. Tests and Inspections:

1. Verify that shipping, blocking, and bracing are removed.

2. Verify that unit is secure on mountings and supporting devices and that connections to ducts and electrical components are complete. Verify that proper thermal-overload protection is installed in motors, starters, and disconnect switches.

3. Verify that there is adequate maintenance and access space.

4. Verify that cleaning and adjusting are complete.

5. Disconnect fan drive from motor, verify proper motor rotation direction, and verify fan wheel free rotation and smooth bearing operation. Reconnect fan drive system, align and adjust belts, and install belt guards.

6. Adjust belt tension.

7. Adjust damper linkages for proper damper operation.

8. Verify lubrication for bearings and other moving parts.

9. Verify that manual and automatic volume control and fire and smoke dampers in connected ductwork systems are in fully open position.

10. Disable automatic temperature-control operators, energize motor and adjust fan to indicated rpm, and measure and record motor voltage and amperage.

11. Shut unit down and reconnect automatic temperature-control operators.

12. Remove and replace malfunctioning units and retest as specified above.

D. Test and adjust controls and safeties. Controls and equipment will be considered defective if they do not pass tests and inspections.

E. Prepare test and inspection reports.

3.6 ADJUSTING

A. Adjust damper linkages for proper damper operation.

B. Adjust belt tension.

C. Comply with requirements in Section 230593 "Testing, Adjusting, and Balancing for HVAC" for testing, adjusting, and balancing procedures.

D. Replace fan and motor pulleys as required to achieve design airflow.

E. Lubricate bearings.

3.7 DEMONSTRATION

A. Engage a factory-authorized service representative to train Agency's maintenance personnel to adjust, operate, and maintain centrifugal fans.

END OF SECTION

SECTION 23 3713 – DIFFUSERS, REGISTERS AND GRILLES

PART 1 - GENERAL

1.1 SUMMARY

A. This section includes the following:

1. Grilles and Registers

1.2 REFERENCE STANDARDS

A. All air distribution equipment shall be designed, manufactured and tested in accordance with the latest applicable industry standards including the following:

1. SMACNA – Sheet Metal and Air Conditioning National Association.
2. ASHRAE - Test and rate air devices in accordance with ASHRAE Standard 70-2006.
3. ARI – Test and rate air devices in accordance with ARI Standards.
4. ADC Seal – Provide devices bearing ADC Certified Rating Seal.
5. AMCA Compliance: Test and rate air devices in accordance with AMCA Standards and shall bear AMCA Certified Seal.
6. NFPA Compliance: Install air devices in accordance with NFPA90A “Standard for the Installation of Air Conditioning and Ventilating Systems.”

B. All equipment and material to be furnished and installed as part of this work shall be UL or ETL listed, in accordance with the requirements of the authorities having jurisdiction and suitable or its intended use.

1.3 SUBMITTALS

A. Product Data: For each type of product indicated, include the following:

1. Data Sheet: Indicate materials of construction, finish, and mounting details; and performance data including throw and drop, static-pressure drop, and noise ratings.
2. Diffuser, Register, and Grille Schedule: Indicate drawing designation, room location, quantity, model number, size, and accessories furnished.

B. Manufacturer shall submit engineering data in a manner to facilitate convenient review of the following factors:

1. Throw, terminal velocity, noise criteria (NC), sound power, static pressure and total pressure of each type and size of air outlet.
2. Supply air units shall distribute the specified quantity of air evenly throughout the occupied zone uniformly, draftlessly and noiselessly. Sound levels shall not exceed ratings as required in the "Acoustical Treatment" section of these specifications.

C. The manufacturer shall provide published performance data for the diffusers, registers and grilles. They shall be tested in accordance with ANSI/ASHRAE Standard 70-2006.

D. Samples for Initial Selection: For diffusers, registers, and grilles with factory-applied color finishes.

E. Samples for Verification: For diffusers, registers, and grilles, in manufacturer's standard sizes to verify color selected.

F. Coordination Drawings: Reflected ceiling plans, drawn to scale, on which the following items are shown and coordinated with each other, using input from Installers of the items involved:

1. Ceiling suspension assembly members.
2. Method of attaching hangers to building structure.
3. Size and location of initial access modules for acoustical tile.
4. Ceiling-mounted items including lighting fixtures, diffusers, grilles, speakers, sprinklers, access panels, and special moldings.
5. Duct access panels.

G. Source quality-control reports.

1.4 PRODUCT DELIVERY, STORAGE AND HANDLING

A. Deliver air distribution devices wrapped in factory-fabricated fiber-board type containers. Identify on outside of container type of device and location to be installed. Avoid crushing or bending and prevent dirt and debris from entering and settling in devices.

B. Store air outlets and inlets in original cartons and protect from weather and construction work traffic. Where possible, store indoors, when necessary to store outdoors, store above grade and enclose with waterproof wrapping.

PART 2 - PRODUCTS

2.1 DIFFUSERS, REGISTERS AND GRILLES - GENERAL

A. Contractor shall furnish and install where shown on the drawings all air devices, diffusers, grilles and registers of the sizes, types and capacities indicated and as required for proper distribution of conditioned air within the conditioned spaces and for return of conditioned air from the conditioned spaces to the various air conditioning systems. Exhaust grilles and registers shall also be provided where indicated on the drawings and as required for the proper flow of exhaust air.

B. Devices shall be aluminum or steel, as specified by the Engineer and shall be factory finished with baked enamel finish or extruded aluminum finish of color selected by architect.

C. Air inlets and outlets shall be tested in accordance with ASHRAE 70.

D. Throw, horizontal distance from the diffuser to the point where the theoretical centerline velocity is 50 feet per minute, shall not exceed the horizontal distance between the diffuser and the nearest wall, or half the horizontal distance between ceiling diffusers.

E. Equipment manufacturer must submit engineering data in a manner to facilitate convenient review of the following factors: aspiration ability, including temperature and velocity transverse, throw and drop of each unit, noise criteria ratings for each unit, sizes, free area and quality of construction.

F. Supply air units shall distribute the specified quantity of air evenly throughout the occupied zone uniformly, draftlessly and noiselessly. Sound levels shall not exceed ratings as required in the "Acoustical Treatment" section of these specifications.

G. For devices installed in plaster construction, supply plaster frames as required for setting. All design and margin construction shall be coordinated with architectural requirements. Plaster frames where required shall be constructed of same material and finish as air terminal.

H. The air outlet manufacturer shall review architectural plans and shall be responsible for furnishing all air outlets with mounting frames and margins that are fully compatible with ceiling construction.

I. All ceiling diffusers shall be furnished and installed with an equalizing deflector and volume damper. If diffuser is to be used for return air, omit equalizing deflector. Supply diffusers shall be designed to protect ceilings from streaking and smudging. Blank-off or sectorizing baffles shall be furnished as indicated.

J. Coordinate duct connections with coordination drawings.

2.2 MANUFACTURERS:

A. Manufacturers: Subject to compliance with requirements, provide products by one of the following:

1. Titus
2. Greenheck
3. Anemostat
4. Pric
5. CARNES
6. Or approved equal.

2.3 DIFFUSER

A. Supply Diffuser(SD)

1. Supply Diffuser shall be Louvered Core- Lattice Face TITUS Model SG-TDC, Truaire, Continental Industries or approved equal
2. Face plate: 12-gauge stainless steel with 13/16” square holes and 3/16” fret bars
3. Louvered diffuser with border type 1 (surface mount) with 4 way blow pattern.
4. Construction material: stainless steel with 1-1/4” wide border on all sides.
5. Corners shall be welded with full penetration resistance welds.
6. 1-1/2” x 1-1/2” x 3/16” rear angle frame with 1/34” x 20 NC weld nuts

B. Supply Diffuser (CRD)

1. Supply Diffuser shall be TITUS Model TMS-FR, Truaire, Continental Industries or approved equal
2. Border Type 3 (Lay-In) With Fire Damper and Full Face.
3. Volume Adjustment damper control
4. Ceiling Module 12x12 with round neck 6

2.4 REGISTERS

A. Return Air Register (RR)

1. Return air register shall be TITUS Model 350ZRL. Truaire, Continental Industries or approved equal.
2. The fixed deflection blades shall be parallel to the long dimension of the register.
3. Construction material: Extruded aluminum with 1-1/4” wide border on all sides.
4. Corners shall be welded with full penetration resistance welds.
5. Deflection blades shall be contoured to a specifically designed and tested cross section to meet test performance data.
6. Opposed blade damper shall be constructed of heavy gauge steel or aluminum. Damper must be operable from face of the register.

2.5 SOURCE QUALITY CONTROL

A. Verification of Performance: Rate diffusers, registers, and grilles according to ASHRAE 70, "Method of Testing for Rating the Performance of Air Outlets and Inlets."

PART 3 - EXECUTION

3.1 EXAMINATION

A. Examine areas where diffusers, registers, and grilles are to be installed for compliance with requirements for installation tolerances and other conditions affecting performance of equipment.

B. Proceed with installation only after unsatisfactory conditions have been corrected.

C. The air outlet manufacturer shall review architectural plans and shall be responsible for furnishing all air outlets with mounting frames and margins that are fully compatible with ceiling construction.

3.2 INSTALLATION

A. Install diffusers, registers, and grilles level and plumb.

B. Ceiling-Mounted Outlets and Inlets: Drawings indicate general arrangement of ducts, fittings, and accessories. Air outlet and inlet locations have been indicated to achieve design requirements for air volume, noise criteria, airflow pattern, throw, and pressure drop. Make final locations where indicated, as much as practical. For units installed in lay-in ceiling panels, locate units in the center of panel. Where architectural features or other items conflict with installation, notify Agency for a determination of final location.

C. Install diffusers, registers, and grilles with airtight connections to ducts and to allow service and maintenance of dampers, air extractors, and fire dampers.

3.3 ADJUSTING

A. After installation, adjust diffusers, registers, and grilles to air patterns indicated, or as directed, before starting air balancing.

END OF SECTION

SECTION 232000 – HVAC PIPING

PART 1 GENERAL

1.01 RELATED WORK SPECIFIED ELSEWHERE

A. Through Penetration Firestops: Section 078400.

B. Sealants: Section 079200.

1.02 SUBMITTALS

A. Product Data:

1. Catalog sheets and specifications indicating manufacturer name, type, applicable reference standard, schedule, or class for specified pipe and fittings.

2. Material Schedule: Itemize pipe and fitting materials for each specified application in Pipe and Fittings Schedule in Part 3 of this Section. Where optional materials are specified indicate option selected.

B. Quality Control Submittals:

1. Installers Qualification Data:

a. Brazer Qualification Data for Refrigerant Piping: State refrigerant piping brazing experience; include names, home addresses and social security numbers of brazers.

2. Manufacturer's Data: Copy of mill certificates, laboratory test and manufacturing reports relating to chemical and physical properties of pipe, fittings, and related materials.

3. Contract Closeout Submittals:

a. Copy of Final Testing Record Log.

1.03 QUALITY ASSURANCE

A. Qualifications of Brazers: Comply with the following:

1. Certification of brazing operators by recognized authorities which require a qualification test.

2. Refrigerant Piping: The persons performing the brazing and their Supervisors shall be personally experienced in refrigerant piping brazing procedures.

1.05 DELIVERY, STORAGE, AND HANDLING

A. Pipe Storage:

1. Upon the receipt of each shipment of pipe on the job, maintain the pipe marking, and store pipe in accordance with ASTM material specifications, and method of manufacture (seamless, etc.) of each length of pipe.

2. Pipe markings shall be clearly readable at the time of pipe installation.

3. If at the time of its installation, any length of pipe not readily identifiable will be subject to rejection, or arbitrary downgrading by the Engineer to the lowest grade which has been received on the job to that date.

4. Provide factory-applied plastic end-caps on each length of pipe and tube, except for concrete, corrugated metal, bell and-spigot, and clay pipe.

a. Maintain end-caps through shipping, storage and handling to prevent pipe-end damage and prevent entrance of dirt, debris, and moisture.

PART 2 PRODUCTS

2.01 COPPER AND BRASS PIPE, TUBING AND FITTINGS

A. Copper Tube, Types K, L and M: ASTM B 88.

B. ACR Tube: ASTM B 280.

C. Wrot Copper Tube Fittings, Solder Joint: ASME B16.22.

D. Cast Copper Alloy Tube Fittings, Solder Joint: ASME B16.18.

E. Flared Tube Fittings:

1. Water Tube Type: ASME B16.26.

2. Automotive Tube Type: SAE J512.

3. Refrigerant Tube Type: SAE J513.

2.02 JOINING AND SEALANT MATERIALS

A. Thread Sealant:

1. LA-CO Industries', Slic-Tite Paste with Teflon.

2. Loctite Corp.'s No. 565 Thread Sealant.

3. Thread sealants for potable water shall be NSF approved.

B. Solder: Solid wire type (for refrigerant piping) conforming to the following:

1. Type 2: Lead-free tin-silver solder (ASTM B 32 Alloy Grade Sn 96); All-State Welding Products Inc.'s 430, Engelhard Corp.'s Silvabrite, or J.W. Harris Co. Inc.'s Stay-Brite.

2. Type 3: Lead-free tin-silver solder (ASTM B 32 Alloy Grade E, AC, or HB); Engelhard Corp.'s Silvabrite 100, Federated Fry Metals' Aqua Clean, or J.W. Harris Co. Inc.'s Stay-Safe Bridgit.

C. Brazing Alloys (for refrigerant piping):

1. Type 1: AWS A5.8, Class BCup-5, for brazing copper to brass, bronze, or copper; Engelhard's Silvaloy 15, J.W. Harris Co. Inc.'s Stay-Silv 15, and Handy & Harman's Sil-Fos.

2. Type 2: AWS A5.8, Class BAg-7, for brazing copper to steel or stainless steel; Engelhard's Silvaloy-56T, J.W. Harris Co. Inc.'s Safety-Silv 56, and Handy & Harman's Braze 560.

D. Brazing Flux: AWS Type FB3A; Handy & Harman's Handy Flux or J.W. Harris Co. Inc.'s Stay-Silv.

2.03 PACKING MATERIALS FOR BUILDING CONSTRUCTION PENETRATIONS

A. Oiled Oakum: Manufactured by Nupak of New Orleans, Inc., 931 Daniel St., Kenner, LA 70062, (504)466-1484.

2.04 DIELECTRIC CONNECTORS

A. Dielectric Fitting: Bronze ball valve with end connections and pressure rating to match associated piping.

1. Nipples with inert non-corrosive thermoplastic linings are not acceptable.

2.05 PIPE SLEEVES

A. Type A: Schedule 40 steel pipe.

B. Type B: No. 16 gage galvanized sheet steel.

C. Type C: Schedule 40 steel pipe with 1/4 inch steel collar continuously welded to pipe sleeve. Size steel collars as required to span a minimum of one cell or corrugation, on all sides of the rough opening thru the metal deck.

D. Type D: No. 16 gage galvanized sheet steel with 16 gage sheet steel metal collar rigidly secured to sleeve. Size metal collars as required to span a minimum of one cell or corrugation, on all sides of the rough opening thru the metal deck.

2.06 FLOOR, WALL AND CEILING PLATES

A. Cast Brass: Solid type with polished chrome plated finish, and set screw.

1. Series Z89 by Zurn, 929 Riverside Drive, Grosvenordale, CT 06255, (800) 243-1830.

2. Model FCP by Viking, 5150 Beltway Dr. SE, Caledonia, Michigan 49316 (800) 968-9501.

3. Or approved equal.

PART 3 EXECUTION

3.01 INSTALLATION - GENERAL

A. Install piping at approximate locations indicated, and at maximum height.

B. Install piping clear of door swings, and above sash heads.

C. Make allowances for expansion and contraction.

D. Allow for a minimum of one inch free air space around pipe or pipe covering, unless otherwise specified.

E. Install vertical piping plumb.

F. Use fittings for offsets and direction changes, except for Type K soft annealed copper tube.

G. Cut pipe and tubing ends square; ream before joining.

H. Threading: Use American Standard Taper Pipe Thread Dies.

1. Thread brass pipe with special threading dies.

I. Make final connections to equipment with unions, flanges, or mechanical type joint couplings.

3.02 PIPE JOINT MAKE-UP

A. Threaded Joint: Make up joint with a pipe thread compound applied in accordance with the manufacturer's printed application instructions for the intended service.

B. Soldered Joint: Thoroughly clean tube end and inside of fitting with emery cloth, sand cloth, or wire brush. Apply flux to the pre-cleaned surfaces. Install fitting, heat to soldering temperature, and join the metals with type solder specified. Remove residue.

C. Brazed Joint: Thoroughly clean tube end and inside of fitting with emery cloth, sand cloth, or wire brush. Apply flux to the pre-cleaned surfaces. Install fitting, heat to brazing temperature, and join the metals with brazing alloy. Remove residue.

D. Refrigerant Pipe Joint:

1. Hard Drawn Tubing, Brazed Joint: Make up joint with appropriate type of brazing alloy. Sweep piping interior with dry nitrogen at a rate of 1 to 3 cfm during brazing operation.

2. Hard Drawn Tubing, Soldered Joint: Solder joints with Type 2 solder at valves, controls, and other locations where brazing temperatures could cause damage.

E. Dissimilar Pipe Joint:

1. Joining Bell and Spigot and Threaded Pipe: Install a half coupling on the pipe or tube end to form a spigot, and caulk into the cast iron bell.

2. Joining Dissimilar Threaded Piping: Make up connection with a threaded coupling or with companion flanges.

3. Joining Dissimilar Non-Threaded Piping: Make up connection with adapters recommended by the manufacturers of the piping to be joined.

4. Joining Galvanized Steel Pipe and Brass Pipe or Copper Tubing: Make up joint with a dielectric connector.

5. Joining FRP and Threaded Pipe: Make up connection with adapters as recommended by manufacturers of piping being joined.

3.03 PIPING PENETRATIONS

A. Sleeve Schedule: Unless otherwise shown, comply with the following schedule for the type of sleeve to be used where piping penetrates wall, floor, or roof construction:

	CONSTRUCTION	SLEEVE TYPE
1.	Frame construction.	None Required
2.	Foundation walls.	A*
3.	Non-waterproof interior walls.	B*
4.	Non-waterproof interior floors on metal decks.	D*
5.	Non-waterproof interior floors not on metal decks.	B*
6.	Floors not on grade having a floor drain.	A
7.	Floors over mechanical equipment, steam service, machine, and boiler rooms.	A
8.	Floors finished or to be finished with latex composition or terrazzo, and on metal decks.	D*
9.	Floors finished or to be finished with latex composition or terrazzo, and not on metal decks.	A
10.	Earth supported concrete floors.	None Required
11.	Exterior concrete slabs on grade.	A
12.	Fixtures with floor outlet waste piping.	None Required
13.	Metal roof decks.	C
14.	Non-metal roof decks.	A

*Core drilling is permissible in lieu of sleeves where marked with asterisks.

B. Diameter of Sleeves and Core Drilled Holes:

1. Unless otherwise specified, size holes thru floors and walls in accordance with the through penetration fire stopping system being used.

C. Length of Sleeves (except as shown otherwise on Drawings):

1. Walls and Partitions: Equal in length to total finished thickness of wall or partition.

2. Floors, Finished: Equal in length to total finished thickness of floor and extending 1/2 inch above the finished floor level, except as follows:

a. In furred spaces at exterior walls, extend sleeve one inch above the finished floor level.

3. Roofs: Equal in length to the total thickness of roof construction, including insulation and roofing materials, and extending one inch above the finished roof level.

3.04 FLOOR, WALL AND CEILING PLATES

A. Install plates for exposed uninsulated piping passing thru floors, walls, ceilings, and exterior concrete slabs as follows:

1. In Finished Spaces:

a. Piping 4 Inch Size and Smaller: Solid or split, chrome plated cast brass.

2. Unfinished Spaces (Including Exterior Concrete Slabs): Solid, unplated cast iron.

3. Fasten plates with set screws.

4. Plates are not required in pipe shafts or furred spaces.

3.05 PIPE AND FITTING SCHEDULE

A. Where options are given, choose only one option for each piping service. No deviations from selected option will be allowed.

B. Schedule of Pipe and Fittings for the different piping services is as follows:

1. Refrigerants (RS, RL, HG & RD) 350 psig and less:

a. All Sizes: Type ACR hard drawn copper tubing with wrot copper fittings, and brazing alloy, unless otherwise specified.

2. Drain Piping:

a. Condensate Drain Piping: Type M hard drawn copper tubing with wrot copper or cast copper alloy solder fittings, and Type 3 solder.

END OF SECTION

SECTION 23 55 13 – FURNACES

PART 1 GENERAL

1.01 SUBMITTALS

A. Product Data: Catalog sheets, performance charts, specifications and installation instructions for each type of furnace.

B. Contract Closeout Submittals

1. Operation and Maintenance Data; Deliver 2 copies of the O&M datafor the installed products to the Engineer.

1.02 QUALITY ASSURANCE

A. Regulatory Requirements:

1. Furnace shall be UL listed and labeled.

2. Install in accordance with NFPA 54 National Fuel Gas Code.

3. Install in accordance with NFPA 31 installation of oil burning equipment.

PART 2 PRODUCTS

2.01 FURNACES, GENERAL

A. Fuel: Design furnace - burner units for firing with Commercial No. 2 fuel oil (CS 12-48).

B. Fuel: Design furnace - burner units for firing with natural gas, rated at 120,000 Btu.

C. Furnace - Burner - Control Unit: Each furnace shall be a complete factory assembled and packaged unit , consisting of a heat exchanger, fuel burning equipment, blower section, filter section, operating controls, safety controls and wiring. The unit shall be complete with a factory fabricated, reinforced, insulated, sheet steel jacket, with a corrosion resistant baked enamel finish. Access doors, or easily removable panels, shall be provided for servicing of all internal components and changing of filters.

D. Blower Unit: Quiet operating, heavy duty centrifugal type installed on a single heavy duty shaft, mounted on self-aligning ball or lifetime lubricated bearings, Vee belt driven by an electric motor. Isolate motor from steel frame with resilient mountings.

E. Filter Section: 1 inch thick throw-away type filters installed in a built-in filter rack. Provide sufficient area so that the air velocity through filters does not exceed 300 fpm.

2.02 GAS FIRED FURNACES

A. Heat Exchanger: All welded construction, multiple flue gas pass type, fabricated of heavy gage black sheet steel.

B. Gas Burners: Atmospheric type, slotted or drilled cast iron burners, or

stainless steel ribbon type.

C. Gas Burner Controls: Combination main gas control valve and pressure regulator and safety pilot. Draft diverter shall be of the built-in type or furnished for installing on top of unit.

D. Operating Controls: Factory wired and mounted on unit. Controls shall include fan and limit control with built-in summer switch, and an automatic thermostatic temperature regulator.

PART 3 EXECUTION

3.01 INSTALLATION

A. Install furnace of type and capacity as noted on the drawings. Provide sufficient room for cleaning and servicing all components.

B. Install thermostat at location indicated on drawings.

3.02 FUEL FOR START-UP AND TESTING

A. Oil: Refer to Section entitled “Fuel Storage Tanks and Accessories”.

B. Gas: Connect to existing installed gas piping or install gas service piping for firing furnaces, all as required by the drawings and the specifications.

C. Testing: Upon completion of the installation, and in the presence of the Engineer, conduct a performance test on the furnace, for the purpose of checking general operation, proving electrical and mechanical controls and making necessary adjustments.

END OF SECTION

SECTION 238113 – AIR CONDITIONERS

PART 1 GENERAL

1.01 RELATED WORK SPECIFIED ELSEWHERE

A. Pipe and Pipe Fittings: Section 232000.

B. Vibration Isolation: Section 230550.

C. Seismic Restraints: Section 230550.

D. Insulation: Section 230719.

E. Air Filters: Section 234100.

F. Cleaning and Testing: Section 230593.

G. Wiring for Motors and Motor Controllers: Section 260523.

H. Motors, Motor Controllers and Control Wiring: Section 260221.

1.02 PERFORMANCE REQUIREMENTS

A. Design air handling unit and supports to withstand all seismic loads. Refer to seismic loading criteria on the Contract Drawings.

B. Seismic Performance: Design and install air handling units to assure continued performance of their intended function when subjected to the specified seismic forces.

C. Seismic Performance: Design and install air handling units to assure that they remain in place with no separation of any parts when subjected to the specified seismic forces.

D. The design of the air handling units and supports shall be performed by a professional engineer licensed in the State of New York and experienced in the seismic design of air handling units.

1.02 SUBMITTALS

A. Product Data: Manufacturer’s catalog sheets, brochures, performance charts, test data, standard schematic drawings, specifications and installation instructions for each type unit.

B. Quality Control Submittals:

1. Copy of Seismic Qualifications Certificate.

C. Contract Closeout Submittals:

1. Operation and Maintenance Data: Deliver 2 copies of the O&M datafor the installed products to the Engineer.

1.03 QUALITY ASSURANCE

A. Regulatory Requirements:

1. Units shall be factory tested and the design, construction and installation shall be in accordance with the following: ARI, UL and NFPA and all State and Local codes or regulations having jurisdiction.

2. Rate cooling capacities in accordance with the ARI.

3. Electrical components shall be UL listed and factory wiring hall conform to the UL Specifications.

B. Seismic Qualification Certificate: Certificate from air handling unit manufacturer covering air handling units, accessories, supports, and components; and consisting of the following:

1. Basis for Certification: Indicate whether Withstand Certification is based on actual test of assembled components or on calculation.

2. Dimensioned Outline Drawings of Equipment Unit: Identify center of gravity and locate and describe mounting and anchorage provisions, and loads transmitted to structure at each attachment point.

3. Detailed description of equipment anchorage devices on which the certification is based including installation requirements.

4. Comprehensive seismic engineering analysis of air handling units and supports.

1.04 MAINTENANCE

A. Maintenance Service: A full equipped authorized service organization capable of an 8 hours response to service calls and must be available 24 hours a day, 7 days a week to service the completed Work.

PART 2 PRODUCTS

2.01 AIR CONDITIONERS

A. Type: Specifically designed for installation in computer rooms. Furnish equipment totally piped and wired, including all controls. Upon placement in their permanent location in the building, only remote equipment piping and electrical power connections shall be required to make the unit(s) operable.

B. Unit Casing and Frame: Fabricate from heavy gage corrosion resistant steel, properly reinforced for maximum strength and rigidity with an all welded tubular steel or structural steel angle and channel iron framework. Casing shall be of sectional construction, with easily removable or hinged gasketed access panels with fastening devices for ease in servicing all components. Thermally and acoustically line internal surfaces of casing sections in contact with room or conditioned air, with insulation having a non-eroding surface finish. Factory finish all exposed surfaces of unit cabinet and frame with a minimum three coat corrosion resistant baked enamel finish, color as selected by the Engineer from the manufacturer’s standard color charts.

C. Cooling Section: Factory sealed refrigerant system consisting of compressors and evaporator section designed for use with Refrigerant R-410A.

1. Compressors: Accessible, semi-hermetic, reciprocating, direct-driven, constant speed, 1750 RPM industrial type with suction

strainer and reversible oil pumps for pump down control and forced lubrication to all bearing surfaces. Mount compressors on vibration isolators and provide with built-in overloads, oil sight glass, high pressure switch with manual reset and low pressure switch for pump down. Isolate compressors in a compartment separate from the conditioned air space.

2. Evaporator Coil: Multiple row, DX coil, with two independent refrigerant circuits, arranged in an A frame pattern. Fabricate coils from seamless copper tubing with aluminum fins mechanically bonded to tubing. Arrange the refrigerant coil faces, so that each compressor will be utilizing the complete coil face area of each refrigerant circuit. Provide each refrigerant circuit with a hot gas muffler, liquid line filter drier, refrigerant sight glass and moisture indicator, adjustable equalized expansion valves and liquid line solenoid valves. Provide a stainless steel condensate drain pan under the evaporator coil, with threaded drain piping connection in bottom.

D. Fan Section: Two double width, double inlet centrifugal fans, multiple “V” belt driven by a maximum 1750 RPM motor, mounted on an adjustable slide base. Install wheels on a heavy duty steel shaft having self-aligning ball bearings. Statically and dynamically balance fan assembly at factory.

E. Filter Chamber: Integral part of unit provided with access from both sides of unit. Provide filters as recommended by the manufacturer.

F. Accessories: Provide each air conditioner with the following:

1. Vibration isolation base, of type and kind as recommended and furnished by the air conditioner manufacturer.
2. Removable rear panels (for center of room installations).
3. Automatic flush cycle on humidifiers.
4. Hot gas by-pass.
5. Disconnect switch (non-locking or locking).

G. Control Center: Integral part of the units, located on the front side with a hinged door. Provide solid state electronic circuitry, factory wired, with each circuit individually fused and provided with contractors, relays and starters controlled by a 24 volt control circuit. Isolate center from conditioned air stream so as to allow for servicing with the system in operation.

H. Electronic Control System:

1. Total solid state system including start button, stop button, silencing button, temporary loss of power indicator, manual reset circuit breakers, plug-in solid state temperature control with sensitivity adjustment, plug-in solid state humidity control and a back lighted monitoring panel. No visible indicating light shall appear on the panel, unless the actual operating system function requires. When required by system demand the following visual indicators shall appear: Cooling Stage 1 & 2, Heating Stage 1, 2 & 3; Humidification, Dehumidification, Change Filters.

2. Provide each temperature and humidity controller with an adjusting sensing point for room conditions. In addition, provide the temperature and humidity controls with a “push-to-test” calibration check button and built-in visual indicators to indicate control mode of operation. Provide all controls and control sensors of the easily accessible, plug-in module type.

I. Winter Control System: Provide a control system utilizing condenser fan speed control complete with pressure transducers, thermostats and control circuit factory wired and packaged to form a fan speed control box, designed for field installation. Pressure transducer shall automatically sense the highest pressure of operating compressors and control the variable speed condenser fan so as to maintain proper head pressure. Design of system shall allow for positive start-up in an ambient temperature of -30 degrees F. Provide with fan speed control system a solid state winter start-up kit to be installed as an integral part of the control panel. Include with winter control package insulated refrigerant receivers, pressure relief valves for each circuit, head pressure three-way control valves and valves for isolating the refrigerant charge.

2.02 REMOTE AIR COOLED CONDENSER

A. General: Provide an air cooled refrigerant condenser of the draw-through vertical discharge type. Furnish unit complete with a multiple circuit coil; direct driven electric motor operated propeller fans, all totally protected by a heavy duty sheet metal casing, complete with a structural metal stand and wire fan guards. Furnish unit completely factory assembled and provided with all the necessary control and accessories, for operation in ambient air temperatures down to -30 degrees F.

B. Fabrication:

1. Casing: Heavy gage galvanized steel or aluminum sheet metal, reinforced and bolted or welded to assure rigidity. Provide gasketed access panels as required for servicing the motors and all components.

2. Fan Assembly: Propeller type fans arranged for vertical discharge, with aluminum blades and center hubs of zinc coated steel with a corrosion-resistant coating. Coat fan shafts with a weather-resistant coating. Furnish drip-proof fan motors, resiliently mounted and designed for year-round operation, with permanently lubricated ball bearings.

3. Coil: Multiple circuit high capacity type, fabricated of seamless copper tubing with aluminum fins mechanically bonded to tubing. Furnish a maximum fin spacing of 10 per inch.

4. Finish: Provide all exposed surfaces of condenser with a factory applied corrosion-resistant baked enamel finish.

PART 3 EXECUTION

3.01 INSTALLATION

A. Unless otherwise shown or specified install the Work of this Section in accordance with the manufacturer's printed installation instructions.

B. Provide all piping and electrical connections to units through knock-out openings in bottom of units.

3.02 FIELD QUALITY CONTROL

A. Preliminary Requirements: Provide the services of a Company Field Advisor for the following:

1. Inspect air conditioning system installations prior to start-up.
2. Supervise initial start-up of equipment.
3. Instruction of City Personnel.
4. Service.

B. Air Conditioning System Pre-Start-Up and Start-Up:

1. Upon completion of air conditioner installations, the Company Field Advisor shall visit the site, inspect the installations and notify the Engineer of any Work which must be done or modified prior to start-up.
2. Upon completion of required Work, or modifications to installed Work and miscellaneous testing, all as required by the particular air conditioning system or apparatus, the Company Field Advisor shall supervise the conditioner start-up.
3. Start-up the system and conduct a preliminary test, for the purpose of checking the general operation of the air conditioner, proving mechanical and electrical controls and making necessary adjustments.
4. Provide pre-start-up check list, start-up list and operating instructions for air conditioner, framed under rigid plastic and place where directed in the Computer Room.

C. Instruction of City Personnel: The manufacturer's representative shall instruct authorized City Personnel in the operation and maintenance of the air conditioning equipment and all accessories. Provide a minimum of hours for instruction purposes, exclusive of all pre-start-up, start-up and service call time.

END OF SECTION

SECTION 26 0519 – LOW-VOLTAGE ELECTRICAL POWER CONDUCTORS AND CABLES

PART 1 GENERAL

1.1 SUBMITTALS

A. Product Data: Catalog sheets, specifications and installation instructions.

1.2 PRODUCT DELIVERY

A. Mark and tag insulated conductors and cables for delivery to the site. Include:

1. Contractor's name.
2. Project title and number.
3. Date of manufacture (month & year).
4. Manufacturer's name.
5. Data which explains the meaning of coded identification (UL assigned electrical reference numbers, UL assigned combination of color marker threads, etc.).
6. Environmental suitability information (listed or marked "sunlight resistant" where exposed to direct rays of sun; wet locations listed/marked for use in wet locations; other applications listed/marked suitable for the applications).

1.3 CODES AND STANDARDS

A. National Fire Protection Association (NFPA):

1. NFPA 70 National Electrical Codes.

B. Underwriters Laboratories, Inc.:

1. UL 13 Power Limited Circuit Cables.
2. UL 44 Thermoset-Insulated Wires and Cables.
3. UL-83 Thermoplastic Insulated Wire and Cables.
4. UL486A Wire Connectors for Use with Copper Conductors.
5. UL 486B Wire Connectors and Soldering Lugs for Use with Aluminum Conductors.
6. UL 486C Splicing Wire Connectors
7. UL 486D Insulated Wire Connector Systems for Underground Use or in Damp or Wet Locations.
8. UL 486E Equipment Wiring Terminals for Use with Aluminum and/or Copper Conductors.
9. UL 493 Thermoplastic Insulated Underground Feeder and Branch Circuit Cables.
10. UL 510 Polyvinyl Chloride, Polyethylene, and Rubber Insulating Tape.
11. UL 854 Service Entrance Cables.

12. UL 1569 Metal Clad Cables.

C. National Electrical Manufacturers Association (NEMA):

1. WC-30 Color Coding of Wires and Cables.

2. ICEA/S-73-532/NEMA WC-57 Control Cables.

3. ICEA/S-95-658/NEMA WC-70 Nonshielded 0-2kV Cables

PART 2 PRODUCTS

2.1 INSULATED CONDUCTORS AND CABLES

A. Date of Manufacture: No insulated conductor more than one year old when delivered to the site will be acceptable.

B. Acceptable Companies: American Insulated Wire Corp., BICC General Cable Industries Inc., Cerro Wire & Cable Co. Inc., Pirelli Cable Corp., Rome Cable Corp., Southwire Co or approved equal.

C. Conductors: Annealed uncoated copper or annealed coated copper in conformance with the applicable standards for the type of insulation to be applied on the conductor. Conductor sizes No. 8 and larger shall be stranded.

D. Types:

1. Electric Light and Power Wiring:

a. General: Rated 600V, NFPA 70 Type FEP, THHN, THW, THW-2, THWN, THWN-2, XHH, XHHW, XHHW-2.

b. THWN Gasoline and Oil Resistant: Polyvinylchloride insulation rated 600 V with nylon jacket conforming to UL requirements for type THWN insulation, with the words “GASOLINE AND OIL RESISTANT II” marked thereon.

c. USE, USE-2: Dual rated heat and moisture resistant “EPR” insulation rated 600 V with jacket or dual purpose insulation/protective covering conforming to UL requirements for type USE service entrance cables.

2. Class 1 Wiring:

a. No. 18 and No. 16 AWG: Insulated copper conductors suitable for 600 volts, NFPA 70 types KF-2, KFF-2, PAFF, PF, PFF, PGF, PGFF, PTFF, SF-2, SFF-2, TF, TFF, TFN, TFFN, ZF, or ZFF.

b. Larger than No. 16 AWG: Insulated copper conductors suitable for 600 volts, in compliance with NFPA 70 Article 310.

c. Conductor with other types and thickness of insulation may be used if listed for Class 1 circuit use.

3. Class 2 Wiring:

   a. Multiconductor Cables: NFPA 70 Article 725, Types CL2P, CL2R, CL2.

   b. Other types of cables may be used in accordance with NFPA 70 Table 725-61 “Cable Uses and Permitted Substitutions”, as approved.

4. Class 3 Wiring:

   a. Single Conductors No. 18 and No. 16 AWG: Same as Class 1 No. 18 and No. 16 AWG conductors except that:

      1) Conductors are also listed as CL3.

      2) Voltage rating not marked on cable except where cable has multiple listings and voltage marking is required for one or more of the listings.

   b. Multiconductor Cables: NFPA 70 Article 725, Types CL3P, CL3R, CL3.

   c. Other types of cables may be used in accordance with NFPA 70, Table 725-61 “Cable Uses and Permitted Substitutions”, as approved.

2.2 ELECTRICAL CIRCUIT PROTECTIVE SYSTEM

A. Minimum 1-Hour Fire Rating: A system listed in UL Building Materials Directory, product category Electrical Circuit Protective Systems (FHIT).

2.3 CONNECTORS

A. General:

1. Connectors specified are part of a system. Furnish connectors and components, and use specific tools and methods as recommended by connector manufacturer to form complete connector system.

2. Connectors shall be UL 486 A listed, or UL 486 B listed for combination dual rated copper/aluminum connectors (marked AL7CU for 75 degrees C rated circuits and AL9CU for 90 degrees C rated circuits).

B. Splices:

1. Spring Type:

   a. Rated 105° C, 600V; Buchanan/Ideal Industries Inc.’s B-Cap, Electrical Products Div./3M’s Scotchlok Type Y, R, G, B, O/B+, R/Y+, B/G+, or Ideal Industries Inc.’s Wing Nuts or Wire Nuts or approved equal.

   b. Rated 150° C, 600V; Ideal Industries Inc.’s High Temperature Wire-Nut Model 73B, 59B, 3M, Waytek Inc. or approved equal.

2. Indent Type with Insulating Jacket:

   a. Rated 105° C, 600V; Buchanan/Ideal Industries Inc.'s Crimp Connectors, Ideal Industries Inc.'s Crimp Connectors, Penn-Union Corp.'s Penn-Crimps, Thomas & Betts Corp.'s STA-KON or approved equal.

3. Indent Type (Uninsulated): Anderson/Hubbell's Versa-Crimp, VERSAtile, Blackburn/T&B Corp.'s Color-Coded Compression Connectors, Electrical Products Div./3M's Scotchlok 10000, 11000 Series, Framatome Connectors/Burndy's Hydent, Penn-Union Corp.'s BCU, BBCU Series, Thomas & Betts Corp.'s Compression Connectors or approved equal.

4. Connector Blocks: NSI Industries Inc.'s Polaris System, Cooper Industries, Thomas & Betts or approved equal.

5. Resin Splice Kits: Electrical Products Div./3M's Scotchcast Brand Kit Nos. 82A Series, 82-B1 or 90-B1, Scotchcast Brand Resin Pressure Splicing Method or approved equal.

6. Heat Shrinkable Splices: Electrical Products Div./3M's ITCSN, Raychem Corp.'s Thermofit Type WCS, Thomas & Betts Corp.'s SHRINK-KON Insulators or approved equal.

7. Cold Shrink Splices: Electrical Products Div./3M's 8420 Series, 5418A Wesco, SPA004SX Eaton or approved equal.

C. Gutter Taps: Anderson/Hubbell's GP/GT with GTC Series Covers, Blackburn/T&B Corp.'s H-Tap Type CF with Type C Covers, Framatome Connectors/Burndy's Polytap KPU-AC, H-Crimpit Type YH with CF-FR Series Covers, ILSCO's GTA Series with GTC Series Covers, Ideal Industries Inc.'s Power-Connect GP, GT Series with GIC covers, NSI Industries Inc.'s Polaris System, OZ/Gedney Co.'s PMX or PT with PMXC, PTC Covers, Penn-Union Corp.'s CDT Series, Thomas & Betts Corp.'s Color-Keyed H Tap CHT with HTC Covers or approved equal.

D. Terminals: Nylon insulated pressure terminal connectors by Amp-Tyco/Electronics, Electrical Products Div./3M, Framatome Connectors/Burndy, Ideal Industries Inc., Panduit Corp., Penn-Union Corp., Thomas & Betts Corp., Wiremold Co or approved equal.

E. Lugs:

1. Single Cable (Compression Type Lugs): Copper, one or 2 hole style (to suit conditions), long barrel; Anderson/Hubbell's VERSAtile VHCL, Blackburn/T&B Corp.'s Color-Coded CTL, LCN, Framatome Connectors/Burndy's Hylug YA, Electrical Products Div./3M Scotchlok 31036 or 31145 Series, Ideal Industries Inc.'s CCB or CCBL, NSI Industries Inc.'s L, LN Series, Penn-Union Corp.'s BBLU Series, Thomas & Betts Corp.'s 54930BE or 54850BE Series or approved equal.

2. Single Cable (Mechanical Type Lugs): Copper, one or 2 hole style (to suit conditions); Blackburn/T&B Corp.'s Color-Keyed Locktite Series, Framatome Connectors/Burndy's Qiklug Series, NSI

Industries Inc.'s Type TL, Penn-Union Corp.'s VI-TITE Terminal Lug Series, Thomas & Betts Corp.'s Locktite Series or approved equal.

3. Multiple Cable (Mechanical Type Lugs): Copper, configuration to suit conditions; Framatome Connectors/Burndy's Qiklug Series, NSI Industries Inc.'s Type TL, Penn-Union Corp.'s VI-TITE Terminal Lug Series, Thomas & Betts Corp.'s Color-Keyed Locktite Series or approved equal.

2.4 TAPES

A. Insulation Tapes:

1. Plastic Tape: Electrical Products Div./3M's Scotch Super 33+ ,Scotch 88, Plymouth Rubber Co.'s Plymouth/ Bishop Premium 85CW, Shurtape EV77 or approved equal.

2. Rubber Tape: Electrical Products Div./3M's Scotch 130C, Plymouth Rubber Co.'s Plymouth/Bishop W963 Plysafe, Shurtape LR 117 or approved equal.

B. Moisture Sealing Tape: Electrical Products Div./3M's Scotch 2200 or 2210, Plymouth Rubber Co.'s Plymouth/Bishop 4000 Plyseal-V, Shurtape LR 117 or approved equal.

C. Electrical Filler Tape: Electrical Products Div./3M's Scotchfil, Plymouth Rubber Co.'s Plymouth/Bishop 125 Electrical Filler Tape, WW-EF-15 Electrical Filler Tape NSI Industries or approved equal.

D. Color Coding Tape: Electrical Products Div./3M's Scotch 35, Plymouth Rubber Co.'s Plymouth/Bishop Premium 37 Color Coding, EV 077C Shurtape or approved equal.

E. Arc Proofing Tapes:

1. Arc Proofing Tape: Electrical Products Div./3M's Scotch 77, Mac Products Inc.'s AP Series, Plymouth Rubber Co.'s Plymouth/Bishop 53 Plyarc, WW-ARC-30 NSI Industries or approved equal.

2. Glass Cloth Tape: Electrical Products Div./3M's Scotch 27/Scotch 69, Mac Products Inc.'s TAPGLA 5066,, Plymouth Rubber Co.'s Plymouth/Bishop 77 Plyglas, FT 175 Shurtape or approved equal.

3. Glass-Fiber Cord: Mac Products Inc's MAC 0527 or approved equal.

2.5 WIRE-PULLING COMPOUNDS

A. To suit type of insulation; American Polywater Corp.'s Polywater Series, Electric Products Div./3M's WL, WLX, or WLW, Greenlee Textron Inc.'s Y-ER-EAS, Cable Cream, Cable Gel, Winter Gel, Ideal Industries Inc.'s Yellow 77, Aqua-Gel II, Agua-Gel CW, Thomas & Betts Corp.'s Series 15-230 Cable Pulling Lubricants, or Series 15-631 Wire Slick or approved equal.

2.6 TAGS

A. Precision engrave letters and numbers with uniform margins, character size minimum 3/16 inches high.

1. Phenolic: Two color laminated engraver's stock, 1/16 inch minimum thickness, machine engraved to expose inner core color (white).

2. Aluminum: Standard aluminum alloy plate stock, minimum .032 inches thick, engraved areas enamel filled or background enameled with natural aluminum engraved characters.

2.7 WIRE MANAGEMENT PRODUCTS

A. Cable Clamps and Clips, Cable Ties, Spiral Wraps, etc: Catamount/T&B Corp., Ideal Industries Inc, Hubbell Burndy or approved equal.

PART 3 EXECUTION

3.1 INSTALLATION

A. Install conductors in raceways after the raceway system is completed.

B. No grease, oil, or lubricant other than wire-pulling compounds specified may be used to facilitate the installation of conductors.

3.2 CIRCUITING

A. Do not change, group or combine circuits other than as indicated on the drawings without written permission from the Engineer.

3.3 COMMON NEUTRAL CONDUCTOR

A. A common neutral may be used for 2 or 3 branch circuits where the circuits are indicated on the drawings to be enclosed within the same raceway, provided each branch circuit is connected to different phase busses in the panelboard.

B. Exceptions - The following circuits shall have a separate neutral:

1. Circuits containing ground fault circuit interrupter devices.

2. Circuits containing solid state dimmers.

3. Circuits recommended by equipment manufacturers to have separate neutrals.

3.4 CONDUCTOR SIZE

A. Conductor Size:

1. For Electric Light and Power Branch Circuits: Install conductors of size shown on drawings. Where size is not indicated, the minimum size allowed is No. 12 AWG.

2. For Class 1 Circuits:

a. No. 18 and No. 16 AWG may be used provided they supply loads that do not exceed 6 amps (No. 18 AWG), or 8 amps (No. 16 AWG).

b. Larger than No. 16 AWG: Use to supply loads not greater

than the ampacities given in NFPA 70 Section 310-15.

3. For Class 2 Circuits: Any size to suit application.

4. For Class 3 Circuits: Minimum No. 18 AWG.

3.5 COLOR CODING

A. Color Coding for 120/208 Volt Electric Light and Power Wiring:

1. Color Code:

a. 2 wire circuit - black, white.

b. 3 wire circuit - black, red, white.

c. 4 wire circuit - black, red, blue, white.

2. White to be used only for an insulated grounded conductor (neutral). If neutral is not required use black and red, or black, red and blue for phase to phase circuits.

a. “White” for Sizes No. 6 AWG or Smaller:

1) Continuous white outer finish, or:

2) Three continuous white stripes on other than green insulation along its continuous length.

b. “White” for Sizes Larger Than No. 6 AWG:

1) Continuous white outer finish, or:

2) Three continuous white stripes on other than green insulation along its continuous length, or:

3) Distinctive white markings (color coding tape) encircling the conductor, installed on the conductor at time of its installation. Install white color coding tape at terminations, and at 1’ 0” intervals in gutters, pullboxes, and manholes.

3. Colors (Black, Red, Blue):

a. For Branch Circuits: Continuous color outer finish.

b. For Feeders:

1) Continuous color outer finish, or:

2) Color coding tapes encircling the conductors, installed on the conductors at time of their installation. Install color coding tapes at terminations, and at 1’ 0” intervals in gutter, pullboxes, and manholes.

B. Color Coding For 277/480 Volt Electric Light and Power Wiring:

1. Color Code:

a. 2 wire circuit – brown, gray.

b. 3 wire circuit – brown, yellow, gray.

c. 4 wire circuit – brown, yellow, orange, gray.

2. Gray to be used only for an insulated grounded conductor (neutral). If neutral is not required use brown and yellow, or brown, yellow and orange for phase to phase circuits.

   a. "Gray" For Sizes No. 6 AWG or Smaller.

      1) Continuous gray outer finish.

   b. "Gray" For Sizes Larger Than No. 6 AWG:

      1) Distinctive gray markings (color coding tape) encircling the conductor, installed on the conductor at time of its installation. Install gray color coding tape at terminations, and at 1' 0" intervals in gutters, pullboxes, and manholes.

   c. Colors (Brown, Yellow, Orange):

   d. For Branch Circuits: Continuous color outer finish.

   e. For Feeders:

      1) Continuous color outer finish, or:

      2) Color coding tapes encircling the conductors, installed on the conductors at the time of their installation. Install color coding tapes at terminations, and at 1' 0" intervals in gutters, pullboxes, and manholes.

C. More Than One Nominal Voltage System Within A building: Permanently post the color coding scheme at each branch-circuit panelboard.

D. Existing Color Coding Scheme: Where an existing color coding scheme is in use, match the existing color coding if it is in accordance with the requirements of NFPA 70.

E. Color Code For Wiring Other Than Electric Light and Power: In accordance with ICEA/NEMA WC-30 "Color Coding of Wires and Cables". Other coding methods may be used, as approved.

3.6 IDENTIFICATION

A. Identification Tags: Use tags to identify feeders and designated circuits. Install tags so that they are easily read without moving adjacent feeders or requiring removal of arc proofing tapes. Attach tags with non-ferrous wire or brass chain.

1. Interior Feeders: Identify each feeder in pullboxes and gutters. Identify by feeder number and size.

2. Exterior Feeders: Identify each feeder in manholes and in interior pullboxes and gutters. Identify by feeder number and size, and also indicate panel designation from which feeder originates.

3. Street and Grounds Lighting Circuits: Identify each circuit in manholes and lighting standard bases. Identify by circuit number and size, and also indicate building number and panel designation from which circuit originates.

B. Identification Plaque: Where a building or structure is supplied by more than one service, or has any combination of feeders, branch circuits, or services passing through it, install a permanent plaque or directory at each service, feeder and branch circuit disconnect location denoting all other services, feeders, or branch circuits supplying that building or structure or passing through that building or structure and the area served by each.

3.7 WIRE MANAGEMENT

A. Use wire management products to bundle, route, and support wiring in junction boxes, pullboxes, wireways, gutters, channels, and other locations where wiring is accessible.

3.8 EQUIPMENT GROUNDING CONDUCTOR

A. Install equipment grounding conductor:

1. Where specified in other Sections or indicated on the drawings.
2. In conjunction with circuits recommended by equipment manufacturers to have equipment grounding conductor.

B. Equipment grounding conductor is not intended as a current carrying conductor under normal operating circumstances.

C. Color Coding For Equipment Grounding Conductor:

1. Color Code: Green.
2. “Green” For sizes No. 6 AWG or Smaller:
   a. Continuous green outer finish, or:
   b. Continuous green outer finish with one or more yellow stripes, or:
   c. Bare copper (see exception below).
3. “Green” For Sizes Larger Than No. 6:
   a. Stripping the insulation or covering from the entire exposed length (see exception below).
   b. Marking the exposed insulation or covering with green color coding tapes.
   c. Identify at each end and at every point where the equipment grounding conductor is accessible.
4. Exception For use of Bare Copper: Not allowed for use where NFPA 70 specifically requires equipment grounding conductor to be insulated, or where specified in other Sections or indicated on the drawings to be insulated.

3.9 SPECIAL GROUNDING CONDUCTORS

A. Technical Power System Grounding (Equipment grounding conductor isolated from the premises grounded conductor except at a single grounded termination point): Install an insulated grounding conductor

running with the circuit conductors for isolated receptacles or utilization equipment requiring an isolated ground:

1. Color Code: Green.
2. "Green" For Isolated Grounding Conductor:
   a. Continuous green outer finish, or:
   b. Continuous green outer finish with one or more yellow stripes, and:
   c. Different than the "green" used for the equipment grounding conductor run with the circuit (where required).
3. Install label at every point where the conductor is accessible, identifying it as an "Isolated Grounding Conductor".

3.10 ARC PROOFING

A. Arc proof feeders installed in a common pullbox or manhole as follows:

1. Arc proof new feeders.
2. Arc proof existing feeders that are spliced to new feeders.
3. Arc proof each feeder as a unit (except feeders consisting of multiple sets of conductors).
4. Arc proof feeders consisting of multiple sets of conductors by arc proofing each set of conductors as a unit.
5. Arc proof feeders with half-lapped layer of 55 mils thick arc proofing tape and random wrapped or laced with glass cloth tape or glass-fiber cord. For arc proofing tape less than 55 mils thick, add layers to equivalent of 55 mils thick arc proofing tape.

3.11 INSULATED CONDUCTOR AND CABLE SCHEDULE - TYPES AND USE

A. Electric Light and Power Circuits:

1. FEP, THHN, THW, THW-2, THWN, THWN-2, XHH, XHHW, or XHHW-2: Wiring in dry or damp locations (except where special type insulation is required).
2. THWN, THWN-2, XHHW, XHHW-2, USE, or USE-2: Wiring in wet locations (except where type USE or USE-2 insulated conductors are specifically required, or special type insulation is required).
3. THHN, THW-2, THWN-2, XHHW, or XHHW-2: Wiring for electric discharge lighting circuits (fluorescent, HID), except where fixture listing requires wiring rated higher than 90° C.
4. THWN Marked "Gasoline and Oil Resistant": Wiring to gasoline and fuel oil pumps.
5. USE, or USE-2: Underground/ below grade wiring.
6. USE, or USE-2 Marked "Sunlight Resistant":
   a. Service entrance wiring to the service equipment.
   b. Wiring exposed to the weather and unprotected (except where special type insulation is required).

B. Emergency Feeder Circuits: Use electrical circuit protective system.

C. Class 1 Circuits: Use Class 1 wiring specified in Part 2 (except where special type insulation is required).

D. Class 2 Circuits: Use Class 2 wiring specified in Part 2 (except where special type insulation is required).

E. Class 3 Circuits: Use Class 3 wiring specified in Part 2 (except where special type insulation is required).

3.12 CONNECTOR SCHEDULE - TYPES AND USE

A. Temperature Rating: Use connectors that have a temperature rating, equal to, or greater than the temperature rating of the conductors to which they are connected.

B. Splices:

1. Locations:

a. For Conductors No. 8 AWG or Smaller: Use spring type pressure connectors, indent type pressure connectors with insulating jackets, or connector blocks (except where special type splices are required).

b. For Conductors No. 6 AWG or Larger: Use connector blocks or uninsulated indent type pressure connectors. Fill indentions in uninsulated connectors with electrical filler tape and apply insulation tape to insulation equivalent of the conductor, or insulate with heat shrinkable splices or cold shrink splices.

c. Gutter Taps in Panelboards: For uninsulated type gutter taps fill indentions with electrical filler tape and apply insulation tape to insulation equivalent of the conductor, or insulate with gutter tap cover.

2. Damp Locations: As specified for dry locations, except apply moisture sealing tape over the entire insulated connection (moisture sealing tape not required if heat shrinkable splices or cold shrink splices are used).

3. Wet Locations: Use uninsulated indent type pressure connectors and insulate with resin splice kits, cold shrink splices or heat shrinkable splices.

Exception: Splices above ground which are totally enclosed and protected in NEMA 3R, 4, 4X enclosures may be spliced as specified for damp locations.

C. Terminations:

1. For Conductors No. 10 AWG or Smaller: Use terminals for:

a. Connecting wiring to equipment designed for use with terminals.

2. For Conductors No. 8 AWG or Larger: Use compression or mechanical type lugs for:

a. Connecting cables to flat bus bars.

b. Connecting cables to equipment designed for use with lugs.

3. For Conductor Sizes Larger Than Terminal Capacity On Equipment: Reduce the larger conductor to the maximum conductor size that terminal can accommodate (reduced section not longer than one foot). Use compression or mechanical type connectors suitable for reducing connection.

END OF SECTION

SECTION 26 0526 – GROUNDING AND BONDING FOR ELECTRICAL SYSTEMS

PART 1 GENERAL

1.1 SUBMITTALS

A. Product Data: Catalog sheets, specifications and installation instructions.

PART 2 PRODUCTS

2.1 MATERIALS

A. Ground Clamps (Cable to Pipe): Blackburn/T&B Corp.'s GUV, Framatome Connectors/Burndy Corp.'s GAR, GD, GP, GK, OZ/Gedney Co.'s ABG, CG or approved equal.

B. Ground Clamps (Cable to Rod): Blackburn/T&B Corp.'s GG, GGH, JAB, JABH, GUV, Dossert Corp.'s GN, GPC, Framatome Connectors/Burndy Corp.'s GP, GX, GRC, OZ/Gedney Co.'s ABG or approved equal.

C. Ground Lugs: Copper, one or 2 hole style (to suit conditions), long barrel; Anderson/Hubbell's VERSAtile VHCL, Blackburn/T&B Corp.'s Color-Coded CTL, LCN, Framatome Connectors/Burndy's Hylug YA, Electrical Products Div./3M Scotchlok 31036 or 31145 Series, Ideal Industries Inc.'s CCB or CCBL, or Thomas & Betts Corp.'s 54930BE ,54850BE Series or approved equal.

D. Exothermic Type Weld: Erico Inc.'s Cadweld Process, Furseweld/T&B Corp.'s, Hubbell BurndyExothermic Welding System or approved equal.

E. Compression Connectors: Thomas & Betts, Burndy Corp.'s, 3M ScotchlokHyground Systemor approved equal.

F. Rod Electrodes: Copper clad (minimum .010 jacket) ground rods minimum 3/4 inches diameter by 10'-0" long.

G. Plate Electrodes: Copper plates minimum 0.06 inches thick by 2'-0" square feet of surface area.

H. Grounding Electrode Conductors and Bonding Conductors: Copper conductors, bare or insulated with THW, THW-2, XHHW, XHHW-2, THWN, THWN-2 or THHN insulation.

I. Hardware: Silicon-bronze bolts, nuts, flat and lock washers etc. as manufactured by Dossert Corp., Framatome Connectors/Burndy Corp., OZ/Gedney Co or approved equal.

PART 3 EXECUTION

3.1 INSTALLATION

A. Connections:

1. Make grounding and bonding connections, except buried connections, with silicon-bronze hardware and ground clamps, ground lugs or compression connectors, to suit job conditions.

2. For buried connections use exothermic type weld or compression connectors.

END OF SECTION

SECTION 26 05 29 – HANGERS AND SUPPORTS FOR ELECTRICAL SYSTEMS

PART 1 GENERAL

1.1 SUBMITTALS

A. Shop Drawings: Show support details if different from methods specified or shown on the drawings.

B. Product Data: Catalog sheets, specifications and installation instructions.

PART 2 PRODUCTS

2.1 ANCHORING DEVICES

A. Sleeve Anchors (FS FF-S-325 Group II, Type 3, Class 3): Molly/Emhart's Parasleeve Series, Phillips' Red Head AN, HN, FS Series, Ramset's Dynabolt Series or approved equal.

B. Wedge Anchors (FS FF-S-325 Group II, Type 4, Class 1): Hilti's Kwik Bolt Series, Molly/Emhart's Parabolt Series, Phillips' Red Head WS, Ramset's Trubolt Series or approved equal.

C. Self-Drilling Anchors (FS FF-S-325 Group III, Type 1): Phillips' Red Head Series S, Ramset's Ram Drill Series or approved equal.

D. Non-Drilling Anchors (FS FF-S-325 Group VIII, Type 1): Hilti's Drop-In Anchor Series, Phillips' Red Head J Series, Ramset's Dynaset Series or approved equal.

E. Stud Anchors (FS FF-S-325 Group VIII, Type 2): Phillips' Red Head JS Series or approved equal.

2.2 CAST-IN-PLACE CONCRETE INSERTS

A. Continuous Slotted Type Concrete Insert, Galvanized:

1. Load Rating 2000 lbs./ft.: Kindorf's D-990.

2. Manufactured by Kindorf Thomas & Betts, B-line, Versa Bar or approved equal.

B. Threaded Type Concrete Insert: Galvanized ferrous castings, internally threaded.

C. Wedge Type Concrete Insert: Galvanized box-type ferrous castings, designed to accept bolts having special wedge shaped heads.

2.3 MISCELLANEOUS FASTENERS

A. Except where shown otherwise on the Drawings, furnish type, size, and grade required for proper installation of the Work, selected from the following: Furnish galvanized fasteners for exterior use, or for items anchored to exterior walls, except where stainless steel is indicated.

1. Standard Bolts and Nuts: ASTM A 307, Grade A, regular hexagon head.

2. Lag Bolts: FS FF-B-561, square head type.

3. Machine Screws: FS FF-S-92, cadmium plated steel.

4. Machine Bolts: FS FF-B-584 heads; FF-N-836 nuts.

5. Wood Screws: FS FF-S-111 flat head carbon steel.

6. Plain Washers: FS FF-W-92, round, general assembly grade carbon steel.

7. Lock Washers: FS FF-W-84, helical spring type carbon steel.

8. Toggle Bolts: Tumble-wing type; FS FF-B-588, type, class and style as required to sustain load.

B. Stainless Steel Fasteners: Type 302 for interior Work; Type 316 for exterior Work; Phillips head screws and bolts for exposed Work unless otherwise specified.

2.4 TPR (THE PEEL RIVET) FASTENERS

A. 1/4 inch diameter, threadless fasteners distributed by Subcon Products, SFS Intec, Ornit blind rivets or approved equal.

2.5 POWDER DRIVEN FASTENER SYSTEMS

A. Olin Corp.'s Ramset Fastening Systems, or Phillips Drill Company Inc.'s Red Head Powder, Hilti Inc Actuated Systems or approved equal.

2.6 HANGER RODS

A. Mild low carbon steel, unless otherwise specified; fully threaded or threaded each end, with nuts as required to position and lock rod in place. Unless galvanized or cadmium plated, provide a shop coat of red lead or zinc chromate primer paint.

2.7 "C" BEAM CLAMPS

A. With Conduit Hangers:

1. For 1 Inch Conduit Maximum: B-Line Systems Inc.'s BG-8, BP-8 Series, Caddy/Erico Products Inc.'s BC-8P and BC-8PSM Series, GB Electrical Inc.'s HIT 110-412 Series or approved equal.

2. For 3 Inch Conduit Maximum: Appleton Electric Co.'s BH-500 Series beam clamp with H50W/B Series hangers, Kindorf's 500 Series beam clamp with 6HO-B Series hanger, OZ/Gedney Co.'s IS-500 Series beam clamp with H-OWB Series hanger or approved equal.

3. For 4 Inch Conduit Maximum: Kindorf's E-231 beam clamp and E-234 anchor clip and C-149 series lay-in hanger; Unistrut Corp.'s P2676 beam clamp and P-1659A Series anchor clip with J1205 Series lay in hanger, Eaton B-Line Beam C Clamps HDG, Emerson Appleton Beam Clamp or approved equal.

B. For Hanger Rods:

1. For 1/4 Inch Hanger Rods: B-Line Systems Inc.'s BC, Caddy/Erico Products Inc.'s BC, GB Electrical Inc.'s HIT 110, Kindorf's 500, 510, Unistrut Corp.'s P1648S, P2398S, P2675, P2676 or approved equal.

2. For 3/8 Inch Hanger Rods: Caddy/Erico Products Inc.'s BC, Kindorf's 231-3/8, 502, Unistrut Corp.'s P1649AS, P2401S, P2675, P2676 or approved equal.

3. For 1/2 Inch Rods: Appleton Electric Co. BH-500 Series, Kindorf's 500 Series, 231-1/2, OZ/Gedney Co.'s IS-500 Series, Unistrut Corp.'s P1650AS, P2403S, P2676 or approved equal.

4. For 5/8 Inch Rods: Unistrut Corp.'s P1651AS beam clamp and P1656A Series anchor clip or approved equal.

5. For 3/4 Inch Rods: Unistrut Corp.'s P1653S beam clamp and P1656A Series anchor clip or approved equal.

2.8 CHANNEL SUPPORT SYSTEM

A. Channel Material: 12 gage steel.

B. Finishes:

1. Phosphate and baked green enamel/epoxy.

2. Pre-galvanized.

3. Electro-galvanized.

4. Hot dipped galvanized.

5. Polyvinyl chloride (PVC), minimum 15 mils thick.

C. Fittings: Same material and finish as channel.

D. UL Listed Systems:

1. B-Line Systems Inc.'s B-22 (1-5/8 x 1-5/8 inches), B-12 (1-5/8 x 2-7/16 inches), B-11 (1-5/8 x 3-1/4 inches).

2. Grinell Corp.'s Allied Power-Strut PS 200 (1-5/8 x 1-5/8 inches), PS 150 (1-5/8 x 2-7/16 inches), PS 100 (1-5/8 x 3-1/4 inches).

3. Kindorf's B-900 (1-1/2 x 1-1/2 inches), B-901 (1-1/2 x 1-7/8 inches), B-902 (1-1/2 x 3 inches).

4. Unistrut Corp.'s P-3000 (1-3/8 x 1-5/8 inches), P-5500 (1-5/8 x 2-7/16 inches), P-5000 (1-5/8 x 3-1/4 inches).

5. Versabar Corp.'s VA-1 (1-5/8 x 1-5/8 inches), VA-3 (1-5/8 x 2-1/2 inches).

6. Or approved equal.

2.9 MISCELLANEOUS FITTINGS

A. Side Beam Brackets: B-Line Systems Inc.'s B102, B103, B371-2, Kindorf's B-915, or Versabar Corp.'s VF-2305, VF-2507 or approved equal.

B. Pipe Straps:

1. Two Hole Steel Conduit Straps: B-Line Systems Inc.'s B-2100 Series, Kindorf's C-144 Series, Unistrut Corp.'s P-2558 Series or approved equal.

2. One Hole Malleable Iron Clamps: Kindorf's HS-400 Series, OZ/ Gedney Co.'s 14-G Series, 15-G Series (EMT) or approved equal.

C. Deck Clamps: Caddy/Erico Products Inc.'s DH-4-T1 Series or approved equal.

D. Fixture Stud and Strap: OZ/Gedney Co.'s SL-134, Steel City's FE-431 or approved equal.

E. Supporting Fittings for Pendent Mounted Industrial Type Fluorescent Fixtures on Exposed Conduit System:

1. Ball Hanger: Appleton Electric Co.'s AL Series, Crouse-Hinds Co.'s AL Series, Eaton Cooper Industries or approved equal.
2. Flexible Fixture Hanger: Appleton Electric Co.'s UNJ-50, UNJ-75, Crouse-Hinds Co.'s UNJ115, Eaton Cooper Industries or approved equal.
3. Flexible (Hook Type) Fixture Hanger: Appleton Electric Co.'s FHHF, Crouse-Hinds Co.'s UNH-1, Eaton Cooper Industries or approved equal.
4. Eyelet: Unistrut Corp.'s M2250, Eaton Cooper Industries, Schneider Electric or approved equal.
5. Eyelet with Stud: Kindorf's H262, Unistrut Corp.'s M2350, Schneider Electric, Eaton Cooper Industries or approved equal.
6. Conduit Hook: Appleton Electric Co.'s FHSN, Crouse-Hinds Co.'s UNH-13, Eaton Cooper Industries or approved equal.

F. Supporting Fasteners (Metal Stud Construction): Metal stud supports, clips and accessories as produced by Caddy/Erico, Eaton Cooper Industries, Schneider Electric Products Inc or approved equal.

PART 3 EXECUTION

3.1 INSTALLATION

A. Where specific fasteners are not specified or indicated for securing items to in-place construction, provide appropriate type, size, and number of fasteners for a secure, rigid installation.

B. Install anchoring devices and other fasteners in accordance with manufacturer's printed instructions.

C. Make attachments to structural steel wherever possible.

3.2 FASTENER SCHEDULE

A. Material:

1. Use cadmium or zinc coated anchors and fasteners in dry locations.
2. Use hot dipped galvanized or stainless steel anchors and fasteners in damp and wet locations.
3. For corrosive atmospheres or other extreme environmental conditions, use fasteners made of materials suitable for the conditions.

B. Types and Use: Unless otherwise specified or indicated use:

1. Cast-in-place concrete inserts in fresh concrete construction for direct pull-out loads such as shelf angles or fabricated metal items and supports attached to concrete slab ceilings.
2. Anchoring devices to fasten items to solid masonry and concrete when the anchor is not subjected to pull out loads, or vibration in shear loads.
3. Toggle bolts to fasten items to hollow masonry and stud partitions.
4. TPR fasteners to fasten items to plywood backed gypsum board ceilings.

5. Metallic fasteners installed with electrically operated or powder driven tools for approved applications, except:

    a. Do not use powder driven drive pins or expansion nails.

    b. Do not attach powder driven or welded studs to structural steel less than 3/16 inch thick.

    c. Do not support a load, in excess of 250 lbs from any single welded or powder driven stud.

    d. Do not use powder driven fasteners in precast concrete.

3.3 ATTACHMENT SCHEDULE

A. General: Make attachments to structural steel or steel bar joists wherever possible. Provide intermediate structural steel members where required by support spacing. Select steel members for use as intermediate supports based on a minimum safety factor of 5.

1. Make attachments to steel bar joists at panel points of joists.

2. Do not drill holes in main structural steel members.

3. Use "C" beam clamps for attachment to steel beams.

B. Where it is not possible to make attachments to structural steel or steel bar joists, use the following methods of attachment to suit type of construction unless otherwise specified or indicated on the drawings:

1. Attachment to Steel Roof Decking (No Concrete Fill):

    a. Decking With Hanger Tabs: Use deck clamps.

    b. Decking Without Hanger Tabs:

        1) Before Roofing Has Been Applied: Use 3/8 inch threaded steel rod welded to a 4 x 4 x 1/4 inch steel plate and installed through 1/2 inch hole in roof deck.

        2) After Roofing Has Been Applied: Use welding studs, or self-drilling/tapping fasteners. Exercise extreme care when installing fasteners to avoid damage to roofing.

2. Attachment to Concrete Filled Steel Decks (Total thickness, 2-1/2 inches or more):

    a. Before Fill Has Been Placed:

        1) Use thru-bolts and fish plates.

        2) Use welded studs. Do not support a load in excess of 250 pounds from a single welded stud.

    b. After Fill Has Been Placed: Use welded studs. Do not support a load in excess of 250 lbs from a single welded stud.

3. Attachment to Cast-In-Place Concrete:

    a. Fresh Concrete: Use cast-in-place concrete inserts.

4. Attachment to Cored Precast Concrete Decks:

    a. New Construction: Use thru-bolts and fish plates before Construction Work Contractor has placed concrete fill over decks.

5. Attachment to Hollow Block or Tile Filled Concrete Deck:

    a. New Construction: Use cast-in-place concrete inserts by having Construction Work Contractor omitting blocks and pouring solid blocks with insert where required.

6. Attachment to Waffle Type Concrete Decks:

    a. New Construction:

        1) Use cast-in-place concrete inserts in fresh concrete.

        2) If concrete fill has been applied over deck, thru-bolts and fish plates may be used where additional concrete or roofing is to be placed over the deck.

7. Attachment to Precast Concrete Planks: Use anchoring devices, except do not make attachments to precast concrete planks less than 2-3/4 inches thick.

8. Attachment to Precast Concrete Tee Construction:

    a. New Construction:

        1) Use tee hanger inserts between adjacent flanges.

        2) Use thru-bolts and fish plates, except at roof deck without concrete fill.

    b. Existing Construction:

        1) Use anchoring devices installed in webs of tees. Install anchoring devices as high as possible in the webs.

    c. Do not use powder driven fasteners.

    d. Exercise extreme care in drilling holes to avoid damage to reinforcement.

9. Attachment to Wood Construction: Use side beam brackets fastened to the sides of wood members to make attachments for hangers.

    a. Under 15 lbs Load: Attach side beam brackets to wood members with 2 No. 18 x 1-1/2 inch long wood screws, or 2 No. 16 x 1-1/2 inch long drive screws.

    b. Over 15 lbs Load: Attach side beam brackets to wood members with bolts and nuts or lag bolts. Do not use lag bolts in wooden members having a nominal thickness (beam face) under 2 inches in size. Install bolts and nuts or lag bolts in the side of wood members at the mid-point or slightly above. Install plain washers under all nuts.

LOAD	LAG BOLT SIZE	BOLT DIA.
15 lbs to 30 lbs	3/8 x 1-3/4 inches	3/8 inch
31 lbs to 50 lbs	1/2 x 2 inches	1/2 inch
Over 50 lbs to load limit of structure.	Use bolt & nut	5/8 inch

c. Bottom chord of wood trusses may be utilized as structural support, but method of attachment must be specifically approved.

d. Do not make attachments to the diagonal or vertical members of wood trusses.

e. Do not make attachments to the nailing strips on top of steel beams.

10. Attachment to Metal Stud Construction: Use supporting fasteners manufactured specifically for the attachment of raceways and boxes to metal stud construction.

a. Support and attach outlet boxes so that they cannot torque/twist. Either:

1) Use bar hanger assembly, or:

2) In addition to attachment to the stud, also provide far side box support.

3.4 CONDUIT SUPPORT SCHEDULE

A. Provide number of supports as required by New York City Electrical Code.

B. Use pipe straps and specified method of attachment where conduit is installed proximate to surface of wood or masonry construction.

1. Use hangers secured to surface with specified method of attachment where conduit is suspended from the surface.

C. Use "C" beam clamps and hangers where conduit is supported from steel beams.

D. Use deck clamps and hangers where conduit is supported from steel decking having hanger tabs.

1. Where conduit is supported from steel decking which does not have hanger tabs, use clamps and hangers secured to decking, utilizing specified method of attachment.

E. Use channel support system supported from structural steel for multiple parallel conduit runs.

F. Where conduits are installed above ceiling, do not rest conduit directly on runner bars, T-Bars, etc.

1. Conduit Sizes 2-1/2 Inches and Smaller: Support conduit from ceiling supports or from construction above ceiling.

2. Conduit Sizes Over 2-1/2 Inches: Support conduit from beams, joists, or trusses above ceiling.

3.5 LIGHTING FIXTURE SUPPORT SCHEDULE

A. General: Do not support fixtures from ceilings or ceiling supports unless it is specified or indicated on the drawings to do so.

1. Support fixtures with hanger rods attached to beams, joists, or trusses. Hanger rod diameter, largest standard size that will fit in mounting holes of fixture.

a. Where approved, channel supports may span and rest upon the lower chord of trusses and be utilized for the support of lighting fixtures.

b. Where approved, channel supports may span and be attached to the underside of beams, joists, or trusses and be utilized for the support of lighting fixtures.

2. Use 2 nuts and 2 washers on lower end of each hanger rod to hold and adjust fixture (one nut and washer above top of fixture housing, one nut and washer below top of fixture housing).

a. Where specified that an adequately supported outlet box is to support a fixture or be utilized as one point of support, support the box so that it may be adjusted to bring the face of the outlet box even with surface of ceiling.

B. Specific Installations Where Fixtures May Be Supported From New Ceilings Being Installed By Construction Work Contractor:

1. Support surface mounted fluorescent fixtures and incandescent fixtures directly from plywood backed gypsum board ceilings.

2. Support surface mounted fluorescent fixtures and incandescent fixtures directly from framing or furring members of fire rated suspended ceilings (double gypsum board).

3. Support recessed mounted fluorescent fixtures and incandescent fixtures directly from furring members of furred gypsum board ceilings.

4. Support recessed mounted fluorescent fixtures and incandescent fixtures directly from the suspension system of suspended acoustical ceilings. Exception: Support each fixture weighing more than 50 pounds (including lamps) independent of the suspended ceiling grid.

5. Deliver documents which state actual fixture weights and indicate fixture locations to the Engineer.

C. Number of Supports For Ceiling Mounted Lighting Fixtures: Provide at least the following number of supports. Provide additional supports when recommended by fixture manufacturer, or shown on the drawings.

1. Commercial and Industrial Fluorescent Fixtures:

a. Support individual fluorescent fixtures less than 2 feet wide at 2 points.

b. Support continuous row fluorescent fixtures less than 2 feet wide at points equal to the number of fixtures plus one. Uniformly distribute the points of support over the row of fixtures.

c. Support individual fluorescent fixtures 2 feet or wider at 4 corners.

d. Support continuous row fluorescent fixtures 2 feet or wider at points equal to twice the number of fixtures plus 2. Uniformly distribute the points of support over the row of fixtures.

e. An adequately supported outlet box may be utilized as one point of support for fixtures weighing less than 50 pounds.

2. Vandal Resistant, and Minimum Security Fluorescent Fixtures:

a. Support individual fluorescent fixtures less than 2 feet wide at 4 corners.

b. Support continuous row fluorescent fixtures less than 2 feet wide at points equal to twice the number of fixtures. Uniformly distribute the points of support.

c. Support individual fluorescent fixtures 2 feet or wider at each corner and one support midway along each side of longest axis (6 supports total).

d. Support continuous row fluorescent fixtures 2 feet or wider at points equal to 4 times the number of fixtures. Uniformly distribute the points of support.

e. An adequately supported outlet box may be utilized as one point of support for fixtures weighing less than 50 pounds.

3. Medium Security Fluorescent Fixtures: Support each fixture at minimum of 6 points (each corner and midway along each side of longest axis). Outlet box shall not be counted as a point of support.

4. Maximum Security Fluorescent Fixtures: Support each fixture at minimum of 8 points (each corner, and 2 supports spaced equally along each side of longest axis). Outlet box shall not be counted as a point of support.

5. Mercury Vapor, Metal Halide, and High Pressure Sodium Fixtures:

a. Commercial Style: Support fixture at 2 points.

b. Industrial Style: Support individual fixtures at one point.

c. Vandal Resistant Style: Support fixture at 4 points.

d. An adequately supported outlet box may be utilized as one point of support for fixtures weighing less than 50 pounds.

6. Commercial and Industrial Incandescent Fixtures: Support fixture from adequately supported outlet box, to suit fixture design (fixture weight less than 50 pounds).

7. Vandal Resistant Incandescent Fixtures: Support fixture from adequately supported outlet box to suit fixture design, plus 2 fasteners through back of fixture into suitable construction behind fixture.

D. Number of Supports For Wall Mounted Lighting Fixtures: Provide at least the following number of supports. Provide additional supports when recommended by fixture manufacturer, or shown on the drawings.

1. Commercial and Industrial Fluorescent Fixtures:

a. Support individual fluorescent fixtures 2 feet long or less at 2 points.

b. Support individual fluorescent fixtures over 2 feet long at 3 points.

c. Support continuous row fluorescent fixtures at points equal to twice the number of fixtures. Uniformly distribute the points of support.

d. An adequately supported outlet box may be utilized as one point of support for fixtures weighing less than 50 pounds.

2. Vandal Resistant, and Minimum Security Fluorescent Fixtures:

a. Support individual fluorescent fixtures 2 feet long or less at 4 points (each corner).

b. Support individual fluorescent fixtures over 2 feet long at 6 points (each corner and midway along each side of longest axis).

c. Support continuous row fluorescent fixtures at points equal to 6 times the number of fixtures. Uniformly distribute the points of support.

d. An adequately supported outlet box may be utilized as one point of support for fixtures weighing less than 50 pounds.

3. Medium Security, and Maximum Security Fluorescent Fixtures:

a. Support each fluorescent fixture 2 feet long or less at minimum of 4 points (each corner).

b. Support each fluorescent fixture over 2 feet long, to 3 feet long at a minimum of 6 points (each corner and midway along each side of longest axis).

c. Support each fluorescent fixture over 3 feet long, to 8 foot long at minimum of 8 points (each corner, and 2 supports spaced equally along each side of longest axis).

d. Outlet box shall not be counted as a point of support.

4. Mercury Vapor, Metal Halide, and High Pressure Sodium Fixtures:

a. Commercial and Industrial Style: Support fixture at 2 points (Support arm mounted style at 4 points).

b. Vandal Resistant Style: Support fixture at 4 points.

c. An adequately supported outlet box may be used as one point of support for fixtures weighing less than 50 pounds.

5. Commercial and Industrial Incandescent Fixtures: Support fixture from adequately supported outlet box, to suit fixture design (fixture weight less than 50 pounds).

6. Vandal Resistant Incandescent Fixtures: Support fixture from adequately supported outlet box to suit fixture design, plus 2 fasteners through back of fixture into suitable construction behind fixture.

3.6 CHANNEL SUPPORT SYSTEM SCHEDULE

A. Use channel support system where specified or indicated on the drawings.

B. Channel supports may be used, as approved, to accommodate mounting of equipment.

C. Material and Finish:

1. Dry Locations: Use 12 gage steel channel support system having any one of the specified finishes.

2. Damp Locations: Use 12 gage steel channel support system having any one of the specified finishes except green epoxy/enamel.

3. Wet Locations: Use 12 gage steel channel support system having hot dipped galvanized, or PVC finish.

END OF SECTION

SECTION 26 0533 – RACEWAY AND BOXES FOR ELECTRICAL SYSTEMS

PART 1 GENERAL

1.1 REFERENCES

A. NEMA, ANSI, and UL.

1.2 SUBMITTALS

A. Product Data: Catalog sheets, specifications and installation instructions.

1.3 MAINTENANCE

A. Spare Parts: Furnish the following items in the manufacturer's original containers labeled with the names of the items and locations where the items would be used. Store them at the site where directed:

1. Touch up coating compound (one spray type can and one non-spray can with brush top).

PART 2 PRODUCTS

2.1 RACEWAYS

A. Rigid Ferrous Metal Conduit: Steel, hot dipped galvanized on the outside and inside, UL categorized as Rigid Ferrous Metal Conduit (identified on UL Listing Mark as Rigid Metal Conduit - Steel or Rigid Steel Conduit), by Allied Tube & Conduit Corp., LTV Copperweld, Wheatland Tube Co or approved equal.

B. Intermediate Ferrous Metal Conduit: Steel, galvanized on the outside and enameled on the inside, UL categorized as Intermediate Ferrous Metal Conduit (identified on UL Listing Mark as Intermediate Metal Conduit or IMC), by Allied Tube & Conduit Corp., LTV Copperweld, Wheatland Tube Co or approved equal.

C. Electrical Metallic Tubing: Steel, galvanized on the outside and enameled on the inside, UL categorized as Electrical Metallic Tubing (identified on UL Listing Mark as Electrical Metallic Tubing), by Allied Tube & Conduit Corp., LTV Copperweld, Wheatland Tube Co or approved equal.

D. Flexible Metal Conduit: Galvanized steel strip shaped into interlocking convolutions, UL categorized as Flexible Metal Conduit (identified on UL Listing Mark as Flexible Steel Conduit or Flexible Steel Conduit Type RW), by AFC Cable Systems Inc., Anamet Electrical Inc., Electri-Flex Co., International Metal Hose Co or approved equal.

E. Liquid-tight Flexible Metal Conduit: UL categorized as liquid-tight flexible metal conduit (identified on UL Listing Mark as Liquid-Tight Flexible Metal Conduit, also specifically marked with temperature and environment application data), by AFC Cable Systems Inc., Anamet Electrical Inc., Electri-Flex Co., Universal Metal Hose Co or approved equal.

F. Rigid Nonmetallic PVC Conduit, Fittings, and Accessories: UL categorized as Rigid Nonmetallic, Schedule 40 and Schedule 80 PVC conduit

(identified on UL Listing Mark as Rigid Nonmetallic Conduit Aboveground and Underground Schedule 40; Rigid Nonmetallic Conduit Aboveground and Underground Extra Heavy Wall Schedule 80), by Beck Mfg./Picoma Industries, Cantex Inc., Carlon/Div. Of Lamson and Sessions, Ipex Inc., J-M Mfg. Co. Inc., National Pipe & Plastics Inc., Queen City Plastics Inc or approved equal.

G. Plastic Coated Rigid Metal Conduit, Fittings, and Accessories: Rigid ferrous metal conduit, fittings, and accessories coated with 40 mils thick polyvinylchloride coating; Ocal/T&B Corp.'s Ocal-Blue System, PCD Inc.'s KorKap, KorKap XL, or Robroy Industries' Plasti-bond Perma-Cote System or approved equal.

2.2 FITTINGS AND ACCESSORIES

A. Insulated Bushings:

1. Threaded, malleable iron/zinc electroplate with 105 degrees C minimum plastic insulated throat; Appleton Electric Co.'s BU50I Series, Cooper/Crouse-Hinds' 1031 Series, OZ/Gedney Co.'s IBC-50 Series, Raco Inc.'s 1132 Series, Steel City/T & B Corp.'s BI-901 Series, Thomas & Betts Corp.'s 1222 Series or approved equal.

2. Threaded malleable iron with 150 degrees C plastic throat; Appleton Electric Co.'s BU501 Series, Cooper/Crouse-Hinds' H1031 Series, OZ/Gedney Co.'s IBC-50 Series or approved equal.

B. Plastic Bushings for 1/2 and 3/4 Inch Conduit:

1. 105 degrees C minimum temperature rating; Appleton Electric Co.'s BBU50, BBU75, Blackburn (T & B Corp.'s) 50 BB, 75 BB, Cooper/Crouse-Hinds' 931,932, or OZ/Gedney Co.'s IB-50, IB-75, Raco Inc.'s 1402, 1403, Steel City/T & B Corp.'s BU-501, BU-502, Thomas & Betts Corp.'s 222, 223 or approved equal.

2. 150 degrees C temperature rating; Appleton Electric Co.'s BBU50H, BBU75H, Cooper/Crouse-Hinds' H-931, H-932, OZ/Gedney Co.'s A-50, A-75 or approved equal.

C. Insulated Grounding Bushings:

1. Threaded, malleable iron/zinc electroplate with 105 degrees C minimum plastic insulated liner, and ground lug; Appleton Electric Co.'s GIB-50 Series, Cooper/Crouse-Hinds' GLL Series, OZ/Gedney Co.'s IBC-50L Series, Raco Inc.'s 1212 Series, Steel City/T & B Corp.'s BG-801 (1/2 to 2") Series, Thomas & Betts Corp.'s 3870 or approved equal.

2. Threaded malleable iron/zinc electroplate with 150 degrees C plastic insulated liner, and ground lug; Appleton Electric Co.'s GIB Series, Cooper/Crouse-Hinds' HGLL Series, or OZ/Gedney Co.'s IBC-50L Series, Thomas & Betts Corp.'s 3870 or approved equal.

D. Connectors and Couplings:

1. Locknuts: UL, steel/zinc electroplate; Appleton Electric Co.'s BL-50 Series, Cooper/Crouse-Hinds' 11 Series, OZ/Gedney Co.'s 1-

50S Series, Raco Inc.'s 1002 Series, Steel City/T&B Corp.'s LN-101 Series, Thomas & Betts Corp.'s 141 Series or approved equal.

2. Grounding Wedge: Thomas & Betts Corp.'s 3650 Series, Schneider Electric, OZ/Gedney Co.'s or approved equal.

3. Couplings For Rigid Metal and IMC Conduit: Standard galvanized threaded couplings as furnished by conduit manufacturer, Allied Tube & Conduit Corp.'s Kwik-Couple, Eaton Cooper Industries, OZ/Gedney Co.'s or approved equal.

4. Three Piece Conduit Coupling For Rigid Metal and IMC Conduit: Steel, malleable iron, zinc electroplate; Allied Tube & Conduit Corp.'s Kwik-Couple, Appleton Electric Co.'s EC-50 Series, Cooper/Crouse-Hinds' 190M Series, OZ/Gedney Co.'s 4-50 Series, Raco Inc.'s 1502 Series, Steel City/T & B Corp.s EK-401 Series, Thomas & Betts Corp.'s 675 Series or approved equal.

5. Electrical Metallic Tubing Couplings and Insulated Connectors: Compression type, steel/zinc electroplate; Appleton Electric Co.'s TW-50CS1, TWC-50CS Series, Cooper/Crouse-Hinds' 1650, 660S Series, Raco Inc.'s 2912, 2922 Series, Steel City/T & B Corp.'s TC-711 Series, Thomas & Betts Corp.'s 5120, 5123 Series or approved equal.

6. Flexible Metal Conduit Connectors: Arlington Industries Inc.'s Saddle-Grip, OZ/Gedney Co.'s C-8T, 24-34T, ACV-50T Series, Thomas & Betts Corp.'s Nylon Insulated Tite-Bite Series or approved equal.

7. Liquid-tight Flexible Metal Conduit Connectors: Steel, malleable iron, zinc electroplate, insulated throat; Appleton Electric Co.'s STB Series, Cooper/Crouse-Hinds' LTB Series, OZ/Gedney Co.'s 4Q-50T Series, Raco Inc.'s 3512 Series, Steel City/T & B Corp.'s LT-701 Series, Thomas & Betts Corp.'s 5332 Series or approved equal.

E. Conduit Bodies (Threaded):

1. Malleable Iron/Zinc Electroplate: Zinc electroplate malleable iron or cast iron alloy bodies with zinc electroplate steel covers; Appleton Electric Co.'s Unilets, Cooper/Crouse-Hinds' Condulets, OZ/Gedney Co.'s Conduit Bodies or approved equal.

F. Expansion Fittings:

1. Malleable Iron, Zinc Electroplate Finish: Appleton Electric Co.'s, XJ,OZ/Gedney Co.'s AX (TX for EMT), Eaton Cooper Industries with external bonding jumper or approved equal.

2. Electrogalvanized Steel: Cooper/Crouse-Hinds' XJG (XJG-EMT for EMT), Appleton Electric JBEW Series, Schneider Electric with internal grounding or approved equal.

G. Deflection Fittings: Appleton Electric Co.'s DF, Cooper/Crouse-Hinds' XD, OZ/Gedney Co.'s Type DX or approved equal.

H. Hazardous Location Fittings:

1. Sealing Fittings: Appleton Electric Co.'s EYS, ESU w/Kwiko sealing compound and fiber filler, Cooper/Crouse-Hinds' EYS, EZS w/Chico A sealing compound and Chico X filler, OZ/Gedney Co.'s EY, EYA with EYC sealing compound and EYF damming fiber or approved equal.

2. Other Type Fittings: As required to suit installation requirements, by Appleton Electric Co., Cooper/Crouse-Hinds, OZ/Gedney Co or approved equal.

I. Sealant for Raceways Exposed to Different Temperatures: Sealing compounds and accessories to suit installation; Appleton Electric Co.'s DUC, or Kwiko Sealing Compound with fiber filler, Cooper/Crouse-Hinds' Chico A Sealing Compound with Chico X fiber, Electrical Products Division 3M Scotch products, OZ Gedney Co.'s DUX or EYC sealing compound with EYF damming fiber, Thomas & Betts Corp.'s Blackburn DX or approved equal.

J. Pulling-In-Line For Installation in Spare and Empty Raceways: Polypropylene monofilament utility line; Greenlee Textron Inc.'s Poly Line 430, 431, Ideal Industries Powr-Fish Pull-Line 31-340 Series, Gardner Bender Pl232b Gardner Bender Poly-Pull™ Pull Line, 6500' Pl232b or approved equal.

PART 3 EXECUTION

3.1 RACEWAY INSTALLATION - GENERAL

A. Number of Raceways: Do not change number of raceways to less than the number indicated on the drawings.

1. Each raceway shall enclose one 3 phase circuit group (i.e., Ph A, B, C, N) unless otherwise indicated on the drawings.

B. Number of Raceways: Do not change number of raceways to less than the number indicated on the drawings.

C. Raceways for Future Use (Spare Raceways and Empty Raceways): Draw fish tape through raceways in the presence of the Resident Engineer to show that the raceway is clear of obstructions.

1. Leave a pulling-in line in each spare and empty raceway.

D. Conduit Installed Concealed:

1. Install conduit concealed unless otherwise indicated on the drawings.

2. New Construction:

a. Run conduit in the ceilings, walls, and partitions.

b. Conduit may not be installed in concrete floor slab (concrete slabs that are both ceilings and floors shall be treated as floor slabs).

c. Install conduit in concrete slabs, under slabs on grade, or under slabs above finished ceilings where

indicated on the drawings. Concrete slabs that are both ceilings and floors shall be treated as floor slabs.

1) Conduit in Slab: Run 1/2 and 3/4 inch conduit in the slab where placement of reinforcement and slab thickness is sufficient to allow 1-1/2 inches of concrete cover over conduit, otherwise run conduit under slab. Run conduit one inch and larger in the slab in the specific location(s) where it is indicated on the drawing to be run in the slab, otherwise run conduit under slab.

a) Run conduit under reinforcement where reinforcement is in upper portion or middle of slab.

b) Run conduit over reinforcement where reinforcement is in lower portion of slab.

c) Run conduit between reinforcement where reinforcement is in upper and lower portions of slab.

d) Separate parallel conduits minimum of 2 inches so that each conduit will be enveloped in concrete.

e) Pass conduit over steel beams, if any, parallel with the reinforcement.

f) Tie down conduit to avoid movement during placement of concrete.

g) Demonstrate to the Engineer that conduit has been placed to allow minimum of 1-1/2 inches of concrete cover.

2) Conduit Under Slab on Grade:

a) Run conduit under vapor barrier, if any.

b) Install equipment grounding conductor in each conduit. Bond at boxes and equipment to which conduit is connected.

3) Conduit Under Slab, Above Finished Ceiling:

a) Attach conduit to bottom of slab or structure supporting the slab.

b) Firestop through-penetrations of the slab.

3. If any portions of the conduit system cannot be installed concealed due to conditions encountered in the building, report such conditions and await approval in writing before proceeding.

E. Conduits Penetrating Concrete Floor Slabs (Concrete slabs that are both ceilings and floors shall be treated as floor slabs):

1. Provide a minimum of 2 inches between conduits that vertically

penetrate elevated concrete slabs.

2. Provide firestopping and spray on fireproofing at locations where conduits penetrate surface of floor slab and slab is part of fire rating required for construction.

F. Conduit Installed Exposed:

1. Install conduit exposed where indicated on the drawings.

2. Install conduit tight to the surface of the building construction unless otherwise indicated or directed.

3. Install vertical runs perpendicular to the floor.

4. Install runs on the ceiling perpendicular or parallel to the walls.

5. Install horizontal runs parallel to the floor.

6. Do not run conduits near heating pipes.

7. Installation of conduit directly on the floor will not be permitted.

G. Conduit Size: Not smaller than 3/4 inch electrical trade size. Where type FEP, THHN, THWN, THWN-2, XHH, XHHW, or XHHW-2 conductors are specified for use under Section 16121, the minimum allowable conduit size for new Work shall be based on Type THW conductors.

H. Conduit Bends: For 3/4 inch conduits, bends may be made with manual benders. For all conduit sizes larger than 3/4 inch, manufactured or field fabricated offsets or bends may be used. Make field fabricated offsets or bends with an approved hydraulic bender.

3.2 RACEWAY INSTALLATION - SPECIAL AREAS

A. Raceways Exposed to Different Temperatures: Where portions of an interior raceway system are exposed to widely different temperatures, seal interior and exterior of raceway to prevent circulation of air from a warmer to a colder section through the raceway installation.

1. Heated Areas to Unheated Areas: After conductors are installed, seal interior of the raceway at the nearest conduit body, outlet or junction box in the heated area adjoining the unheated area.

B. Conduit in Waterproofed Floors: Install conduit runs in waterproof floors to avoid penetrating the waterproofing. Avoid penetration of waterproofing with conduit risers so far as practicable.

1. Where it is necessary to puncture the waterproofing for a conduit riser, install a standard weight steel pipe sleeve extending one inch above the finished floor level. Flash the steel pipe sleeve to the waterproofing with 16 ounce copper. Construct the flashing with a copper tube extending the full height of the sleeve, soldered to a copper base extending 6 inches in all directions from the sleeve.

2. The flashing will be integrated into the waterproofing by the Construction Contractor. Provide solid cast brass floor plates with chromium finish where pipe sleeves are exposed in rooms.

C. Conduit in Hazardous Areas: Install Work in hazardous areas in accordance with the NFPA 70. The hazardous areas and the degree of hazard for each area are indicated on the drawings.

1. Install sealing fittings in concealed conduit runs in a recessed box with blank face plate to match other face plates in the area.

3.3 RACEWAY SCHEDULE

A. Rigid Ferrous Metal Conduit: Install in all locations unless otherwise specified or indicated on the drawings.

B. Liquid-tight Flexible Metal Conduit: Install equipment grounding conductor in liquid-tight flexible metal conduit and bond at each box or equipment to which conduit is connected:

1. Use 1 to 3 feet of liquid-tight flexible metal conduit (UL listed and marked suitable for the installation's temperature and environmental conditions) for final conduit connection to:

a. Motors with weather-protected or totally enclosed housings.

b. Equipment subject to vibration (damp and wet locations).

c. Equipment requiring flexible connection for adjustment or alignment (damp and wet locations).

C. Plastic Coated Rigid Metal Conduit:

D. Wireways: May be used indoors in dry locations for exposed raceway between grouped, wall mounted equipment.

3.4 FITTINGS AND ACCESSORIES SCHEDULE

A. General:

1. Use fittings and accessories that have a temperature rating equal to, or higher than the temperature rating of the conductors to be installed within the raceway.

2. Use zinc electroplate or hot dipped galvanized steel/malleable iron or cast iron alloy fittings and accessories in conjunction with ferrous raceways in dry and damp locations unless otherwise specified or indicated on the drawings.

3. Use insulated grounding bushings or grounding wedges on ends of conduit for terminating and bonding equipment grounding conductors, when required, if cabinet or boxes are not equipped with grounding/bonding screws or lugs.

4. Use caps or plugs to seal ends of conduits until wiring is installed to exclude foreign material.

5. Use insulated grounding bushings on the ends of conduits that are not directly connected to the enclosure, such as stub-ups under equipment, etc., and bond between bushings and enclosure with equipment grounding conductor.

6. Use expansion fittings where raceways cross expansion joints (exposed, concealed, buried).

7. Use deflection fittings where raceways cross expansion joints that move in more than one plane.

8. Use 2 locknuts and an insulated bushing on end of each conduit entering sheet metal cabinet or box in dry or damp locations.

   a. Plastic bushing may be used on 1/2 and 3/4 inch conduit in lieu of insulated bushing.

   b. Terminate conduit ends within cabinet/box at the same level.

B. For Rigid and Intermediate Metal Conduit: Use threaded fittings and accessories. Use 3 piece conduit coupling where neither piece of conduit can be rotated.

C. For Electrical Metallic Tubing: Use compression type connectors and couplings.

D. For Flexible Metal Conduit: Use flexible metal conduit connectors.

E. For Liquid-tight Flexible Metal Conduit: Use liquid-tight connectors.

F. For Rigid Nonmetallic PVC Conduit: Use conduit manufacturer's standard fittings and accessories.

G. For Multioutlet Assembly: Use manufacturer's standard fittings and accessories.

H. For Wireways: Use wireway manufacturer's standard fittings and accessories.

END OF SECTION

SECTION 26 0553 – IDENTIFICATION FOR ELECTRICAL SYSTEMS

PART 1 GENERAL

1.1 SUMMARY

A. Section Includes:

1. Electrical identification materials and devices required to comply with ANSI C2, NFPA 70, OSHA standards, and authorities having jurisdiction.

B. Related Sections:

1. Section 26 05 19 – Low Voltage Electrical Power Conductors and Cables
2. Section 26 05 33 - Raceways and Boxes for Electrical Systems
3. Section 26 24 16 – Panelboards
4. Section 26 27 26 - Wiring Devices
5. Section 26 29 34 - Safety Switches

1.2 REFERENCES

A. American National Standards Institute (ANSI) Publications:

1. ANSI/ASME A13.1 “Scheme for the Identification of Piping Systems”

B. Institute of Electrical and Electronics Engineers (IEEE) Publications:

1. C2 “ASC C2 Eighth Interim Collection of the National Electrical Safety Code”

C. National Fire Protection Association (NFPA) Publications:

1. 70 "National Electric Code"

1.3 SUBMITTALS

A. Submit “Letter of Conformance” indicating specified items selected for use in Project with the following supporting data:

1. Product Data: For each electrical identification product indicated.

1.4 QUALITY ASSURANCE

A. Comply with IEEE C2.

B. Comply with NFPA 70 "National Electric Code”

C. Comply with ANSI A13.1 and NFPA 70 for color-coding.

PART 2 PRODUCTS

2.1 MANUFACTURERS

A. Approved Manufacturers:

1. Brady USA, Inc. (800-541-1686)
2. Panduit corp. (800-777-3300)
3. Seton Identification Products (800-571-2596)

2.2 RACEWAY AND CABLE LABELS

A. Comply with ANSI A13.1, Table 3, for minimum size of letters for legend and for minimum length of color field for each raceway and cable size.

B. Pre-tensioned, Wraparound Plastic Sleeves: Flexible, preprinted, color-coded, acrylic band sized to suit the diameter of the line it identifies and arranged to stay in place by pretensioned gripping action when placed in position.

C. Colored Adhesive Tape: Self-adhesive vinyl tape not less than 3 mils thick by 1 to 2 inches wide.

D. Underground-Line Warning Tape: Permanent, bright-colored, continuous-printed, vinyl tape.

1. Not less than 6 inches wide by 4 mils thick.
2. Compounded for permanent direct-burial service.
3. Embedded continuous metallic strip or core.
4. Printed legend indicating type of underground line.

E. Tape Markers: Vinyl or vinyl-cloth, self-adhesive, wraparound type with preprinted numbers and letters.

F. Aluminum, Wraparound Marker Bands: Bands cut from 0.014-inch thick aluminum sheet, with stamped or embossed legend, and fitted with slots or ears for permanently securing around wire or cable jacket or around groups of conductors.

G. Plasticized Card-Stock Tags: Vinyl cloth with preprinted and field-printed legends. Orange background, unless otherwise indicated, with eyelet for fastener.

H. Aluminum-Faced, Card-Stock Tags: Weather-resistant, 18-point minimum card stock faced on both sides with embossable aluminum sheet, 0.002 inch thick, laminated with moisture- resistant acrylic adhesive, punched for fasteners, and preprinted with legends to suit each application.

2.3 NAMEPLATES AND SIGNS

A. Safety Signs: Comply with 29 CFR, Chapter XVII, Part 1910.145.

B. Engraved Plastic Nameplates and Signs: Engraving stock, melamine plastic laminate, minimum 1/16 inch thick for signs up to 20 sq. in. and 1/8 inch thick for larger sizes.

1. Engraved legend with black letters on white face.
2. Punched or drilled for mechanical fasteners.

C. Baked-Enamel Signs for Interior Use: Preprinted aluminum signs, punched or drilled for fasteners, with colors, legend, and size required for the application. 1/4-inch grommets in corners for mounting.

D. Exterior, Metal-Backed, Butyrate Signs: Weather-resistant, nonfading, preprinted, cellulose- acetate butyrate signs with 0.0396-inch galvanized-steel backing; and with colors, legend, and size required for the application. 1/4-inch grommets in corners for mounting.

E. Fasteners for Nameplates and Signs: Self-tapping, stainless-steel screws or No. 10/32, stainless-steel machine screws with nuts and flat and lock washers.

2.4 MISCELLANEOUS IDENTIFICATION PRODUCTS

A. Cable Ties: Fungus-inert, self-extinguishing, one-piece, self-locking, Type 6/6 nylon cable ties.

1. Minimum Width: 3/16 inch.
2. Tensile Strength: 50 lb minimum.
3. Temperature Range: Minus 40 to plus 185 deg F.
4. Color: According to color-coding.

PART 3 EXECUTION

3.1 INSTALLATION

A. Identification Materials and Devices: Install at locations for most convenient viewing without interference with operation and maintenance of equipment.

B. Lettering, Colors, and Graphics: Coordinate names, abbreviations, colors, and other designations with corresponding designations in the Contract Documents or with those required by codes and standards. Use consistent designations throughout Project.

C. Sequence of Work: If identification is applied to surfaces that require finish, install identification after completing finish work.

D. Self-Adhesive Identification Products: Clean surfaces before applying.

E. Circuits with More Than 600 V: Identify raceway and cable with "DANGER--HIGH VOLTAGE" in black letters 2 inches high, stenciled with paint at 10-foot intervals over a continuous, painted orange background. Identify the following:

1. Entire floor area directly above conduits running beneath and within 12 inches of a basement or ground floor that is in contact with earth or is framed above unexcavated space.
2. Wall surfaces directly external to conduits concealed within wall.
3. All accessible surfaces of concrete envelope around conduits in vertical shafts, exposed in the building, or concealed above suspended ceilings.
4. Entire surface of exposed conduits.

F. Color Banding Raceways and Exposed Cables: Band exposed and accessible raceways of the systems listed below:

1. Bands: Pre-tensioned, wraparound plastic sleeves; colored adhesive tape; or a combination of both. Make each color band 2 inches wide, completely encircling conduit, and place adjacent bands of two-color markings in contact, side by side.
2. Band Locations: At changes in direction, at penetrations of walls and floors, at 50-foot maximum intervals in straight runs, and at 25-foot maximum intervals in congested areas.
3. Apply the following colors to the systems listed below:
    a. Fire Alarm System: Red.
    b. Fire-Suppression Supervisory and Control System: Red and yellow.

c. Combined Fire Alarm and Security System: Red and blue.

d. Security System: Blue and yellow.

e. Mechanical and Electrical Supervisory System: Green and blue.

f. Telecommunication System: Green and yellow.

G. Caution Labels for Indoor Boxes and Enclosures for Power and Lighting: Install pressure- sensitive, self-adhesive labels identifying system voltage with black letters on orange background. Install on exterior of door or cover.

H. Circuit Identification Labels on Boxes: Install labels externally.

1. Exposed Boxes: Pressure-sensitive, self-adhesive plastic label on cover.

2. Concealed Boxes: Plasticized card-stock tags.

3. Labeling Legend: Permanent, waterproof listing of panel and circuit number or equivalent.

I. Paths of Underground Electrical Lines: During trench backfilling, for exterior underground power, control, signal, and communication lines, install continuous underground plastic line marker located directly above line at 6 to 8 inches below finished grade. Where width of multiple lines installed in a common trench or concrete envelope does not exceed 16 inches overall, use a single line marker. Install line marker for underground wiring, both direct-buried cables and cables in raceway.

J. Secondary Service, Feeder, and Branch-Circuit Conductors: Color-code throughout the secondary electrical system.

1. Color-code 208/120-V system as follows:

a. Phase A: Black.

b. Phase B: Red.

c. Phase C: Blue.

d. Neutral: White.

e. Ground: Green.

2. Color-code 480/277-V system as follows:

a. Phase A: Yellow.

b. Phase B: Brown.

c. Phase C: Orange.

d. Neutral: White with a colored stripe or gray.

e. Ground: Green.

3. Factory apply color the entire length of conductors, except the following field-applied, color-coding methods may be used instead of factory-coded wire for sizes larger than No. 10 AWG:

a. Colored, pressure-sensitive plastic tape in half-lapped turns for a distance of 6 inches from terminal points and in boxes where splices or taps are made. Apply last two turns of tape with no tension to prevent possible unwinding. Use 1-inch wide tape in colors specified. Adjust tape bands to avoid obscuring cable identification markings.

b. Colored cable ties applied in groups of three ties of specified color to each wire at each terminal or splice point starting 3 inches from the terminal and spaced 3 inches apart. Apply with a special tool or pliers, tighten to a snug fit, and cut off excess length.

K. Power-Circuit Identification: Metal tags or aluminum, wraparound marker bands for cables, feeders, and power circuits in vaults, pull and junction boxes, manholes, and switchboard rooms.

1. Legend: 1/4-inch steel letter and number stamping or embossing with legend corresponding to indicated circuit designations.

2. Tag Fasteners: Nylon cable ties.

3. Band Fasteners: Integral ears.

L. Apply identification to conductors as follows:

1. Conductors to Be Extended in the Future: Indicate source and circuit numbers.

2. Multiple Power or Lighting Circuits in the Same Enclosure: Identify each conductor with source, voltage, circuit number, and phase. Use color-coding to identify circuits' voltage and phase.

3. Multiple Control and Communication Circuits in the Same Enclosure: Identify each conductor by its system and circuit designation. Use a consistent system of tags, color- coding, or cable marking tape.

M. Apply warning, caution, and instruction signs as follows:

1. Warnings, Cautions, and Instructions: Install to ensure safe operation and maintenance of electrical systems and of items to which they connect. Install engraved plastic- laminated instruction signs with approved legend where instructions are needed for system or equipment operation. Install metal-backed butyrate signs for outdoor items.

2. Emergency Operation: Install engraved laminated signs with white legend on red background with minimum 3/8-inch high lettering for emergency instructions on power transfer, load shedding, and other emergency operations.

N. Equipment Identification Labels: Engraved plastic laminate. Install on each unit of equipment, including central or master unit of each system. This includes power, lighting, communication, signal, and alarm systems, unless units are specified with their own self-explanatory identification. Unless otherwise indicated, provide a single line of text with 1/2-inch high lettering on 1-1/2-inch high label; where two lines of text are required, use labels 2 inches high. Use white lettering on black field. Apply labels for each unit of the following categories of equipment using mechanical fasteners:

1. Panelboards, electrical cabinets, and enclosures.

2. Access doors and panels for concealed electrical items.

3. Electrical switchgear and switchboards.

4. Emergency system boxes and enclosures.

5. Disconnect switches.

6. Enclosed circuit breakers.

7. Motor starters.

8. Push-button stations.
9. Power transfer equipment.
10. Contactors.
11. Remote-controlled switches.
12. Dimmers.
13. Control devices.
14. Transformers.
15. Telephone switching equipment.
16. Fire alarm master station or control panel.
17. Security-monitoring master station or control panel.

END OF SECTION

SECTION 26 0923 – LIGHTING CONTROL DEVICES

PART 1 GENERAL

1.1 SUBMITTALS

A. Submittals Package: Submit the shop drawings, and the product data specified below at the same time as a package.

B. Shop Drawings: Wiring and/or schematic diagram of the control circuits as proposed to be installed (standard diagrams will not be accepted.

C. Product Data: Catalog sheets, specifications and installation instructions.

PART 2 PRODUCTS

2.1 TIME CONTROLS

A. Astronomic Dial: Intermatic Inc.'s V45000CR Series, Paragon Electric Co.'s 4213-SZ Series, Tork Inc.'s ZL Series or approved equal, having:

1. Surface mounted NEMA 3 enclosure, with lockable hasp.
2. Day omitting device, with 3 omitting screws.
3. 120 volt operation, DPST, minimum rating 40A per pole.
4. Mechanical reserve power feature to keep dial on time for minimum of 10 hours in event of power failure.

PART 3 EXECUTION

3.1 INSTALLATION

A. Install lighting controls in accordance with manufacturers printed instructions unless otherwise indicated.

B. Wire circuit so that lighting is:

1. On at dusk by time control.
2. Off at dawn by time control.

END OF SECTION

SECTION 26 2416 – PANELBOARDS

PART 1 GENERAL

1.1 REFERENCES

A. NEMA, UL.

1.2 SUBMITTALS

A. Submittal Packages: Submit the shop drawings, product data, and the quality control submittals specified below at the same time as a package.

B. Shop Drawings; include the following for each panelboard:

1. Cabinet and gutter size.
2. Voltage and current rating.
3. Panelboard short circuit rating. Indicate if rating is Fully Rated Equipment Rating, or where acceptable, UL listed Integrated Equipment Short Circuit Rating.
4. Circuit breaker enumeration (frame, ATE, poles, I.C.).
    a. Indicate if circuit breakers are suitable for the panelboards Fully Rated Equipment Rating, or where acceptable, are series connected devices which have been test verified and listed with UL (include documentation proving the compatibility of the proposed circuit breaker combinations). Circuit breakers do not have to be listed as series connected devices when all of the circuit breaker interrupting ratings are equal to, or greater than, the short circuit rating of the panelboard.
5. When indicated on the panelboard schedule, a coordinated selective scheme between the main circuit breaker and branch/feeder circuit breakers so that under fault conditions the branch/feeder circuit breaker clears the fault while the main circuit breaker remains closed.
6. Accessories.

C. Product Data:

1. Catalog sheets, specifications and installation instructions.
2. Bill of materials.

D. Quality Control Submittals:

1. Company Field Advisor Data: Include:
    a. Name, business address and telephone number of Company Field Advisor secured for the required services.
    b. Certified statement from the Company listing the qualifications of the Company Field Advisor.
    c. Services and each product for which authorization is given by the Company listed specifically for this project.

E. Contract Closeout Submittals:

1. System acceptance test report.
2. Certificate: Affidavit, signed by the Company Field Advisor and notarized, certifying that the system meets the contract requirements and is operating properly.
3. Operation and Maintenance Data: Deliver 2 copies of the O&M datafor the installed products to the Engineer.

1.3 QUALITY ASSURANCE

A. Company Field Advisor: Secure the services of a Company Field Advisor from the manufacturer of the programmable solid state circuit breakers for a minimum of 8 working hours for the following:

1. Render advice regarding final adjustment and programming of the circuit breakers.
2. Witness final system test and then certify that the circuit breakers are installed in accordance with the contract documents and are operating properly.
3. Provide instruction for facility personnel on the operation and maintenance of the circuit breakers (minimum of two 1 hour sessions).
4. Explain available service programs to facility supervisory personnel for their consideration.

PART 2: PRODUCTS

2.1 PANELBOARDS

A. As produced by General Electric Co., Square D Co., Cutler-Hammer/Eaton Corp., Challenger Electrical Equipment Corp., Siemens/ITE, Westinghouse Electric Corp. or approved equal having:

1. Flush or surface type cabinets as indicated on the drawings.
2. Increased gutter space for gutter taps, sub-feed wiring, through-feed wiring, oversize lugs.
3. UL label "SUITABLE FOR USE AS SERVICE EQUIPMENT" where used as service equipment.
    a. Where indicated, equip panelboards used as service equipment with secondary surge arresters; GE's Tranquell Series, Joslyn's Mfr. Co.'s Surge Tec Series, Intermatic Incorp.'s AG2401 or AG6503, Square D Co.'s SDSA 1175 or SDSA 3650 or approved equal to suit system primary (transformer size, available current) and secondary characteristics.
4. Door-In-Door and one piece trim. Doors fastened to trim with or continuous hinges. Trim fastened to cabinet with devices having provision for trim adjustment.
5. Yale No. 511S, 721DR-26 Olymous Lock Inc, 3310-24/SN Sugatsune America Inc., or approved equal locks with brass cylinder rosette, blind fastened from inside of door. 2 No. 47 keys with each lock (Exception: Not more than 7 keys, total).

6. Door lock. 2 keys with each lock (Exception: Not more than 7 keys, total).
7. Solid copper bus bars rated 1000amps/in2. Ampere rating of bus bars not less than frame size of main circuit breaker.
8. Full capacity copper neutral bus in panelboards where neutrals are required.
9. Copper equipment grounding bus in panelboards where equipment grounding conductors are required.
10. Sections designated "space" or "provision for future breaker" equipped to accept future circuit breakers.
11. Lock on devices for exit light, fire alarm, stair well circuits.
12. Provisions for padlocking circuit breaker handle in OFF position where indicated.
13. Directory.
14. Remote control switches where indicated. Automatic Switch Co.'s ASCO 920 (225A max.), ASCO 911 (2000A max.), Zenith Controls Inc.'s MVP (225A max.), ZMH (1200A max.) or approved equal with:
    a. 120 volt control circuit including transformer and fuses.
    b. Hand-off-auto (HOA) switch, relays, and accessories when used with 2 wire control devices. Mount HOA switch and relays in NEMA 1 enclosure adjacent to panelboard. Connect HOA switch and relays into the control circuit of each automatically operated remote control switch to allow selection of operating mode. Include nameplate indicating purpose of HOA switch and load controlled.
15. Short circuit rating not less than indicated on panelboard schedule. Furnish panelboards having Fully Rated Equipment Rating (the short circuit rating of the panelboard is equal to the lowest interrupting rating of any device installed in the panelboard). Exception:
    a. Where indicated to be acceptable on panelboard schedule, panelboard having UL listed Integrated Equipment Short Circuit Rating may be used.
16. Molded case, bolt-on circuit breakers:
    a. Mounting: Individually mounted main circuit breaker (when MCB is required), and group mounted branch/feeder circuit breakers to accommodate the circuit breaker style and panelboard construction.
    b. Components: See panelboard schedule for specific components required for each circuit breaker. In addition to the specific components, equip each circuit breaker with additional components as required to achieve a coordinated selective scheme between the main circuit breaker and the branch/feeder circuit breakers when indicated on the panelboard schedule that a coordinated selective scheme is required.
    c. Single pole 15 ATE and 20 ATE circuit breakers marked SWD where used as switches.
    d. Single pole and two pole 15, 20, and 30 ATE circuit breakers rated for

high intensity discharge lighting loads when applicable.

2.2 NAMEPLATES

A. General: Precision engrave letters and numbers with uniform margins, character size minimum 3/16 inch high.

1. Phenolic: Two color laminated engravers stock, 1/16 inch minimum thickness, machine engraved to expose inner core color (white).

2. Aluminum: Standard aluminum alloy plate stock, minimum .032 inches thick, engraved areas enamel filled or background enameled with natural aluminum engraved characters.

3. Materials for Outdoor Applications: As recommended by nameplate manufacturer to suit environmental conditions.

PART 3 EXECUTION

3.1 INSTALLATION

A. Install panelboards in accordance with NEMA Publication No. PB1.1 "General Instructions for Proper Installation, Operation and Maintenance of Panelboards Rated 600 Volts or Less".

1. Set/program the circuit breakers.

B. Flush Cabinets: Set flush cabinets so that edges will be flush with the finished wall line. Where space will not permit flush type cabinets to be set entirely in the wall, set cabinet as nearly flush as possible, and cover the protruding sides with the trim extending over the exposed sides of the cabinet and back to the finished wall line.

C. Directory: Indicate on typewritten directory the equipment controlled by each circuit breaker, and size of feeder servicing panelboard. For power panelboards also include ATE rating and feeder size for each breaker.

D. Identification:

1. Use nameplates, or stencil on front of each panelboard with white paint, "LP-1, PP-1, etc." in 1/2 inch lettering corresponding to panelboard designations on the drawings, and electrical parameters (phase, wire, voltage).

2. Install a nameplate on each panelboard which explains the means of identifying each ungrounded system conductor by phase and system. Examples of nameplate statements:

a. Identification of 120/208 Volt Circuit Conductors:

2 wire circuit - white*, black.

3 wire circuit - white*, black, red.

4 wire circuit - white*, black, red, blue.

*White is used only as neutral. Where neutral is not required, black, red, or black, red, blue is used for phase to phase circuits.

b. Identification of 277/480 Volt Circuit Conductors:

2 wire circuit - natural gray**, brown.

3 wire circuit - natural gray**, brown, yellow.

4 wire circuit - natural gray**, brown, yellow, orange.

**Natural gray is used only as neutral. Where neutral is not required, brown, yellow, or brown, yellow, orange is used for phase to phase circuits.

3.2 FIELD QUALITY CONTROL

A. Preliminary System Test:

1. Preparation: Have the Company Field Advisor adjust the completed circuit breakers and then operate them long enough to assure that they are performing properly.
2. Run a preliminary test for the purpose of:
   a. Determining whether the circuit breakers are in a suitable condition to conduct an acceptance test.
   b. Checking instruments and equipment.
   c. Providing instruction to facility personnel.

B. System Acceptance Test:

1. Preparation: Notify the City's Representative at least 3 working days prior to the test so arrangements can be made prior to the test to have a Facility Representative witness the test.
2. Make the following tests:
   a. Test circuit breakers which have ground fault protection in accordance with the approved information sheets and test form.
   b. Test programmable solid state trip devices in accordance with the manufacturer's recommendations.
3. Supply all equipment necessary for system adjustment and testing.
4. Submit written report of test results signed by the Company Field Advisor and the the Engineer. Mount a copy of the final report in a conspicuous location on, or inside, the panelboard door.

END OF SECTION

SECTION 26 2726 – WIRING DEVICES

PART 1 GENERAL

1.1 SUBMITTALS

A. Product Data: Catalog sheets, specifications and installation instructions.

PART 2 PRODUCTS

2.1 SWITCHES

A. Local Switches, Single Pole:

1. 15A, 120/277 V ac; Bryant's 4801, Crouse-Hinds/AH's 1891, General Electric's GE5931-1G, Hubbell's 1201/1101, Leviton's 1201/1101, Pass & Seymour's 15AC1, Woodhead's 1891 or approved equal.
2. 20A, 120/277 V ac; Bryant's 4901, Crouse-Hinds/AH's 1991, General Electric's GE 5951-1G, Hubbell's 1121/1221, Leviton's 1121/1221, Pass & Seymour's 20AC1, Woodhead's 1991 or approved equal.
3. 30A, 120/277 V ac; Bryant's 3001, Crouse-Hinds/AH's 3991, General Electric's GE 5991-1G, Hubbell's 3031, Leviton's 3031, Pass & Seymour's 30AC1 or approved equal.

B. Local Switches, Double Pole:

1. 15A, 120/277 V ac; Bryant's 4802, Crouse-Hinds/AH's 1892, General Electric's GE5932-1G; Hubbell's 1202/1102, Leviton's 1202/1102, Pass & Seymour's 15AC2, Woodhead's 1892 or approved equal.
2. 20A, 120/277 V ac; Bryant's 4902, Crouse-Hinds/AH's 1992, General Electric's GE5952-1G, Hubbell's 1222/1122, Leviton's 1222/1122, Pass & Seymour's 20AC2, Woodhead's 1992 or approved equal.
3. 30A, 120/277 V ac; Bryant's 3002, Crouse-Hinds/AH's 3992, General Electric's GE5992-1G, Leviton's 3032, Pass & Seymour's 30AC2 or approved equal.

C. Local Switches, Three-Way:

1. 15A, 120/277 V ac; Bryant's 4803, Crouse-Hinds/AH 1893, General Electric's GE5933-1, Hubbell's 1203/1103, Leviton's 1203/1103, Pass & Seymour's 15AC3, Woodhead's 1893 or approved equal.
2. 20A, 120/277 V ac; Bryant's 4903, Crouse-Hinds/AH's 1993, General Electric's GE5953-1G, Hubbell's 1223/1123, Leviton's 1223-2/1123-2, Pass & Seymour's 20AC3, Woodhead's 1993 or approved equal.
3. 30A, 120/277 V ac; Bryant's 3003, Crouse-Hinds/AH's 3993, General Electric's GE5993-1G, Leviton's 3033, Pass & Seymour's 30AC3 or approved equal.

D. Local Switches, Four-Way:

1. 15A, 120/277 V ac; Bryant's 4804, Crouse-Hinds/AH's 1894, General Electric's GE5934-1G, Hubbell's 1204/1104, Leviton's 1204-2/1104-2, Pass & Seymour's 15AC4, Woodhead's 1894 or approved equal.

2. 20A, 120/277 V ac; Bryant's 4904, Crouse-Hinds/AH's 1994, General Electric's GE5954-1G, Hubbell's 1224/1124, Leviton's 1224-2/1124-2, Pass & Seymour's 20AC4, Woodhead's 1994 or approved equal.

3. 30A, 120/277 V ac; Crouse-Hinds/AH's 3994, General Electric's GE5994-1G or approved equal.

E. Local Switches, Key-Operated:

1. Similar to toggle type local switches except operated by removable key instead of lever. Furnish 2 keys with each switch.

F. Local Switch with Neon Pilot:

1. 15A, 120/277 V ac; General Electric's GE7945-1, Leviton's 5226, Pass & Seymour's 692 or approved equal.

2. Switch similar to local switches previously specified, with separate neon pilot (requires 2 gang installation).

a. Neon pilot (125 V, 1/25W): Bryant's 48071-R, Crouse-Hinds/AH's 1720-RED, General Electric's GE4218-0, Pass & Seymour's 437 or approved equal.

G. Lighted Toggle Switches:

1. Clear toggle, lighted in on position, 15A, 120 V, single pole; Hubbell's 1201-PLC, Leviton's 1201 PLC or approved equal.

2. Ivory toggle lighted in off position, 15A, 120 V; Bryant's 4801-GLI, Crouse Hines/AH's 1891IL, General Electric's SL112-2G, Hubbell's 1201-IL, Leviton's 1201 LHI, Pass & Seymour's 15AC1ISL or approved equal.

H. Dimmer Switches (Incandescent, 120 V ac):

1. 600 Watts; Lutron's C-600, General Electric's DI-61UL or approved equal.

2. 1000 Watts; Lutron's C-1000 or approved equal.

3. 1500 Watts; Lutron's C-1500 or approved equal.

4. 2000 Watts; Lutron's C-2000 or approved equal.

I. Momentary Contact Switches:

1. Three position, center off, toggle, 15A, 120/277 V ac, single pole; Bryant's 4821, Crouse-Hinds/AH's 1895, General Electric's GE5935-1G, Hubbell's 1556, Leviton's 1256, Pass & Seymour's 1250 or approved equal.

2. Three position, center off, key operated, 15A, 120/277 V ac, single pole; Bryant's 4821-L, Crouse-Hinds/AH's 1895-L, General Electric's GE5935-OLG, Hubbell's 1556-L, Pass & Seymour's 1250-L or approved equal.

3. Momentary contact switch with neon pilot. Switch similar to momentary contact switch previously specified, with separate neon pilot (requires 2 gang installation).

   a. Neon Pilot: 125 V, 1/125W; Bryant's 48071-R, Crouse-Hinds/AH's 1720-RED, General Electric's GE4218-0, Pass & Seymour's 437 or approved equal.

2.2 RECEPTACLES

A. Specification Grade Receptacles:

1. Single receptacle, NEMA 5-15R (15A, 125 V, 2P, 3W); Bryant's 5251, Crouse-Hinds/AH's 5251, General Electric's 5251-1, Hubbell's 5251, Leviton's 5251, Pass & Seymour's 5251 or approved equal.

2. Duplex receptacle, NEMA 5-15R (15A, 125 V, 2P, 3W); Bryant's 5252/5242 , Crouse-Hinds/AH's 5252/5242, General Electric's GEN5252-1, Hubbell's 5252/5242, Leviton's 5252/5242, Pass & Seymour's 5252/5242 or approved equal.

3. Single receptacle, NEMA 5-20R (20A, 125 V, 2P, 3W); Bryant's 5361/5351, Crouse-Hinds/AH's 5361/5351, General Electric's GE4103-1, Hubbell's 5361/5351, Leviton's 5361/5351, Pass & Seymour's 5351 or approved equal.

4. Duplex receptacle, NEMA 5-20R (20A, 125 V, 2P, 3W); Bryant's 5362, Crouse-Hinds/AH's 5352/5342, General Electric's GE5352-1, Hubbell's 5352, Leviton's 5352, Pass & Seymour's 5352 or approved equal.

B. Safety Grounding Receptacles:

1. Duplex receptacle, NEMA 5-15R (15A, 125 V, 2P, 3W); Bryant's SG-62, 8200S, Crouse-Hinds/AH's 6352, General Electric's GE4058-1, Hubbell's SG-62, Leviton's 5262-SG ,Pass & Seymour's SG-62 or approved equal.

C. Electric Clock Receptacles:

1. Single receptacle, NEMA 5-15R (15A, 125 V, 2P, 3W), brass or stainless steel face plate to match hardware; Bryant's 2828-G, 2828-GS, Crouse-Hinds/AH's 5708, General Electric's GE4224-5, Hubbell's 5233, 5235, Leviton's 5261-CH, Pass & Seymour's S3733, S3733-SS or approved equal.

D. Ground Fault Interrupter Receptacles:

1. Duplex receptacle rated 15A (NEMA 5-15R), circuit-ampacity 20A; Bryant's GFR52FT, Crouse-Hinds/AH's GF5242, General Electric's GF5242, Hubbell's GF5252, Leviton's 6599, Pass & Seymour's 1591S, Daniel Woodheads 5252GF or approved equal.

2. Duplex receptacle rated 20A (NEMA 5-20R), circuit ampacity 20A; Bryant's GFR53FT, Crouse-Hind/AH's GF5342, General Electric's GF5342, Hubbell's GF 5352, Leviton's 6899, Pass & Seymour's 2091S, Daniel Woodheads 5352GF or approved equal.

E. Isolated Ground Receptacles:

1. Single receptacle, NEMA 5-15R (15A, 125 V, 2P, 3W); Bryant's 5261-IG, Crouse-Hinds/AH's IG5261, General Electric's GE-8210-IG, Hubbell's IG4710 &, Leviton's 5261-IG, Pass & Seymour's IG5261 or approved equal.

2. Duplex receptacle, NEMA 5-15R (15A, 125 V, 2P, 3W); Bryant's 5262-IG, Crouse-Hinds/AH's IG-5262, General Electric's GE-8200-IG, Hubbell's IG-5262, Leviton's 5262-IG, Pass & Seymour's IG-6200 or approved equal.

3. Single receptacle, NEMA 5-20R (20A, 125 V, 2P, 3W); Bryant's, Crouse-Hinds/AH's, General Electric's GE8310-IG2, Hubbell's, Leviton's, Pass & Seymour's or approved equal.

4. Duplex receptacle, NEMA 5-20R (20A, 125 V, 2P, 3W); Bryant's, Crouse-Hinds/AH's, General Electric's GE8300-IG, Hubbell's, Leviton's, Pass & Seymour's or approved equal.

F. Corrosion Resistant Receptacles:

1. Duplex receptacle, NEMA 5-15R (15A, 125 V, 2P, 3W): Bryant's 5262-CR, Crouse-Hinds/AH's 5262CR, General Electric's GE5262-C, Hubbell's 5262-ILH ,Pass & Seymour's CR6200 or approved equal.

G. Special Purpose Receptacles: Furnish matching nylon, polycarbonate or armored plug with each receptacle. Furnish matching wall plate with each receptacle (.040" brass, Type 302 stainless steel, weatherproof, threaded box type, as required):

1. Type A: NEMA 14-20R (3P, 4W, 20A, 125/250 V, W/G); Crouse-Hinds/AH's 5759, General Electric's 1420, Hubbell's 8410 or approved equal.

2. Type B: NEMA 14-30R (3P, 4W, 30A, 125/250 V, W/G); Bryant's 9430FR, Crouse-Hinds/AH's 5744N, General Electric's GE4191-3, Hubbell's 9430A, Leviton's 278, Pass & Seymour's 3864 or approved equal.

3. Type C: NEMA 14-50R (3P, 4W, 50A, 125/250 V, W/G); Bryant's 9450FR, Crouse-Hinds/AH's 5754N, General Electric's GE4181-3, Hubbell's 9450A, Leviton's 279, Pass & Seymour's 3894 or approved equal.

4. Type D: NEMA 14-60R (3P, 4W, 60A 125/250 V, W/G); Bryant's 9460FR, Crouse-Hinds/AH's 9460N, General Electric's GE4171-3, Hubbell's 9460A, Pass & Seymour's 3871 or approved equal.

5. Type E: NEMA 10-20R (3P, 3W, 20A, 125/250 V); Bryant's 9326, Crouse-Hinds/AH's 9140, General Electric's GE4124-1, Hubbell's 6810, Pass & Seymour's 6810 or approved equal.

6. Type F: NEMA 10-30R (3P, 3W, 30A, 125/250 V); Bryant's 9303, Crouse-Hinds/AH's 9344N, General Electric's GE4132-3, Hubbell's 9350, Leviton's 5207, Pass & Seymour's 3860 or approved equal.

7. Type G: NEMA 10-50R (3P, 3W, 50A, 125/250 V); Bryant's 9306, Crouse-Hinds/AH's 7985N, General Electric's GE4152-3, Hubbell's 7962, Leviton's 5206GR, Pass & Seymour's 3890 or approved equal.

8. Type H: NEMA L5-15R (2P, 3W, 15A, 125 V, W/G); Bryant's 4710, Crouse-Hinds/AH's 4710, General Electric's GL0510, Hubbell's 4710, Pass & Seymour's 4710 or approved equal.

9. Type I: NEMA L5-20R (2P, 3W, 20A 125 V, W/G); Bryant's 70520FR, Crouse-Hinds/AH's 6200, General Electric's GL0520, Hubbell's 2310A, Pass & Seymour's L520-R or approved equal.

10. Type J: NEMA L5-30R (2P, 3W, 30A, 125 V, W/G); Bryant's 70530FR, Crouse-Hinds/AH's 6330, General Electric's GL0530, Hubbell's 2610A, Leviton's 70530-FR, Pass & Seymour's L530-R or approved equal.

11. Type K: NEMA L6-15R (2P, 3W, 15A, 250 V, W/G); Bryant's 70615FR, Crouse-Hinds/AH's 6560, General Electric's GL0610, Hubbell's 4560, Leviton's 70615FR, Pass & Seymour's 4560 or approved equal.

12. Type L: NEMA L6-20R (2P, 3W, 20A, 250 V, W/G); Bryant's 70620FR, Crouse-Hinds/AH's 6210, General Electric's GL0620, Hubbell's 2320A, Leviton's 70620-FR, or Pass & Seymour's L620-R, Slater's L620R or approved equal.

13. Type M: NEMA L6-30R (2P, 3W, 30A, 250 V, W/G); Bryant's 70630FR, Crouse-Hinds/AH's 6340, General Electric's GL0630, Hubbell's 2620, Pass & Seymour's L630-R or approved equal.

14. Other Types: As produced by Bryant, Crouse-Hinds/AH, General Electric, Hubbell, Pass & Seymour or approved equal. NEMA configuration and ratings to suit requirements or approved equal.

2.3 WALL PLATES

A. Stainless Steel Wall Plates: Type 302 stainless steel with satin finish; Bryant's 93 Series, Crouse-Hinds/AH's 93_Series, General Electric's 93 Series, Hubbell's 93 Series, Leviton's 910-40 Series, Pass & Seymour's 93 Series or approved equal.

B. Weatherproof Covers: Crouse-Hinds WLRS, WLRD, Hubbell's 52, 74 Series, Pass & Seymour's 45 Series or approved equal.

C. Covers for Threaded Type Boxes: Stamped sheet steel, gasketed device covers as produced by Hoffman Co, Crouse-Hinds Co., OZ/Gedney, Co or approved equal.

2.4 NAMEPLATES

A. Phenolic Type: Standard phenolic nameplates with 3/16 inch minimum size lettering engraved thereon.

B. Embossed Aluminum: Standard stamped or embossed aluminum tags, 3/16 inch minimum size lettering, as produced by Seton Name Plate Corp., Tech Products Inc, MGC Metal Grafix, American Nameplate or approved equal.

2.5 OCCUPANCY SENSOR

A. Passive Infrared (PIR) Line voltage ceiling mounted lighting occupancy sensor with built in daylight harvesting photocell Leviton Model No. 02C15-IDW, Cooper Lighting Solution Model No. OAC-P-1500DMV, Hubbell Control Solution Model No. OMNI-DT or approved equal.

PART 3 EXECUTION

3.1 INSTALLATION

A. Install wiring devices in outlet boxes.

B. Local Switches:

1. Install local switches rated 15A, 120/277 V ac for switches unless otherwise shown on the drawings or specified.

2. Install switches indicated Sa, Sb, Sc, etc, for control of outlets, with corresponding letters on the same circuit.

3. Where more than one switch occurs at same location in a 120 volt system, arrange switches in gangs and cover with one face plate.

4. Install switches in a 277 volt system in separate single boxes if voltage between exposed live metal parts of adjacent switches exceeds 300 volts.

5. Install single and double pole switches so that switch handle is up when switch is in the "On" position.

C. Receptacles:

1. Install Specification Grade receptacles, NEMA 5-15R, 15A, 125 V, 2P, 3W, for duplex receptacles and single receptacles unless otherwise shown on the drawings or specified.

2. Install receptacles with ground pole in the down position.

D. Wall Plates:

1. Install wall plates on all wiring devices in dry locations, with finish to match hardware in each area.

2. Install hospital wall plates on Type HG receptacles.

3. Install blank wall plates on outlet boxes which are for future equipment except telephone outlets.

4. Install 5/8 inch bushed wall plates on telephone outlets.

5. Fasten wall plates with vandal resistant screws in patients' area. Deliver 10 screw keys to the facility.

5. Fasten wall plates with vandal resistant screws in offices and public access areas. For all other locations pop rivet wall plates to the wiring devices. Deliver 10 screw keys to the facility.

E. Weatherproof Covers: Install weatherproof covers on wiring devices in damp and wet locations.

F. Nameplates: Provide phenolic or embossed aluminum nameplate for each special purpose receptacle indicating phase, ampere and voltage rating of the circuit. Attach nameplate with rivets or tamperproof fasteners to wall plate or to wall above receptacle. Wall plates may be engraved with required data in lieu of separate nameplates.

G. Mats: Where flush plates are required over outlet boxes that cannot be set deep enough for the plates to fit closely over the finished wall surfaces, provide oak mats to fill the space between the finished wall surface and the plate.

H. Receptacles On Emergency Circuits: Install red colored receptacles. Engrave faceplates "EMERGENCY" in 3/16 inch high lettering and fill engraving with contrasting color filler material.

END OF SECTION

SECTION 26 5119 – LED INTERIOR LIGHTING

PART 1 GENERAL

1.1 SUBMITTALS

A. Product Data: Catalog sheets, specifications and installation instructions, including:

1. Technical information for each fixture that proves that its ballast meets specified requirements. Include data which proves proposed lamp and ballast combinations do not exceed specified total harmonic distortion.

2. Candlepower distribution curves for each type fixture if different from Company or catalog number specified.

B. Samples: One of each product if requested.

C. Quality Control Submittals:

1. List of Installations for LED Drivers: If brand names other than those specified are proposed for use, furnish the name, address, and telephone number of at least 5 comparable installations which can prove the proposed products have operated satisfactorily for 1 year.

1.2 MAINTENANCE

A. Special Tools:

1. Two tools to remove and install each type and size of fasteners on fixtures equipped with vandal resistant fasteners.

PART 2 PRODUCTS

2.1 COMPONENT DESCRIPTIONS

A. Additional Components: Equip fixtures with the following additional components, as applicable:

1. Plaster frames as required for installation of recessed and semi-recessed fixtures.

2. Safety clips for fixtures installed in grid ceilings.

3. End caps for individually mounted fixtures and end of continuous row fixtures.

4. Finishing collar or combination finishing collar/outlet box for surface mounted fixture used with exposed raceway:

a. Finishing Collar: Same finish and peripheral dimensions as the fixture base, including provisions for mounting, slots to fit over raceway and of depth to cover outlet box and extend back to ceiling or wall.

b. Combination Finishing Collar/Outlet Box: Same finish and peripheral dimensions as the fixture base, gage or thickness of metal as required by National Electrical Code, including provisions for mounting and knockouts or threaded bosses for entrance of raceway.

B. Fixtures are as shown in the fixture schedule on the contract drawings.

PART 3 EXECUTION

3.1 INSTALLATION

A. General: Install fixtures at locations indicated on the drawings.

B. Finishing Collar or Combination Finishing Collar/Outlet Box (Surface Mounted Fixture Used With Exposed Raceway):

1. Provide finishing collar where surface mounted fixture is installed on an exposed raceway outlet box and the fixture base is larger than the outlet box.

2. Provide combination finishing collar/outlet box where surface mounted fixture is not indicated to be installed on an exposed raceway outlet box, but raceway cannot be run directly into fixture body due to fixture design.

END OF SECTION

SECTION 26 53 00 – EXIT LIGHT FIXTURES

PART 1 GENERAL

1.01 SUBMITTALS

A. Product Data: Catalog sheets, specifications and installation instructions.

B. Samples: One of each product if different from Company or catalog number specified.

1.02 QUALITY ASSURANCE

A. List of Installations: If brand names other than those specified are proposed for use, furnish the name, address, and telephone number of at least 5 comparable installations which can prove the proposed products have operated satisfactorily for one year.

1.03 MAINTENANCE

A. Special Tools: Furnish 2 tools to remove and install fasteners on fixtures equipped with vandal resistant fasteners.

PART 2 PRODUCTS

2.01 EXIT LIGHT FIXTURES

A.. Type XEVR: Kenall Mfg. Co.'s MMEX Series, L.C. Doan Co.'s XTL Series having:

1. Red light emitting diodes (L.E.D.s) with protective polycarbonate clear lens to protect L.E.D.s. Fixtures shall not contain optical or light diffusing panels.
2. Battery pack which illuminates LED lamp upon failure of normal source and maintains not less than 60 percent of the initial emergency illumination for a period of at least l-l/2 hours.
3. Directional arrows where indicated on drawings.
4. Vandal resistant fasteners.

PART 3 EXECUTION

3.01 INSTALLATION

A. Install the Work of this Section in accordance with the manufacturer's printed instructions.

END OF SECTION

SECTION 32 31 10 – FENCES AND GATES

PART 1 - GENERAL

1.1 SUMMARY

A. General: Provide fences and gates in accordance with requirements of the Contract Documents.

B. Related Work Specified Elsewhere

1. Concrete footings, walls, retaining walls, curbs, nosings, and other such items required for installation of fences and gates are furnished and installed under "Cast-in-Place Concrete" and project Civil and Landscape Documents.

2. Miscellaneous metal fabrications and accessories for fences and gates are furnished and installed under this Section per the requirements of Section 05 50 00 "Metal Fabrications".

3. Paints and Coatings for fences and gates are furnished and installed under this Section per the requirements of Section 09 90 00 “Paints and Coatings”.

1.2 REFERENCES

A. General: Comply with the applicable provisions of the referenced standards except as modified by governing codes and the Contract Documents. Where a recommendation or suggestion occurs in the referenced standards, such recommendation or suggestion shall be considered mandatory. In the event of conflict between referenced standards, this specification or within themselves, the more stringent standard or requirement shall govern.

1. American Society for Testing and Materials (ASTM)

a. ASTM E894 "Standard Test Method for Anchorage of Permanent Metal Railing Systems and Rails for Buildings "

b. ASTM E935 "Standard Test Methods for Performance of Permanent Metal Railing Systems and Rails for Buildings".

c. ASTM E985 "Standard Specification for Permanent Metal Railing Systems and Rails for Buildings".

d. ASTM E1481 "Standard Terminology of Railing Systems and Rails for Buildings".

2. American Welding Society

a. AWS D1.1 "Structural Welding Code".

b. AWS D1.3 "Structural Welding Code -Sheet Steel".

c. AWS D1.6 “Structural Welding – Stainless Steel”.

3. The Society for Protective Coatings (SSPC): "Steel Structures Painting Manual, Volume 2, Systems and Specifications".

4. Industrial Fasteners Institute (IFC)

   a. "Fastener Standards Book".

1.3 SYSTEM DESCRIPTION

A. Performance Requirements

1. Structural Performance: Provide for fences and gates capable of withstanding design loads of the Work within limits and under conditions indicated and as follows:

   a. Structural requirements shall be as indicated on project structural contract document requirements.

   b. Wind Loading: Design, fabricate and install fences and gates so that the installed fences and gates will withstand project, ASCE-7, and New York City Building Code required inward and outward pressure.

2. Fences and Supports that are simultaneously serving as Guardrails, protecting surfaces 30 inches or more above adjacent grade:

   a. Design and construct to withstand a 200 lbf. load applied at any point, downward or horizontally or the simultaneous application of a lateral force of 40 plf and a vertical force of 50 plf , both applied at the top of the railing; the more stringent requirement governing.

3. Temperature Change Provisions: Design, fabricate and install exterior components to provide for expansion and contraction over an ambient temperature range of 120 deg. F. and a surface temperature range of 180 deg. F. without buckling, undue stress on members or anchors, and other detrimental effects. Fabricate joints that will be exposed to weather in a manner to exclude water, or provide weep holes where water may accumulate.

4. Design Modifications: Make design modifications of work shown only as may be necessary to meet performance requirements and coordinate the work. Variations in details and materials which do not adversely affect appearance, durability or strength shall be submitted to the Engineer for review. Maintain the general design concept without altering profiles and alignments shown.

1.4 SUBMITTALS

A. Product Data: Submit for Engineer’s action. Furnish manufacturer’s literature describing the general properties of each product to be used in the Work. Include, manufacturer’s technical data documenting the primary function, quality and performance of each system and containing specification for each material, load tables, dimension diagrams and installation instructions, or other such information as required by the drawings and specifications.

B. Shop Drawings: Submit for Engineer's action. Provide shop drawings detailing fabrication, installation and erection of fences and gates, including dimensioned plans and elevations, drawn at a minimum scale of 1 in. = 1 ft. and details of sections, connections, anchorage and accessory items, drawn at a minimum scale of 3 in. = 1 ft.. Provide templates for anchors and bolts specified for installation under other Sections.

1. Setting Drawings: Provide setting drawings and templates for the location of fences and gates that are to be embedded in or anchored to concrete or masonry.

C. Samples: Label samples to indicate product, characteristics, and location in the Work. Samples will be reviewed for color and appearance only. Furnish sufficient samples to establish the full range of colors and textures for materials exposed in the finished work. Compliance with other requirements is the responsibility of the Contractor. Provide the following:

1. Fence Post: Two (2) 24 inch lengths each with welded fence post cap fully finished.

2. Fence Panel: Two (2) 24 inch x 24 inch fence panels with perimeter support bars fully finished.

D. Quality Control Submittals: Submit the following for Engineer's information:

1. Reports: copies of welder pre-qualification and other welding procedures in form prescribed in AWS "Structural Welding Code".

1.5 QUALITY ASSURANCE

A. Qualified Installer: The entity performing the work of this section must, within the last five (5) consecutive years prior to the bid opening have successfully completed in a timely fashion at least three (3) projects similar in scope, size and type to the required work.

B. Single Source Responsibility: Obtain each type metal fabrication from one source of a single manufacturer and with sufficient production capacity to produce required units without causing delay to the Work. Obtain accessory products used in conjunction with fences and gates from the fences and gates manufacturer or from sources acceptable to the fences and gates manufacturer. The manufacturer must, for the past five (5) years, have been regularly engaged in the manufacture of material or equipment similar in type to that required for this Project. Such material or equipment provided by the manufacturer must have been in satisfactory service for not less than five (5) years.

C. Regulatory Requirements: Comply with applicable requirements of the laws, codes, ordinances and regulations of Federal, State and Municipal authorities. Obtain necessary approvals from the NYC Building Department.

D. Mock-Up(s):

1. Fence:

a. After sample approval, build eight (8) feet high fence mock-up as detailed on contract documents, provide six (6) foot wide and two (2) post fence section unless otherwise shown. The Work of this mock-up shall be constructed on approval of workmanship, construction, installation, finish and colors of the approved sample fence.

b. Clean mock-ups with materials and techniques intended for use on the Project.

c. Obtain acceptance of visual qualities of mock-up before proceeding with the final work.

E. Pre-Installation Meetings: Prior to the start of the Work, meet at the Project site to review methods and sequence of metal fabrication installation, special details and conditions, standard of workmanship, testing and quality control requirements, job organization and other pertinent topics related to the Work.

1.6 DELIVERY, STORAGE, AND HANDLING

A. Storage and Handling: Store fences and gates items under cover and off the ground. Handle in a manner so as to protect surfaces and to prevent distortion of, and any other type of damage to, fabricated pieces.

PART 2 - PRODUCTS

2.1 METAL MATERIALS

A. Metal Surfaces, General: For fences and gates work which will be exposed to view in the finished work, use only materials which are smooth and free of surface blemishes including pitting, seam marks, roller marks, rolled trade names and roughness. Remove blemishes by grinding, or by welding and grinding, prior to cleaning, treating, and applying surface finishes.

B. Steel

1. Structural Steel Shapes, Plates and Bars: ASTM A36.
2. Rolled Steel Floor Plates: ASTM A786 rolled from plate complying with ASTM A36 or ASTM A283, Grade C or D. Thickness shown for raised pattern safety plates is exclusive of projected pattern.
3. Steel Tubing: ASTM A500; Cold-formed, welded or seamless process. For exterior use and other locations noted, provide hot-dip galvanized (minimum spangle) tubing in accordance with ASTM A153.
4. Steel Pipe: ASTM A53, Type S, Grade B, suitable for close coiling, black finish unless galvanizing is required; standard weight (Schedule 40), unless otherwise indicated or required to satisfy performance criteria.
5. Steel Bars and Bar Size Shapes: ASTM A675, Grade 65, or ASTM A36.
6. Cold Finished Steel Bars: ASTM A108, grade as selected by fabricator.
7. Cold Rolled Carbon Steel Sheets: Commercial quality, or structural quality, complying with ASTM A1008, Grade A, unless another grade is required by design loads, stretcher leveled if exposed, free from scale, pitting or other defects.
8. Galvanized Carbon Steel Sheets: ASTM A653, hot-dip galvanized with G90 coating (minimum spangle), either commercial quality or structural quality, Grade 33, unless another grade is required for design loads.
9. Uncoated, Hot-Rolled Steel Sheet: Commercial quality, or structural quality, complying with ASTM A1011, Grade 30, unless another grade is required by design loads.

C. Stainless Steel

1. ASTM A240; Provide the most suitable austenitic alloy, form and finish required to produce the Work. Provide Type 316 and low carbon 316L for

components to be welded (exterior), type 304 and low carbon 304L for components to be welded (interior), unless otherwise noted.

a. Plate and Sheet: ASTM A480, Stretcher level sheets.

b. Bar Stock and Shapes: ASTM A276.

c. Round, Square and Rectangular Welded Tubing: ASTM A554, Grades MT 316 or MT 316L as standard.

d. Pipe: ASTM A312 (A312M), Grade TP 304.

e. Castings: ASTM A743 (A743M), Grade CF8 or CF20.

D. Castings

Gray Iron Castings: ASTM A48, Class 30 unless another class is indicated or required by structural loads.

1. Malleable Iron Castings: ASTM A47, Grade 32510.

2. Ductile Iron Castings: ASTM A536, grade as selected by fabricator.

3. Abrasive Castings: Metal shown or specified, of suitable alloy for casting and for structural strength, with an evenly distributed exposed surface treatment of not less than 2 oz./ft.^{2} of abrasive granules. Provide electric furnace produced virgin aluminum oxide granules ranging in size from No. 16 to No. 24 and fired into the metal surface.

2.2 FASTENER AND ANCHORAGE MATERIALS

A. Concrete Inserts and Anchors: Anchors and inserts capable of sustaining, without failure, the load imposed within a safety factor of 4 as determined by tested in accordance with ASTM E448. Threaded or wedge type, galvanized ferrous castings, either malleable iron ASTM A47 or cast steel ASTM A27. Provide bolts, washers and shims as required, hot dip galvanized, ASTM A153, Class A.

B. Fasteners and Anchorage Devices: Provide fasteners complying with the requirements of Industrial Fasteners Institute standards. Type, grade, class and style best suited for the respective purpose. Use countersunk flat-head Phillips type machine screws for exposed fasteners, except where Allen head screws are required. Use stainless steel fasteners for exterior construction and for fastening components fabricated of galvanized steel.

1. Provide Type 304 or 316 stainless-steel fasteners for exterior use.

a. Provide Stainless-Steel Bolts and Nuts: Regular hexagon-head annealed stainless-steel bolts, nuts and, where required, flat washers; ASTM F593 for bolts and ASTM F594 for nuts.

2. Expansion Anchors: Anchor bolt and sleeve assembly of material indicated below with capability to sustain, without failure, a load equal to six times the load imposed when installed in unit masonry and equal to four times the load imposed when installed in concrete, as determined by testing per ASTM E488, conducted by a qualified independent testing agency.

a. Material for Exterior Conditions: Alloy Group 1 or 2 stainless-steel

bolts complying with ASTM F593 and nuts complying with ASTM F594.

C. Non-metallic Shrinkage Resistant Grout: Premixed, prepackaged, nonmetallic, noncorrosive, nonstaining, non-gaseous, shrinkage resistant product containing selected silica sands, Portland cement, shrinkage compensating agents, plasticizing and water-reducing agents, complying with CE-CRD-C621 and ASTM C1107 Grade B or Grade C, free of gas-producing or gas-releasing agents, oxidizing catalysts, inorganic accelerators and chlorides. Grout shall be bleed free and attain 7,500 psi compressive strength in 28 days at a fluid consistency of 20 to 30 seconds. Provide one of the following:

1. "Five Star Grout" (U.S. Grout Corp.).
2. "Masterflow 713 Plus" (Chemrex Inc.).
3. "Crystex" (L&M Construction Chemicals, Inc.).
4. "Sure Grip Grout" (Dayton Superior).
5. Or approved equal.

2.3 PAINT MATERIALS

A. Paint: Provide primer and finish paint as supplied by a single manufacturer for the entire project.

1. Exterior Metal Primer: Compatible with finish coats of paint; shop apply primer to the respective dry film mil thickness specified or as recommended by the manufacturer; Provide one of the following:
   a. "Hi-Build Epoxoline II Series N69" (Tnemec Co. Inc.); 4.0 - 6.0 mils (100µm -150µm) d.f.t.
   b. "Carboguard 888 Series" (Carboline Co.); 4.0 - 6.0 mils (100µm - 150µm) d.f.t.
   c. “Interseal 670HS (International Paint), 4.0-8.0 mils (100µm - 200µm) min d.f.t.
   d. Or approved equal.
2. Finish Paint for Exterior Exposed Metals: Color as selected by the Engineer. Shop finish paint apply to the fullest extent possible, respective dry film mil thickness specified or as recommended by the manufacturer; one of the following:
   a. ""Carbothane 133 Series/833" (Carboline Co.). 3.0 - 5.0 mils (75µm -125µm) d.f.t.
   b. "Endura-Shield II 1075" (Tnemec Co. Inc.); 3.0 - 5.0 mils (75µm - 125µm) d.f.t.
   c. “Interthane 870UHS” (International Paint), 5.0- 8.0 mils (125µm - 200µm) min d.f.t.
   d. Or approved equal.
3. Galvanizing Repair Paint: Zinc rich paint for repairing galvanized surfaces and field welds complying with requirements of ASTM A780. Thickness of applied galvanizing repair paint shall be not less than coating thickness

required by ASTM A123 or ASTM A153 as applicable.

4. Dielectric Separator: Cold applied, asphalt emulsion type complying with ASTM D1187, non-sagging, resistant to severe corrosion conditions; applied in two coats for an overall minimum dry film thickness of 25 mils (625µm) or heavy coating of epoxy paint in minimum 2.0 mils (50µm) dry film.

2.4 FABRICATION

A. Supplementary Parts: Include supplementary parts necessary to complete fences and gates work though not definitely shown or specified. Such parts include, but are not limited to, interface components necessary for the installation or anchorage to Work.

B. Verification of Measurements and Dimensions and Coordination and Schedule of Work: Verify measurements and dimensions at the job site and cooperate in the coordination and scheduling of the work of this Section with the work of related trades (with particular attention given to the installation of items embedded in concrete and masonry).

C. Formation of Exposed Work: Form exposed work true to line and level with accurate angles and surfaces and straight sharp edges. Ease exposed edges to a radius of approximately 1/32 in., unless otherwise shown. Form bent metal corners to smallest radius possible without causing grain separation or otherwise impairing work.

D. Formation of Exposed Connections: Form exposed connections with hairline joints, flush and smooth; using concealed fasteners where possible. Exposed threaded portion of bolts and screws shall be cut off flush with adjacent metal. Cut, drill, punch and tap as required for the installation and attachment of other work to fences and gates work. Shear and punch metals cleanly and accurately. Remove burrs. Remove sharp or rough areas on exposed traffic surfaces.

E. Formation of Metal Work: Form metal work built in with concrete or masonry for anchorage, or provide suitable anchors, expansion shields, or other anchoring devices shown or required to provide support for intended use. Furnish metal work in ample time for setting and securing in place.

F. Procedures for Joints and Welds: Make joints as strong and rigid as adjoining sections. Make welds continuous along entire line of contact, except where spot welding is indicated. Grind exposed welds flush and smooth to match and blend with adjoining surfaces. Welded connections may be used where bolted connections are shown. Fabricate joints exposed to weather in a manner to exclude water, or provide weep holes where water may accumulate.

1. Make up threaded connections tight so that threads are entirely concealed. Shoulder and head, dowel and pin abutting bars. Provide bolt and screw heads flat and countersunk in exposed work. Carefully machine, fit and secure removable members by means of Allen-head set screws of proper size and spacing.

G. Galvanizing

1. ASTM A153, Classes A and B, for galvanizing iron and steel hardware.

2. ASTM A123, for galvanizing rolled, pressed and forged steel shapes,

plates, bars, strip 1/8 in. thick and heavier and for assembled steel

3. Items to be Galvanized: Galvanize ferrous metal utilized on the exterior and items embedded in concrete whether interior or exterior, unless otherwise specified. Galvanize other items where specified or shown.

H. Preassembly of Items: Preassemble items in shop to greatest extent possible to minimize field splicing and assembly. Following trial fit, disassemble units only as necessary for shipping and handling. Clearly mark units for reassembly. Provide alignment and splice plates for accurate field fit.

2.5 FENCING AND GATES

A. Provide painted, hot-dipped galvanized steel fences and gates as indicated on drawings.

B. Provide fence panel and gate systems with post/banding/framing/mounting clips/hardware as required by project performance requirements and as follows:

1. Fence and Gate panels:

a. 80% view-blocking “orsogril style” vertical fixed louver bars, 1/16 inch thick by 1-31/32 inch wide, spaced at 1-13/16 inch on center.

b. Cross rods: 5/32 inch diameter rods welded perpendicular to back side of louver bars and spaced at 5-7/32 inches.

c. Framing bars: 1-13/16 inch by 1/4 inch flat bars.

d. Fence and Gate Panel Manufacturer:

Barnett Bates Corp.

1) A & T Iron Works

2) Grating Pacific, Inc.

3) Or equal as approved by Engineer.

2. Posts:

a. As indicated on drawings and as required by project performance requirements.

b. Posts shall be set in concrete footing and/or curbs specified under Cast-in-Place Concrete and project Landscape Documents.

3. Sliding Gate Hardware:

a. As indicated on drawings and as required by project performance requirements.

b. Basis of Design: Subject to compliance with requirements, provide cantilever style sliding gate hardware from DuraGates or comparable product by one of the following:

1) Architectural Iron Designs.

2) T S Distributors.

3) Or approved equal.

c. Cantilevered Sliding Gate Hardware (no ground track or leading

edge wheel):

1) Large carriage monobloc body, Model CGS-350.8G.
2) Large galvanized track, CGS-345G.
3) End wheel for track, CGS-347G.
4) Bottom end cup for track, CGS-346G.
5) Adjustable wall mounting bracket, CG-15G.
6) Upper adjustable end cup, CG-30G.
7) Threaded tie rod for carriage, CG-348-M20.
8) Foundation plate, CG-05G.
9) Stainless steel tension bars, CGI-40
10) Guides: CG-251 and as applicable to project.
11) Locking: As indicated on drawings.
12) Handle: As indicated on drawings.

4. Swing Gate Hardware:
   a. As indicated on drawings and as required by project performance requirements.
   b. Basis of Design: Subject to compliance with requirements, provide swing gate hardware from Tymetal Corp. or comparable product by one of the following:
      1) Architectural Iron Designs.
      2) T S Distributors.
      3) Or approved equal.
   c. Swing Gate Hardware:
      1) Hinges: Maintenance free, sealed bearing industrial grade gate hinges, full depth welded to the gate frame and support posts. Minimum three (3) per gate leaf.
      2) Leading edge wheel: Maintenance free, sealed bearing industrial grade gate wheel. One (1) per gate leaf.
      3) Locking: As indicated on drawings.
      4) Handle: As indicated on drawings.

C. Provide fencing posts and panels formed into the shapes indicated. Joints and connections full-depth welded with welds of proper size and shape; all welds ground smooth.

D. Finish: Provide galvanizing and finish paint.
   1. After fabrication, hot-dip galvanize to 1.25 ounces per square foot minimum zinc coating in accordance with ASTM A123.
   2. Painted finish as specified herein.

2.6 MISCELLANEOUS FRAMING AND SUPPORTS

A. Steel Framing, Subframing and Supports: Provide steel framing and subframing and supports for applications shown and not specifically provided as part of the work of other trades.

1. Material and Finish: Painted, hot-dipped galvanized steel.

B. Steel Weld Plates and Angles: Provide painted, hot-dipped galvanized steel weld plates and angles not specified in other Sections, for items as needed to complete the Work.

C. Items Required for Framing and Support: Furnish bent, or otherwise custom-fabricated, bolts, plates, anchors, hangers, dowels, and other miscellaneous painted, hot-dipped galvanized steel shapes as required for framing and supporting items concrete or other structures. Fabricate items to sizes, shapes, and dimensions required.

D. Fabrication of Miscellaneous Units: Fabricate miscellaneous units to sizes, shapes and profiles shown or, if not shown, of required dimensions to receive adjacent work to be retained by framing. Fabricate from structural steel shapes and plates and steel bars, of welded construction using mitered joints for field connection, except where otherwise shown. Cut, drill and tap units to receive hardware and similar items.

E. Anchors and Inserts: Provide units with integrally welded anchors for casting into concrete or building into masonry. Furnish inserts if units must be installed after concrete is placed.

1. Space anchors 24 in. o.c. and provide minimum anchor units of 1-1/4 in. x 8 in. x 3 in. steel straps, except as otherwise shown.

2.7 SHOP CLEANING AND PAINTING

A. Fences and gates Work: Hot-dip galvanize fences and gates work, except members of stainless steel, unless otherwise specified.

B. Removal Of Oil, Grease And Similar Contaminants: Remove oil, grease and similar contaminants in accordance with SSPC SP-1 "Solvent Cleaning", prior to additional surface preparation specified.

C. Metal Surfaces: Clean and prepare metal surfaces before hot-dip alvanizing. Remove rust and mill scale in accordance with SSPC SP-3 "Power Tool Cleaning", and SSPC SP-6 for exterior exposed ferrous metal.

D. Application of Primer for Painting Prep: Immediately after surface preparation, apply primer in accordance with manufacturer's instructions. Use painting methods which will result in full coverage and dry film thickness specified.

E. Procedures for Primer and Finish Paint: Apply one shop coat of primer to fabricated metal items, except apply 2 coats of primer to surfaces inaccessible after assembly or erection. In addition, apply one shop coat of finish paint to entire surfaces of exterior loose lintels, shelf and relieving angles, dunnage and other items as noted or specified. Use thinners only as specified by the coating manufacturer. The entire coating system shall be as supplied by a single manufacturer.

F. Dissimilar Materials: Separate dissimilar metals with coating of dielectric

separator. Do not extend coating onto exposed or finished surfaces.

2.8 SOURCE QUALITY CONTROL

A. Contractor's Quality Control Responsibilities: Contractor is solely responsible for quality control of the Work.

B. Contractor's Inspection and Testing Agency: Contractor shall employ, at its own expense, an independent full time inspection agency to perform testing and inspection services for metal fabrication work as follows. Non-conforming Work shall be retested and paid for by Contractor.

1. Shop Inspection of Connections: Perform 100% visual inspection at bolted and welded connections in the Work. Examine the size, quality and placement of each connection to verify installation in accordance with Contract Documents and actioned shop drawings.

PART 3 - EXECUTION

3.1 GENERAL

A. Manufacturer's Instructions: Prepare substrates and install the work of this Section, including, components and accessories in accordance with the manufacturer's instructions, except where more stringent requirements are shown or specified, and where project conditions require extra precautions or provisions to ensure satisfactory performance of the Work.

3.2 EXAMINATION

A. Verification of Conditions: Examine the areas to receive the Work and the conditions under which the Work would be performed. Contractor shall remedy conditions detrimental to the proper and timely completion of the Work. Do not proceed until unsatisfactory conditions have been corrected.

3.3 COORDINATION

A. Coordinate installation of anchorages for fences and gates. Furnish setting drawings, templates, and directions for installing anchorages, including sleeves, concrete inserts, anchor bolts, and items with integral anchors, that are to be embedded in concrete or masonry. Deliver such items to Project site in time for installation.

B. Coordinate installation of steel weld plates and angles for casting into concrete that are specified in this Section but required for work of another Section. Deliver such items to Project site in time for installation.

3.4 PREPARATION

A. Substrate Acceptability: Commencement of installation shall constitute acceptance of substrate conditions by the Installer

3.5 INSTALLATION

A. General: Install work as shown, plumb, level and in line with adjacent materials where required. Provide fastenings as indicated on the Drawings, specified herein or as shown on final shop drawings. Fit exposed connections accurately together to form tight hairline joints.

1. Weld Plates and Angles: Coordinate installation of weld plates and angles for casting into concrete construction that are specified in this Section but

required for work of another Section. Deliver such items to Project site in time for installation.

2. Anchorages: Coordinate and furnish anchorages, setting drawings, diagrams, templates, instructions and directions for installation of anchorages, including steel weld plates and angles, concrete inserts, sleeves, anchor bolts and other miscellaneous items having integral anchors that are to be embedded in concrete or masonry construction. Coordinate delivery of such items to the project site. Deliver items which are to be built into the work of other Sections in time so as not to delay the progress of the Work.

B. Procedures for Fastening Metal Work: Except where otherwise specified for a particular item for built-in work, fasten metal work to concrete or solid masonry with embedded anchors or expansion bolts, and to hollow block with toggle bolts. Fastening to wood plugs will not be permitted. Drill holes for bolts to the exact diameter of the bolt. Provide screws threaded full length to the screw head.

C. Field Welding: Comply with AWS Welding Code for procedures related to field welding as related to appearance and quality of welds made and for methods used in correcting welding work. Use materials and methods that minimize distortion and develop strength and corrosion resistance of base metals. Obtain fusion without undercut or overlap. Remove welding flux immediately. At exposed connections, finish exposed welds and surfaces smooth and blended so that no roughness shows after finishing and contour of welded surface matches those adjacent.

D. Protection of Finished Surfaces: Protect finished surfaces against damage during construction and remove protection at time of substantial completion.

E. Dissimilar Materials: Separate dissimilar metals with heavy coating of dielectric separator. Do not extend coating onto exposed or finished surfaces.

F. Fencing and Gates:

1. Install fencing in accordance with manufacturer's installation instructions and approved shop drawings.

2. Install fence posts as shown on the Drawings. Set the posts plumb and level.

3. After the posts have been set in place and properly supported to hold them in line and grade, the annular space shall be filled with non-shrink, cementitious grout. The grout shall be flush with the concrete. After the grout has cured, the Contractor shall install polyurethane sealant around the fence post. Sealant shall be applied in strict accordance with the manufacturer’s instructions, and shall be tooled in as required to maintain drainage from posts.

4. Do not install bent, bowed, or otherwise damaged panels. Remove damaged components from site and replace. Secure fence panels with vandal resistant stainless steel bolts to fence posts after posts have been set in footings.

5. Touch-up damaged finish with paint supplied by manufacturer and matching original coating in color and level of protection.

3.6 FIELD QUALITY CONTROL

A. Contractor's Quality Control Responsibilities: Contractor is solely responsible for quality control of the Work.

B. Connection Identification: Assign each bolting crew and welder an identifying symbol, and require them to mark every connection, so that an inspector may identify the person(s) making each connection.

C. Qualification for Field Welding: Qualify the welding operators and welding procedures in accordance with AWS D1.1 and D1.3 requirements.

D. Field Inspection of Connections: Perform 100% visual inspection at bolted and welded connections in the Work. Examine the size, quality and placement of each connection to verify installation in accordance with Contract Documents and actioned shop drawings.

3.7 ADJUSTING

A. Procedures for Cleaning, Painting and Touch-Up: Immediately after erection, clean field welds, bolted connections, marred and abraded surfaces. Paint and touch-up paint with the specified paint system. Touch up galvanized surfaces in accordance with ASTM A780.

END OF SECTION

(NO TEXT ON THIS PAGE)

PC - PAGES

PARALLEL CONVEYANCE SPECIFICATIONS

CONTRACT SANDRESM1

The specifications in the Parallel Conveyance Specifications (PC-Pages) cover the procurement, fabrication, and construction of the branch interceptor replacement parallel conveyance, construction methods and associated works at East 10th Street as part of the East Side Coastal Resiliency (ESCR) Project.

The PC-Pages supplement the specifications shown on the Specifications and Standards of New York City sheet at the beginning of this Volume 3, which apply to the work except as modified in these Contract Documents.

(NO TEXT ON THIS PAGE)

TABLE OF CONTENTS

Section	Description	Page No.
Section 01 11 00 – Summary of Works – 10th Street Parallel Conveyance		1
Section 01 43 10 – Contractor's Work Quality		3
Section 01 65 00 – Product Delivery, Storage and Handling		9
Section 01 73 12 – Maintenance of OPERATIONs & Construction Staging		13
Section 01 73 17 – Installation of Equipment		18
Section 05 05 23.01 – Welding		24
Section 05 05 23.02 – Miscellaneous Metal Fastenings		32
Section 05 06 00.01 – Schedules for Stainless Steel Work		42
Section 05 50 00 – Metal Fabrications		51
Section 05 52 13.05 – Welded Pipe Railings (Stainless Steel)		58
Section 05 53 01.02 – Stainless Steel Floor Gratings		71
Section 09 91 00 – Painting		75
Section ESCR 50.61 – Sewers in Jacked Steel Sleeves		95

(NO TEXT ON THIS PAGE)

SECTION 01 11 00 – SUMMARY OF WORKS – 10TH STREET PARALLEL CONVEYANCE

PART 1 GENERAL

1.1 SUMMARY

A. This Section provides a summary of the main items of work for the 10th Street Parallel Conveyance (10th St PC). The work consists of furnishing all equipment, superintendence, labor, skill, material and all other items necessary for the construction of the branch interceptor replacement parallel conveyance as part of the East Side Coastal Resiliency Project.

B. This Section Includes:

1. Location and Description of Work
2. Work Included in the Contract
3. Related Sections
4. Site Characterization Reports and Information

1.2 PAYMENT

A. There is no separate payment provision for this Section. The terms of measurement and payment for each principal item of work is provided in the related specification sections.

1.3 RELATED SECTIONS

A. All Contract Documents, including all other specifications sections in this Contract, will apply to this Section.

B. Specifications sections related to the principal items of work covered under this Contract are organized into the following Sections:

1. COMMON WORKS SECTIONS cover general provisions and requirements that are in addition to NYC DEP BWSO Standard Sewer and Water Main Specifications and the NYC DOT Standard Highway Specifications. The COMMON WORKS SECTIONS include:
    a. 01 43 10 – Contractor's Work Quality
    b. 01 65 00 – Product Delivery Requirements
    c. 01 73 12 – Maintenance of Operations and Construction Staging
    d. 01 73 17 – Installation of Equipment
2. APPURTENANT WORKS SECTIONS cover requirements that are in addition to or modify (modifications are noted as such) the NYC DEP BWSO Standard Sewer and Water Main Specifications for appurtenant works required for the complete construction and installation of the principle items of work. APPURTENANT WORKS SECTIONS include:

a. 05 05 23.01 – Welding
    b. 05 05 23.02 – Miscellaneous Metal Fastenings
    c. 05 06 00.01 – Schedules for Stainless Steel Work

d. 05 50 00 – Metal Fabrications

e. 05 52 13.05 – Welded Pipe Railings (Stainless Steel)

f. 05 53 01.02 – Stainless Steel Floor Gratings

g. 09 91 00 - Painting

h. Modification to 50.61 – Sewers in Jacked Steel Sleeves

1.4 REFERENCES

A. Not Used

1.5 DESCRIPTION

A. Location of Work

1. Work performed under this Contract takes place in the sewershed of the East Side Coastal Resiliency Project, including the branch interceptor replacement at East 10th Street and trenchless crossing of the FDR Drive as shown on the Contract Drawings.

B. Work Included in the Contract.

1. Contract Name: SANDRESM1

2. Principal Items of Work: Construction of new 42” branch interceptor to replace existing 24” branch interceptor at East 10th Street including trenchless crossing under FDR Drive.

C. Datum Plane

1. All elevations are in reference to the North American Vertical Datum of 1988 (NAVD88).

END OF SECTION

SECTION 01 43 10 – CONTRACTOR'S WORK QUALITY

PART 1 GENERAL

1.1 SUMMARY

A. Section Includes:

1. Contractor's Quality Assurance / Quality Control Management Plan
2. Defective Work, Equipment or Materials
3. Welding Certification and Welding Inspection
4. Inspection and Testing of Concrete
5. Leakage Tests
6. Contractor's Surveyor

1.2 PAYMENT

A. There is no specific Payment provisions for this Section, and shall be deemed included in the prices bid for the respective Contract items.

1.3 RELATED SECTIONS

A. Section 01 43 10 – Contractor's Work Quality

B. Section 01 43 15 – Witness Shop Testing

1.4 REFERENCES

A. AWS American Welding Society

B. ASME American Society of Mechanical Engineers

C. NYS Steel Construction Manual

1.5 DESCRIPTION

A. Contractor Quality Assurance / Quality Control Plan

1. The Contractor shall establish, execute and submit to the Engineer a Quality Assurance / Quality Control (QA/QC) Management plan for the services and operation of equipment which will be supplied under this Contract. The plan shall provide the Contractor with adequate measures for verification and conformance to defined requirements by its personnel and all subcontractors, fabricators, suppliers, and vendors.

B. Defective Work, Equipment or Materials

1. Any defective or imperfect Work, equipment, or materials furnished by the Contractor which is discovered before the Final Acceptance of the Work, or during the guarantee period, shall be removed immediately even though it may have been overlooked by the Engineer and approved for payment. The Contractor shall repair such defect, without compensation, in a manner satisfactory to the Engineer.

2. Unsuitable materials and equipment may be rejected, notwithstanding that such defective Work, materials and equipment may have been previously overlooked by the Engineer and accepted or approved for payment.

3. If any workmanship, materials or equipment shall be rejected by the Engineer as unsuitable or not in conformity with the Specifications or Contract Drawings, the Contractor shall promptly replace such materials and equipment with acceptable materials and equipment at no additional cost to the City. Equipment or materials rejected by the Engineer shall be tagged as such and shall be immediately removed from the Site.

4. The Engineer may order tests of imperfect or damaged Work equipment, or materials to determine the required functional capability for possible acceptance, if there is no other reason for rejection. The cost of such tests shall be borne by the Contractor, and the nature, tester, extent and supervision of the tests will be as determined by the Engineer. If the results of the tests indicate that the required functional capability of the Work, equipment, or material was not impaired, the Work, equipment or materials may be deemed acceptable, in the discretion of the Engineer. If the results of such tests reveal that the required functional capability of the questionable Work, equipment or materials has been impaired, then such Work, equipment or materials shall be deemed imperfect and shall be replaced. The Contractor may elect to replace the imperfect Work, equipment or material in lieu of performing the tests.

5. If, in the making of any test, it is ascertained by the Engineer that the material or equipment does not comply with the Contract, the Contractor will be notified thereof, and it will be directed to refrain from delivering said material or equipment, or to promptly remove it from the site or from the Work and replace it with acceptable material at no additional cost to the City. Upon rejection of any material or equipment submitted as the equivalent of that specifically named in the Contract, the Contractor shall immediately proceed to furnish the named material or equipment.

6. All welding must conform to the requirements of Specification Section 05 05 23.01 – Welding, and all other welding requirements as applicable and as determined by the Engineer.

C. Inspection and Testing of Concrete

1. Inspection and testing of concrete shall be in accordance with NYC Department of Environmental Protection (DEP) Bureau of Water and Sewer Operations (BWSO) Standard Sewer and Water Main Specifications.

2. All concrete shall be class 40 concrete, 4,000 psi, unless otherwise shown. Where indicated on the drawings, provide class 50 concrete, average cylinder strength not less than 5,000 psi. For class 50 concrete, adjust acceptance of structure limits 5,000 psi to 4,000 psi (retained payment), and less than 4,000 psi (rejected and removed).

D. Leakage Tests

1. All new pipelines and appurtenant structures and all new liquid containing structures shall be field tested for leakage after installation in accordance with NYC DEP BWSO Standard Sewer and Water Main Specifications.

E. Contractor's Surveyor

1. The Structures and Equipment Contractor shall retain the services of a licensed land surveyor, registered in the State of New York, to perform survey work including but not limited to establishing line and grade, in advance of the construction; and to perform other surveying services for the Work included under the Contract. The surveyor shall be subject to the approval of the Engineer. Survey drawings shall be submitted to the Engineer for approval.

2. The Contractor shall erect, install and maintain survey platforms, targets, benchmarks and similar facilities to be used by the Engineer in the performance of its inspection services; shall perform all survey work required before, during and after construction; and shall be in accordance with NYC DEP BWSO Standard Sewer and Water Main Specifications.

1.6 QUALITY ASSURANCE

A. A Quality Management Plan must be submitted for review and approval.

1.7 SUBMITTALS

A. Quality Assurance / Quality Management Plan

1. Within 15 days after the commencement work date given in the Notice to Proceed (NTP), the Contractor shall provide its QA/QC management plan to the Engineer for approval. The Engineer's review and acceptance of the Contractor's QA/QC plan shall not relieve the Contractor from any of its obligation to perform the Work.

2. Inspection of the Work by the Engineer is made solely for the benefit of the City. The inspection of the Work shall not relieve the Contractor of any of its obligations to fulfill the Contract as herein prescribed, and defective Work shall be repaired or replaced at the Contractor's sole expense. The Contractor's assigned QA/QC personnel are subject to the Engineer's review and continued acceptance. No Work covered by the QA/QC plan shall start until the Engineer's written acceptance of the Contractor's QA/QC plan has been obtained.

3. The QA/QC plan should consist of the following quality elements:

a. Roles & Responsibilities, communication protocols

b. Management and Production Inspections

c. Off-Site Supplier Quality

d. Vendor Capability Inspections

e. Notification & Coordination with the Engineer

f. Inspection Instructions

g. Traceability

h. Pre-Activity Meeting
i. Initial Inspections
j. Witness Shop Testing & QA Inspections

B. QA Acceptance / Shipping / Material Marking & Identification
1. On-Site Receiving & Materials / Equipment Control
2. Material / Equipment Receiving
3. CMTRs / Certificate of Compliance
4. Traceability
5. On-Site Storage, Care, & Maintenance
6. QA/QC Process and Operational Procedures
7. Submittal Management
8. Request for Information (RFI)

C. Five-Phases of Inspection Procedures
1. Phase 1 – Client Pre-Activity Meeting
2. Phase 2 – Initial Inspections
3. Phase 3 – On-Going Inspections
4. Phase 4 – Witness Shop Test Inspection and QA Inspections
5. Phase 5 – Final Inspections – Punch lists

D. Inspection and Test Plan (ITP)
1. Build Work Plan Procedure
2. Checklist & Hold Point Procedure
3. Witness and Hold Points
4. Control of Measuring & Calibrated Test Equipment Procedure
5. Reporting and control non-conforming work

E. Control & Responsibility
1. Non-Conformance Reporting (NCR) Disposition
2. QC Verification
3. Documentation

F. Root Cause Analysis (RCA) Process
1. Thresholds for RCA
2. Process
3. Preventive Action Plan
4. Implementation
5. Measurement of Effectiveness

G. Continuous Improvement

1. Recognition and Accountability
2. Measurement and Monitoring
3. Performance & Issues Matrix
4. Management Reviews
5. Audit and Assessments

H. Welding Control

1. Full Compliance with Specifications and Applicable Codes

I. Additional Submittals

1. The Contractor shall submit the following information prior to entering into a supply or service subcontract.
2. Contract number, supplies or services to be provided and a general description of the proposed item(s), such as trade name, type, etc. The name and address of the manufacturer and the location of the plant at which supplies will be manufactured and tested as required, or at which the services will be performed.
3. Experimental and test data required to support the claimed performance of the supplies.
4. A description of the testing plant, including the hydraulic, electrical and other facilities, in sufficient detail to show that the plant is adequately equipped for performing the tests, if such testing is required.

J. Any additional information that the Engineer may deem necessary in order to determine the ability of the supply or service company to produce the item as called for by the Specifications.

1.8 DELIVERY, STORAGE, AND HANDLING

A. All materials & equipment must be received, stored in a safe & adequate environment as per approved procedures.

PART 2 PRODUCTS

2.1 MATERIALS / EQUIPMENT

A. All work of assembly, installation, and construction shall be done in a neat, first class, and workman like manner. If the quality of the material, fixtures, fittings, supplies, equipment or work required by the Contract Drawings does not agree with that required by the Specifications, the required quality must be supplied. In asking for prices on, or placing orders for, materials, fixtures, fittings, supplies, and equipment intended for use or installation under this Contract, the Contractor shall provide the manufacturer or dealer with such complete information from these Specifications as may in any case be necessary. In every case, it shall quote in full to each such manufacturer or dealer the text of this subparagraph, as well as the text of such other portions of the contract, as are appropriate.

PART 3 EXECUTION

3.1 EXAMINATION / PREPARATION

A. Notice of Intent to Commence Manufacture

1. The Contractor shall give notice in writing to the Engineer sufficiently in advance of its intention to commence the manufacture or preparation of materials especially manufactured or prepared for use in or as part of the permanent construction as detailed in Section 01 43 10 – Contractor's Work Quality and Section 01 43 15 – Witness Shop Testing. Such notice shall contain a request for inspection, the date of commencement and the expected date of completion of the manufacture or preparation of materials. Upon receipt of such notice, the Engineer will: arrange to have a representative present at such times during the manufacture as may be necessary to inspect the materials; or notify the Contractor that the inspection will be made at a point other than the point of manufacture; or notify the Contractor that inspection will be waived.

2. In those instances, where the City inspector(s) arrive at the agreed-upon location, at the agreed-upon date and time, and find that the article(s) to be inspected are not ready for inspection, the inspector(s) will not wait at the facility. All additional travel expenses incurred shall be borne by the Contractor and shall be deducted from the Contractor's next payment, unless otherwise determined by City.

B. Field Measurements

1. The Contractor shall take all necessary measurements in the field to determine the exact dimensions for all Work required and verify all pertinent data and dimensions shown on the Contract Drawings prior to shop drawing submissions and construction.

3.2 ADJUSTING / PROTECTION / CLEANUP

A. All materials and equipment must be protected & wrapped during transport, storage & post installation.

END OF SECTION

SECTION 01 65 00 – PRODUCT DELIVERY, STORAGE AND HANDLING

PART 1 GENERAL

1.1 SUMMARY

A. Section Includes:

1. Delivery of products
2. Handling of products
3. Storage of products
4. Protection of material and equipment
5. Inspection of items
6. Supporting heavy loads

1.2 PAYMENT

A. There is no separate payment provision for this section, and shall be deemed included in the prices bid for the respective Contract items.

1.3 RELATED SECTIONS - Not Used

1.4 REFERENCES - Not Used

1.5 DESCRIPTION

A. General Requirements

1. The Contractor shall make all arrangements for transportation, delivery and handling of materials and equipment required for installation and completion of the Work.
2. Storage space at the site is limited. On-site storage only in areas permitted. Any off-site storage locations or facilities are to be inspected and approved by the Engineer prior to storing items.
   a. When storage of materials and equipment is off-site, deliveries to the site shall be scheduled to coincide with installation of the items.
   b. If necessary to move stored materials and equipment during construction, the Contractor shall move or cause to be moved materials and equipment without any additional compensation.
3. Unless otherwise specified, the City's docking facilities or hoisting equipment at or near the project site will not be available for the Contractor's use.
4. Transport and handle products in accordance with manufacturers' instructions and in compliance with all Federal, State and Local Laws.

1.6 QUALITY ASSURANCE - Not Used

1.7 SUBMITTALS - Not Used

1.8 DELIVERY, STORAGE, AND HANDLING

A. Delivery of Products

1. The Contractor shall arrange deliveries of products in accordance with construction schedules and with ample time to facilitate inspection prior to installation.

2. The Contractor shall coordinate deliveries to avoid conflict with Work and conditions at the site and to accommodate the following:

   a. Limitations of storage space

   b. Availability of equipment and personnel for handling products

   c. Materials and equipment shall not be delivered to Site until related Shop Drawings, including the manufacturer's recommended storage instructions, have been approved by the Engineer.

   d. Materials and equipment shall not be delivered to Site until required storage facilities have been provided.

   e. Products shall be delivered to the Site in the manufacturer's original, unopened, labeled containers. The Engineer shall be informed of all deliveries of all materials and equipment.

   f. Partial deliveries of component parts of equipment shall be clearly marked to identify the equipment, to permit easy accumulation of parts and to facilitate assembly.

   g. Immediately on delivery, the Contractor shall inspect shipments to ensure:
      1) Product complies with requirements of Contract Documents and approved Submittals.
      2) Quantities are correct.
      3) Containers and packages are intact and labels are legible.
      4) Products are properly protected and undamaged.

B. Handling of Products

1. The Contractor shall provide equipment and personnel necessary to handle products in a manner that prevents soiling or damage to products or packaging.

2. The Contractor shall provide additional protection during handling as necessary to prevent scraping, marring or otherwise damaging products or surrounding surfaces.

3. The Contractor shall handle products in a manner that prevents bending or overstressing.

4. Heavy components shall be lifted only at designated lifting points.

5. Materials and equipment shall be handled at all times in a safe manner and as recommended by manufacturer or supplier so that no damage will occur to them. Do not drop, roll or skid products off delivery vehicles. Hand carry or use suitable materials handling equipment.

C. Storage of Products

1. Handle and lift products only at designated lift points and by methods to avoid soiling, disfigurement, bending, overstressing and damage.

2. Store products on shelves, in bins, or in neat groups of like items, with seals and labels intact and legible, and in a manner to provide access for maintenance and inspection.

3. Store loose granular materials on clean, solid, flat surfaces and prevent mixing with foreign matter. Store fabricated products supported above the ground on skids or blocking. Provide erosion control and surface drainage to prevent erosion and ponding of water as per the contract documents or directed by the Engineer.

4. Cover products subject to discoloration or deterioration with impervious sheet covering and protect products from soiling and staining.

5. Store and protect products that are subject to damage by the elements in weather-tight or climate-controlled enclosures, and according to manufacturer's instructions. Maintain temperature, ventilation, and humidity within ranges stated in manufacturer's instructions.

6. Attach applicable manufacturer's storage service instructions labeled "STORAGE SERVICE INSTRUCTIONS ENCLOSED" to exterior of each stored product.

7. Inspect, maintain and service stored products on a regularly scheduled basis, consistent with manufacturer's instructions.

8. Record inspection, maintenance and services performed and keep log available for review by the Engineer.

D. Protection of Materials and Equipment

1. The Contractor shall make every effort to minimize extended storage periods of materials and equipment at the Site by judiciously scheduling deliveries to coincide with construction needs.

2. Unless otherwise specified, storage of any mechanical or electrical equipment or other ultraviolet or weather sensitive items out of doors at any time is prohibited regardless of the protection furnished. Storage of mechanical and electrical equipment within structures at the Site will not be permitted unless the structures are enclosed. A structure shall be considered to be enclosed when it is roofed and has protection of doorways, windows and other opening closures.

3. All mechanical and electrical equipment shall be coated, wrapped and otherwise protected from snow, rain, drippings of any sort, dust, mud, condensed water vapor, etc., during shipment, storage, and installation and until placed in service.

4. All storage areas for motors shall be heated. Space heaters shall be supplied, as required, in all enclosures being utilized for storage of motors. Motors equipped with space heaters shall be properly wired and the heaters activated while the motors are in storage.

5. Should storage of mechanical and electrical equipment become necessary before it can be stored at the Site, the Contractor shall provide storage in a weatherproof warehouse.

6. Materials may be stored out of doors if supported above ground surface on wood runners and protected with approved, effective and durable covers.

7. All storage and protection of materials and equipment at the Site shall be subject to the approval of the Engineer.

8. Prior to installation of the equipment, the Contractor shall have the manufacturer inspect the equipment and certify that its condition has not been detrimentally affected by a long storage period. Such certifications by the manufacturer shall be deemed to mean that the equipment is judged by the manufacturer to be in a condition equal to that of equipment that has been shipped, installed, tested and accepted in a minimum time period. As such, the manufacturer will guarantee the equipment equally in both instances. If such a certification is not given, the equipment shall be judged to be defective, and shall be removed and replaced at the Contractor's expense.

9. When stored materials and equipment are moved from the storage location to the Site, the Contractor shall move or cause to be moved the items without additional compensation.

E. Inspection of Items

1. The Contractor shall inspect all items including all boxes, crates and packages containing materials and equipment for damage that may have occurred during shipment prior to their removal from the truck or other manner of conveyance. Any damage shall be reported immediately to the Engineer.

2. The Contractor shall then carefully remove the materials and equipment from the truck or trucks on which they were shipped. The materials and equipment shall then be transported to the place of installation at the job Site. The Contractor shall be liable for loss or damage to the materials and equipment that may occur while being unloaded, transported, stored or installed.

3. All materials and equipment that arrives at the job site during normal working hours shall be unloaded as soon as practicable.

F. Supporting Heavy Loads

1. In all cases where heavy loads or demolition may temporarily affect existing slabs, the Contractor shall confirm the slab's load sustaining ability. Whenever heavy loads are to be stored or temporarily imposed on slabs, or whenever the structures may be impacted by demolition, the Contractor shall submit for approval by the Engineer a plan of procedure prepared by a licensed professional engineer, indicating a structural analysis of the slabs and methods of distributing loads, and providing auxiliary support so that slabs and beams are not loaded in excess of their design loadings.

END OF SECTION

SECTION 01 73 12 – MAINTENANCE OF OPERATIONS & CONSTRUCTION STAGING

PART 1 GENERAL

1.1 SUMMARY

A. Maintenance of site operations

B. General criteria and restrictions

C. Construction staging

1.2 PAYMENT

A. There is no separate payment provision for this Section, and shall be deemed included in the prices bid for the respective Contract items.

1.3 RELATED SECTIONS

A. Division 1 General Provisions of the NYC DEP BWSO Standard Sewer and Water Main Specifications Section 10.13

1.4 REFERENCES

A. Not Used

1.5 DESCRIPTION

A. In addition to the requirements of NYC DEP BWSO Standard Sewer and Water Main Specifications Section 10.13, the Contractor shall adhere to the following:

1. Throughout construction of the upsized 10th Street branch interceptor, the Contractor shall be responsible for maintaining the flow to the interceptor through the existing 24” branch interceptor, new 42” branch interceptor, and/or temporary bypass throughout construction. Contractor shall also be entirely responsible for the design of any temporary supports to maintain the integrity of the existing interceptor through construction and installation of the upsized branch interceptor on 10th Street. The design of temporary works shall be signed and sealed by a licensed New York State Professional Engineer and submitted along with the proposed construction approach to the Engineer for approval prior to start of construction.

2. The contractor shall submit sewer bypass designs and calculations to DEP BWT Operations for approval 90 days prior to construction. The Contractor shall be entirely responsible for the installation, performance, and maintenance of the temporary bypass.

3. Contractor shall notify DEP BWT Operations 24 hours prior to entry into DEP structures and/or interceptors.

4. Throughout construction, the Contractor shall provide the following:

   a. Contractor shall provide for air passage through branch interceptor manhole covers to prevent cover displacement in the event of air pressure build up in the interceptor during construction.

   b. Prior to modifications to the existing interceptor manhole and branch interceptor, the Contractor shall implement measures to

prevent and capture any debris from entering the interceptor flow. The branch interceptor shall be cut using demo or wire saw or other similar method such that debris is fully captured during the cutting activity. Jackhammering and other disruptive methods are not permitted. The Contractor shall promptly remove any debris, silt, etcetera which enters the interceptor.

c. CCTV inspection of the existing 24" branch interceptor and the interceptor 500 feet upstream and downstream of the modified existing interceptor manhole shall be conducted before construction. CCTV inspection of the new 42" branch interceptor and the interceptor 500 feet upstream and downstream of the modified existing interceptor manhole shall be conducted after construction.

d. The Contractor shall be responsible for the structural integrity and flow through the branch interceptor and interceptor manhole within 500 feet of upstream and downstream of work extents. Contractor shall repair any breaks and/or leaks and perform all required maintenance to immediately remove and dispose of any debris at the Contractor's own cost and expense.

e. Wireless level sensors shall be provided for remote monitoring of all bypass pumping suction and discharge points. High water level alarms with dial-out to Contractor shall be provided.

B. Maintenance of Site Operations

1. The Contractor shall perform its work in a manner such that the City can keep the existing site/facility in continuous dependable operation. Any temporary work that may be required to maintain the site/facility in operation shall be furnished by the Contractor at the direction of the Engineer at no extra cost to the City.

2. The Contractor must keep the Engineer of the facility/site informed of any Work that may interfere with normal operations. The Engineer must receive a written request at least 15 days in advance of proposed work.

a. The CPM schedule maintained by the Contractor shall not serve as prior notice. No work shall proceed prior to the written approval of City.

3. Unless otherwise permitted by the facility/site representative, no existing valves or equipment shall be operated by the Contractor.

4. The employees of the Contractor or its Subcontractors may be prohibited from entering or using some areas of the site/facility.

C. General Criteria and Restrictions

1. The following general criteria and restrictions shall apply to the Work except where otherwise noted in the Contract:

a. When the connection of a new pipeline to an existing structure or pipeline requires a shutdown of the existing structure or pipeline, the new pipeline except for the final connection shall be tested prior to proceeding with the shutdown. When the final connection is

completed, including complete survey and inspection of pipe in accordance with NYC DEP BWSO Standard Sewer and Watermain Specifications, the new pipeline shall be tested again in its entirety.

b. The Contractor shall provide all pumps, piping, valves, etc., as necessary to dewater all conduits, channels, and pipes directly to a location approved by the Engineer.

c. The Contractor shall provide all pumps, piping, valves, etc., as necessary, to remove unused chemicals from all pipes as described herein.

d. The Contractor shall flush and clean all process channels, conduits, manholes, and tanks after they have been removed from service.

e. Any modification to, relocation of, connection to or shutdown of an existing tank, vessel, conduit, channel, pipe, etc. shall not be scheduled or occur prior to the Engineer's written approval. The Contractor is advised that the conduits, channels and tanks may contain accumulations of putrescible materials which will remain on the walls and inverts. These materials emit noxious, odorous and hazardous gases such as hydrogen sulfide and methane. The Contractor is advised to ventilate and test the air of all confined spaces prior to entry.

f. The Contractor is advised that existing valves, gates and other devices shall be considered as inoperable and subject to leaking. The Contractor shall be responsible for designing, furnishing, installing and removing all temporary devices, stop logs, plugs or bulkheads necessary to isolate or dewater pipes, channels, conduits, or tanks to perform the work.

g. The Contractors shall install and maintain temporary drainage and containment, to the satisfaction of the City, where the existing drainage and containment has been removed due to construction progress until the permanent replacement drainage and containment system has been installed.

h. The Contractor shall coordinate its activities with the other contractors on the site so as to comply with the provisions of these specifications and their intent.

2. The following general restrictions shall be applied to all equipment and appurtenant utility systems:

a. The restrictions provided herein serve to maintain the existing site facilities in continuous operation and to coordinate with other construction activities at the site in accordance with the requirements of the authorities having jurisdiction.

b. Existing fire suppression piping at / near Work Sites shall be operational at all times until replaced.

c. Plumbing Facilities: All building plumbing systems such as sanitary facilities, roof and floor drains, pumping, etc., shall be maintained until turned over by site operations for demolition.

d. Storm Drainage: Storm drainage on the site shall be operational at all times. If necessary, the Contractor shall pump between manholes during the installation of new piping or underground utilities. Roof drainage shall be maintained at all times and no roof shall be permitted to accumulate standing water.

e. All site drainage flows shall not be interrupted.

f. Power, Light and Communication Systems: Electric power, lighting service, security camera systems and communications systems shall be maintained in uninterrupted operation in all areas that remain in operation. Individual units may be disconnected as required for replacement or relocation.

g. Sump Pumps and Sumps: All existing sumps shall be maintained in an operable condition with either existing pumps or temporary pumps. Interim piping, power and controls shall be provided as required.

h. Drainage Pipes and Conduits:

1) Unless otherwise specified, the contents of all pipes, conduits, pits or other liquid containing structures shall be transferred to a location approved by the Engineer using hoses, piping or pumps if hydraulic conditions so require them. The Contractor, whose work requires the draining, shall provide the pumps, piping and hoses.

2) If a drain is not available on the pipe to be drained, then a wet tap shall be made using a tapping saddle and valve. No uncontrolled spillage of a pipe's contents shall be allowed, nor shall a pipe's contents be discharged to a sump.

3) Any spillage shall be immediately washed down and the floor drains, sumps and sump pump discharge piping flushed out to prevent clogging and odors.

i. Temporary Partitions and Enclosures: The contractors shall provide temporary partitions and enclosures as required by the contract documents where necessary to maintain dust-free, heated and ventilated spaces in areas which are adjacent to the work and which must be kept operational by site operations personnel.

3. The following requirements shall be adhered to in development of the circulation plan to be submitted in accordance with the provisions of this Section.

a. Comply with, at a minimum, all requirements of the following:

1) Division 1 General Provisions of the NYC DEP BWSO Standard Sewer and Water Main Specifications

b. Construction-related vehicles and activities shall not impede or otherwise adversely affect the flow of regular traffic traveling on the roads leading to and adjacent to the Work location, except as allowed by the traffic stipulations.

1) Construction-related vehicles and activities shall be understood as including vehicles operated and activities undertaken by the Contractor (including employees, subcontractors, and visitors). Regular traffic shall be understood as referring to all vehicles other than construction-related vehicles.

c. Perform the Work required in this Contract in accordance with applicable traffic and safety rules, regulations, ordinances, and permit conditions.

4. Any temporary work that may be needed to maintain the site facilities in operation, and that is made necessary by the requirements of the Contract or by the Contractor's activities, shall be provided by the Contractor as specified under the Contract Documents or at the direction of and at no extra cost to the City.

5. The Contractor shall not remove any items from service without written permission from the Engineer. Upon receiving written approval from the Engineer, the Contractor shall proceed with the Work and shall proceed continuously until the Work is completed, tested, and made ready for operation.

D. Construction Staging

1. The Work included under this Contract, shall be performed in accordance with the Contract Documents. Further, the Contractor shall submit a comprehensive work schedule to the Engineer to demonstrate that it shall rigidly adhere to these requirements.

END OF SECTION

SECTION 01 73 17 – INSTALLATION OF EQUIPMENT

PART 1 GENERAL

1.1 SUMMARY

A. Contractor shall provide all labor, materials, equipment, incidentals, and appurtenances as shown, specified and required, to install equipment.

1.2 PAYMENT

A. There is no separate payment provision for this Section, and shall be deemed included in the prices bid for the respective Contract items.

1.3 DESCRIPTION

A. General

1. This Section includes the following:
    a. Concrete foundations, bases, dowels and anchor bolts.
    b. Sleeves, recesses, openings, chases and related concrete installation items.
    c. Supervision by manufacturers' representatives.
    d. Workmanship.
    e. Clearance and safeguards.
    f. Alignment and leveling.
    g. Cutting and patching.
    h. Lubrication.
    i. Maintenance of installed equipment.
    j. Protection of installed equipment.
2. The Contractor shall have adequate resources on site, including labor, materials, construction tools and equipment, to successfully perform the Work.
3. The Contractor shall be responsible for locating, aligning and leveling all equipment and shall employ a surveyor licensed in the State of New York to set all lines and levels of equipment to the accuracies specified in the Contract Documents.
4. Manufacturer's complete and official installation instructions, including permissible tolerances, shall be furnished in duplicate with each unit of equipment or set of identical units.
5. All equipment shall be installed in accordance with the approved shop drawings (including manufacturer's specifications, drawings, and tolerances) and under the direct supervision of the required manufacturer's representative. In no instance shall the directions of the manufacturer's representative contravene the Engineer's direction.

6. Equipment shall be erected in a neat and workmanlike manner on the foundations at the locations and elevations shown on the approved shop drawings unless directed otherwise by the Engineer during installation.

7. As a condition precedent to the acceptance of equipment installed and operating, the Contractor shall provide the Engineer with written certification, obtained from each company manufacturing equipment for the Work that the equipment is installed and does operate in accordance with the Contract Documents and manufacturer's recommendations.

B. Concrete Foundations, Bases, Dowels and Anchor Bolts:

1. The Contractor shall provide all reinforced concrete foundations, bases, dowels, and anchor bolts for all equipment and piping furnished under this Contract.

a. All reinforced concrete bases and supports shall be steel reinforced and dowelled to floor slabs. Where possible, dowels shall be in place before new floor slab concrete is placed.

2. Where not explicitly stated in the Contract Documents, the Contractor shall utilize foundation bolt drawings or templates for the installation of equipment requiring concrete bases.

3. Dowelling into existing work shall be provided under this Contract.

a. Anchor bolts penetrating into existing reinforced concrete work shall be in accordance with Specification Section 05 05 23.02 – Miscellaneous Metal Fastenings.

b. All concrete bases for equipment shall be treated with an approved sealer to prevent oil and grease from seeping into the concrete.

4. Installation of reinforced concrete bases and the installation of dowels and anchor bolts into existing and new reinforced concrete work shall be in accordance with the Contract Documents and the manufacturer's recommendations, and shall be subject to the approval of the Engineer.

C. Sleeves, Recesses, Openings, Chases and Related Concrete Installation Items:

1. The Contractor shall make provisions as shown on the Contract Drawings, specified, and/or otherwise required for sleeves, recesses, openings, chases, and related items, for installation of the equipment and materials

2. When the Contract requires the placing of conduits, saddles, boxes, cabinets, sleeves, inserts, foundation bolts, anchors and other similar work in floors or walls of buildings and structures, they shall be promptly installed in conformity with the Contract Documents. The Contractor shall arrange the work in strict conformity with the approved construction schedule and avoid interferences with the work of other contractors.

PART 2 EXECUTION

2.1 EXAMINATION / PREPARATION

A. Concrete foundations for equipment must meet the manufacturer’s recommendations and shall be adequate in size, suitable for the equipment

erected thereon, properly reinforced, and tied into floor slabs by means of reinforcing bars or dowels. Foundation bolts of ample size and strength shall be provided and properly positioned by means of suitable templates and secured during placement of concrete. Foundations shall be built and bolts installed in accordance with the manufacturers approved drawings.

B. Before mounting equipment on a foundation, the Contractor shall clean the top surface; if necessary, rough it with a star chisel and clean again; and clean out all foundation bolt sleeves.

1. The Contractor shall provide a sufficient number of shims about 2-in. wide and 4-in. long, and of a varying thickness from ⅛-in. to ½-in.. A combination of these shims shall be placed next to each foundation bolt to bring the bottom of the bedplate or frame about 1/8 inch above the final setting. The equipment shall be lowered by changing the combination of shims. The Contractor shall use brass shim stock of various thicknesses, and continue to level the equipment a little at a time and in rotation until it is at the correct elevation in both directions.

2. When the equipment is level, the Contractor shall tighten down on the foundation bolts a little at a time, in rotation, to make certain the equipment remains level and does not shift on the shims. A preliminary alignment check shall be made before grout is placed.

C. Equipment shall be set, aligned and assembled in conformance with manufacturer's instructions. Runout tolerances by dial indicator method of alignment shall be plus or minus 0.002-in. or as directed by the manufacturer, whichever is more stringent.

D. All blocking, wedges, shims, filling pieces, or other materials required for the proper support and leveling of equipment during installation shall be furnished by the Contractor. All temporary supports shall be removed, except the shims, which may be left in place with the approval of the Engineer. Any grinding necessary to bring parts to proper bearing after erection shall be done at the expense of the Contractor.

E. Each piece of equipment or supporting base, bearing on concrete foundations, shall be bedded in grout. The Contractor shall provide a minimum of 1½-in. thick grouting under the entire base plate supporting each pump, motor drive unit, and other equipment. Grouting shall be as specified in the respective equipment specification section(s) and as approved by the Engineer.

F. When motors are shipped separately from driven equipment, the motors shall be received, stored, have insulation resistance tested once a month, and the reports submitted to the Engineer. Space heaters shall be supplied in all enclosures being utilized for storage of motors. After driven equipment is set, the motors shall be set, mounted, shimmed, mill righted, coupled and connected complete.

G. Moving parts shall be rotated a minimum of once weekly before and after installation to ensure proper lubrication and to avoid metal-to-metal welding and to prevent "flat-spotting" of bearings.

H. Anchor and expansion bolts shall be furnished by the Contractor as specified and required by this Contract Documents.

I. At threaded connections, a molybdenum disulfide anti-seize compound shall be applied to all threads in mechanical connections such as bolts, studs, cap screws, tubing, etc., unless otherwise indicated.

2.2 IMPLEMENTATION

A. Workmanship:

1. The following erection details are not intended to be all-inclusive, but only to cover some of the important practices. In all cases, only the best methods known to the trades are to be employed.

2. Only those workers qualified in the handling, setting, alignment, leveling and adjustment of the type of equipment supplied shall be employed in the Work.

3. An oil bath heater shall always be used to expand couplings, gears, etc. They shall not be forced or driven on equipment shafts, nor shall they be subjected to an open flame or torch.

4. Wedging shall not be permitted. Only the least number of flat shims are to be used in leveling equipment (shims are to be clean and free of slag). All shims, filling pieces, keys packing, red or white lead grout, or other materials necessary to properly align, level and secure apparatus in place shall be furnished by the Contractor. All parts intended to be plumb or level must be proven exactly so. Any grinding necessary to bring parts to proper bearing after erection shall be done at the expense of the Contractor.

5. Proper tools shall be used in the assembly of equipment and materials to prevent marring the surface of shafts, nuts, or other parts.

6. Connections requiring gaskets shall be tightened evenly all around to ensure uniform stress over the entire gasket area.

7. No equipment and materials shall be altered or repaired, and no burning or welding will be permitted on any parts having machined surfaces, except by written permission of the Engineer.

8. No rigging shall be done from any structure without the permission of the Engineer, and the Contractor shall be completely responsible for any damage to the structure due to its operations.

9. Only such equipment and materials that shall not damage the structure or equipment and materials shall be used on the Work.

10. The Contractor shall be responsible for the exact alignment of equipment with associated piping and, under no circumstances, will "pipe springing" be allowed.

11. Misaligned holes shall be reamed, as excessive driving of bolts or keys will not be permitted.

12. The Contractor shall furnish and install all necessary plugs in lubrication holes to prevent entry of foreign material.

B. Clearances and safeguards:

1. All devices, equipment, and systems furnished under this Contract shall be fabricated and installed so that the necessary and required clearances are

provided for operation, maintenance, repair, and replacement. It is the Contractor's responsibility to review the Contract Drawings and ensure that the necessary and required clearances are available, and it is the Contractor's responsibility to notify the Engineer in the event that such clearances cannot be provided based on the Contract Documents.

2. The construction arrangement, assembly locations, and guarding of all equipment shall conform to the latest ANSI safety practices, the New York State Industrial Code, and all standards specified in the Contract Documents.

C. Alignment and leveling:

1. All couplings shall be aligned while the equipment is free from all external loads.

2. Both angular and parallel alignment shall be checked, and the degree of misalignment shall be recorded and submitted to the Engineer.

3. Dial indicators shall be used for the checking of angular and parallel alignment. During rotation of the held couplings in performance of this test, they shall be maintained in the same relative position, and the dial indicator readings shall be taken at the same place on the circumference of the coupling.

4. Misalignment shall not exceed the manufacturer's tolerances.

D. Cutting and patching:

1. Whenever it becomes necessary to cut existing work, the location and size of cut and method of cutting shall be as approved by the Engineer and adjacent work shall not be damaged. On completion of the cutting, all affected areas shall be restored satisfactorily by qualified workers.

E. Lubrication:

1. All lubrication shall be performed by the Contractor in accordance with the lubricant specifications and directions furnished by the manufacturer.

a. If required by the manufacturer's specifications and/or instructions, the Contractor shall provide lubrication of equipment while in storage, from delivery to installation.

2. The Contractor shall furnish required lubricants for the equipment until it is accepted.

3. Lubricants shall be changed upon completion of installation and as frequently as required thereafter during the period between installation and acceptance. New lubricants shall be put into the equipment at the time of acceptance.

2.3 FIELD TESTING / QUALITY CONTROL

A. Supervision by Manufacturer's Representative: The Contractor shall provide the services of qualified technical representatives of the equipment manufacturers who shall adequately supervise, in person and on site, the installation and testing of all equipment furnished under this Contract and instruct the Contractor's

personnel and City operating personnel on maintenance and operation of its equipment.

1. The manufacturers' representatives shall devote, at a minimum, the entire amount of time specified under the relevant Specification sections for the equipment. Any additional time required to achieve successful installation and operation shall be at the expense of the Contractor.

2. The manufacturers' representatives shall sign in and out in a log for this purpose kept by the Engineer on every occasion they are on the Site and shall indicate time of arrival, departure, and the purpose of their visit.

2.4 STARTUP / DEMONSTRATION

A. Not Used

2.5 ADJUSTING / PROTECTION / CLEANUP

A. During the period between installation and substantial completion, the Contractor shall maintain all equipment in accordance with the equipment manufacturer's instructions as approved by the Engineer.

1. The Contractor shall also provide protection of installed equipment, as required, to prevent damage and remove protection devices/facilities, when no longer needed, prior to completion of work:

a. Projections such as wall corners, jambs, sills and soffits of openings, shall be covered in areas used for traffic and for passage of products in subsequent work.

b. Equipment for which shop finish paint is required shall be protected in the shop and during transportation and installation to prevent injury and abrasion. Such equipment shall be scheduled for installation when a building is considered enclosed and as late as possible in the construction schedule. However, maintenance of schedules may require the installation of such equipment in unheated areas and in areas where masonry work, concrete finishing, steel erection, painting, and other work will be in progress.

1) Shop finished Work shall be protected during and after installation by waterproof wrappings sealed to prevent condensation on surfaces. Wrappings shall be sufficient to protect surfaces from damage by drippings from masonry and painting work, and additional covering or sheathing shall be provided to protect equipment from contact damage that might result from work in progress in adjacent areas.

2) Prior to Substantial Completion, wrappings and coverings shall be removed, equipment shall be cleaned and all scratches and abrasions shall be refinished.

END OF SECTION

SECTION 05 05 23.01 – WELDING

PART 1 GENERAL

1.1 SUMMARY

A. The Contractor shall perform all field welding as specified herein and as indicated on the Contract Drawings. The work shall include, but not limited to, the following items:

1. Procedure specifications.
2. Procedure qualifications.
3. Welder, welding operator and tacker qualifications.
4. Inspection.
5. Testing and repair of defective welds.

1.2 PAYMENT

A. Work performed under this Section shall be paid for as part of work performed in accordance with NYC DEP BWSO Standard Sewer and Water Main Specification Sections 51.11 and 51.71.

1.3 RELATED SECTIONS

A. All Common Works specifications sections (Division 01) apply to this Section.

B. Requirements from the following sections also apply to this Section:

1. Section 05 06 00.01 – Schedules for Stainless Steel Work
2. Section 05 50 00 – Metal Fabrications

1.4 REFERENCES

A. Definitions

1. Definitions of welding terms shall be in accordance with ANSI/AWS A3.0.

B. Reference Standards:

1. AISC-04 - Specification for Structural Steel Buildings - Allowable Stress Design and Plastic Design.
2. ANSI/AWS A2.4 - Standard Symbols for Welding, Brazing and Nondestructive Examination.
3. ANSI/AWS A3.0 - Standard Welding Terms and Definitions.
4. ANSI/AWS D1.1 - Structural Welding Code - Steel.
5. ANSI/AWS D1.4 - Structural Welding Code – Reinforcing Steel.
6. ANSI/AWS D1.6 - Structural Welding Code - Stainless Steel.
7. AWS Z49.1 - Safety in Welding and Cutting and Allied Processes.

1.5 DESCRIPTION

A. All welding shall be performed in accordance with ANSI/AWS D1.1 and ANSI/AWS D1.6.

B. All structural welding and gas cutting shall conform to the requirements of the American Welding Society (AWS), American Society of Mechanical Engineers (ASME), NYC Department of Buildings (DOB) and the New York City Construction Code. All welding of pipe, fittings and pipeline equipment shall be performed by

qualified welders as specified by the latest requirements of the ASME and AWS codes and their supplements, as applicable.

C. Welders shall be certified in compliance with AWS D1.1 through D1.6, as applicable and as approved by the Engineer, and shall be qualified by an independent testing laboratory approved by the Engineer.

D. Welding shall not be started until welding procedures, welders, welding operators and tackers have been qualified and copies of all records and reports submitted and approved by the Engineer.

E. The Contractor shall be responsible for the quality of welding and shall maintain records of the test results obtained from the welding procedure, welder, welding operator and tackers performance qualifications.

F. Each weld shown or indicated on the Contract Drawings shall be made as specified on the approved procedure specifications provided to cover each type of weld.

G. Test specimens shall be prepared by the Contractor for each type of welded joint as designated in Article 1.6.A, Welding Procedure Qualifications. Destructive tests of specimens for procedure and welder qualifications shall be conducted in accordance with ANSI/AWS D1.1, Section 4, Qualifications, and the requirements specified herein.

H. Symbols

1. Symbols on the Contract Drawings, shop drawings and erection drawings shall be in accordance with ANSI/AWS A2.4.

I. Safety Precautions

1. Safety precautions during welding shall conform to AWS Z49.1.

J. Welding Requirements

1. Contract Drawings will include the following information:

a. Size, length, type and location of welds.

b. Location of welds for which non-destructive testing is required. When location of non-destructive testing is not shown, it will be indicated by the Engineer in the field.

2. Workmanship and techniques for welded construction shall conform to the requirements of ANSI/AWS D1.1 and AISC-04. When ANSI/AWS D1.1 and AISC-04 are in conflict, the requirements of ANSI.AWS D1.1 shall govern.

3. Where dissimilar steel are welded together, the procedure used shall be the same as the one used for the lower strength steel.

4. All groove welds shall be 100 percent complete penetration welds as defined in ANSI/AWS D1.1 or shown in ANSI/AWS D1.4 for reinforcing steel, regardless of whether a backup plate is shown or whether the supplementary backing weld or melt-through symbol is included, in each groove-weld symbol shown unless partial penetration is included in the weld symbol.

5. Gun welded studs shall conform to the requirements of ANSI/AWS D1.1, Section 7.

6. Upon completion of welding, all weld splatter, flux, slag and burrs left by attachments shall be removed. Welds shall be repaired to produce a workmanlike appearance with uniform weld contours and dimensions. All sharp corners of material which is to be painted or coated shall be ground to a minimum of 1/32-inch on the flat.

K. Standard of Acceptance

1. Dimensional tolerances for welded construction, details of welds, and quality of welds shall be in accordance with the applicable requirements of ANSI/AWS D1.1, ANSI/AWS D1.4 and the Contract Drawings.

2. The welding shall be subject to inspection and tests in the shop and project site. Inspection and tests in the shop will not relieve the Contractor of the responsibility to furnish weldments of satisfactory quality.

3. All welding exhibiting any cracks, either in the weld metal or the parent metal, will be rejected.

4. Incomplete fusion or lack of penetration will not be allowed, and the weld will be rejected.

5. When materials or workmanship do not conform to the acceptance requirements, the Engineer reserves the right to reject material or workmanship or both at any time before final acceptance of the structure containing the weldment.

L. Corrections and Repairs

1. General: In lieu of rejection of an entire piece or member containing welding which is unsatisfactory or which indicates inferior workmanship, the corrective measures listed hereinafter may be permitted by the Engineer. The Engineer's specific approval must be obtained before making each correction. Corrective measures shall be made at the Contractor's expense and to the satisfaction of the Engineer and/or an acceptable independent testing lab.

2. Defective or unsound welds or base metal shall be corrected either by removing and replacing the entire welds, or as follows:

   a. Excessive convexity and overlap shall be reduced by removal of excess weld metal.

   b. Any concavity of weld, crater, undersize welds or undercutting shall be corrected by cleaning and depositing additional weld metal.

   c. Excessive weld porosity, slag, inclusions or incomplete fusion shall be repaired by removing defective portions and rewelding.

   d. Cracks in weld or base metal shall be repaired by removing crack throughout its length, including sound weld metal 2 inches beyond each end of the crack and rewelding.

3. The removal of defective weld metal or portions of the base metal shall be done by chipping, grinding, oxygen cutting, oxygen gouging, or air carbon-

arc and in such a manner that the remaining weld metal or base metal is not nicked or undercut.

4. Additional weld metal shall be deposited using an electrode smaller than that used for making the original weld, and not more than 5/32-inch diameter. The surface shall be cleaned thoroughly before welding.

5. Caulking of welds shall not be permitted.

6. Improperly fitted parts may be cut apart and rewelded. Members distorted by welding shall be straightened by mechanical means or by carefully supervised application of a limited amount of localized heat.

   a. The temperature of heated areas shall not exceed 1,200 degrees Fahrenheit (a dull red color). Temperature shall be carefully measured with temperature indicating crayons during the heating operation.

   b. Parts to be heated for straightening shall be substantially free of stress and from external forces, except those stresses resulting from mechanical means used in conjunction with the application of heat.

7. Peening of welds is prohibited.

1.6 QUALITY ASSURANCE

A. Welding Procedure Qualifications

1. General: Except for prequalified or previously qualified procedures, the Contractor shall qualify the welding procedure specifications for any welding procedure performed in the fabrication of weldments.

2. Welding procedure specification and the results of the procedure qualification test for each type of welding, which requires procedure qualifications, shall be submitted for approval. Approval of any procedure, however, will not relieve the Contractor of the sole responsibility for producing a finished structure meeting all the requirements of these Specifications. This information shall be submitted on the forms in Annex E of ANSI/AWS D1.1.

   a. Procedures, when qualified, become the welding procedure specifications and are to be followed in making welds on the subject materials and provide a means of assuring reproducible results and quality control.

   b. Separate procedure specifications shall be prepared for each type of weld.

   c. Welding procedure specifications shall be individually identified and shall be referenced on the shop drawings and erection drawings or shall be suitably keyed to the Contract Drawings.

3. Previous Qualifications: Welding procedures previously qualified by test may be acceptable for this Contract without requalification if the following conditions are met:

a. Testing was performed by the Contractor's welder at an approved, AWS Accredited Test Facility.

b. The qualified welding procedure conforms to the requirements of this Section and is applicable to welding conditions encountered under this Contract.

c. The welder, welding operator and tacker qualification tests conform to the requirements of this Section and are applicable to welding conditions encountered under this Contract.

4. Prequalified Procedures: Welding procedures which are considered prequalified as specified in ANSI/AWS D1.1 and ANSI/AWS D1.4, will be accepted without further qualification.

a. The Contractor shall submit for approval a listing and an annotated drawing to indicate the joints not prequalified.

b. Procedure qualification shall be required for the joints not prequalified.

5. Retests: If welding procedure fails to meet the requirements of ANSI/AWS D1.1 or ANSI/AWS D1.4, the procedure specification shall be revised and requalified.

a. At the Contractor's option, with the Engineer's approval, welding procedure may be retested in accordance with the standards.

b. If the welding procedure is qualified through retesting, all test results, including those of test welds that failed to meet the requirements, shall be submitted with the welding procedure.

B. Welder, Welding Operator and Tacker Qualification

1. General Information: Each welder, welding operator and tacker assigned to work on this Contract shall be certified in conformance with ANSI/AWS D1.1, Section 4. Welders performing field welding shall also be New York City certified, and all welding shall be done in conformity with the NYBC and BS&A.

2. Certificates: Before assigning any welder, welding operator or tacker to work under this Contract, the Contractor shall submit to the Engineer the names of the welders, welding operators and tackers to be employed and certification that each individual is qualified as specified.

a. The certification shall state the type of welding and positions for which the welder, welding operator or tacker is qualified, the code and procedure under which the individual is qualified, the date qualified, and the name of the firm and person certifying the qualification tests.

b. The certification shall be kept on file at the job site by the Contractor. The certification shall be kept current for the duration of the Contract

c. All shop welding shall be performed in accordance with the relevant work-specific requirements in the Specifications and Contract Drawings.

d. If existing certification is not approved or not submitted, then the welders/welding shop/tack welders must be qualified in accordance with the above procedures and tests, as administered by an inspection agency approved by the Engineer. All costs associated with the required tests for certification and/or retests, if any, shall be borne by the Contractor. The Quality Assurance Section shall be given a notice of not less than 5 business days prior to such tests and may elect to witness any or all of these tests

e. Any deviation from the above shall not be permitted without a written waiver from the Engineer or the Engineer's designee.

3. Identification of Welds: The Contractor shall assign each welder, welding operator or tacker an identifying number, letter or symbol which shall be used to identify all welds made by that person. For identification, the welder, welding operator or tacker shall apply the assigned symbol adjacent to the weld by means of a rubber stamp, felt tipped marker with waterproof ink or other methods that do not cause an indentation in the metal. Identification with die stamps or electric etches shall not be allowed.

4. Record of Welds: The Contractor shall maintain a record of all welders, welding operators and tackers employed on the Contract showing the date and results of tests and the identification mark assigned to each person. These records shall be certified by the Contractor and copies of the records shall be furnished to the Engineer.

5. Previous Qualifications: At the discretion of the Engineer, welders, welding operators and tackers qualified by test within the previous 6 months may be accepted for this Contract without requalification if all of the following conditions are met:

a. Copies of the welding procedure specifications, the procedure qualification test records, and the welder, welding operator, and tacker qualification test records are submitted and approved in accordance with the requirements shown on the Contract Drawings.
b. Testing was performed by an approved testing laboratory.
c. The previously-qualified welding procedure conforms to the requirements of this Section and is applicable to welding conditions encountered under this Contract.
d. The welder, welding operator and tacker qualification tests conform to the requirements of this Section and are applicable to welding conditions encountered under this Contract.

6. Renewal of Qualifications: Requalification of a welder or welding operator shall be required under any of the following conditions:

a. It has been more than 6 months since the welder or welding operator has used the specific welding process for which they are qualified.

b. There is specific reason to question the welder or welding operator's ability to make welds that meet the requirements of these Specifications.

c. The welder or welding operator was qualified by an employer other than those firms performing work under this Contract, and a qualification test has not been taken within the past 12 months. Records showing periods of employment, name of employer where welder, or welding operator, was last employed, and the process for which qualified shall be submitted as evidence of conformance.

d. A tacker who passes the qualification test shall be considered eligible to perform tack welding indefinitely in the positions and with the processes for which they are qualified, unless there is some specific reason to question the tacker's ability. In such a case, the tacker shall be required to pass the prescribed tack welding test.

1.7 SUBMITTALS

A. The Contractor shall prepare and submit Shop Drawings for approval of the Engineer. Submittals shall include, but not be limited to, the following:

1. Erection drawings, and catalog data on welding equipment and materials.
2. Welding procedure specifications.
3. Welding procedure qualifications and test records.
4. Welder, welding operator and tacker qualifications and test records.
5. Records of tests and inspections of installed welds.
6. Testing or inspection agency selection.

PART 2 PRODUCTS

2.1 MATERIALS / EQUIPMENT

A. All welding equipment, electrodes, welding wire and fluxes shall be capable of producing satisfactory welds when used by a qualified welder or welding operator performing qualified welding procedures.

B. All welding equipment and materials shall comply with the applicable requirements of ANSI/AWS D1.1 and ANSI/AWS D1.4.

C. Electrodes for Welding

1. Electrodes for welding aluminum shall comply with the Aluminum Association Specifications and AWS D1.2.
2. Electrodes for welding stainless steel and other metals shall comply with AWS A5.4.
3. Electrodes for welding carbon steel shall comply with AWS A5.5.

PART 3 EXECUTION

3.1 FIELD TESTING / QUALITY CONTROL

A. Supervision

1. All shop and field welding shall be under the immediate supervision of a representative of a standard testing agency or an approved inspection agency reporting directly to, and under the control of, the Engineer.

2. Procedures and techniques for inspection shall be in accordance with the applicable requirements of ANSI/AWS D1.1. The Contractor shall submit the name of such agency to the Engineer for approval before starting work.

3. The costs of all welding inspections and tests shall be borne by the Contractor

4. All welds shall be inspected visually by the Contractor in accordance with Section V of the ASME Code, or D1.1, Clause 6, Table 6.1 as approved by the Engineer.

B. Inspection and Tests

1. The Engineer will make periodic checks of each welder to determine that welds are being made as specified in the approved procedure specifications. Welding speed may be estimated.

2. All welds will receive 100 percent visual inspection to determine weld size and profile, surface cracks, overlap, and undercut.

a. The Contractor shall submit the name of such testing agency to the Commissioner for approval before starting Work.

1) All shop and field welds in structural steel shall be visually inspected by an AWS certified welding inspector, whom shall be approved by the Engineer. The Contractor shall furnish a letter of certification for each welded connection stating that these requirements have been met.

2) The costs of all welding supervision and inspections shall be borne by the Contractor. The Contractor shall engage inspectors to inspect welded connections and to perform tests and prepare test reports.

3) Ten (10) percent of all butt and bevel welds which extend continuously for 24 inches or less will be completely tested in accordance with AWS D1.1, Part B, Radiographic Testing of Welds, Chapter 6. All butt and bevel welds which extend continuously for more than 24 inches will be radiographically spot tested at intervals not exceeding 36 inches.

4) Welds that are required by the Engineer and/or inspectors to be corrected shall be corrected or redone and retested as directed, at the Contractor's expense and to the satisfaction of the Engineer and/or an acceptable independent testing lab.

3. The Engineer reserves the right to perform any additional test on any weld, including liquid penetrant, magnetic particle, radiographic, and ultrasonic. The costs of such testing will be borne by the Contractor if unsatisfactory welds are discovered, or by the Engineer if the welds are satisfactory.

END OF SECTION

SECTION 05 05 23.02 – MISCELLANEOUS METAL FASTENINGS

PART 1 GENERAL

1.1 SUMMARY

A. The Contractor shall furnish all materials, labor, and equipment required to provide all metal fastening in accordance with the Contract Drawings and as specified herein.

1.2 PAYMENT

A. Work performed under this Section shall be paid for as part of work performed in accordance with NYC DEP BWSO Standard Sewer and Water Main Specification Sections 51.11 and 51.71.

1.3 RELATED SECTIONS

A. Section 05 05 23.01 - Welding.

1.4 REFERENCES -

A. Definition:

1. No definition of additional terms is required for this Section.

B. Reference Standards:

1. ASTM International (ASTM)

a. ASTM A 36 - Carbon Structural Steel.

b. ASTM A 307 - Carbon Steel Bolts and Studs, 60,000 psi Tensile Strength.

c. ASTM A 489 - Carbon Steel Lifting Eyes.

d. ASTM A 563 - Carbon and Alloy Steel Nuts.

e. ASTM B 348 - Titanium and Titanium Alloy Bars and Billets.

f. ASTM D 1785 - Standard Specification for Polyvinyl Chloride (PVC) Plastic Pipe, Schedules 40, 80 and 120.

g. ASTM E 488 - Standard Testing Method for Strength of Anchors in Concrete Elements

h. ASTM E 1109 - Test Method for Strength of Power-Actuated Fasteners Installed in Structural Members

i. ASTM E 1512 - Test Method for Testing Bond Performance of Bonded Anchors

j. ASTM F 436 - Specification for Hardened Steel Washers Inch and Metric Dimensions

k. ASTM F 467 - Nonferrous Nuts for General Use.

l. ASTM F 593 - Stainless Steel Bolts; Hex Cap Screws, and Studs.

m. ASTM F 594 - Stainless Steel Nuts.

n. ASTM F 1554 - Specification for Anchor Bolts, Steel, 36, 55 and 105 ksi Inch and Metric Dimensions

o. ASTM F 3125 - Specification for High Strength Structural Bolts, Steel and Alloy Steel, Heat Treated 120 ksi and 150 ksi, Minimum Tensile Strength Inch and Metric Dimensions

2. American Concrete Institute (ACI)

   a. ACI 355.2 - Qualification of Post-Installed Mechanical Anchors in Concrete

   b. ACI 355.4 - Qualification of Post-Installed Adhesive Anchors in Concrete

3. International Code Council – Evaluation Service (ICC-ES)

   a. ICC-ES AC01 - Acceptance Criteria for Expansion Anchors in Masonry Elements

   b. ICC-ES AC58 - Acceptance Criteria for Adhesive Anchors in Masonry Elements

   c. ICC-ES AC60 - Acceptance Criteria for Anchors in Unreinforced Masonry Elements

   d. ICC-ES AC70 - Acceptance Criteria for Fasteners Power-Driven into Concrete, Steel and Masonry Elements

   e. ICC-ES AC106 - Acceptance Criteria for Predrilled Fasteners (Screw Anchors) in Masonry Elements

   f. ICC-ES AC193 - Acceptance Criteria for Mechanical Anchors in Concrete Elements

   g. ICC-ES AC308 - Acceptance Criteria for Post-Installed Adhesive Anchors in Concrete Elements

4. American Welding Society (AWS)

   a. AWS D1.1 - Structural Welding Code - Steel

   b. AWS D1.2 - Structural Welding Code - Aluminum

   c. AWS D 1.6 - Structural Welding Code – Stainless Steel

5. American Society of Mechanical Engineers (ASME)

   a. ASME B 18.2.1 - Square, Hex Bolts, Heavy Hex, and Askew Head Bolts and Hex, Heavy Hex, Hex Flange, Lobed Head and Lag Screws (Inch Series)

   b. ASME B 18.2.2 - Square and Hex Nuts (Inch Series)

   c. ASME B 18. 22.1 - Plain Washers

6. New York City Building Code (NYCBC)

7. NYC Buildings Bulletin 2009-019

8. American Institute of Steel Construction (AISC)

   a. Steel Construction Manual

b. AISC 303 - Code of Standard Practice for Steel Buildings and Bridges

c. AISC 360 - Specification for Structural Steel Buildings

d. RSCS Specification for Structural Joints Using High-Strength Bolts

9. Aluminum Association

a. Specifications for Aluminum Structures.

1.5 DESCRIPTION

A. Not Used

1.6 QUALITY ASSURANCE

A. Fasteners not manufactured in the United States shall be tested and certification provided with respect to specified quality and strength standards. Certifications of origin shall be submitted for all U.S. fasteners supplied on the project. Fasteners to be tested shall be randomly selected by the Engineer in the field.

B. All welding shall be performed by welders certified in accordance with AWS. Certifications of field welders shall be submitted prior to performing any field welds as per Section 05 05 23.01 – Welding. Welding shall comply with, but not limited to the following:

1. AWS D1.1 for Steel

2. AWS D1.2 for Aluminum

3. AWS D1.6 for Stainless Steel.

4. Inadequate welds shall be corrected or redone and retested to the satisfaction of the Engineer, at no additional cost to the City.

C. Fasteners and concrete anchors will be inspected in accordance with the Inspection Article in Part 3.

D. Manufacturer’s load tables and certified performance tests for titanium bolts shall be provided.

1.7 SUBMITTALS

A. The Contractor shall submit Shop Drawings and material specifications for approval by the Engineer. Submittals shall include, but not be limited, to the following:

1. Shop Drawings providing the manufacturer, fastener type, certification of the fastener's material and capacity and product data such as:

a. Product information

b. Technical information

c. Manufacturer’s Installation Instructions (MPII)

d. ICC-ES Evaluation Report.

2. Copy of valid AWS certification for each person who is to perform field welding.

3. Certified weld inspection reports, when required.

4. Adhesive Anchors

   a. For all adhesive anchors, submit anchor sizes and location plan

   b. Testing methods, procedures and equipment.

   c. In the event that any adhesive anchors fail field testing, submit a detailed procedure for the removal and replacement of those anchors.

1.8 DELIVERY, STORAGE, AND HANDLING

A. Materials stored outdoors shall be supported above ground surfaces and protected with approved effective and durable covers.

PART 2 PRODUCTS

2.1 MANUFACTURERS

A. Expansion anchors shall be:

1. Power-Stud wedge expansion anchor as manufactured by Powers Fasteners, Inc., Brewster, NY;

2. Kwik Bolt 3 (KB3) expansion anchor as manufactured by Hilti, Plano, TX;

3. Strong-Bolt 2 Wedge Anchor as manufactured by Simpson Strong-Tie, Pleasanton, CA;

4. Or approved equal.

B. Screw anchors shall be:

1. Type 316 stainless steel KH-EZ screw anchor as manufactured by Hilti, Plano, TX;

2. Type 316 stainless steel Wedge-Bolt screw anchor as manufactured by Powers Fasteners Inc., Brewster, NY;

3. Type 316 stainless steel Titen-HD screw anchor as manufactured by Simpson Strong-Tie, Pleasanton, CA;

4. Or approved equal.

C. Sleeve or drop-in anchors shall be as manufactured by:

1. Hilti Inc., Plano, TX;

2. Powers Fasteners Inc., Brewster, NY;

3. Simpson Strong-Tie, Pleasanton, CA;

4. Or approved equal.

D. Adhesive Dowels and Anchors

1. Epoxy adhesive anchor system shall be:

   a. PE1000+ as manufactured by Powers Fasteners Inc., Brewster, NY;

   b. HIT-RE 500-V3 as manufactured by Hilti, Plano, TX;

c. Or approved equal.

2. Vinylester adhesive anchor system shall be:

a. AC100+ Gold as manufactured by Powers Inc., Brewster, NY;

b. HIT HY-200 as manufactured by Hilti, Plano, TX;

c. A7+ as manufactured by ITW Ramset/Redhead, Glendale Height, IL;

d. AT-XP as manufactured by Simpson Strong-Tie, Pleasnaton, CA;

e. Or approved equal.

E. The wedge inserts shall be as manufactured by:

1. Hohmann & Barnard, Inc., Hauppauge, NY;

2. Or approved equal.

F. Expansion Bolts in Structural Steel Connections shall be:

1. Type HB Hollo-Bolt as manufactured by Lindapter, Syracuse, NY;

2. Or approved equal.

2.2 MATERIALS / EQUIPMENT

A. Anchor Bolts

1. Anchor bolts for equipment attachment shall be of stainless steel Type 316 with nitronic 60 stainless steel nuts and locknuts.

2. All other anchor bolts shall be Type 316 stainless steel with nitronic 60 stainless steel nuts.

3. Pipe sleeves around anchor bolts shall be of the size and configuration shown on the Contract Drawings.

4. Material for anchor bolts submerged in salt water or corrosive liquids for which stainless steel Type 316 is not suitable shall be as indicated in the Contract.

B. Stainless Steel Bolts

1. Stainless steel bolts shall conform to ASTM F593. All fasteners shall be Type 316 stainless steel. Unless otherwise specified, fasteners for aluminum members shall be Type 304 stainless steel. Fasteners for stainless steel members shall be of matching grade.

2. Stainless steel bolts shall have hexagonal heads with a raised letter or symbol on the bolts indicating the manufacturer, and be supplied with hexagonal nuts meeting the requirements of ASTM F594. Nuts shall be of the same alloy as the bolts and shall have a raised letter or symbol indicating the manufacturer.

3. Nuts for stainless steel bolts for elements which are indicated on the Contract Drawings to be removable shall be made of nitronic 60 alloy.

4. Material for bolts submerged in salt water or corrosive liquids for which stainless steel Type 316 is not suitable shall be as indicated in the Contract.

C. Post-Installed Anchors

1. Concrete anchors shall be one of the types listed below as indicated on the Contract Drawings. Unless otherwise noted, all concrete anchors which are submerged, or which are subject to vibration from equipment such as pumps and generators, shall be injected, adhesive anchors. The determination of anchors equivalent to those listed below shall be based on test data performed by a commercial testing laboratory.

    a. Mechanical Anchors

        1) Expansion anchors shall be wedge, sleeve, or drop-in mechanical anchors.

        2) Screw anchors shall be one-piece threaded anchor with a finished hexagonal head.

    b. Adhesive anchors shall be two part injection type.

    c. Where anchor type is not indicated on the Contract Drawings, the wedge expansion anchor shall be used.

2. Expansion anchors shall be fully threaded, medium duty, Type 316 stainless steel anchors. Shall be sized and embedded to depths as shown on the Contract Drawings. If embedment depth is not given, the standard embedment depth as recommended by the manufacturer shall be used.

    a. Manufacturer for Expansion anchor shall be as specified in this Section.

3. Screw anchors shall be a one piece, heavy duty anchor with a finished hexagonal head. Screw anchors shall be sized and embedded to depths as shown on the Contract Drawings. If embedment depth is not given, the standard embedment depth as recommended by the manufacturer shall be used.

    a. Manufacturer for screw anchor shall be as specified in this Section.

4. Adhesive dowels shall consist of Grade 60 reinforcing steel ASTM A 615. Adhesive concrete anchors shall consist of Type 316 stainless steel ASTM F593 or Grade B7 high strength carbon ASTM A193 threaded rods or bolts anchored with a two-part injection type adhesive system into hardened concrete or grout-filled masonry. The adhesive system shall use a two-component adhesive mix and shall be injected with a static mixing nozzle following manufacturer's instructions. The anchor diameter, type, and embedment depth shall be as shown on the Contract Drawings.

    a. The embedment depth of the rod/bolt shall provide a minimum allowable bond strength that is equal to the allowable tensile capacity of the rod/bolt (see Table 1) unless noted otherwise on the Contract Drawings.

    b. Manufacturer for Epoxy adhesive and Vinylester adhesive anchor systems and shall be as specified in this Section.

    c. Adhesive anchoring system shall have an ICC-ES Evaluation Service Report issued in accordance with AC308.

d. Adhesive for the anchors must qualify under ACI 355.4.

Table 1
Allowable Tensile Capacity (Kips) for Standard Manufacturer Embedment

Size	Concrete Anchors Wedge Type	Concrete Anchors with Injection Adhesive System
3/8"	1.3	2.1
1/2"	2.4	3.8
5/8"	3.3	5.9
3/4"	4.8	8.4
7/8"	5.6	11.0
1"	7.1	15.0

5. Concrete anchors shall be of Stainless Steel Type 316 unless noted otherwise. Concrete anchors for stainless steel attachments shall be of matching grade.

6. All concrete anchors exposed to water and waste shall be Type 316 stainless steel and shall have nitronic 60 stainless steel nuts.

7. Material for concrete anchors submerged in salt water or other corrosive liquids for which stainless steel Type 316 is not suitable shall be as indicated in the Contract.

D. Concrete Inserts

1. Wedge Type Inserts:

a. The concrete inserts for attachment of shelf angles or brick relieving angles to the reinforced concrete beams or concrete encased steel beams, shall be wedge type inserts. The inserts shall have an askew head bolt to produce an automatic tightening action when a load is placed on the bolt.

b. The wedge inserts shall be of malleable iron, hot dipped galvanized. The askew bolt and the horseshoe shim plates shall be of stainless steel Type 304 or 316. The type of insert and size of bolts shall be as shown on the Contract Drawings.

c. Manufacturer for wedge inserts shall be as specified in this Section.

E. Eye Bolts

1. Eyebolts shall be of the size indicated on the Contract Drawings and shall conform to ASTM A489 unless noted otherwise.

2. Carbon steel eyebolts shall be galvanized

F. Expansion Bolts in Structural Steel Connections

1. Expansion bolts for connecting to hollow section steel or where access is restricted (blind-bolts) shall be Type 316 stainless steel with a hex head such as specified in this Section.

PART 3 EXECUTION

3.1 EXAMINATION / PREPARATION

A. The Contractor shall field verify all dimensions and condition of the materials to be connected, review the Drawings and report any discrepancies to the Engineer for clarification prior to starting fabrication.

3.2 INSTALLATION

A. Anchor Bolts, Adhesive Anchors and Concrete Anchors:

1. Anchor bolts shall be installed in accordance with AISC "Code of Standard Practice" by setting in concrete while it is being placed and positioned by means of a rigidly held template.

2. The installation of concrete anchors shall be done in strict conformance with the manufacturer's field demonstration and recommendations.

3. The holes drilled for adhesive anchors shall be cleaned by use of a fiber bristle brush and dry compressed air. The anchors shall be supported in the correct position until the adhesive sets and gains enough strength to prevent any dislocation. Adhesive anchors shall not be tightened or loaded until the adhesive has fully cured as recommended by the manufacturer.

4. No concrete anchor shall be installed before base concrete has attained specified 28-day strength.

5. Concrete anchors shall not be used in place of anchor bolts without Engineer's approval.

B. Bolts:

1. Unless otherwise specified, where aluminum and steel members are connected together they shall be fastened with Type 304 stainless steel bolts and isolated with micarta, nylon, rubber, or approved equal.

C. Concrete Inserts: Provide concrete inserts where shown on the Contract Drawings. Inserts shall be firmly held in position in the forms and sealed from intrusion of concrete mortar during concrete placement.

D. Adhesive Dowels and Adhesive Concrete Anchors

1. Concrete is to be a minimum of 21 days old at time of anchor installation

2. Work shall be performed by certified ACI/CRSI Adhesive Anchor Installers under continuous special inspection

3. Shall be installed in accordance with Manufacturer’s Published Installation Instructions (MPII), the applicable ICC-ES ESR and in accordance with NYC Buildings Bulletin 2009-019

4. Adhesive anchoring installation shall be subject to special inspection requirements of NYCBC section BC 1704.32.

5. Adhesive anchor shall be identified by labels on the packaging including manufacturer’s name, product designation and the requirements specified in ICC-ES AC308, Annex A.

E. Welding

1. Welding shall comply with the requirements of Section 05 05 23.01 - Welding.

3.3 FIELD TESTING / QUALITY CONTROL

A. Inspection

1. At least 25 percent of the concrete anchors to be installed shall be proof tested to 1.33 times the allowable load specified by the manufacturer of the system.

2. Welding inspection shall be done in accordance with the requirements of Section 05 05 23.01 - Welding.

3. Adhesive Anchors: Adhesive anchoring installation shall be subject to special inspection requirements of NYCBC section BC 1704.32.

B. Testing of Adhesive Dowels and Adhesive Concrete Anchors

1. Field testing:

a. Testing to be performed by a NYC Buildings Department approved special inspection agency to perform field testing of the installed anchors in accordance with NYCBC BC 1704.32 and ICC-ES ESR and the applicable sections of ASTM E488 in the presence of the Engineer.

b. Anchors that are to be tested are as indicated on the Contract Drawings.

2. Pull-out testing:

a. A total of 15% of the adhesive anchors designated for testing are to be tested and no more than one (1) bolt is to be tested per connection.

b. The Engineer will randomly choose the anchors to be tested.

c. Testing of the adhesive anchors shall not begin until all the anchors are installed.

d. If only one anchor fails, all the adhesive anchors will be accepted. If a second anchor fails, an additional 5% of the anchors shall be tested. If more than 20% of the total anchors tested fail, all the anchors shall be removed and replaced.

3. Removal and replacement of failed test anchors:

a. Remove all anchors that fail the field test without damage to the surrounding concrete.

b. Redrill holes to remove adhesive bonding material residue and clean in accordance with Manufacturer’s Published Installation Instructions (MPII).

c. Reinstall new anchors that are the same size as the removed anchors and install the new anchors in the same exact location as

the removed anchor. Do not reuse the failed anchors, they shall be discarded.

d. Assign reinstalled anchors into batches only containing reinstalled anchors of the same diameter, embedment length and adhesive bonding material system, and field test in accordance with the above sections.

END OF SECTION

SECTION 05 06 00.01 – SCHEDULES FOR STAINLESS STEEL WORK

PART 1 GENERAL

1.1 SUMMARY

A. The Contractor shall furnish, install and erect the stainless steel work as specified herein and shown on the Contract Drawings.

B. Stainless steel work shall be furnished complete with all accessories, mountings and appurtenances of the type of stainless steel and finish as specified or required for a satisfactory installation.

1.2 PAYMENT

A. Work performed under this Section shall be paid for as part of work performed in accordance with NYC DEP BWSO Standard Sewer and Water Main Specification Sections 51.11 and 51.71.

1.3 RELATED SECTIONS

A. Requirements from the following sections also apply to this Section:

1. Section 05 05 23.01 - Welding.

1.4 REFERENCES

A. Definition:

1. No definition of additional terms is required for this Section.

B. Reference Standards:

1. ASTM A193 - Alloy-Steel and Stainless Steel Bolting Materials for High-Temperature Service.
2. ASTM A194 - Carbon and Alloy Steel Nuts for Bolts for High-Pressure and High-Temperature Service.
3. ASTM A262 - Practice for Detecting Susceptibility to Intergranular Attack in Austenitic Stainless Steel.
4. ASTM A276 - Stainless and Heat-Resisting Steel Bars and Shapes.
5. ASTM A314 - Stainless and Heat-Resisting Steel Billets and Bars for Forging.
6. ASTM A380 - Practice for Cleaning and Descaling Stainless Steel Parts, Equipment and Systems.
7. ASTM A473 - Stainless and Heat-Resisting Steel Forgings.
8. ASTM A666 - Austenitic Stainless Steel, Sheet, Strip, Plate and Flat Bar.
9. ASTM F593 - Stainless Steel Bolts, Hex Cap Screws and Studs.
10. ASTM F594 - Stainless Steel Nuts.
11. ASME B1.1 - Unified Inch Screw Thread (UN and UNR Thread Form).

1.5 DESCRIPTION

A. Tests

1. All stainless steel materials including stainless test welds, shall be checked for compliance with tests for susceptibility to intergranular attack. Such tests shall be Practices A, B and E of ASTM A262. Detailed procedures for the tests shall be submitted to the Engineer for approval prior to start of work. Practice A shall be used only for acceptance of materials but not for rejection of materials, and shall be used for screening material intended for testing in Practice B and Practice E. The maximum acceptable corrosion rate under Practice B shall be 0.004 inch per month, rounded off to the third decimal place. If the certified mill report indicates that such test has been satisfactory performed, the fabricator may not be required to repeat the test. Material passing Practice E shall be acceptable.

2. Sample selection for the susceptibility to intergranular attack tests shall be as follows:

   a. One (1) sample per each heat treatment lot for plates and forgings;

   b. One (1) sample per each Welding Procedure Qualification regardless of the joint design;

   c. If tests indicate a reduction in corrosion resistance, welding procedure shall be adjusted or heat treatment determined as needed to restore required corrosion resistance;

   d. The samples so chosen shall have received all the post-weld heat treatments identical to the finished part.

1.6 QUALITY ASSURANCE

A. Shop inspections may be made by the Engineer. The Contractor shall give ample notice to the Engineer prior to the beginning of any stainless steel fabrication work so that inspection may be provided. The Contractor shall furnish all facilities for the inspection of materials and workmanship in the shop, and the inspectors shall be allowed free access to the necessary parts of the works.

B. Inspectors shall have the authority to reject any materials or work which does not meet the requirements specified herein or of the Contract Drawings.

C. Inspection at the shop is intended as a means of facilitating the work and avoiding errors, but is expressly understood that it will in no way relieve the Contractor from the responsibility for furnishing proper materials or workmanship.

1.7 SUBMITTALS

A. The Contractor shall prepare and submit Shop Drawings for all stainless steel fabrication for approval of the Engineer. Submittals shall include, but not be limited to, the following:

1. Certified test reports for susceptibility to intergranular attack.

2. Affidavit of compliance with type of stainless steel shown on the Contract Drawings or specified herein.

3. Certified weld inspection reports.

4. Cleaning and handling of stainless steel in accordance with Article “Cleaning and Handling” in this Section.

B. Samples of finish, on each type of stainless steel to be furnished, shall be submitted in accordance with the Quality Assurance requirements of the Contract.

1.8 DELIVERY, STORAGE, AND HANDLING

A. Mechanical damage (e.g., scratches and gouges) to the stainless steel material can occur during handling. Care shall be taken in the material handling since such mechanical damage will result in the passive oxide film being "punctured" leading to a possible lower resistance to the initiation of corrosion than the surrounding chemically-passivated surface. Corrosion in such areas can be accelerated by the galvanic corrosion effect due to the unfavorable relative area ratios which would exist.

B. Stainless steel plates and sheets shall be stored vertically in racks and not be dragged out of the racks or over one another. Racks shall be protected to prevent iron contamination.

C. Heavy stainless steel plates shall be carefully separated and chocked with wooden blocks so that the forks of a fork-lift could be inserted between plates without mechanically damaging the surface.

D. Stainless steel plates and sheets laid out for use shall be off the floor and be divided by wooden planks to prevent surface damage and to facilitate subsequent handling.

E. Plate clamps, if used, shall be used with care as the serrated faces can dig in, indent and gouge the surface.

F. Stainless steel fabrications shall be loaded in such a manner that they may be transported and unloaded without being overstressed, deformed or otherwise damaged.

G. Stainless steel fabrications and packaged materials shall be protected from corrosion and deterioration and shall be stored in a dry area. Materials stored outdoors shall be supported above ground surfaces on wood runners and protected with approved effective and durable covers.

H. Stainless steel fabrications shall not be placed in or on a structure in a manner that might cause distortion or damage to the fabrication. The Contractor shall repair or replace damaged stainless steel fabrications or materials as directed by the Engineer.

PART 2 PRODUCTS

2.1 MATERIALS / EQUIPMENT

A. Materials and Finishes

1. Type and finish of stainless steel to be utilized for fabrication shall be the type and finish indicated on the Contract Drawings or as specified herein for the intended service and conforming to the applicable ASTM standard.

2. The basic mill forms (sheet, strip, plate and bar) are classified by size as shown on Table 1. Tables 2, 3 and 4 identify finishes and conditions in which sheet, bar and plate are available.

3. Tables 2, 3 and 4 show numbered finishes and conditions for sheet, bar and plate. While there are no specific designations for polished finishes on bar or plate, the sheet finish designations are used to describe the desired effect. This also applies to finishes on ornamental tubing.

4. There are three standard finished for strip, which are broadly described by the finishing operations employed:

   a. No. 1 Strip Finish is approximately the same as No. 2D Sheet Finish. It varies in appearance from dull gray matte to a fairly reflective surface, depending largely on alloy composition and amount of cold reduction.

   b. No. 2 Strip Finish is approximately the same as a No. 2B sheet finish. It is smoother, more reflective than No. 1, and likewise varies with alloy composition.

   c. Bright annealed finish is a highly reflective finish that is retained by final annealing in a controlled atmosphere furnace.

Table 1 - Classification of Stainless Steel Product Form

Item	Description	Dimensions		
		Thickness	Width	Diameter or Size
Sheet	Coils and cut length: Mill finishes Nos. 1, 2D and 2B Polished finishes Nos. 3, 4, 6, 7 & 8	 under 3/16" under 3/16"	24" and over all widths	 -- --
Strip	Cold finished, coils or cut lengths Polished finishes Nos. 3, 4, 6,7 & 8	under 3/16" under 3/16"	under 24" all widths	-- --
Plate	Flat rolled or forged	3/16" and over	over 10"	--
Bar	Hot finished rounds, squares, octagons and hexagons Hot finished flats Cold finished rounds, squares, octagons and hexagons Cold finished flats	-- 1/8" to 8" incl. -- 1/8" to 4-1/2"	-- 1/4" to 10" incl. -- 3/8" to 4-1/2"	1/4" and over -- over 1/8" --
Wire	Cold finishes only: (in coil) Round, square, octagon, hexagon and flat wire	under 3/16"	under 3/8"	--
Pipe & Tubing	Several different classifications, with differing specifications, are available.			
Extrusion	Not considered “standard” shapes. Currently limited in size to approximately 6-1/2" diameter or structurals.			

Table 2 - Standard Mechanical Sheet Finishes

Unpolished or Rolled Finishes: No. 1 A rough dull surface which results from hot rolling to the specified thickness followed by annealing and descaling.	No. 4 A polished surface obtained by finishing with a 120-150 mesh abrasive, following initial grinding with coarser abrasives. This is a general purpose bright finish with a visible "grain" which prevents mirror reflection.
No. 2D A dull finish which results from cold rolling followed by annealing and descaling, and may perhaps get a final light roll pass through unpolished rolls. A 2D finish is used where appearance is of no concern.	No. 6 A dull satin finish having lower reflectivity than No. 4 finish. It is produced by Tampico brushing the No. 4 finish in a medium of abrasive and oil. It is used for architectural applications and ornamentation where a high luster is undesirable, and to contrast with brighter finishes.
No. 2B A bright cold-rolled finish resulting in the same manner as No. 2D finish, except that the annealed and descaled sheet receives a final light roll pass through polished rolls. This is the general purpose cold-rolled finish that can be used as is, or as a preliminary step to polishing.	No. 7 A high reflective finish that is obtained by buffing finely ground surfaces but not to the extent of completely removing the "grit" lines. It is used chiefly for architectural and ornamental purposes.
Polished Finishes: No. 3 An intermediate polish surface obtained by finishing with a 100 grit abrasive. Generally used where a semi-finished polished surface is required. A No. 3 finish usually receives additional polishing during fabrication.	No. 8 The most reflective surface, which is obtained by polishing with successively finer abrasives and buffing extensively until all grit lines from preliminary grinding operations are removed. It is used for applications such as mirrors and reflectors.

Table 3 - Conditions and Finishes for Bar

Conditions	Surface Finishes[1]
Hot worked only	(a) Scale not removed (excluding spot conditioning) (b) Rough turned[2] (c) Pickled or blast cleaned and pickled.

Conditions	Surface Finishes[1]
Annealed or otherwise heat treated.	(a) Scale not removed (excluding spot conditioning) (b) Rough turned (c) Pickled or blast cleaned and pickled (d) Cold drawn or cold rolled (e) Centerless ground (f) Polished
Annealed and cold worked to high tensile strength[3]	(d) Cold drawn or cold rolled (e) Centerless ground (f) Polished

Table 4 - Conditions and Finishes for Plate

Conditions	Surface Finishes[1]
Hot worked only	(a) Scale not removed (excluding spot conditioning) (b) Rough turned[2] (c) Pickled or blast cleaned and pickled.
Annealed or otherwise heat treated.	(a) Scale not removed (excluding spot conditioning) (b) Rough turned (c) Pickled or blast cleaned and pickled (d) Cold drawn or cold rolled (e) Centerless ground (f) Polished
Annealed and cold worked to high tensile strength[3]	(d) Cold drawn or cold rolled (e) Centerless ground (f) Polished

Condition and Finish	Description and Remarks
Hot rolled	Scale not removed. Not heat treated. Plates not recommended for final use in this condition.[4]
Hot rolled, annealed or heat treated	Scale not removed. Use of plates in this condition is generally confined to heat resisting applications. Scale impairs corrosion resistance.[1]
Hot rolled, annealed or heat treated, blast cleaned or pickled	Condition and finish commonly preferred for corrosion resisting and most heat resisting applications.
Hot rolled, annealed, descaled and temper passed	Smoother finish for specialized applications.

Condition and Finish	Description and Remarks
Hot rolled, annealed, descaled cold rolled, annealed, descaled, optionally temper passed	Smooth finish with greater freedom from surface imperfection than the above.
Hot rolled, annealed or heat treated, surface cleaned and polished	Polished finishes refer to Table 2.
Notes: 1. Surface finishes (b), (e) and (f) are applicable to round bars only. 2. Bars of the 4xx series stainless steels which are highly hardenable, such as Types 414, 420, 420F, 431, 440A, 440B and 440C, are annealed before rough turning. Other hardenable grades, such as Types 403, 410, 416 and 416Se, may also require annealing depending on their composition and size. 3. Produced in Types 302, 303Se, 304 and 316. 4. Surface inspection is not practicable on plates which have not been pickled or otherwise descaled.	

B. Fasteners

1. Stainless steel fasteners shall be used for joining stainless steel work.
2. Stainless steel fasteners shall be made of alloys that are equal to or more corrosion resistant than the materials they join.

2.2 FABRICATION / ASSEMBLING / FINISHES

A. Fabrication

1. Holes for bolts and screws shall be drilled. Fastenings shall be concealed where practicable. Joints exposed to the weather shall be formed to exclude water.
2. As far as practicable, all fabricated units shall be fitted and assembled in the shop, with all cuts and bends made to precision measurements in accordance with details shown on approved shop drawings.
3. Work shall be fabricated so that it is installed in a manner that will provide for expansion and contraction, prevent the shearing of bolts, screws and other fastenings, ensure rigidity, and provide close fitting of sections.
4. All finished and/or machined faces shall be true to line and level. Stainless steel sections shall be well formed to shape and size with sharp lines and angles; curved work shall be sprung evenly to curves.
5. All work shall be fitted together at the shop as far as possible, and delivered complete and ready for erection. Proper care shall be exercised in handling all work so as not to injure the finished surfaces.

PART 3 EXECUTION

3.1 EXAMINATION / PREPARATION

A. Field Measurements

1. The Contractor shall verify all dimensions and shall make any field measurements necessary and shall be fully responsible for accuracy and layout of the work.

2. The Contractor shall review the Contract Drawings and any discrepancies shall be reported to the Engineer for clarification prior to starting fabrication.

3.2 IMPLEMENTATION

A. Installation

1. All stainless steel fabrications shall be erected square, plumb and true, accurately fitted, adequately anchored in place, set at proper elevations and positions.

2. All inserts, anchor bolts and all other miscellaneous work specified herein or shown on the Contract Drawings or required for the proper completion of the work, which are embedded in concrete, shall be properly set and securely held in position in the forms before the concrete is placed.

3. All stainless steel fabrications shall be installed in conformance with details shown on the Contract Drawings or on the approved shop drawings.

B. Welding

1. Welding shall be done in a manner that will prevent buckling and in accordance with Section 05 05 23.01 - Welding, and as modified hereinafter. Field welding of stainless steel is not permitted.

2. All welds exposed in the work shall be ground smooth and finished to match the finish of the adjacent stainless steel surfaces.

3. Select weld rods that provide weld filler metal having corrosion resistant properties as nearly identical or better than the base metal to insure preservation of the corrosion-resistant properties. Provide heat treatment at welds where testing of weld procedure indicates it is required to restore the corrosion resistance.

4. Thermal conductivity of stainless steel is about half that of other steels; and the following methods may be used to accommodate this situation:

   a. Use lower weld current setting.

   b. Use skip-weld techniques to minimize heat concentration.

   c. Use back-up chill bars or other cooling techniques to dissipate heat.

5. Edges of the stainless steel to be welded shall be cleaned of contaminants.

C. Cleaning and Handling

1. All stainless steel surfaces shall be precleaned, descaled, passivated and inspected before, during and after fabrication in accordance with the applicable sections of ASTM A380 and as detailed in the procedures to be submitted to the Engineer for approval prior to start of work. Degreasing

and passivation of stainless steel articles shall be conducted as the last step after fabrication.

2. Measures to protect cleaned surfaces shall be taken as soon as final cleaning is completed and shall be maintained during all subsequent handling, storage and shipping.

   a. The Contractor shall submit for approval specific procedures listing all the steps to be followed in detecting contamination and in descaling, cleaning, passivation and protecting of all stainless steel.

   b. Area showing clear indications of contamination shall be recleaned, repassivated and reinspected.

3. At approved stages in the shop operations, contaminants such as scale, embedded iron, rust, dirt, oil, grease and any other foreign matter shall be removed from the metal, as directed or approved by the Engineer. The adequacy of these operations shall be checked by the Engineer. Operations in the shop shall be conducted so as to avoid contamination of the stainless steel and to keep the metal surfaces free from dirt and foreign matter.

4. In order to prevent incipient corrosion during fabrication, special efforts shall be made at all times to keep all stainless steel surfaces from coming in contact with other metals.

   a. Stainless steel and stainless steel welds shall be cleaned with clean sand, stainless steel wool, stainless steel brushes, or other approved means and shall be protected at all times from contamination by any materials, including carbon steel, that shall impair its resistance to corrosion.

   b. Approved methods of cutting grinding and handling shall be used to prevent contamination. If air-arc, or carbon-arc cutting is used, additional metal shall be removed by approved mechanical means so as to provide clean, weldable edges. All grinding of stainless steel shall be performed with aluminum oxide or silicon carbide grinding wheels bonded with resin or rubber. Grinding wheels used on carbon steel shall not be used on stainless steel.

   c. Sand, grinding wheels, brushes and other materials used for cleaning stainless steel shall be checked periodically by the Engineer for contaminants. Cleaning aids found to contain contaminants shall not be used on the work.

END OF SECTION

SECTION 05 50 00 – METAL FABRICATIONS

PART 1 GENERAL

1.1 SUMMARY

A. The Contractor shall furnish, fabricate and install all metal fabrications not specifically included in other Sections and required for the completion of the work as shown on the Contract Drawings and as specified herein.

B. Metal fabrications shall be provided complete with all accessories, base attachments, fastenings and other appurtenances as specified and as may be required for a satisfactory installation.

C. Unless otherwise shown, specified or required, design, workmanship and erection shall conform to or exceed the applicable requirements of the documents listed hereinafter in Article 1.04 to the extent that the provisions of such documents are not in conflict with the requirements of this Section.

1.2 PAYMENT

A. Work performed under this Section shall be paid for in accordance with NYC DEP BWSO Standard Sewer and Water Main Specification Sections 51.11 and 51.71

1.3 RELATED SECTIONS

A. Requirements from the following sections also apply to this Section:

1. Section 05 05 23.01 - Welding
2. Section 05 05 23.02 - Miscellaneous Metal Fastenings
3. Section 05 06 00.01 - Schedules for Stainless Steel Work
4. Section 05 52 13.05 - Welded Pipe Railings (Stainless Steel)
5. Section 05 53 01.02 - Stainless Steel Floor Gratings

1.4 REFERENCES

A. Definition:

1. No definition of additional terms is required for this Section.

B. Reference Standards:

1. ASTM A36 - Structural Steel.
2. ASTM A48 - Gray Iron Castings.
3. ASTM A276 - Stainless and Heat-Resisting Steel Bars and Shapes.
4. ASTM A480 - General Requirements for Flat-Rolled Stainless and Heat-Resisting Steel Plates, Sheet and Strips.
5. ASTM A666 - Austenitic Stainless Steel, Sheet, Strip Plate and Flat Bar.
6. ASTM B209 - Aluminum and Aluminum-Alloy Sheet and Plate.
7. ASTM B221 - Aluminum-Alloy Extruded Bars, Rods, Wire, Shapes and Tubes.

8. ASTM B308 - Aluminum-Alloy 6061-T6 Standard Structural Profiles.
9. ANSI/AWS D1.1 - Structural Welding Code.
10. ANSI/AWS D1.2 - Structural Welding Code - Aluminum.
11. New York City Building Code (NYBC).
12. American Institute of Steel Construction (AISC).
13. AISC Manual of Steel Construction.
14. AISC Specification for Design and Fabrication of Structural Steel for Buildings Including the Commentary.
15. Aluminum Association Specifications for Aluminum Constructions.
16. Aluminum Company of America, "Welding and Brazing Aluminum".
17. Occupational Safety and Health Administration (OSHA), U.S. Department of Labor.

1.5 DESCRIPTION

A. Not Used

1.6 QUALITY ASSURANCE

A. Shop inspections may be made by the Engineer's representatives. The Contractor shall give ample notice to the Engineer prior to the beginning of any fabrication work so that inspection may be provided. The Contractor shall furnish all facilities for the inspection of materials and workmanship in the shop, and the inspectors shall be allowed free access to the necessary parts of the works.

B. Inspectors shall have the authority to reject any materials or work which does not meet the requirements of these Specifications.

C. Inspection at the shop is intended as a means of facilitating the work and avoiding errors, but is expressly understood that it will in no way relieve the Contractor from the responsibility for furnishing proper materials or workmanship under this Section. Design of Members and Connections

1. All details shown are typical; similar details shall apply to similar conditions, unless otherwise shown or specified. Dimensions shall be verified at the site without causing delay in the work.

D. For temporary works, complete design calculation and Shop Drawings shall be prepared, signed and stamped with the seal of a Licensed Professional Engineer, licensed to practice in the State of New York and recognized as an expert in the required work unless the design and details have been shown on the Contract Drawings.

E. "Pencil-line" thin butt joints shall be provided.

F. Shop Assembly: Items in the shop shall be preassembled to the greatest extent possible, so as to minimize field splicing and assembly of units at the site. Units shall be disassembled only to the extent necessary for shipping and handling limitations. Units shall be clearly marked for reassembly and coordinated installation.

1.7 SUBMITTALS

A. The Contractor shall submit Shop Drawings and other materials for the approval of the Engineer. Shop drawings shall include, but not be limited to, the following:

1. Layout drawings shall indicate all structural shapes, sizes and dimensions.
2. Certifications, schedules, design calculations, detailed drawings, plans, elevations, and details of sections and connections
3. Detail drawings shall indicate jointing and anchoring details.
4. Anchor bolts and setting plans
5. Erection drawings

B. No fabrication shall be started until Shop Drawings have been approved by the Engineer.

C. The following shall also be submitted:

1. Manufacturer's specifications, load table, installation instructions, setting drawings and templates for location and installation of miscellaneous metal items, appurtenances and anchorage devices.
2. Certified weld inspection reports.

D. The following samples shall be furnished: Representative samples of bolts, anchors and inserts as requested by the Engineer. The review shall be for type and finish only. Compliance with all other requirements shall be the exclusive responsibility of the Contractor.

E. Record Drawings: During progress of the work, an up to date set of drawings showing Field and Shop Drawing modifications shall be kept. Immediately upon completion of work, Record Drawings showing the actual in-place installation of all work constructed and/or installed under this Section shall be provided. Drawings shall include all necessary plans, sections and details, with all reference dimensions and elevations required for complete Record Drawings of the work.

1.8 DELIVERY, STORAGE, AND HANDLING

A. Metal fabrications shall be handled in such a manner that they may be transported and unloaded without being over-stressed, deformed or otherwise damaged.

B. Metal fabrications and packaged materials shall be protected from corrosion and deterioration and shall be stored in a dry area. Materials stored outdoors shall be supported above ground surfaces on wood runners and protected with effective and durable covers approved by the Engineer.

C. Metal fabrications shall not be placed in or on a structure in a manner that might cause distortion or damage to the fabrication. The Contractor shall repair or replace damaged metal fabrications or materials as directed by the Engineer.

D. Materials shall be delivered to the site at such intervals to insure uninterrupted progress of the work. Anchor bolts and anchorage devices, which are to be embedded in cast-in-place concrete or masonry shall be delivered, in ample time not to delay that work.

PART 2 PRODUCTS

2.1 MANUFACTURERS

A. Floor access hatch shall be as manufactured by:

1. USF Fabrication, Inc., Hialeah, FL;
2. Acudor Products, Inc., Fairfield, NJ;
3. Presey Corporation, Wassaic, NY
4. Or approved equal.

2.2 MATERIALS / EQUIPMENT

A. Materials

1. Stainless steel shapes and plate shall be Type 316 stainless steel for bolted constructions and 316L for welded construction as detailed on the Contract Drawings and conforming to the applicable requirements of Section 05 06 00.01 - Schedules for Stainless Steel Work. Shapes shall conform to ASTM A276. Stainless steel plates shall conform to ASTM A480 and ASTM A666.
2. Bolting hardware shall be as specified in Section 05 05 23.02 - Miscellaneous Metal Fastenings.
3. Concrete anchors shall be as specified in Section 05 05 23.02 - Miscellaneous Metal Fastenings.
4. Frames and covers shall be of cast iron, unless otherwise shown on the contract plans, complying with the requirements of Section 22.01, Type 1. Malleable iron or cast steel covers, when required, shall comply with the requirements of Section 22.01 and Section 22.04 of the NYC DEP BWSO Standard Sewer and Water Main Specifications
5. Steps shall be cast iron and shall comply with the requirements of Section 22.01, Type 1, or shall be copolymer polypropylene plastic manhole steps with one-half (1/2) inch Grade 60 steel reinforcement and shall comply with the Sewer Design Standards.

B. Access Stairs, Ship Ladders and Platforms

1. Platforms, associated access stairs and ship ladders shall have stainless steel structural members, stainless stair treads, and stainless platform gratings as specified herein unless shown otherwise on the Contract Drawings.
2. Structural stainless steel sections shall conform to ASTM A276 and all work shall conform to the AISC Manual of Steel Construction.
3. Stainless steel platform and stair tread gratings pattern shall be as specified in Section 05 53 01.02 – Stainless Steel Floor Gratings. Stair treads shall be designed to support a uniform live load of 175 pounds per square foot with a maximum deflection of 1/240 of the span.
4. Stainless steel platform grating shall be designed for the loads as specified herein or as shown on the Contract Drawings.

5. Stainless steel handrails shall be as specified under Section 05 52 13.05 - Welded Pipe Railings (Stainless Steel) and shall be coordinated with stair, ship ladder and platform fabrication. Handrail attachment to stairs, ship ladders and platform shall be in accordance with the details shown on the Contract Drawings.

C. Floor Access Hatches

1. Floor access hatches shall be double leaf, Type JD hatches except for openings less than 4 feet long which shall have single leaf hatches Type J. Manufacturer for floor access hatch shall be as specified in this Section.

2. Hatch size shall be as shown on the Contract Drawings. Hatch leaf shall be water-tight made of stainless steel diamond-pattern plate designed to withstand a live load as indicated on the Contract Drawings for the adjacent floor or deck area. Channel or tee type frame shall be of stainless steel with an anchor flange around the perimeter. All access hatches as indicated on the drawings shall be provided with recessed handles and shall be provided with automatic hold-open arm with a release handle.

3. All hardware shall be of stainless steel and shall include heavy forged hinges, spring operators, an automatic hold-open arm with release handle, and a snap lock with removable handle. The location of hinges, hold-open arm with release handle shall be as shown on the Contract Drawings and/or approved by the Engineer

4. Double leaf doors shall be provided with safety bars to go across the open sides of the door, when in the open position. Brackets shall be provided on the underside of the doors to hold the safety bars when not in use.

5. Access hatches supporting floor loads shall be detailed and fabricated based on calculations indicating that they comply with New York City Building Code for the loading designated on the Contract Drawings for the adjacent floor area. If no loading is designated, a minimum design load of 300 pounds per square foot shall be used or as required for the intended use.

6. If the access doors are located in areas subject to vehicular traffic, they shall be designed for HS-20 loading.

D. Stainless Steel Lintels and Shelf Angles

1. Lintels and shelf angles shall be bent or rolled angles, fabricated of stainless steel Type 316. All angles shall conform to the sizes, shapes, dimensions and details as noted on the Contract Drawings. The lintels assembled by welding shall be fabricated of stainless steel Type 316L.

2. All mounting and assembly hardware shall be Type 316 stainless steel.

E. Anchor Bolts

1. Anchor bolts shall be as specified in Section 05 05 23.02 - Miscellaneous Metal Fastenings.

F. Vertical Ladders

1. Aluminum ladders shall be fabricated from aluminum 6061-T6 as detailed on the Contract Drawings.

2. Stainless steel ladders shall be fabricated from Type 316L stainless steel as detailed on the Contract Drawings.

3. Wall mounted ladders shall have welded brackets attached to the wall with concrete or masonry anchors.

4. Ladders shall comply with OSHA 1910.27.

5. Safety cages or fall prevention system shall be required on all ladders exceeding twenty feet height between landings.

6. The third rail required for the fall prevention system shall be of the same material as the ladder.

G. Fall Prevention System

1. All ladders shall be provided with a fall prevention system.

2. The fall prevention system shall be the RTC 2000 Climb-Rite System as manufactured by:

a. The Research and Trading Corporation.

b. Saf-T-Climb as manufactured by the Norton Company/Air Space Devices, Inc., Cerritos, California.

c. Or approved equal.

3. All necessary components shall be furnished, including two safety belts for each fall prevention installation to provide a complete and fully operational fall prevention system. Safety belts shall fit a waist range from 23 inches to 54 inches.

H. Rung Ladder

1. All metal ladder rungs must have a minimum diameter of three-fourths inch. The distance between rungs, cleats, and steps of fixed ladders cannot to exceed 12 inches and have to be uniform throughout the length of the ladder. The minimum clear length of rungs or cleats shall be 16 inches

2.3 FABRICATION / ASSEMBLING / FINISHES

A. Fabrication of steel and stainless steel shall be in accordance with the Specification for the Design Fabrication and Erection of Structural Steel for Building of the AISC. Fabrication of aluminum shall be in accordance with the Aluminum Association Specifications for Aluminum Structures.

B. Holes for bolts and screws shall be drilled. Fastenings shall be concealed where practicable. Joints exposed to the weather shall be formed to exclude water.

C. As far as practicable, all fabricated units shall be fitted and assembled in the shop, with all cuts and bends made to precision measurements in accordance with details shown on approved shop drawings.

D. Work shall be fabricated so that it is installed in a manner that will provide for expansion and contraction, prevent the shearing of bolts, screws and other fastenings, ensure rigidity, and provide close fitting of sections.

E. Welding of carbon and low alloy steel shall conform to the applicable requirements of ANSI/AWS D1.1, and Section 05 05 23.01 - Welding. Welding of aluminum shall

conform to the applicable recommendations of the Aluminum Company of America publication, "Welding and Brazing Aluminum"; ANSI/AWS D1.2 and Aluminum Association Specification for Aluminum Constructions. Welding shall be done in a manner that will prevent permanent buckling and all welds exposed in the finished work shall be ground smooth.

F. All finished and/or machined faces shall be true to line and level. Steel and aluminum shall be standard, and well finished. Sections shall be well formed to shape and size with sharp lines and angles; curved work shall be sprung evenly to curves.

G. All work shall be fitted together at the shop as far as possible, and delivered complete and ready for erection. Proper care shall be exercised in handling all work so as not to damage the finished surfaces

PART 3 EXECUTION

3.1 EXAMINATION / PREPARATION

A. Field Measurements

1. The Contractor shall verify all dimensions and shall make any field measurements necessary and shall be fully responsible for accuracy and layout of the work.

2. The Contractor shall review the Contract Drawings and any discrepancies shall be reported to the Engineer for clarification prior to starting fabrication.

B. Inspection

1. The Contractor shall examine the alignment of the substrate and conditions under which metal fabrications work is to be performed and notify the Engineer in writing of unsatisfactory conditions. Do not proceed with the metal fabrication and installation work until unsatisfactory conditions have been corrected in a manner acceptable to the Engineer.

3.2 IMPLEMENTATION

A. Installation

1. All metal fabrications shall be erected square, plumb and true, accurately fitted, adequately anchored in place, set at proper elevations and positions.

2. All inserts, anchor bolts and all other miscellaneous metal work specified herein or shown on the Contract Drawings or required for the proper completion of the work, which are embedded in concrete, shall be properly set and securely held in position in the forms before the concrete is placed.

3. All miscellaneous metal fabrications shall be installed in conformance with details shown on the Contract Drawings or on the approved shop drawings.

END OF SECTION

SECTION 05 52 13.05 – WELDED PIPE RAILINGS (STAINLESS STEEL)

PART 1 GENERAL

1.1 SUMMARY

A. This Section describes the requirements for stainless steel welded pipe railing. Stainless steel welded pipe railing and auxiliary system components shall be provided as specified herein and in the Contract; and as shown on the Contract Drawings. Contractor shall provide all labor, materials, tools, equipment and incidentals as shown, specified and required to furnish and install all stainless steel welded pipe railing.

B. Unless otherwise shown or specified, stainless steel welded pipe railing shall consist of a system of two rails welded to posts spaced not more than 5 feet 0 inches on center and a system of handrails supported from adjacent construction by mounting brackets spaced at not more than 5 feet 0 inches on center.

1.2 PAYMENT

A. Work performed under this Section shall be paid for as part of work performed in accordance with NYC DEP BWSO Standard Sewer and Water Main Specification Sections 51.11 and 51.71.

1.3 RELATED SECTIONS

A. Requirements from the following sections also apply to this Section:

1. Section 05 05 23.02 - Miscellaneous Metal Fastenings
2. Section 05 06 00.01 - Schedules for Stainless Steel Work

1.4 REFERENCES

A. Reference Standards:

1. NYCBC - New York City Building Code
2. ASTM A 276 - Stainless Steel Bars and Shapes, Standard Specification for
3. ASTM A 554 - Welded Stainless Steel Mechanical Tubing, Standard Specification for
4. ASTM A 666 - Annealed or Cold-Worked Austenitic Stainless Steel Sheet, Strip, Plate and Flat Bar, Standard Specification for
5. ASTM C 1107 - Packaged Dry, Hydraulic-Cement Grout (Non-shrink), Standard Specification for
6. ASTM E 329 - Agencies Engaged in the Testing and/or Inspection of Materials Used in Construction, Standard Specification for
7. ASTM E 488 - Strength of Anchors in Concrete and Masonry Elements, Standard Test Method for
8. ASTM E 548 - General Criteria Used for Evaluating Laboratory Competence, Standard Guide for
9. ASTM E 894 - Anchorage of Permanent Metal Railing Systems and Rails for Buildings, Standard Test Method for

10. ASTM E 935 - Performance of Permanent Metal Railing Systems and Rails for Buildings, Standard Test Methods for
11. ASTM E 985 - Permanent Metal Railing Systems and Rails for Buildings, Standard Specification for
12. ASTM F 593 - Stainless Steel Bolts, Hex Cap Screws and Studs, Standard Specification for
13. ASTM F 594 - Stainless Steel Nuts, Standard Specification for
14. ANSI/AWS - Structural Welding Code D1.1
15. AWS A 5.12 - Tungsten and Tungsten Alloy Electrodes for Arc Welding and Cutting
16. AWS - Standard Codes for Arc and Gas Welding in Building Construction
17. ANSI A 1264.1 - Safety Requirements for Workplace Floor and Wall Openings, Stairs and Railing Systems
18. AMP 521-01 (R2012) - Architectural Metal Products Division of The National Association of Architectural Metal Manufacturers. Pipe Railing Systems Manual
19. ASTM A 312 - Seamless and Welded Austenitic Stainless Steel Pipes, Standard Specification for
20. 29 CFR 1910.23 - Guarding Floor and Wall Openings And Holes

1.5 DESCRIPTION

A. Not Used

1.6 QUALITY ASSURANCE

A. Manufacturer Qualifications:

1. Engage a single fabricator, with undivided responsibility for detailing and performance of the stainless steel welded railing systems.
2. Engage a firm which can show minimum of three years previous successful experience in detailing and fabrication of stainless steel welded pipe railing systems of scope and type similar to the required work.
3. Materials and fabrication procedures shall be subject to inspection and tests in the mill, shop, and field, conducted by a qualified inspection agency in compliance with ASTM E329 and ASTM E548. Such inspections and tests shall not relieve the Contractor of responsibility for providing materials and fabrication procedures in compliance with specified requirements.

B. Installer Qualifications:

1. Engage a single installer skilled, trained and with successful and documented experience in the installation of stainless steel welded pipe railing systems and with specific skill and successful experience in the erection of the types of materials required; and who agrees to employ only tradesmen with specific skill and successful experience in this type of work. Submit names and qualification to Engineer along with the following information on a minimum of three successful projects:

a. Names and telephone numbers of owner, architects or engineers responsible for projects.

b. Approximate contract cost of the stainless steel welded pipe railing.

c. Amount of area installed.

C. Performance Criteria:

1. Maintain the visual design concept shown, and the technical requirements specified, including modules, profiles, alignment of components and requirements for finish.

2. Contractor shall provide stainless steel welded pipe handrail and railing system that conforms to the City of New York Building Code, ASTM E985 and CFR 29, Part 1910.23, including the 200 pound loading requirement, and including the requirement that specific types of occupancies and sizes of contributing protected areas shall incorporate greater design load resistance into welded pipe railing system, in compliance with ASTM E985, than that specified herein.

a. Completed handrail and railing shall withstand a uniform lateral force of 50 pounds per linear foot and a vertical uniform downward force of 50 pounds per linear foot, both applied simultaneously at the top of the handrail and railing, performance tested in accordance with Test Method A and B of ASTM E935.

b. Intermediate and bottom rails shall withstand simultaneously applied lateral uniform forces of 40 pounds per linear foot and a vertical load of 50 pounds per linear foot, however, lateral and vertical loads on intermediate and bottom railings need not be considered in the detailing and fabrication of posts and anchorages.

c. For railings having solid panels or picket balusters, the panels or picket balusters shall be detailed and fabricated to withstand a uniform lateral load of 50 pounds distributed over any round or square area of one square foot located anywhere within the infill area or a 50 pound per foot penetration cone, performance tested in accordance with Test Method C and D of ASTM E 935.

d. Concentrated 200 pound load and uniform force conditions shall not be applied simultaneously.

e. Other pertinent requirements ceded to ANSI A1264.1 by governing authorities having jurisdiction at the Site.

f. Bending stresses shall not exceed 75 percent of the yield stress of the material. Applied loads shall not produce permanent residual deformation in the completed work when loads are removed. Load-deformation data shall be determined in accordance with ASTM E935.

g. Maximum allowable deflections shall be in accordance with ASTM E985.

h. Where no computations provide the needed information, testing, in compliance with ASTM E935, shall be performed for verification that

stainless steel welded pipe railing system and auxiliary system components comply with specified performance requirements and the requirements of governing authorities having jurisdiction.

3. Thermal Control: Provide adequate expansion within the fabricated system that allows for a thermal expansion and contraction caused by a material temperature range of 140 degrees F to -20 degrees F without warp or bow of system components. Distance between expansion joints shall be based on providing a 1/4 inch wide joint at 70 degrees F which accommodates a movement of 150 percent of the calculated amount of movement for the specified temperature range.

4. Provide expansion joints in handrail and railing system Work where systems cross expansion joints in structure.

5. Configuration of all stainless steel welded pipe handrail and railing systems shall be as shown on the Contract Drawings. All details shown on the Contract Drawings are typical; similar details apply to similar conditions, unless specifically noted otherwise on the Contract Drawings. Verify dimensions at the site without causing delay in the work.

6. Manufacturer is responsible for detailing of stainless steel welded pipe handrail and railing system.

D. Anchors and Supports:

1. Anchorage system shall be structurally analyzed based on results of tests in compliance with ASTM E488 and ASTM E894. Anchors shall be tested for static, seismic, fatigue and shock loadings in series. Static tests shall include tension, shear, flexure, and torsion load resistance.

2. When the size, length or load carrying capacity of an anchor bolt, concrete anchor or concrete insert is not shown on the Contract Drawings, provide the size, length and capacity required to carry the design load times a minimum safety factor of four when installed in cast-in-place concrete and a minimum safety factor of six when installed in unit masonry construction.

3. Sizes shown on the Contract Drawings shall be considered minimum.

1.7 SUBMITTALS

A. The Contractor shall submit Shop Drawings for approval of the Engineer. Submittals shall include, but not be limited, to the following:

B. Samples:

1. Full size sample, 2 foot - 0 inches long, of assembled stainless steel welded pipe railing system at post and rail intersections with all associated components including typical welded connections, mounted toe-board and sleeve, and handrail complete with mounting brackets all with specified controlled uniform finish.

2. Samples will be reviewed by City for color, finish, joinery appearance and workmanship only. Compliance with all other requirements is the responsibility of Contractor.

C. Shop Drawings:

1. Drawings for the fabrication and erection of stainless steel welded pipe railing and handrail systems with sizes of members, components and anchorage devices, all based on specified requirements

2. Include copies of manufacturer's specifications, standard and custom detail drawings and installation instructions and manufacturer’s catalog showing complete selection of standard and custom components, auxiliary system components and miscellaneous accessories for selection by City. Include all plans and elevations identifying the location of all railing and handrails, and all expansion joints. Show all anchorage items.

3. Profiles of stainless steel welded pipe railing and handrail system components, and the details of forming, jointing, sections, connection, internal supports, trim, and accessories. Show details of the stainless steel welded pipe railing and handrail drawn at 1-1/2 inch scale.

D. Certificates: Submit for approval the following:

1. Copies of material purchase receipts, for this project, signed by a certified and licensed Notary Public, verifying that material purchased for the Work complies with material designations specified as confirmed by approved Shop Drawings.

2. Furnish certification that laboratory loading tests have been performed on the handrail, railing and anchorage systems verifying compliance with performance criteria specified, and that it conforms to all applicable CFR, ANSI and ASTM requirements for loads and deflections and that the data derived from such tests has been used by the registered professional engineer in the design calculations and engineering analyses of the welded pipe railing and auxiliary system components.

3. Certification of welders and welding procedures shall be submitted as specified.

1.8 DELIVERY, STORAGE, AND HANDLING

A. Delivery of Materials:

1. Stainless steel welded pipe railing systems which are damaged during delivery or while being unloaded shall not be stored on Site. Remove such units from Site and replace panels with new, undamaged material.

B. Storage of Materials:

1. Store stainless steel welded pipe railing and accessory materials in a dry location and free from exposure to sun and condensation; with good air circulation around each piece and with protection from windblown rain.

2. Store stainless steel welded pipe railing and accessory materials under tarpaulin covers and in an area protected from dirt, damage, weather and from the construction activities of all Contractors. Do not store outside or allow items to become wet or soiled in any way while on Site.

3. Do not store in contact with concrete, earth or other materials that might cause corrosion, staining, scratching or damage to finish. Do not install system components which become dented, scratched or damaged in any

way. Remove such components from site and replace with new, undamaged material.

C. Handling of Materials:

1. Do not subject stainless steel welded pipe railing and accessory materials to bending or stress. Do not carry or transport panels in the horizontal (flat) position. Hold panels upright on edge when handling.

2. Do not damage edges or handle material in a manner that will cause scratches, warps or dents.

3. Keep on-Site handling to a minimum.

4. Maintain protective covering on railings and handrails. System components which are damaged during installation shall be removed from Site and replaced with new, undamaged material.

1.9 SPARE PARTS, SPECIAL TOOLS, AND SUPPLIES

A. Not Used

1.10 SPECIAL WARRANTY PROVISIONS / GUARANTEE PERIODS

A. Not Used

PART 2 PRODUCTS

2.1 MANUFACTURERS

A. Not Used

2.2 MATERIALS / EQUIPMENT

A. Stainless Steel Mechanical Tubing: Provide the following:

1. Stainless Steel Mechanical Tubing: ASTM A554, Type 316L, annealed. Provide posts and rails with 1.90-inch outside diameter, 0.109-inch wall thickness.

2. Stainless Steel Fittings: Same material as rails except where otherwise shown on Contract Drawings.

B. Post Reinforcing Insert: ASTM A312, Grade TP316L, welded stainless steel pipe, 1.66-inch outside diameter, 0.140 wall thickness (Schedule 40S).

C. Toe-boards: ASTM A666, Type 316L stainless steel. Provide Toe-boards to the dimensions and details shown on the Contract Drawings and as follows:

1. Provide same finish as rails and handrails, securely fastened in place with not more than 1/4 inch clearance above floor level.

2. Provide for thermal expansion and contraction in Toe-boards over the entire range of temperatures specified. Thermal movement shall not cause warping or buckling of Toe-boards.

3. Toe-boards shall meet the requirements of 29 CFR, Part 1910.23, Section (e). Minimum thickness of stainless steel plate shall be 3/16-inch.

4. Toe-boards shall follow curvature of stainless steel welded pipe railing. Where stainless steel welded pipe railing is shown to have curved contours at corners, or other locations, the toe-board shall likewise be curved to follow line of stainless steel welded pipe railing system.

D. Brackets, Flanges, and Plates: Provide ASTM A666, Type 316L stainless steel brackets, flanges and plates. Components shall be selected by City from manufacturer's standard and custom components. Components shall be in accordance with manufacturer's recommendations and as acceptable to City as shown on approved Shop Drawings.

E. Chain, Snaps and Eyebolts: Provide oblong 0.250-inch welded link, Type 316L stainless steel chain weighing 57 pounds per cubic foot, each link 1-1/8-inch by 7/16-inch. Provide 1/4-inch threaded quick link stainless steel eye bolts with heavy-duty swivel snaps and spring loaded latches.

F. Post Sleeves: Provide the following ASTM A312, Grade TP316Lstainless steel sleeves:

1. Post Sleeves for Fixed Railing: 3.50-inch outside diameter, 0.216-inch wall thickness (Schedule 40S), 6-inch long post sleeves, as required for anchorage to concrete and masonry. Components shall be in accordance with manufacturer's recommendations and as acceptable to City as shown on approved Shop Drawings.

2. Removable Railing Post Sleeves: 6-inch long, Schedule 40S post sleeves for removable railing sections. Size post sleeves for snug fit to avoid removable railing lateral movement. Provide continuous cylindrical Teflon inserts to fill annular space between sleeve and post with top cover flange flush with top of mounting surface.

G. Railing Gates: Provide the following:

1. Hinges: Provide railing gates with two self-closing hinges.

2. Latches and Stops: Provide one latch and stop with rubber bumper and 1-inch diameter plastic knob for each railing system gate shown on the Contract Drawings.

H. Accessory and Miscellaneous Materials: Provide all accessory items and system components of ASTM A666, Type 316 stainless steel, finished to match posts and rails.

I. Concealed Connector Sleeves (Rail Splice Inserts): Provide ASTM A312, Grade TP316L stainless steel, 1.66-inch outside diameter, 0.140-inch wall thickness (Schedule 40S), minimum 5-inches long.

J. Welding Electrodes and Filler Metal: Provide type and alloy of filler metal and electrode as recommended by manufacturer of metal to be welded and as required for strength and compatibility of finished items.

K. Concrete and Masonry Anchors: Concrete and masonry anchors shall be as specified in Section 05 05 23.02 - Miscellaneous Metal Fastenings.

1. Anchors shall be of stainless steel Type 316 and a minimum size of 1/2 inch diameter.

L. Non-Shrink, Non-Metallic Grout:

1. Provide formulation that is resistant to erosion from water exposure without needing protection by a sealer or waterproof coating and is recommended by the manufacturer for exterior use.

2. Pre mixed, factory-packaged, non staining, non-corrosive, non-gaseous, cementi¬tious grout, complying with ASTM C1107, requiring only the addition of water at the Site.

M. Bolting Materials: As specified in Section 05 05 23.02 - Miscellaneous Metal Fastenings.

2.3 FABRICATION / ASSEMBLING / FINISHES

A. Provide stainless steel welded pipe railing and handrail systems completely factory fabricated using fabrication techniques recommended for stainless steel. Use tools and fabrication equipment dedicated only to the fabrication of Type 300 series stainless steels to completely eliminate ferrous contamination.

B. Preassemble items in the shop to the greatest extent possible, so as to minimize field splicing and assembly of units at the Site. Disassemble units only to the extent necessary for shipping and handling limitations. Clearly mark units for reassembly and coordinated installation.

1. Railing hall be assembled in sections as long as practicable. Posts shall be connected to flanges and fittings by welding. Surfaces of butt joints shall be ground smooth and square to obtain flush and tight joints undetectable from surrounding finish on all surfaces of the pipe.

2. On-Site welding shall not be permitted.

C. Form exposed work true to line and level with accurate angles and surfaces and straight sharp edges. Fabricate all corners without the use of fittings. Form bent metal corners to the smallest radius possible without causing grain separation or otherwise impairing the work. Provide not less than 4 inch outside radius.

1. 1. Form simple and compound curves by bending members in jigs to produce uniform curvature for each repetitive configuration required; maintain cylindrical cross section of member throughout entire bend without buckling, twisting, cracking, or otherwise deforming exposed surfaces of handrail or railing components.

D. Cope intersections of rails and posts and weld joints. Butt weld end-to-end joints of railings or use welding connectors. Lower rails shall be coped and welded to the posts.

1. Components shall be coped at perpendicular and skew connections to provide close fit.

E. Provide for expansion and contraction in the railing system as required by performance criteria. At each side of expansion joints located in the structure to which the railing system is attached, provide an end post and railing return located 16 inches from the joint. Separation between returns shall match the width of the structure expansion joint.

F. Cut, reinforce and tap components to receive finish hardware, screws, and similar items.

G. Shear and punch metals cleanly and accurately. Remove burrs from exposed cut edges and ease exposed edges to a radius of approximately 1/32 inch.

H. Provide wall returns at ends of wall-mounted handrails. Close end returns, unless clearance between end of handrail and wall is 1/4 inch or less.

1. Close ends of handrail and railing members with prefabricated end fittings.

I. Chains

1. Chains shall be provided across openings in stainless steel welded pipe railing where shown on the Contract Drawings. One end of each chain shall be attached to a 1/4-inch eye bolt in the post and the other end shall be attached by means of an approved heavy stainless steel swivel eye snap hook to a similar eye bolt in the opposite post.

J. Weep Holes

1. Provide 15/64 inch diameter weep holes at the lowest point on all railing system posts and along the bottom side of railing system rails.

2. Provide pressure relief holes at closed ends of handrails and railings.

K. Welding

1. Welding shall comply with the requirements of AWS and NYBC.

2. Provide uniform, tight and dense welds, uniformly ground smooth and blended so no roughness shows after finishing, and without visible transition to metal surfaces so that welded surface matches contours of adjoining surfaces.

a. Welded joints shall be continuous, and made watertight.

b. or shown on the Contract Drawings.

3. All welding shall be performed with Inert Gas Tungsten Arc Welding using Direct Current, Straight Polarity. The non-consumable electrode shall be 1/16-inch diameter, 2 percent threated tungsten electrode and have a point ground on the end similar to a pencil point. The welding current shall be between 70 and 100 amperes. The shielding gas shall be argon, helium or a combination of both with a minimum flow of 15 cubic feet per hour. Filler metal shall be Type 316L, stainless steel.

L. Finishes

1. All handrail, railing, exposed supports and Toe-boards shall be provided with a uniform, bright, mill-polished surface obtained by finishing with a 150 - 220 mesh abrasive, following initial grinding with coarser abrasives. The finish shall be characterized by very fine parallel “grit lines” and be within a uniform range established as either an AISI No. 4 or 5 finish, with final finish established by Sample submission as approved by Engineer in compliance with Section 05 06 00.01 - Schedules for Stainless Steel Work and AISI/NIDI 9012 or AMP/NAAMM AMP 503.

2.4 SOURCE QUALITY CONTROL / SHOP TESTS

A. Obtain all stainless steel welded pipe handrail and railing system components and accessories from the same manufacturer.

B. Provide qualified welding processes and welding operators in accordance with ANSI/AWS “Structural Welding Code” D1.1, Section 5, Qualification.

C. Provide certification that all welders employed on, or to be employed for, the fabrication of the stainless steel welded pipe rail system have satisfactorily passed AWS qualification tests within the previous twelve months. Contractor shall ensure that all certification are kept current.

D. Allowable Tolerances:

1. Limit variation of cast-in-place inserts, sleeves and field-drilled holes to the following:

a. Spacing: ± 3/8 inch.

b. Alignment: ± 1/4 inch.

c. Plumb: ± 1/8 inch.

2. Limit variation of completed handrail and railing system alignment to 1/4 inch in 12 feet and 1/16 inch in 3 feet.

3. Toe Boards: Trueness: ± 1/8 inch

E. Set rails horizontal and parallel to rake of steps or ramps to within 1/4 inch in 12 feet.

PART 3 EXECUTION

3.1 EXAMINATION / PREPARATION

A. The Contractor shall examine the alignment of the substrate and conditions under which the stainless steel welded pipe railing system work is to be performed and notify City in writing of unsatisfactory conditions. Do not proceed with the stainless steel welded pipe railing system work until unsatisfactory conditions have been corrected in a manner acceptable to City.

B. Protection: Protect cast-in-place sleeves and field-drilled holes from debris and water intrusion by use of temporary covers or removable foam inserts that completely fill the cast-in-place sleeve.

C. Coordinate installation of anchorages for handrails and railings. Furnish setting drawings, templates, and installation instructions for installing anchorages, including sleeves, concrete inserts, anchor bolts, and items with integral anchors, that are to be embedded in cast-in-place concrete or masonry. Deliver to Site in time for installation.

D. Verify dimensions by taking measurements at the Site without causing delay in the work. Where measurements cannot be taken at the Site without delaying the work, establish dimensions and proceed with fabrication of handrails and railings without Site measurements. Coordinate construction to ensure that actual dimensions correspond to established dimensions.

3.2 ERECTION

A. Fastening to In-Place Construction

1. General: Do not erect components which have become scarred, dented, chipped, discolored or otherwise damaged or defaced. Railing and handrail system components which have holes, cuts, gouges, deep scratches or dents of any kind shall be removed from the Site before installation. Repairs to correct such work shall not be approved by City. Remove and replace with new material at no cost to the City.

2. Posts and rail sections shall be brought into final alignment by stainless steel welded pipe railing installer.

3. Provide anchorage devices and fasteners where necessary for securing railing and handrail items to in-place construction, including threaded fasteners for concrete and masonry inserts, through-bolts and other connectors as required. Use only Type 316 stainless steel devices and fasteners.

4. Flanged fittings shall be secured to steel with nuts, bolts and washers; to hollow glazed structural tile and masonry with masonry anchors; and to solid grouted masonry and concrete with concrete anchors. Flanges not bearing on metal shall be set in non-shrink grout.

5. Provide end posts and railing returns at 16-inches on each side of structural expansion joints. Separation between returns shall match the width of the structural expansion joint.

6. Field-dowel connections shall be located at posts.

B. Cutting, Fitting and Placement

1. Perform cutting, drilling and fitting required for installation. Set the work accurately in location, alignment and elevation, plumb, level, true and free of rack, measured from established lines and levels.

2. Fit exposed connections accurately together to form tight hairline joints. Do not cut or abrade the surface of units which have not been finished after fabrication, and are intended for field connections by mechanical or other means without further cutting or fitting.

3. Handrails supported from walls, partitions and similar construction shall be supported by brackets located within 18 inches of handrail terminations and at intermediate points spaced not more than 5 feet on center. Drill wall plate portion of the mounting bracket to receive one bolt, unless otherwise shown on the Contract Drawings as concealed anchorage. Provide flush-type wall-return fittings with the same projection as that shown for mounting brackets. Secure mounting brackets and wall-return fittings to building construction as follows:

   a. For anchorage to concrete and solid masonry units, use concrete anchors.

   b. For anchorage to hollow masonry units, use toggle bolts having square heads.

4. Make all splices as near as possible to posts but not exceeding 12 inches from the nearest post. Permanent field splice connections shall be made using manufacturer's recommended minimum 5-inch long Type 316 stainless steel connector sleeves. Tight press-fit all field splice connectors and install in accordance with manufacturer's written instructions as provided on approved Shop Drawings.

5. Space posts 5 feet - 0 inches on center and connect sections as shown on Shop Drawings approved by Engineer.

6. Expansion Joints: Provide slip joints with internal sleeve extending 2 inches minimum beyond joint on each side. Construct expansion joints as for field splices except fasten internal sleeve securely to one side of rail assembly. Locate joints within 6 inches of posts. Submit proposed locations of expansion joints to City.

3.3 FIELD TESTING / QUALITY CONTROL

A. An anchor testing program shall be established based on ASTM E488 and ASTM E894. Perform tension, shear, flexure, and shock loading resistance tests.

1. Test a minimum of one anchor for every three posts and one anchor for every three railing supports.

2. Based on initial results of testing, test additional anchors in order to verify that design safety factors have been provided by anchor installation.

B. Anchors: Suitable equipment shall be used to perform tests required to verify correct installation of anchors and provide proof loads on anchors installed at the Site in accordance with ASTM E488 and ASTM E894.

C. The Contractor shall provide a field report on anchor testing results to City, in compliance with ASTM E488 and ASTM E894, for final approval of welded pipe railing system along with recommendations for remedial work required to bring anchors up to load resistance requirements specified and required by governing authorities having jurisdiction.

D. Acceptance and payment will not be made to the Contractor until report has been approved by the Engineer and remedial work is tested and shown to be in compliance with specified performance requirements.

3.4 STARTUP / DEMONSTRATION

A. Not Used

3.5 ADJUSTING / PROTECTION / CLEANUP

A. Adjusting

1. Adjust railings and handrails prior to securing in place to ensure proper matching at butting joints and correct alignment throughout their length. Plumb posts in each direction.

2. Anchor posts in concrete by means of sleeves set and anchored into concrete substrate and by side-mounting, in areas shown on the Contract Drawings. Provide closure secured to the bottom of the sleeves. Unless otherwise shown on the Contract Drawings, after the posts have been inserted into the sleeves, fill the annular space between posts and sleeves

solid with non-shrink, non-metallic grout as specified. Crown grout away from posts.

3. Anchor posts to steel with stringer or support flanges, angle-type or floor-type as required by conditions, shop-connected to posts and bolted to the steel supporting members.

4. Side-mount posts by fastening them securely in brackets attached to steel or concrete and in accordance with Shop Drawings approved by City.

5. Provide hinged railing sections where shown on the Contract Drawings. Provide hinges and latch for connection to adjacent railing.

6. At walkways and other locations where railing is provided on each side, locate railing system posts opposite each other.

B. Protection

1. Protect railing system from damage by the work of all contractors.

2. Remove defective railing system components immediately upon discovery of damage, and replace with material that meets specification requirements, so that all stainless steel welded pipe railing system components will be without damage or surface blemish at the time of Substantial Completion.

C. Cleanup

1. Clean exposed surfaces of stainless steel welded pipe railing work of every substance before leaving the site after completion of installation. Comply with recommendations of both the stainless steel welded pipe railing and finish manufacturer. Do not use abrasives or non-approved solvent cleaners. Test cleaning techniques on an un-used section of railing before employing cleaning technique in the work.

   a. Remove protective plastic as recommended by manufacturer.

   b. Remove all stains, dirt, grease and other substances by washing railings and handrails thoroughly using clean water and soap. Rinse with clean water.

   c. Do not use acid cleaning solutions, steel wool or other harsh abrasives.

   d. If stains remain after washing, remove finish and restore in accordance with recommendations of the manufacturer.

2. Leave stainless steel welded pipe railing and handrails, free from dents, burrs, scratches, holes and other blemishes. Refinish minor scratches to be indistinguishable from adjacent un scarred areas. If, after refinishing, damage remains visible when viewed from five feet away, or if finish of work has been altered to the point where it appears different from adjacent work, Contractor shall replace damaged work with new undamaged material at no additional expense to the City.

END OF SECTION

SECTION 05 53 01.02 – STAINLESS STEEL FLOOR GRATINGS

PART 1 GENERAL

1.1 SUMMARY

A. The Contractor shall furnish and install all stainless steel floor gratings as indicated on the Contract Drawings and specified herein.

B. Gratings shall be complete with frames, anchors, fastening devices and miscellaneous appurtenances.

1.2 PAYMENT

A. Work performed under this Section shall be paid for as part of work performed in accordance with NYC DEP BWSO Standard Sewer and Water Main Specification Sections 51.11 and 51.71.

1.3 RELATED SECTIONS

A. Section 05 05 23.01 - Welding.

1.4 REFERENCES

A. ASTM A167 - Stainless and Heat-Resisting Chromium-Nickel Steel Plate, Sheet, and Strip.

B. ASTM A276 - Stainless and Heat-Resisting Steel Bars and Shapes.

C. ASTM A480 - General Requirements for Flat-Rolled Stainless and Heat-Resisting Steel Plates, Sheet and Strips.

D. ASTM A666 - Austenitic Stainless Steel, Sheet, Strip, Plate, and Flat Bar.

E. ASTM F593 - Stainless Steel Bolts, Hex Cap Screws and Studs.

F. ASTM F594 - Stainless Steel Nuts.

G. ANSI/NAAMM MBG 531 - Metal Bar Grating Manual.

H. ANSI/NAAMM MBG 532 - Heavy Duty Metal Bar Grating Manual.

I. NAAMM MBG 533 - Welding Specifications for Fabrication of Steel, Aluminum and Stainless Steel Bar Grating.

J. ASTM A992 - Steel Plates, Shapes and Bars; Carbon, Structural.

K. National Association of Architectural Metal Manufacturers (NAAMM).

L. New York City Building Code (NYBC).

1.5 DESCRIPTION

A. Design Requirements

1. The design live load for grating covering floor openings shall be that designated for the adjacent floor area but not less than a uniform load of 150 pounds per square foot or a concentrated load of 300 pounds distributed over a 12-inch square area at the center of span, whichever produces the greater stress.

2. The design live load for grating on platforms shall be as designated on the Contract Drawings but not less than a uniform load of 100 pounds per square foot.

3. Grating in areas subject to vehicular traffic shall be designed for the maximum weight vehicle which can access the area. Forklifts or other similar wheeled vehicles shall have maximum wheel loads defined by the manufacturer. When wheel loads are not defined by the manufacturer, the wheel load shall be defined as 40 percent of the gross loaded weight of the maximum size vehicle to be accommodated.

4. The maximum allowable deflection due to dead load plus live load shall not exceed the span divided by 240, but not more than 1/4 inch.

5. Gratings shall be designed in accordance with the design criteria specified herein, and the NAAMM specifications, unless otherwise noted on the Contract Drawings or as required by the NYBC.

1.6 QUALITY ASSURANCE

A. Not Used

1.7 SUBMITTALS

A. The Contractor shall submit Shop Drawings and material specifications of all gratings for approval by the Engineer.

B. Gratings shall not be manufactured until the Contractor's Shop Drawings have been approved by the Engineer.

C. Samples of grating and fastening devices shall be submitted for approval by the Engineer.

PART 2 PRODUCTS

2.1 MANUFACTURERS

A. Not Used

2.2 MATERIALS / EQUIPMENT

A. Type of Gratings

1. Unless otherwise shown or specified, gratings shall be one of the following types and shall be the product of one manufacturer:

a. Type "A" - Parallel bearing bars, with cross members at right angles.

b. Type "B" - Parallel bearing bars, with diagonal cross members.

B. Materials

1. Floor gratings and appurtenances shall be Type 316L Stainless Steel and shall conform to the requirements specified herein and to the following standards:

a. Gratings: ASTM A167; ASTM A480; ASTM A666

b. Frames, Curb Angles, Braces, Skirt Angles, Bolts and Fastening Devices: ASTM A276; ASTM A480; ASTM F593, ASTM F594

2.3 FABRICATION / ASSEMBLING / FINISHES

A. Gratings shall be accurately fabricated, free from warps, twists or other defects which affect the appearance and serviceability of the grating,

B. The tops of the grating bearing bars and cross bars shall be in the same plane.

C. Gratings shall have a mill finish unless otherwise noted on the Contract Drawings.

D. All welds shall be ground smooth and conform to the requirements of Section 05 05 23.01 - Welding and NAAMM MBG 533.

E. Openings in and edges of all grating sections shall be banded with bearing bars. Bands shall be welded to all intersecting members.

F. Grating Fabrication

1. Type "A" Grating (Pressure Locked or Welded) shall consist of parallel bearing bars spaced not more than 1-3/16 inches on centers joined by cross members spaced not more than 4 inches on center (unless shown otherwise on the Contract Drawings), to form rectangular openings. Approved welded, electric-forged, slotted, friction fitted or interlocking joints shall be used in joining cross members to the bearing bars to give the grating the required strength, rigidity and durability. The distance between the support and the nearest cross bar shall not exceed 2 inches.

2. Type "B" Grating (Welded or Riveted) shall consist of parallel bearing bars spaced not more than 1-5/16 inches on center, joined by welded or riveted bent diagonal cross bars. Rivets shall be 1/4 inch in diameter and shall be spaced not more than 4 inches on center unless shown otherwise on the Contract Drawings. The distance between the support and the center of the nearest rivet shall not exceed 1 inch.

3. Minimum grating depth shall be 1-1/4 inches with bearing bars not less than 3/16 inches thick.

4. Welded cross members shall not be less than 3/16 inch in thickness. Mechanically interlocked cross members shall not be less than 1/8 inch in thickness. The depth of cross members shall not be less than one-half the depth of the bearing bars, but such depth need not exceed 1 inch. Riveted cross members shall be as specified for mechanically interlocked cross members.

5. Each section of grating shall be sized to weigh a maximum of 100 pounds unless noted otherwise on the Contract Drawings.

G. Grating Cut-outs

1. Stems, columns and similar work. Where more than two bearing bars are included in the cut-out, banding bars of the same dimensions as the bearing bars shall be provided around the opening and welded or electric-forged to the component parts of the grating.

H. Grating Stair Treads and Landings

1. Grating stair treads shall be 1 inch wider than tread widths shown on the Contract Drawings and shall be securely fastened to angles or carrier bars which in turn shall be fastened to stringers. The outer edge or nosing of stair treads shall be so constructed as to make it distinctly visible and contrasting with the other part of the tread. Non-slip nosings shall be furnished on all the stair treads and landings.

2.4 SOURCE QUALITY CONTROL / SHOP TESTS

A. Not Used

PART 3 EXECUTION

3.1 EXAMINATION / PREPARATION

A. Field Measurements

1. The Contractor shall check all dimensions in the field after all piping and equipment are set in place and determine the exact dimensions and locations of openings and cut-outs.

2. Templates shall be made where required for location and size of openings and cut-outs.

3. The Contractor shall field verify all pertinent dimensions prior to grating fabrication.

3.2 INSTALLATION

A. Installation

1. Gratings shall be installed with each section readily removable and replaceable. Adjacent units shall be neatly fitted together.

2. The clearance at the ends or between sections of gratings shall be a maximum of 1/4 inch.

3. Tops of gratings shall be set flush with surrounding construction.

4. Gratings shall be set with a full and uniform end bearing on the stainless steel frames to preclude rocking movement; wedges or similar shimming devices shall not be used.

B. Fastening Devices

1. Approved fastening devices shall be installed to hold the gratings rigidly to the supports with means for easy removal.

2. Fastening devices shall not protrude above the walking surface of the grating.

3. Fasteners shall be installed in accordance with the manufacturer's recommendations.

END OF SECTION

SECTION 09 91 00 – PAINTING

PART 1 GENERAL

1.1 SUMMARY

A. Painting, as specified herein, shall include, but not be limited to, preparation of surfaces, shop painting of items furnished, and field painting of structures, piping, conduit, ducts and equipment, and marking of piping and electrical conduit.

B. Painting shall be provided as shown on the Contract Drawings, specified herein or in the Contract, or as required for a complete installation.

1.2 PAYMENT

A. There is no separate payment provision for this Section, and shall be deemed included in the prices bid for the respective Contract items.

1.3 RELATED SECTIONS

A. Section 40 05 97 - Identification for Process Equipment.

1.4 REFERENCES

A. Codes and standards referred to in this Section shall be as follows:

1. SSPC - The Society of Protective Coatings (formerly of Steel Structures Painting Council)
    a. SSPC-SP 1 Solvent cleaning
    b. SSPC-SP 6 Commercial blast cleaning
    c. SSPC-SP 10 Near white cleaning
    d. SSPC-SP 2 Hand tool cleaning
    e. SSPC-SP 11 Power tool cleaning to bare metal
    f. SSPC- SP 15 Commercial grade power tool cleaning
    g. SSPC-SP 16 Brush off Blast Cleaning of Non Ferrous Metals
2. ASTM - American Society for Testing Materials
    a. ASTM D3359 - Measuring Adhesion by Tape Test
    b. ASTM D16- Terminology Relating to Paint, Varnish, Lacquer, and related Products.

B. NSF- National Sanitation Foundation

1.5 DESCRIPTION

A. Safety Requirements

1. All painting materials specified herein, and ingredients of coatings containing substances that are potentially toxic or hazardous shall be shipped with warning labels. These products shall be applied in strict conformance with the safety requirements of the following:
    a. The Manufacturer

b. The National Paint and Coatings Association (NPCA)

c. The Society of the Plastics Industry (SPI)

d. The Manufacturing Chemist Association (MCA)

e. The Society of Protective Coatings formerly of Steel Structures Painting Council (SSPC)

f. The United States Government Occupational Safety and Health Administration (OSHA)

g. The Health and Safety Requirements of the State of New York (PESH- Public Employees Safety and Health)

h. The Health and Safety Requirements of the City of New York (COSH- Citywide Office of Safety and Health)

B. Environmental Requirements

1. Weather:

a. Air and surface Temperatures: Prepare surfaces and apply and cure coatings within air and surface temperature range in accordance with manufacturer's instructions.

b. Surface Temperature: Minimum of 5 degrees F (3 degrees C) above dew point.

c. Relative Humidity: Prepare surfaces and apply and cure coatings within relative humidity range in accordance with manufacturer's instructions.

d. Precipitation: Do not prepare surfaces or apply coatings in rain, snow, fog or mist.

e. Wind: Do not spray coatings if wind velocity is above manufacturer's limit.

2. Ventilation

a. Provide ventilation during coating evaporation stage in confined or enclosed areas in accordance with AWWA D102.

3. Dust and Contaminants:

a. Schedule coating work to avoid excessive dust and airborne contaminants.

4. Protect work areas from excessive dust and airborne contaminants during coating application and curing.

1.6 QUALITY ASSURANCE

A. Paint Quality Assurance Records

1. The following information shall be recorded for every paint project and submitted to the Engineer:

a. Date

b. Shift

c. Part Temperature

d. Dew Point

e. Paint Batch Number/s

f. Mixing Time for Each Part and the Combined Parts of a Paint System

g. Pot Life

h. Curing Time of Primer and Finish Layers

i. Paint thickness measurements (DFT)

j. Holiday Test Results and Repair Data

k. Peel Test Results and Repair Data

l. Foreman or Supervisor's Signature

B. Test Surfaces

1. The Contractor shall paint certain areas of concrete and other surfaces, where directed, using approved coatings for use by the Engineer for comparisons with coating systems applied during the progress of the work.

2. Such coated areas shall not be subsequently painted during the entire period of construction or during the guarantee period.

3. At the end of the guarantee period, the test surfaces shall be inspected by the Engineer for any deterioration such as cracks, blisters, flakes and excessive chalking.

4. The Contractor shall supply all material and labor and shall perform any remedial work on all such deteriorated surfaces using the coating system represented by the test surface at no additional cost to the City.

C. Painting Requirements

1. General: The Contract does not specify the surface treatment for every individual part of the work, however this Contract shall be provided with a complete painting job throughout the work as specified herein. All items customarily or specified to be shop painted shall be primed and finished in the shop. Field painting will not be allowed unless requested in writing to the Engineer, and written consent is given by the Engineer. In general, only areas that are to be field welded are not to be painted until field erected.

2. Manufacturer's Standard Finished Items: The following items shall be furnished with the manufacturer's standard prime and finish coats applied in the shop: pumps, motors, gears, gear housings, air compressors, wall fans, temperature control and instrument panels, process air blowers, engines, filters, strainers, air dryers, meters, gas boosters, gas turbines, generators, panelboards, transformers, boilers, condensing units, water chillers, cooling towers, condensers, heat exchangers, humidifiers, air handling units, sound attenuators, air conditioning and dehumidification units, convector cabinets, unit heaters, enclosures for finned tube radiators, cabinet heaters, boilers, wood seats, lockers, metal toilet partitions, metal

urinal screens, aluminum fascia, motor control centers, aluminum light standards, and hoisting equipment. Steel reinforcing bars for concrete shall be coated in accordance with the Contract. When powder coatings are required by the Contract, the powder coatings shall be in accordance with the requirements of the manufacturer of the item.

3. Painted Items: The following items shall be painted as specified herein: steel water storage tank, structural steel and wrought metals, composite metal floor deck, pipelines, hangers and supports, sluice gates, pumps and pumps parts, valves, valve and sluice gate operators and stands, guard housings, air filter equipment, effluent strainers, heat exchangers, air receivers, tanks, air silencing equipment, storage tanks, gas domes, sediment tanks, steel stair framing, steel lintels, hollow metal doors and frames, gypsum wallboard, interior concrete block, interior concrete walls, columns, beams and ceilings, covering over insulation on piping, electrical conduit systems, small piping and copper tubing, ducts, covering over ducts, and PVC piping, valves and fittings.

4. Unpainted Items: The following items shall not be painted, unless otherwise specified: registers, grilles, dampers and linkage, fire sprinklers, name and identification plates and tags, floor gratings, brass pipe and fittings, brass valves, stainless steel, wood, stop log panels, spray-on fireproofing steel to receive spray-on fireproofing, surfaces to receive field welding, and fraying surfaces of high strength bolted connections.

1.7 SUBMITTALS

A. Contractor shall submit Shop Drawings for approval of the Engineer. Submittals shall include, but not be limited to: catalog cuts and reference materials.

1. Color Chart: The Contractor shall submit the manufacturer's standard color chart for color selection for painting of items other than process piping, valves, pipe line equipment, pump casings, blowers and other mechanical equipment and their drive units, all of which shall be in conformance with the "BACKGROUND COLOR" of the General Color Code specified in Section 40 05 97 - Identification for Process Equipment.

2. Paint Samples: The Contractor shall submit:

   a. Two one-quart samples of each required kind of paint material, or the ingredients thereof which are to be mixed on the job.

   b. Samples shall be labeled as required under Article 1.07, and shall include the certificate of the manufacturer stating the actual percentages by weight and volume of all ingredients entering into the mixture.

   c. Upon request, further samples shall be provided as the work progresses.

   d. Painting materials shall not be applied without written approval of samples by the Engineer.

3. Painted Surface Samples:

   a. Upon request, duplicate samples of the results obtained by painting and finishing various materials on the work shall be submitted.

Such samples, and the approved paint applied thereto, shall be applied in strict conformance with these Sections.

b. Finished areas shall be considered adequate for the purpose of determining the quality of the work. All painting work shall be performed in a quality equal to the approved samples.

c. Where equipment is customarily shipped with a standard finish, samples of the proposed color and finish shall be submitted for approval prior to shipping.

4. Certification: The Contractor shall furnish:

a. Affidavits from the manufacturer certifying that materials furnished conform to the requirements specified

b. And that paint products have been checked for compatibility.

5. Immersion Certification: The Contractor shall furnish:

a. Affidavits from the manufacturer certifying that coatings in immersion service contain no water soluble solvents or corrosion inhibitive (active) pigments with slight water solubility.

6. List of Paints: The Contractor shall submit:

a. A list of paint products with mil thickness and solids by volume, including all paint applied in the shop and in the field. The list shall be in accordance with the requirements of this Section and the recommendations of the paint manufacturer.

7. Applicator's Quality assurance:

a. Submit list of a minimum of 5 completed projects of similar size and complexity to this work. Include for each project:

1) Project name and location

2) Name of owner

3) Name of contractor

4) Name of engineer

5) Name of coating manufacturer

6) Approximate area of coatings applied.

7) Date of completion.

8. Warranty:

a. Submit manufacturer's standard warranty.

1.8 DELIVERY, STORAGE, AND HANDLING

A. General: All products and materials shall be delivered, stored, and handled as specified in Contract Documents and as follows:

B. Delivery and Storage: All paint materials delivered and stored at the site shall be from the approved manufacturer only.

C. Packaging and Labeling: Paints, stains, varnish or ingredients of paints to be used on the job shall be properly prepared, packed, and labeled. All materials shall be delivered to the site in original, unbroken containers bearing the manufacturer's printed labels, which shall specify the following:

1. Project and Contract No.
2. Name of Manufacturer
3. Address of Manufacturer
4. Generic Name of Paint or Ingredients
5. Brand and Trade Mark
6. Schedule Letter as Listed Herein
7. Percent Solids by Volume
8. Net Quantity
9. Date of Manufacturer
10. Date Packed

D. Storage: Painting materials shall be stored at the site in manner and place which shall be in accordance with applicable codes and regulations, and in accordance with manufacturer's instructions. The storage space shall be kept clean at all times. Every precaution shall be exercised to eliminate fire hazards.

PART 2 PRODUCTS

2.1 MANUFACTURERS

A. Standards of Quality: Proprietary protective coatings included herein by brand name or trade mark are given solely as standards of quality and for bidding purposes and do not preclude the use of an approved equivalent.

B. Latest Products: Unless specified otherwise, the proprietary protective coatings of the manufacturer's latest products in regular production on the date of receipt of order shall be provided.

C. Equivalents: Equivalent products shall be of a standard, regularly produced product of a manufacturer. Equivalent products shall be submitted on their applicable published printed literature that states the generic type, instructions for use, solids by volume, application rates, and chemical components of vehicles and solids. Equivalent products shall be accompanied by a list of projects where each of the coatings has been used on new construction and has rendered satisfactory service for at least three years. Should the manufacturer's literature of the product being offered call for higher film thickness, the greater film thickness shall be applied, and the submitted schedule shall so state.

1. Paintings approved as manufactured by these Painting Manufacturers:
    a. Tnemec Company, Inc., Kansas City, MO.
    b. Sherwin Williams, Cleveland, OH.
    c. International Paint, Houston, TX.

d. Carboline Company, St. Louis, MO.

e. PPG Amercoat, Little Rock, AR.

f. Or approved equal

2.2 MATERIALS / EQUIPMENT

A. General:

1. Compatible shop and field coats shall be provided.
2. All coats of paint for any particular surface shall be from the same manufacturer.
3. Paint shall be of approved color as selected from the manufacturer's standard range of colors.
4. The Contractor shall submit proposed modifications to the specified painting systems for the Engineer's approval prior to use.
5. Paints containing lead or manganese driers shall not be submitted.

B. Classification of Paints: Alphabetical designations have been used in the following list to classify/group acceptable paints by the type and quality of materials desired. Equivalent material from the manufacturers named above or from other approved manufacturers may be used in any of these paint groups in accordance with the procedures for substitution.

CLASSIFICATION OF PAINTS		
Paint Group	**Product Name and Number**	**Dry Film Thickness Mils per Coat**
A	**Tnemec:** Series V69 Hi-Build Epoxoline II	3.0-5.0
	Carboline: Carboguard 60/61 or Carboguard 635	3.0-6.0 3.0-6.0
	Sherwin Williams: Copoxy Shop Coat Primer	2.0-4.0
	International Paint: Integrated 345 or Devran 224HS	3.0-4.0
	PPG: Amercoat 370	4.0-6.0
B	**Tnemec:** Series V140-44 BR Pota-Pox Plus	4.0-6.0
	Carboline: Sanitile 120	1.0-2.0
	Sherwin Williams: Dura-Plate 235 (Waste Water)	3.0-5.0
	International Paint: Interseal 670 HS or Bar Rust 233HS	3.0-6.0
	PPG: Amerlock 2/400	4.0-6.0

CLASSIFICATION OF PAINTS		
Paint Group	**Product Name and Number**	**Dry Film Thickness Mils per Coat**
C	**Tnemec:** Series 73 Endura-Shield	2.0-3.0
	Carboline: Carbothane 134 HG Carbothane 134WB	2.0-3.0 2.0-3.0
	Sherwin Williams: Acrolon-218HS Hi solid Polyurethane	3.0-5.0 2.0-3.0
	International Paint: Interthane 990HS or Devathane 379 UVA	2.0-3.0
	PPG: Amercoat 450H	2.0-4.0
D	**Tnemec:** Series 69 Hi-Build Epoxoline II	3.0-5.0
	Carboline: Carboguard 61/691 Carboguard 635	4.0-8.0 4.0-8.0
	Sherwin Williams: Macropoxy 646	4.0-6.0
	International Paint: Interseal 670HS or Bar Rust 233H/236	3.0-6.0
	PPG: Amercoat 240	4.0-12.0
E	**Tnemec:** Series 90-97 Tnemec-Zinc	2.5-3.5
	Carboline: Carbozinc 859 or Carbozinc 859 VOC or Carboguard 60	3.5-5.0
	Sherwin Williams: Corothane I Galvapac	2.5-3.5
	International Paint: Interzinc 52 or Catha Coat 302H or Catha 316 (immersion)	3.0-5.0
	PPG: Novaguard 840	16.0-24.0
F	**Tnemec:** Series 130 Envirofill Masonry Filler	As Required
	Carboline: Sanitile 100 Block Filler	As Required
	Sherwin Williams: Heavy Duty Block Filler (dry) Kem Cati –Coat Epoxy Filler/ Sealer	As Required As Required
	International Paint: Truglaze 4015 or Intercryl 320	As Required
	PPG: Amerlock 400 BF	10.0-20.0
G	**Tnemec:** Series 151 Elasto-Grip	1.0-1.5
	Carboline: Galoseal WB	0.5-1.0
	Sherwin Williams: Pro-Mar 200 Primer	1.0-2.0
	International Paint: Glidden PC 1000	1.0-2.0
	PPG: Speedhide Interior Primer 6-2	1.0

CLASSIFICATION OF PAINTS		
Paint Group	**Product Name and Number**	**Dry Film Thickness Mils per Coat**
H	**Tnemec:** Series 6	2.0-3.0
	Carboline: Sanitile 155	2.0-3.0
	Sherwin Williams: Promar 200 Series (dry wall) DTM Acrylic (pipe insulation)	1.5-2.0
	International Paint: Glidden Dulux Lifemaster 1500 series	1.5-2.0
	PPG: Speedhide Interior Latex 6-411	1.5
I	**Tnemec:** Series 140-AA83 Pota-Pox Plus	4.0-6.0
	Carboline: Carboguard 691/ Phenoline 341	4.0-6.0
	Sherwin Williams: Macropoxy 646 PW	4.0-6.0 Upto 50 Mils
	International Paint: Interseal 670HS or Bar Rust 233HS	4.0-6.0
J	**Carboline:** Phenoline 311	1.0-3.0
	Sherwin Williams: Duraplate 235	3.0-5.0
	International Paint: Enviroline 54	3.0-5.0
K	**Carboline:** Reactamine 760 Plasite 4550S	20.0-100.0 20.0-60.0
	Sherwin Williams: Sherflex or C / Cote SC	25.0-100.0/ 20.0-60.0
	International Paint: Enviroline 222	20.0-100.0
L	**Tnemec:** Series 141	6.0-14.0
	Carboline: Reactamine 28 or Carboguard 1340 WB	1.0-2.0
	Sherwin Williams: Tank Clad HS	5.0-8.0
	International Paint: Ceilcote Interzone 954	14.0-18.0
M	**Tnemec:** Series 431 Perma- Shield PL	30.0-40.0
	Carboline: Reactamine ET	30.0-40.0
	Sherwin Williams: Dura Plate UHS or Cor Cote SC	30.0-40.0
N	**Tnemec:** Series FC22 or 22 Epoxoline	20.0-30.0
	Carboline: 341	20.0-30.0
	Sherwin Williams: Sher Plate PW	25.0-30.0
	International Paint: Interline 975	30.0-40.0

2.3 FABRICATION / ASSEMBLING / FINISHES

A. Not Used

2.4 SOURCE QUALITY CONTROL / SHOP TESTS

A. Not Used

PART 3 EXECUTION

3.1 EXAMINATION / PREPARATION

A. Surface Preparation: Prior to painting, Surface preparation prior to painting shall be in accordance with the following guidelines and as recommended by the painting material manufacturer.

SURFACE PREPARATION GUIDELINES	
Class of Work	**Preparation of Surface Prior to Painting**
Structural Steel and Steel Encased in Concrete, Masonry or Fireproofing	All visible oil, grease, dirt, dust, mill scale, rust, paint, oxides, corrosion products and other foreign matter shall be removed by compressed air nozzle blasting, centrifugal wheels or other specified method. Discoloration caused by certain stains shall be limited to no more than 33 percent of each square inch of surface area in accordance with Society of Protective Coatings (SSPC-SP6).
Steel (other than structural, encased or galvanized) and Steel Submerged Under Water	All visible oil, grease, dirt, dust, mill scale, rust, paint, oxides, corrosion products and other foreign matter shall be removed by compressed air nozzle blasting, centrifugal wheels or other specified method. Discoloration caused by certain stains shall be limited to no more than 5 percent of each square inch of surface area in accordance with Society of Protective Coatings (SSPC-SP10).
Galvanized Steel and Other Metals	All welds, beads, blisters or protuberances, other than identification markings shall be smooth, and other imperfections shall be removed. All nonferrous metals and galvanized steel, whether shop primed or field primed, shall be solvent cleaned in accordance with Society of Protective Coatings (SSPC-SP1).
Canvas Pipe Covering	All adhering debris shall be removed and indentations or other unsightly spots shall be smoothed out to give a uniform, even surface. Surfaces shall be brushed clean.

SURFACE PREPARATION GUIDELINES	
Class of Work	**Preparation of Surface Prior to Painting**
Concrete and Masonry Surfaces	Concrete and masonry shall be dried for a minimum of 28 days and then the dry concrete and masonry shall be brushed and washed to remove all loose dirt, dust, free lime and other deleterious substances by approved methods. Protruding fins and other adhering matter shall be removed or ground until a smooth, even finish is obtained. Concrete surfaces to be painted shall be acid etched or otherwise roughened as recommended by the manufacturer of the coating to be applied, to produce a slightly granular surface required for adherence of coating to the concrete, unless otherwise indicated.
PVC	All adhering debris shall be removed and surface shall be roughened using suitable sandpaper. Surfaces shall be dry and free from dirt, oil, grease etc.

3.2 APPLICATION

A. General: All painting and coatings shall be applied in accordance with the manufacturer's recommendations and approved submittals. A representative of the paint manufacturer shall inspect the surfaces to be painted and shall advise on the proper application. The paint manufacturer representative shall periodically be consulted regarding ambient temperature and humidity conditions.

B. Shop Painting: The following items shall be provided with shop coats of primer and finish coats as herein specified before exposure to the weather:

1. Metals:
    a. Structural steel

        Note: Consider using hot dip galvanizing at crevices or hard to reach places on steel structural.

    b. Miscellaneous steel and wrought iron
    c. Ornamental wrought and light iron
    d. Iron castings
2. Machinery and Equipment:
    a. Mechanical and electrical equipment
3. Pipe:
    a. All piping except galvanized iron, stainless steel, aluminum, copper, brass and bronze piping.

C. Field Painting: All painting at the site of the project is hereby designated as field painting for those items that cannot be shop painted or are touched up due to minor damage to the painted surface.

1. Repair and Repainting: Field coatings shall not be applied until all marred surfaces have been repaired or repainted. Shop coated surfaces shall be thoroughly cleaned and retouched prior to the application of successive paint coats in the field.

2. Unpainted Materials: Do not paint or finish copper, bronze, chromium plate, nickel, stainless steel, aluminum (except ducts and conduit adjacent to finish painted surfaces), monel metal, lead, lead coated copper and brass, except as otherwise indicated.

3. Items to Receive Coating: All ferrous metals and insulated surfaces shall be provided with a protective coating. Interior surfaces, exposed masonry walls and concrete walls, floors and ceilings shall be provided with protective coatings as indicated on the drawings and specified.

4. Surface Condition: Only surfaces that are dry and free from dust, grease or other undesirable or interfering substances shall receive coatings. Coatings shall be as specified herein in the “Material Painting Schedule”.

5. Application: Finish coats shall be applied after all adjacent work has been completed. Successive coats shall have different shades or tints of color wherever possible. Colors shall be as selected and approved by the Engineer. Prime and successive finish coats shall be cleaned, sand papered, or otherwise treated before the next coat is applied, in accordance with the recommendations of the coating manufacturer, and as approved by the Engineer. All coats shall be inspected and approved by the Engineer, before application of any succeeding coats. All coats shall be applied to the dry film thickness (DFT) specified. Coatings shall be applied by skilled personnel under adequate illumination. All painted surfaces shall be left in a clean, orderly and acceptable condition.

6. Surface and Atmospheric Conditions: Paints shall not be applied when the surface temperature is less than 40 degrees F, when the relative humidity exceeds 85 percent, or when the surface to be painted is wet or damp, unless more stringent requirements are called for by the paint manufacturer.

D. Field Painting Operations: Surfaces to be given protective coating shall be thoroughly cleaned. Scratches and abrasions on equipment which has been shop coated shall be refinished and all surfaces to be field painted shall be approved by the Engineer before proceeding with painting. Painting shall be performed in a continuous and orderly operation to facilitate adequate inspection, however material subject to weathering or corrosion shall be given prime coats as quickly as practicable.

1. Method of Application: All paint material shall be applied by brush or roller. Spray painting will be permitted only with the specific approval of the Engineer. Surfaces which are so close together as to prevent the insertion of a standard size roller or brush shall be painted thoroughly with the prescribed number of coats by using special narrow rollers or brushes.

2. Adjacent Areas: Areas under and adjacent to painted surfaces shall be fully protected at all times. Dripped or spattered paint shall be promptly removed and any adjacent surfaces that have been damaged or discolored by overspray shall be repaired, refinished, and repainted.

3. Tinting: Successive coats of paint shall be tinted to make the various coats easily distinguishable. Undercoats of paint shall be tinted to the approximate shade of the final coat of paint. Final coats of paint shall not be applied until all other work has been completed, the dirt and rubbish removed and the surfaces suitably prepared. Paint to be applied shall be at room temperature.

4. Conditions for Application: Each coat of paint shall be given sufficient time to cure per the manufacturer's recommendation before application of the succeeding coat. Each succeeding coat shall be applied within the recoat time specified by the manufacturer; otherwise the painted surface shall be prepared per the manufacturer's recommendation before it is recoated. Exterior painting will not be allowed in dust laden air, during damp or threatening weather, or on moist or wet surfaces, or when the surface temperature is below 40 degrees F on a falling thermometer or under 50 degrees for catalyzed epoxy material; it will not be allowed in extreme heat or when metal is hot enough to cause the paint to blister and produce a porous film. Do not apply interior painting until the building is thoroughly dry. If the temperature in the interior of the building, in the opinion of the Engineer, is too low painting will be stopped until the building is heated. Proper ventilation and sufficient heat shall be maintained to permit the paint to dry. The building shall be maintained to be free from dust.

5. Remedial Work: Any paint found defective shall be removed. Touch-up and remedial painting shall be provided as directed and as required until completion and acceptance of final work. If damage to the painted surface is excessive, as determined by the Engineer, that item shall be rejected and shipped back, at Contractor's expense, to be properly recoated before it can be accepted.

6. Application: Each coat of paint shall be applied as a continuous film of uniform thickness, free of pinholes and blemishes, to the maximum extent practicable. Any thin spots or areas missed in the application shall be repainted and permitted to dry before the next coat is applied. An approved low voltage wet sponge "holiday" detector shall be used as directed by the Engineer. All paint shall be carefully applied to a smooth even coating without runs or sagging. Enamels shall be brushed with a smooth even flow. Each coat of paint shall be dry, not only on the surface, but throughout the thickness of the paint film, before the next coat is applied. Finished surfaces shall be uniform in gloss, finish, and color, and free from flash spots and brush marks. In all cases, the resultant paint film produced shall be satisfactory in all respects to the Engineer.

7. Thinning: If the paint material must be diluted for application by spray gun, the coating shall be built up to the same film thickness achieved with undiluted material (i.e., one gallon of paint as originally furnished must not cover a greater surface area when sprayed than when applied unthinned by brush). Where thinning is necessary, only the products of the manufacturer furnishing the paint shall be used for the particular purpose, and thinning shall be done with the manufacturer’s knowledge, in accordance with printed instructions.

8. Thickness and Adhesion Testing: Dry film thickness of each coat shall be as specified herein. Dry film thickness will be checked by the Engineer or a representative with a magnetic gauge for ferrous metal in accordance with SSPC 2 or Tooke gauge destructive test for concrete. Film thickness of shop coats or other previously applied coating shall be checked by the Engineer or a representative and recorded before painting in order to determine thickness of field coats. Dry film thicknesses for concrete surfaces shall be determined by measuring with a wet-film gauge and by material consumption. Paint adhesion shall be tested by the peel method in accordance with ASTM D 3359.

9. Inaccessible Items: Exposed members which will be inaccessible after erection shall be painted and cleaned prior to erection.

10. Coverage: All surfaces to be painted shall be completely covered. When color on undercoats shows through the final coat of paint, surfaces shall be covered by additional coats until paint is of uniform color and appearance and coverage is complete.

11. Safe Atmosphere: The Contractor shall provide sufficient temporary ventilation during painting operations in enclosed areas to remove moisture and solvents, and to keep the atmosphere safe from harmful or dangerous fumes and dust levels for personnel.

E. Workmanship: Only skilled painters shall perform the work and specialists shall be employed where required. Finished surface shall not show brush marks or other irregularities. Top and bottom edges of doors shall be painted as required for the adjacent surfaces. Undercoats on hollow metal shall be thoroughly and uniformly sanded with No. 00 sandpaper, or equal abrasive, to remove all surface defects and provide a smooth, even surface.

F. Mixing: All paints and coatings shall be mixed in accordance with the manufacturer's instructions on the printed label. The Contractor shall provide galvanized iron pans of sufficient size to contain all mixing pails and mix all paints and ingredients therein.

G. Rates of Application: Paints shall be applied so as to give coverage per gallon not greater than that recommended by the manufacturer. Quantities of paint used for successive coats on the various parts of the work shall be recorded in a manner satisfactory to the Engineer.

H. Touch-Up of Shop-Primed and Finished Items: Touch-up of any and all damaged portions and imperfections in shop-primed and finished items shall be accomplished using the same paint as used for the shop prime and finish. Surface shall be prepared prior to touch-up by wire brushing and sanding to remove rust, scale and loose paint.

I. Aluminum and Incompatible Surfaces: Where aluminum surfaces come in contact with incompatible metals, lime, mortar, concrete or other masonry materials, one field coat of Group A paint as specified under Article 2.03 "Classification of Paints" in this Section shall be applied to the incompatible surfaces.

J. Concealed Surfaces: All wall surfaces which will be concealed by equipment shall be painted before equipment installation.

3.3 ADJUSTING / PROTECTION / CLEANUP

A. The Contractor shall touch up and restore any finish damaged. Paint or other finishes spilled, splashed or splattered shall be removed from all surfaces using care so as not to mar any surface or item being cleaned.

1. The Contractor shall rectify any failures or breakdowns, loosening of the paint or coatings through the guarantee period, regardless of the paint systems used. This will require removal of the entire coating where failure occurs and repainting with the coating system previously specified. Patching will not be allowed.

MATERIAL PAINTING SCHEDULE																				
Materials and Conditions	**Paint Groups (A-N)** **Tn: Tnemec, Cb: Carboline, SW: Sherwin Williams, IP: International paint, PPG: PPG/Amercoat**																			
	Prime Coat					**Finish Coats**														
						1st					**2nd**					**3rd**				
Paint Manufacturer	**Tn**	**Cb**	**SW**	**IP**	**PPG**	**Tn**	**Cb**	**SW**	**IP**	**PPG**	**Tn**	**Cb**	**SW**	**IP**	**PPG**	**Tn**	**Cb**	**SW**	**IP**	**PPG**
Steel and Iron - Structural and Miscellaneous Uses:																				
Interior (Indoors) shop primed, field finished	B	A	A or D	A	A	B	A	D	A	B	A	A	D	A	B	A	A	D	A	--
Exterior (Outdoors) shop primed, field finished	B	A	A or D	B or A	A	B	A	A or D	B or A	B	A	A	D	A	B	C	C	C	C	--
Submerged, Buried or Continuously Wet Exposed to sewage, shop primed, field finished	B	A	A	B	A	B	A	A or B	B	B	D	D	B	D	D	D	D	B	D	--
Steel and Iron - Industrial Equipment (Exposed to wastewater):																				
Submerged, Buried or **continuously wet in wastewater**, completely shop coated inside and out, includes OEM factory finished items such as gates, valves, etc.	L Or M*	A Or K*	A or M*	D or L or K	B	L	A	B Or L	D	B	L	A	B Or L	D	B	--	--	B	D	--

MATERIAL PAINTING SCHEDULE																				
Materials and Conditions	**Paint Groups (A-N)** **Tn: Tnemec, Cb: Carboline, SW: Sherwin Williams, IP: International paint, PPG: PPG/Amercoat**																			
	Prime Coat					**Finish Coats**														
						1st					**2nd**					**3rd**				
Paint Manufacturer	**Tn**	**Cb**	**SW**	**IP**	**PPG**	**Tn**	**Cb**	**SW**	**IP**	**PPG**	**Tn**	**Cb**	**SW**	**IP**	**PPG**	**Tn**	**Cb**	**SW**	**IP**	**PPG**
Above grade, indoors, **exposed to waste water**, completely shop coated inside and out, includes OEM factory finished, items such as gates, valves etc.	L or M*	A	A or M*	D or L or K	A	L	A	B Or L	A or D	B	L	C	B Or L	A or D	B	--	--	B	A or D	--
Above grade, outdoors, **exposed to waste water**, completely shop coated inside and out, includes OEM factory finished, items such as gates, valves etc.	L or M*	A	A Or M*	D or L or K	A	L	A	B Or L	A or D	B	L	C	C	A or D	B	--	--	B	A or D	--
Inside of item immersed in sewage	L or M*	A or J	A Or M*	D or L or K	D Or E*	L	A or J	B or L	D	D or E	L	A or K	B or L	D	D or E	--	--	B	D	--
Ductile Iron or Steel Process Piping, submerged, Buried or constantly wet, **exposed to sewage**, H2S exposures, OEM factory finished.	M*	A or M*	A Or M*	D or K	E*	--	A	B	D or K	--	--	A	B	D or K	--	--	--	B	D or K	--
Steel and Iron - Industrial Equipment (Exposed to Potable water):																				
Shop primed, field finished	B	A	I or A	B	B	B	D	I	B	B	B	D	I	B	--	--	--	--	B	--

MATERIAL PAINTING SCHEDULE																				
Materials and Conditions	**Paint Groups (A-N)** **Tn: Tnemec, Cb: Carboline, SW: Sherwin Williams, IP: International paint, PPG: PPG/Amercoat**																			
	Prime Coat					**Finish Coats**														
						1st					**2nd**					**3rd**				
Paint Manufacturer	**Tn**	**Cb**	**SW**	**IP**	**PPG**	**Tn**	**Cb**	**SW**	**IP**	**PPG**	**Tn**	**Cb**	**SW**	**IP**	**PPG**	**Tn**	**Cb**	**SW**	**IP**	**PPG**
Exposed to Potable water (NSF) completely shop coated, inside and out, OEM factory finished items such as Gates, Valves etc.	B	A	I or A	B	A	B	D	I	B	A	B	D	I	B	A	--	--	--	--	--
Equipment above grade, indoors, **exposed to Potable water** (NSF), completely shop coated inside and out, OEM factory finished items such as Gates, Valves etc.	B	A	I or A	B	A	B	D	I	B	A	A	D	I	B	A	--	--	--	--	--
Equipment above grade, outdoors, **exposed to Potable water** (NSF), completely shop coated inside and out, OEM factory finished items such as Gates, Valves etc.	N*	A	I or A or N*	B	B	--	D	I	B	--	--	D	I	B	--	--	--	--	--	--
Ductile Iron or steel process piping **exposed to Potable Water** (shop finished) alternate	N*	A or N*	A or I Or N*	B	B	--	A	I	B	B	--	C	I	B	--	--	--	--	--	--

MATERIAL PAINTING SCHEDULE																				
Materials and Conditions	**Paint Groups (A-N)** **Tn: Tnemec, Cb: Carboline, SW: Sherwin Williams, IP: International paint, PPG: PPG/Amercoat**																			
	Prime Coat					**Finish Coats**														
						1st					**2nd**					**3rd**				
Paint Manufacturer	**Tn**	**Cb**	**SW**	**IP**	**PPG**	**Tn**	**Cb**	**SW**	**IP**	**PPG**	**Tn**	**Cb**	**SW**	**IP**	**PPG**	**Tn**	**Cb**	**SW**	**IP**	**PPG**
MISCELLANEOUS USES:																				
Piping concealed in Masonry	B	A	A	A	B	A	A	D	A	B	A	--	D	A	B	--	--	--	--	--
Piping wrapped in Insulation	A	A	A or D	A or B	B	A	A	D	A or B	B	A	--	D	A or B	B	--	--	--	--	--
Heated Metal (Air Main Piping): Submerged, Buried and Exposed	L or M*	D or E or M*	D or M*	D	D	--	E	D	D	D	--	A	D	D	--	--	A	D	D	--
Concrete Masonry: Interior	F	--	D	--	F	D or A	F	F	F	B	D	A	D	D	B	D	A	D	D	--
Concrete: Interior excluding floors	A	G	--	--	B	D or A	A	D	D	B	D	A	D	D	B	--	--	--	D	--
Concrete: Immersion, Waste Water	A	--	--	--	D	A	J	J	J or D	D	A	K	B or K	D	--	A	--	B	K or D	--
Pipe and Duct Insulation: Exposed	A	--	--	--	B	H	B	H	H	B	H	H	H	H	B	--	--	--	--	--
PVC (Interior)	A	--	--	--	B	A	B	D	A	B	A	A	D	A	--	--	--	--	--	--

MATERIAL PAINTING SCHEDULE																				
Materials and Conditions	**Paint Groups (A-N)** **Tn: Tnemec, Cb: Carboline, SW: Sherwin Williams, IP: International paint, PPG: PPG/Amercoat**																			
	Prime Coat					**Finish Coats**														
						1st					**2nd**					**3rd**				
Paint Manufacturer	**Tn**	**Cb**	**SW**	**IP**	**PPG**	**Tn**	**Cb**	**SW**	**IP**	**PPG**	**Tn**	**Cb**	**SW**	**IP**	**PPG**	**Tn**	**Cb**	**SW**	**IP**	**PPG**
PVC (Exterior)	A	--	--	--	B	A	B	D	A	C	A	C	C	A	--	C	--	C	C	--
Gypsum Wallboard and Plaster:	G	--	--	--	G	H	G	G	G	H	H	H	H	H	--	H	H	H	H	--
Nonferrous Metal and Galvanized steel: Interior	A	--	--	--	B	A	B	D	A	B	A	A	D	A	--	A	--	D	A	--
Nonferrous Metal and Galvanized Steel: Exterior	A	--	--	--	B	A	B	D	A	C	A	C	C	A	--	C	--	C	C	--
*Require only one coat.																				

END OF SECTION

SECTION ESCR 50.61 – SEWERS IN JACKED STEEL SLEEVES

50.61.1 INTENT

This section describes construction of sewer carrier pipe in a jacked steel sleeves.

50.61.2 DESCRIPTION

(A) GENERAL

(1) The sleeves and sewer carrier pipes must be constructed to the sizes, kinds, classes and wall thicknesses of pipe specified and in accordance with the details shown on the contract drawings. The construction of the sewers herein must be by means of pipe jacking a steel sleeve with the use of slurry microtunnel boring machine (MBTM) for excavation followed by the insertion of a sewer carrier pipe.

Microtunneling is defined as the trenchless installation of the pipe by pneumatically jacking the pipe behind a remotely controlled, steerable, laser-guided MTBM. MBTM must be capable of adequately and safely counter-balancing prevailing hydrostatic and earth loads at the face of excavation and remove the excavation spoil with the use of pressurized slurry system; no other type tunnel method will be permitted.

(2) Dewatering of the ground around the tunnel shall not be permitted. Launch and receiving shafts shall be constructed of secant pile or other suitable support of excavation system that minimizes seepage into the shaft and minimizes any drawdown of the water table outside of the shaft.

(3) It must be the Contractor's responsibility to choose the type of tunnel boring machine and its equipment and accessories to be used to complete the tunnel bore.

The Contractor must replace any equipment deemed necessary in order to complete the tunnel bore. This includes the mixed ground or soil cutter head and any other required equipment. No additional or separate payment will be made for any equipment replacement that is required to complete the tunnel bore.

(B) GEOTECHNICAL CONDITIONS

Geotechnical data provided by the City is for information purposes only. The Contractor must perform the Contractor's own geotechnical investigations and assessment to ensure that the type of tunnel boring machine (together with equipment and accessories) the Contractor chooses to use is capable of completing the tunnel bore through historic gill and very soft organic organic clay and remove all materials encountered (e.g. soil, boulders, timber pile, debris, etc.).

The Contractor must thoroughly investigate the geotechnical conditions of the strata through which the tunnel boring is to be accomplished. After performing this thorough investigation the Contractor must prepare a construction report in accordance with the NYC DEP Standard Sewer and Water Specifications Section 76.11 - Construction Report for the approval of the Engineer. (See Subsection 50.61.3 - Submittals, paragraph (1)).

50.61.3 SUBMITTALS

The Contractor must submit the following:

(1) Before commencing any operations associated with the construction of sewers in jacked steel sleeves the Contractor must submit the construction report specified above. In

addition to the requirements specified in Section 76.11, the construction report must contain all investigative geotechnical information and determinations as to tunnel boring operation, and all means and methods of construction that will be required to complete the tunnel bore. The Construction Report must also state the Contractor's assumptions regarding the subsurface conditions to be encountered during shaft and microtunnel construction.

(2) Details of the MTBM the Contractor chooses to use together with required equipment and accessories. Include the following:

(a) Machine specifications (including but not limited to equipment, accessories, means and methods of spoil removal) together with a letter from the microtunneling machine manufacturer stating that the selected machine together with equipment, accessories and means and methods of spoil removal is capable of progressing through the anticipated subsurface conditions, and capable of removing spoils effectively.

(b) Details of MTBM slurry system and soil separation methods including proposed slurry formulations and calculations of the system capacity to handle flows at all proposed distances and changes of elevations to and from the MTBM.

(c) Jacking system details (jacks and jacking frames), method of operation, thrust capacity and sleeve details. Describe method of control to prevent the maximum allowable jacking force from being exceeded.

(d) Description of lubrication mix equipment and procedure for lubricating the pipe during jacking operations, including estimated volume for the anticipated soils.

(e) Active Direction Control details and means of controlling line and grade.

(f) Method for supporting the MTBM and maintaining line and grade while excavating in the very soft soils present at this site.

(3) Before commencing any operations associated with the construction of sewers in jacked steel sleeves the Contractor must submit a detailed description of the proposed method of installation including locations and dimensions of launching/receiving shafts, insertion procedures, design and method of bracing (including but not limited to type and location of spacers, and anti-floatation design) and all shop drawings required for review and app roval by the Engineer. These submittals must include procedural details to allow the Engineer to evaluate the procedure to be used. All pertinent dimensions, material properties, and design calculations must be shown.

(4) Estimated jacking force calculations and pipe material calculations must be prepared and submitted. It must be the sole responsibility of the Contractor to determine the maximum anticipated construction loads, including maximum jacking forces, Factor of Safety, and to ensure that the anticipated loads are implemented in the manufacturer's design of the pipe. These calculations must be submitted to the Engineer for review and approval, and must bear the signature and seal of a Licensed Professional Engineer, currently registered in the State of New York.

(5) Prepare and submit a proposed contingency plan for potential situations that may occur during tunneling operations. This submittal must at a minimum address the following scenarios:

(a) The MTBM hits an obstruction.

(b) Cuttings do not settle/separate with the equipment on site.

(c) The target laser is distorted by heat and/or humidity or has been knocked out of alignment. Describe which operational parameters will be observed/measured/recorded so that it can be determined if the above are occurring or have just occurred.

(d) The jacking pressures start to increase rapidly and there is reasonable concern for completing jacking operations to the receiving shaft.

(e) The MTBM “freezes” during jacking operations.

(f) Method for accessing the face of the MTBM from the receiving shaft if needed to remove an obstruction. Contractor to provide details for supporting the ground and maintaining a stable tunnel face without dewatering the ground or exceeding the allowable surface settlement along the tunnel alignment. Vertical rescue shafts are not permitted within FDR Drive.

(6) Unless otherwise provided for in the contract documents, submit a proposed plan showing location of required geotechnical instrumentation and any other Contractor proposed instrumentation. Include product information indicating the instrumentation sizes, material types, specifications, installation procedures, location and other pertinent data. The instrumentation installation specialist performing the installation of the geotechnical instrumentation must have appropriate experience and expertise with installing the instrumentation and moinitoring; proof of this experience must be included with this plan.

(7) Shaft Excavation and Support submittal requirements in accordance with NYC DEP BWSO Standard Sewer and Water Main Specifications. Shaft Excavation and Support submittal, bearing the signature and seal of a Licensed Professional Engineer, currently registered in the State of New York, must include:

(a) Detailed narrative outlining the construction sequence.

(b) Engineering calculations, assumptions, and methodologies for the design of the shaft excavation support system. The Contractor must design excavation support systems and working slabs to withstand earth and hydrostatic pressures, bottom heave, equipment loads, applicable traffic and construction loads, and other surcharge loads to allow the safe construction of the tunnel and associated structures without excessive movement or settlement of the ground, and to prevent damage to adjacent structures, streets, and utilities. Use lateral earth pressures consistent with ground conditions, soil properties (type, composition, compaction, moisture content, etc.), water table, etc., described in the contract documents and in accordance with NYC, AISC and ACI code provisions, as applicable. Each component of the shaft excavation and support system must be designed to safely support the maximum combination of loads and other conditions that may occur during construction. These submittals must consider all beginning, intermediate and final construction stages of shaft installation. The Contractor must also submit the Contractor’s groundwater control system.

(c) Break-out and Break-in plans indicating type of support installed to transfer loads and maintain excavation support, groundwater control, and stability of the excavation when a MTBM exits or enters a shaft. Contractor must utilize shaft launch and exit seals to prevent inflow of groundwater, slurry, lubrication and soil. Seals must be sized to accommodate microtunneling boring machine and jacking pipe, and must not impair the performance of the shaft excavation support system. Groundwater inflows at each seal must be less than one (1) gallon per minute, and total soil inflows at each seal must be less than two (2) cubic feet for the entire duration of the jacking operation. Seal

design/installation must incorporate localized ground improvement as necessary to meet these criteria.

(d) Microtunneling machine thrust block design and details for the launching shaft including calculations demonstrating that the ground behind the thrust block has adequate bearing capacity for the maximum anticipated loads developed by the main jacking system. Provide details for treating or reinforcing the ground behind the thrust block if necessary, to achieve adequate bearing capacity. The thrust block must be perpendicular to the proposed pipe alignment. The thrust block must be designed to support the maximum jacking pressure developed by the main jacking system.

Review of the Contractor's Shaft Excavation and Support submittal by the Engineer does not relieve the Contractor of the Contractor's responsibility to provide and maintain an adequate support system achieving the specified requirements.

(8) Excess Materials Disposal Plan: Excess materials disposal plan must include treatment (as applicable), transportation methods and routes, disposal location details for excess excavated materials (soil, rock, etc.), and disposal methods for groundwater generated during construction of tunnel and shafts. Included in this plan must be estimated quantities for disposal of all excess excavated materials and groundwater.

(9) Proposed insertion plan for grout fill of annular space between the sewer carrier pipe and steel sleeve. Grouting fill of annular space plan must include details of grout fill materials (including source), installation procedures, equipment utilized, grout fill quality control measures, and means of protecting new sewer facilities during grout fill placement including carrier pipe buoyance force calculations, bulkhead design and carrier pipe blocking details. Such method must be capable of filling all voids between the steel sleeve and the carrier pipe for the entire length, and must not be capable of damaging the sewer carrier pipe and it's jointing, nor capable of damaging or misaligning the brace and support spacers installed to align and insulate the sewer carrier pipe, nor cause any leakage of grout to the outside soil area of the steel sleeve.

(10) Experience qualifications for the Contractor/Subcontractor and key personnel performing the tunneling in accordance with Subsection 50.61.6.

(11) Daily reports and records of grout placement including but limited to volumes placed, stationing of placement, injection locations, pressures, unit weight test results, time of placement, and designation of cylinder samples prepared that day.

(12) Compressive strength test results from a certified testing laboratory.

(13) Shop drawings must be submitted in accordance with all applicable provisions of Subsection 40.05.5 - Shop Drawings, as required. Design criteria must be submitted in accordance with all applicable requirements of Subsection 40.05.6 - Design Criteria, as required.

(14) All the above must be submitted as a complete package. All designs must bear the signature and seal of a Licensed Professional Engineer, currently registered in the State of New York

(15) No work associated with the construction of sewers in jacked steel sleeves must commence until the Contractor receives all required approved shop drawings from the Department of Design and Construction, Division of Infrastructure.

(16) Upon the completion of microtunneling/pipe-jacking activities the Contractor will be required to submit a report that will include copies of all Daily Logs along with a description

of any unusual events or problems encountered during microtunneling/pipe-jacking operation. In addition, all numerical data must be entered into Excel Format. A copy of the Excel file must be submitted along with this report.

50.61.4 MATERIALS

(A) Ductile iron carrier pipe must comply with the requirements of Section 21.06 and must be Class 56 unless otherwise specified.

(B) Steel Sleeves must have an outer diameter (O.D.) and must have a minimum sleeve thickness as shown on the contract drawings. The steel must conform to ASTM A134 (plates: ASTM A283, Grade C) API std. 5L, Grade B. The jacked steel sleeve must be designed to withstand jacking thrust as well as external loads (including but not limited to skin friction, friction due to weight of pipe, face pressure due to strata type, and face pressure required to counteract slurry pressure). A minimum factor of safety of 2.5 must be used for jacking thrusts. Hydrostatic tests will not be required for steel sleeves.

All connections between successive steel sleeve pipe lengths must be continuously butt-welded. Welds must be made in conformance with AWS D1.1. However, mechanical type T7 Permalok joint connections with a seal pass weld at each joint will be permitted in lieu of butt welded joints between successive steel sleeve pipe providing this joint can be shown to be capable of withstanding the installation loads and will not result in excessive deflection of the pipe.

(C) Joints for ductile iron pipe must comply with the requirements of Subsection 21.06.5.

(D) Grout utilized to fill the voids between the steel sleeve and the sewer carrier pipe must be Low Weight Cement Grout as described below:

Low Weight Cement Grout:

(a) Grout must consist of neat Portland cement, water, Mearlcrete Foam Liquid concentrate and other materials as manufactured and recommended by the Aerix Industries or approved equal.

(b) Portland cement must comply with the requirements of General Specification 11 - Concrete, as modified in Section 23.01, and must be Type II.

(c) Mixing water must be a maximum of six (6) gallons per bag of cement (water/cement ratio is 0.53), and be potable, free from deleterious amounts of acid, alkali, salts, oils and organic materials.

(d) Wet Density must be 95-lb/ft^3 maximum.

Dry Density must be 90-lb/ft^3 maximum.

Minimum 7-Day Compressive Strength must be 300-psi.

Minimum 28-Day Compressive Strength must be 1,000-psi.

(E) Grout utilized to fill the voids between the outside of the jacked sleeve and the soil/rock must be Pressure Grout as described below:

Pressure Grout:

(a) Pressure grout must consist of neat Portland cement or it must be mixed in a proportion by volume of one (1) part Portland cement and one (1) part sand or it must be mixed by volume of one (1) part Portland cement to one and one-half (1-1/2) parts lime flour and one-fiftieth (1/50) part Interplast IV.

(b) All parts must be mixed with clean fresh water to the desired consistency. In no case must more than eight (8) gallons of water be mixed per bag of cement.

(c) Shall have a minimum compressive 28-day strength of 500-psi.

(d) A set of three (3) pressure grout ports must be positioned 120 degrees apart on the steel sleeve and each set must be spaced apart 5 feet longitudinally within the steel sleeve.

(F) Casing spacers, if selected for use by Contractor for supporting the carrier pipe within the jacked pipe, shall be Model SSI with EPDM skids by Advance Products and Systems, Inc., Style CCS by Cascade Waterworks Mfg. Co., Black Widow SS by Spider Mfg., or approved equal.

50.61.5 METHODS

(A) GENERAL

The Contractor must install launching and receiving shafts at the locations and in accordance with the requirements shown, specified, ordered or approved. Excavation support system for each shaft must be as shown, specified, ordered or approved. Shafts must be properly constructed and braced to withstand both external loads (soil, water, etc.), and internal jacking loads. The Contractor must furnish, install and remove to the extent required; thrust blocks or whatever provisions may be required in driving the sleeve forward. A jacking frame with integrated pipe guides or steel rails or beams embedded in concrete must be used in the launching shaft for placement and alignment of each piece of sleeve during installation procedures. Special care must be taken when setting the pipe guide rails to ensure correctness of the alignment, grade and stability. Jacking operations must not commence until the concrete thrust block has attained the required strength.

The steel sleeve must be jacked into position by the use of jacks of sufficient capacity to push the pipe and MTBM through the existing strata (soil and/or rock). Upon completion of the jacked section (launching shaft to receiving shaft) the Contractor must immediately pressure grout from the interior of the steel sleeve in conformance with Subsection 50.61.10.

The Contractor must follow the recommendations of the pipe manufacturer regarding the installation of the sewer carrier pipe. The recommended installation method used by the Contractor must be such that no damage will occur to the carrier pipe when it is inserted or during grouting operations.

The Contractor must install the sewer carrier pipe to the line and grade required within the steel sleeve, as shown on the Contract Drawings. Sewer carrier pipe must be properly braced and supported with spacers that are electrically insulated from the steel sleeve. The brace and support spacers must be installed and positioned in accordance with the manufacturer's recommendations and must not inhibit the flow of grout. The Contractor must submit design and method of bracing (including but not limited to type and location of spacers, and floatation design concerns) prior to installation of carrier pipe for approval by the Engineer. Proper precautions must be taken by the Contractor to prevent floatation or motion of the carrier pipe during the grouting operation.

Dewatering around the excavated shafts is not permitted. Groundwater infiltration in the excavation shall be prevented as much as practical. Dewatering activities must not impair the performance of the microtunneling equipment or process. The Contractor must meet all applicable requirements for groundwater treatment and disposal.

(B) CONTROL OF LINE AND GRADE

(1) Lines and grades must conform to the requirements of Subsection 10.09 and as amended herein. The Contractor must establish the baselines and benchmarks in accordance with this contract.

(2) The Contractor must submit to the Engineer copies of field notes used to establish all lines and grades. However, the Contractor remains fully responsible for the accuracy of the Contractor's work. All survey work must be performed under the direction of a New York State Licensed Surveyor and all submissions must be sealed and signed by the Licensed Surveyor.

(3) If there is any movement during construction, it must be the Contractor's responsibility to detect and correct it as required. When the excavation is off-line or grade, the Contractor must return to the design line and/or grade over the remaining portion of the drive at a rate of no more than one (1) inch per twenty-five (25) feet.

(4) The microtunnel excavation and run of steel sleeve must be controlled in such a manner that the deviation of the steel sleeve from grade is not more than one (1) inch nor from line more than two (2) inches. The Contractor must make note of all possible encumbrances and structures in the line of work, which may restrict clearances.

(5) Record the exact position of the MTBM at least once per shift to ensure the alignment is within the specified tolerances. Make the survey at the MTBM to allow immediate correction of misalignment before allowable tolerances are exceeded. The tunnel guidance system may be used; however, select times to measure and record this information after the air temperatures have stabilized throughout the pipe to ensure accurate readings.

(C) EQUIPMENT

(1) The microtunnel boring machine (MTBM) must be a pressurized face, slurry machine manufactured by a company that specializes in the design and fabrication of this type of equipment and has at least ten (10) years of experience. The MTBM must be capable of controlling the volume of excavated material removed from the excavation face at all times. In addition, the MTBM machine must:

(a) Be capable of maintaining the excavation face under wet, dry and adverse soil conditions and prevent loss of ground through the machine. The MTBM must provide satisfactory support of the excavation face at all times.

(b) Be articulated to allow steering in the ground conditions encountered.

(c) Incorporate a suitable seal between the microtunnel boring machine and the leading pipe.

(d) Provide protection to the electric and hydraulic motors and operating controls against water damage.

(e) Use bi-directional drive on the cutter-head wheel, and/or adjustable fins or other means, to control roll.

(f) Be capable of exerting a controllable pressure against the face, during both excavation and shutdown periods, to support the excavation face, prevent

groundwater inflows, prevent running and flowing soils, and prevent loss of ground.

(g) Be capable of controlling the volume of excavated material removed at the excavation face and coordinating the machine advance rate to avoid over excavation. The MTBM must include an automated spoil transportation slurry system that balances the groundwater and face pressures by the use of a slurry pressure balance system. System must be capable of adjustment required to maintain stability of the excavation face for the subsurface conditions to be encountered and must monitor and continuously balance the groundwater and face pressure to prevent loss of slurry or uncontrolled groundwater inflow.

(h) Be fully steerable both horizontally and vertically.

(i) Be capable of injecting lubricant between sleeve and the ground to reduce friction between sleeve and ground. The Contractor to determine the need for lubrication of the sleeve pipe exterior during tunnel excavation and jacking pipe installation. Lubrication equipment shall be capable of operating continuously.

(2) Guidance of the microtunnel boring machine must be through a remote console by means of active direction control, in or adjacent to the launching shaft. At a minimum, the thrust force, rate of advance, distance along heading, deviation from line and deviation from grade must be monitored and displayed on the remote console.

(3) Operate systems following manufacturer's instructions and recommendations. Copies of operations manuals shall be made available to the Engineer and operational personnel on site.

(4) Test full system in accordance with manufacturer's recommendations on completion of set-up and before commencing tunneling operations. Record the test results and provide a copy of the test report to the Engineer.

(5) Before commencement of the drive, demonstrate to the Engineer that required set up procedures and system checks are completed and the required materials are at hand to commence the drive.

(D) SAFETY

The Contractor must carry out the Contractor's operations in strict accordance with OSHA, NYC and the Manufacturer's safety requirements.

The Contractor must provide adequate ventilation in the shafts at all times. Air quality in the shafts must be tested immediately prior to each change in shift. Air quality in the jacked pipe must be tested prior to personnel entry and periodically thereafter as required by law.

The Contractor must provide adequate lighting in the tunnel shafts and around equipment being utilized. Power and lighting circuits must be separated and thoroughly insulated.

(E) GEOTECHNICAL INSTRUMENTATION

The Contractor must install, monitor, and provide reporting for geotechnical instrumentation at the locations and in accordance with the requirements shown, specified, ordered or approved.

50.61.6 QUALIFICATIONS

The microtunneling/pipe-jacking Contractor or subcontractor performing the work required under this contract must be experienced in work of this nature and must have successfully completed a minimum of two (2) tunneling projects in the last five (5) years using pressurized face microtunneling/pipe-jacking equipment with a closed face tunnel shield and positive controlled face pressure. One of the successfully completed projects must have been in similar ground conditions (strata type and hydrostatic head), as to those anticipated on this contract. The Contractor must submit a description of such projects, which must include at a minimum, a listing of the locations, dates of projects, owners, pipe types and sizes, type of equipment utilized, ground conditions, drive lengths, maximum line and grade deviations and other information relevant to the issue of the successful completion of such projects.

The microtunneling/pipe-jacking project superintendent must have at least five (5) years of recent previous experience in tunneling using the proposed MTBM equipment. Experience shall be in a minimum of five (5) previous tunneling projects of similar size, drive lengths and ground conditions with at least two (2) projects with a minimum size of 48-inch diameter. Tunneling operations shall be performed under the direction of tunneling supervisor who shall be in responsible charge throughout the tunneling operation.

The microtunneling/pipe-jacking machine operator(s) must be experienced in tunneling with prior knowledge and ability to properly operate the MTBM systems being employed. All operators shall have minimum of five (5) years of experience performing tunneling of similar size, drive lengths and ground conditions with at least two (2) projects with a minimum 48-inch diameter.

Prior to the start of work the Contractor will be required to submit the name and resume of the microtunneling/pipe-jacking subcontractor for approval.

50.61.7 REPORTING REQUIREMENTS

The Contractor must maintain a Daily Log of all microtunneling/pipe-jacking activities. A copy of this log must be submitted to the Engineer on a daily basis. The log, at a minimum, must record the following in relationship to the advancement rate: (Advancement rate utilized for recording must be in one (1) foot intervals, unless otherwise directed by the Engineer.)

(1) Date and Time compared to the advancement rate.

(2) Total Jacking Pressures compared to the advancement rate, including all peak pressures.

(3) Cutter Head Torque compared to the advancement rate.

(4) Position of the MTBM with respect to the design line and grade.

(5) Amounts, times and locations of lubrication.

(6) Unusual events or problems encountered.

(7) Upon completion of a bore (launching shaft to receiving shaft) the locations, pressures and amounts of grout placed to fill all voids between the outside of the jacked sleeve and the soil/rock.

50.61.8 CLEANING

Prior to the insertion of the carrier pipe the Contractor will be required to remove and properly dispose of all sediments and deposits from within the steel sleeve.

The Contractor must furnish all water and pumping equipment necessary for the cleaning operation. The sleeve must be clean and entirely free from projections that might interfere with the insertion of the carrier pipe through it.

50.61.9 INSPECTION AND TESTING

Immediately after the completion of the cleaning operation, the Engineer will conduct (unless waived in writing by the Engineer) a visual inspection of the steel sleeve for any defect or leakage so those repairs, if necessary, can be made. No carrier pipe must be installed until authorized by the Engineer.

The Contractor must provide the Engineer, without charge, all facilities and assistance necessary to perform this visual inspection of the steel sleeve, and for obtaining any information the Engineer requires in order to access the progress and manner of the work performed.

The entire installation procedure must be rigorously inspected as herein specified, but inspection must not relieve the Contractor of responsibility to furnish material and perform work in accordance with the specifications. If at any time it is found that the pipe insertion procedure is not in accordance with these specifications, the pipe so installed will be subject to rejection.

After the sewer carrier pipe has been inserted into the steel sleeve and prior to grouting between the steel sleeve and the carrier pipe, the Contractor must test for leakage the sewer carrier pipe in accordance with Section 40.11 – Leakage And Leakage Tests For Sewer Lines.

Leakage or infiltration in excess of the specified amount must be located and stopped and all visible leaks must be stopped to the satisfaction of the Engineer, all at the Contractor's own expense.

The Contractor shall perform the following tests on specimens of the grout fill material placed outside of the jacking pipe and on specimens of low weight cement grout placed around the carrier pipe:

1. Unit Weight: Unit weight (wet density) tests shall be made from the first batch mixed each day, after a change in mix design, every 30 minutes during pumping, and from each batch of grout from which compression test cylinders are made.

2. Compressive strength test cylinders shall be made in the field, cured and stored in the laboratory, and tested in accordance with ASTM C495. One set of six (6) test cylinders (3 inches by 6 inches) shall be made for each shift when grout is placed. Each set of compressive strength test cylinders shall be marked or tagged with the date and time of day the cylinders were made, the location in the work where the grout represented by the cylinder was placed, batch number and unit weight (wet density). One additional set of test cylinders shall be made from each additional 25 cubic yards, or major fraction thereof, placed in any one shift. Two cylinders from each set shall be tested at an age of 7 days, 28 days and 56 days.

50.61.10 GROUTING

(A) GROUT FILL OUTSIDE JACKED SLEEVE

Upon completion of a jacked section (launching shaft to receiving shaft) the Contractor must immediately pressure grout from the interior of the steel sleeve. Pressure grout must be placed under pressure to fill all annular voids between the outside of the jacked sleeve and the soil. Pressure grouting must not cause heave or damage to the surface. The pressure must not exceed 8 psi.

Systems of standard pipe, fittings, hose and special grouting outlets embedded in the sleeve must be provided by the Contractor. Care must be taken to insure that parts of the system are maintained free from dirt. Cement grout must be forced under pressure into the grouting connections. Grouting must start at the lowest connections and must proceed until grout begins to flow from upper connections. Connections must then be made to those holes and the operation continued to completion. During the grouting process, each grout plug must be removed and the grout-mixing machine must be connected to the hole by means of a hose and nipple cut to the same thread as the screw plug.

The sleeve must have grout holes equipped with pipe half couplings The two (2) inch standard pipe half couplings welded into the holes in the sleeve must be provided with threaded cast iron plugs. Plugs must be no less than five-eighths (5/8) inch in diameter.

Apparatus for mixing and placing grout must be capable of mixing effectively and stirring the grout and then forcing it into the grout connections in a continuous uninterrupted flow. When grouting is completed the grout plugs in each section must be screwed into the grout holes for their full length and tightened to provide a watertight seal.

The Contractor must take all necessary precautions to prevent grout from escaping and setting on inner surface of steel sleeve. The Contractor must remove such grout and restore the surface to its original condition.

The Contractor must provide the Engineer all facilities necessary for the inspection of pressure grouting operation to ensure complete filling of the annular void. These facilities must include removing of grout plugs as required for inspection behind the steel sleeve. Any voids found must be grouted at once as directed by the Engineer.

The Contractor must keep and furnish to the Engineer an accurate log of grouting operations, pressures, rates of pumping, amount of cement for each change in water/cement ratio and such other data as are required by the Engineer. The log must be supplied by the Contractor to the Engineer or the Engineer’s representative after each shift.

After completion of pressure grouting the sewer carrier pipe must be installed to the line and grade required within the steel sleeve.

(B) GROUT FILL AROUND CARRIER PIPE

After the carrier pipe is satisfactorily installed and passes inspection and testing, the carrier pipe must be secured to the steel sleeve at each end with a 12-inch thick minimum concrete plug. Unless otherwise shown on the contract drawings, the Contractor must submit along with the required submittal in Subsection 50.61.3 the design of these concrete plugs. The design of these concrete plugs must incorporate a method for securing the concrete plugs to the ends of the steel sleeve and carrier pipe so as to be capable of withstanding the grouting pressures without slippage or blow-out at the ends. The concrete plugs design must include an air relief port located at the highest (top) point of the plug.

After approval by the Engineer the entire annular space between the inside of the steel sleeve and the outside of the sewer carrier pipe must be filled with Low Weight Cement Grout in one continuous uninterrupted operation to prevent occurrence of any voids between the steel sleeve and the carrier pipe.

The grout fill must be placed by pneumatic or pumping equipment under a pressure between to ensure that the entire void space has been evenly and completely filled. The pressure must be continuously monitored and care must be taken to avoid damaging the

carrier pipe. Equipment and methods of placement of the grout fill will be subject to review by the Engineer. Mixing or pumping equipment that may damage the foam must not be used.

The volume of the grout being placed must be monitored and recorded. A comparison between the theoretical volume and the actual volume of grout placed must be done and any discrepancies must be brought to the attention of the Engineer.

The Contractor must also fill the holes used to place the grout.

50.61.12 MEASUREMENT

The quantity of sewer in jacked steel sleeve to be measured for payment must be the number of linear feet of each size, kind, type, class and wall thickness of sewer carrier pipe together with jacked steel sleeve incorporated in the work, complete, as shown, specified or required, measured horizontally along the center line of sewer. Measurement must be from inside face of launching shaft to inside face of receiving shaft.

50.61.13 PRICE TO COVER

The contract price for “SEWERS IN JACKED STEEL SLEEVES” must be the unit price bid per linear foot for each size, kind, class and wall thickness of sewer carrier pipe together with jacked steel sleeve and must cover the cost of all labor, materials, plant, equipment, samples, tests and insurance required and necessary to construct the sewers in jacked steel sleeves to the sizes and to the lines and grades shown, including the earth removal and disposal of all materials of whatever nature encountered; additional subsurface investigations; geotechnical instrumentation and related monitoring and reporting; all sheeting and bracing; pumping; fluming; bridging; connections; maintaining flow in sewers; backfilling; etc.); launching and receiving shafts, complete (including temporary excavation supports, groundwater control, thrust block, jacking frame, launch and exit seals, etc.); installation of steel sleeves; grouting required to fill voids between the outside of the jacked steel sleeve and the soil/rock; cleaning of steel sleeves; application of protective coating and top coating to interior surfaces of concrete carrier pipe; preparation, submittal and approval of all required shop drawings and designs; obtaining of all necessary permits; and furnishing and installing all other items necessary to complete this work and do all work incidental thereto, all in accordance with the contract drawings, specifications and standards and as directed by the Engineer.

In addition, included in the price hereunder must be the cost of all labor and materials necessary to remove all specified and ordered existing sewers, manholes, structures and appurtenances that may be in the launching and receiving shafts and in the line of the work and to do all the work incidental thereto, all in accordance with Subsections 10.13 and 10.28 of the specifications and as directed by the Engineer.

Payment will be made under:

Item No.	Item	Pay Unit
ESCR 50.61C42D66	Sewers in Jacked Steel Sleeves	L.F.

END OF SECTION

HAZ - PAGES

SPECIFICATIONS FOR HANDLING, TRANSPORTATION AND DISPOSAL OF NONHAZARDOUS AND POTENTIALLY HAZARDOUS CONTAMINATED MATERIALS

NOTICE

THE PAGES CONTAINED IN THIS SECTION ARE ISSUED FOR THE PURPOSE OF SPECIFYING THE REQUIREMENTS OF THE CONTRACT DOCUMENTS AND ARE MADE PART OF SAID CONTRACT DOCUMENTS.

(NO TEXT ON THIS PAGE)

TABLE OF CONTENTS

SECTION ESCR 4.25 Recovery Well Installation 1
SECTION ESCR 8.01 Handling, Transporting, and Disposal of Potential and Identified Contaminated and Hazardous Materials 11
SECTION ESCR 8.01 C1 – Handling, Transportation, and Disposal of Non-Hazardous Contaminated Soil 16
SECTION ESCR 8.01 C2 – In-Situ and Ex-Situ Soil Sampling and Analysis for Waste Disposal Parameters 23
SECTION ESCR 8.01 H – Handling, Transportation, and Disposal of Hazardous Soils 26
SECTION ESCR 8.01 S – Health and Safety 32
SECTION ESCR 8.01 W1 – Removal, Treatment, and Disposal / Discharge of Contaminated Water 37
SECTION ESCR 8.01 W2 –Sampling and Testing of Contaminated Water 43
SECTION ESCR 900-SSVS – Sub-Slab Venting System 45

(NO TEXT ON THIS PAGE)

SECTION ESCR 4.25 RECOVERY WELL INSTALLATION

4.25.1 INTENT.

This document defines the requirements for the installation of Non-Aqueous Phase Liquid (NAPL) recovery wells as part of the recovery well network included in the New York State Department of Environmental Conservation (NYSDEC)-approved Mitigation Work Plan (MWP) for Manufactured Gas Plant (MGP)-Related NAPL Contamination. The Engineer, in consultation with NYSDEC, will determine the need for the subsequent well installations beyond the initial recovery wells, which are shown on the Drawings. The Contractor is responsible for the installation of all recovery wells as required by NYSDEC in compliance with NYSDEC-approved MWP for MGP-Related NAPL Contamination.

4.25.2 RELATED DOCUMENTS.

(A) Drawings and general provisions of the Contract apply to this Section.

(B) Related Documents

(1) East Side Coastal Resiliency: Mitigation Work Plan for MGP-Related NAPL Contamination [and associated MGP Waste Management Plan (WMP) and Health and Safety Plan (HASP)], prepared by AKRF under the Hazen and Sawyer / AKRF JV.

(2) East Side Coastal Resiliency: Remedial Action Plan (RAP) [and associated Construction HASP (CHASP), prepared by AKRF under the Hazen and Sawyer / AKRF JV.

(3) East Side Coastal Resiliency: Supplemental Subsurface Investigation Report - Borough of Manhattan, New York, prepared by AKRF under the Hazen and Sawyer / AKRF JV.

(4) East Side Coastal Resiliency: Environmental Subsurface Investigation Report for Parallel Conveyance & Isolation Gates, Borough of Manhattan, New York, prepared by AKRF under the AKRF / KSE JV.

(5) East Side Coastal Resiliency: Supplemental Subsurface Investigation Report - Borough of Manhattan, New York, prepared by AKRF under the Hazen and Sawyer / AKRF JV.

(6) East Side Coastal Resiliency Project Area One: Subsurface Exploration Report - Borough of Manhattan, New York, prepared by AKRF under the Hazen and Sawyer / AKRF JV.

(7) East Side Coastal Resiliency Project Area Two: Subsurface Exploration Report - Borough of Manhattan, New York, prepared by AKRF under the Hazen and Sawyer / AKRF JV.

(8) Remedial Investigation Report, Operable Unit 2 (OU2) – Former East 21st Street Works – Site # V00536, New York, New York, AECOM.

(9) Remedial Investigation Report, Stuyvesant Town Former Manufactured Gas Plant Sites, VCA Index D2—0003-02-08, AECOM.

(10) Remedial Investigation Report for Operable Unit 2 – East 11th Street Works Site – NYSDEC Site No. V00534, New York, New York, ARCADIS.

4.25.3 DESCRIPTION.

(A) The Contractor will comply with all requirements of the Contract Documents. No work under this section will be performed without the supervision of the Engineer.

(B) Installation of all recovery wells will be performed and paid under this section.

4.25.4 SUBMITTALS.

(A) INITIAL SUBMITTALS

(1) The Contractor will obtain all applicable permits before commencing any work and provide them to the Engineer.

(2) The Contractor will prepare a site Health and Safety Plan (HASP). All Contractor site personnel will be required to read and sign the HASP.

(3) The Contractor will submit a Recovery Well Installation Plan for review and approval by the Engineer in accordance with this section 30 days prior to the start of work. The Plan must include:

(a) Statement of Qualifications. The Statement should provide sufficient data and information to demonstrate that the entity performing the work is fully experienced in environmental drilling operations.

(b) Lists of all materials and equipment proposed for the work. List will include all materials for the construction of the recovery wells, protective clothing/equipment, drilling equipment/rigs, and drums. The Contractor will submit materials data sheets for all materials for which such data sheets are available. Submit specification sheets for drill equipment/rigs.

(c) A copy of the certificate of license that the entity performing the drilling work is a licensed drilling contractor in the State of New York.

(d) The name, address, and applicable permits of the proposed disposal/recycling facility(s) for disposal of drilling cuttings and fluids.

(e) Disposal Facility disposal characterization sampling requirements, including, but not limited to: number of samples, parameters, type of analyses and methods of sampling and analysis.

(f) Names, addresses, and 6 New York Codes, Rules and Regulations (NYCRR) Part 364 Permits of all transporters.

(g) Proof of permit, license or authorization to transport waste in all states through which waste will be transported.

(h) All local, state, and federal permits required for the transport and disposal of all waste resulting from the work of this section.

(i) Equipment decontamination procedures and setup.

(j) Material Safety Data Sheets for any products proposed for use on site.

(k) Spill prevention and response procedures.

(B) DURING WORK SUBMITTALS

(1) Submit documentation of final satisfactory disposal (i.e., manifests, weight tickets) within 30 days of disposal in accordance with the Recovery Well Installation Plan.

(C) POST PROJECT/CONTRACT CLOSEOUT SUBMITTALS

(1) Compilation of all completed and signed waste shipment record forms, bills of lading, manifests, and disposal receipts pertaining to this work.

(2) As-Built Drawings: Provide as-built drawings giving actual locations, construction details, and depths for each of the installed recovery wells.

4.25.5 GENERAL REQUIREMENTS.

(A) All work must be accomplished in accordance with Federal, State, and local requirements and accepted safety standards. Before initiating the work, consult applicable regulatory and permit requirements with the appropriate government agencies. Contractor is responsible to advise the Engineer or his/her designated representative of any conflict between applicable regulatory requirements and this specification.

(B) Recovery well installation work cannot commence until the cutoff wall and flood wall installation is complete for the area in closest proximity to an individual proposed recovery well. If a recovery well is proposed in an area where re-grading and/or material import for increasing elevation is proposed, the recovery well installation work cannot commence until the regrading and/or material import work have been completed.

(C) The Contractor will obtain all applicable permits before commencing any work.

(D) The Contractor will call for utility mark outs from the New York City/Long Island One Call Center prior to the commencement of work. If a proposed recovery well location is in conflict with utilities, subsurface structures, or other features, the Engineer will determine the location of the needed offset in coordination with the Contractor. The Contractor is responsible to protect both marked and unmarked existing utilities and structures during the work. Private utility mark-outs and/or pre-clearing borings utilizing soft-dig technologies may also be conducted as deemed necessary by the Contractor.

(E) Drilling equipment is expected to be decontaminated prior to arrival at the Site and also after each boring and/or recovery well installation. Potential additional decontamination may be requested at the discretion of the Engineer.

(F) The City reserves the right to inspect all work performed under this section. In addition, the Engineer reserves the right to reject all work that does not comply with the terms of this section. The City will not be held accountable for any costs associated with the rejection and repair or replacement of work not performed in accordance with this section. The Engineer must approve any deviations to this section in writing. The work, as defined by this section, will be completed in full by the Contractor within the mutually agreed upon schedule.

4.25.6 SPECIAL REQUIREMENTS.

(A) The Contractor will attend a kick-off meeting with the Engineer prior to the onset of this work.

(B) Personnel may be exposed to MGP hydrocarbon liquids, vapors, or wastes during this work that may require specialized training and the use of personal protective equipment (PPE).

(C) MGP Hydrocarbon Substances: Personnel working on-site will be made aware of appropriate health precautions. Symptoms of intoxication may result when high concentrations of MGP hydrocarbon vapors are inhaled. The following health precautions are suggested:

(1) Minimize the chance of inhaling MGP hydrocarbon vapors.

(2) Keep MGP liquids away from eyes, skin, and mouth. They are harmful if ingested.

(3) Use soap and water, or waterless hand cleaner, to remove any MGP product or associated coal tar from the skin. Do not use gasoline or similar solvent to remove oil or grease from the skin.

(4) Avoid using hydrocarbon-soaked leather goods.

(5) All disposable PPE (i.e., gloves, masks, boot covers, coveralls, caps, etc.) will be disposed of off-site on a daily basis by the Contractor. If heavily soiled, this material should be drummed and properly disposed of at a facility licensed to handle hydrocarbon-contaminated materials.

(6) Keep working area clean and well ventilated.

(7) Spills/contamination will be reported to the Engineer immediately. The Engineer will notify the appropriate regulatory agency(s) for any spill reporting.

(8) Clean up spills promptly. The Contractor will be equipped with oil sorbent materials. These materials will be drummed or otherwise properly contained and disposed of at a facility licensed to handle hydrocarbon-contaminated materials.

(9) The health and safety of the Contractor's employees and subcontractors to the Contractor is the sole responsibility of the Contractor.

4.25.7 AUTHORITY TO STOP WORK.

(A) Causes for suspension/stopping of work may be at any time if a determination by the Engineer is made that conditions are not within those set within this section, applicable regulations, and/or the RAP, MGP WMP, or associated HASP/CHASP. The stoppage of work will continue until conditions have been corrected to the satisfaction of the Engineer. Standby time taken to resolve any problems will be at no additional expense to The City.

4.25.8 PREPARATION.

(A) SITE SECURITY

(1) The perimeter of the immediate work area will be secured with fencing or equivalent equipment to secure the site and prevent entry by non-site personnel.

(2) The Engineer will inspect the security measures prior to the start of work and any requested modifications will be made in a timely manner.

(3) Exits/entrances to the active work area or site perimeter must be secured with a locking gate, and all gates must be locked and secured during non-business hours.

(B) EROSION AND SEDIMENT CONTROLS

(1) Best management practices related to erosion and sediment controls must be implemented. The control measures may include, but not be limited to procedures for perimeter site controls, stabilized construction pads at each construction entrance, equipment decontamination, and dust suppression, as appropriate.

(2) The Engineer will conduct routine inspections and any requested maintenance, repairs, or modifications will be made in a timely manner.

(C) ODOR AND VAPOR MITIGATION

(1) As necessary, and as directed by the Engineer, the Contractor will implement odor and vapor mitigation measures to ensure odor and vapors are migrating outside the work zone.

4.25.9 MATERIALS.

(A) The Contractor will supply all labor, materials, equipment, services, insurance, and incidentals necessary or required to perform the work in accordance with applicable governmental regulations and this section.

(B) EQUIPMENT

(1) Equipment, drill rigs, storage containers, and water tanks brought on-site will be clean and decontaminated prior to entry to the Site.

(2) Storage containers utilized for the storage and/or transport of contaminated materials will be structurally sound and tight to prevent leakage or spillage of materials. United States Department of Transportation (DOT)-approved containers and drums will be provided for storage, transportation, and disposal of solid and liquid wastes associated with the management of potentially contaminated materials prior to and following characterization of waste.

(3) Drilling operations will be performed utilizing rotosonic drill rigs.

(C) WATER

(1) Water used for decontamination or other purposes may be obtained from any clean source. The Contractor will procure any permits required.

(2) Water generated from equipment decontamination and well development must be containerized in 55-gallon drums for disposal off-site in accordance with all local, state, and federal regulations. Owner and other Contractors to coordinate disposal.

(D) WELL MATERIALS

(1) All materials and equipment to be furnished under this section will be new and of the latest standard products as advertised in printed catalogs by reputable manufacturers. All recovery wells will be constructed of a 6-inch diameter solid stainless-steel riser, 0.020-inch slotted stainless steel screen, and a 5-foot solid stainless-steel sump at the base. The pipe will be manufactured in strict compliance with ASTM A181/A181M. The recovery wells will be finished at the surface with labeled steel manhole covers and apron.

4.25.10 METHODS.

(A) Verification of Conditions

(B) Contractor and, if applicable, Contractor’s subcontractor for waste disposal, will be held to have field-verified the types and quantity of wastes to be removed and will have become familiar with all variable field conditions existing at the site before the submission of bid(s) for the Contract work.

(C) Contractor will notify the Engineer 30 days in advance of work associated with this section.

(D) PROTECTION OF EXISTING FACILITIES AND STRUCTURE

(1) The Contractor will notify the Underground Utilities Call Center a minimum of three (3) days before any intrusive activities.

(2) Limited access is available to all drilling locations. Contractor is responsible for reviewing work areas and providing equipment to accomplish the work.

(3) In the event that subsurface work at any given drilling location must be resumed during a subsequent work shift, the Contractor will temporarily cover the subsurface penetration in a manner that eliminates tripping hazards and also cordon off the area to eliminate all other safety hazards.

(4) Contractor will maintain the Site in a manner that eliminates tracking of soil off-site or to portions of the Site that are outside of the designated work areas.

(5) The Contractor will take precautions to ensure that project operations do not cause interference with nearby vehicular and pedestrian traffic and are protective of the on-site workers and visitors, occupants/users of the area, and the general public. Traffic barriers, signs, or similar warnings may be required to control traffic flow in the work area. If Contractor's operations cause damage, harm, upset, or similar impact to roads or private/public property, the Contractor will remedy such impact to the satisfaction of the Engineer and at no additional cost to The City.

(E) PERMITS

(1) The Contractor will acquire all permits and approvals necessary to perform the work, including, but not limited to, NYC Department of Buildings (DOB), NYC Department of Parks and Recreation, and NYC DOT. The Contractor will acquire all permits to complete the work, including any other permits not specified herein that may be required by federal, state, or local agencies.

(F) The Contractor will perform odor, dust, and vapor mitigation measures at the direction of the Engineer. The Engineer will conduct air monitoring in accordance with the RAP (which includes a CHASP) and MGP WMP in work zones and surrounding areas.

(G) All drilling work will be performed using two rotosonic drill rigs and crews working concurrently unless otherwise approved by the Engineer.

(H) SOIL BORING ADVANCEMENT

(1) Prior to installation of each recovery well, a soil boring will be advanced in each location 10 feet deeper than the deepest known depth of NAPL as directed by the Engineer, typically to an elevation of -46 (North American Vertical Datum of 1988), which is no more than 70 feet below final design grade. Based on the observations from the Engineer of the subsurface NAPL contamination, the Engineer will prescribe the recovery well construction depth and the screen interval.

a. Soil borings will be advanced using a rotosonic drill rig to obtain high-quality core samples.

b. At each proposed recovery well location, continuous soil cores will be collected in 5-foot long, 4-inch diameter dedicated plastic bags/sleeves.

c. Soil cores will be inspected by the Engineer for evidence of contamination. The Engineer will also prepare a log of the subsurface geology observed in the soil cores.

(I) RECOVERY WELL INSTALLATION

(1) Recovery wells will be installed using a rotosonic drill rig and constructed as shown on the **Drawing RW0001-00 titled "Recovery Well Details and Notes"**.

(2) All recovery wells will be constructed of a 6-inch diameter solid stainless-steel riser, up to 20 feet 0.020-inch slotted stainless steel screen sections, and a 5-foot solid stainless-steel sump at the base within a 10-inch diameter borehole. The riser/screen pipe will be manufactured in strict compliance with ASTM A181/A181M.

(3) The annular space of the recovery wells will include:

a. 4-foot thick interval of bentonite grout at the base,

b. Followed by a filter pack constructed of No. 2 silica sand, which will be constructed to 1-foot above the top of the screen [the screen interval will be determined by the Engineer based on the soil boring observations referenced in **Subsection 4.25.10(H)**];Followed by a 2-foot thick layer of bentonite seal;

c. Followed by a layer of bentonite grout installed to 2 feet below the ground surface;

d. The remaining 2-foot space will be filled with a layer of concrete to the ground surface for construction of the concrete apron referenced in **Subsection 4.25.10(I)(5).**

(4) Each recovery well will be finished with a minimum 10-inch diameter flush-mount steel well box.

(5) Each flush-mount steel well box surrounded by a 3-foot square by 6-inch thick reinforced concrete apron.

(6) Each recovery well will be physically labeled with fixed identification tags in the field to facilitate future identification and monitoring of individual wells.

(7) Recovery wells located in grass lawns will have the concrete apron be painted green or dyed with green pigment in an effort to minimize disturbing the appearance of the grass lawn.

(8) Each recovery well flush-mount steel well box will be labeled with a black triangle with a white base and clearly labeling stating "Monitoring Well – Do Not Fill".

(J) WELL DEVELOPMENT

(1) Immediately following installation, each recovery well will be developed via pumping and surging to remove any accumulated fines and establish a hydraulic connection with the surrounding aquifer.

(2) Well development will be conducted by the Contractor using a submersible pump.

(3) The pump will be used to surge the well during development. If necessary, clean water can be introduced to the well at the screened interval for the first 10 minutes of development. Following completion of development, purged water will be containerized in 55-gallon drums for off-site disposal.

(4) The Engineer will observe development efforts and will field screen purged water every 5 minutes using a photoionization detector and turbidity meter. Well development will be terminated after turbidity readings remain below 50 nephthelometric units (NTU) for three consecutive readings. In the event that turbidity readings do not decrease below 50 NTU, well development will be terminated after 45 minutes of surging and development. In the event that limited water column recharge is noted, the well will be allowed to recharge and will be pumped dry three times prior to termination of the well development efforts.

(5) If NAPL is observed from the purge water, turbidity readings would be terminated, and the recovery well will be pumped till NAPL is no longer recoverable, as determined by the Engineer.

(J) SURVEYING OF RECOVERY WELLS

(1) Within 30 days after installation, the Contractor will have each recovery well surveyed for the horizontal and vertical locations. The vertical locations will include elevations for top of riser casing, ground surface, and manhole to an accuracy of 0.01 feet.

(K) DISPOSAL OF INVESTIGATION DERIVED WASTE

(1) The management drill cuttings and fluids will be performed in accordance with **Section 8.01**.

(2) The wastes generated by drilling activities will be containerized in DOT-approved, 55-gallon drums with all appropriate labels and maintained in a designated drum staging area determined by the Engineer, segregated as groundwater and soil, where MGP contaminated soil and groundwater are further segregated (as determined by the Engineer) to the extent feasible. DOT-approved 55-gallon drums will be contained within a locking spill containment pallet or secured in another manner approved by the Engineer.

(3) Disposable sampling equipment, including, spoons, gloves, bags, paper towels, etc., that have come in contact with contaminated environmental media will be double-bagged and disposed as municipal trash in a facility trash dumpster as non-hazardous trash.

(4) Decontamination fluids will be containerized in properly labeled DOT-approved 55-gallon drums for future off-site disposal at a permitted facility. Fluids that contain sheens and NAPL will be containerized separately, as determined by the Engineer.

(5) The Contractor will perform any required waste classification sampling and analysis of the removed materials.

(6) Other debris (i.e. concrete, asphalt) will be stockpiled as directed by the Engineer.

(L) SITE RESTORATION

(1) The Contractor will provide all labor, material, and equipment to perform all drilling operations, backfilling boreholes and surface restoration.

(2) The Contractor will be responsible for maintaining any utilities encountered during drilling operations. Damages to any utilities caused by the work performed under this section will be repaired by the Contractor at no expense to The City.

(3) All work will be completed at-grade with concrete patching and permanent structures (e.g., wells with protective manholes) sealed in place with concrete.

(4) In the event that subsurface work at any given drilling location must be resumed during a subsequent work shift, the Contractor will temporarily cover the subsurface penetration in a manner that eliminates tripping hazards and also cordon off the area to eliminate all other safety hazards.

(M) WARRANTY OF RECOVERY WELLS

(1) The Contractor is responsible to perform any necessary repairs as determined by the Engineer to the recovery wells for a period of 2 years following the installation of the recovery well. The repairs may consist of, but not limited to, re-padding the recovery well, decommissioning failed/collapsed recovery wells and installing a replacement recovery well, and redevelopment of poorly performing wells.

(N) METHOD OF MEASUREMENT

(1) Quantities of recovery wells will be measured as fully completed recovery wells in accordance with this section.

(2) Quantities of investigation derived waste, as per Subsection 4.25.10 L, will be measure in 55-gallon drums and determined by finalized disposal manifests from the receiving facility.

(O) PRICE TO COVER

(1) The unit bid price bid per quantity for Item ESCR-4.25 RW60 will include the cost of furnishing all labor, materials, equipment, plan, insurance, fees, permits, any other incidentals necessary to complete all the work as specified herein for the installation of recovery wells to a depth of 60 feet below grade.

(2) The unit bid price per foot for Item ESCR-4.25 PFT60 will include the incremental cost of furnishing all labor, materials, equipment, plan, insurance, fees, permits, any other incidentals by foot for recovery well installation beyond the depth of 60 feet below grade until the terminal construction depth of the recovery well.

(3) The unit bid price per 55-gallon drum for Item ESCR-4.25 IDW will include the costs for handling, transportation, disposal, documentation, fees, permits, loading, hauling, and any other incidentals necessary to complete all the work as specified herein for handling, transporting, and disposal of investigation derived wastes.

(4) The unit bid price per 55-gallon drum for Item ESCR-4.25 MGP will include the costs for handling, transportation, disposal, documentation, fees, permits, loading, hauling, and any other incidentals necessary to complete all the work as specified herein for handling, transporting, and disposal of MGP-contaminated investigation derived wastes.

(5) The unit bid price per 55-gallon drum for Item ESCR- 4.25 HAZ will include the costs for handling, transportation, disposal, documentation, fees, permits, loading, hauling, and any other incidentals necessary to complete all the work as specified herein for handling, transporting, and disposal of hazardous investigation derived wastes.

Payment will be made under:

Item No.	Item	Pay Unit
ESCR-4.25 RW60	RECOVERY WELL INSTALLED TO 60 FEET BELOW GRADE	EACH
ESCR-4.25 PFT60	ADD/DEDUCT PRICE FOR ADDITIONAL/REDUCED RECOVERY WELL FOOT (BEYOND/LESS THAN THE BASE RECOVERY WELL UNDER ESCR 4.25 RW60)	FOOT
ESCR-4.25 IDW	INVESTIGATION DERIVED WASTE (NON-HAZARDOUS)	DRUMS
ESCR-4.25 MGP	MGP-CONTAMINATED INVESTIGATION DERIVED WASTE (NON-HAZARDOUS)	DRUMS
SCR-4.25 HAZ	HAZARDOUS INVESTIGATION DERIVED WASTE	DRUMS

SECTION ESCR 8.01 HANDLING, TRANSPORTING, AND DISPOSAL OF POTENTIAL AND IDENTIFIED CONTAMINATED AND HAZARDOUS MATERIALS

8.01.1. DESCRIPTION. This Section provides common references and requirements for **Sections 8.01 C1**, **8.01 C2**, **8.01H**, **8.01S**, **8.01W1**, and **8.01 W2**.

8.01.2. MATERIALS. None.

8.01.3. METHODS.

(A) Current New York City Department of Environmental Protection (NYCDEP) Limitations for Discharge to Sewer provided below. The Contractor is responsible to adhere to any updates to the NYCDEP Limitations for Discharge to Sewer.

NYCDEP Bureau of Wastewater Treatment – Limitations for Effluent to Sanitary or Combined Sewers

Parameter[1]	Daily Limit	Units	Sample Type	Monthly Limit
Non-polar material[2]	50	mg/l	Instantaneous	---
pH	5-11	SU's	Instantaneous	---
Temperature	< 150	Degree F	Instantaneous	---
Flash Point	> 140	Degree F	Instantaneous	---
Cadmium	2 0.69	mg/l mg/l	Instantaneous Composite	--- ---
Chromium (VI)	5	mg/l	Instantaneous	---
Copper	5	mg/l	Instantaneous	---
Lead	2	mg/l	Instantaneous	---
Mercury	0.05	mg/l	Instantaneous	---
Nickel	3	mg/l	Instantaneous	---
Zinc	5	mg/l	Instantaneous	---
Benzene	134	ppb	Instantaneous	57
Carbontetrachloride	---	---	Composite	---
Chloroform	---	---	Composite	---
1,4 Dichlorobenzene	---	---	Composite	---
Ethylbenzene	380	ppb	Instantaneous	142
MTBE (Methyl-Tert-Butyl-Ether)	50	ppb	Instantaneous	---
Naphthalene	47	ppb	Composite	19
Phenol	---	---	Composite	---
Tetrachloroethylene (Perc)	20	ppb	Instantaneous	---
Toluene	74	ppb	Instantaneous	28
1,2,4 Trichlorobenzene	---	---	Composite	---
1,1,1 Trichloroethane	---	---	Composite	---
Xylenes (Total)	74	ppb	Instantaneous	28
PCB's (Total)[3]	1	ppb	Composite	---
Total Suspended Solids (TSS)	350[4]	mg/l	Instantaneous	---
CBOD[5]	---	---	Composite	---
Chloride[5]	---	---	Instantaneous	---
Total Nitrogen[5]	---	---	Composite	---
Total Solids[5]	---	---	Instantaneous	---

Notes for table above:

1 All handling and preservation of collected samples and laboratory analyses of samples must be performed in accordance with 40 C.F.R. pt. 136. If 40 C.F.R. pt. 136 does not cover the pollutant in question, the handling, preservation, and analysis must be performed in accordance with the latest edition of "Standard Methods for the Examination of Water and Wastewater." All analyses must be performed using a detection level less than the lowest applicable regulatory discharge limit. If a parameter does not have a limit, then the detection level is defined as the least of the Practical Quantitation Limits identified in NYSDEC's Analytical Detectability and Quantitation Guidelines for Selected Environmental Parameters, December 1988

2 Analysis for ***non-polar materials*** must be done by USEPA method 1664 Rev. A. Non-Polar Material will mean that portion of the oil and grease that is not eliminated from a solution containing N–Hexane, or any other extraction solvent the USEPA will prescribe, by silica gel absorption.

3 Analysis for PCBs is required if ***both*** conditions listed below are met:
1) if proposed discharge ≥ 10,000 gpd;
2) if duration of a discharge > 10 days.
Analysis for PCBs must be done by USEPA method 608 with MDL=<65 ppt. PCB's (total) is the sum of PCB-1242 (Arochlor 1242), PCB-1254 (Arochlor 1254), PCB-1221 (Arochlor 1221), PCB-1232 (Arochlor 1232), PCB-1248 (Arochlor 1248), PCB-1260 (Arochlor 1260) and PCB-1016 (Arochlor 1016).

4 For discharge ≥ 10,000 gpd, the TSS limit is 350 mg/l. For discharge < 10,000 gpd, the limit is determined on a case by case basis.

5 Analysis for Carbonaceous Biochemical Oxygen Demand (CBOD), Chloride, Total Solids and Total Nitrogen are required if proposed discharge ≥ 10,000 gpd.

(B) Applicable Regulations

Applicable regulations include, but are not limited to:

1. 49 CFR 100 to 179 - DOT Hazardous Materials Transport and Manifest System Requirements
2. 6 NYCRR 375-6 - NYSDEC Remedial Program Soil Cleanup Objectives
3. 6 NYCRR 360-1 NYSDEC Solid Waste Management Facilities
4. 6 NYCRR 364- Waste Transporter permits
5. Local restrictions on transportation of waste/debris
6. 40 CFR 260 to 272 - Hazardous Waste Management (RCRA)
7. 6 NYCRR 371 - Identification and Listing of Hazardous Wastes
8. 6 NYCRR 372 - Hazardous Waste Manifest System and Related Standards for Generators, Transporters and Facilities
9. 6 NYCRR 373-1 - Hazardous Waste Treatment, Storage and Disposal Facility Permitting Requirements
10. 6 NYCRR 376 - Land Disposal Restrictions
11. Posted weight limitations on roads or bridges
12. Transportation Skills Programs, Inc. 1985 - Hazardous Materials and Waste Shipping Papers and Manifests
13. Other local restrictions on transportation of waste/debris
14. Occupational Safety and Health Administration (OSHA), Standards and Regulations, 29 CFR 1910 (General Industry)

15. OSHA 29 CFR 1910.120 Hazardous Waste Operations and Emergency Response
16. OSHA Safety and Health Standards 29 CFR 1926 (Construction Industry)
17. OSHA 29 CFR 1910.146 Confined Space Entry Standard
18. Standard Operating Safety Guidelines, USEPA Office of Emergency and Remedial Response Publication, 9285.1-03
19. NIOSH / OSHA / USCG / USEPA Occupational Safety and Health Guidance Manual for Hazardous Waste Site Activities (1986)
20. U.S. Department of Health and Human Services (DHHS) "NIOSH Sampling and Analytical Methods," DHHS (NIOSH) Publication 84-100
21. ANSI, Practice for Respiratory Protection, Z88.2 (1980)
22. ANSI, Emergency Eyewash and Shower Equipment, Z41.1 (1983)
23. ANSI, Protective Footwear, Z358.1 (1981)
24. ANSI, Physical Qualifications for Respirator Use, Z88.6 (1984)
25. ANSI, Practice for Occupational and Educational Eye and Face Protection, Z87.1 (1968)
26. Water Pollution Control Federation "Manual of Practice No. 1, Safety in Wastewater Works"
27. NFPA No. 327 "Standard Procedures for Cleaning and Safeguarding Small Tanks and Containers"
28. Occupational Safety and Health Act Confined Space Entry Standard 29 CFR 1910.146.87
29. Department of Transportation 49 CFR 100 through 179
30. Department of Transportation 49 CFR 387 (46 FR 30974, 47073)
31. Environmental Protection Agency 40 CFR 136 (41 FR 52779)
32. Environmental Protection Agency 40 CFR 262 and 761
33. Resource Conservation and Recovery Act (RCRA)
34. Any transporter of hazardous or non-hazardous materials must be licensed in the State of New York and all other states traversed in accordance with all applicable regulations.

(C) Definitions

Contaminated Groundwater and Decontamination Fluids: Groundwater within the excavation trench or decontamination water that contains regulated compounds above the NYCDEP Discharge to Sewer Effluent limits.

Disposal or Treatment Facility: A facility licensed to accept either non-hazardous regulated waste or hazardous waste for either treatment or disposal.

Exclusion Zone: Work area that will be limited to access by Contractor personnel specifically trained to enter the work area only. The exclusion zone will be set up to secure the area from the public and untrained personnel. The project health and safety program will apply to all construction personnel including persons entering the work area.

Hazard Assessment: An assessment of any physical hazards that may be encountered on a work site.

Hazardous Soils: Soils that exhibit any of the characteristics of a hazardous waste, namely ignitability, corrosivity, reactivity, and toxicity, as defined in 6 NYCRR Part 371, Section 371.3 and 40 CFR Section 261.

Hazardous Substance Evaluation: An evaluation of the possible or known presence of any hazardous substances that may be encountered on a job site. This evaluation is included in the Health and Safety Plan and will include the identification and description of any hazardous substances expected to be encountered. Material Safety Data Sheets (MSDS) will be included for each substance.

Health and Safety Plan: A plan employed at a work site that describes all the measures that will be taken to assure that all work is conducted in a safe manner, and that the health of the workers and the public will be insured.

Material Handling Plan: A plan outlining the methods that will be employed to handle, transport and dispose of contaminated materials.

Manufactured Gas Plant Contaminated Soils: Soils producing higher than background responses on a photoionization detector, creosote-like odor, visual impacts (e.g., staining or discoloration), proximity to known releases from historic Manufactured Gas Plant facilities, and exceed the soil cleanup levels for naphthalene and other volatile organic compounds (VOCs) and semivolatile organic compounds (SVOCs) exceeding 6 NYCRR Part 375 NYSDEC SCOs.

MGP Mitigation Work Plan: A plan approved by NYSDEC, which includes a system of recovery wells and procedures to minimize the migration of Manufactured Gas Plant-related wastes during and after construction.

Non-Hazardous Contaminated Soils: Soils which exhibit a distinct chemical or petroleum odor, or exhibit elevated photoionization detector readings but are not classified as hazardous waste under 6 NYCRR Part 371, Section 371.3 and 40 CFR Section 261.

New York State Health Department's Environmental Laboratory Approval Program: A program by which the state of New York approves and accredits environmental testing laboratories.

PCBs: Polychlorinated biphenyls are a group of toxic compounds commonly used as a coolant in transformers and other electrical components.

Photoionization Detector: A hand held instrument used to measure volatile organic compounds in air. The instrument ionizes the organic molecules through the use of an ultraviolet lamp.

RCRA Hazardous Waste Characteristics: Characteristics of a material which may indicate the material is hazardous. These include: ignitability corrosivity, reactivity, and toxicity.

Remedial Action Plan: A plan approved by NYCDEP outlining procedures for managing soil and groundwater during subsurface disturbance and includes guidelines for the import and export of soil/fill materials.

Total Petroleum Hydrocarbons: An analytical procedure used to determine the total amount of petroleum compounds in a material.

Waste Management Plan for MGP-Related Contamination: A plan approved by NYSDEC specifically addressing the management and handling of soil and groundwater impacted by Manufactured Gas Plant-related wastes.

(D) Phase I and Phase II Investigation Reports

1. East Side Coastal Resiliency Project Area One: Subsurface Exploration Report - Borough of Manhattan, New York, prepared by AKRF under the Hazen and Sawyer / AKRF-JV, October 2015, 8,555 Pages.

2. East Side Coastal Resiliency Project Area Two: Subsurface Exploration Report - Borough of Manhattan, New York, prepared by AKRF under the Hazen and Sawyer / AKRF-JV, October 2015, 3,145 Pages.

3. East Side Coastal Resiliency: Supplemental Subsurface Investigation Report - Borough of Manhattan, New York, prepared by AKRF under the Hazen and Sawyer / AKRF-JV, November 2016, 12,342 Pages.

4. East Side Coastal Resiliency, Parallel Conveyance & Isolation Gates: Environmental Subsurface Investigation Report - Borough of Manhattan, New York, prepared by AKRF under the AKRF-KSE JV, January 2019, 2,221 Pages.

5. East Side Coastal Resiliency: Supplemental Subsurface Investigation Report - Borough of Manhattan, New York, prepared by AKRF under the Hazen and Sawyer / AKRF-JV, August 2019, 2,161 pages.

8.01.4. MEASUREMENT AND PAYMENT. No separate payment will be made for complying with the requirements of this Section.

SECTION ESCR 8.01 C1 – HANDLING, TRANSPORTATION, AND DISPOSAL OF NON-HAZARDOUS CONTAMINATED SOIL

8.01 C1.1. WORK TO INCLUDE

(A) General

This work will consist of the handling, transportation, and disposal of contaminated soils. The materials covered by this specification are soils that are contaminated with petroleum, manufactured gas plant (MGP) wastes, or chemical products but cannot be classified as hazardous waste. For the purpose of this specification, soil will be defined as any material excavated below the pavement (concrete and/or asphalt) and pavement base (concrete and/or asphalt).

Soil to be excavated can be classified as non-contaminated, contaminated, or hazardous soil. Non-contaminated soils are defined as soils not exhibiting any of the following characteristics.

- Exceedances of New York State Department of Environmental Conservation (NYSDEC) Part 375-6 Restricted Commercial Soil Cleanup Objectives (SCOs) for street work, Restricted Residential SCOs for work areas in parkland, or Residential SCOs for housing projects.
- Elevated Photo-Ionization Detector (PID) readings, subsequently confirmed by laboratory analysis and showed exceedances of applicable SCOs.
- Visual evidence of contamination, such as the presence of staining, discoloration.
- Petroleum, MGP waste, and/or chemical odors, subsequently confirmed by laboratory analysis and showed exceedances of applicable SCOs.
- Physical evidence of coal ash, municipal solid waste, construction and demolition debris, or dredged spoils.

Contaminated soils are defined as soils exhibiting one or more of the above characteristics. Contaminated soils must be handled, transported, and disposed of in accordance with the specifications for **Section 8.01**.

Hazardous soils are defined as soils showing exceedances of Toxicity Characteristic Leaching Procedure (TCLP) or ignitability, corrosivity, or reactivity Regulatory Levels for Hazardous Waste published in Resource Conservation and Recovery Act (RCRA), 6 New York Codes, Rules, and Regulations (NYCRR) Part 371, or 40 Code of Federal Regulations (CFR) Section 261. Hazardous soils must be handled, transported, and disposed of in accordance with the specifications of this section.

This entire specification 8.01 covers the handling, transportation, and disposal of contaminated soils and hazardous soils only. Non-contaminated soil can be reused at the project site with prior approval by the Engineer, provided it meets other contract requirements. Soil reused on-site must be (1) below a structure; (2) beneath a roadbed or other paved area; or (3) in any unpaved areas, either beneath the soil cap. Soil reused for the soil cap must meet the criteria for fill and backfill as required in ESCR 4.11 - Excavation and Filling and the RAP. Excess non-contaminated soil becomes the property of the Contractor.

The Contractor must ensure that all operations associated with the handling, sampling, loading, transportation, and disposal of contaminated soils are in compliance with all applicable Federal, State, and City statutes and regulations.

The Contractor must supply all equipment, material and labor required to conduct the specified work of this Section. The Contractor must document the excavation, handling, transportation and disposal of contaminated soils.

(B) Request for Approval of Subcontractors

A subcontractor/subconsultant, such as the independent Environmental Consultant and the waste hauler, is not permitted to start work until approved by the Engineer. If the Contractor performs work using a subcontractor/subconsultant prior to approval, the Contractor will not be paid for the work performed by that subcontractor/subconsultant and the Contractor may be subject to sanctions including, but not limited to, initiation of default proceedings.

The Contractor must submit a completed original Request for Approval of Subcontractors (RFAS) form and all required documents, such as legal identity, project reference list, Corporate Health and Safety Plan (HASP), waste transporter permits, Occupational Safety and Health Administration (OSHA) 10 certification, Hazardous Waste and Emergency Response (HAZWOPER) certification, etc., to the Engineer at least 30 days prior to the scheduled subcontract work start date. The Engineer must then submit the original RFAS to DDC Safety and Site Support, Office of Environmental and Geotechnical Services (OEGS) for review and approval. If the RFAS is denied by OEGS, OEGS will issue the final denial and return the original RFAS to the Engineer. If the RFAS is approved by OEGS, OEGS will forward the original RFAS package and an approval memo to the DDC ACCO for further review and approval. The ACCO's Vendor Integrity Unit and Office of Contract Opportunity (OCO) will review the subcontractor/subconsultant's overall business integrity and compliance with Vendor Exchange System (VENDEX), Executive Order 50, Local Law 1, and Minority- and Women-Owned Business Enterprise/ Disadvantaged Business Enterprise (MWBE/DBE) participation as per the contract. ACCO will issue the final Approval or Denial. The original RFAS will be returned to the Engineer, who will subsequently notify and return the original RFAS to the Contractor.

(C) Independent Environmental Consultant

The Contractor must retain an independent Environmental Consultant to obtain all permits, prepare the plans required in the specification 8.01, and perform, sampling, and other health and safety services. The independent Environmental Consultant must be approved under the RFAS process and must demonstrate the minimum requirements as set forth below:

1. The independent Environmental Consultant project supervisor on site and other designated key personnel must have a minimum of three (3) years of experience in the environmental field dealing with issues associated with contaminated soils, specifically volatile organic compounds and MGP-related contamination.
2. The independent Environmental Consultant must be experienced in work of similar nature, size, and complexity and must have previous experience in working with DDC.
3. The independent Environmental Consultant must furnish a project listing identifying the location, nature of services provided, owner, owner's contact, contact's working telephone number, project duration and value for at least five (5) projects within the last 3 years.

(D) Sampling and Analysis

Prior to the performance of soil sampling, the Contractor will submit a Field Sampling Plan (FSP). Soil sampling must not be conducted until OEGS has approved the FSP. The Contractor must conduct sampling and analysis of the impacted soils as specified under **Section 8.01 C2**. The laboratory results must be forwarded to OEGS for review to determine if the soils would be handled and disposed of as contaminated soils or hazardous soils.

(E) Material Handling Plan

At least 45 days prior to the commencement of work, the Contractor must submit to the OEGS for review a Material Handling Plan (MHP). The MHP must be approved by the OEGS prior to the Contractor beginning any soil excavation work. The MHP must, at a minimum, consist of:

1. The Contractor's procedures for safely handling contaminated soils. The procedures must include personnel safety and health as well as environmental protection considerations.
2. For the proposed laboratory for analysis of representative soil samples, provide the following: (a) name, (b) address, (c) telephone number, and (d) New York State Department of Health's (NYSDOH) Environmental Laboratories Accreditation Program (ELAP) status.
3. Identification of the Contractor's proposed waste transporter(s) (hauler). This information must include:
    1. Name and Waste Transporter Permit Number
    2. Address
    3. Name of responsible contact for the waste transporter
    4. Telephone number for the contact
    5. All necessary permit authorizations for each type of waste transported
    6. Previous experience in performing the type of work specified herein
4. The name and location of the facility where an off-site scale is located. The Contractor must outline the procedures on controlling trucks leaving the work site and en-route to the off-site scale.
5. All staging/stockpiling areas (if stockpiling areas are intended and available), or alternate procedures that will be used. Alternate procedures may include, but are not limited to, agreements from the intended disposal facilities to accept boring data and/or analytical data previously obtained during the site characterization so that materials may be directly loaded into vehicles for shipment to the disposal facility.
6. A backup facility must be provided, should the staging/stockpile areas become unavailable, insufficient in area or presented by some other unforeseen difficulty.
7. Identification of the Contractor's two proposed Treatment Storage or Disposal (TSD) facilities for contaminated soils (primary and back-up) for final disposal of the soils. Both primary and backup TSD facilities must be currently state-licensed disposal facilities approved to receive contaminated soil. The information required for each facility must include:
    a. General Information
        1. Facility name and the State identification number
        2. Facility location
        3. Name of responsible contact for the facility
        4. Telephone number for contact
        5. Signed letter of agreement to accept waste as specified in this contract. The letter must indicate agreement to handle and accept the specified estimated quantities and types of material during the time period specified in the project schedule and any time extension as deemed necessary.
        6. Unit of measure utilized at disposal facility for costing purposes
    b. A listing of all permits, licenses, letters of approval, and other authorizations to operate, which are currently held and valid for the proposed facility.
    c. A listing of all permits, licenses, letters of approval, and other authorizations to operate which have been applied for by the proposed facility but not yet granted or issued.
    d. The Contractor must specify and describe the disposal/containment unit(s) that the proposed facility will use to manage the waste. The Contractor must identify the capacity available in the units and the capacity reserved for the subject waste.

e. The Contractor must provide the date of the proposed facility's last compliance inspection.
f. A list of all active (unresolved) compliance orders (or agreements), enforcement notices, or notices of violations issued to the proposed facility must be provided. The source and nature of the cause of violation must be stated, if known.

8. Description of all sampling and field/laboratory analyses that will be needed to obtain disposal facility approval.

8.01 C1.2. MATERIALS

(A) The Contractor must provide containers as specified in the United States Department of Transportation (USDOT) regulations.

(B) The Contractor must provide polyethylene sheeting, which is to be placed under (20 mil. thickness minimum) and over (10 mil. thickness minimum) soil piles.

(C) The Contractor must provide Portland cement as a soil amendment to stabilize wet soil that is determined by the Engineer to be impacted by MGP wastes prior to shipping for off-site disposal.

(D) The Contractor must assure that the waste transporter's appropriate choice of vehicles and operating practices are fitted to prevent spillage or leakage of contaminated material during transportation.

(E) The Contractor must provide, install, and maintain any temporary stockpiling or loading facilities on site as required until completion of material handling activities. The location and design of any such facilities must be included in the MHP.

8.01 C1.3. CONSTRUCTION DETAILS

(A) Material Handling

1. Immediately after excavation of non-hazardous contaminated soil the Contractor must:

a. Stabilize wet soil determined by the Engineer to be impacted with MGP wastes with Portland cement as a soil amendment prior to soil waste disposal. The Contractor is responsible for determining the appropriate percent of Portland cement required to stabilize the soil. It is anticipated that stabilization will require a minimum of 5% Portland cement. Dosage of Portland cement shall be no greater than 25% by wet weight;

b. Load material directly onto trucks/tankers/roll offs for disposal off site; or

c. If interim stockpiling is required, place contaminated soil on a minimum of 20 mil. polyethylene sheeting and cover it securely by minimum of 10 mil. polyethylene sheeting to protect against cross contamination, airborne dust, leaching or runoff of contaminants into the subsurface, groundwater, or stormwater. Weight or secure the sheeting by appropriate means and seal seams as approved by the DDC to prevent tearing or removal by wind or weather. Grade surrounding surface to provide for positive drainage away from pile. Each stockpile must not exceed 500 cubic yards unless otherwise approved by the Engineer. Contaminated soils must be stockpiled separately from uncontaminated and hazardous soil at an off-site location approved by DDC or secured on-site by the Contractor, meeting all required Federal, State and Local stipulations. Stockpiles must be at least 800 feet away from any sensitive receptors, such as schools, daycare center, hospitals, nursing homes, etc., and at least 100 feet away from any water body, unless otherwise coordinated with the Engineer.

2. Institute appropriate procedures and security measures to ensure the protection of site personnel and the public from contaminated materials as described in the approved MHP, Site HASP, and **Section 8.01 S - Health and Safety**.
3. Petroleum contaminated, MGP contaminated, and non-hazardous soils must be segregated separately when stockpiling.
4. Any soil encountered that appears to contain unknown contaminants (based on visual, odor, or other observation), or that vary substantially from the material originally identified must be segregated in stockpiles and the Contractor's independent Environmental Consultant promptly notified to collect soil samples for analysis. Construct stockpiles to the same requirements as stated in subsection (A).(1).(b) above.
5. Provide any dewatering that is necessary to complete the work. Contaminated water must be disposed of in accordance with **Section 8.01 W1**.

(B) Off-Site Transportation to Disposal Facility

1. General
    a. The Contractor must furnish all labor, equipment, supplies and incidental costs required to transport contaminated material from the work area to the off-site disposal facility, and any other items and services required for transporting contaminated material for disposal at an off-site facility.
    b. The Contractor will be responsible for tracking all materials and vehicles from the site to the off-site scale.
    c. The Contractor must submit to the Engineer the certified tare and gross weight slips for each load received at the accepted facility which must be attached to each returned manifest. These documents must be maintained and kept with project field records.
    d. Contaminated soils must be delivered to the disposal or treatment facility within 30 calendar days after excavation.
    e. The Contractor must coordinate the schedule for truck arrival and material deliveries at the job site to meet the approved project schedule.
    f. The Contractor must inspect all vehicles leaving the project site to ensure that contaminated soils adhering to the wheels or undercarriage are removed prior to the vehicle leaving the site.
    g. The Contractor must obtain letters of commitment from the waste haulers and the TSD facility to haul and accept shipments.
    h. The Contractor must provide waste profile forms to OEGS for review and approval before transporting contaminated soil to the approved TSD facility.
2. Hauling
    a. The Contractor must coordinate manifesting, placarding of shipments, and vehicle decontamination. All quantities must be measured and recorded upon arrival at the disposal facility. If any deviation between the two (2) records occurs, the matter is to be reported immediately to the Engineer and to be resolved by the Contractor to the satisfaction of the Engineer.
    b. The Contractor will be held responsible, at its own cost for any and all actions necessary to remedy situations involving material spilled in transit or mud and dust tracked off-site.

c. The Contractor must ensure that trucks are protected against contamination by properly covering and lining them with polyethylene sheeting or by decontaminating them prior to and between acceptances of loads. Trucks with loaded contaminated soil must be covered securely with tarps before leaving the project site to prevent generation of airborne dust during hauling. When loading soil determined by the Engineer to be impacted by MGP wastes, the Contractor must use impermeable, tight fitting truck covers. The Contractor must install and maintain a truck tracking pad to limit the amount of sediment that is transported from the site by vehicles. The truck tracking pad should be at least 24 feet wide and 50 feet long, and constructed of 3-6 inch washed stone with a depth of at least 12 inches. When working in areas determined to be impacted by MGP wastes by the Engineer, the truck tracking pad must additionally include liner(s) and a sump for decontaminating all vehicles leaving the site, and all decontamination fluids will be containerized for disposal.

d. The Contractor will be responsible for inspecting the access routes for road conditions, overhead clearance, and weight restrictions.

e. The Contractor must only use the transporter(s) identified in the approved MHP for the performance of work. A revised MHP or an addendum to the original approved MHP must be submitted to OEGS for review and approval at no additional cost to the City for any use of substitute or additional transporters.

f. The Contractor must develop, document, and implement a policy for accident prevention.

g. The Contractor must not combine contaminated materials from other projects with material from this project.

h. No material will be transported until approval by the Engineer is obtained.

3. Off-Site Disposal

a. The Contractor must use only the disposal facility(ies) identified in the approved MHP for the performance of the work. A revised MHP or an addendum to the original approved MHP must be submitted to OEGS for review and approval at no additional cost to the City for any use of substitutions or additions of disposal facility.

b. The Contractor must be responsible for acceptance of the materials at an approved facility, for ensuring that the facility is properly permitted to accept the stated materials, and for ensuring that the facility provides the stated treatment and/or disposal services.

c. The City reserves the right to contact and visit the TSD facility and regulatory agencies to verify the agreement to accept the stated materials and to verify any other information provided.

d. In the event that the identified and approved facility ceases to accept the stated materials or the facility ceases operations, it is the Contractor’s responsibility to locate an alternate approved and permitted facility(ies) for accepting materials. The alternate facility(ies) must be approved in writing by the Engineer in the same manner and with the same requirements as for the original facility(ies). This must be done at no extra cost or delay to the City.

e. The Contractor must obtain manifest forms and complete the shipment manifest records required by the appropriate regulatory agencies for verifying the material and quantity of each load in unit of volume and weight. Copies of each manifest must be submitted to the Engineer within four (4) business days following shipment, and within three (3) business days after notification of receipt of the facility. The signed manifests

must be maintained and kept with the project field records. Any manifest discrepancies must be reported immediately to the Engineer and be resolved by the Contractor to the satisfaction of the Engineer.

4. Equipment and Vehicle Decontamination

   a. The Contractor must design and construct a portable decontamination station to be used to decontaminate equipment and vehicles that have been used to handle contaminated soil. The cost for this work will be paid under Item ESCR-8.01 S.

   b. Water generated during the decontamination process must be disposed of in accordance with **Section 8.01 W1**.

8.01 C1.4 METHOD OF MEASUREMENT

Quantities for contaminated soils will be measured in tons. The tonnage will be determined by off-site truck scales, as per Subsection 8.01 C1.(3).(B).(1), that are capable of generating load tickets.

8.01 C1.5 PRICE TO COVER

(A) The unit bid price per ton for Item ESCR-8.01 C1 must include the cost of furnishing all labor, materials, equipment, plan, and insurance for excavation, handling, transportation, disposal, documentation, fees, permits, loading, stockpiling, hauling, and any other incidentals necessary to complete all the work as specified herein for handling, transporting, and disposal of non-hazardous contaminated soil.

(B) Final disposal of hazardous soil will be paid for under Item ESCR-8.01 H – Handling, Transporting and Disposal of Hazardous Soils. Disposal of decontamination water will be paid for under Item ESCR-8.01 W1 – Removal, Treatment and Discharge/Disposal of Contaminated Water.

(C) Backfill will be paid for under its respective item as specified in the contract document.

(D) The independent Environmental Consultant will be paid under Item ESCR-8.01 S – Health and Safety.

Payment will be made under:

Item No.	Description	Pay Unit
ESCR 8.01 C1	HANDLING, TRANSPORTING, AND DISPOSAL OF NON-HAZARDOUS CONTAMINATED SOIL	TONS
ESCR 8.01 C1MGP	HANDLING, TRANSPORTING, AND DISPOSAL OF NON-HAZARDOUS MGP CONTAMINATED SOIL	TONS

SECTION ESCR 8.01 C2 – IN-SITU AND EX-SITU SOIL SAMPLING AND ANALYSIS FOR WASTE DISPOSAL PARAMETERS

8.01 C2.1 WORK TO INCLUDE

(A) Description

The work will consist of collecting and analyzing representative samples of soil to be excavated in-situ and/or ex-situ from stockpiles for parameters typically requested by the disposal facilities to determine if the soil to be excavated is suitable for reuse, or to be hauled off-site for disposal purposes as contaminated and/or hazardous soil.

(B) Sampling and Laboratory Analysis

1. At least forty-five (45) days prior to the commencement of work, the Contractor's independent Environmental Consultant must submit an FSP and an Investigation Health and Safety Plan (Investigation HASP) to OEGS for review and approval, prior to conducting the field sampling. The FSP must include, at a minimum, the following information:

   a. Project information
   b. Description of sample collection methodology for soil to be excavated and soil which appears to contain unknown contaminants based on field observation
   c. Type of analyses
   d. Sample preservation and handling
   e. Training and experience of the personnel who will collect the samples
   f. Equipment Decontamination
   g. Analytical laboratory's name, address, New York State Department of Health's ELAP certification number, and telephone number
   h. Map of the project area
   i. Sample location plan
   j. Chain of Custody

   The Investigation HASP must identify actual and potential hazards associated with planned sampling field activities and stipulate appropriate health and safety procedures, so as to minimize field personnel exposures to physical, biological, and chemical hazards that may be present in the sampling media. The Investigation HASP must include, at a minimum, the following information:

   a. Project information
   b. Description of work to be performed
   c. Names of responsible health and safety personnel
   d. Worker training
   e. Job hazard analysis
   f. Confined Space Entry Plan (if applicable)
   g. Personal monitoring (if applicable)
   i. Personnel Protection Equipment (PPE)
   j. Decontamination
   k. Safety rules
   l. Spill prevention and control, dust control, vapor/odor suppression procedures
   m. Identification of nearest hospital and route
   n. Emergency Incident Reporting

2. The Contractor's Environmental Consultant must collect one (1) grab and one (1) composite sample per 500 cubic yards of soil to be excavated in-situ and/or ex-situ from

stockpiles. Sample locations must be placed throughout along the project area. For in-situ sampling, each grab soil sample must be collected from either the 6-inch interval above the water table (when encountered) or the 6-inch interval above the bottom of the proposed excavation depth (where recovery allowed), or from the 6-inch interval showing the highest potential for contamination based on field observation. For composite soil sampling, grid sampling must be performed for projects with excavation depth deeper than six (6) feet below grade. Each composite sample must consist of five (5) grab samples collected from various intervals along the depth of excavation at each sampling location. For stockpiled soils, each composite sample must consist of five (5) grab samples collected from various depths within each soil stockpile, at least two feet below the soil surface. For drummed soil, one (1) composite sample per 10 drums must be collected. Each composite soil sample must consist of one (1) grab sample from each of the 10 drums.

3. The quality of the data from the sampling program is the Contractor's responsibility. The Contractor must furnish all qualified personnel, materials, equipment and instruments necessary to carry out the sampling. Unless directed otherwise, all sampling procedures must follow the NYSDEC sampling guidelines and protocols. All sampling must be conducted by a qualified person trained in sampling protocols using standard accepted practices for obtaining representative samples.
4. Each grab and composite sample must be analyzed for all parameters required by disposal facilities accepting contaminated and hazardous soil.
5. All sample containers must be marked and identified with legible sample labels, which must indicate the project name, sample location and/or container, the sample number, the date and time of sampling, preservatives utilized and other information that may be useful in determining the character of the sample. Chain-of-custody must be tracked from laboratory issuance of sample containers through laboratory receipt of the samples.
6. The Contractor must maintain a bound sample logbook. The Contractor must provide the Engineer access to it at all times and must turn it over to the Engineer in good condition at the completion of the work. The following information, at a minimum, must be recorded to the log:
    a. Sample identification number
    b. Sample location
    c. Field observation
    d. Sample type
    e. Analyses
    f. Date/time of collection
    g. Collector's name
    h. Sample procedures and equipment utilized
    i. Date sent to laboratory and name of laboratory
7. The City reserves the right to direct the Contractor to conduct alternative sampling in lieu of the parameters described in subsection 8.01 C2(1)(B)(4), if the situation warrants. The substitute sampling parameters will be of equal or lesser monetary value than those described in subsection 8.01 C2(1)(B)(4), as determined by industry laboratory pricing standards.
8. Only dedicated sampling equipment may be used to collect these samples. All equipment involved in field sampling must be decontaminated before being brought to the sampling location and must be properly disposed of after use.

9. The Contractor's Environmental Consultant must prepare a Field Sampling Result Report (FSSR), tabulate the analytical results, and compare the data to the applicable NYSDEC Part 375.6 Soil Cleanup Objectives, and TCLP for Hazardous Waste published in RCRA and 6 NYCRR Part 371, or 40 CFR Section 261. If the soil is to be disposed of in a disposal facility outside of the State of New York, the soil sampling data must also be compared to the applicable regulatory criteria established by the state in which the disposal facility is located. The FSSR, with the tabulated tables and laboratory analytical data, must be submitted to OEGS for review and approval prior to any soil reuse or disposal activities.
10. Soils exceeding any of the hazardous characteristic criteria meet the legal definition of hazardous soils (rather than non-hazardous contaminated soils) and must be transported or disposed of under **Section 8.01 H**. All analyses must be done by a laboratory that has received approval from the ELAP for the methods to be used. The Contractor must specify the laboratory in the MHP.
11. The Contractor must contact the disposal facility where the waste will be sent for permanent disposal and arrange to collect any additional samples required by the facility. The cost associated with additional sampling and testing must be included in the bid price of this Item.

8.01 C2.2 METHOD OF MEASUREMENT

Quantities for samples must be measured as the number of sets of samples that are tested. A set will be defined as one (1) grab and one (1) composite samples per 500 cubic yards to be analyzed for the full range of parameters as specified in subsection 8.01 C2(1).(B).(4).

8.01 C2.3 PRICE TO COVER

The unit price bid per set for Item ESCR-8.01 C2 will include the cost of furnishing all labor, materials, equipment, plan, and insurance necessary for sampling, handling, transporting, testing, documentation, fees, permits, and any other incidentals necessary to complete the work as specified herein for in-situ and ex-situ soil sampling and analysis for waste disposal parameters.

Payment will be made under:

Item No.	Description	Pay Unit
ESCR 8.01 C2	SAMPLING AND TESTING OF CONTAMINATED/POTENTIALLY HAZARDOUS SOIL FOR DISPOSAL PURPOSES	SETS

SECTION ESCR 8.01 H – HANDLING, TRANSPORTATION, AND DISPOSAL OF HAZARDOUS SOILS

8.01 H.1 WORK TO INCLUDE

(A) General

This work will consist of the handling, transportation, and disposal of hazardous soils, which are defined as soils showing exceedances of TCLP for Hazardous Waste published in RCRA, 6 NYCRR Part 371, or 40 CFR Section 261. Hazardous soil can also be contaminated soils, as defined in **Section 8.01 C1**, but must be handled, transported, and disposed of as hazardous soil under **Section 8.01 H**, in accordance with the specifications herein. For the purpose of this specification, soils will be defined as any materials excavated below the pavement and base for pavement.

The Contractor must ensure that all operations associated with the handling, sampling, loading, transportation, and disposal of hazardous materials are in compliance with the applicable Federal, State, and Local statutes and regulations. The Contractor must supply all equipment, material and labor required to conduct the specified work under this section.

The Contractor must document the excavation, handling, sampling, and testing, transportation, and disposal of hazardous soils. The City must be listed in the disposal documents as the waste generator.

The Contractor must decontaminate all equipment prior to its removal from the exclusion zone and/or following contact with hazardous materials, as detailed in **Section 8.01 S**. Water generated during the decontamination process must be disposed of as detailed in **Section 8.01 W1**.

The Contractor must retain an independent Environmental Consultant, meeting the requirements specified in Section 8.01 C1. The independent Environmental Consultant must conduct sampling for laboratory analysis of soil to be excavated to determine whether the soil is contaminated and/or hazardous.

All work under this section must be performed under the direct supervision of the Contractor's Environmental Consultant, as approved by the OEGS.

(B) Material Handling Plan

At least 45 days prior to the commencement of work, the Contractor must submit to the OEGS for review a MHP. The MHP must be approved by the OEGS prior to the Contractor beginning any soil excavation work. The MHP must, at a minimum, consist of:

1. The Contractor's procedures for identifying hazardous soils during excavation, including the specific model and manufacturer of intended organic vapor monitoring equipment and calibration procedures to be used. It should also include the training and experience of the personnel who will operate the equipment.
2. The Contractor's procedures for safely handling hazardous soils or soils which have not yet been tested but are believed to be potentially hazardous. The procedures must include personnel safety and health as well as environmental protection considerations.
3. Name, address, NYSDOH ELAP status and telephone number of the proposed laboratory for analysis of representative soil samples.
4. Identification of the Contractor's proposed waste transporter(s). This information must include:

a. Name and Waste Transporter Permit Number
b. Address
c. Name of responsible contact for the waste transporter
d. Telephone number for the contact
e. All necessary permit authorizations for each type of waste transported
f. Previous experience in performing the type of work specified herein

5. The name and location of the facility where an off-site scale is located. The Contractor must outline the procedures on controlling trucks leaving the work site and en-route to the off-site scale.

6. All staging/stockpiling areas (if stockpiling areas are intended and available), or alternate procedures that will be used. Alternate procedures may include, but are not limited to, agreements from the intended disposal facilities to accept boring data and/or analytical data previously obtained during the site characterization so that materials may be directly loaded into vehicles for shipment to the disposal facility.

7. A backup facility must be provided, should the staging/stockpile areas become unavailable, insufficient in area or not be present by some other unforeseen difficulty.

8. Identification of the Contractor's two proposed Treatment Storage or Disposal (TSD) facilities for hazardous soils (primary and back-up) for final disposal of the hazardous soils. Both primary and backup TSD facilities must be currently USEPA or State-approved RCRA TSD facilities for hazardous soils. The information required for each facility must include:

   a. General Information
      1. Facility name and the USEPA identification number
      2. Facility location
      3. Name of responsible contact for the facility
      4. Telephone number for contact
      5. Signed letter of agreement to accept waste as specified in this contract. The letter must indicate agreement to handle and accept the specified estimated quantities and types of material during the time period specified in the project schedule and any time extension as deemed necessary.
      6. Unit of measure utilized at disposal facility for costing purposes
   b. A listing of all permits, licenses, letters of approval, and other authorizations to operate, which are currently held and valid for the proposed facility.
   c. A listing of all permits, licenses, letters of approval, and other authorizations to operate which have been applied for by the proposed facility but not yet granted or issued.
   d. The Contractor must specify and describe the disposal/containment unit(s) that the proposed facility will use to manage the waste. The Contractor must identify the capacity available in the units and the capacity reserved for the subject waste.
   e. The Contractor must provide the date of the proposed facility's last compliance inspection under RCRA.
   f. A list of all active (unresolved) compliance orders (or agreements), enforcement notices, or notices of violations issued to the proposed facility must be provided. The source and nature of the cause of violation must be stated, if known.

9. Description of all sampling and field/laboratory analyses that will be needed to obtain disposal facility approval.

8.01 H.2 MATERIALS

(A) The Contractor must provide containers as specified in the USDOT regulations.

(B) The Contractor must provide Portland cement as a soil amendment to stabilize wet soil that is determined by the Engineer to be impacted by MGP wastes prior to shipping the material for off-site disposal.

(C) The Contractor must provide polyethylene sheeting, which is to be placed under (20 mil. thickness minimum) and over (10 mil. thickness minimum) soil piles.

(D) The Contractor must assure that the waste transporter's appropriate choice of vehicles and operating practices are fitted to prevent spillage or leakage of contaminated material during transportation.

(E) The Contractor must provide, install, and maintain any temporary stockpiling or loading facilities on site as required until completion of material handling activities. The location and design of any such facilities must be included in the MHP.

8.01 H.3 CONSTRUCTION DETAILS

(A) Material Handling

1. Immediately after excavation of hazardous soil the Contractor must:

   a. Stabilize wet soil determined by the Engineer to be impacted with MGP wastes with a soil amendment prior to off-site disposal. The Contractor is responsible for determining the appropriate percent of Portland cement required to stabilize the soil. It is anticipated that stabilization will require a minimum of 5% Portland cement. Dosage of Portland cement shall be no greater than 25% by wet weight;

   b. Load material directly onto drums/trucks/tankers/roll offs for disposal off site. Containers must be labeled as hazardous soil while being held for disposal; or

   c. If interim stockpiling is required, place hazardous soil on a minimum of 20 mil. polyethylene sheeting and cover it securely by minimum of 10 mil. polyethylene sheeting to protect against cross contamination, airborne dust, leaching or runoff of contaminants into the subsurface, groundwater, or stormwater. Weight or secure the sheeting by appropriate means and seal seams as approved by the Engineer to prevent tearing or removal by wind or weather. Grade surrounding surface to provide for positive drainage away from pile. Each stockpile must not exceed 500 cubic yards unless otherwise approved by the Engineer. Hazardous soils must be stockpiled separately from uncontaminated and contaminated soil at an off-site location approved by the Engineer or secured on-site by the Contractor, meeting all required Federal, State and Local stipulations. Stockpiles must be labelled as hazardous soil and situated at least 800 feet away from any sensitive receptors, such as schools, daycare center, hospitals, nursing homes, etc., and at least 100 feet away from any water body, unless otherwise coordinated with the Engineer.

2. Institute appropriate procedures and security measures to ensure the protection of site personnel and the protection of the public from hazardous soils as described in the approved MHP, Site HASP, and **Section 8.01 S**.

3. Any soil encountered that appears to contain unknown contaminants (based on visual, odor, or other observation), or that vary substantially from the material originally identified must be segregated in stockpiles and the independent Environmental Consultant promptly notified to collect soil samples for analysis. Construct stockpiles to the same requirements as stated in subsection (A)(1)(b) above.

4. Provide any dewatering that is necessary to complete the work. Contaminated water must be disposed of in accordance with **Section 8.01 W1**.

(B) Off-Site Transportation to Disposal Facility

1. General

   a. The Contractor must furnish all labor, equipment, supplies and incidental costs required to transport contaminated material from the work area to the off-site disposal facility, and any other items and services required for transporting hazardous material for disposal at an off-site facility.

   b. The Contractor is responsible for obtaining the USEPA hazardous waste generator identification number for the City. The application must be submitted to OEGS for review and approval prior to submission to USEPA. The Contractor must prepare the annual hazardous waste report for the project and submit to the NYSDEC and USEPA.

   c. The Contractor will be responsible for tracking all material/vehicles from the site to the off-site scale and to the approved disposal facility.

   d. The Contractor must provide to the Engineer certified tare and gross weight slips for each load received at the accepted facility which must be attached to each returned manifest. These documents must be maintained and kept with project field records.

   e. Hazardous soils must be delivered to the disposal or treatment facility within 30 calendar days after excavation.

   f. The Contractor must coordinate the schedule for truck arrival and material deliveries at the job site to meet the approved project schedule.

   g. The Contractor must inspect all vehicles leaving the project site to ensure that hazardous soils adhering to the wheels or undercarriage are removed prior to the vehicle leaving the site.

   h. The Contractor must obtain letters of commitment from the waste haulers and the TSD facility to haul and accept shipments.

   i. The Contractor must provide waste profile forms to OEGS for review and approval before transporting hazardous soil to the approved TSD facility.

2. Hauling

   a. The Contractor must coordinate manifesting, placarding of shipments, and vehicle decontamination. All quantities must be measured and recorded upon arrival at the disposal facility. If any deviation between the two records occurs, the matter is to be reported immediately to the Engineer and to be resolved by the Contractor to the satisfaction of the Engineer.

   b. The Contractor will be responsible, at its own cost for any and all actions necessary to remedy situations involving material spilled in transit or mud and dust tracked off-site.

   c. The Contractor must ensure that trucks are protected against contamination by properly covering and lining them with polyethylene sheeting or by decontaminating them prior to and between acceptances of loads. Trucks with loaded contaminated soil must be covered securely with tarp before leaving the project site to prevent generation of airborne dust during hauling. When loading soil determined by the Engineer to be impacted by MGP wastes, the Contractor must use impermeable, tight fitting truck covers. The Contractor must install and maintain a truck tracking pad to limit the amount of sediment that is transported from the site by vehicles. The truck tracking pad should be at least 24 feet wide and 50 feet long, and constructed of 3-6

inch washed stone with a depth of at least 12 inches. When working in areas determined to be impacted by MGP wastes by the Engineer, the truck tracking pad must additionally include liner(s) and a sump for decontaminating all vehicles leaving the site, and all decontamination fluids will be containerized for disposal.

d. The Contractor will be responsible for inspecting the access routes for road conditions, overhead clearance, and weight restrictions.

e. The Contractor must only use the transporter(s) identified in the approved MHP for the performance of work. Only a transporter with a current Part 364 Waste Transporter Permit from NYSDEC may transport hazardous soil. A revised MHP or an addendum to the original approved MHP must be submitted to OEGS for review and approval at no additional cost to the City for any use of substitute or additional transporters.

f. The Contractor must develop, document, and implement a policy for accident prevention.

g. The Contractor must not combine hazardous materials from other projects with material from this project.

h. No material will be transported until approval by the Engineer is obtained.

3. Off-Site Disposal

a. The Contractor must use only the disposal facility(ies) identified in the approved MPH for the performance of the work. A revised MHP or an addendum to the original approved MHP must be submitted to OEGS for review and approval at no additional cost to the City for any use of substitutions or additions of disposal facility.

b. The Contractor will be responsible for acceptance of the materials at an approved facility, for ensuring that the facility is properly permitted to accept the stated materials, and for ensuring that the facility provides the stated treatment and/or disposal services.

c. The City reserves the right to contact and visit the TSD facility and regulatory agencies to verify the agreement to accept the stated materials and to verify any other information provided.

d. In the event that the identified and approved facility ceases to accept the stated materials or the facility ceases operations, it is the Contractor's responsibility to locate an alternate approved and permitted facility(ies) for accepting materials. The alternate facility(ies) must be approved in writing by the Engineer in the same manner and with the same requirements as for the original facility(ies). This must be done at no extra cost or delay to the City.

e. The Contractor must obtain manifest forms and complete the shipment manifest records required by the appropriate regulatory agencies for verifying the material and quantity of each load in unit of volume and weight. Copies of each manifest must be submitted to the Engineer within four (4) business days following shipment, and within three (3) business days after notification of receipt of the facility. The signed manifests must be maintained and kept with the project field records. Any manifest discrepancies must be reported immediately to the Engineer and be resolved by the Contractor to the satisfaction of the Engineer.

f. The Contractor must submit all results and weights to the Engineer.

g. The Contractor is responsible to pay all fees associated with the generation and disposal of all excavated hazardous waste. These fees include, but are not limited to, the New York State Department of Finance and Taxation (DFT) quarterly fees for

hazardous waste and the NYSDEC annual hazardous waste regulatory fee program. The Contractor must submit a copy of proof of payment to the Engineer and OEGS.

4. Equipment and Vehicle Decontamination

   a. The Contractor must design and construct a portable decontamination station to be used to decontaminate equipment and vehicles that have been used to handle contaminated soil. The cost for this work will be paid under Item ESCR-8.01 S.

   b. Water generated during the decontamination process must be disposed of in accordance with **Section 8.01 W1**.

8.01 H.4 METHOD OF MEASUREMENT

Quantities for hazardous soils will be measured in tons. The tonnage will be determined by off-site truck scales, as per Subsection 8.01 H1.3.B, that are capable of generating load tickets.

8.01 H.5 PRICE TO COVER

A. The unit bid price bid per ton for Item ESCR-8.01 H will include the cost of furnishing all labor, materials, equipment, plan, and insurance for excavation, handling, transportation, disposal, documentation, fees, permits, loading, stockpiling, hauling, and any other incidentals necessary to complete all the work as specified herein for handling, transporting, and disposal of hazardous soil.

B. Final disposal of contaminated soil will be paid for under Item ESCR-8.01 C1 – Handling, Transporting and Disposal of Non-Hazardous Contaminated Soils. Disposal of decontamination water will be paid for under Item ESCR-8.01 W1 – Removal, Treatment and Discharge/Disposal of Contaminated Water.

C. Backfill will be paid for under its respective item as specified in the contract document.

D. The independent Environmental Consultant will be paid under Item ESCR-8.01 S – Health and Safety.

Payment will be made under:

Item No.	Description	Pay Unit
ESCR 8.01 H	HANDLING, TRANSPORTING, AND DISPOSAL OF HAZARDOUS SOIL	TONS

SECTION ESCR 8.01 S – HEALTH AND SAFETY

8.01 S.1 WORK TO INCLUDE

Health and Safety Requirements for work related to contaminated and / or hazardous soil:

(A) Scope of Work

It is the Contractor's responsibility to stage and conduct the Contractor's work in a safe manner. The Contractor must implement a Health and Safety Plan (HASP) for contaminated/hazardous soil intrusive activities as set forth in OSHA Standards 1910.120 and 1926.650-652. The Contractor must ensure that all workers have at a minimum hazard awareness training. The Contractor must segregate contaminated work area in secured exclusion zones. These zones must limit access to Contractor personnel specifically trained to enter the work area. The exclusion zone must be set up to secure the area from the public and untrained personnel. The project health and safety program will apply to all construction personnel including persons entering the work area. In addition, the Contractor must protect the public from on-site hazards, including subsurface contaminants associated with on-site activities. The HASP must be signed off by a Certified Industrial Hygienist and reviewed and approved by OEGS.

Soil and groundwater at the site may be contaminated with petroleum, solvents, manufactured gas plant (MGP) or other hazardous substances. Contractor must provide materials, equipment, and training to workers and authorized visitors to ensure their protection from these and any other hazards which may be identified during the course of this work. Workers in areas with evidence of contaminated material or known hazardous waste must have completed a 40-hour Hazardous Waste Operations and Emergency Response (HAZWOPER) training course that meets OSHA requirements of 29 CFR Part 1910, Occupational Safety and Health Standards. In addition, all personnel in contaminated work zones will have up-to-date 8-hour refresher training and medical monitoring.

The Engineer will conduct continuous air monitoring to ensure that concentrations of organic vapors and dust do not exceed safe action levels included in the RAP. If action levels specified by the Engineer are exceeded, the Engineer will direct the Contractor to implement dust suppression measures, abatement of organic vapors, mitigation of odors, and/or temporary work stoppage, as appropriate. The City or Engineer will not accept delay claims or change orders associated with conducting dust suppression, mitigation of odors, or abatement of organic vapors.

Work must include, but not be limited to:

1. Implementation of a baseline medical program.
2. Providing safety equipment and protective clothing for site personnel, including maintenance of equipment on a daily basis; replacement of disposable equipment as required; decontamination of clothing, equipment and personnel; and providing all other health and safety measures.
3. Providing, installing, operating and maintaining on-site emergency medical first aid equipment as specified in this section for which payment is not provided under other pay items in this Contract.
4. Providing, installing, operating, maintaining and decommissioning all equipment and personnel decontamination facilities specified within this section, including, but not limited to, the decontamination pad, decontamination water supply, decontamination water collection equipment and all other items and services required for the implementation of the health and safety requirements for which pay items are not provided elsewhere in this Contract.

5. Provide the minimum health and safety requirements for excavation activities within the limits of this Contract.

6. Implement and enforce a HASP: The HASP as presented in these specifications is dynamic with provisions for change to reflect new information, new practices or procedures, changing site environmental conditions or other situations which may affect site workers and the public. The HASP will also address measures for community protection, accident prevention, personnel protection, emergency response/contingency planning, air monitoring, odor control and hazardous chemicals expected on site. Providing a Confined Space Entry Program as defined in the Occupational Safety and Health Act, Confined Space Entry Standard, 29 CFR 1910.146.

7. Employ all necessary means to prevent on- and off-site odor nuisances. The procedures may include, but not limited to: (a) limiting the area of open excavations; (b) shrouding open excavations with tarps and other covers; (c) misting with odor masking agents; and/or (d) use of pre-approved foams to cover exposed odorous soils.

8. Ensure that the Engineer's air monitoring equipment is not damaged. The cost to repair any damage to equipment caused by the Contractor will be borne by the Contractor.

9. Responsible for any toxic effects to workers or authorized visitors from the air supplied to respirators or from toxic or damaging vapors or residues resulting from petroleum, solvents, or other hazardous substances in soil or groundwater.

(B) Environmental Consulting Services

The Contractor must retain an independent Environmental Consultant to obtain all permits and perform all soil and water sampling, and health and safety services.

1. If conditions within the exclusion zone are deemed hazardous, then the Contractor and its independent Environmental Consultant must ensure that all personnel working within identified exclusion zones and/or involved (direct contact) with the handling, storage or transport of hazardous and contaminated materials must have completed a minimum of forty (40) hours of Health and Safety Training on Hazardous Waste Sites in accordance with 29 CFR 1910.120(e). The training program must be conducted by a qualified safety instructor. If conditions in the exclusion zone are deemed to be non-hazardous, the independent Environmental Consultant must provide site specific training.

2. The Contractor must ensure that on-site management and supervisors directly responsible for or who supervise employees engaged in hazardous waste operations must receive the training specified in above and at least eight (8) additional hours of specialized training on managing such operations at the time of job assignment.

(C) Submittals

1. The Contractor must submit a written HASP, as specified herein, to OEGS for review and approval. The written HASP must be submitted, within thirty (30) calendar days after the availability of analytical results of the soil and groundwater testing, as required under Section 8.01 C2 and Section 8.01 W2. The Contractor must make all necessary revisions required by OEGS and resubmit the HASP to OEGS for acceptance. Start-up work for the project will not be permitted until written acceptance has been issued by OEGS.

2. Daily safety logs must be maintained by the Contractor and must be submitted to the Engineer either on request or on completion of the work. Training logs must be maintained by the Contractor and submitted to the Engineer either on request or on completion of the work. Daily logs on air monitoring during excavation activities must be prepared and

maintained by the Contractor and submitted to the Engineer either on request or upon completion of the work.

3. A closeout report must be submitted by the Contractor to the Engineer upon completion of the work within the defined exclusion zones. This report must summarize the daily safety and monitoring logs and provides an overview of the Contractor's performance regarding environmental and safety issues. The report must carefully document all areas where contamination has been found including pictures, addresses of locations, and potential sources.
4. Medical Surveillance Examinations: The Contractor must submit to the Engineer the name, office address and telephone number of the medical consultant utilized. Evidence of baseline medical examinations together with the evidence of the ability to wear National Institute for Occupational Safety and Health (NIOSH) approved respirators (as specified in American National Standards Institute (ANSI) Z88.6) must be provided to the Engineer for all construction personnel who are to enter the exclusion zones.
5. Accident Reports: All accidents, spills, or other health and safety incidents must be reported to the Engineer.

(D) Health and Safety Plan

The HASP must comply with OSHA regulations 29 CFR 1910.120/1926.65. This document must at a minimum contain the following:

1. Description of work to be performed
2. Site description
3. Key personnel
4. Worker training procedures
5. Work practices and segregation of work area
6. Hazardous substance evaluation
7. Hazard assessment
8. Personal and community air monitoring procedures and action levels
9. Personal protective equipment
10. Decontamination procedures
11. Safety rules
12. Emergency procedures
13. Spill prevention and control, as well as spill reporting procedures
14. Dust control, vapor/odor suppression procedures
15. Identification of the nearest hospital and route
16. Confined space procedures
17. Excavation safety procedures

8.01 S.2 MEASUREMENT

Health and Safety Requirements

A. 25% of the lump sum price will be paid when the following items are implemented or mobilized:

1. Medical surveillance program
2. Health and safety training
3. Health and safety plan
4. Environmental and personnel monitoring
5. Instrumentation
6. Spill control

7. Dust control
8. Odor control
9. Personnel and equipment decontamination facilities
10. Personnel protective clothing
11. Communications
12. Mobilization

B. 50% will be paid in proportional monthly amounts over the period of work.

C 25% will be paid when the operation is demobilized and removed from the project site.

8.01 S.3 PRICE TO COVER

Health and Safety Requirements

The lump sum price bid for the health and safety requirements will include all labor, materials, equipment, and insurance necessary to complete the work in accordance with these specifications. The price bid will include, but not be limited to, the following:

A. Providing training, safety personnel, air monitoring and medical examinations as specified.

B. Providing safety equipment and protective clothing for site personnel, including maintenance of equipment on a daily basis; replacement of disposable equipment as required; decontamination of clothing, equipment and personnel; and all other health and safety activities or costs not paid for under other pay items in this Contract.

C. Providing, installing, operating and maintaining on-site emergency medical and first aid equipment. This includes all furnishings, equipment, supplies and maintenance of all medical equipment, and all other health and safety items and services for which payment is not provided under other pay items in this Contract.

D. Providing, installing, operating, maintaining, and decommissioning all personnel and equipment decontamination facilities, including decontamination pad, decontamination water supply, and all other items and services required for the implementation of the health and safety requirements for which pay items are not provided elsewhere in this Contract. Vehicle decontamination pads will be included in the price of this item. Disposal of decontamination fluid will be paid for under Item ESCR-8.01 W1.

E. Spill Control

1. Payment will account for furnishing, installing, and maintaining all spill control equipment and facilities. Payment will include equipment and personnel to perform emergency measures required to contain any spillage and to remove spilled materials and soils or liquids that become contaminated due to spillage during work within the exclusion zones and handling of excavated soils and liquids from these areas. This collected spill material will be properly disposed of.

2. Payment under this item will not include testing, handling, transportation or disposal of petroleum-contaminated/potentially hazardous soils excavated during construction. The price for this work will be paid for under Items ESCR-8.01 C1, ESCR-8.01 C2, or ESCR-8.01 H, as appropriate.

F. Dust Control

Payment will account for furnishing, installing, and maintaining dust control equipment and facilities to be used whenever applicable dust levels are exceeded as required in the Remedial Action Plan and MGP Mitigation Work Plan and associated Construction HASPs. Payment will include all necessary labor, equipment, clean water, foam, and all

other materials required by the Dust Control Plan. The NYSDOH Community Air Monitoring Plan (CAMP) may be used as guidance.

G. Vapor/Odor Suppression

Payment will account for furnishing, installing and maintaining vapor/odor control equipment and facilities to be used whenever organic vapor monitoring or the presence of odors indicates that vapor suppression is required to protect workers or the public as required in the Remedial Action Plan, MGP Mitigation Work Plan, and associated Construction HASPs. Payment will include all necessary labor, equipment, clean water, foam and all other materials required by the Vapor/Odor Suppression Plan.

H. Mobilization/Demobilization

1. Mobilization

Payment will include the following, but not be limited to:

a. All work required to furnish, install and maintain all signs, fencing, support zone facilities, parking areas and all temporary utilities;

b. All work required to furnish, install, and maintain an office space with phone and utilities for health and safety personnel;

c. All work required for complete preparation of lay down area for roll-off containers, including sampling, and any required fencing;

d. All direct invoiced cost from bonding companies and government agencies for permits and costs of insurance; and

e. All other items and services required for mobilization and site preparation.

2. Demobilization

Payment will include but not be limited to: All work required to sample the area; remove from the site all equipment, temporary utilities and supporting facilities; performance of necessary decontamination and repairs; disposal of disposable equipment and protective gear and other items and services required for complete demobilization.

Payment will be made under:

Item No.	Description	Pay Unit
ESCR 8.01 S	HEALTH AND SAFETY	L.S.

SECTION ESCR 8.01 W1 – REMOVAL, TREATMENT, AND DISPOSAL / DISCHARGE OF CONTAMINATED WATER

8.01 W1.1 WORK TO INCLUDE

General: This work must consist of the proper removal and disposal of all contaminated groundwater and decontamination water generated during construction operations. The Contractor must be solely responsible for the proper disposal or discharge of all contaminated water generated at the job site. The Contractor will have the option of treating water on-site for discharge to the sewer system or removing contaminated water for off-site disposal. The Contractor must be responsible to choose a method compatible to the construction work and will be compensated on a per day basis regardless of method employed. The Contractor will be compensated for only those days where the system is in full operation.

The Contractor must retain a dewatering/water treatment Specialist (hereinafter the "Specialist") and laboratory as specified under **Section 8.01 W2**, to conduct any testing that may be required for disposal of impacted water.

The dewatering/water treatment Specialist is responsible to obtain all permits; perform all water sampling, testing; and provide ancillary services related to dewatering and water treatment. The Specialist must at a minimum provide documentation to OEGS demonstrating the minimum requirements as set forth below:

1. The Specialist must demonstrate that it has, at a minimum, three (3) years' experience in the design of dewatering plans. The Specialist should demonstrate expertise dealing with issues associated with contaminated water. During that three (3) year period, the Specialist must demonstrate that it provided dewatering and water treatment systems as a routine part of its daily operations.
2. The Specialist must be experienced in work of this nature, size, and complexity and must have previous experience in working with the NYSDEC.
3. The Specialist must furnish a project listing identifying the location, nature of services provided, owner, owner's contact, contact's telephone number, project duration and value for at least five (5) projects within the last three (3) years of a similar nature, size, and complexity to this one.
4. If conditions within the exclusion zone are deemed hazardous, then the Contractor and its independent Environmental Consultant must ensure that all personnel working within identified exclusion zones and/or involved (direct contact) with the handling, storage or transport of hazardous and contaminated material must have completed a minimum of forty (40) hours of Health and Safety Training on Hazardous Waste Sites in accordance with 29 CFR 1910.120(e). The training program must be conducted by a qualified safety instructor. If conditions in the exclusion zone are deemed to be non-hazardous, the Specialist will be responsible to provide site-specific training to its employees and other affected personnel.
5. The Contractor must ensure that on-site management and supervisors directly responsible for or who supervise employees engaged in hazardous waste operations must receive the training specified in above and at least eight (8) additional hours of specialized training on managing such operations at the time of job assignment.

The Contractor must document all operations associated with the handling, sampling and disposal of contaminated water, and ensure that they are in compliance with applicable Federal, State and Local statutes and regulations.

The Contractor must supply all labor, equipment, transport, plant, material, treatment, and other incidentals required to conduct the specified work of this section.

If water will be disposed of into the sewer system, the Contractor must ensure the Specialist treats the water to comply with the New York City Department of Environmental Protection (NYCDEP) Sewer Effluent Limit concentrations prior to discharge. The Contractor is responsible for providing settling or filtering tanks and any other apparatus required by NYCDEP. Alternatively, the Contractor can provide a plan for transport and disposal at an off-site waste disposal facility.

Within forty-five (45) calendar days after award of Contract, the Contractor must submit to OEGS for review and approval, a Water Handling Plan (WHP). The WHP must be approved by OEGS prior to the Contractor's commencement of work. The minimum requirements for the WHP are specified in **Section 8.01W 1.2**, for each type of disposal (disposal into the sewer or off-site disposal). The Contractor must maintain a complete, up to date copy of the WHP on the job site at all times.

8.01 W1.2 CONSTRUCTION DETAILS

For each disposal method the Contractor proposes to utilize (disposal to sewer or off-site disposal), the WHP must include the information required in paragraphs A and B below, as appropriate.

A. On-site treatment and discharge into New York City sewers.

1. Regulations: The Contractor must comply with all applicable regulations. This includes but may not be limited to:

   Title 15-New NYCDEP Sewer Use Regulations.

2. Permits: The Contractor is solely responsible to obtain all necessary and appropriate Federal, State and Local permits and approvals. The Contractor will be responsible for performing all and any system pilot tests required for permit approval. This includes but may not be limited to:

   a. Industrial waste approval for the New York City sewer system.

   b. Groundwater discharge permit for the New York City sewer system (NYCDEP Division of Sewer Regulation and Control), if discharge to sewer exceeds 10,000 gallons per day.

   c. The Contractor must comply with NYSDEC State Pollutant Discharge Elimination System (SPDES) Permit Number GP-0-10-001, General Permit for Stormwater Discharges.

   d. An NYSDEC water withdrawal permit is required if discharge exceeds 100,000 gallons per day.

   e. Wastewater quality control application, NYCDEP.

3. The WHP for this portion of the work must include the following at a minimum:

   a. Identification and design of Contractor's proposed treatment to assure that the water meets the NYCDEP sewer use guidelines and/or NYSDEC discharge permit requirements prior to discharge to the sewer, including identification of all materials, procedures, settling or filtering tanks, filters and other appurtenances proposed for treatment and disposal of contaminated water.

b. The name, address and telephone number of the contact for the Contractor's proposed chemical laboratory, as well as the laboratory's certifications under Federal, State or non-governmental bodies.

c. The name, address and telephone number of the contact for the Contractor's proposed independent Environmental Consultant.

d. Copies of all submitted permit applications and approved permits the Contractor have received.

e. Periodic inspection, monitoring, and reporting in accordance with discharge permit requirements.

4. Materials

The Contractor must supply all settling or filtering tanks, pumps, filters, treatment devices and other appurtenances for treatment, temporary storage and disposal of contaminated water. All equipment must be suitable for the work described herein.

5. Execution

a. The Contractor is solely responsible for disposal of all water, in accordance with all Federal, State and Local regulations.

b. The Contractor is solely responsible for any treatment required to assure that water discharged into the sewer is in compliance with all permits and Federal, State and Local statutes and regulations.

c. The Contractor is solely responsible for the quality of the water disposed of into the sewers.

d. The Contractor is responsible for sampling and testing of water for the NYCDEP/NYSDEC discharge concentrations. The quality of the data is the Contractor's responsibility. Any sampling and testing must be conducted and paid in accordance with **Section 8.01 W2**.

e. The Contractor will be responsible to maintain the discharge rate to the sewer such that all permit requirements are met, the capacity of the sewer is not exceeded and no surcharging occurs downstream due to the Contractor's actions.

f. An NYSDEC water withdrawal permit is required if discharge exceeds 100,000 gallons per day.

g. Disposal of Treatment Media

(1) The Contractor will be responsible for disposal or recycling of treatment media in accordance with all Federal, State and Local regulations.

(2) The Contractor must provide the Engineer with all relevant documentation concerning the disposal of treatment media, including manifests, bills of lading, certificates of recycling or destruction and other applicable documentation.

(3) Disposal of treatment media will not be considered as a separate pay item; instead it will be considered as incidental work thereto and included in the unit price bid.

B. Off-Site Disposal

1. Regulations: The Contractor must conform to all applicable Federal, State and Local regulations pertaining to the transportation, storage and disposal of any hazardous and/or non-hazardous materials as listed in Attachment 2.

2. The following must be submitted to the Engineer prior to initiating any off-site disposal:

   a. (1) Name and waste transporter permit number

      (2) Address

      (3) Name of responsible contact for the waste transporter

      (4) Any and all necessary permit authorizations for each type of waste transported

      (5) Previous experience in performing the type of work specified herein

   b. General information for each proposed treatment/disposal facility and at least one backup treatment/disposal facility

      (1) Facility name and USEPA identification number

      (2) Facility location

      (3) Name of responsible contact for the facility

      (4) Telephone number for contact

      (5) Unit of measure utilized at facility for costing purposes

   c. A listing of all permits, licenses, letters of approval and other authorizations to operate, which are currently held and valid for the proposed facility as they pertain to receipt and management of the wastes derived from this Contract.

   d. A listing of all permits, licenses, letters of approval and other authorizations to operate which have been applied for by the proposed facility but not yet granted or issued. Provide dates of application(s) submitted. Planned submittals must also be noted.

   e. The Contractor must specify and describe the disposal/containment unit(s) that the proposed facility will use to manage the waste and provide dates of construction and beginning of use, if applicable. Drawings may be provided. The Contractor must identify the capacity available in the units and the capacity reserved for the subject waste.

   f. The Contractor must provide the date of the proposed facility's last compliance inspection.

   g. A list of all active (unresolved) compliance orders, agreements, enforcement notices or notices of violations issued to the proposed facility must be submitted. The source and nature of the cause of violation must be stated, if known. If groundwater contamination is noted, details of the facility's groundwater monitoring program must be provided.

   h. Description of all sampling and field/laboratory analyses that will be needed to obtain disposal facility approval.

3. Materials

All vessels for temporary storage and transport to an off-site disposal facility must be as required in DOT regulations.

4. Execution

   a. General

      (1) The Contractor must organize and maintain the material shipment records/manifests required by Federal, State and Local laws. The Contractor must include all bills of lading, certificates of destruction, recycling or treatment and other applicable documents.

      (2) The Contractor must coordinate the schedule for truck arrival and material deliveries at the job site to meet the approved project schedule. The schedule must be compatible with the availability of equipment and personnel for material handling at the job site.

      (3) The Contractor must inspect all vehicles leaving the project site to ensure that contaminated liquids are not spilling and are contained for transport.

      (4) The Contractor must obtain letters of commitment from the waste haulers and the treatment, disposal or recovery facility to haul and accept shipment. The letter must indicate agreement to handle and accept the specified estimated quantities and types of material during the time period specified in the project schedule and any time extension as deemed as necessary.

      (5) The Contractor must verify the volume of each shipment of water from the site.

      (6) The Contractor is responsible for sampling and testing of water for off-site disposal. The quality of the data is the Contractor's responsibility. Any sampling and testing must be conducted and paid in accordance with **Section 8.01 W2**.

      (7) The Contractor is responsible for any additional analyses required by the TSD facility, and for the acceptance of the water at an approved TSD facility.

   b. Hauling

      (1) The Contractor must not deliver waste to any facility other than the TSD facility(ies) listed on the shipping manifest.

      (2) The Contractor must coordinate manifesting, placarding of shipments, and vehicle decontamination. All quantities must also be measured and recorded upon arrival at the TSD facility(ies). If any deviation between the two records occurs, the matter is to be reported immediately to the Engineer and must be resolved by the Contractor to the satisfaction of the Engineer.

      (3) The Contractor will be responsible for any and all actions necessary to remedy situations involving material spilled in transit or mud and dust tracked off-site. This cleanup must be accomplished at the Contractor's expense.

      (4) The Contractor will be responsible for inspecting the access routes for road conditions, overhead clearance and weight restrictions.

      (5) The Contractor must only use the transporter(s) identified in the WHP for the performance of work. Only a transporter with a current Part 364 Waste Transporter Permit from NYSDEC may transport this material. Any use of substitute or additional transporters must have previous written approval from the Engineer at no additional cost to the City.

      (6) The Contractor must develop, document, and implement a policy for accident prevention.

(7) The Contractor must not combine waste materials from other projects with material from this project.

(8) The Contractor must obtain for the City a hazardous waste generator identification number and will sign the manifest as the generator, if necessary.

(9) No material must be transported until approved by the Engineer.

c. Disposal Facilities

(1) The Contractor must use only the TSD facility(ies) identified in the WHP for the performance of the work. Substitutions or additions must not be permitted without prior written approval from OEGS, and, if approved, must be at no extra cost to the City.

(2) The Contractor will be responsible for acceptance of the material at an approved TSD facility, for ensuring that the facility is properly permitted to accept the stated material, and that the facility provides the stated storage and/or disposal services.

(3) The City reserves the right to contact and visit the disposal facility and regulatory agencies to verify the agreement to accept the stated material and to verify any other information provided. This does not in any way relieve the Contractor of the Contractor's responsibilities under this Contract.

(4) In the event that the identified and approved facility ceases to accept the stated materials or the facility ceases operations, it is the Contractor's responsibility to locate an alternate approved and permitted facility(ies) for accepting materials. The Contractor is responsible for making the necessary arrangements to utilize the facility(ies), and the alternate facility(ies) must be approved in writing by the Engineer in the same manner and with the same requirements as for the original facility(ies). This must be done with no extra cost or delay to the City.

d. Equipment and Vehicle Decontamination

(1) The Contractor must design and construct a portable decontamination station to be used to decontaminate equipment and vehicles exiting the exclusion zone. The cost for this work will be paid under Item ESCR-8.01 S.

8.01 W1.3 METHOD OF MEASUREMENT

The quantity for on-site treatment and discharge or off-site disposal will be on a per day basis.

8.01 W1.4 PRICE TO COVER

(A) The per day price bid for Item ESCR-8.01 W1 will include the cost of furnishing all labor, materials, equipment, plan, and insurance for handling, transportation, disposal, documentation, permits, hauling, mobilization and demobilization, and any other incidentals thereto to complete the work.

(B) The Contractor will not be paid for water that is within the NYCDEP Sewer Discharge Limits and/or NYSDEC permit discharge limits.

Payment will be made under:

Item No.	Description	Pay Unit
ESCR 8.01 W1	REMOVAL, TREATMENT, AND DISCHARGE/DISPOSAL OF CONTAMINATED WATER	DAY

SECTION ESCR 8.01 W2 –SAMPLING AND TESTING OF CONTAMINATED WATER

8.01 W2.1 WORK TO INCLUDE

(A) Description

The work will consist of sampling and testing of potentially contaminated groundwater, surface runoff within the excavated area and all contaminated water generated during the decontamination process.

(B) Sampling and Testing

1. The Contractor is responsible, at a minimum, for sampling and testing of contaminated water for the NYCDEP Sewer Effluent Limit concentrations as listed in Section 8.01 and/or NYSDEC SPDES Permit Number GP-0-10-001, General Permit for Stormwater Discharges and/or any other NYSDEC discharge permitting requirements, and in accordance with the Engineer-approved SSP/FSP and the Investigation HASP, as specified in Section 8.01 C2. The quality of the data is the Contractor's responsibility. Any additional testing required by the Federal, State and/or disposal facilities must be included in the bid price of this Item.
2. All sampling and testing must be conducted by a person trained in sampling protocols using accepted standard practices and/or the NYSDEC sampling guidelines and protocols.
3. All sample containers must be marked with legible sample labels which must indicate the project name, sample location and/or container, the sample number, the date and time of sampling, preservatives utilized, how the sample was chilled to 4 degrees Celsius, and other information that may be useful in determining the character of the sample.
4. Chain-of-custody must be tracked from laboratory issuance of sample containers through receipt of the samples.
5. The Contractor must maintain a bound sample log book. The Contractor must provide the Engineer access to it at all times and must turn it over to the Engineer in good condition at the completion of the work. The following information, as a minimum, must be recorded to the log:
    a. Sample identification number
    b. Sample location
    c. Field observation
    d. Sample type
    e. Analyses
    f. Date/time of collection
    g. Collector's name
    h. Sample procedures and equipment used
    i. Date sent to laboratory/name of laboratory
6. Only dedicated sampling equipment may be used to collect these samples. All equipment involved in field sampling must be decontaminated before being brought to the site, and must be properly disposed of after use.
7. Samples must be submitted to the Contractor's laboratory within the holding times for the parameters analyzed.
8. All analyses must be done by a laboratory that has received approval from the NYSDOH's ELAP for the methods to be done. The Contractor must specify the laboratory in the WHP.

9. Analytical results for water discharged to the sewer and for off-site disposal must be submitted to the Engineer no later than five (5) days after sample collection.
10. The City reserves the right to direct the Contractor to conduct alternative sampling in lieu of the parameters described above, if the situation warrants. The substitute sampling parameters will be of equal or lesser monetary value than those described above, as determined by industry laboratory pricing standards.

8.01 W2.2 METHOD OF MEASUREMENT

Quantities for samples will be measured as the number of sets of samples that are tested for the NYCDEP Sewer Effluent Limit concentrations and/or NYSDEC discharge permitting requirements. A set will be defined as one (1) representative sample analyzed for the full range of NYCDEP parameters as specified in Section 8.01.

8.01 W2.3 PRICE TO COVER

The unit price bid per set for Item ESCR-8.01 W2-1 will include the cost of furnishing all labor, materials, equipment, plan, and insurance for handling, transport, sampling, testing, documentation, permits, other incidentals necessary to complete the work of sampling and testing of contaminated water. Any additional costs incurred by the Contractor for sampling and testing of contaminated water will be included in the bid price of this Item.

Payment will be made under:

Item No.	Description	Pay Unit
ESCR 8.01 W2-1	NYCDEP-SAMPLING AND TESTING OF CONTAMINATED WATER	SETS

SECTION ESCR 900-SSVS – SUB-SLAB VENTING SYSTEM

ESCR 900-SSVS.1. DESCRIPTION.

Under this item, the Contractor is required to perform unforeseen installation of sub-slab venting systems (SSVS) as part of the construction of the buildings within the project limits, as shown on the contract documents and specifications, or as directed by the Engineer. The sub-slab venting systems installation work may consist of:

- Four (4)-inch diameter, 0.02-inch slotted, and solid, polyvinyl chloride piping installed beneath the building's concrete foundation slab and waterproofing within 16-inch wide by 16-inch deep trenches;
- For the East 10th Comfort Station, Maintenance and Operations Area 2 Building (M&O 2), Maintenance and Operations Area 3 Building (M&O 3), and the Tennis House Building, two lengths of pipe would be installed beneath each building. The pipes would travel the length of the building parallel to each other, dividing the building into thirds. These sub-grade piping sections would be connected with an additional section of pipe (perpendicular) forming a "U' or an "H" shape to allow for one vent to the roof;
- For the Track and Field Building, three lengths of pipe would be installed beneath the building slab. The pipes would travel the length of the building parallel to each other, dividing the building into quarters. These sub-grade piping sections would be connected with an additional section of pipe (perpendicular) forming a "U' or an "H" shape to allow for one vent to the roof;
- The base of the trenches to be compacted and covered with non-woven geotextile;
- Trenches to be backfilled with ASTM #5 aggregate;
- Minimum 6-inch thick layer of gas permeable aggregate under the building slab outside of piping trench areas;
- One (1) interior riser pipe constructed of 4-inch diameter galvanized steel extending from each building slab to building roof with a turbine; and
- All other unforeseen sub-slab venting system related work.

ESCR 900-SSVS.2. QUALITY ASSURANCE.

The Contractor or subcontractor that will install the sub-slab venting systems shall have not less than seven (7) years' continuous experience in the installation operations required to install sub-slab venting systems or other related work that may be required to complete the work.

ESCR 900-SSVS.3. MATERIALS.

The Contractor must provide shop drawings signed by a Professional Engineer licensed in the State of New York, catalog cuts and/or other manufacturer documentation in order to verify new materials to be installed or constructed as directed and approved by the Engineer.

ESCR 900-SSVS.4. CONSTRUCTION DETAILS.

The Contractor must take photos prior to, during and after construction of items being constructed under this section. The Contractor must organize photos with a key map / sketch for each property to the satisfaction of the Engineer.

If during the course of the work there is an unforeseen changed condition than was not documented in the scope of "sub-slab venting system", the Contractor must stop work and notify the Engineer.

The Contractor is responsible to complete the sub-slab venting system work to the satisfaction of the Engineer.

ESCR 900-SSVS.5. MEASUREMENT.

The quantity of SSVS WORK to be measured for payment will be the number of SSVS systems actually installed by the Contractor to the satisfaction of the Engineer.

ESCR 900-SSVS.6. BASIS OF PAYMENT.

The unit price bid for each SSVS WORK item must cover the cost of all labor, materials, plant, equipment, insurance, and necessary incidentals required to furnish, install, and test the new SSVS; all in accordance with the the contract drawings, the specifications and the directions of the Engineer.

Payment will be made under:

Item No.	Item	Pay Unit
ESCR 901-SSVS	SSVS WORK-COMFORT STATION	EACH
ESCR 902-SSVS	SSVS WORK-M&O 2	EACH
ESCR 903-SSVS	SSVS WORK-M&O 3	EACH
ESCR 904-SSVS	SSVS WORK-TENNIS BLDG	EACH
ESCR 905-SSVS	SSVS WORK-TRACK BLDG	EACH

EP7 (1.0) - PAGES

GAS COST SHARING (EP-7) STANDARD SPECIFICATIONS

NOTICE

THE PAGES CONTAINED IN THIS SECTION REPRESENT THE GAS COST SHARING WORK THAT SHALL APPLY TO AND BECOME A PART OF THE CONTRACT.

(NO TEXT ON THIS PAGE)

TABLE OF CONTENT

I - NOTICE TO ALL BIDDERS; GAS COST SHARING WORK

II - GENERAL PROVISIONS; GAS COST SHARING WORK

1. General
2. Gas Interferences And Accommodations
   2a. Water Main Accommodations
   2b. Sewer Accommodations
3. Quantity Overruns, EP-7 Funded Bid Items
4. Changes And Extra Work
5. Excavation
6. Backfilling And Street Restoration
7. Non-Responsive Bids
8. Minimum Clearances
9. Work By Facility Operator
10. Materials Furnished By Facility Operator
11. Liability And Insurance
12. Width And Depth Of Excavation
13. Depth And Crossing Angles Of Gas Facilities
14. Maintenance Of Traffic For Gas Work
15. Relocated Gas And Temporary Systems Installation
16. Role Of Company Inspector
17. Coordination With Gas Company

III - TECHNICAL SECTION

SECTION 6.01 - Trench Crossings; Support And Protection Of Gas Facilities And Services.
SECTION 6.02 - Extra Excavation For The Installation Of Catch Basin Sewer Drain Pipes With Gas Interferences.
SECTION 6.02.1 - Extra Excavation For The Installation Of Catch Basin Sewer Drain Pipes With Upstream Inverts Greater Than Six (6) Feet.
SECTION 6.03 - Removal Of Abandoned Gas Facilities. All Sizes.
SECTION 6.03.1 - Removal Of Abandoned Gas Facilities With Possible Coal Tar Wrap. All Sizes. (For National Grid Work Only)
SECTION 6.03.1a - Removal Of Abandoned Gas Facilities With Possible Coal Tar Wrap. All Sizes. (For Con Edison Work Only)
SECTION 6.04 - Adjust Hardware To Grade Using Spacer Rings/Adaptors. (Street Repaving.)
SECTION 6.05 - Adjust Hardware To Grade By Resetting. (Road Reconstruction.)
SECTION 6.06 - Special Care Excavation And Backfilling.
SECTION 6.07 - Test Pits For Gas Facilities.
SECTION 6.08A - Pier and/or Plate Method of Protection for Ductile Iron Water Main with Less Than 24" Cover.
SECTION 6.09 - Trench Excavation and Backfill for New Gas Mains and Services (For National Grid Work Only)
SECTION 6.09a - Trench Excavation and Backfill for New Gas Mains and Services (For Con Edison Work Only)

IV - STANDARD SKETCHES; GAS COST SHARING WORK

NO. 1 - Support Requirements For Gas Mains And Services Crossing Excavation Greater Than 4'-0" Wide At Any Angle
NO. 1A - Support Requirements For Gas Mains Over 16" Diameter Up To And Including 48" Diameter Crossing Excavation At Any Angle
NO. 2 - Typical Methods Of Measurement For Gas Crossings
NO. 3 - Utility Crossings During Catch Basin Chute Connection Pipe Installation

NO. 4 - Utility Crossings During Catch Basin Chute Connection Pipe Installation (Extra Depth)
NO. 5 - Gas Main Encroachment On And/Or Parallel To Excavation Of Unsheeted Trench

V - PRELIMINARY GAS WORK TO BE PERFORMED BY FACILITY OPERATOR

VI - LISTING OF APPROXIMATE LOCATIONS OF EP-7 BID ITEMS QUANTITIES

I - NOTICE TO ALL BIDDERS; GAS COST SHARING WORK

All prospective bidders are hereby advised that, pursuant to the "Gas Facility Cost Allocation Act", ("the Act"), the City of New York has entered into an agreement ("the Agreement") with the gas companies (Con Edison or National Grid (formerly KeySpan Energy Delivery)) operating in their respective areas of the City to "share" the cost of facility relocation and/or support and protection of facilities disturbed by proposed water and/or sewer and related City work specified in this contract. Therefore, bid items, specifications and estimated quantities for the incremental costs of support and protection of certain gas facilities have been included in this contract. The low bid for this contract shall be determined by examining each bid for all work to be performed under this contract including any work of support and protection of gas facilities to be performed. The Contractor shall not seek additional compensation from gas companies except as specifically set forth in its contract.

II - GENERAL PROVISIONS; GAS COST SHARING WORK

1. General:

The Contractor shall perform City work with interferences from existing live and abandoned gas facilities. This shall be defined as utility work. Therefore, this contract includes bid items, specifications and estimated quantities designed to fully compensate him/her for the incremental costs of supporting, protecting, providing accommodations and, avoiding disturbing gas facilities located in the streets shown on the contract drawings. In the event that any other provisions of this contract related to gas facilities (or private utilities) conflict with these provisions, these provisions shall supersede and govern all work related to gas facilities owned by the companies operating in the project area. All utility work, as defined in these specifications, including changes and additions thereto shall be paid solely by the City except when specified otherwise in this contract. Contractor hereby agrees that the facility operator shall not be liable to pay him/her for any work performed including extra utility work. Contractor agrees that its bid prices include all compensation for loss of productivity and efficiency, idle time, delays (including any delays occasioned by negotiation of a contract change), change in operations, mobilization, demobilization, remobilization, added cost or expense, lost of profit, other damages or impact costs that may be suffered by or because of utility work, or the presence of gas facilities in the proximity of City work and that it will not seek additional compensation for these items. All disputes shall be resolved as specified in the contract.

Pursuant to the Act, Agreement, and the New York City Administrative Code, the gas company(ies) has been directed by the Commissioner and is required to perform all maintenance, repairs, replacement, shifting, alteration, relocation, and/or removal work that are not part of this contract. By having bid on this contract, the Contractor understands and agrees that the Commissioner has preasserted any right the City has to require, including the issuance of any directives or so called "order outs" under the New York City Administrative Code, any or all gas companies to maintain, repair, replace, protect, support, shift, alter, relocate, and/or remove all gas facilities that are about to be disturbed by the City contract work. The issuance of additional such directives during the performance of the contract work, where necessary in the sole judgment of the Commissioner, shall be initiated by such Commissioner as set forth in the relevant sections of the Act and Agreement. Contractor further agrees to insert such requirements as set forth herein above into any contracts with its approved subcontractors so that its subcontractors also understand and agree to such contract requirements.

2. Gas Interferences And Accommodations:

During the performance of sewer and water main work funded by the New York City Department of Environmental Protection (NYCDEP), as instructed by the Engineer, the use of any applicable contract bid item is allowed in order to resolve and accommodate all gas facilities interferences with such City work, including the removal of contaminated soil in associated trench excavation. This is in addition to the specified EP-7 bid items in the contract. Payment for such accommodation shall be funded by EP-7 bid item "UTL-GCS-2WS - GAS INTERFERENCES AND ACCOMMODATIONS" (F.S. Fixed Sum). The value of such accommodation shall be computed by multiplying the appropriate unit prices bid to the quantity of work performed, as determined by the Engineer, and applying the total amount thus to be paid

to EP-7 bid item "UTL-GCS-2WS - GAS INTERFERENCES AND ACCOMMODATIONS". When EP-7 bid item "UTL-GCS-2WS - GAS INTERFERENCES AND ACCOMMODATIONS" does not exist, such additional accommodation work shall be at no cost to the City but shall be a matter of adjustment between gas facility operator and Contractor. Private facilities, other than gas, that become in interference due to gas interferences accommodations shall also be accommodated, if so directed by the Resident Engineer, at no additional cost to the City and, provided that its owner agrees to be responsible for all additional costs to Contractor, otherwise, such facility shall be ordered by the City to be maintained, shifted, relocated or replaced by its owner at his/her expenses.

2a. Water Main Accommodations:

When water main construction is to be performed in this contract, Contractor shall be required, if warranted by field conditions, and at locations designated by the Resident or Borough Engineer, to change the vertical or horizontal alignment of water mains including but not limited to all additional labor, material, work method accommodations, furnishing, delivering and laying offset fittings and pipes, etc., necessary in order to complete water main installation and, avoid gas interferences in the project area, including street intersections. Typical work method accommodations shall include, but not be limited to, pier and plate, installation of filter fabric and select fill, etc. Such work shall be performed as directed by the Engineer and in accordance with contract specifications and latest edition of water mains standards and specifications.

2b.Sewer Accommodations:

When sewer construction is to be performed in this contract, Contractor shall be required, if warranted by field conditions, and at locations designated by the Resident or Borough Engineer, to change the horizontal alignment of sewer facilities (if possible) including but not limited to all additional labor, material, work method accommodations, furnishing, delivering and construction of additional manholes or modification of manholes/catch basins, extending chute connections, house connections, using alternate materials and methods, poured-in-place structures, etc., necessary in order to complete sewer installation and, avoid gas interferences in the project area, including street intersections. The term sewer facility shall include, but not be limited to, all sewer pipe and appurtenances, manholes, catch basins, catch basin chutes, etc. Such work shall be performed as directed by the Engineer and in accordance with contract specifications and latest edition of sewer standards and specifications.

3. Quantity Overruns, EP-7 Funded Bid Items:

No quantity overrun, in excess of one hundred twenty five (125) percent, shall be permitted for EP-7 funded bid items (gas) included in this contract, except when Resident Engineer determines that such overruns are caused by field modifications to planned City work, or approved construction methods, or contract scope changes. Overruns not paid by City shall be negotiated and paid to Contractor by gas facility operator who then shall be entitled to reimbursement by NYCDEP under established cost sharing procedures.

4. Changes And Extra Work:

This section is not applicable to work defined under "Emergency Reconstruction Contracts" or so-called "Where and When Contracts" since these projects, by definition, inherently encounter unanticipated gas facilities and cannot be pre-engineered. In all other cases, any contract changes proposed for City work shall also cover and include all associated changes to support and protection of gas facilities affected by such changes to City work. In all other cases where the Contractor finds that City work cannot be performed as planned and specified and/or, as approved because of a need to support, protect and/or alleviate interferences from gas facilities that were not listed and/or shown, or incorrectly shown in contract plans and specifications, he shall immediately notify the Resident Engineer and the facility operators' representative of his findings. Resident Engineer shall promptly examine such claims and determine whether or not such work is covered by contract bid items and /or specifications (contract bid items and specifications shall include city contract items as well as EP-7 items). The Resident Engineer shall also

examine the claim to determine if the application of EP-7 bid item "UTL-GCS-2WS - GAS INTERFERENCES AND ACCOMMODATIONS" is appropriate to resolve the claim. If upon examination, the Engineer determines that such field conditions were unanticipated (not shown and/or listed, or incorrectly shown in contract documents) and are not covered by bid items and contract specifications, he shall then direct the Contractor and the affected facility operator to negotiate the cost of supporting and protecting, and/or alleviating the impact on City work caused by such unanticipated gas facilities with each other with the understanding that the performance of City work shall continue during negotiations. If a cost agreement is reached, the Contractor and facility operator shall adjust such costs between themselves at no additional costs to the City contract. If the Contractor and affected facility operator do not reach an agreement concerning the price to be paid for the extra work within five (5) business days of the Engineer's directive to engage into such negotiations and, after considering: public safety and inconvenience, requirements of laws and regulations applicable to private utilities, integrity of all utility systems, including but not limited to sewer and water, gas, electric, telephone and, cable TV facilities, sound engineering practices, cost (long and short term) to all affected parties, and potential City work delays, then the Resident Engineer, depending on nature and severity of interferences with City work, shall either, direct the facility operator to relocate or replace its facilities at its own discretion and cost, reimbursable by NYCDEP under established gas cost sharing procedures or, direct the Contractor to perform the utility work on actual time, material and equipment costs basis pursuant to relevant contract requirements and amendments. Contract bid prices for any applicable items of work involved shall be applied, or converted to an allowance for time and material charges. Changes shall be for affected portions of utility work and, shall be processed with EP-7 funds.

5. Excavation:

All excavators shall notify the NYC/LI One Call Center at 1-800-272-4480 at least two (2) working days, not including the day of the call, but not more than ten (10) working days in advance of the start of any excavation work. The gas company(ies) will mark out its facilities within the project limits and provide Construction Inspector(s) during all excavation work in close proximity (within twelve (12) inches) to gas facilities. The Contractor shall exercise extreme caution when excavating in the vicinity of any gas facilities. Hand excavation shall be performed within twelve (12) inches of gas facilities. The Contractor prior to excavating underneath these facilities shall adequately support all gas facilities. Standard support details for gas facilities have been included in the specifications. Any damage to gas facilities shall be reported immediately to the gas company(ies). The Contractor shall be responsible for all cost associated with repairs made necessary by damages caused by his operations.

6. Backfilling And Street Restoration:

Backfilling operations and street restorations shall be in accordance with contract requirements.

7. Non-Responsive Bids:

Every gas (EP-7) bid item has a suggested "Not less than" value per unit indicated on contract bid sheet. Bids resulting in cost of less than suggested for EP-7 items are hereby prohibited and if submitted shall be considered NON-RESPONSIVE.

8. Minimum Clearances:

Clearance requirements for City work shall govern and supersede any clearance requirement of gas facility operator. Therefore, a minimum of twelve (12) inches clearance between private utilities and City water mains, sewers or related structures to be installed in this contract shall be maintained. When this clearance is not attainable, the Resident Engineer may allow a minimum of four (4) inches clearance. With less than twelve (12) inches clearance a neoprene/polyethylene shield (to be provided by facility operator) shall be installed as part of all work item specifications. However, if Resident Engineer determines that City work cannot be performed within allowable clearance and no reasonable City accommodation (no-cost change to City work) is possible, the City shall direct the facility operator to remove, relocate, shift, or alter their facility(ies) pursuant to the New York City Administrative Code.

9. Work By Facility Operator:

The facility operator may find it necessary to perform the following types of work during performance of City work: accommodating a contractor's request for gas facilities modifications (in order to facilitate City contractor's proposed construction method) or, remedial and emergency work on gas facilities proper with their own resources and materials if an approved method of construction for City work causes unanticipated disturbances to gas facilities or, replacing defective gas facilities when they are exposed by the Contractor and their actual conditions are observable by the facility operator. Also included in the above category of defective gas facilities are: the presence of environmental contaminants attributable to the gas facility in or around gas facilities. If such work is deemed required by the facility operator or if facility operator is directed by the City to address such deficiencies at any time during the course of construction, the Contractor shall modify the construction schedule at no cost to the City and allow the facility operator five (5) business days to perform such work without interferences. Additional costs to the facility operator (in cases of accommodations) or, Contractor (in cases of defective gas facilities) due to such gas work, if any, shall be the responsibility of the parties involved and not of the City. Such costs shall be a matter of adjustment between the Contractor and the facility operator.

10. Materials Furnished By Facility Operator:

It shall be the Contractor's responsibility to inspect material to be installed by him immediately upon delivery and advise the facility operator through its authorized representative, of all damaged materials. The Contractor at no additional costs to the City or the facility operator shall replace any material that is damaged or lost after the Contractor's inspection.

11. Liability And Insurance:

Notwithstanding the provisions of this contract, the existing division of liabilities to third parties shall remain the same as between the City and the company. Therefore, it is specifically agreed by the City, company and Contractor (by bidding on this contract) that for the purpose of any liabilities to third parties, that the City contractor performing work directly and physically relating to gas company facilities in this project, shall be deemed an agent of the company and not an agent of the City, the New York City Municipal Water Finance Authority, or the New York City Water Board. Contractor shall include the company as an additional insured on all insurance policies maintained to comply with the City's insurance requirements.

12. Width And Depth Of Excavation:

Contractor shall not be authorized to deliberately change trench or excavation widths and/or depth specified without Engineer's approval. Enlargement of any side of excavation up to eighteen (18) inches beyond pay limits (or inside face of sheeting) requested by the Contractor for the installation of certain types of sheeting may be granted. However, such enlargements or those greater than allowable shall not be approved when, in the sole judgment of the City, field conditions allow the water mains and sewer work to be performed within the limits specified and, the sole purpose of such enlargement request is to impact adjacent utilities (public or private) whose support and protection are part of this contract. Any approval shall be given at no additional cost to the City contract, including EP-7 funding, and all costs associated with unauthorized enlargements shall be the sole responsibility of the Contractor.

13. Depth And Crossing Angles Of Gas Facilities:

Where gas facilities are shown (or specified as) crossing proposed alignment of sewers, water mains, catch basins and chute connections or any other proposed excavations at specific angles (as measured off plans or sketches or specified in contract), it shall be understood that actual field measurements may deviate (plus or minus) forty-five (45) degrees from those shown or specified. The cover, or depth from street surface to top of facilities, shall be as shown or specified in contract documents, no deviation is to be assumed. Where gas facilities are not shown on contract documents, but their support and protection are otherwise included in this contract then, all references to facilities crossing at "various angles and depth" in the gas sections shall mean that such facilities are crossing sewer, water, catch basin and, catch basin chute, and other excavations at a ninety (90) degree angle to the proposed sheeting line or side of

excavation (for unsheeted trenches) with an allowable deviation of forty-five (45) degrees in any direction, except for catch basin chute excavation where the allowable deviation shall be sixty (60) degrees. Where the cover is not noted or specified, the bottom face of such facilities shall be assumed to be crossing catch basin chutes at a depth of three (3) foot eight (8) inches or less from the street surface. Paragraph No. 2 above shall apply in cases of distribution water main construction. Appropriate bid items and specifications are provided for cases where angle and depth are greater than stated above. This section also applies to work defined in "Emergency Reconstruction Contracts" or so-called "Where and When Contracts". These contracts are not pre-engineered and consequently have no drawings, sketches or determined locations and so, gas facilities encountered will be crossing existing and proposed sewer, water, catch basin/catch basin chutes and all appurtenances at various angles and depths.

14. Maintenance Of Traffic For Gas Work:

All work pertaining to gas bid items and specifications shall be performed within the contract maintenance of traffic plan as specified in the contract document. The bid price for the Maintenance and Protection of Traffic shall cover all work pertaining to gas items. The City shall make compensation for additional maintenance and protection of traffic items in connection with gas item of work only when such additional work is deemed reasonable and necessary by the Resident Engineer and is approved by him prior to its performance.

15. Relocated Gas And Temporary Systems Installation:

In cases where the Contractor is allowed to select the location for temporary construction such as, installation of dewatering headers, wells, well points, etc., he shall not disturb any gas facilities shown on sketches provided in this section. The only exception shall be, if the affected gas company agrees to such relocation and provided that the cost of such relocation is a matter of adjustment between the company and Contractor, and at no cost to the City.

16. Role Of Company Inspector:

In any case in which the City elects to perform some or all support and protection work with its own employees, personnel or contractors, the facility operator shall provide onsite inspectors to approve and certify such support and protection work (exclusive of City accommodations) performed by the City's own employees, personnel, and contractors. Facility operator's inspectors are not authorized to direct City contractor during the performance of contract work. They shall act through the City Resident Engineer and provide him/her required approvals and certifications, prior to preparing partial payments of EP-7 items, in a format and frequency to be prescribed by the appropriate City Head of Construction.

17. Coordination With Gas Company:

The Contractor shall be required to notify the gas company(ies), in writing, at least two (2) weeks prior to the start of final paving in order to allow companies to complete any unfinished gas work located within the area to be paved. Every effort shall be made to maintain gas service with minimum inconvenience to the public.

III - TECHNICAL SECTION

SECTION 6.01 - Trench Crossings; Support And Protection Of Gas Facilities And Services.

1. Description:

Under this section, the Contractor shall provide all labor, materials, equipment, and incidentals required to

support and/or protect the integrity of gas mains, services and appurtenances of any sizes, configurations, and operating pressures crossing trench excavations above subgrade for planned construction of sewers and water mains facilities. A gas service shall be defined as a gas pipe of three (3) inches in diameter or less branching from the main to a customer pick up point or property valve box. A gas main may be any size pipe that is part of a distribution or transmission network other than services described above. Crossings shall be defined as gas facilities spanning the width of excavation (one side to the other side). These crossings may be at various angles and depth as shown on "Gas Cost Sharing Work Standard Sketches Nos. 1 and 1A", and as specified in "General Provisions; Gas Cost Sharing Work Paragraph No. 13" and, at the locations shown or listed in contract documents. The gas company operating in the area, (facility operator), owns these facilities. The work shall be performed in accordance with contract specifications, plans, and at the directions of the Resident Engineer in consultation with the authorized representatives of the facility operator.

2. Method Of Construction:

A. Protection: In general, the gas facilities shall be protected as required by New York State Industrial Code 753. In particular, the Contractor shall use hand excavation methods (pick and shovel or hand held power tools) directly below the pavement base to expose the gas facilities (marked out by facility operators) and to ascertain the clearances and cover of the facilities with respect to the proposed excavation. Upon exposing the affected facilities sufficiently, at the discretion of the Resident Engineer, to ascertain the foregoing, Contractor shall be permitted to proceed with a combination of hand and machine excavation, as appropriate, outside a zone of protection whose limit shall be defined as a perimeter located twelve (12) inches from the outside face of each gas facility crossings (See "Gas Cost Sharing Work Standard Sketch No. 2"). If the facilities are in direct interference with City work, meaning that "Minimum Clearances" described in "General Provisions; Gas Cost Sharing Work Paragraph No. 8" cannot be maintained, and excavation has to be temporarily or permanently abandoned then this particular location shall become a test pit and dealt with as specified in Section 6.07, and "General Provisions; Gas Cost Sharing Work Paragraphs Nos. 2 and 8".

B. Support: Gas mains or services crossing excavations equal or less than four (4) feet wide are generally self supporting, unless field conditions as determined by the Resident Engineer require otherwise. The support requirements for gas mains and services crossing excavations greater than four (4) feet wide shall be as shown on the attached "Gas Cost Sharing Work Standard Sketch No. 1" and Contractor shall use sheeting methods that permit the maintenance of gas facilities in their existing locations and configurations. Alternate methods equivalent to those shown on the sketch or accommodations by the facility operator proposed by the Contractor in order to facilitate the execution of the specified work shall be allowable, provided that prior approval is obtained by the Contractor from the Engineer and the facility operator. The support and protection of gas facilities crossings shown on plans, drawings, listings or otherwise identified in this contract shall not be circumvented with the issuance of so called "order outs".

3. Method Of Measurement:

The Contractor shall be paid for supporting and/or protecting gas facilities crossing trench excavations under the appropriate bid items covered by this section. The Contractor shall be directly responsible to the facility operator for the total cost of using any alternate method requiring the use of resources owned by the facility operator. Regardless of the method used, the City shall pay the bid price for the appropriate support and/or protect item of work. The average rate charged by the facility operator for alternate support and protection work such as, disconnecting and reconnecting gas services is listed in attached "Schedule GCS-A".

4. Payment Restrictions:

These items shall not be paid for: gas services crossing unsheeted water main trench excavation; abandoned gas main/services identified by facility operator; gas mains/services crossing trench excavations for fire hydrant branch connections pipes, catch basins and/or chutes (sewer drain pipe), house sewer and/or water services; gas facilities encroaching any face of excavation for sewer and/or

water construction, all of which are covered under other contract sections. Also this item shall not be paid for new gas mains and services crossing water trenches when trenching for such new facilities has been performed by the Contractor in common with trench excavation for City work (overlapping trench limits). The cost of supporting and protecting such gas facilities crossings shall be deemed included in the cost of trench excavation for the new gas facilities. This payment restriction shall apply even if such common trench gas excavation is not part of the contract. The prices bid for items covered by this section represent full compensation to Contractor to completely perform the work described. No other bid items shall be combined with these items in order to pay for gas main and/or services crossing excavations specified herein.

5. Method Of Payment:

Each (Ea.) gas facility crossing trench excavation as described in these specifications shall be counted for payment.

6. Price To Cover:

The cost of timber/steel supports installed for gas facilities shall be included in the bid price. The bid price for each crossing shall also cover all additional supervision, labor, material (except those provided by the facility operator), equipment and insurance necessary to completely maintain the gas facilities without disruption of service to the customers and in accordance with contract plans, specifications and facility operator standards. The price shall also include: changes of method of operations; sheeting modifications where necessary to accommodate the gas facilities crossings; installation and removal of water pipe under gas facilities (so called "snaking"); extra care during excavation (including hand excavation under existing single and multiple gas facilities); extra backfilling and compaction around, over and under gas facilities; installation and removal of sheeting around gas facilities; associated maintenance and protection of traffic; barricades; and traffic plates that may be required to temporarily close and/or complete the work.

SECTION 6.02 - Extra Excavation For The Installation Of Catch Basin Sewer Drain Pipes With Gas Interferences.

1. Description:

Under this item, the Contractor shall provide all labor, materials, equipment, insurance, and incidentals for the extra excavation associated with the installation of catch basin sewer drain pipes (chute) under gas facilities of various sizes crossing the trench excavation at various angles and depth at the locations shown in the contract documents and also, for the support and protection of these facilities during associated excavation and backfill operations. The gas company operating in the area, (facility operator), owns these facilities.

2. Method Of Measurement:

The bid price shall be per location (Each) where extra excavation is required when catch basin sewer drain pipes are installed at an upstream invert depth lower than four (4) feet (up to a maximum of six (6) feet) from the proposed pavement grade because the bottom faces of interfering gas mains and appurtenances are located at a depth greater than three (3) foot eight (8) inches from proposed pavement surface (See “Gas Cost Sharing Work Standard Sketch No. 4”).

3. Method Of Construction:

Incremental cost responsibility for chute excavation is determined by the first private facility encountered starting from catch basin structure proper and that prevents the installation of the chute connection at an upstream cover less than or equal to three (3) feet or any other minimum cover required to avoid City facilities (e.g. water, sewer, etc.) as directed by the Resident Engineer.

4. Payment Restrictions:

This item shall not apply and related bid item shall not be paid in cases where:

A. Upstream invert chute is more than six (6) feet deep because of gas facilities.

B. Chute cannot be installed above existing gas facilities because of interferences with other private facilities that are not otherwise covered under this contract, regardless of upstream invert depth.

The above cases shall be at no cost to the City, but shall be a matter of adjustment between the Contractor and the facility operator(s).

5. Price To Cover:

The bid price shall cover the additional cost of all additional supervision, labor, materials, equipment and insurance, to complete the installation of catch basins and associated sewer connections in accordance with the contract plans and specifications. The price shall include: excavation by hand around and under single and multiple gas facilities; locating, supporting and protecting gas facilities; backfilling and all other items necessary to perform all work incidental thereto including: installation and removal of drain pipe under gas facilities ("snaking"); widening of trenches to facilitate the above work; subsequent additional backfill and pavement restoration; modifying precast catch basin window to accommodate connection; changing sheeting method and configuration to accommodate gas facility crossings; maintenance and protection of traffic; barricades; and installation of traffic plates that may be required to temporarily close and/or complete the work. The price shall not include removal of ledge rock and/or excavation of boulders in open cut.

SECTION 6.02.1 - Extra Excavation For The Installation Of Catch Basin Sewer Drain Pipes With Upstream Inverts Greater Than Six (6) Feet.

1. Description:

Under this item, the Contractor shall provide all labor, materials, equipment, insurance and incidentals for the extra excavation of catch basin chutes where the upstream invert is greater than six (6) feet under gas facilities of various sizes crossing the trench excavation at various angles and depth at the locations shown in the contract documents or as determined by field conditions and also, for the support and protection of these facilities during the associated excavation, sheeting and backfilling operations.

2. Method Of Measurement:

The bid price shall be per location (Each) where extra excavation and sheeting is required when the catch basin chute installed at an upstream invert depth lower than six (6) feet from the proposed pavement grade because the bottom faces of the interfering gas mains and appurtenances are located at a greater depth than three foot eight inches from the proposed pavement surface only.

3. Method Of Construction:

Incremental cost responsibility for chute excavation is determined by the first private facility encountered during such excavation when initiated from catch basin structure and that prevents the installation of the chute at an upstream cover less than or equal to three (3) feet or any other cover required to avoid City facilities as directed by the Resident Engineer.

4. Payment Restriction:

This item shall not apply and related bid item shall not be paid in cases where:
Upstream invert chute is less than or equal to six (6) feet deep because of gas facilities. Section 6.02 shall be paid.

5. Price To Cover:

The bid price shall cover the additional cost of all supervision, labor, materials, equipment and insurance to complete the installation of catch basin and associated sewer connections in accordance with the contract plans and specifications. The price shall include: excavation by hand around and under single and multiple gas facilities; locating, supporting and protecting gas facilities incidental thereto; widening of trenches to facilitate the above work; subsequent additional backfilling and pavement restoration; modifying pre-cast basin window to accommodate connection; the installation of catch basin with deeper sumps as specified; additional sheeting and changes in sheeting method and configuration to accommodate gas facility crossings; maintenance and protection of traffic; barricades; and installation of traffic plates that may be required to temporarily close and/or complete the work.

SECTION 6.03 - Removal Of Abandoned Gas Facilities. All Sizes.

1. Description:

Under this section the Contractor shall provide all labor, materials, equipment, insurance and, incidentals required for the removal of abandoned gas mains, services, or appurtenances thereof, located within the street shown on the contract plans, owned by gas company operating in the project area (facility operator), used or to be used for or in connection with or to facilitate the conveying, transportation, distribution or furnishing of gas (natural or manufactured or mixture of both) for light, heat, or power, but does not include property used solely for or in connection with business of selling, distributing or furnishing of gas in enclosed containers. Such removal shall include only abandoned gas facilities that interfere with (i.e. cause additional work) City work.

2. Determination Of Operating Status Of Gas Facilities:

The Contractor shall notify facility operator, as required by New York State Industrial Code 753. Gas facilities shall not be removed without the approval of the facility operator whose authorized representative shall certify in writing (specific facility or area wide facilities certification) and in a timely manner acceptable to the Resident Engineer that abandoned facilities are free of combustible gas and any other environmental contaminants prior to removal. The Resident Engineer shall rely on facility operator's certification. The facility operator may request the excavation of test pits (See Section 6.07) for this determination ahead of City work and, Contractor shall provide safe access, facilitate and permit facility operator to enter test pit excavations for the purpose of testing gas facilities to be removed by the Contractor. However, facility operator may prefer to make this test during performance of City work, in order to issue the above certification. This shall be permitted provided that it is agreed that additional costs, if any resulting from this choice shall be a matter of adjustment between the Contractor and facility operator only, and at no cost to the City.

3. Restrictions:

The facility operator shall be solely responsible for its contaminated gas facilities, surrounding contaminated soil and their disposal and abatement procedures, unless contract bid items are applicable and provided for such work. In such cases, the quantity removed shall be charged to EP-7 bid item "UTL- GCS-2WS - GAS INTERFERENCES AND ACCOMMODATIONS" at the City bid prices.

4. Method Of Measurement:

Abandoned gas pipeline removal shall be measured for payment per linear foot of pipe and appurtenances removed.

5. Price To Cover:

The price shall cover all additional cost of supervision, labor, materials, equipment, and insurance necessary to complete this work in accordance with the contract plans and specifications, including excavation by hand around and under other City and facility operator owned properties and, where necessary, support and protection of such properties. The price shall also cover breaking, cutting, and/or burning of abandoned gas pipes and their disposal from the site; sealing open ends remaining in the excavation with concrete or caps (caps to be provided by the facility operator) and backfilling of the area where the pipeline has been removed with clean backfill. The price shall also include any required dump charges. This item does not include any type of extra excavation, backfilling, compaction, pavement removal and restoration associated with abandoned gas facilities removal, all of which are covered under Section 6.06.

SECTION 6.03.1 - Removal Of Abandoned Gas Facilities With Possible Coal Tar Wrap. All Sizes. (For National Grid Work Only)

1. Description:

Under this section the Contractor shall provide all labor, materials, equipment, insurance and, incidentals required for the removal of abandoned gas mains, services or appurtenances thereof, located within the street shown on the contract plans, owned by the gas company operating in the project area (facility operator), used or to be used for or in connection with or to facilitate the conveying, transportation, distribution or furnishing of gas (natural or manufactured or mixture of both) for light, heat, or power, but does not include property used solely for or in connection with business of selling, distributing or furnishing of gas in enclosed containers. Such removal shall include only abandoned gas facilities that interfere with (i.e. cause additional work) City work. These gas facilities may be coated with Coal Tar Wrap and so, may require special handling and disposal methods as specified in National Grid Standard Operating Procedure 12-2, Coal Tar Wrap Handling and 12NYCRR56.

2. Determination Of Operating Status Of Gas Facilities:

The Contractor shall notify facility operator, as required by New York State Industrial Code 753. Gas facilities shall not be removed without the approval of the facility operator whose authorized representative shall certify in writing (specific facility or area wide facilities certification) and in a timely manner acceptable to the Resident Engineer that abandoned facilities are free of combustible gas and any other environmental contaminants prior to removal. The Resident Engineer shall rely on the facility operator's certification. The facility operator may request the excavation of test pits (See Section 6.07) for this determination ahead of City work and, the Contractor shall provide safe access, facilitate and permit facility operator to enter test pit excavations for the purpose of testing gas facilities to be removed by the Contractor. However, the facility operator may prefer to make this test during performance of City work, in order to issue the above certification. This shall be permitted provided that it is agreed that additional costs, if any, resulting from this choice shall be a matter of adjustment between the Contractor and the facility operator only, and at no cost to the City contract. Should such investigation result in the determination that the abandoned gas facilities do not contain Coal Tar Wrap then the removal of said facilities shall be covered under separate item (See Section 6.03).

3. Requirements:

The City Contractor shall excavate abandoned gas facility sufficiently, either in its entirety, or at locations determined by Contractor to allow the removal of Coal Tar Wrap (if present on the abandoned gas facility) and to facilitate the safe extraction of manageable lengths of abandoned pipe without damage to adjacent facilities, utilities or City structures either parallel to or crossing above or below abandoned gas facility. The Contractor is to allow access to the designated cutting points within the Contractor's trench by authorized National Grid personnel who will remove the Coal Tar Wrap as per National Grid procedures. This work by National Grid personnel shall be performed in a timely fashion and shall not unduly impede

the Contractor's progress and/or productivity. Upon completion of the coating removal, the Contractor shall be allowed to cut, burn or grind the gas facility and remove the section of abandoned pipe. The Contractor at a site designated by the Contractor shall stockpile the removed pipe. The facility operator will be responsible to provide trucking and disposal services with its own personnel and shall remove the stockpiled pipes during off hours or during such time as agreed to by the Contractor. Since the pipe removed will remain the property of the facility operator and is to be disposed of by the facility operator, the facility operator shall be responsible for any required notifications, filings, dump charges and incidentals associated with the disposal of abandoned gas facilities found to contain Coal Tar Wrap.

4. Method Of Measurement:

Abandoned gas pipeline removal shall be measured for payment per linear foot of pipe and appurtenances removed.

5. Price To Cover:

The price shall cover all additional cost of supervision, labor, materials, equipment and insurance necessary to complete this work in accordance with the contract plans and specifications, including excavation by hand around and under other City and facility operator owned properties and, where necessary, the support and protection of such properties. The cost shall also include hand excavation in the area(s) of proposed abandoned pipe cut(s), cutting and/or burning of abandoned gas pipes and stockpile of removed sections of abandoned pipe and associated maintenance and protection of traffic, blocking and temporary fencing if required. The unit price shall also cover sealing open ends remaining in the excavation with concrete or end caps (end caps to be provided by the facility operator) and backfilling of the area where the abandoned pipeline has been removed with clean backfill material. This item does not include any type of extra excavation, backfilling, compaction, pavement removal and/or restoration (temporary and permanent) associated with abandoned pipe removal ("lost trench"), all of which are covered under separate Section 6.06. The price shall also include allowance for any loss of productivity by the Contractor due to required facility operator work to remove pipe coating and prepare pipe for cutting as well as any change in Contractor's excavation method, additional trucking and/or stockpiling costs.

SECTION 6.03.1a - Removal Of Abandoned Gas Facilities With Possible Coal Tar Wrap. All Sizes. (For Con Edison Work Only)

1. Description:

Under this section the Contractor shall provide all labor, material, equipment, insurance and, incidentals required to prepare abandoned gas mains, services and appurtenances thereof located within the street shown on contract plans, owned by the gas company operating in the project area (facility operator), for removal due to interference with proposed City work. These abandoned gas facilities were, at one time, used for or in connection with or to facilitate the conveying, transportation, distribution or furnishing of gas (natural, manufactured or a combination of both) for light, heat, or power, but does not include property used solely for or in connection with business of selling, distribution or furnishing of gas in enclosed containers. Such preparation for removal shall include only abandoned gas facilities that interfere with (i.e. cause additional work) City work. These gas facilities may be coated with Coal Tar Wrap which may contain asbestos or PCB's and so, may require special handling and disposal methods as specified in Con Edison - ASBESTOS MANAGEMENT MANUAL, CHAPTER 6 - ASBESTOS WORK PROCEDURES, SECTION 06.04 - COAL TAR WRAP REMOVAL. For under 25' (feet) in length and an approved NYC-DEP variance for over 25' (feet).

2. Determination Of Operating Status Of Gas Facilities:

The Contractor shall notify facility operator, as required by New York State Industrial Code 753. Gas Facilities shall not be removed without the approval of the facility operator whose authorized representative shall certify in writing (specific facility or area wide facilities certification) and in a timely

manner acceptable to the Resident Engineer that abandoned facilities are free of combustible gas and any other environmental contaminants prior to removal. The Resident Engineer shall rely on the facility operator's certification. The facility operator may request the excavation of test pits (See Section 6.07) for this determination ahead of City work and Contractor shall provide safe access, facilitate and permit facility operator to enter test pit excavations for the purpose of testing gas facilities. However, the facility operator may prefer to make this test during performance of City work in order to issue the above certification. This shall be permitted provided that it is agreed that additional costs, if any, resulting from this choice shall be a matter of adjustment between the Contractor and the facility operator only, and at no cost the City contract. Should such investigation result in the determination that the abandoned gas facilities do not contain Coal Tar Warp then the removal of said facilities shall be covered under separate item (See Section 6.03).

3. Requirements:

The Contractor shall excavate abandoned gas facility sufficiently, either in it's entirety, or at locations determined by Contractor to allow the removal of Coal Tar Wrap (if present on the abandoned gas facility) and to facilitate the safe extraction of manageable lengths of abandoned pipe without damage to adjacent facilities, utilities or city structures either parallel to or crossing above or below abandoned gas facility. The Contractor is to allow access to the designated cutting points within the Contractors trench by authorized Con Edison personnel who will remove the Coal Tar Wrap as per Con Edison and/or NYC-DEP approved procedures. This access shall conform to all applicable codes, rules & regulations. This work by Con Edison personnel shall be performed in a timely fashion and shall not unduly impede the Contractors progress and/or productivity. Upon completion of the coating removal, the Contractor shall be allowed to cut, burn or grind the gas facility and remove the section of abandoned pipe. Contractor shall designate a specific site to stockpile those removed pipes. The facility operator will be responsible to provide trucking and disposal services with its own personnel and shall remove the stockpiled pipes during off hours or during such time as agreed to by the Contractor. Since the pipe removed will remain the property of the facility operator and is to be disposed of by the facility operator, the facility operator shall be responsible for any required notifications, filings, dump charges and incidentals associated with the disposal of abandoned gas facilities found to contain Coal Tar Wrap.

4. Method Of Measurement:

Abandoned gas facility removal shall be measured for payment per linear foot of pipe and appurtenances removed.

5. Price To Cover:

The price shall cover all additional cost of supervision, labor, materials, equipment and insurance necessary to complete this work in accordance with the plans and specifications, including, but not limited to, excavation by hand around and under other City and facility operator owned properties and, where necessary, the support and protection of such properties. The cost shall also include hand excavation in the area(s) of proposed abandoned pipe cut(s), cutting and/or burning of abandoned gas pipes and stockpile of removed sections of abandoned pipe and associated maintenance of traffic, blocking and temporary fencing if required. The unit price shall also cover sealing open ends remaining in the excavation with concrete or end caps (end caps to be supplied by facility operator) and backfilling of the area where the abandoned pipeline has been removed with clean backfill material. This item does not include any type of extra excavation, backfilling, compaction, pavement removal and/or restoration (temporary and permanent) associated with abandoned pipe removal ("lost trench"), all of which are covered under separate Section 6.06. The price shall also include allowance for any loss of productivity by the Contractor due to required facility operator work to remove pipe coating and prepare pipe for cutting as well as any change in Contractor excavation method, additional trucking and/or stockpiling costs.

SECTION 6.04 - Adjust Hardware To Grade Using Spacer Rings/Adaptors. (Street Repaving.)

1. Description:

Under this section, the Contractor shall provide all labor, supervision, materials, equipment, insurance and incidentals required to adjust to final grade gas street surface hardware located within the contract area boundaries shown on the plans. The gas company operating in the area, (facility operator), owns these facilities. The work shall be performed in accordance with the contract plans, specifications and at the directions of the Resident Engineer in concurrence with authorized representative of the facility operator.

2. Materials:

The facility operator shall furnish and deliver all prefabricated hardware parts required. These include adaptors for the grade adjustment proper and new street hardware if existing ones are found to be defective, all in accordance with the facility operator standards and City rules and regulations. The Contractor shall notify the facility operator of the installation schedule at least three (3) business days before materials are required on the site. Should the facility operator fail to deliver the necessary material according to any schedule mutually agreed upon by the Contractor and facility operator, the City shall not be responsible for any delays attributable thereto, nor for the failure of delivery of such materials. On project where material storage is not permitted on site, the facility operator shall deliver the required material to the Contractor's yard and it shall be the Contractor's responsibility to transport the material to the work site when needed for installation. It shall also be the Contractor's responsibility to inspect the materials to be installed by him immediately upon delivery and advise the facility operator through its authorized representative, of all damaged materials. The Contractor at no additional expense to the City or the facility operator shall replace any material that is damaged or lost after the Contractor's inspection.

3. Method Of Measurement:

The Contractor shall be paid for each six (6) inch round box and/or nine (9) inch square box adjusted to grade regardless of adjustment height requirements.

4. Price To Cover:

The unit price bid for this item shall include all additional labor, supervision, insurance, equipment and, material (except those to be provided by the facility operator), required to adjust each box to grade as required in the contract plans and specifications. The bid price shall also include the removal of existing frames and covers from existing facilities to be salvaged and returned to the facility operator and, all material transportation from the Contractor's material storage yard to the work site. In addition the bid price shall include "chipping" around existing box using appropriate means and methods where grinding is required.

SECTION 6.05 - Adjust Hardware To Grade By Resetting. (Road Reconstruction.)

1. Description:

Under this item, the Contractor shall provide all labor, supervision, materials, equipment, insurance and incidentals required to adjust to the proposed grade gas street surface hardware located within the contract area boundaries shown on the plans. The gas company operating in the area, (facility operator), owns these facilities. The work shall consist of either building up or lowering or resetting the casting by removing the existing frame and cover building up or decreasing the existing installation, replacing the frame and/or cover if damaged or worn out, as determined by the Resident Engineer, with a new frame and/or cover furnished by the owner, and setting the frame and cover to new elevation. The work shall be performed in

accordance with the contract plans, specifications and at the directions of the Resident Engineer.

2. Materials:

The facility operator shall furnish and deliver all new hardware parts required. The Contractor shall furnish materials such as mortar, bricks and concrete in compliance with contract requirements. At locations where high-early strength concrete is required under this contract to be placed adjacent to gas facilities, then the requirement for concrete shall be high-early strength complying with the current New York State Department of Transportation, Standard Specifications for Class F concrete. Existing castings may be replaced as required and deemed necessary by the Engineer and by City rules and regulations. The Contractor shall install the new castings of various sizes furnished by the facility operator. The Contractor shall notify the facility operator of the installation schedule at least three (3) business days before materials are required on the site and, shall provide off-loading services to the facility operator. Should the facility operator fail to deliver the necessary material according to any schedule mutually agreed upon by the Contractor and facility operator, the City shall not be responsible for any delays attributable thereto, nor for the failure of delivery of such materials. Such delays shall be a matter of adjustment between the Contractor and the facility operator. On project where material storage is not permitted on site, the facility operator shall deliver the required material to the Contractor's yard and it shall be the Contractor's responsibility to transport the material to the work site when needed for installation. It shall also be the Contractor's responsibility to inspect the materials to be installed by him, immediately upon delivery and advise the facility operator through its authorized representative, of all damaged materials. The Contractor at no additional expense to the City or the facility operator shall replace any material that is damaged or lost after the Contractor's inspection.

3. Methods Of Construction:

The Contractor shall remove and reinstall existing castings or install new castings to the proposed grade. Setting and resetting the castings shall be done with mortar and brick according to the standards of the facility operator. Work shall be performed in a workmanlike manner. Castings that are deemed unacceptable for resetting shall remain the property of the facility operator and he shall be responsible for their removal and proper disposal from site. No traffic shall be allowed on adjusted street hardware until permitted by the Engineer.

4. Method Of Measurement:

The Contractor shall be paid for each gas hardware adjusted to grade regardless of size or adjustment height requirements (up or down).

5. Price To Cover:

The unit price bid for this item shall include all additional labor, supervision, insurance, equipment and, material (except those to be provided by the facility operator), required to adjust each gas hardware to grade as required in the contract plans and specifications. The bid price shall also include the removal of existing frames and covers from existing facilities; building up the existing installations with bricks and mortar, or lowering the existing installation by removing bricks and mortar; replacing damaged frames and/or covers with new frames and/or covers furnished by the facility operator; setting the frames and covers to the new elevations; protect existing installations; repair minor structural damages to existing installations prior to resetting frames; unloading of furnished castings at the Contractor's yard and transporting castings from the Contractor's yard to the job site as required; completing the work in accordance with the contract plans, specifications and, at the directions of the Engineer. In addition the bid price shall include "chipping" around existing gas facilities using appropriate means and methods where grinding is required.

SECTION 6.06 - Special Care Excavation And Backfilling.

1. Description:

Under this section, the Contractor shall provide all labor, materials, equipment, insurance and incidentals required to support and protect the integrity of live gas facilities including mains, services, related structures and appurtenances during excavations. The gas company operating in the area, (facility operator), owns these facilities. The work shall be performed in accordance with the contract plans, specifications and at the directions of the Resident Engineer in consultation with authorized representatives of the facility operator.

2. Applicability Of Section:

This section shall apply to live gas facilities of various sizes located within two (2) feet of any face of unsheeted excavation, (unsheeted excavation refers to any excavation performed for city work and includes excavations performed that are to be subsequently sheeted using approved methods) and paralleling or, encroaching any face of excavation. Also, for crossings greater than forty-five (45) degrees and/or located at a cover depth greater than five (5) feet from existing street surface. Parallel facilities are not exposed at any time during excavation (See "Gas Cost Sharing Work Standard Sketch No. 5"). Encroaching facilities are partially exposed inside the limit of excavation (See "Gas Cost Sharing Work Standard Sketch No. 5"). This section shall also apply to gas facilities crossing catch basins excavation, and catch basins sewer connections (chutes) trench excavation only when extra depth (covered in other section), is not required for chutes installations because of such utilities interferences (See "Gas Cost Sharing Work Standard Sketch No. 3"). This section shall also apply to gas services (if shown or otherwise listed in contract documents) crossing unsheeted excavations for water mains, gas facilities crossing fire hydrant branch connections, house sewer and/or water service connections excavations. This section shall also apply for so called "loss trench", as described further, and for additional excavation (pavement and/or soil), backfilling, compaction, roadway base and pavement restoration due to abandoned gas facilities, only if removed by Contractor. If operating status of gas facilities cannot be determined prior to excavation then such facilities shall be considered live and this section shall fully apply. The excavation around fully exposed live gas facilities along and within limits of excavation (not crossings) shall be covered by this section also (not shown on "Gas Cost Sharing Work Standard Sketch No. 5"), however the support requirement, if any is required, of such facilities is beyond the scope of these specifications and therefore shall be the responsibility of facility operator to determine and prescribe, at no cost to the City contract, but shall be a matter of adjustment between the Contractor and facility operator.

3. Payment Restriction:

No special care excavation shall be paid for abandoned gas facilities paralleling and/or encroaching excavation and therefore are not in direct interference with City work. Except as allowed in this section, the bid item specified under this section shall not be used in combination with items covered under other sections for work done due to a particular gas facility. This item shall not be paid for new gas facilities when trenching for such new facilities has been performed by the Contractor of record in common with trench excavation for City Work (overlapping trench limits). The cost of excavating with care as defined in this section shall be deemed included in the cost of trench excavation for the new gas facilities. This restriction shall apply even if such gas common trench excavation is not part of the contract. If facilities are in direct interference with City work, meaning that "Minimum Clearances" described in "General Provisions; Gas Cost Sharing Work Paragraph No. 8" cannot be maintained and excavation has to be temporarily or permanently abandoned then this particular location shall become a test pit and dealt with as specified in Section 6.07 and "General Provisions; Gas Cost Sharing Work Paragraphs Nos. 2 and 8".

4. Method Of Construction:

All excavation in the vicinity of gas facilities shall be as required by NYS Industrial Code 753. Where these facilities are paralleling and located two (2) feet or less from the limits of the proposed excavation, the Contractor shall use hand excavation methods (pick and shovel or hand held power tools) to ascertain the clearances of these facilities with respect to the proposed excavation. Once the location of these

facilities with respect to the proposed excavation is verified to the satisfaction of the Resident Engineer, the Contractor shall then proceed with a combination of hand and machine excavation as required preserving the integrity of the facilities. The installation of timber supports or underpinning, when soil foundation cannot fully support partially exposed pipes, may be required to prevent pipe movement as directed by the Resident Engineer.

5. Method Of Payment:

The unit price for this work item shall be based on cubic yard (CY) of average excavation with care and, is to be considered as an incremental cost for performing City work with gas facilities interferences.

6. Method Of Measurement:

A. For Paralleling Facilities: Volume calculated as: Depth as measured from existing street surface to the bottom of unsheeted trench excavation allowable by OSHA regulations, multiplied by, the width measured as one (1) foot from the face of excavation toward the center of excavation, multiplied by the length of parallel facility, divided by twenty-seven (27) cubic feet per cubic yard (See “Gas Cost Sharing Work Standard Sketch No. 5”). The gas facility is no longer considered to be in interference once sheeting has been installed, therefore no further compensation for paralleling facilities as described above will be made.

B. For Encroaching Facilities: Volume calculated as: Depth of trench as allowable by OSHA, maximum up to five (5) feet multiplied by, the width of partially exposed pipe plus one (1) foot, multiplied by the length of facility encroachment, divided by twenty-seven (27) cubic feet per cubic yard (See “Gas Cost Sharing Work Standard Sketch No. 5”).

C. Fully Exposed Gas Facilities: (Not shown on “Gas Cost Sharing Work Standard Sketch No. 5”) along and inside trench and/or crossing trench at an angle greater than forty-five (45) degrees and/or a cover depth greater than five (5) feet from the existing street surface. The volume shall be measured as the depth of trench excavation multiplied by the distance measured along the sheeting line between two (2) points of intersections of the gas facilities and the sides of trench excavation, multiplied by the width of trench excavation.

D. For Additional Excavation And Restoration Due To So Called "Loss Trench", When The Integrity Of Pavement And Soil Above And Around Existing Live Gas Facilities Cannot Be Maintained Due To Its Lack Of Cohesiveness: Volume shall be calculated as: Depth of unsheeted trench excavation multiplied by width measured as distance of facility from closest edge of unsheeted excavation plus, width of facility proper plus, one (1) foot or a maximum width of three (3) feet multiplied by length of facility fully exposed divided by, twenty-seven (27) cubic feet per cubic yard (not shown on “Gas Cost Sharing Work Standard Sketch No. 5”).

E. For Facilities Crossing Excavation For Catch Basins, Or Chutes Installations (When NYCDEP Funded) Or Fire Hydrant Branch Connections, Or Unsheeted Water Main Trench, Or House Sewer And/Or Water Services: Volume calculated as: Depth as measured from existing street surface to the bottom of the trench excavation multiplied by, the width taken as the outside diameter of pipe or the width of structure plus one (1) foot on either side (two (2) feet), multiplied by, the length of exposed facility crossing the trench, divided by twenty-seven (27) cubic feet per cubic yard (not shown on “Gas Cost Sharing Work Standard Sketch No. 5”).

Overlapping volume dimensions measured as described above may occur when multiple facilities are paralleling excavations, encroaching excavations or crossing catch basins and catch basin chute installations. In such cases, all such facilities shall be counted as one limited by the extreme pipes, faces (See “Gas Cost Sharing Work Standard Sketch No. 2”). The volume shall then be calculated as described above.

7. Price To Cover:

The bid price shall also cover all additional supervision, labor, material, equipment and insurance necessary to excavate while protecting and maintaining (excluding supports for fully exposed live gas) gas facilities without disruption of service to the public and in accordance with contract specifications. The price shall also include, changes of sheeting method and excavation width configuration where necessary to accommodate gas facilities in their existing locations; difficulties during the installation of catch basins, chute connections, hydrant branch, and house sewer and water connections under or over gas facilities; loss of productivity due to slower rate of excavation (special care) during excavation, including the use of such methods as: hand excavation around existing single and multiple facilities, extra excavation and backfilling due to lost trench because of existing and adjacent gas facilities, compaction, removal of sheeting from the facilities, extra roadway base restoration and temporary pavement, associated maintenance and protection of traffic, barricades, and traffic plates that may be required to temporarily close and/or complete the work.

SECTION 6.07 - Test Pits For Gas Facilities.

1. Description:

Under this section, the Contractor shall furnish all labor, materials, insurance, equipment and appliances necessary to excavate, sheet and, maintain test pits at locations approved by the Resident Engineer in consultation with the facility operator. Test pits shall be dug in order to ascertain exact locations, cover and invert elevations, clearances, alignment and operating status (live or dead) of existing gas facilities. The Contractor shall inspect jointly with the Resident Engineer and facility operator, gas facilities and other structures uncovered, take all relevant measurements and elevations as directed by the Resident Engineer. Tests to determine operating status of gas facilities shall be performed by facility operator. The pits shall be covered with steel plates during daytime nonworking hours, and uncovered, as required, until the inspection work is completed. Testing of gas facilities may require a maximum of four (4) hours. Then, the pits shall be backfilled with clean fill, and resurfaced with temporary pavement. All traffic shall be maintained and all safety measures as stipulated shall be complied with.

2. Methods Of Construction:

A. Excavation: Existing pavement to be removed shall be neatly cut along lines of removal with a saw or other approved equipment which leaves a neat straight joint line along the juncture with subsequently replaced pavement. Excavation in the vicinity of utilities and other structures shall be performed using hand tools. Use of hand operated pneumatic and electric jackhammers will be permitted only for breaking pavement and removal of masonry, concrete and boulders, or as otherwise directed by the Resident Engineer. The Contractor shall properly dispose of all materials excavated from test pits away from site. Test pits shall be excavated at locations shown on the contract drawings or as directed by the Resident Engineer. Additional test pits may be required and shall be excavated where required, as ordered by the Resident Engineer. All test pits shall be excavated to a depth and size necessary to locate the existing facilities. Sheeting shall be used when depth of excavation exceeds five (5) feet. The sheeting required shall be furnished and installed in full compliance with the State of New York and Federal Safety Codes requirements and as specified in contract, whichever is more stringent. Care shall be taken that no existing gas facilities or other structures are broken or damaged. All broken or damaged facilities shall be reported immediately to facility operator who shall decide whether such facilities shall be repaired or replaced by company forces or by City contractor and in conformance with “General Provisions; Gas Cost Sharing Work Paragraph No. 9”. Contractor shall excavate all material encountered, including large masses of concrete, cemented masonry and boulders, as directed by the Resident Engineer. Any type of excavation protection used, shall satisfy the following:

(a) Industrial Code Rule 753.
(b) Prevent injury to workers and the public, and avoid damage to existing water, sewer, and gas pipes or other structures, and to pavements and their foundations, through caving or sliding of the

banks of the excavation.

Should it become necessary, as determined by the Resident Engineer, to enlarge any test pit in any dimension after sheeting has been placed, the Contractor shall remove portions of the sheeting, as necessary, enlarge the test pits as directed, and replace the sheeting without additional compensation for this work other than for the additional volume of material excavated.

B. Maintenance Of Test Pits: Excavated test pits shall be maintained free of debris and kept dry by the Contractor in order to permit the inspection and measurements and to determine the locations of facilities. In order to accomplish this, Contractor shall, upon completion of excavation and placement of sheeting (if depth greater than five (5) feet), furnish and install adequate steel plates and posting over the excavated pits and shall temporarily remove all equipment debris and workers, and relocate barricades in order to open the full width of street to traffic during nonworking hours. The Contractor shall then, at no additional cost, relocate such barricades, barrels, cones and other warning devices and remove steel plates, as and when directed by the Resident Engineer to facilitate the inspection of exposed facilities. When work is being performed and the pits are not covered with steel plates, the Contractor shall provide complete and safe access to the test pits as may be required, and he shall provide construction barricades and maintain traffic at all times as shown or as directed by the Resident Engineer. Upon completion of test pit inspection by the Resident Engineer, the pit shall be backfilled by the Contractor as specified in contract, except that backfill material shall conform to contract specifications for such purpose.

C. Pavement And Sidewalk Restoration: After backfilling is completed, the Contractor shall construct a temporary pavement consisting of a minimum of four (4) inches thick asphaltic concrete mixture in roadway areas or a two (2) inches thick asphaltic concrete mixture in sidewalk areas in order to maintain existing pedestrian and vehicular traffic. This temporary pavement shall be maintained until permanent pavement and sidewalk replacement is constructed as specified in contract.

3. Measurements:

The quantity to be measured for payment shall be the number of cubic yards of material removed from within the limits of the pit dimensions as directed by the Resident Engineer. The volume occupied by existing pipes or other structures remaining within the maximum payment lines will not be deducted from the total volume measured except, where the cross sectional area of these facilities exceeds four (4) square feet. As determined by the Resident Engineer, the quantity measured for payment may be proportionate to a fair and reasonable estimate of gas responsibility in the total volume excavated.

4. Price To Cover:

The contract price bid per cubic yard for test pits shall cover all additional costs of labor, material, insurance, equipment, appliances and incidentals required to excavate test pits, including removal and disposal of excavated materials, sheeting, steel plating, backfill, compaction and temporary pavement and sidewalk restoration all in accordance with the specifications and as directed by the Resident Engineer. The price shall also include the cost of providing safe access to the excavation by facility operator for the performance of certain test to determine operating status of gas facilities prior to City work. The price shall also include support and protection of all gas facilities crossing excavation, paralleling and/or encroaching any face of excavation.

SECTION 6.08a – Pier And / Or Plate Method of Protection for Ductile Iron Water Main with Less Than 24" cover.

A. Description:

Under this item, the Contractor shall provide all labor, materials, equipment, insurance and incidentals required to protect ductile iron water mains that are installed with a cover of 24 inches or less crossing over gas facilities of various sizes. The work shall be performed in accordance with the contract plans, specifications and at the direction of the facility operator(s), upon approval from the Resident Engineer.

B. Materials:

The Contractor shall supply all materials (concrete, beams, plates, etc.) necessary to provide the pier and plate method of protection as shown on BWS Standard Drawing No. 46464-Z.

C. Method of Construction:

The Contractor shall provide pier and plate protection in accordance with BWS Standard Drawing No. 46464-Z. The Contractor shall support, maintain and accommodate the water main and all other utility facilities during the installation of the pier and plate components. The Contractor shall be solely and totally responsible for the disturbances and/or any damages to such facilities.

D. Method of Measurement:

The quantity to be measured for payment shall be each (EA.) location wherein an additional area of square foot (S.F.) of steel plate is required to be installed to protect ductile iron water mains with a cover of 24 inches or less crossing over gas facilities of various sizes, as directed by the Facility Operator(s) upon approval from the Resident Engineer. The additional area of square foot (S.F.) of steel plate shall be in accordance with BWS Standard Drawing No. 46464-Z.

E. Price to Cover:

The price shall cover the cost of all supervision, labor, material, equipment, and incidentals necessary to construct the specified method of protection. The work shall also cover the cost to cut, break, and remove additional pavement, additional excavation, sheeting, maintenance of traffic, traffic plates, and to furnish and install additional backfill and pavement restoration. This item does not cover the costs for special care excavation around gas facilities that are covered under separate items.

F. References:

1. BWS Standard Drawing No. 46464-Z.

SECTION 6.09 - Trench Excavation and Backfill for New Gas Mains and Services

(For National Grid Work Only)

1. Description:

Under this section, the contractor shall furnish all labor, materials, equipment, insurance, permits and incidentals required to break/remove roadway and sidewalk pavement, excavate, backfill and restore gas trenches. The trench to be excavated shall be determined by the size of the gas facility to be installed. The work shall be performed in accordance with applicable specifications, and/or at the direction of the Resident Engineer in consultation with the facility operator.

2. Materials:

All materials used to excavate and prepare trenches shall be supplied by the Contractor and be approved by the facility operator in consultation with the Resident Engineer.

3. Method of Construction:

Excavation – The Contractor shall saw cut and/or break and remove existing roadway which may include but is not limited to, asphalt, concrete and cobblestone, utilizing approved equipment that leaves a neat straight joint line along the juncture with subsequently replaced pavement. Prior to starting the trenching operation, the contractor shall excavate the appropriate gas main tie-in pits at the extremities of the gas main sections to be replaced. Test pits shall be excavated to determine exact location of all tie-in pits and at appropriate intervals along proposed trench excavation to verify lane and clearances as shown on the contract plans. The tie-in pits shall be adequately protected by the contractor using wood fencing or steel traffic plates until such time when the facility operator has completed the tie-in work. The Contractor shall be permitted to excavate utilizing a combination of machine and hand excavation, as field conditions warrant, and as directed by the facility operator. The trench shall be adjusted so as to provide for a nominal cover on the new gas facilities or as required based on field conditions, applicable specifications, or as directed by the facility operator in consultation with the Resident Engineer. The width of the trench shall be as directed by the facility operator in consultation of the Resident Engineer. The bottom of the trench shall be graded smooth with a minimum cushion of 3 inches of clean sand and in conformance with applicable specification and be compacted, to minimize initial settlement and to avoid "point" support of new gas facilities. All stones projecting into the trench bottom shall be removed, and the voids backfilled before the new gas facilities are installed. Where streets are not to final grade, the cover shall be measured from the final grade, or the existing grade, whichever provides the deeper trench. Excavation in the vicinity of utilities and other structures shall be performed using hand tools. The contractor shall properly dispose of all materials excavated away from site. Size and location of excavation shall be as directed by the facility operator in consultation with the Resident Engineer. Trenches shall be excavated to a depth and size necessary to facilitate the installation of the new gas facility and in conformance with the applicable specification. All existing facilities that are encountered during trench excavating shall be protected in a manner suitable to the facility operator in consultation with the Resident Engineer. Tight sheeting shall be used, as required, based on field conditions and/or when the depth of excavation is equal to or greater than five feet. Skeleton type sheeting will not be permitted. The sheeting required shall be furnished and installed in full compliance with the State of New York and Federal Safety Code requirements and in compliance with applicable specifications and/or as directed by the facility operator in consultation with the Resident Engineer. Care shall be taken that no existing gas facilities or other structures are broken or damaged. Contractor shall excavate all material encountered necessary to facilitate the installation of the new gas facilities, and as directed by the facility operator. Care should be taken to avoid damage to existing utility facilities and structures, and to pavements and their foundations, and to avoid caving or sliding banks within the excavation.

Maintenance of Trench Excavation - Excavated trenches shall be maintained free of debris and kept dry by the contractor. In order to accomplish this, contractor shall, upon completion of excavation and placement of sheeting (as required and/or if depth is equal to or greater than five feet), furnish and install adequate steel plates, as directed by the facility operator in consultation with the Resident Engineer, and posting over

the excavated trenches and shall temporarily remove all equipment debris and workers, and relocate barricades in order to open the full width of street to traffic during non-working hours, as required based on DOT requirements. National Grid forces will perform all live gas main connections, dead gas main cut-outs, and/or service work associated with disconnecting and reconnecting from old to new gas main The Contractor shall then, at no additional cost, relocate such barricades barrels, cones and other warning devices and remove steel plates, as and when directed by the facility operator in consultation with the Resident Engineer to facilitate the installation of the new gas facilities. When work is being performed and the excavations are not covered with steel plates, the Contractor shall provide complete and safe access to the trench as may be required, and shall provide construction barricades and maintain traffic at all times as shown or as directed by the facility operator in consultation with the Resident Engineer. The contractor has the responsibility to maintain and set to grade all National Grid hardware during backfill and pavement restoration. Upon completion of installation of the new gas facility, the trench excavation shall be backfilled by the contractor in accordance with Contract requirements and all backfill material shall conform to contract specifications for such purpose.

Pavement and Sidewalk Restoration - After backfilling is completed, the contractor shall install temporary pavement consisting of six inches (6”) thick asphaltic concrete mixture in roadway areas or a two inches (2”) thick asphaltic concrete mixture in sidewalk areas in order to maintain existing pedestrian and vehicular traffic. This temporary pavement shall be maintained until permanent replacement as specified in contract. Permanent pavement restoration shall be as required by the appropriate contract specifications and as directed by the Resident Engineer.

4. Method of Measurement:

The quantity to be measured for payment shall be the number of cubic yards (C.Y.) of trench actually excavated, including roadway pavement, base and/or sidewalk concrete removed within the limits of the trench as directed by the Resident Engineer in consultation with the facility operator. The volume occupied by existing pipes or other structures will be deducted from the total volume measured as shown on contract drawing(s) Title: EP-7 SECT. 6.09 GAS SPECIALTY CONTRACTOR WORK, or as encountered based on existing field conditions.

5. Price to Cover:

The unit price bid per cubic yard for excavation shall include the cost of all supervision, labor, material, equipment, insurance and incidentals necessary to complete excavation trenches, including backfill, compaction testing and restoration of trenches and tie-ins pits as specified or shown on the contract, plans. The bid price shall also include the cost of coordinating the sewer and water main work to be performed by the contractor with the gas installation work to be performed by others. The price shall also include, associated maintenance of traffic, and traffic plates and openings and closings of plates as may be required in order to provide access to the facility operator during the new gas facility installation, and installing, removing and maintaining tight sheeting that may be required, cut, break and remove various thickness of surface and base pavement, excavate by hand, furnish, place and compact, in compliance with DOT requirements, clean sand backfill following installation of the gas facility. Any required removing, trucking, storing, and disposing of material shall be deemed included in the unit price. The price shall also include the cost of providing temporary pavement restoration. Permanent pavement restoration shall be deemed included in this item, as required and as directed by the Resident Engineer.

SECTION 6.09a Trench Excavation and Backfill for New Gas Mains and Services (For Con Edison Work Only)

1. Description:

Under this section, the contractor shall furnish all labor, materials, equipment, insurance, permits and incidentals required to break/remove roadway and sidewalk pavement, excavate, backfill and restore gas trenches. The trench to be excavated shall be determined by the size of the gas facility to be installed. The work shall be performed in accordance with applicable specifications, and/or at the direction of the Resident Engineer in consultation with the facility operator.

2. Materials:

All materials used to excavate and prepare trenches shall be supplied by the Contractor and be approved by the facility operator in consultation with the Resident Engineer. Clean sand backfill material shall be used and shall conform to Con Edison specification EO-1181-rev.6, General Specification for Backfilling of Trench and Small Openings.

3. Method of Construction:

Excavation – The Contractor shall saw cut and/or break and remove existing roadway which may include but is not limited to, asphalt, concrete and cobblestone, utilizing approved equipment that leaves a neat straight joint line along the juncture with subsequently replaced pavement. Prior to starting the trenching operation, the contractor shall excavate the appropriate gas main tie-in pits at the extremities of the gas main sections to be replaced. Test pits shall be excavated to determine exact location of all tie-in pits and at appropriate intervals along proposed trench excavation to verify lane and clearances as shown on the contract plans. The tie-in pits shall be adequately protected by the contractor using wood fencing or steel traffic plates until such time when the facility operator has completed the tie-in work. The Contractor shall be permitted to excavate utilizing a combination of machine and hand excavation, as field conditions warrant, and as directed by the facility operator. The trench shall be adjusted so as to provide for a nominal cover on the new gas facilities or as required based on field conditions, applicable specifications, or as directed by the facility operator in consultation with the Resident Engineer. The width of the trench shall be as directed by the facility operator in consultation of the Resident Engineer. The width and depth of the trench shall conform to Con Edison Gas Operations drawing 309495 rev. 4, Trench Excavation for Gas Mains Up to 350 PSIG, or as directed by the facility operator in consultation of the Resident Engineer. The bottom of the trench shall be graded smooth with a minimum cushion of 3 inches of clean sand and in conformance with applicable specification and be compacted, to minimize initial settlement and to avoid "point" support of new gas facilities. All stones projecting into the trench bottom shall be removed, and the voids backfilled before the new gas facilities are installed. Where streets are not to final grade, the cover shall be measured from the final grade, or the existing grade, whichever provides the deeper trench. Excavation in the vicinity of utilities and other structures shall be performed using hand tools. The contractor shall properly dispose of all materials excavated away from site. Size and location of excavation shall be as directed by the facility operator in consultation with the Resident Engineer. Trenches shall be excavated to a depth and size necessary to facilitate the installation of the new gas facility and in conformance with the applicable specification. All existing facilities that are encountered during trench excavating shall be protected in a manner suitable to the facility operator in consultation with the Resident Engineer. Tight sheeting shall be used, as required, based on field conditions and/or when the depth of excavation is equal to or greater than five feet. Skeleton type sheeting will not be permitted. The sheeting required shall be furnished and installed in full compliance with the State of New York and Federal Safety Code requirements and in compliance with applicable specifications and/or as directed by the facility operator in consultation with the Resident Engineer. Care shall be taken that no existing gas facilities or other structures are broken or damaged. Contractor shall excavate all material encountered necessary to facilitate the installation of the new gas facilities, and as directed by the facility operator. Care should be taken to avoid damage to existing utility facilities and structures, and to pavements and their foundations, and to avoid caving or sliding banks within the excavation.

Maintenance of Trench Excavation - Excavated trenches shall be maintained free of debris and kept dry by the contractor. In order to accomplish this, contractor shall, upon completion of excavation and placement of sheeting (as required and/or if depth is equal to or greater than five feet), furnish and install adequate steel plates, as directed by the facility operator in consultation with the Resident Engineer, and posting over the excavated trenches and shall temporarily remove all equipment debris and workers, and relocate barricades in order to open the full width of street to traffic during non-working hours, as required based on DOT requirements. Con Edison forces will perform all live gas main connections, dead gas main cut-outs, and/or service work associated with disconnecting and reconnecting from old to new gas main The Contractor shall then, at no additional cost, relocate such barricades barrels, cones and other warning devices and remove steel plates, as and when directed by the facility operator in consultation with the Resident Engineer to facilitate the installation of the new gas facilities. When work is being performed and

the excavations are not covered with steel plates, the Contractor shall provide complete and safe access to the trench as may be required, and shall provide construction barricades and maintain traffic at all times as shown or as directed by the facility operator in consultation with the Resident Engineer. The contractor has the responsibility to maintain and set to grade all Con Edison hardware during backfill and pavement restoration. Upon completion of installation of the new gas facility, the trench excavation shall be backfilled by the contractor in accordance with Contract requirements and all backfill material shall conform to contract specifications for such purpose.

Pavement and Sidewalk Restoration - After backfilling is completed, the contractor shall install temporary pavement consisting of six inches (6”) thick asphaltic concrete mixture in roadway areas or a two inches (2”) thick asphaltic concrete mixture in sidewalk areas in order to maintain existing pedestrian and vehicular traffic. This temporary pavement shall be maintained until permanent replacement as specified in contract. Permanent pavement restoration shall be as required by the appropriate contract specifications and as directed by the Resident Engineer.

4. Method of Measurement:

The quantity to be measured for payment shall be the number of cubic yards (C.Y.) of trench actually excavated, including roadway pavement, base and/or sidewalk concrete removed within the limits of the trench as directed by the Resident Engineer in consultation with the facility operator. The volume occupied by existing pipes or other structures will be deducted from the total volume measured as shown on contract drawing(s) Title: EP-7 SECT. 6.09 GAS SPECIALTY CONTRACTOR WORK, or as encountered based on existing field conditions.

5. Price to Cover:

The unit price bid per cubic yard for excavation shall include the cost of all supervision, labor, material, equipment, insurance and incidentals necessary to complete excavation trenches, including backfill, compaction testing and restoration of trenches and tie-ins pits as specified or shown on the contract, plans. The bid price shall also include the cost of coordinating the sewer and water main work to be performed by the contractor with the gas installation work to be performed by others. The price shall also include, associated maintenance of traffic, and traffic plates and openings and closings of plates as may be required in order to provide access to the facility operator during the new gas facility installation, and installing, removing and maintaining tight sheeting that may be required, cut, break and remove various thickness of surface and base pavement, excavate by hand, furnish, place and compact, in compliance with DOT requirements, clean sand backfill following installation of the gas facility. Any required removing, trucking, storing, and disposing of material shall be deemed included in the unit price. The price shall also include the cost of providing temporary pavement restoration. Permanent pavement restoration shall be deemed included in this item, as required and as directed by the Resident Engineer.

GAS COST SHARING STANDARD SPECIFICATIONS
SCHEDULE GCS-A

Average rate charged by utility companies to Disconnect and Reconnect Gas Services:

1. National Grid - $586.90 per Service/and Visit
2. Con Edison - $524.00 per Service/and Visit

IV - STANDARD SKETCHES; GAS COST SHARING WORK

Hereinafter attached are the following Standard Sketches for Gas Cost Sharing Work:

Sketch No. 1 - Support Requirements For Gas Mains And Services Crossing Excavation Greater Than 4' - 0" Wide At Any Angle

Sketch No. 1A - Support Requirements For Gas Mains Over 16" Diameter Up To And Including 48" Diameter Crossing Excavation At Any Angle

Sketch No. 2 - Typical Methods Of Measurement For Gas Crossings

Sketch No. 3 - Utility Crossings During Catch Basin Chute Connection Pipe Installation

Sketch No. 4 - Utility Crossings During Catch Basin Chute Connection Pipe Installation (Extra Depth)

Sketch No. 5 - Gas Main Encroachment On And/Or Parallel To Excavation Of Unsheeted Trench

GAS COST SHARING WORK (SKETCH NO. 1)

SUPPORT REQUIREMENTS FOR GAS MAINS AND SERVICES CROSSING EXCAVATION GREATER THAN 4'-0" WIDE AT ANY ANGLE

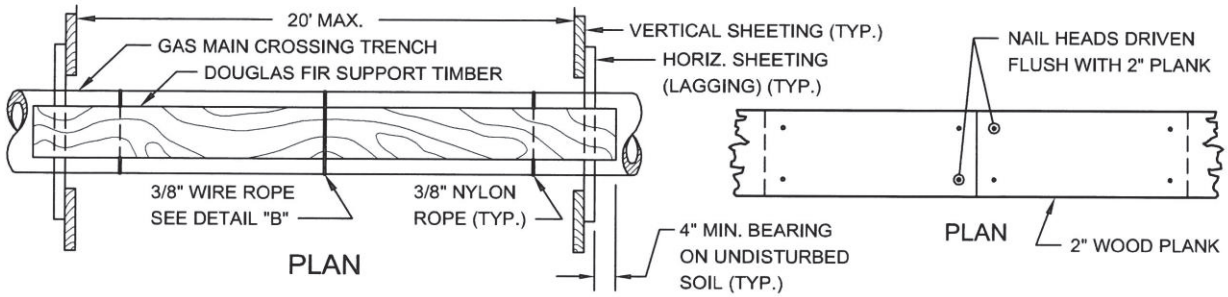

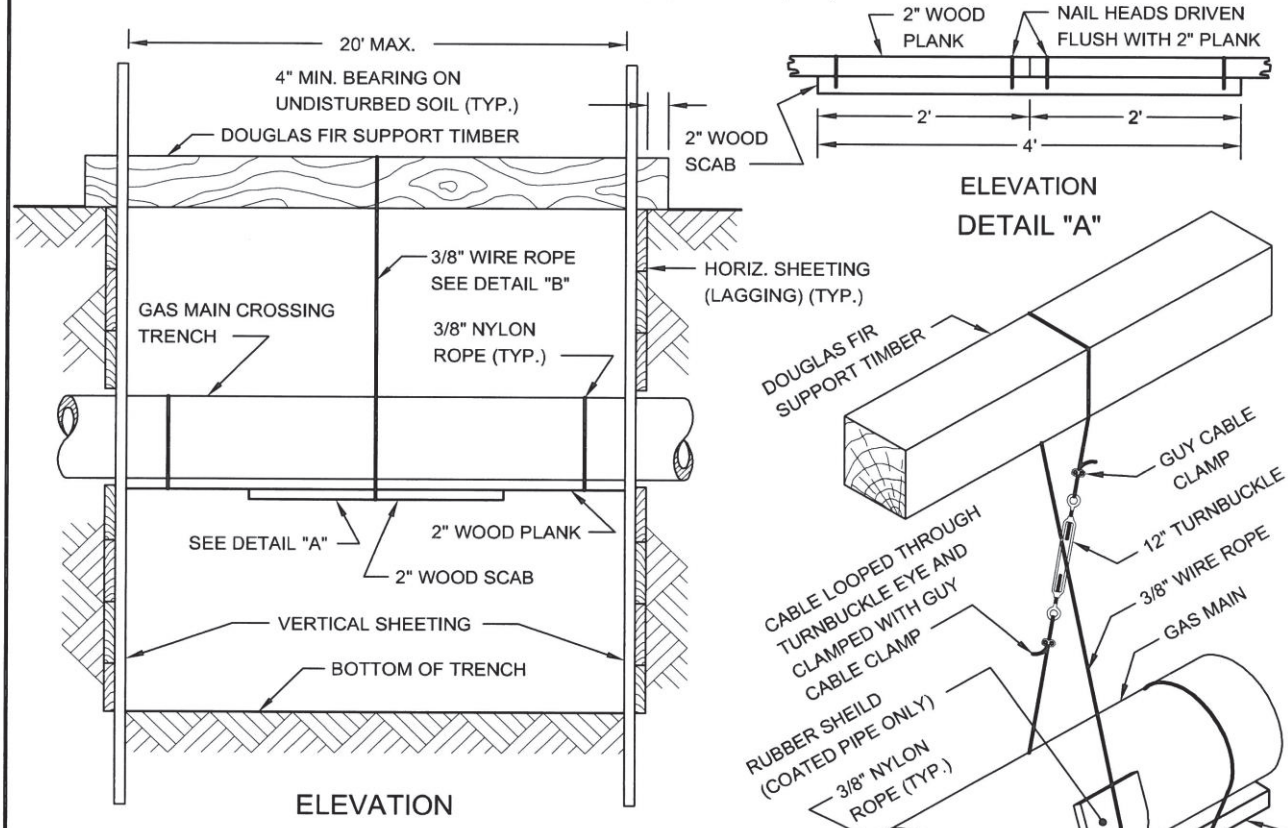

CABLE SUPPORT		TIMBER SUPPORT	
MAIN TYPE	SPACING	MAIN SIZE	TIMBER SIZE
CAST IRON	4' O.C. MAX.	UP TO 6"	6" X 6"
STEEL	10' O.C. MAX.	8" TO 10"	8" X 8"
PLASTIC	10' O.C. MAX.	12" TO 16"	10" X 10"

REVISED OCT. 2004 - L. ADRIEN
REVISED JUNE 1998 - J. WONG / W. PATALANOP. MOY

GAS COST SHARING WORK (SKETCH NO. 1A)

SUPPORT REQUIREMENTS FOR GAS MAINS OVER 16" DIAMETER UP TO AND INCLUDING 48" DIAMETER CROSSING EXCAVATION AT ANY ANGLE

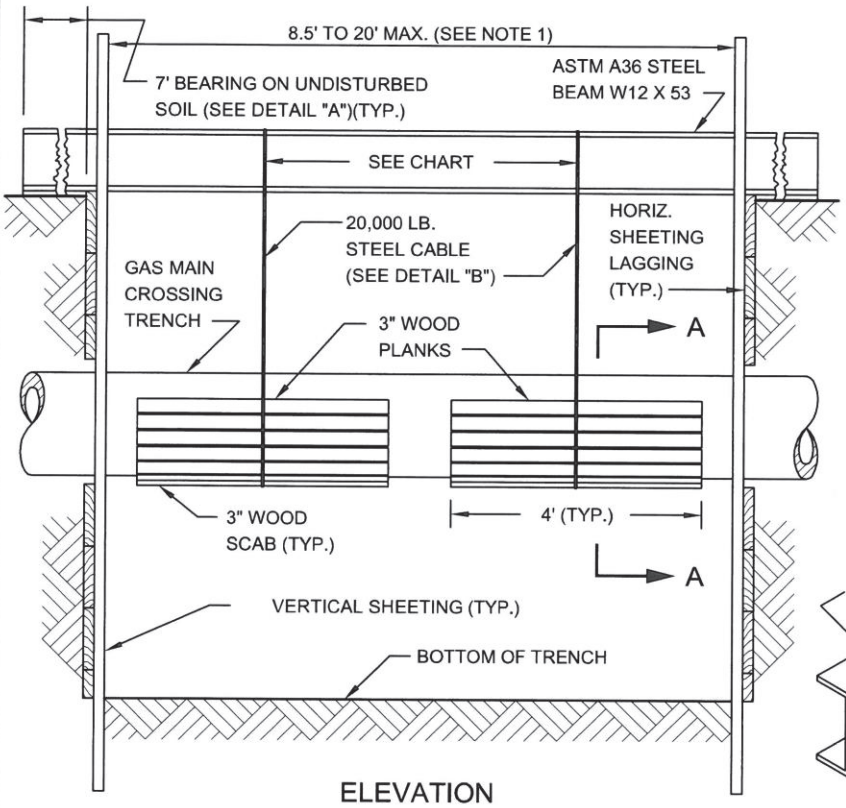

ELEVATION

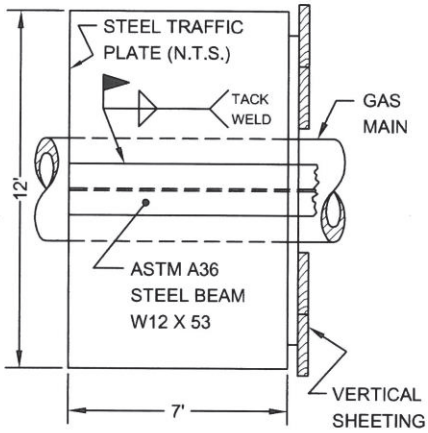

DETAIL "A"

CABLE SUPPORT	
MAIN TYPE	SPACING
CAST IRON	4' O.C. MAX.
STEEL	10' O.C. MAX.

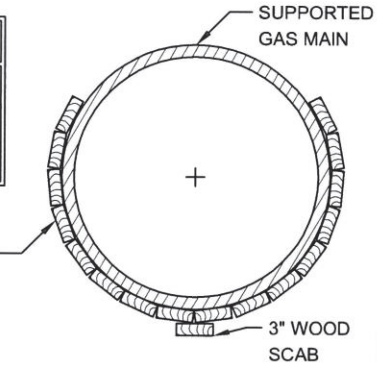

SECTION A-A

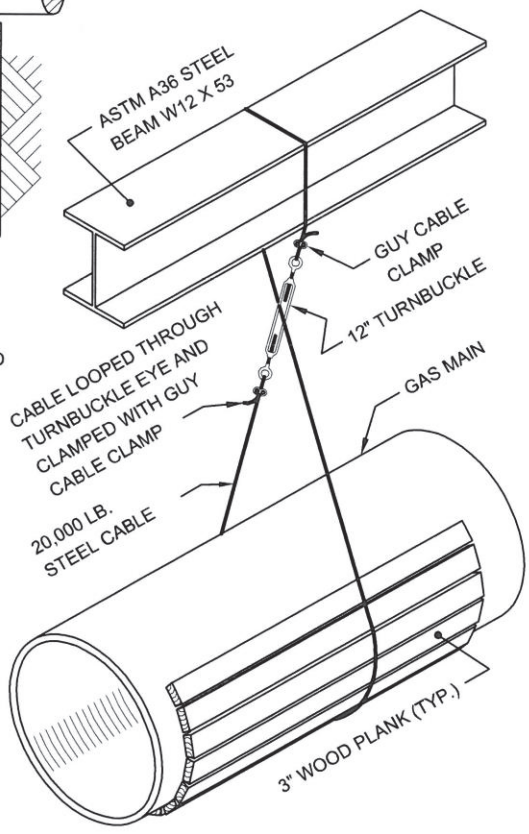

DETAIL "B"

NOTES:

(1) NO SUPPORT IS REQUIRED FOR GAS MAINS OVER 16" DIA. UP TO AND INCLUDING 48" DIA. CROSSING TRENCHES LESS THAN 8.5' WIDE.

(2) UNDERMINE A MAXIMUM OF 8.5 L.F. OF CAST IRON GAS MAIN AT A TIME.

(3) SET STEEL CABLE OVER 3" WOOD PROTECTIVE PLANKS AND PLACE AN ADDITIONAL 3" SCAB ON THE BOTTOM OF THE GAS MAIN.

(4) ADJUST STEEL CABLE UNTIL DEAD WEIGHT OF THE UNDERMINED GAS MAIN HAS BEEN TAKEN UP BY THE OVERHEAD STEEL BEAM SUPPORT.

(5) ALL SUPPORTS AND STEEL CABLES CAN BE REOMVED ONLY AFTER THE REQUIRED BACKFILL (AROUND AND BELOW GAS MAIN) HAS BEEN COMPACTED IN ACCORDANCE WITH NEW YORK CITY STANDARDS AND AT THE DIRECTIONS OF THE ENGINEER.

REVISED OCT. 2004 - L. ADRIEN
REVISED JUNE 1998 - J. WONG / W. PATALANO/P. MOY

GAS COST SHARING WORK (SKETCH NO. 2)

TYPICAL METHODS OF MEASUREMENT FOR GAS CROSSINGS

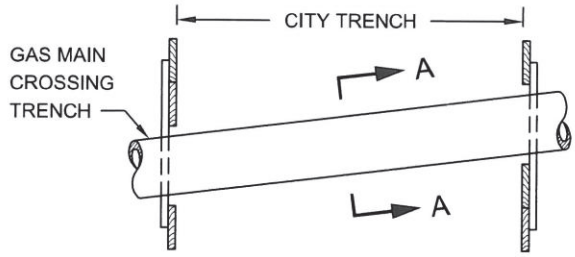

SINGLE FACILITY CROSSING

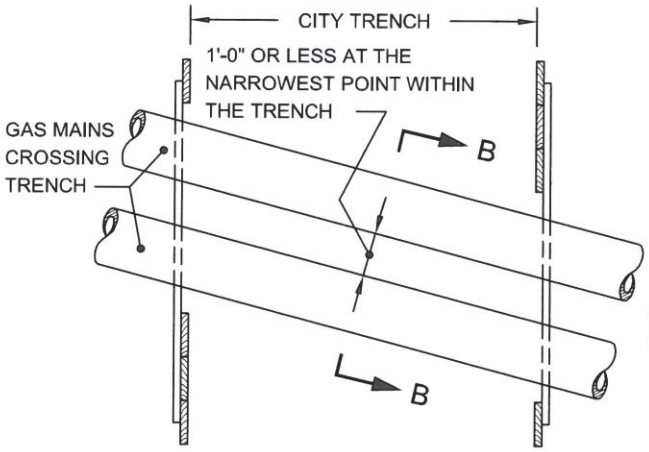

MULTIPLE FACILITIES
(GAS MAINS AT SAME ELEVATION)

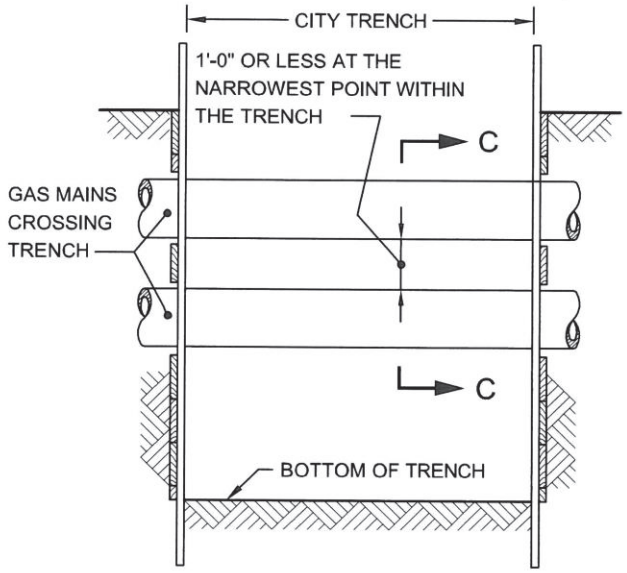

MULTIPLE FACILITIES
(ONE CROSSING AT DIFFERENT ELEVATIONS)

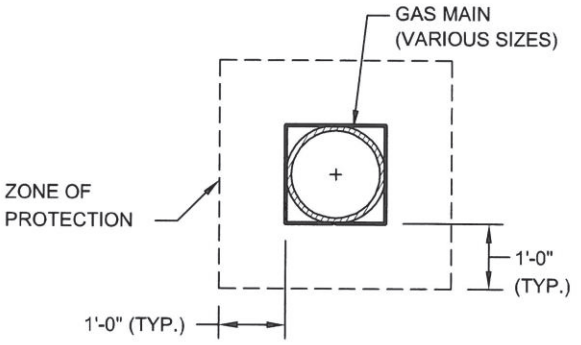

SECTION A-A

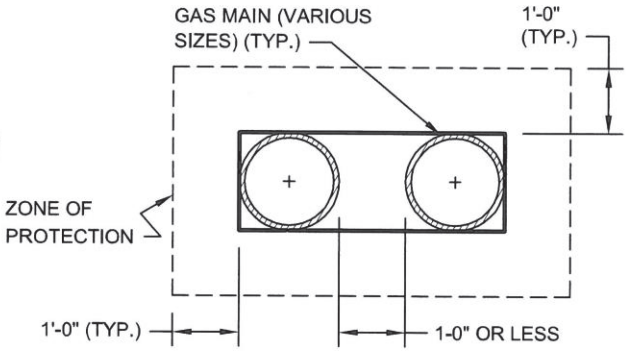

SECTION B-B

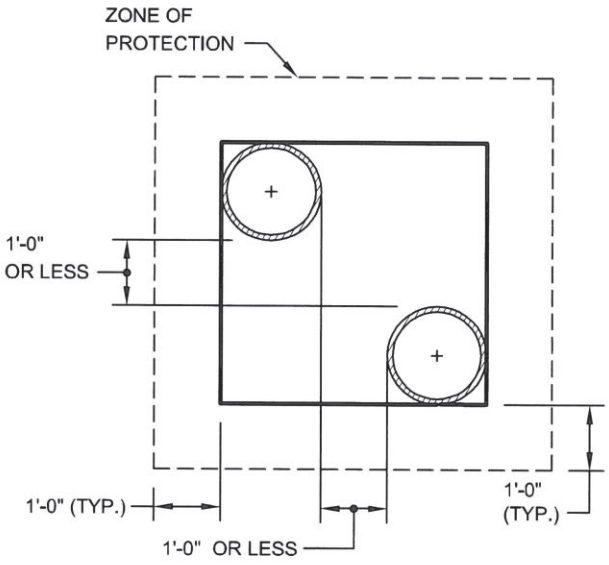

SECTION C-C

NOTE:

GAS MAINS MAY OR MAY NOT BE PARALLEL TO EACH OTHER.

REVISED SEPT. 2004 - L. ADRIEN
REVISED SEPT. 2004 - J. WONG/W. PATALANO/P. MOY

GAS COST SHARING WORK (SKETCH NO. 3)

UTILITY CROSSINGS DURING CATCH BASIN CHUTE CONNECTION PIPE INSTALLATION

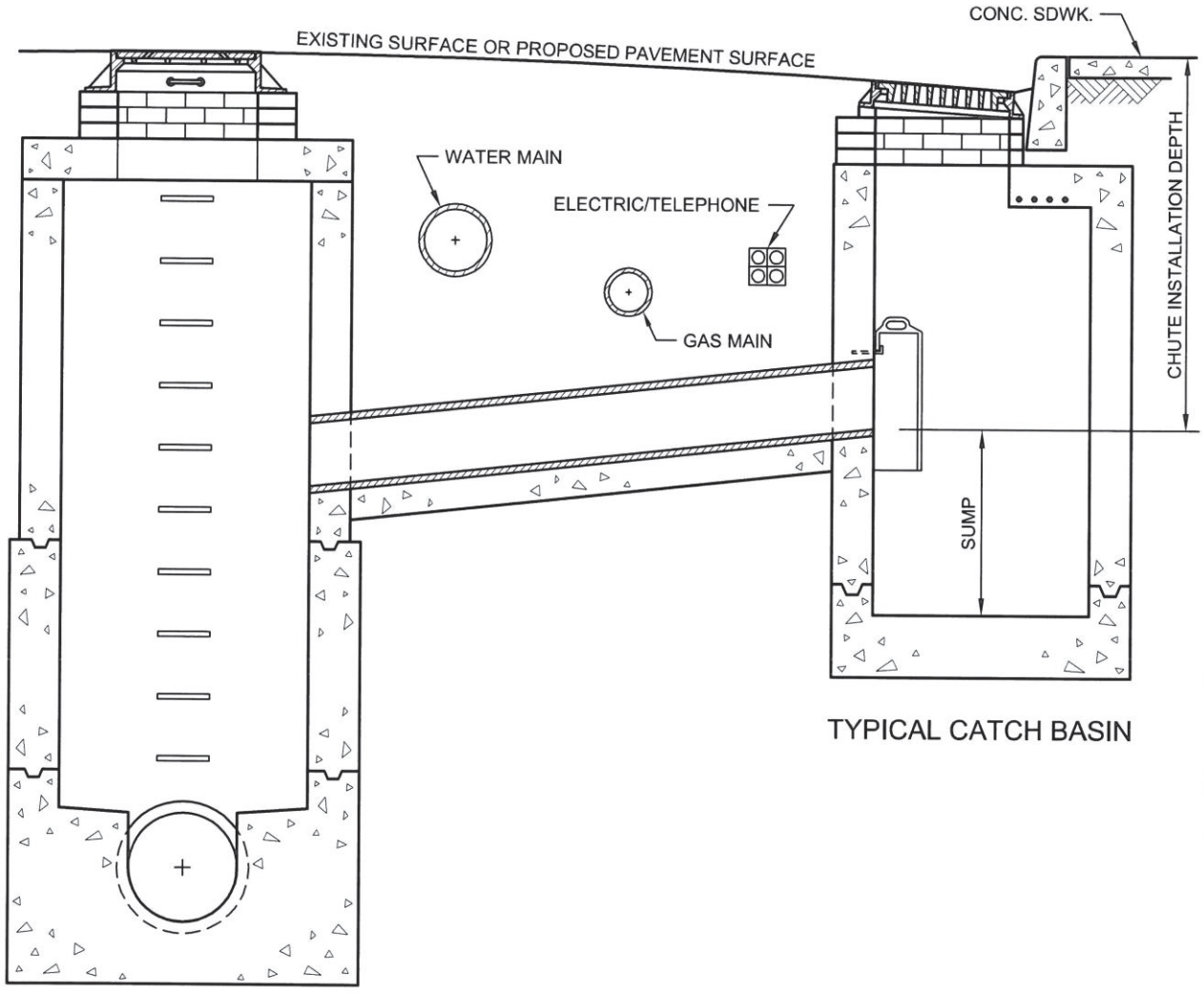

TYPICAL CATCH BASIN

TYPICAL SEWER MANHOLE

REVISED OCT. 2004 - L. ADRIEN
REVISED OCT. 1998 - J. WONG/W. PATALANO/P. MOY

GAS COST SHARING WORK (SKETCH NO. 4)

UTILITY CROSSINGS DURING CATCH BASIN CHUTE CONNECTION PIPE INSTALLATION (EXTRA DEPTH)

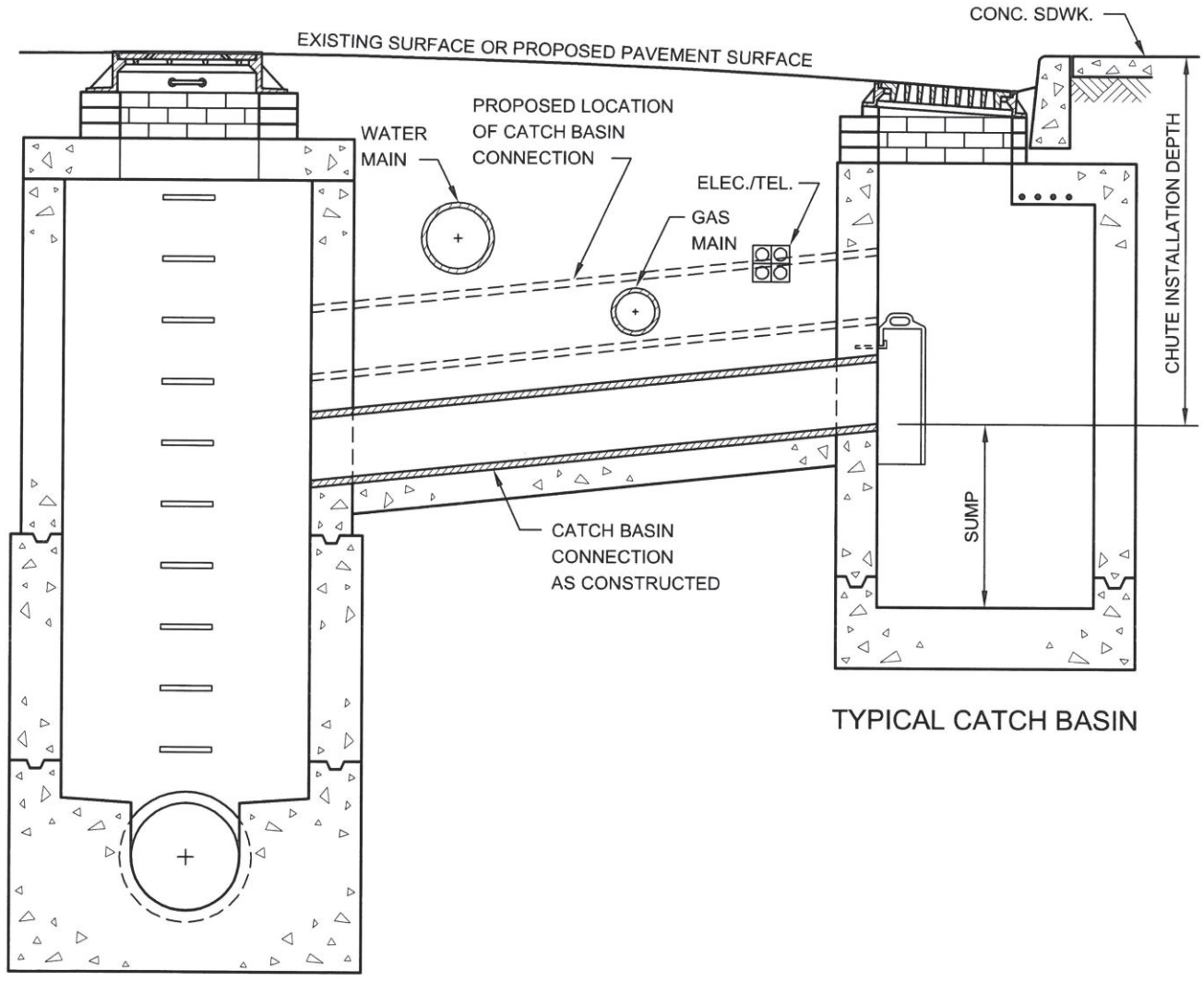

TYPICAL CATCH BASIN

TYPICAL SEWER MANHOLE

REVISED OCT. 2004 - L. ADRIEN
REVISED OCT. 1998 - J. WONG/W. PATALANO/P. MOY

GAS COST SHARING WORK (SKETCH NO. 5)

GAS MAIN ENCROACHMENT ON AND/OR PARALLEL TO EXCAVATION OF UNSHEETED TRENCH

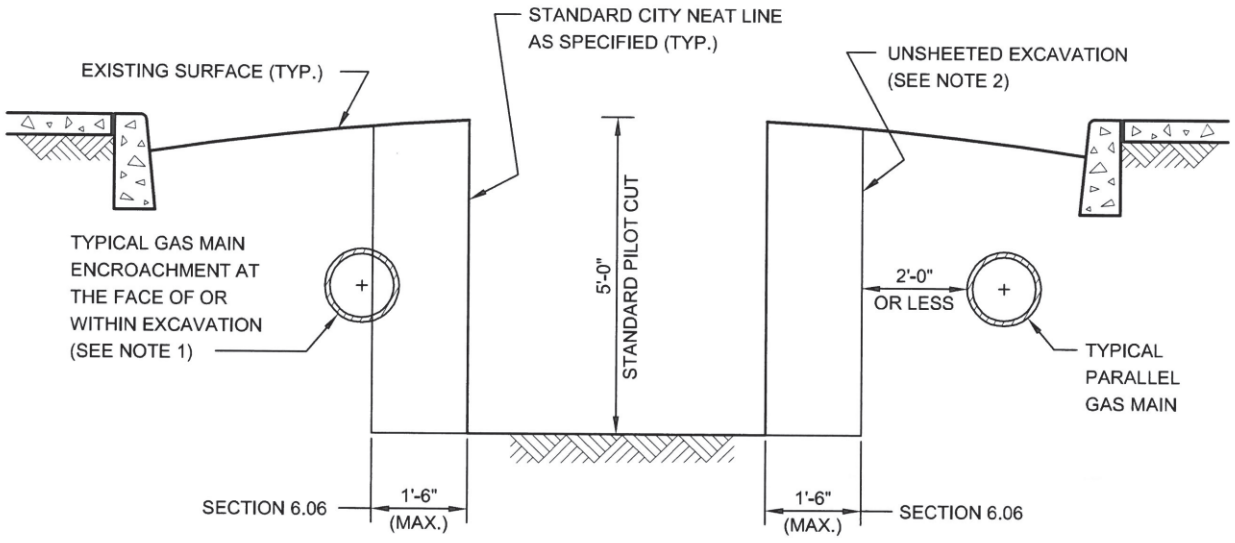

NOTES:

(1) GAS MAIN LOCATED AS SHOWN MAY HAVE TO BE REMOVED BY THE FACILITY OPERATOR PRIOR TO THE START OF CITY EXCAVATION, OTHERWISE, THE CONTRACTOR WILL BE PAID UNDER SECTION 6.06 FOR THE SAID WORK. IF GAS MAIN IS ABANDONED THEN SECTION 6.03 SHALL APPLY.

(2) EIGHTEEN (18) INCHES FROM STANDARD NEAT LINE IS THE MAXIMUM ALLOWABLE WIDTH OF AREA THAT MAY BE DISTURBED OR EXCAVATED DURING INSTALLATION OF CERTAIN TYPES OF SHEETING SYSTEMS THAT MEET THE REQUIREMENTS OF THE STANDARD SPECIFICATIONS OF THE DEPARTMENT OF DESIGN AND CONSTRUCTION OF THE CITY OF NEW YORK.

REVISED OCT. 2004 - L. ADRIEN
REVISED OCT. 1998 - J. WONG/W. PATALANO/P. MOY

V - PRELIMINARY GAS WORK TO BE PERFORMED BY FACILITY OPERATOR

APPLICABLE TO ALL GAS DRAWINGS:

- ALL RELOCATION WORK SHOWN IN THIS SECTION IS TO BE PERFORMED BY FACILITY OPERATOR.

- ALL SUPPORT AND PROTECTION WORK IS TO BE PERFORMED BY CITY CONTRACTOR.

- IF ADDITIONAL INFORMATION IS NEEDED REGARDING THE FACILITY OPERATOR RELOCATION WORK, THE CONTRACTOR IS ADVISED TO CONTACT THE GAS COMPANY REPRESENTATIVE:

O'NEILL A. WRIGHT
CONSOLIDATED EDISON
4 IRVING PLACE, 12TH FLOOR SWC
NEW YORK, NY 10003
TEL.: 212-460-3870

(NO TEXT IN THIS AREA, TURN PAGE)

GAS FACILITY COST ALLOCATION AGREEMENT
PROJECT NO. SANDRESM1
CAPITAL GAS MAIN INSTALLATION

Sketch #	ON STREET	FROM	TO	ITEM	SIZE	TYPE	LENGTH	REIMB LENGTH	REMARKS
1	Avenue D	E 9th Street	E 11th Street	80o	24	Stl	160	160	
2	E 10th Street	Avenue D	FDR	80j	8	Stl	365	365	
3	E 10th Street	Avenue D	FDR	82g	3	PE	75	75	
4	E 10th Street	Avenue D	FDR	80h	3	Stl	110	110	
5	E 10th Street	Avenue D	FDR	80h	3	Stl	50	50	
6	E 10th Street	Avenue D	FDR	80h	3	Stl	180	180	

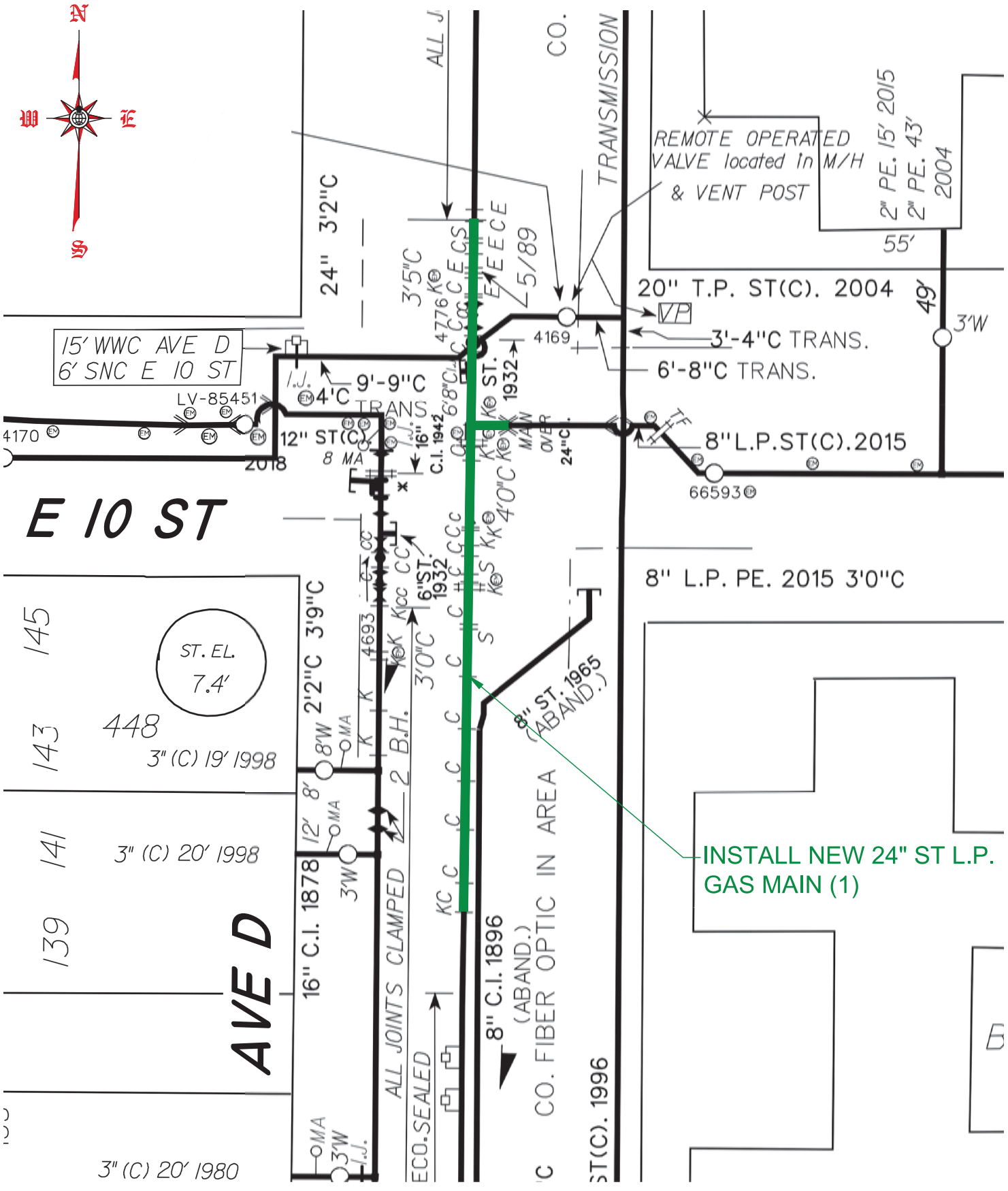

conEdison

CONSOLIDATED EDISON CO.
OF NEW YORK, INC.
4 IRVING PLACE
NEW YORK, NY 10003

SANDRESM1 / EP-7
INSTALLATION OF EAST SIDE COASTAL RESILIENCY

BOROUGH OF MANHATTAN

MAY 2020	SCALE: N.T.S.	1 OF 6

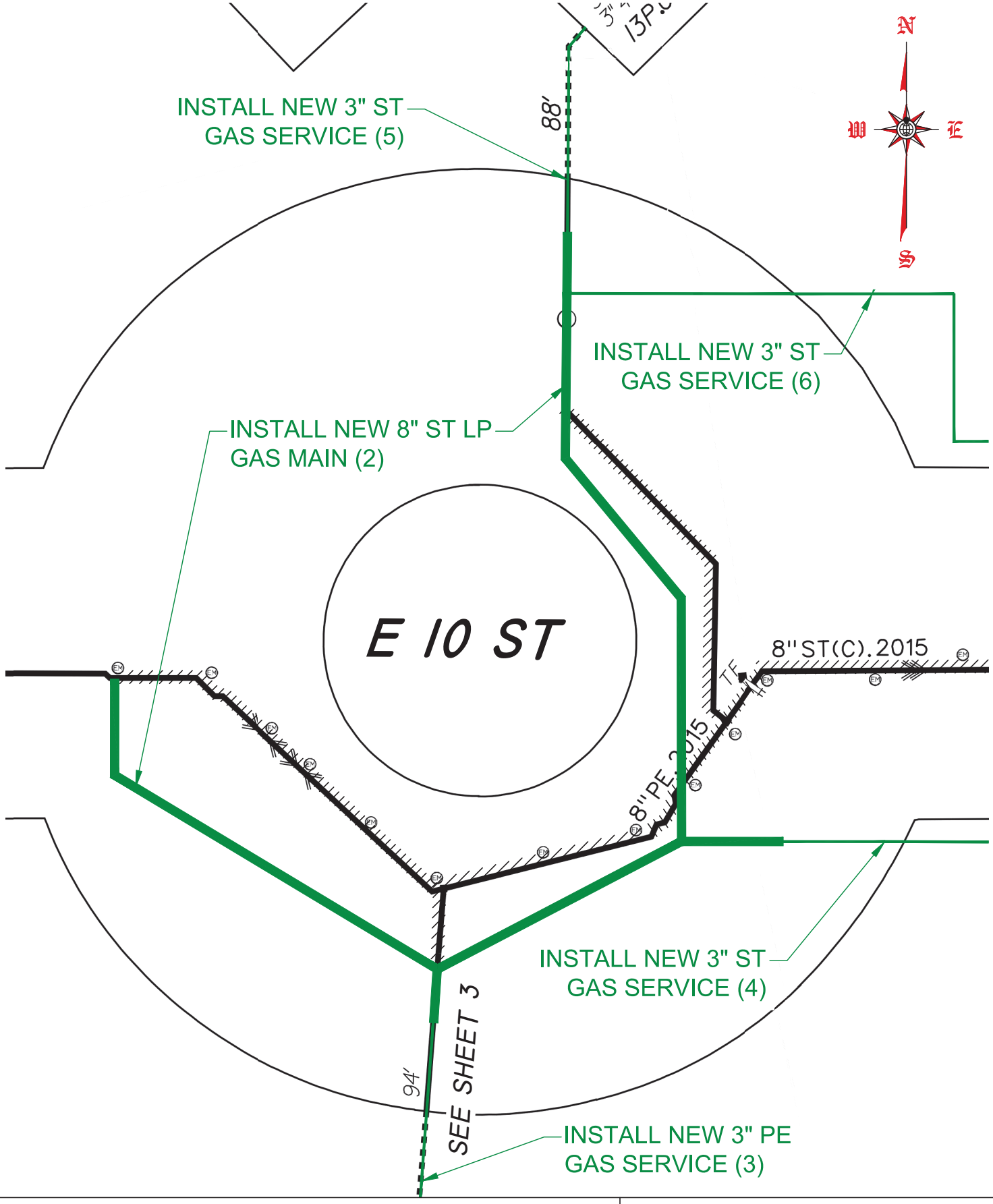

conEdison

CONSOLIDATED EDISON CO.
OF NEW YORK, INC.
4 IRVING PLACE
NEW YORK, NY 10003

SANDRESM1 / EP-7
INSTALLATION OF EAST SIDE COASTAL RESILIENCY

BOROUGH OF MANHATTAN

MAY 2020	SCALE: N.T.S.	2 OF 6

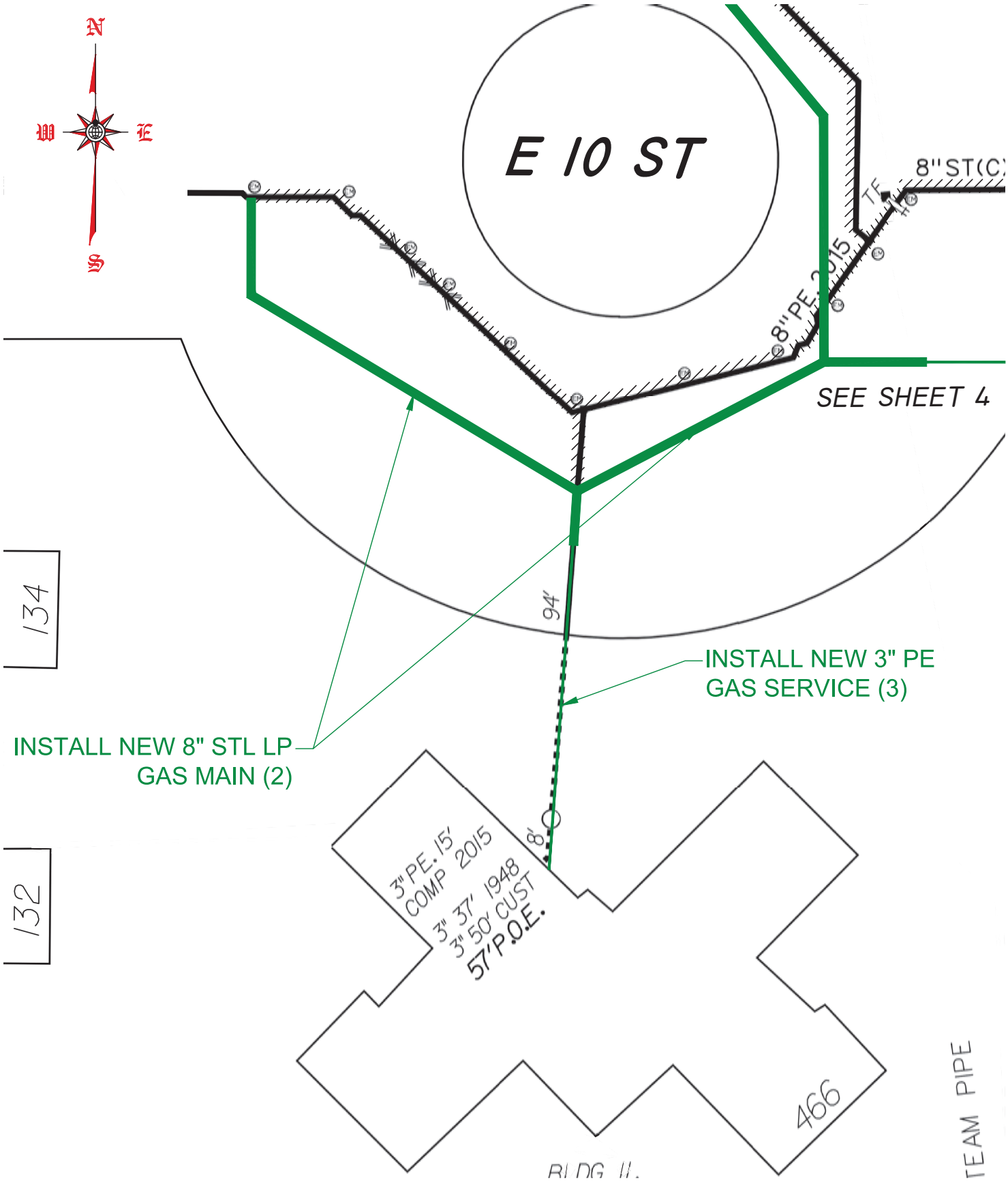

conEdison

CONSOLIDATED EDISON CO.
OF NEW YORK, INC.
4 IRVING PLACE
NEW YORK, NY 10003

SANDRESM1 / EP-7
INSTALLATION OF EAST SIDE COASTAL RESILIENCY

BOROUGH OF MANHATTAN

MAY 2020	SCALE: N.T.S.	3 OF 6

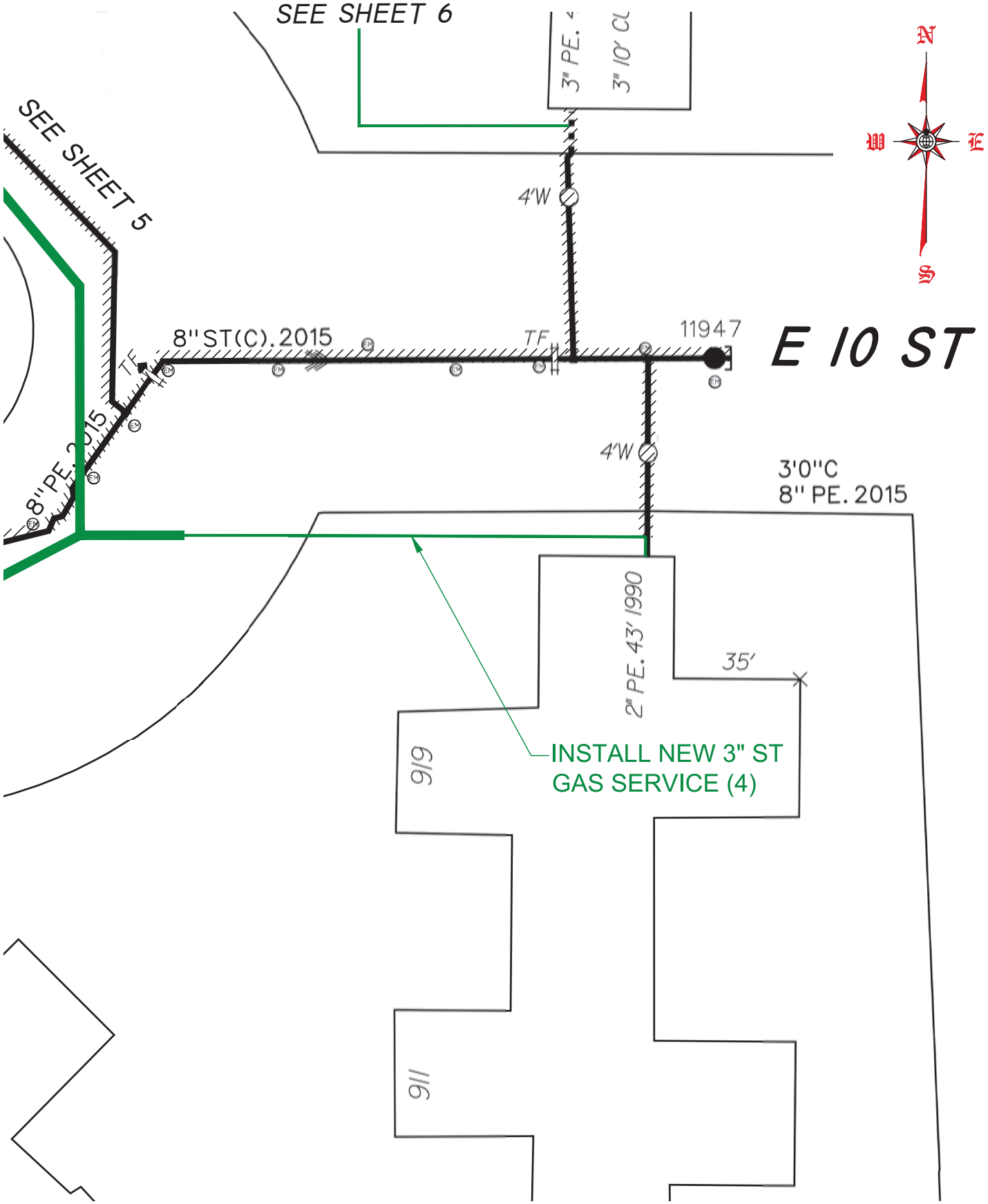

conEdison

CONSOLIDATED EDISON CO.
OF NEW YORK, INC.
4 IRVING PLACE
NEW YORK, NY 10003

SANDRESM1 / EP-7
INSTALLATION OF EAST SIDE COASTAL RESILIENCY

BOROUGH OF MANHATTAN

MAY 2020	SCALE: N.T.S.	4 OF 6

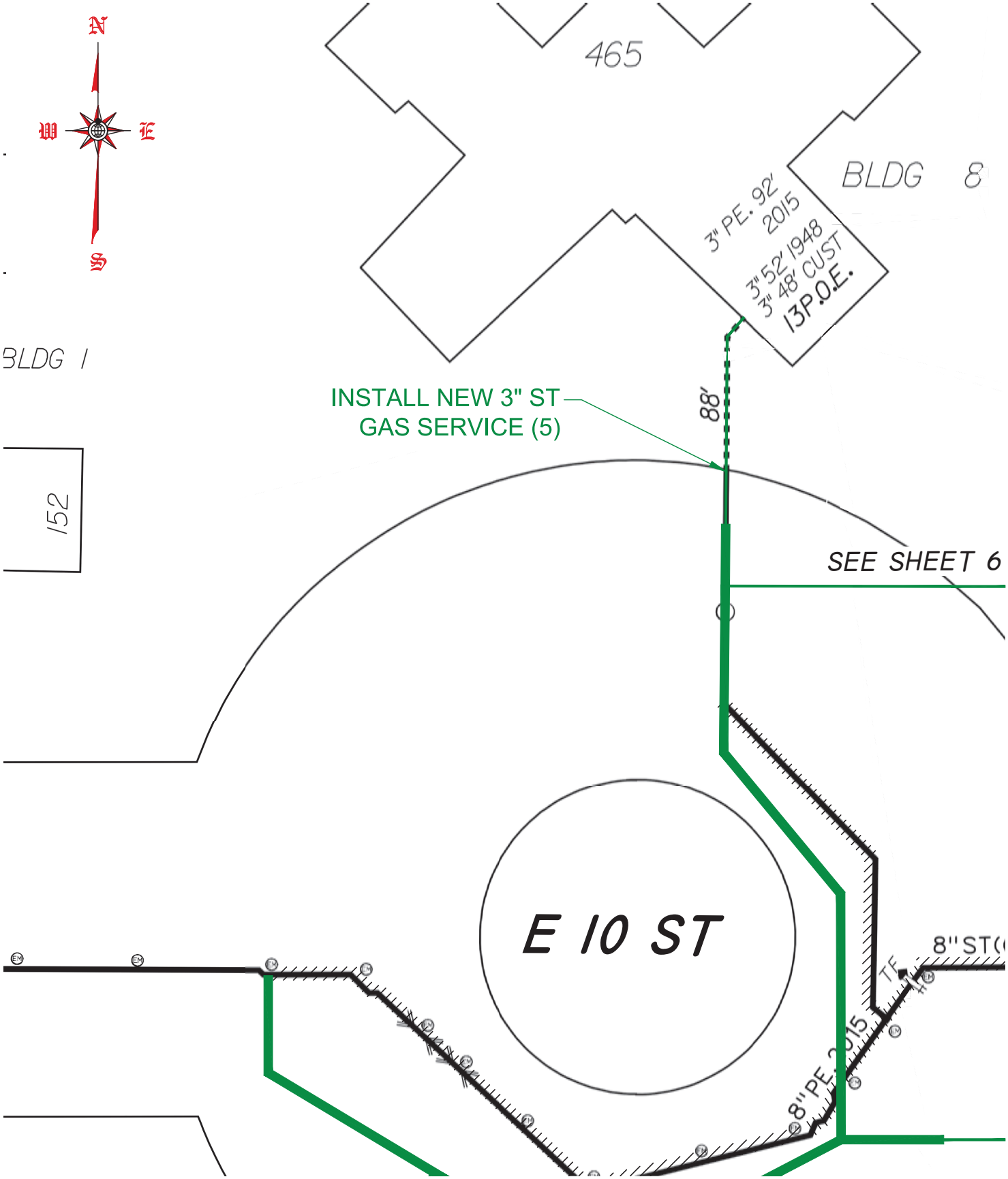

conEdison

CONSOLIDATED EDISON CO.
OF NEW YORK, INC.
4 IRVING PLACE
NEW YORK, NY 10003

SANDRESM1 / EP-7
INSTALLATION OF EAST SIDE COASTAL RESILIENCY

BOROUGH OF MANHATTAN

MAY 2020	SCALE: N.T.S.	5 OF 6

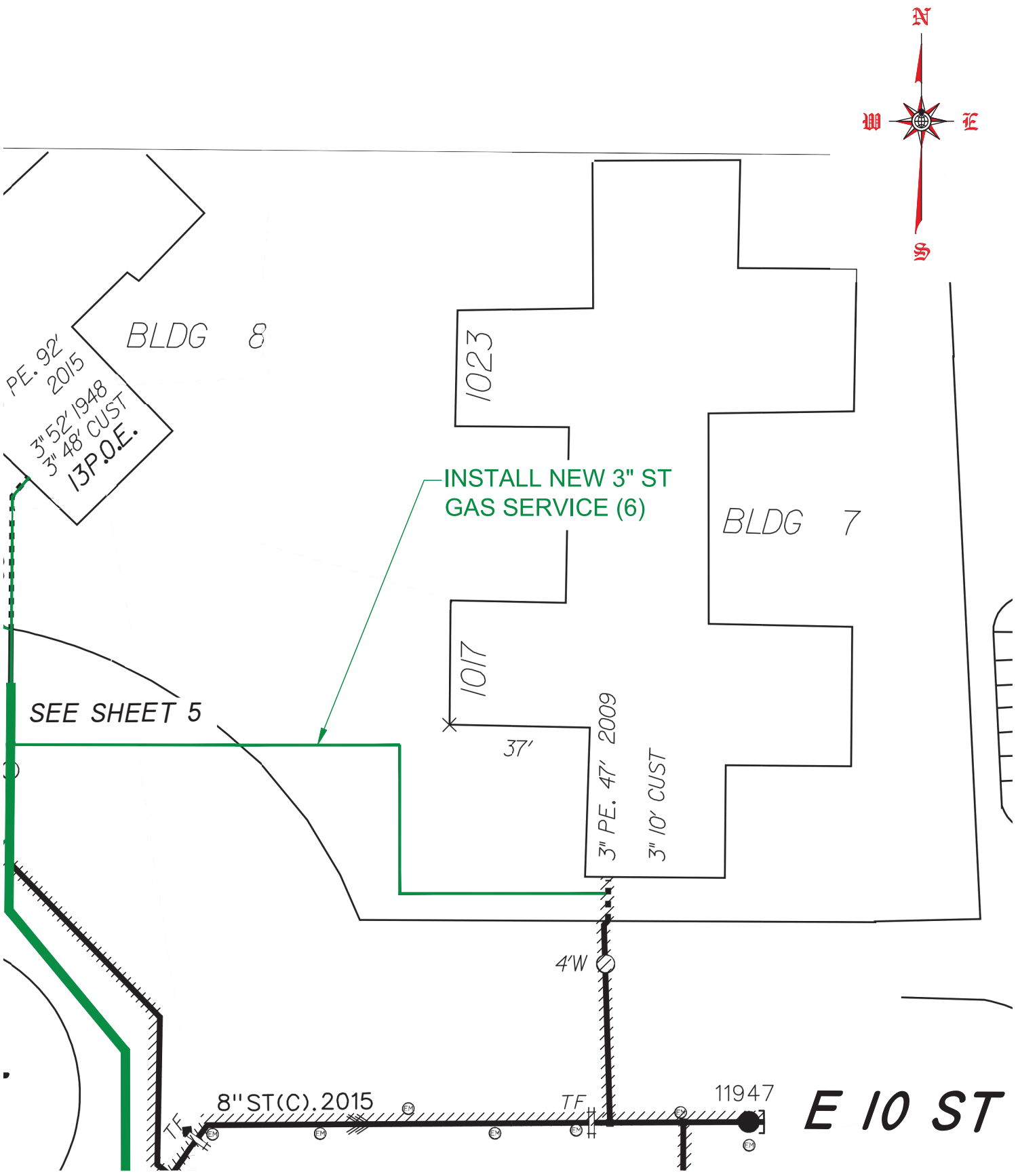

conEdison

CONSOLIDATED EDISON CO.
OF NEW YORK, INC.
4 IRVING PLACE
NEW YORK, NY 10003

SANDRESM1 / EP-7
INSTALLATION OF EAST SIDE COASTAL RESILIENCY

BOROUGH OF MANHATTAN

MAY 2020	SCALE: N.T.S.	6 OF 6

VI - LISTING OF APPROXIMATE LOCATIONS OF EP-7 BID ITEMS QUANTITIES

(NO TEXT IN THIS AREA, TURN PAGE)

SCOPE OF WORK
SUPPORT AND PROTECTION
FOR CONTRACT NUMBER SANDRESM1

The City of New York Department of Design and Construction is planning to install sewers and/or water mains and all appurtenances in various locations in The City of New York along with all work incidental thereto.

6.01.3- Gas Main Crossing Sewer Up To 36 - 42" Diameter (Ea.)

2 in Various Locations as Required

6.02 - Extra Excavation for Catch Basin Chute Connection

2 in Various Locations as Required

6.03 - Removal of Abandoned Gas Facilities - All Sizes (L.F.)

870 in Various Locations as Required

6.03.1a- Removal of Abandoned Gas Facilities with Possible Coal Tar Wrap. All Sizes (For Con Edison Work Only) (L.F.)

150 in Various Locations as Required

6.04 – Adjust Hardware to Grade Using Spacer Rings/ Adopters (Street Repaving) (Ea.)

10 in Various Locations as Required

6.05 – Adjust Hardware to Grade by Resetting (Road Reconstruction) (Ea.)

10 in Various Locations as Required

SCOPE OF WORK
SUPPORT AND PROTECTION
FOR CONTRACT NUMBER SANDRESM1

The City of New York Department of Design and Construction is planning to install sewers and/or water mains and all appurtenances in various locations in The City of New York along with all work incidental thereto.

6.06 - Special Care Excavation and Backfilling (C.Y.)

230 CY in Various Locations as Required, Including but Not Limited To All Gas Services Crossing Unsheeted Water Mian Trenches

6.07 - Test Pits for Gas Facilities (C.Y.)

100 in Various Locations as Required

6.08A - Pier And / Or Plate Method of Protection for Ductile Iron Water Main with Less Than 24" cover (Ea.)

1 in a location as Required

6.09a – Trench Excavation/backfill for New Gas Mains & Services. Gas Installed By Others. (For Con Edison Work Only) (C.Y)

776 in Various Locations as Required

SCOPE OF WORK
SUPPORT AND PROTECTION
FOR CONTRACT NUMBER SANDRESM1

PROJECT NO. SANDRESM1 6.09 Trench Excavation/Backfill Computations (CY) Calculation						
Item	Sketch Sheet	Gas Lines	Trench Dimension (ft.)			Volume (CY)
			L	W	D	
1	1	24" Main in Avenue D	160.00	5.00	5.00	148.15
2	2	8" Main in East 10th Street	365.00	3.00	5.00	202.78
3	3	3" service south side of E. 10th St.	75.00	3.00	4.00	33.33
4	4	3" service south side of E. 10th St.	110.00	3.00	4.00	48.89
5	5	3" service north side of E. 10th St.	50.00	3.00	4.00	22.22
6	6	3" service north side of E. 10th St.	180.00	3.00	4.00	80.00
			(A) GAS TRENCH VOLUME			535.37
			(B) MAIN TIE-IN PITS (4 x 22.2 CY)			88.80
			(C) SERVICE TIE-IN PITS (4 x 5.6 CY)			22.40
			(A) + (B) + (C)			646.57
			ADD 20% CONTINGENCIES			129.31
			TOTAL 6.09 ROUNDED OFF			776

EP-7 (1.0)

EP-7

□□□□□□□□□□□□

□□□□□□□□□□□

JB-PAGES (2.0)

JOINT BID

NOTICE

THE PAGES CONTAINED IN THIS JOINT BID (JB-PAGES) REPRESENT ADDITIONAL CONTRACT REQUIREMENTS APPLYING TO WORK PERFORMED IN THE PRESENCE OF PRIVATELY OWNED UTILITY FACILITITIES.

(NO TEXT ON THIS PAGE)

[illegible]

[illegible]

[illegible]

The "JOINT BID WITH PRIVATE UTILITY COMPANIES SPECIAL PROVISIONS" [illegible] Appendix "C" [illegible]

6
6 – r r d r
6
6 6 – d rd r
6 6M – M d r M d d rd r d r
M d r r
6 6 M – d d M d r r
6 – d r d r r
6 – r d r r
– M d r r r r r
– M d r r r r r
00 M d r r r r r
0 M d r r r r r
0 – d d
r
0 – r r
00 – r r
006 – 0 0 – r r d r

The Private Utilities reference document called "
AND SKETCHES FOR LOWER MANHATTAN", dated August 1, 2005 d
r 0 M d 4 00 M 0 0 r
r d r r 0

r r

r r 4 r 400 d
r d r d
r 400 d

r dr
- r r d
- r d 6
- r 46
- r 4 6 r
- r 6 6 M 4
- r 66 r
- r 6 6 r
- r 6 4 d 6
- r 6 d
- r

0
0 0

[illegible] [illegible] [illegible] [

the following revised sentence: “Furnish controlled low strength material fill or of the Standard Highway Specification.”

City either in a Court of Law or the City’s contract dispute resolution board process; and to the each other, this legal action will be outside the jurisdiction of the City’s contract dispute

Notices to Bidders

communication cables, “Non Cost Sharing”

of identifying the lowest responsive and responsible bidder, a bidder’s unit prices bid shall be calculated on the City’s Specific Public Work Items and estimates and the Utilities’ Specific Utility Work Items and estimates.

[NO FURTHER TEXT HERE.]

□

Appendix "C"

Resolution of Certain Disputes Arising Between the Contractor and the Utilities

C.1.0 Applicability. In recognition of the usefulness of a process of alternative dispute resolution for its efficiency, speed and cost-effectiveness in managing conflict and settling disputes that may arise under, or by virtue of, these special provisions of Joint Bidding, the City and Utilities have agreed to the procedures set forth in this **Appendix "C**.**"** Accordingly, this **Appendix "C"** shall apply to disputes between the Contractor and the Utilities that arise under, or by virtue of, the provisions of this contract, which are set forth in pertinent part, below:

C.1.1 The Utilities' Responsibilities. If the Utility identifies an issue in the payment requisition for the Utility Work only, the Utility will immediately notify the City and the Contractor by a written notice. After sending such written notice, the Utility agrees to meet with the Contractor to resolve the issue. If the issue cannot be resolved, then the Utility or the Contractor shall seek to resolve the issue through the arbitration process as set forth herein.

C.1.2 If The Utility Determines That There Is No Extra Or Disputed Work. If the Utility determines that the alleged extra Utility Work or the disputed Utility Work is part of the City's contract documents and denies the Contractor's claim or request for a change order, then after receiving the Utility's written response, the Contractor shall either accept the Utility's determination or immediately seek to have the issue resolved through the arbitration process as set forth herein.

C.1.3 If The Utility Determines That There Is Extra Work. If the Utility determines that there is extra Utility Work, the extra Utility Work will be paid for based on the Unit Price Book and the Contractor's Multiplier. If all or a portion of the agreed upon extra Utility Work items are not in the Unit Price Book, then the Utility and the Contractor shall negotiate the cost of supporting and protecting and/or alleviating the impact on the Public Work caused by the extra or disputed Utility Work with each other with the understanding that the performance of Public Work shall continue during all negotiations and discussions. If the parties reach an agreement on cost for the extra or disputed Utility Work, then the Contractor and the Utility shall submit to the City's RE a copy of the agreed upon prices together with supporting documentation. If the parties do not reach an agreement on cost for the extra or disputed Utility Work, then the parties will immediately arbitrate the issue as set forth herein.

C.2.0 Joint Bid Projects. Disputes that arise under this Appendix, as described above in paragraph A.1.0, shall be resolved in accordance with the provisions of this **Appendix "C"**. **Appendix "C"** shall NOT apply to any disputes between the City and the Contractor, or any disputes between the City and the Utilities. Since the arbitration of Utility interference disputes, as described in Article A.1.0 above, is a matter solely between the Utilities and the Contractor, and since the parties agree to reduce or eliminate any costs to the City relating to any arbitration pursuant to this **Appendix "C"**, the parties hereby agree that:

C.2.1 The City shall not be a party in the arbitration process;

C.2.2 Neither the Contractor nor the Utilities shall call as a witness in the arbitration process any City employee, agent or consultant, including the City's RE, his staff or City inspection personnel;

C.2.3 The City shall not be responsible for any costs, fees or monetary awards or price adjustments associated in any way with the arbitration process described in this **Appendix "C"**; and

C.2.4 Notwithstanding Articles A.2.1 and A.2.2, the City's obligation to furnish information to the parties shall be limited to those requests as set forth under the New York State Freedom of Information Law, as amended.

C.3.0 Pre-Arbitration Procedures.

C.3.1 Should a dispute arise between any Utility and the Contractor pursuant to Article A.1.0 of this Appendix, the disputing party shall notify the City and the other party in writing within two (2) Business Days of the dispute that a dispute exists, and briefly describe; (i) the nature of the dispute; and (ii) the proposed resolution and rationale supporting its proposal.

C.3.2 After notifying the City of the dispute, the disputing parties shall have fifteen (15) Business Days to meet, discuss the issues, exchange documents and/or exchange offers with due diligence and in good faith in order to reach an agreement and resolve the dispute.

C.3.3. If the disputing parties reach an agreement, they shall immediately notify the City in writing that the dispute has been resolved and describe the terms of the resolution.

C.3.4 If the disputing parties have not reached an agreement within fifteen (15) Business Days of the date the City was first notified of the dispute, the Contractor shall, within five (5) Business Days thereafter, submit to the Utility a written Final Offer, which shall consist of: (i) a description (e.g., units and quantities) of all reasonable and necessary disputed work or extra work which the Contractor contends are not covered by application of the Unit Price Book and the Multiplier; and (ii) a detailed breakdown of the Contractor's proposed prices (e.g., unit prices and quantities) for such work.

C.3.5 Upon receipt of the Contractor's Final Offer, the Utility shall, within five (5) Business Days, either accept the Contractor's Final Offer or submit to the Contractor a written Final Offer which shall consist of: (i) a description (e.g., units and quantities) of all reasonable and necessary disputed work or extra work, if any; and (ii) a detailed breakdown of the Utility's proposed prices (e.g., unit prices and quantities) for such work, if applicable.

C.3.6 Once Final Offers have been exchanged by the parties, they may not be modified or withdrawn by either party except by mutual agreement or final settlement of the dispute.

C.3.7 Upon exchange of Final Offers, the Contractor shall have three (3) Business Days, to either accept the Utility's Final Offer or submit the dispute to the American Arbitration Association ("AAA") to be resolved in accordance with the Construction Industry Arbitration Rules ("Rules") in effect on the date the arbitration is initiated, except as such Rules are modified herein.

C.3.8 Each of the steps described above shall be a condition precedent to the obligations of the parties in succeeding steps. Since **Time is of the Essence**, should either party fail to comply with any of the pre-arbitration procedures described above, that party shall be deemed to be in default. If, upon receipt of written notice of default by the other party, the defaulting party has not cured the default within three (3) Business Days, the other party may proceed to arbitration solely on the issue of whether the defaulting party was in default of these pre-arbitration procedures. If, after hearing evidence, the arbitrator(s) determine that the defaulting party was in default of these pre-arbitration procedures, then the arbitrator(s) shall enter a final decision in favor of the other party in accordance with the Final Offer submitted by the other party or, if no Final Offer has been submitted prior to the default, according to the last written proposal submitted by the other party.

C.4.0 General Provisions.

C.4.1 The Utility agrees to pay for any disputed or extra Utility Work while the arbitration proceeding is pending based on the Utility's Final Offer.

C.4.2 All determinations by the parties required by this **Appendix "C"** shall be clearly stated, with a reasoned explanation for the determination based on the information and evidence presented to the party making the determination.

C.4.3 The Utility agrees to copy the City on all communications involving the arbitration process and to notify the City of the final determination.

C.4.4 The Utility agrees to pay the Contractor directly for any final settlement for extra Utility Work that may be agreed to by the Utilities and the Contractor or any final award for extra Utility Work issued by the arbitrator(s), less credits for any payments previously made by the Utility to the Contractor.

C.4.5 All of the contract defined terms shall apply here, as if they were re-stated herein.

C.4.6 Since **Time Is Of The Essence** on all Joint Bid Projects, whenever there is a dispute pursuant to this **Appendix "C"**, the terms of the City's Construction Contract shall remain in full force and effect, and the Contractor shall continue performing all of the City Work and the Utility Work as directed by the City.

C.4.7 The timeframes set forth herein have been established to ensure that the Joint Bid Project does not stop for any disputes between the Contractor and the Utility.

C.4.8 All of the timeframes are measured in Business Days, which include Monday, Tuesday, Wednesday, Thursday and Friday, but exclude holidays.

C.4.9 For all disputes that arise under **Appendix "C"**, the City's role shall be limited to receiving copies of all written communications.

C.4.10 The Contractor and all subcontractors hired by it agree to waive any rights they may have, if any, under law, equity, contract or otherwise to compel the City to assert any right the City may have, including the issuance of any directives or so-called "order outs" under the New York City Administrative Code, to require any or all of the Utilities to maintain, repair, replace, protect, support, shift, alter, relocate, and/or remove Utility facilities in connection with work to be performed under this contract. However, nothing in this Agreement shall preclude the City from exercising its rights under the law, including the right to issue such a directive to a Utility.

C.4.11 Each Utility shall be named as an additional insured on all insurance policies required to be maintained by the Contractor in connection with the Joint Bid Project. The actual incremental cost, if any, to the Contractor of providing such insurance coverage shall be borne by the Contractor. The Contractor shall provide a written statement from its insurance provider documenting the this added coverage to the Utility. Under no circumstances shall the cost of insurance coverage on behalf of the Utility be borne by the City. Nothing in this paragraph shall be interpreted to imply the City's acceptance of any additional responsibility or liability for any matter related to the performance of Utility Work. In particular, with regard to any Utility Work performed in accordance with or through this **Appendix "c"**, the Utility and the Contractor bear joint and full responsibility to ensure that any Utility Work performed by the Contractor is in compliance with all applicable government and Utility regulations.

C.5.0 <u>The Arbitration Procedures</u>.

C.5.1 Once the AAA has appointed an arbitrator(s), the arbitration shall be scheduled as promptly as possible given the arbitrator(s) and the parties' schedules.

C.5.2 No later than fourteen (14) calendar days prior to the first day of arbitration, the Utility and Contractor shall submit to the arbitrator(s), and to each other, a summary of each party's respective position, all documentary, photographic or physical evidence on which the party intends to rely, and such other information as is deemed appropriate, along with a copy of each party's "Final Offer" as described above.

C.5.3 The arbitration shall be conducted and concluded in two (2) days.

C.5.4 On the morning of the first (1st) day of the arbitration, Contractor and/or representatives shall have 3½ hours to make a presentation of its claim to the arbitrator(s). During its presentation, Contractor shall not be permitted to produce any evidence that has not already been provided to the Utility and the arbitrator(s) pursuant to Paragraph A.5.2, above. Contractor shall be permitted to produce any analysis or description of its claim that has been prepared for the purpose of its presentation.

C.5.5 After the Contractor's presentation, Utility and/or its representatives shall have 2 hours to ask the Contractor questions about its claim and its presentation. Thereafter, the arbitrator(s) shall have 2 hours to ask the Contractor questions about its claim and its presentation.

C.5.6 On the morning of the second (2nd) day of the arbitration, Utility and/or its representatives shall have 3½ hours to make a presentation of its claim to the arbitrator(s). During its presentation, the Utilities shall not be permitted to produce any evidence that has not already been provided to the Contractor and the arbitrator(s) pursuant to Paragraph A.5.2, above. The Utility shall be permitted to produce any analysis or description of its claim that has been prepared for the purpose of its presentation.

C.5.7 After the Utility's presentation, the Contractor and/or its representatives shall have 2 hours to ask the Utility questions about its claim and its presentation. Thereafter, the arbitrator(s) shall have 2 hours to ask the Utility questions about its claim and its presentation.

C.5.8 Subject to the above maximum time limitations set forth above, the arbitrator(s) may conduct the arbitration in such manner as the arbitrator(s) deems reasonable.

C.5.9 The arbitrator(s) shall then have one (1) week to select in writing, as the arbitrators' award, that party's Final Offer that appears to be more reasonable, based on the presentations at the arbitration hearings.

C.5.10 The arbitrator(s) shall have no discretion to grant an award other than one of the two (2) Final Offers submitted by the parties.

C.5.11 The arbitration award shall be final and binding upon the parties to the arbitration and judgment upon the award may be entered in a court having jurisdiction.A.5.12 Any award for work that has already been performed shall be paid on the 7th day after receipt of the arbitrator's decision, or on the 30th day after completion of the work, whichever is later. Payment for work not yet completed at the time of the arbitrator's decision shall be paid within thirty (30) calendar days of completion of work. Interest shall accrue from the date payment is due at the rate of nine (9%) percent per annum. Either party may cause judgment to be entered in accordance with the decision of the arbitrator(s) in a court in the State of New York, County of New York.

C.5.13 The Utility and the Contractor initially shall share the arbitrator's(s') fees and any other costs of the arbitration equally. The non-prevailing party shall then pay all arbitrator's(s') fees and costs of the arbitration and shall reimburse the prevailing party for its share of such fees and costs theretofore paid.

C.5.14 The parties may, at any time, settle any matter submitted to arbitration.

C.5.15 Since **Time is of the Essence**, should any party, at any time after the dispute has been submitted for arbitration, materially fail to comply with: (i) the Rules, (ii) any of these arbitration procedures, or (iii) any procedural decisions by the arbitrator(s), then the arbitrator(s) shall enter an order directing the party to cure its non-compliance within five (5) Business Days. If the party shall fail to comply with the order of the arbitrator(s) order within the five (5) Business Days, upon receipt of evidence that the non-complying party has failed to comply with the arbitrator's(s') order, the arbitrator(s) shall enter a final decision in favor of the other party in accordance with the other party's Final Offer.

[NO FURTHER TEXT HERE.]

“SPECIAL PROVISION FOR SANDRESM1”

conEdison

Guideline Document for Public Improvement

CONST- 029 Revision Number 4

Purpose:	To update the Public Improvement Contractor Guideline document for safe entry into Sub-Surface Structures and moving energized underground cables.		
Revision Date:	7-30-2020	Next Revision Due Date:	7-30-2022
Supersedes Date:	6-30-2018	Revision Cycle Period:	Once every 2 years

TYPE	NAME	DATE
EH&S	Glenn D. Newell	7/30/2020
Technical	Joseph Bedell, Joseph Bedell Jr. John Stefandl & Marlon Kalloo	7/30/2020
Legal	Inna Rozenberg	7/30/2020

Summary of Changes:

1. Updated Reference Section to Include OSHA 1926 Subpart V
2. Removed Section on Moving Energized U.G. Cables Located Inside Sub-Surface Structures. (Previously Section 4.0 in Revision 3)
3. Updated/Revised Sections 1.4, 2.1, 2.2.2, 3.4, 3.6, 3.8, 3.9, 4.5.5, 4.7 & 4.7.1
4. Added New Section 4.5.4 – HDPE Conduit
5. Added New Chapter 5.0 – Breaking Out a Point of Entry (POE)

Training Requirements - N/A

DOJT/Course #, etc. Associated with this Operating Document:

None

Subject Matter Expert:	Marlon Kalloo	Approved Date:	7/30/2020
Approver Name:	Theresa Kong	Approved Date:	7/30/2020

Paper copies of Operating Documents are uncontrolled and therefore may be outdated. Verify current version prior to use.

Consolidated Edison Company of New York, Inc.

Guideline

For

Safe Entry into Sub-Surface Structures (Electrical Enclosed Space),

Moving Energized Underground Cables

Removal of Conduit from Cables, and

Breaking Point of Entry (POE's) Into Sub-Surface Structures

Performed by

Municipal Contractors

TABLE OF CONTENTS:

1.0 – Definitions
- 1.1 - Competent Person
- 1.2 - Attendant
- 1.3 - Electrical Enclosed Space
- 1.4 - CET Specification
- 1.5 - JB Specification
- 1.6 - Public Improvement Representative
- 1.7 – Municipal Contractor
- 1.8 - Electrically Competent Qualified Municipal Contractor

2.0 - References
- 2.1 – OSHA Sections 1910.269 & 1926 Subpart V
- 2.2 - Training
  - 2.2.1 – Electrically Competent Qualified Municipal Contractor
  - 2.2.2- Municipal Contractor Employee

3.0 - Safe Entry into Sub-Surface Structures, (Electrical Enclosed Space)
- 3.1 - Purpose
- 3.2 - Application
- 3.3 - Guideline
- 3.4 - Inspection / Testing
- 3.5 - Job Briefing
- 3.6 - Attendants
- 3.7 - Hazardous Atmosphere
- 3.8 - Personal Protective Equipment
- 3.9 – Con Edison's Personal Protective Equipment Guideline
- 3.10 - Access

4.0 - Removal of Conduit from Cables and Moving Energized Underground Cables Located Outside of Subsurface Structures
- 4.1 – Purpose
- 4.2 – Application
- 4.3 – Guideline
- 4.4 – Job Briefing
- 4.5 - Removal of Conduit from Cables
  - 4.5.1 - Pre-cast Concrete Conduit
  - 4.5.2 - Concrete Encased Conduit
  - 4.5.3 - Wooden Conduit
  - 4.5.4 – HDPE Conduit
  - 4.5.5 – Metal Conduit
- 4.6 - Visual Inspection
- 4.7 - Cable Moving Operations
- 4.7.1 - Personal Protective Equipment

5.0 - Breaking Out a Point of Entry (POE's) in an Electrical Enclose Space
- 5.1 – Activities Prior to creating POE's
- 5.2 – Creation of POE Operations

1.0 Definitions

1.1 Competent Person- As a general rule, a Competent Person is an individual who, by way of training and/or experience, is knowledgeable of OSHA and other applicable standards, is capable of identifying workplace hazards relating to the specific operation, and is designated by the employer with the authority to take all appropriate actions necessary to comply with all applicable standards and properly address hazards. Some OSHA standards add additional specific requirements that must be met by the Competent Person.

1.2 Attendant - An authorized individual who is stationed outside a sub-surface structure or an Electrical Enclosed Space to monitor the authorized entrants and to perform duties assigned including providing assistance to individual inside the sub-surface structure or Electrical Enclosed Space.

1.3 Electrical Enclosed Space – OSHA defines an Electrical Enclosed Space as a working space, such as a manhole, vault, tunnel, service box, or shaft, used for the operation and maintenance of electric power generation, transmission, and distribution lines and equipment. An Electrical Enclosed Space has a limited means of egress or entry, and is designed for periodic entry under normal operating conditions. Under normal conditions, an Electrical Enclosed Space does not contain a hazardous atmosphere, but may contain a hazardous atmosphere under abnormal conditions.

1.4 CET Specification – CET Specification defining private utility work within Municipal Construction Contracts.

1.5 JB Specification – Joint Bid specification defining private utility work within a NYC DDC Capital contract.

1.6 Public Improvement Representative - Con Edison employee, (Inspector, Construction Representative, Chief Construction Inspector, Project Specialist, or Manager) assigned to the Public Improvement section.

1.7 Municipal Contractor – Construction municipal contractor performing work for Municipal, State or other Public Agencies or Authorities.

1.8 Electrically Competent Qualified Municipal Contractor - is a Municipal Contractor employee designated and documented by the Municipal Contractor employer, in writing, as the electrically competent and qualified person who, by way of training and/or experience has the skills and techniques necessary to distinguish exposed live parts from other parts of electrical equipment, can identify non-insulated conductors from insulated conductors and/or cables and has the knowledge of the precautionary techniques, personal protective equipment, insulating and shielding materials, and insulated tools that are required for working on or near exposed energized electrical equipment. The Electrically Competent Qualified Municipal Contractor employee is capable of identifying varying workplace electrical hazards relating to the specific operation and has the authority to take appropriate actions, as required. In order to meet the task specific qualifications of this guideline, the Electrically Competent Qualified Municipal Contractor employee must be familiar with this document and be able to demonstrate adherence.

2.0 References

2.1 **OSHA Section 1910.269 –** Electric Power Generation, Transmission & Distribution **& 1926 Subpart V –**Electric Power Transmission and Distribution

2.2 **Training-** The OSHA Office of Training and Education (OTE) develops, directs, oversees, manages and ensures implementation of OSHA's national training and education policies and programs in support of OSHA's strategic goals with the objective of reducing occupational hazards through direct intervention, promoting a safety and health culture through compliance assistance, cooperative programs and strong leadership and maximizing OSHA effectiveness and efficiency by strengthening capabilities and infrastructure.

All Municipal Contractor employees shall be trained in and familiar with the safety-related work practices, safety procedures, and other safety requirements in section 1910.269(a)(2) and 1926 Subpart V that pertains to the Municipal Contractor employees' respective job assignments. Municipal Contractor employees' shall also be trained in and familiar with any other safety practices, including emergency procedures, such as manhole rescue, that are not specifically addressed by this referenced section but that is related to their work and is necessary for their safety.

Con Edison manhole inspection and underground awareness training can be scheduled through the Con Edison TLC upon request of the municipal contractor. OSHA 10 certification cards and CPR / First Aid training are prerequisites.

2.2.1 Electrically Competent Qualified municipal contractors shall also be trained and competent in:

a- The skills and techniques necessary to distinguish exposed live parts from other parts of electrical equipment

b- The skills and techniques necessary to determine exposed live parts from other parts, (determination of non-insulated conductors from insulated conductors / cables).

c- The knowledge of the precautionary techniques, personal protective equipment, insulating and shielding materials, and insulated tools that are required for working on or near exposed energized parts of electrical equipment. Generally, the Municipal Contractor will not be required to work on or near exposed/non-insulated energized parts of electrical equipment or cables. In the event special conditions exist requiring working near exposed/non insulated energized parts of electrical equipment or cables, the Municipal Contractor shall cease working and immediately contact the authorized Con Edison Inspector so that a further assessment of the condition can be evaluated, and appropriate guidance provided.

d- The Electrically Competent Qualified Municipal Contractor employee shall determine, through regular supervision and through inspections conducted on at least an annual basis that each Municipal Contractor employee is complying with the safety-related work practices outlined in this guidance document.

2.2.2 A Municipal Contractor employee shall receive additional training (or retraining) by the Electrically Competent Municipal Contractor under any of the following conditions:

a- If the Electrically Competent Qualified Municipal Contractor employee indicates that the Municipal Contractor employee is not complying with safety-related work practices

b- If new technology, new types of equipment, or changes in procedures necessitate the use of safety-related work practices that are different from those which the Municipal Contractor employee would normally use

c- If the Municipal Contractor employee must employ other safety-related work practices that are not normally used or that require modification from those stated in this guidance document

Note: OSHA requires retraining before commencing with a task that has not been performed within one year.

The required training shall be of the classroom and/or on-the-job type. The training shall establish Municipal Contractor proficiency in the work practices required and shall introduce the procedures necessary for compliance. The Electrically Competent Qualified Municipal Contractor shall certify that each Municipal Contractor employee has received the training required and retains records of this training to be supplied upon request by Con Edison.

3.0 Safe Entry into Sub-Surface Structures, (Electrical Enclosed Space)

3.1 **Purpose:** To establish a guideline that shall be employed for safe entry into Con Edison sub-surface structures by Municipal Contractors.

3.2 **Application:** Municipal Contractor personnel

3.3 **Guideline:** This guideline provides the requirements for practices that shall be employed for safe entry into Con Edison sub-surface structures. Municipal Contractor personnel requiring entry into Con Edison sub-surface structures shall adhere to this guideline.

3.4 Inspection/Testing

Prior to entry into a Con Edison sub-surface structure, properly trained and qualified Con Edison electrical personnel must conduct an inspection. The assessment will determine if the condition of the electrical facilities contained therein is sufficient to allow need based unrestricted access. Con Edison electrical personnel shall validate that the Con Edison sub-surface structure inspected is approved for need based unrestricted access. The Con Edison Inspector shall communicate and document to an Electrically Competent Municipal Contractor personnel any safety precautions to be taken and that the subsurface structure is safe for entry. Any condition deemed to be un-safe through this formal inspection process would preclude granting access.

An inspection must take place daily prior to Municipal Contractor entry. Once the cover is placed on the electric subsurface structure another inspection must occur prior to Municipal Contractor entry. Inspections include but are not limited to:

1) Testing for stray voltage by a qualified Con Edison employee or qualified Municipal Contractor employee.

2) Completion of atmospheric testing.

3) Determination that it is safe to enter the space.

4) A visual inspection for any abnormalities previously defined.

5) Communication of inspection results and hazards to the Con Edison inspectors and the municipal contractor supervisor.

3.5 Job Briefing

The Electrically Competent Qualified Municipal Contractor in charge shall conduct a job briefing with the municipal contractor's employees involved before they start the job. The briefing shall cover: the hazards associated with the job; work procedures involved; special precautions; and personal protective equipment requirements. The Electrically Competent Qualified Municipal Contractor shall instruct that all cables are to be treated as energized. Additional briefings shall be held if significant changes, which might affect the safety of the municipal contractor's employees, occur during the course of the work. The Electrically Competent Qualified Municipal Contractor shall document completion of the job briefing. A copy of the documented job briefing should be available upon request by Con Edison.

3.6 Attendants

While work is performed in a Con Edison sub-surface structure, a Municipal Contractor Attendant shall be available in the immediate vicinity to render emergency assistance. Sub-surface structure Attendants shall comply with applicable OSHA requirements.

3.7 Hazardous Atmosphere

Municipal Contractor personnel shall perform a hazardous atmosphere test before entry into any Con Edison sub-surface structure and perform continuous air monitoring in compliance with applicable OSHA requirements. Any atmospheric reading deemed to be un-safe would prohibit access to the structure. The Municipal Contractor shall immediately notify the authorized Con Edison Inspector.

3.8 Personal Protective Equipment

Municipal Contractor personnel requiring entry into Con Edison sub-surface structures shall refer to and comply with applicable OSHA requirements regarding the use of Personal Protective Equipment when performing this work. In addition, Con Edison is requiring that Municipal Contractor personnel assigned to work inside Con Edison sub-surface structures shall at all times wear Flame Resistant (FR) Clothing with a rating of 8 cal/cm^2 or HR2, a retrieval harness and that a retrieval device be on location. In addition, an atmospheric tester

must be in use continuously anytime a structure is occupied. See section 3.9 for Matrix on Con Edison's Personal Protective Equipment Guideline.

3.9 Con Edison Personal Protective Equipment Guideline

	Task	Class 0 Gloves	FR Clothing	FR Hood	Blast Goggles	Face Shield	Safety Glasses
1	Pavement breaking	N	N				Y
2	Breaking out concrete encased duct	Y	Y				Y
3	Moving energized primary cables that are located outside a structure while in proximity to joints	Y	Y	Y	Y		
4	Moving primary cables outside a structure (no joints involved)	Y	Y				Y
5	Moving energized secondary cables	Y	Y				Y
6	Hand excavate to locate precast ducts	N	N				Y
7	Hand excavate to locate direct buried cables	Y	Y				Y
8	Removing cable from conduit	Y	Y				Y
9	Breaking structure for POE from outside/inside	Y	Y			Y	Y
10	Breaking sub-structure walls	Y	Y				Y
11	Pulling rope within structure with energized cable	Y	Y				Y
12	Pulling rope in enclosed spaces	Y	Y				Y
13	Building a bench or platform within a subsurface structure to support or protect cables.	Y	Y				Y
14	Breaking out unknown precast electric duct	Y	Y				Y
15	Using digging bar over electric facility	Y	N				Y
16	Using digging bar over direct buried cables	Y	Y				Y
17	Using Pneumatic clay digger in vicinity of electric facility	Y	Y				Y
18	Installing forms for field-constructed sub-surface structures from inside the designed footprint when connected cables are present	Y	Y				Y
19	Installing forms for field-constructed subsurface structures from outside the designed footprint when connected cables are present	N	N				Y
20	Installing forms for field-constructed subsurface structure prior to first energization of new cables	N	N				Y
21	Saw cutting operation	Y	N				Y
22	Hand excavate to locate cable fault	Y	Y				Y
23	Hand excavating to find service dead leg	Y	Y				Y
24	Removing underground silo	Y	Y				Y
25	Regrade	Y	N				Y
26	Build/remove shunt box w/ energized cable inside	Y	Y				Y

3.10 Access

Municipal Contractor personnel shall not climb into or out of Con Edison sub-surface structures by stepping on cables or hangers.

4.0 Removal of Conduit from Cables and Moving Energized Underground Cables Located Outside of Subsurface Structures

4.1 Purpose: Establish a guideline that shall be employed by Electrically Competent Qualified Municipal Contractor personnel, meeting OSHA training requirements, when removing conduit from cables and moving Con Edison energized underground cables located outside structures.

4.2 Application: Municipal Contractor personnel

4.3 Guideline: This guideline details the requirements for practices that shall be employed when moving Con Edison energized underground cables located outside of Con Edison structures. Movement of energized cables on the Con Edison system shall be performed in accordance with the following directions. Only Electrically Competent Qualified Municipal Contractor personnel who been trained and meet necessary OSHA requirements for moving energized underground cables and in accordance with the following directions shall perform movement of energized cables on the Con Edison system.

4.4 Job Briefing

The Electrically Competent Qualified Municipal Contractor in charge shall conduct a job briefing with the Municipal Contractor's employees involved before they start the job. The briefing shall cover: the hazards associated with the job; work procedures involved; special precautions; and personal protective equipment requirements. The Electrically Competent Qualified Municipal Contractor shall instruct that all cables are to be treated as energized. Additional briefings shall be held if significant changes, which might affect the safety of the Municipal Contractor's employees, occur during the course of the work. The Electrically Competent Qualified Municipal Contractor shall document completion of the job briefing.

4.5 Removal of Conduit from Cables

All subsurface electric cable systems and related components shall be considered energized. Caution shall always be employed whenever conduits are opened to expose the interior cable.

4.5.1- Pre-cast Concrete Conduit

a- The conduit shall be fractured by striking the top end corner of the conduit with a 3 lb. hammer equipped with a non-conductive handle. When fracturing the conduit, all impact/chipping action shall be performed in such a manner so as to be directed across the top of the conduit away from any cable that may be inside of the conduit.

b- A small piece of the concrete conduit shall be chipped away so that a visual examination of the interior of the conduit can be made to verify the presence of cable. All impact/chipping actions shall be performed in such a manner so as to be directed across the top of the duct, away from the cable.

□□□□□□□□□□0□□

□□□□□□□□□□□□□□□□0□0□

□□□0□

c- If cable is present, concrete-chipping operations shall continue until enough material has been removed to permit insertion of a non-conductive protective shield barrier between the conduit and cable or as directed by the authorized Con Edison Inspector based on existing field conditions. Material such as exterior grade plywood or lumber (min. thickness ¾") or suitably reinforced plastic sheet material (min. thickness 0.060" – e.g. Norplex Micarta RT504 NEMA Grade G-3) shall be used for this purpose. This shield material shall provide protection for the cable during the remaining conduit removal operations. The remainder of the conduit shall be fractured using the 3 lb. hammer equipped with a non-conductive handle. Care shall be taken so as to avoid any impact upon the cable, either by direct or indirect hammer blows.

d- During and after conduit removal operations, cable/conduit shall be properly supported as indicated in Section 5.7, below.

4.5.2 - Concrete Encased Conduit

a- The concrete encased conduit (including but not limited to pre-cast, fiber, tile, clay), shall be fractured by striking the top end corner of the conduit with a 3 lb. hammer equipped with a non-conductive handle. When fracturing the conduit, all impact/chipping action shall be performed in such a manner so as to be directed across the top of the conduit away from any cable that may be inside of the conduit.

b- For concrete encased conduit, it may be necessary to employ a handheld cold chisel (in conjunction with the 3 lb. hammer) to remove concrete encasement. If a chisel is utilized, all impact/chipping actions shall be performed in such a manner so as to be directed across the top of the duct, away from the cable.

c- If the concrete encasement is so dense as to render the use of a hammer and handheld chisel non-effective, an 8-pound sledgehammer may be employed. If neither of these devices proves effective, the use of a pneumatic chipping hammer will be permitted. The weight/size of the pneumatic chipping hammer shall not exceed 20 lbs. When utilizing a pneumatic chipping hammer, the device shall be securely positioned and be under close operator control at all times. The tool bit used for these operations shall be chisel shaped with a minimum width of two (2") inches. All impact/chipping actions shall be performed in such a manner so as to be directed across the top of the duct, away from the cable.

d- A small piece of the concrete conduit shall be chipped away so as to permit verification of the presence of cable inside the conduit.

e- If cable is present, concrete-chipping operations shall continue until enough material has been removed to permit insertion of a non-conductive protective shield barrier between the conduit and cable or as directed by the authorized Con Edison Inspector

based on existing field conditions. Material such as exterior grade plywood or lumber (min. thickness ¾") or suitably reinforced plastic sheet material (min. thickness 0.060" – e.g. Norplex Micarta RT504 NEMA Grade G-3) shall be used for this purpose. This shield material shall provide protection for the cable during the remaining conduit removal operation.

f- After installation of the shield material has been completed, continue removal of remaining conduit and encasement, using handheld and power tools.

g- During and after conduit removal operations, cable/conduit shall be properly supported as indicated in Section 5.7, below.

4.5.3 – Wood Conduit

a- Wooden conduit shall be split using a handheld cold chisel and a 3 lb. hammer equipped with a non-conductive handle. All impact/chipping action shall be performed in such a manner so as to be directed across the top of the conduit away from the cable.

b- The chisel shall use to create a small window in the conduit that will permit a visual inspection of the conduit interior for the presence of cable.

c- If cable is present, wood conduit material shall continue to be removed until enough material has been removed to permit insertion of a non-conductive protective shield barrier between the conduit and cable or as directed by the authorized Con Edison Inspector based on existing field conditions. Material such as exterior grade plywood or lumber (min. thickness ¾") or suitably reinforced plastic sheet material (min. thickness 0.060" – e.g. Norplex Micarta RT504 NEMA Grade G-3) shall be used for this purpose. This shield material shall provide protection for the cable during the remaining conduit removal operation.

d- After installation of the shield material has been completed, continue removal of remaining conduit

e- During and after conduit removal operations, cable/conduit shall be properly supported as indicated in Section 5.7, below.

4.5.4 – HDPE Conduit

a- HDPE conduit shall be split using hand tools or a handheld pneumatic rotary cutting tool. All splitting/cutting actions shall be performed in such a manner so as to be directed across the top of the duct, away from the cable.

b- Pneumatic Rotary Cutting Tool – A pneumatic rotary cutting tool shall be used to score an access area in the surface of the conduit., Prior to application of the cutting tool to the surface of the

conduit, the depth collar on the pneumatic rotary cutting tool shall be set so that the cutting bit will penetrate approximately ¾ of the wall thickness of the conduit. After the conduit has been cut to the maximum depth allowable (such that the bit does not fully penetrate the thickness of the conduit), a 3 lb hammer shall be used to knock out the access area (window) outlined by the cutting tool. This will permit visual inspection of the conduit interior for the presence of cable.

c- If inspection of the interior of the conduit reveals that cable is present, a non-conductive protective shield barrier shall be inserted into the conduit between the conduit and cable. This shield material shall provide protection for the cable during the remaining conduit removal operations. Material such as exterior grade plywood or lumber (min. thickness ¾") or suitably reinforced plastic sheet material (min. thickness 0.060" – e.g. Norplex Micarta RT504 NEMA Grade G-3) shall be used for this purpose. This shield material shall provide protection for the cable during the remaining conduit removal operations.

d- If inspection of the conduit interior does not reveal the presence of cable, the remaining conduit may be removed using the tool choices mentioned in 4.5.4.a.

4.5.5 - Metal Conduit

a. When removing metal conduit, the Municipal Contractor should first excavate and expose a collar connecting two sections of conduit. Once the collar is accessible, split and/or cut the collar off to inspect the conduit interior for the presence of cable. If a metal conduit collar is NOT easily accessible, or found within 20 to 40 feet of open excavation, proceed to section 4.5.5.b. Note: If the work to be performed is in response to a suspected natural gas leak or in the presence of natural gas, only the use of non-powered hand tools is allowed. Further guidance will be provided by Gas Engineering.

b. If a collar connecting two sections of conduit cannot be found, metal conduit will be split using hand tools and/or a handheld rotary cutting tool. All splitting actions will be directed across the top of the conduit, away from the cable. Note: If the work to be performed is in response to a suspected natural gas leak or in the presence of natural gas, only the use of non-powered hand tools is allowed. Further guidance will be provided by Gas Engineering.

c. Score the outline of an access area onto the surface of the conduit. Do not fully penetrate the conduit with the tool while making this outline.

d. Use this outline as a guide for further splitting and cutting operations that will eventually create a viewing window into the conduit.

□□□□□□□□□□0□□

□□□□□□□□□□□□□□□□0□0□

□□□□□□

e. If inspection of the conduit interior reveals the presence of cable, insert a non-conductive protective barrier between the cable and conduit wall. The barrier will provide physical protection for the cable during remaining conduit removal operations. Materials including, but not limited to, exterior grade plywood, lumber, and Norplex Micarta are acceptable. After the installation of the non-conductive protective barrier, the removal of the remaining conduit may proceed using the tool choices mentioned in section 5.5.4b.

f. If inspection of the conduit interior does not reveal the presence of cable, the remaining conduit may be removed using the tool choices mentioned in section 4.5.5b.

4.6 Visual Inspection

a- A visual inspection of cables located outside Con Edison structures that will be moved, shall be performed by Electrically Competent Qualified Municipal Contractor personnel or the authorized Con Edison Inspector.

b- After the conduits have been broken out (removed from the cables), the exposed cable(s) shall be inspected by the Electrically Competent Qualified Municipal Contractor personnel.

c- The cables shall be visually inspected by the Electrically Competent Qualified Municipal Contractor personnel, and determined to be free from any of the defects that would prevent relocation. Cable(s) shall be free of cracks, tears, and evidence of oil stains, swelling, or melting of the insulation. Cables shall not have any exposed conductor.

4.7 Cable Moving Operations – Outside Structures

a- Prior to moving any cables outside of a subsurface structure, the cables located within the associated connecting subsurface structures shall be inspected in accordance with the guideline requirements for moving cables within Con Edison sub-structures.

b- Municipal Contractor personnel experienced in moving Con Edison cables only shall move cables.

c- Cables shall not be moved until plastic "fair-leaders" are positioned at the duct edges to prevent chaffing damage.

d- Synthetic web slings having a minimum width of two (2) inches shall support cables that have been removed from conduit. Slings shall be used in a basket hitch configuration.

e- Conduits housing cables shall be supported using slings, cable, or rope. Conduits shall be supported in such manner as to maintain alignment with one another.

f- Maximum distance between support points shall be four (4) feet.

g- To prevent inadvertent over bending of the cables, the maximum vertical or horizontal offset between supports shall be one foot (1') for cable that is supported outside of conduit. For cable that is being moved while still installed in conduit, the conduit shall not be offset more than one foot per four-foot section of conduit.

h- Each set of cables (cables from one duct/conduit) shall be moved individually. Cables from multiple ducts/conduits shall not be moved as a bundle.

i- Relocation of cables shall be performed in a careful manner with the movement of cable under complete control at all times. There shall be no sudden movements of the cable or the conduit that contains cable.

j- An observer shall be positioned so as to determine proper slack in structures and to ensure that joints remain properly supported on rack arms and specified offsets are maintained. This observation shall be performed from outside of the structure while the cable is being moved.

k- Allowable horizontal and vertical offsets shall be determined based on applicable CET or JB item sketches and/or as directed by the authorized Con Edison Inspector.

l- Cables shall not be permitted to fall freely from temporary supports.

m- All cables supported by slings shall be visually inspected at the beginning and end of each work shift to ensure that no cracks, leaks, or other defects have developed.

n- Cables shall be repositioned with care when being moved into their final position for the installation of split conduit.

4.7.1 Personal Protective Equipment

Municipal Contractor personnel moving Con Edison energized cables shall refer to and comply with applicable OSHA requirements regarding the use of Personal Protective Equipment when performing this work. See Section 3.9 for Matrix on Con Edison's Personal Protective Equipment Guideline.

5.0 Breaking Out a Point of Entry (POE's) in an Electrical Enclosed Space

5.1 Activities Prior to creating POE's

5.1.1 Prior to creating POE's, the location of all conduit and cable passing through the section of the wall shall be visually identified and protected inside structure.

5.1.2 If any cables are required to be moved prior to creation of a POE, they shall be moved by properly trained and qualified Con Edison electrical personnel.

5.2 Creation of POE Operations

5.2.1 Using caution, expose the exterior section of the wall that you intend to create the POE (typically done in 2' – deep vertical sections) by carefully excavating on the outside of the structure.

5.2.2 When there is a potential for contact between the existing cables that have been visually identified and the tool being used to break out the POE, protect the cables using fire rated wood, phenolic board, cable shields or other acceptable non-conductive materials. Along with protecting the cable from coming in contact with the implement being used for breaking, cables on the walls in the POE area shall also be protected from falling debris using FR wood even if there is no potential for contact with said cables.

5.2.3 Once the following conditions have been satisfied:

5.2.3.1 Location of cables inside the structure and the associated conduit outside have been verified.

5.2.3.2 Protection of cable on both the inside and the outside of the structure walls

5.2.3.3 Structural integrity of the proposed POE area has been confirmed using hand tools

Then use the appropriate tool (up to and including a 90 lb. jackhammer) to create the POE on the section of structure wall that was previously prepared.

5.2.4 If a jackhammer is being used for the POE breakout operation, where feasible, support the tool from underneath to prevent slippage.

5.2.5 Where possible, the use of a 90 lb. jackhammer shall be avoided within 8" of a live conduit. If the competent person determines that the breakout can only be made using a jackhammer within 8" of live conduit, a physical barrier must be placed between the jackhammer and all facilities that could possibly come in contact with the jackhammer. The Municipal Contractor may then begin utilizing the 90 lb. jackhammer using a 3" bit or wider.

CONSOLIDATED EDISON COMPANY OF NEW YORK, INC.
4 IRVING PLACE
NEW YORK, NEW YORK 10003

ENGINEERING INSTRUCTION

CE-SI-1080

Guidelines for Protecting Existing Underground Transmission Electric Facilities from Nearby Construction Activities

REVISION 01

SEPTEMBER, 2018

Prepared By:	Jungmin Lee Hou	9/25/2018
	Civil Engineering – Engineer	Date
EH&S Review By:	Walter Stepien	8/16/2018
	EHS Design Engineering	Date
Civil Engineering		
SME Concurrence By:	Mun Lai Wong	9/18/2018
	Civil Engineering – Senior Engineer	Date
Transmission Operations		
SME Concurrence By:	Vernon Schaefer	9/19/2018
	Transmission Operations – Project Manager	Date
Transmission Engineering		
SME Concurrence By:	Arie Makovoz	9/20/2018
	Transmission Operations – Technical Expert	Date
Approve By:	Tom Villani	9/24/2018
	Transmission Engineering – Section Manager	Date
Approve By:	Michael Nuzzi	8/14/2018
	Civil Engineering – Section Manager	Date
Effective Date:	9/25/2018	

Paper copies of the Engineering Operations Manual are uncontrolled and therefore may be outdated. Please verify that you have the current version prior to use by viewing the Central Engineering website (http://ceng/).

TABLE OF CONTENTS

SECTION	SUBJECT	PAGE
1.0	SCOPE	3
2.0	DEFINITIONS	3
3.0	INSTRUCTIONS	4
4.0	EXHIBITS	11
5.0	REFERENCES	12

Paper copies of the Engineering Operations Manual are uncontrolled and therefore may be outdated. Please verify that you have the current version prior to use by viewing the Central Engineering website (http://ceng/).

SECTION I – GENERAL REQUIREMENTS

1.0 SCOPE

The scope of this document is a general guideline for the prevention of damage to high pressure pipes and coating for underground 69, 138 and 345 kV cable systems (electric facilities), caused by construction on *("outside plant")* properties not owned by CECONY. The guideline provides information such as:

a) general instructions *and notification requirements* prior to any construction activities;
b) clearance requirements;
c) precautions/protections to be made; and
d) special notes during construction activities

The guideline is not applicable for solid dielectric or self-contained oil-filled cables. Specific work plans for these type of Transmission Feeders shall be reviewed with Con Edison for approval.

1.1 APPLICATION

This instruction applies to all Consolidated Edison Company of New York, Inc. (CECONY) organizations and contractors, and outside "third party" organization with oversight responsibility for municipal public improvement contractors and non-municipal contractors, commencing or engaging in underground construction activities associated with excavations, foundations, and demolitions within the vicinity of CECONY's existing underground transmission system.

2.0 DEFINITIONS

2.1 **CECONY** refers to Consolidated Edison Company of New York, Inc.

2.2 **Contractor** is the construction firm hired by the Property Owner or Project Manager to perform the construction services.

2.3 **Designated Contact** is the contact person identified within the Project Manager Company and the Property Owner who has the responsibility to communicate on all of the planned construction works to be carried out safely.

2.4 **Encroachment Area** is the area where the ground disturbance occurs within 25 feet on land of the centerline of the *Assumed* Location of the existing electric facilities.

2.5 ***Assumed*** **Location** is the location of underground facilities determined from the subsurface investigations, *such as record drawings or utility mark outs on streets.*

2.6 ***Known Location is the Assumed Location that is visually confirmed from hand dug test holes. Both horizontal and vertical locations of underground facilities shall be field verified at, (a) every proposed crossings, (b) every turn in direction, and (c) a minimum of two locations along a straight run of the existing Transmission Electric Facilities. A use of vacuum excavations is an acceptable means of***

Paper copies of the Engineering Operations Manual are uncontrolled and therefore may be outdated. Please verify that you have the current version prior to use by viewing the Central Engineering website (http://ceng/).

□□□□□□□□□□0□□

□□□□□□□□□□□□□□□□0□0□

□□□□□□

exposing underground facilities.

2.7 **Professional Engineer** is the engineer, currently licensed in New York State, hired by the Property Owner or Contractor to perform the engineering/design services.

2.8 **Property Owner** is the entity that has legal jurisdiction or ownership of the work area or new facility being installed.

2.9 **Tolerance Zone** is the area in which soil must be removed by non-mechanical means, such as hand excavations methods, to expose subsurface utilities *in absence of test pits.* It is *2-ft clear distance on both sides* of *the Assumed Locations and the width of the existing Transmission Electric Facilities*.

2.10 **Trained Personnel** refer to someone who is capable of identifying existing and predictable hazards in the surroundings or working conditions, has authorization to take prompt corrective measures to eliminate the hazards, and is trained and experienced in utility installation and inspection.

2.11 **Transmission Electric Facilities** refer to underground transmission feeders *69kV and higher* and associated circulation piping.

2.12 **Wingback** is the required longitudinal distance of a pipe to be exposed by excavation in order to achieve the desired relocated position.

3.0 INSTRUCTIONS

3.1 GENERAL INSTRUCTIONS

3.1.1 Follow the requirements outlined in the State of New York Department of Public Service NYCRR 16 Part 753, "Protection of Underground Facilities".

3.1.2 *Perform subsurface investigations and mark-outs prior to planning and performing any work in the Encroachment Area of the underground Transmission Electric Facilities.*

3.1.3 Mark-outs of the *Assumed* Locations of the underground facilities must be refreshed periodically, by the Contractor, to ensure underground facilities locations are always clearly identified over the entire project duration. If at any time the underground facilities marks become illegible, work must be stopped until the locations can be re-identified.

3.1.4 Contractor shall provide proper support of all *exposed* Transmission Electric Facilities during excavation activities.

3.1.4.1 A work plan, including pipe support design and calculations, shall be submitted to CECONY Engineering for approval, at least two weeks prior to performing any work in the Encroachment Area of the electric facilities. Refer to section 3.4 for pipe support design criteria.

3.1.4.2 *For management of excavated soils, refer to section 3.5, "Backfill".*

Paper copies of the Engineering Operations Manual are uncontrolled and therefore may be outdated. Please verify that you have the current version prior to use by viewing the Central Engineering website (http://ceng/).

□□□□□□□□□□0□□

□□□□□□□□□□□□□□□□0□0□

□□□0□

3.1.4.3 CECONY Transmission Operation shall review the work plan on an as-needed basis and shall inspect the work area for pipe support, moving process and coating conditions prior to backfill.

3.1.4.4 The approved work plan shall be obtained by the Contractor prior to commencement of any work.

3.1.5 ***In absence of test pits, excavation within the Tolerance Zone shall be performed by hand only. Saw-cutting pavements within the Tolerance Zone is allowed with blade depths less than the confirmed asphalt pavement thickness***.

3.1.6 ***For Known Locations, a zone of protection shall be established by shielding the exposed facilities from damage that could result from falling debris, i.e. rocks, concrete, compacted soil, etc. Machine excavation or additional saw-cutting of pavements may then be allowed as directed by CECONY Engineering or CECONY Field Representative.***

3.1.7 Maintain clearances and separation distances to the existing Transmission Electric Facilities to the maximum extent possible at all times. Refer to section 3.2 for clearance and separation distance requirements.

3.1.8 Only Trained Personnel should work in the vicinity of exposed underground Transmission Electric Facilities.

3.2 CLEARANCES AND SEPARATION DISTANCE

3.2.1 Existing Transmission Electric Facilities within the Tolerance Zone must be protected in place. In general, a minimum of 3 feet of cover over the electric facilities shall be maintained. When less than 2 feet of cover is authorized because of special conditions, suitable guards shall be placed over pipes as described in CE-TS-3352. Clear distance between the guard and the pipe shall be a minimum of 6 inches. Contractor may be allowed to move the existing Transmission Electric Facilities by following the requirements described in section 3.2.2 and ***3.4.4***, or the new facilities must be relocated.

3.2.2 Maintain ***both*** the following minimum required ***vertical*** clearances and ***horizontal*** separation distances between ***existing*** Transmission Electric Facilities and ***the new subsurface*** facilities:

Paper copies of the Engineering Operations Manual are uncontrolled and therefore may be outdated. Please verify that you have the current version prior to use by viewing the Central Engineering website (http://cengl/).

□□□□□□□□□□0□□

□□□□□□□□□□□□□□□□0□0□

Subsurface Facility	Minimum Required Vertical Clearance* to Electric Facilities [ft]		Minimum Required Horizontal Separation Distance* to Electric Facilities [ft]	
	Without Protection	With Protection	Without Protection	With Protection
Gas Transmission Facilities ⓐⓑⓒ	1.0	0.5	1.0	0.5
Gas Distribution Facilities ⓐⓑⓒ	1.0	0.5	1.0	0.5
Gas Service Facilities ⓑⓒ	1.0	0.5	1.0	0.5
Electric Distribution Facilities ⓑⓒ Duct Bank ≥ 6 Ducts Duct Bank < 6 Ducts	 1.0 1.0	 *** ***	 12.0 6.0	 *** ***
Steam Main ⓑ Pipe Size ≥ 6 inch Pipe Size < 6 inch	 2.0 1.5	 *** ***	 12.0 6.0	 *** ***
Liquid Petroleum Pipelines ⓑⓒ	1.0	0.5	1.0	0.5
Water & Sewer ⓑ**	2.0	***	2.0	***
Temporary Construction (e.g. sheeting, shoring, piles, etc.)	2.0	1.0	2.0	1.0
Other Utilities (e.g. telephone, cable, etc.) ⓑ	1.0	***	1.0	***
Permanent Structures (e.g. piles, piers, catch basins, manholes, etc.)	2.0	***	2.0	***

* *If it is not practical to achieve the minimum required clearance or separation distance, it may be further reduced provided that all parties involved agree to the reduction and that suitable protective materials are placed between the electrical and other facilities for the entire length of the reduced clearances.*

** **If Transmission Electric Facilities pass within 2-ft of water mains or services, Transmission Electric Facilities shall be protected as described in specification CE-TS-3352, Section 1.2.4.**

*** **As directed by CECONY Field Representative**

ⓐ *CECONY Corporate Instruction CI-920-1, "Gas Facilities – Clearances, Encroachments, Interference, and Corrosion".*

ⓑ *CECONY Specification CE-TS-3352, "Specification for the Installation of High Pressure Pipe for 69, 138 and 345 kV Cable Systems – Section I General Requirements".*

ⓒ *State of New York Department of Public Service NYCRR 16 Part 101, "Underground Electric Facility Construction".*

ⓓ *2012 NESC – National Electrical Safety Code, C2-2012, IEEE Standard Association.*

ⓔ *CECONY Specification CE-ES-3004, "Construction Specification for the Installation of Underground Fiberglass Reinforced Epoxy (FRE) and Polyvinyl Chloride (PVC) Conduits.*

Paper copies of the Engineering Operations Manual are uncontrolled and therefore may be outdated. Please verify that you have the current version prior to use by viewing the Central Engineering website (http://ceng/).

3.3 Vibration Monitoring Program

3.3.1 Construction activities that involve blasting and non-blasting activities, including but not limited to pile driving, hydraulic breakers (hoe ram), drilling or boring activities, in the Encroachment Area of the underground facilities having the potential to produce vibration levels that may be susceptible to damaging existing Transmission Electric Facilities shall be monitored.

3.3.2 All blasting and non-blasting activities described in section 3.3.1 must be approved by CECONY Engineering prior to commencing the work and may require a vibration monitoring *plan* subject to CECONY review and approval. ***Allow minimum two weeks for CECONY Engineering's review and approval of a vibration monitoring plan.***

3.3.3 The Contractor is required to engage professional engineering services to conduct an existing conditions survey of the Transmission Electric Facilities, and an experienced vibration monitoring Consultant, ***with minimum 5 years of related experience in New York State***, is required to measure peak particle velocities prior to and during construction activities.

3.3.4 The measured vibration level experienced on the Transmission Electrical Facilities shall not exceed 0.5 in/sec. If maximum values are approached, construction activities shall be halted; construction means and methods shall be reevaluated, or an approved alternative construction methodology may be adopted ***to mitigate excessive vibration.***

3.3.5 The vibration monitoring plan shall include, but not be limited to, the following items:

3.3.5.1 Description of the Transmission Electric Facilities to be surveyed;

3.3.5.2 Monitoring equipment;

3.3.5.3 Monitoring device locations;

3.3.5.4 Monitoring frequency;

3.3.5.5 List of personnel to be notified (supplied by CECONY) in the event that vibration approaches the threshold limits.

3.3.6 The Contractor shall maintain a continuous log at the construction site and shall furnish a copy to the CECONY *Field Representative* upon request. The log shall also include receipts and notices of complaints. CECONY reserves the right to concurrently monitor any construction vibration levels. A preconstruction survey documenting the existing condition of the Transmission Electric Facilities to be monitored shall be conducted by the Contractor.

3.4 *Transmission Electric Facility* Support Design Criteria

3.4.1 Any and all materials/means used to hang, support, and/or protect the Transmission Electric Facility pipes must maintain the integrity of the pipe

Paper copies of the Engineering Operations Manual are uncontrolled and therefore may be outdated. Please verify that you have the current version prior to use by viewing the Central Engineering website (http://ceng/).

□□□□□□□□□□0□□

□□□□□□□□□□□□□□□□0□0□

□□□□□□

coating. Any and all damage to the coating must be reported to the CECONY representative on site; and no backfilling of the pipe can be performed until pipe coating is restored and inspected.

3.4.2 Prior to any Transmission Electric Facility pipe support work *that deviates from the CET manual,* the Contractor shall submit to CECONY Engineering the following for review and approval:

3.4.2.1 Drawings drawn to scale showing plans, sections and details of pipe support design stamped by a Professional Engineer.

3.4.2.2 Supporting calculations stamped by the Professional Engineer.

3.4.2.3 The design span for Transmission Electric Facility supports shall satisfy the allowable stress and deflection limits in accordance with ASME B31.1 considering both static loads and internal operating pressure. Additional loads due to jacking to move the Transmission Electric Facility pipes shall be accounted for in the support design.

3.4.2.4 Typical Transmission Electric Facility pipe parameters are listed in Exhibit A for calculating design loads for pipe supports.

3.4.2.5 The maximum spacing between supports shall not exceed 10 feet.

3.4.3 Pending a condition assessment of the pipe by CECONY, the Contractor may be allowed to adjust the location and/or elevation of existing Transmission Electric Facility pipes by transitioning the pipes with the minimum required Wingback distances for the required offsets as outline below. ***Wingback distances were computed for high pressure fluid filled (pipe-type) Transmission Electric Facilities only. Refer to drawing 516411 for schematic guideline on relocation of Transmission Electric Facilities.***

Nominal Pipe Size [in]	Minimum Required Wingback [ft]		
	6" Offset	9" Offset	12" Offset
5	88	108	125
6	98	120	138
7 (TUBE)	97	119	137
8	111	136	157
10	129	158	183
12	147	180	208

3.4.4 A work plan detailing the steps and means of moving the pipe shall be submitted to CECONY Engineering for approval. The plan shall identify the incremental sequence and distances to move the pipe in achieving the final offset, a

Paper copies of the Engineering Operations Manual are uncontrolled and therefore may be outdated. Please verify that you have the current version prior to use by viewing the Central Engineering website (http://cengl).

description of jacks (or other equipment) to move the pipe, their locations and load capacity, and the protective measures that will be employed to not damage the pipe coating.

3.5 Backfill

3.5.1. Prior to backfilling the exposed electric Transmission Electric Facility, CECONY Transmission Operations/Corrosion Control shall be notified to inspect the condition of pipe and repair any areas of corrosion or damaged coating.

3.5.2. Approved material is to be used for backfilling under, adjacent and over the *Transmission Electric Facilities* pipe as described in specifications EO-8085 (for general backfill) and CE-TS-4074 (for thermal sand) and as depicted on EO-12640-B. ***345kV transmission feeders must be backfilled with thermal sand and 69 KV and 138kV transmission feeders must be backfilled with clean sand as described by specifications. Contractor must submit a copy of the gradation analysis and test report to CECONY Engineering for approval.***

3.5.3. Reuse of excavated soil may be permitted as approved backfill materials if it conform to the requirements outlined in the Specification, CE-TS-3352, latest revision. Contractor must submit a copy of the gradation analysis and the material must be approved by CECONY prior to its application.

3.5.3.1. *For CECONY Contractors*, excavated soil must be managed in accordance with the requirements of CECONY GEHSI E05.11 "Management of Excavated Soils on Property Not Owned by the Company", latest revision. Excavated soil cannot be reused as backfill if it does not meet the requirements of the governing GEHSI.

3.5.4. Approved backfill shall be compacted in maximum 12" lifts in accordance with Specification EO-1181, latest revision, unless otherwise approved by CECONY.

3.5.5. ***The CECONY Field Representative may require in-place density tests to ensure proper compaction.***

3.6. SPECIAL NOTES FOR CONSTRUCTION ACTIVITIES

3.6.1. Each party shall use its best efforts to avoid or minimize, to the maximum extent practicable, any adverse environmental effects associated with the construction activities around subsurface Transmission Electric Facilities.

3.6.2. Perform daily job briefings with all employees before each shift, highlighting the hazards associated with working around Transmission Electric Facility and in excavations, i.e. high voltage electrical hazards, high pressure dielectric fluid or nitrogen gas pressure, coal tar pipe coatings, asbestos coating on pipe, work area protections, traffic, cave-ins, etc.

3.6.2.1. In the event that the Transmission Electric Facility pipe displays disturbed or disbonded asbestos coating, stop the work immediately and contact the CECONY Designated Contact for further directions.

Paper copies of the Engineering Operations Manual are uncontrolled and therefore may be outdated. Please verify that you have the current version prior to use by viewing the Central Engineering website (http://ceng/).

□□□□□□□□□□0□□

□□□□□□□□□□□□□□□□0□0□

3.6.3. Long duration projects must be managed with vigilance to ensure that all employees maintain proper focus regarding the hazards associated with working around the Transmission Electric Facilities.

3.6.4. CECONY shall inspect the exposed Transmission Electric Facility to verify its condition prior to any work being performed. It is Contractor's responsibility to contact CECONY to schedule this inspection.

3.6.5. Any undermined Transmission Electric Facility ten feet or great in span must be supported with sand bags, nylon slings or other approved methods, taking special care to not damage the pipe coating.

3.7. EMERGENCY ACTION PLAN

3.7.1. In the event of emergency, such as pipe cracks, leaks, or breakage, Contractor must notify the CECONY's Designated Contact immediately. All work must stop and cannot proceed until the CECONY field representative has inspected the damage and further direction is provided.

Paper copies of the Engineering Operations Manual are uncontrolled and therefore may be outdated. Please verify that you have the current version prior to use by viewing the Central Engineering website (http://ceng/).

4.0 EXHIBITS

EXHIBIT A – TYPICAL TRANSMISSION STEEL PIPE/CONDUIT PARAMETERS*

Pipe Size	OD	t	Uniform Weight	Max Operating Pressure	Design Temperature
	[inch]	[inch]	[plf]	[psig]	[°F]
5	5.5625	0.258	22	600	140
6	6.6250	0.280	30	600	140
7 (Tube)	7.0000	0.250	49	400	140
8	8.6250	0.250	68	400	140
10	10.7500	0.250	91	400	140
12	12.7500	0.250	109	400	140

* *Transmission steel pipe parameters described hereon are pipes manufactured in accordance with ASTM A-523 Grade A steel only. For any other materials encountered for during excavation, Contractor shall notify CECONY and request material-specific parameters. Weight includes pipe, cables and oil for 7" pipes and bigger. 5" and 6" pipes are return pipes with no cable inside and the weights include weight of pipe and oil only.*

Paper copies of the Engineering Operations Manual are uncontrolled and therefore may be outdated. Please verify that you have the current version prior to use by viewing the Central Engineering website (http://ceng/).

5.0 REFERENCES

5.1 State of New York Department of Public Service, 16 NYCRR Part 753 – Protection of Underground Facilities.

5.2 State of New York Department of Public Service, 16 NYCRR Part 101 – Underground Electric Facility Construction.

5.3 New York City Department of Buildings Technical Policy and Procedure Notice #10/88, "Procedures for the Avoidance of Damage to Historic Structures".

5.4 New York State Department of Transportation, Engineering Instruction, EI-05-044, "Special Specification for Building Condition Survey(s) and Vibration monitoring (Non-Blasting)"

5.5 2012 NESC – National Electrical Safety Code, C2-2012, IEEE Standard Association.

5.6 ASME B31.1-2014 ASME Code for Pressure Piping, B31 – Power Piping.

5.7 ASME BPVC.II.D.C-2015, ASME Boiler & Pressure Vessel Code – Section II Materials – Part D – Properties (Customary).

5.8 CECONY Corporate Instruction CI-920-1 – Gas Facilities – Clearances, Encroachments, Interference, and Corrosion.

5.9 CECONY General Environmental Health and Safety Instructions

GEHSI E05.11 "Management of Excavated Soils on Property Not Owned by the Company"

5.10 Central Engineering Drawings and Specifications

CE-ES-3004, "Construction Specification for the Installation of Underground Fiberglass Reinforced Epoxy (FRE) and Polyvinyl Chloride (PVC) Conduits.

CE-TS-3352, "Specification for the Installation of High Pressure Pipe for 69, 138 and 345 kV Cable Systems – Section I General Requirements".

CE-TS-4074, "General Purchase Specification for Controlled Thermal Sand Material for High Pressure Pipe Type Cables".

CE-TS-4197, "General Purchase Specification for Steel Pipe for Electrical Facilities and Casings".

CE-SS-3400, "Specification for the Installation of Civil Material and Equipment – Section III Detail Standard Specification, Part 2200 – Excavation & Backfilling".

EO-12640-B, "H.P. Cable and Dielectric Fluid Circulating Pipe Trenching and Backfill".

Dwg 516411, "Guideline for Permanent Relocation of Feeder Pipes using "Wingback" Method".

Paper copies of the Engineering Operations Manual are uncontrolled and therefore may be outdated. Please verify that you have the current version prior to use by viewing the Central Engineering website (http://ceng/).

□□□□□□□□□□0□□

□□□□□□□□□□□□□□□□0□0□

□□□□□□

5.11 Distribution Engineering Specification

EO-1181, "General Specification For Backfilling Of Trench And Small Openings"

EO-8085, "General Specification for Backfill and Bedding Material for Excavations".

Paper copies of the Engineering Operations Manual are uncontrolled and therefore may be outdated. Please verify that you have the current version prior to use by viewing the Central Engineering website (http://ceng/).

Con Edison□ECS & Altice□specialty work items

JB 100 - 116 - TRENCH CROSSINGS SUPPORT AND PROTECTION OF UTILITY FACILITIES

A. Description

Under this section, the Contractor shall provide all labor, materials, equipment, insurance and incidentals required to support and maintain and protect and accommodate the integrity of utility facilities, including but not limited to:

1. Conduits;
2. Conductors;
3. Concrete Encased Conduit Banks;
4. Steel Pipes; Steam Facilities:
5. Oil-o-Static Facilities; and
6. Non-Cost Sharing Gas;

Of various sizes and configurations, crossing at various angles as shown on the Contract Documents above the sewer, catch basin chute connection pipes, water main trench excavation at the locations shown in the contract documents or as encountered during construction and as directed by the facility operator in consultation with the Resident Engineer. The support, maintenance, protection, and accommodation of utility facilities encountered during performance of test pits as ordered by the City are also covered under this item.

The above reference to facilities crossing at "various angles" shall mean that such facilities are crossing sewer, water and catch basin chute excavations at a 90 degree angle to the proposed sheeting line or side of excavation (for unsheeted trenches) with an allowable deviation of 60 degrees in any direction. The only exceptions to this definition shall be where greater angles are shown on the contract documents.

B. Materials

All materials used to support and protect shall be as indicated on the attached standard Sketches JB 100 A, A-1, B, C, C-1 and D shall be supplied by the Contractor and approved by the facility operator in consultation with the Resident Engineer.

C. Methods of Construction

The Contractor shall support and protect all utility facilities crossing excavations as shown on the Standard sketches. Sketches JB 100A and CET 100A-1 are to be used as a guide. Alternate methods and/or one or a combination of methods shown on the JB sketches shall be permitted if proposed by the Contractor and approved by the facility operator in consultation with the Resident Engineer. It is the intent of this item to support and maintain and protect and accommodate the integrity of utility facilities and all combinations and configurations of utility facilities encountered in the course of the work. Support Requirements for utility facilities crossing Items (Sketch JB 100A) are intended to support the actual square foot cross section area of the utility facilities. Where multiple facilities are measure for

payment purposes as one facility, conditions may require that each facility be supported separately. Sketch JB 100A can be used as a guide to determine support requirements.

The facility operator shall identify the locations of all utilities within the contract area as required by New York State Industrial Code Rule 753. As provided by the Rule, the contractor shall use hand excavation methods (pick and shovel or hand held power tools) directly below the pavement base to expose the facilities and to ascertain the numerical relationships and/or dimensions of these utilities with respect to the proposed excavation and/or sheeting operations. Upon exposing the affected utilities sufficiently at the sole discretion of the facility operator in consultation with the Resident Engineer, to determine relationships and/or dimensions, the contractor shall be permitted to proceed with a combination of hand and machine excavation, as appropriate, with a zone of protection whose limit shall be defined as a perimeter located 12 inches from the outside face of each utility crossing or interference.

Combination of hand and hand and machine excavation may be required within the limits of the city trench under and between zones of protection and/or between utility facilities and other existing structures.

Some of the existing coatings on oil-o-static pipes and/or return lines may consist of coal tar wrap and may contain asbestos and/or PCB's. Upon completion of hand excavation and unearthing (visual line of sight) of oil-o-static and return lines encroaching/exposed, the Con Edison representative must visually inspect all oil-o-static and return lines that are exposed during the performance of this contract. The Contractor shall notify the Con Edison representative to perform this inspection and subsequent testing where the coating appears to lack integrity. If the visual inspection/tests reveal the presence of asbestos and/or PCB's, the work will be considered "specialty work" and be performed by Con Edison forces or by a specialty Contractor hired by Con Edison in accordance with JB 302 and the latest version of G-8209. If any damage to the oil-o-static and/or return lines' field coating is caused by the Contractor, all costs associated with testing, any additional excavation in order to perform "specialty work" and any and all delays incurred shall be at the Contractor's expense. The Contractor will coordinate their operations to allow this work to be performed. The latest version of Con Edison Gas Operations Standard G-8209, System B will be the only method that will be allowed. The coating shall be verified and accepted by the Con Edison representative prior to backfilling.

D. <u>Method of Measurement</u>

The quantity to be measured for payment shall be each (EA) type of utility facility crossing any new sewer, catch basin chute connection pipe or water pipe trench excavation. The various types of facility crossings (described below) shall be defined as "ranges" of their cross sectional areas, measured in square feet (SF) along a plane cutting through the trench parallel to the water/sewer and catch basin chute connection pipe trench. The area shall be a rectangle or square vertical plane enclosing and touching the outside limits of the utility. The sides of

the rectangle or square shall be approximately level and plumb as shown on attached Sketch JB 100 E. When utility facilities are located and overlap at any point along the utility spans crossing the trench excavation and are over, or under and within one foot of each other, both horizontally and vertically, (except oil-o-static lines which shall be within two feet of each other), the utility facilities involved shall be considered, for the purposes of this section, as one utility crossing limited by the outside faces of the extreme pipes, conduits, ducts, and/or duct banks. The cross sectional area to be measured shall be selected at the point of the greatest area along the utility spanning the trench excavation, as previously described, and as shown on the attached Sketch JB 100 E. Each type of utility crossing shall be paid for separately. The types of utility crossings are defined as follows:

Type .1 = Cross sectional area of utility up to and including 0.75 SF
Type .2 = Cross sectional area of utility over 0.75 SF, up to and including 2.0 SF
Type .3 = Cross sectional area of utility over 2.0 SF, up to and including 6.0 SF
Type .4 = Cross sectional area of utility over 6.0 SF, up to and including 10.0 SF
Type .5 = Cross sectional area of utility over 10.0 SF, up to and including 15.0 SF
Type .6 = Cross sectional area of utility over 15.0 SF, up and including 20.0 SF
Type .7 = Cross sectional area of utility over 20.0 SF

E. Price to Cover

The unit price bid for each of the various items shall cover the cost of all labor, material, equipment, insurance, and incidentals necessary to completely support and maintain and protect and accommodate the integrity of the utilities without disruption of service to the customers and in accordance with contract documents. The unit price shall also include the cost of: supports, slings and beams installed for utility support; additional supports necessary for multiple facilities that for payment purposes are measured as one facility; changes of sheeting method and configuration where necessary to accommodate the utility; installation of new sewer, water, and catch basin chute connection pipes under the utilities; (including the removal of any abandoned existing facilities to be removed under the City Contract as shown on the Contract Drawings) a combination of hand and hand and machine excavation within the zone of protection, backfilling and compacting around, over, under and between the zones of protection of the utilities; and removal of sheeting around the utilities, and the cost of any impact with maintenance and protection of traffic. The unit price shall also cover any additional excavations, including hand and hand and machine excavations under and in between zones of protection for single and multiple utilities; tunneling; additional pipe cutting and joining; removal of existing city facilities; snaking and/or in between utility facilities and other existing structures.

The price shall cover any costs incurred for the Contractor to coordinate with Con Edison forces or their Specialty Contractor to perform the visual inspection of exposed oil-o-static and return lines and additional excavation that may be required to perform testing if the existing field coating appears to lack integrity; modification of work methods and/or construction sequencing, any impact with maintenance and protection of traffic, and loss of productivity. Payment for field

coating of oil-o-static feeder pipes, as required, shall be covered under JB 302 in accordance with the latest version of G-8209.

F. References

1. Sketches JB 100A, A-1, B, C, C-1, D, E
2. NYS Industrial Code Rule 753
3. Item JB 302
4. Con Edison Gas Operations Standard G-8209 – Field Coating of Steel Pipe and Fittings Installed Underground and in Subsurface Structures

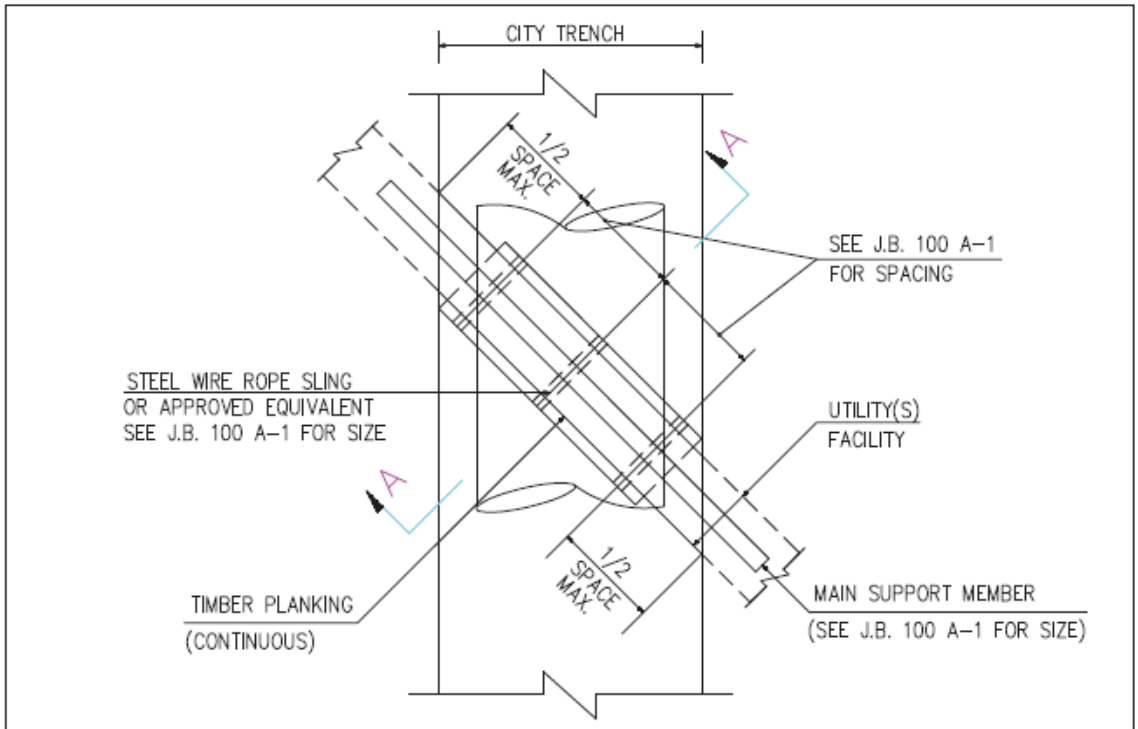

PLAN

N.T.S.

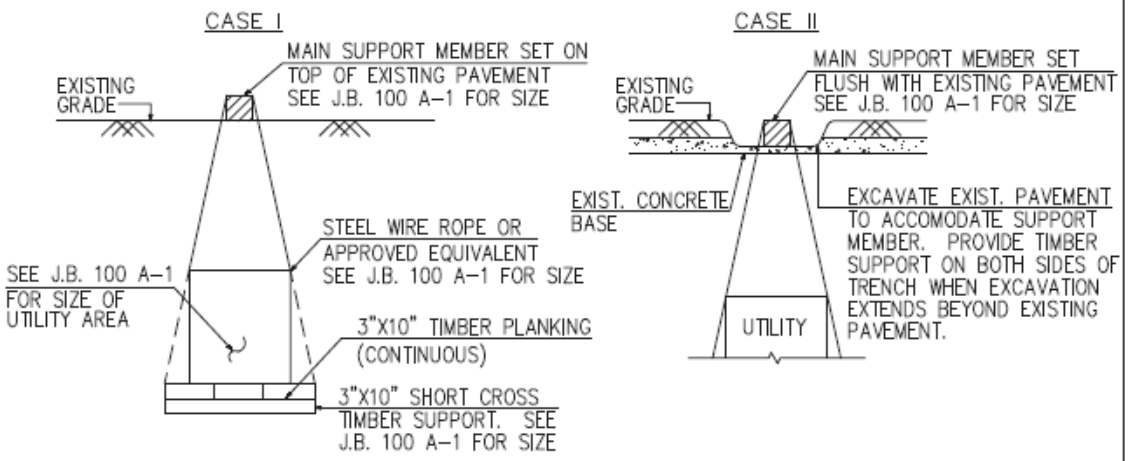

SECTION A–A

N.T.S.

NOTE:
VARIOUS ANGLES AND DEPTH ARE AS DEFINED IN ITEM J.B. 100–116.

J.B. SKETCH	
TEMPORARY SUPPORT OF UTILITY(S) CROSSING CITY TRENCH	
CONTRACT NO.	SKETCH NO. J.B. 100 A

REVISIONS

WATER/ SEWER DIAM.	CROSS SECTION AREA OF PRIVATE UTILITIES	INTERMEDIATE SUPPORT SLING ♦		NUMBER OF MAIN TIMBER SUPPORT MEMBERS				MAIN STEEL SUPPORT MEMBERS	TIMBER SHORT SIZE SEE NOTE 1
		NUMBER REQUIRED	UTILITY SUPPORT LENGTH	4" X 4"	4" X 8"	3" X 10"	4" X 12"	1 REQUIRED	1 PER SLING
D<12"	A≤0.75 S.F.	1	7.1 FT	1	–	–	–	W 4 X 13	2" X 4"
	0.75<A≤2.00 S.F.	2	7.1 FT	–	1	–	–	W 6 X 15	3" X 4"
	2.00<A≤6.00 S.F.	3	7.1 FT	–	–	2	–	W 6 X 15	4" X 4"
	6.00<A≤10.0 S.F.	4	7.1 FT	–	–	3	–	W 8 X 18	3" X 10"
	10.0<A≤15.0 S.F.	4	7.1 FT	–	–	–	2	W 6 X 25	3" X 10"
	15.0<A≤20.0 S.F.	4	7.1 FT	–	–	–	3	W 6 X 25	4" X 10"
	>20.0 S.F.	(METHOD OF SUPPORT TO BE SUBMITTED BY CONTRACTOR AND APPROVED BY FACILITY OPERATOR)							
12"<D≤24"	≤0.75 S.F.	1	8.5 FT	2	–	–	–	W 4 X 13	2" X 4"
	0.75<A≤2.00 S.F.	2	8.5 FT	–	1	–	–	W 6 X 15	3" X 4"
	2.00<A≤6.00 S.F.	4	8.5 FT	–	–	3	–	W 6 X 15	4" X 4"
	6.00<A≤10.0 S.F.	5	8.5 FT	–	–	4	–	W 8 X 18	3" X 10"
	10.0<A≤15.0 S.F.	5	8.5 FT	–	–	–	3	W 6 X 25	3" X 10"
	15.0<A≤20.0 S.F.	5	8.5 FT	–	–	–	4	W 6 X 25	4" X 10"
	>20.0 S.F.	(METHOD OF SUPPORT TO BE SUBMITTED BY CONTRACTOR AND APPROVED BY FACILITY OPERATOR)							
24"<D≤36"	A≤0.75 S.F.	1	9.9 FT	2	–	–	–	W 4 X 13	2" X 4"
	0.75<A≤2.00 S.F.	3	9.9 FT	–	1	–	–	W 6 X 15	3" X 4"
	2.00<A≤6.00 S.F.	4	9.9 FT	–	–	3	–	W 8 X 18	4" X 4"
	6.00<A≤10.0 S.F.	6	9.9 FT	–	–	5	–	W 8 X 18	3" X 10"
	10.0<A≤15.0 S.F.	6	9.9 FT	–	–	–	4	W 6 X 25	3" X 10"
	15.0<A≤20.0 S.F.	6	9.9 FT	–	–	–	5	W 8 X 31	4" X 10"
	>20.0 S.F.	(METHOD OF SUPPORT TO BE SUBMITTED BY CONTRACTOR AND APPROVED BY FACILITY OPERATOR)							
36"<D≤48"	A≤0.75 S.F.	2	11.3 FT	3	–	–	–	W 4 X 13	2" X 4"
	0.75<A≤2.00 S.F.	3	11.3 FT	–	2	–	–	W 6 X 15	3" X 4"
	2.00<A≤6.00 S.F.	5	11.3 FT	–	–	4	–	W 8 X 18	4" X 4"
	6.00<A≤10.0 S.F.	7	11.3 FT	–	–	7	–	W 8 X 18	3" X 10"
	10.0<A≤15.0 S.F.	7	11.3 FT	–	–	–	5	W 8 X 31	3" X 10"
	15.0<A≤20.0 S.F.	7	11.3 FT	–	–	–	7	W 8 X 31	4" X 10"
	>20.0 S.F.	(METHOD OF SUPPORT TO BE SUBMITTED BY CONTRACTOR AND APPROVED BY FACILITY OPERATOR)							
48"<D≤54"	A≤0.75 S.F.	2	12.0 FT	3	–	–	–	W 4 X 13	2" X 4"
	0.75<A≤2.00 S.F.	3	12.0 FT	–	2	–	–	W 6 X 15	3" X 4"
	2.00<A≤6.00 S.F.	5	12.0 FT	–	–	5	–	W 8 X 18	4" X 4"
	6.00<A≤10.0 S.F.	7	12.0 FT	–	–	8	–	W 8 X 18	3" X 10"
	10.0<A≤15.0 S.F.	7	12.0 FT	–	–	–	6	W 8 X 31	3" X 10"
	15.0<A≤20.0 S.F.	7	12.0 FT	–	–	–	7	W 10 X 33	4" X 10"
	>20.0 S.F.	(METHOD OF SUPPORT TO BE SUBMITTED BY CONTRACTOR AND APPROVED BY FACILITY OPERATOR)							
** 54"<D≤60"	A≤0.75 S.F.	2	12.7 FT	3	–	–	–	W 4 X 13	2" X 4"
	0.75<A≤2.00 S.F.	4	12.7 FT	–	2	–	–	W 6 X 15	3" X 4"
	2.00<A≤6.00 S.F.	6	12.7 FT	–	–	5	–	W 8 X 18	4" X 4"
	6.00<A≤10.0 S.F.	8	12.7 FT	–	–	9	–	W 8 X 18	3" X 10"
	10.0<A≤15.0 S.F.	8	12.7 FT	–	–	–	6	W 8 X 31	3" X 10"
	15.0<A≤20.0 S.F.	8	12.7 FT	–	–	–	8	W 10 X 33	4" X 10"
	>20.0 S.F.	(METHOD OF SUPPORT TO BE SUBMITTED BY CONTRACTOR AND APPROVED BY FACILITY OPERATOR)							
60"<D≤72"	A≤0.75 S.F.	2	14.1 FT	4	–	–	–	W 4 X 13	2" X 4"
	0.75<A≤2.00 S.F.	4	14.1 FT	–	2	–	–	W 6 X 15	3" X 4"
	2.00<A≤6.00 S.F.	7	14.1 FT	–	–	6	–	W 8 X 18	4" X 4"
	6.00<A≤10.0 S.F.	9	14.1 FT	–	–	10	–	W 8 X 31	3" X 10"
	10.0<A≤15.0 S.F.	9	14.1 FT	–	–	–	8	W 10 X 45	3" X 10"
	**15.0<A≤20.0 S.F.	9	14.1 FT	–	–	–	10	W 10 X 45	4" X 10"
	>20.0 S.F.	(METHOD OF SUPPORT TO BE SUBMITTED BY CONTRACTOR AND APPROVED BY FACILITY OPERATOR)							
72"<D≤84"	A≤0.75 S.F.	2	15.5 FT	5	–	–	–	W 4 X 13	2" X 4"
	0.75<A≤2.00 S.F.	5	15.5 FT	–	3	–	–	W 6 X 15	3" X 4"
	2.00<A≤6.00 S.F.	7	15.5 FT	–	–	8	–	W 8 X 18	4" X 4"
	6.00<A≤10.0 S.F.	10	15.5 FT	–	–	12	–	W 8 X 31	3" X 10"
	10.0<A≤15.0 S.F.	10	15.5 FT	–	–	–	9	W 10 X 45	3" X 10"
	15.0<A≤20.0 S.F.	10	15.5 FT	–	–	–	12	W 10 X 45	4" X 10"
	>20.0 S.F.	(METHOD OF SUPPORT TO BE SUBMITTED BY CONTRACTOR AND APPROVED BY FACILITY OPERATOR)							
> 84"	A≤0.75 S.F.	2	15.5 FT	5	–	–	–	W 4 X 13	2" X 4"
	0.75<A≤2.00 S.F.	5	15.5 FT	–	3	–	–	W 6 X 15	3" X 4"
	2.00<A≤6.00 S.F.	7	15.5 FT	–	–	8	–	W 8 X 18	4" X 4"
	6.00<A≤10.0 S.F.	10	15.5 FT	–	–	12	–	W 8 X 31	3" X 10"
	10.0<A≤15.0 S.F.	10	15.5 FT	–	–	–	9	W 10 X 45	3" X 10"
	15.0<A≤20.0 S.F.	10	15.5 FT	–	–	–	12	W 10 X 45	4" X 10"
	>20.0 S.F.	(METHOD OF SUPPORT TO BE SUBMITTED BY CONTRACTOR AND APPROVED BY FACILITY OPERATOR)							

NOTES

1. TIMBER SHORT CROSS SIZE SUPPORTING 3"x10" CONTINUOUS TIMBER PLANKS
2. THIS SKETCH SHALL NOT BE USED FOR COMPUTATION OF PAYMENT LINES. FOR PAYMENT SEE J.B. SKETCH 100E.

♦ SLING SHALL BE 2" WIDE NYLON STRAP OR EQUIVALENT (SLING CAPACITY SHALL BE 6,000 LBS.) ONE (1) TIMBER SHORT CROSS REQUIRED AT EACH SLING SUPPORTING 3"x10" CONTINUOUS TIMBER PLANKS.

ASSUMPTIONS

1. ASSUME CROSS SECTION AREAS ARE SOLID CONCRETE AT 150lb./C.F.
2. ASSUME ALLOWABLE BENDING STRESS FOR TIMBER MEMBERS IS 1200 PSI.
3. ASSUME ALLOWABLE TIMBER SHEER STRESS IS 90 PSI.
4. ASSUME ALLOWABLE SHEAR STRESS FOR STEEL MEMBERS IS 1000 PSI.

** ALSO APPLIES FOR 9'x9' EXCAVATIONS FOR CATCHBASINS UNDER ITEM J.B. 225

REVISIONS

J.B. SKETCH

SUPPORT REQUIREMENTS FOR PRIVATE UTILITY CROSSING ITEMS (PLAN & SECTION A–A SKETCH NO. 100 A)

CONTRACT NO.

SKETCH NO. J.B. 100 A–1

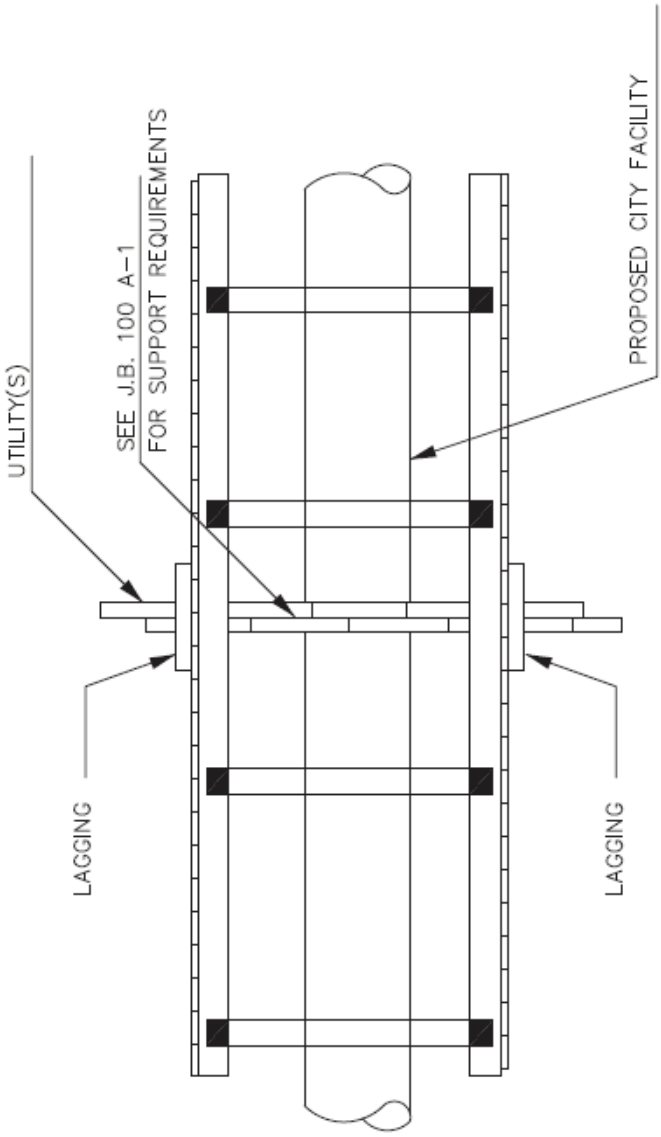

PLAN VIEW
N.T.S.

J.B. SKETCH	
TYPICAL SUPPORT MAINTENANCE AND PROTECTION OF J.B. FACILITIES	
REVISIONS	CONTRACT NO. / SKETCH NO. J.B. 100 B

□□□□□□

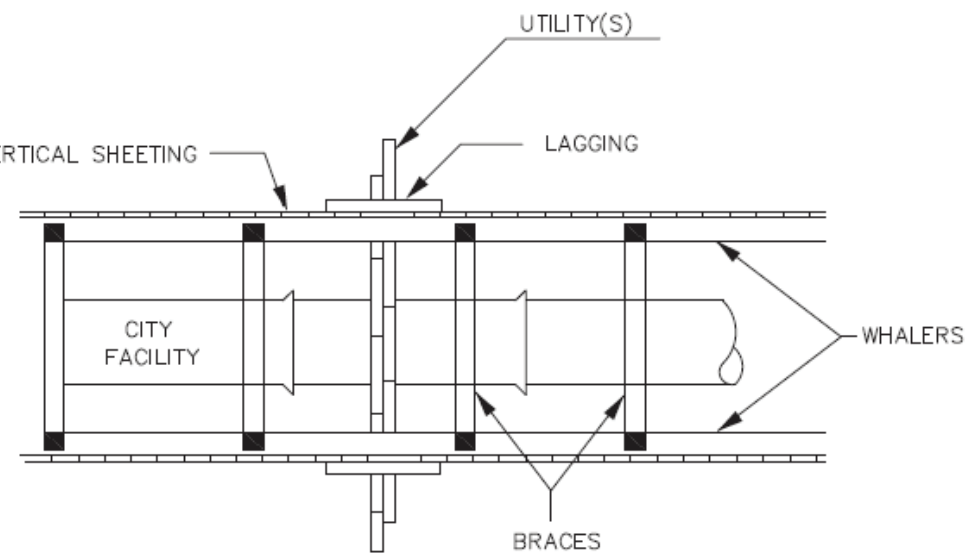

PLAN VIEW

N.T.S.

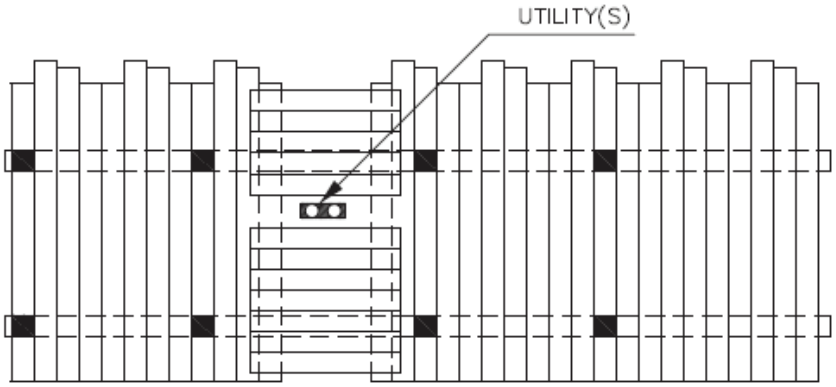

PROFILE VIEW

N.T.S.

J.B. SKETCH	
LAGGING	
REVISIONS	
CONTRACT NO.	SKETCH NO. J.B. 100 C

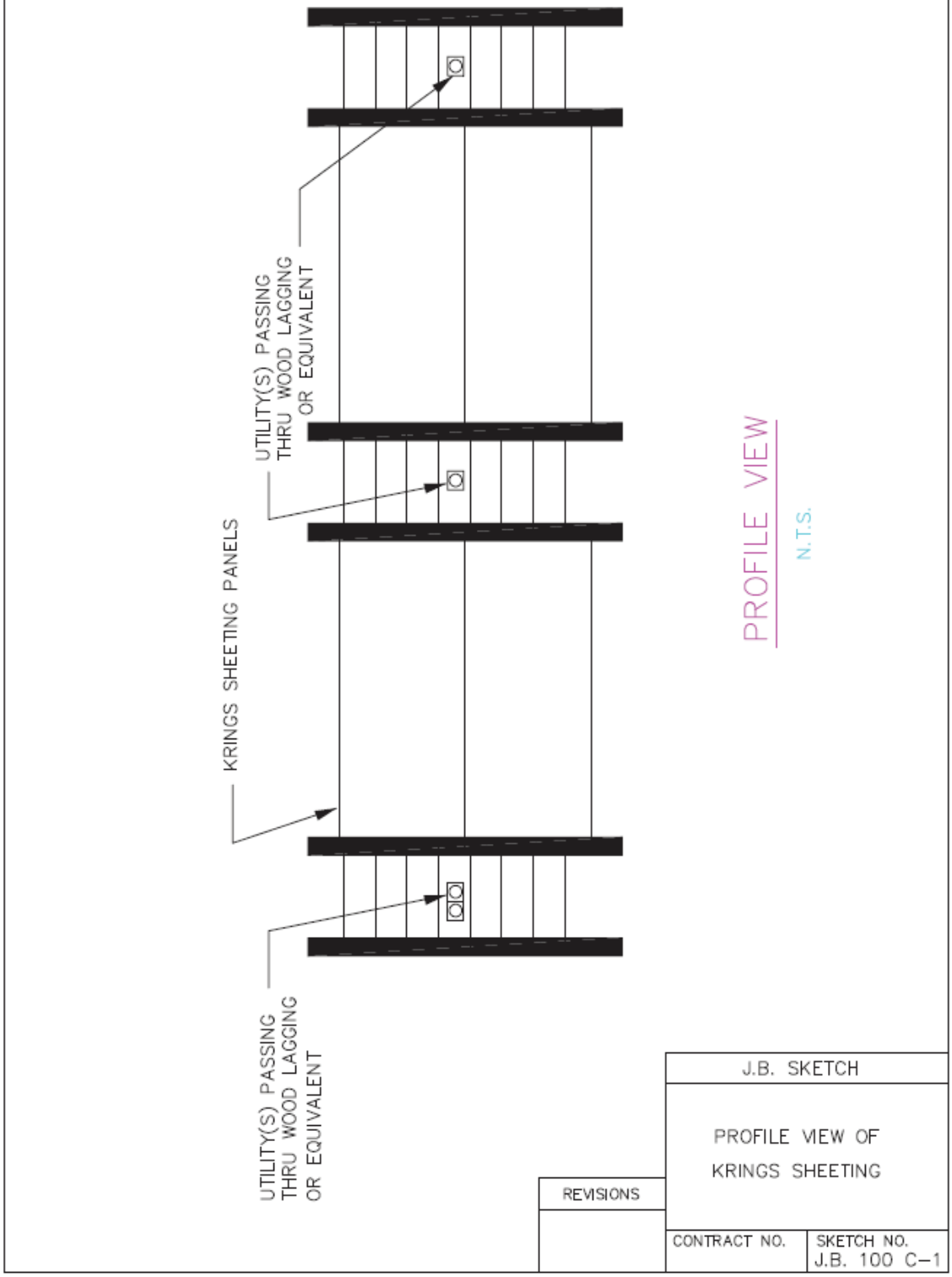
UTILITY(S) PASSING
THRU WOOD LAGGING
OR EQUIVALENT
KRINGS SHEETING PANELS
UTILITY(S) PASSING
THRU WOOD LAGGING
OR EQUIVALENT
PROFILE VIEW
N.T.S.
J.B. SKETCH
PROFILE VIEW OF
KRINGS SHEETING
REVISIONS
CONTRACT NO.
SKETCH NO.
J.B. 100 C-1

□□□□□□

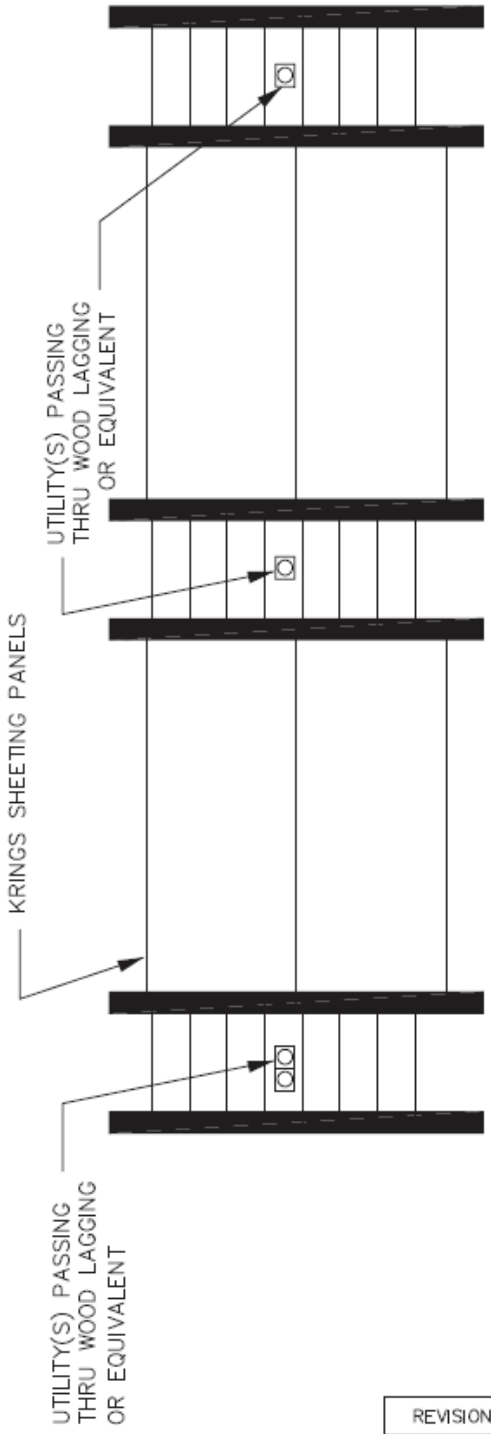

PROFILE VIEW

N.T.S.

J.B. SKETCH	
PROFILE VIEW OF KRINGS SHEETING	
REVISIONS	
CONTRACT NO.	SKETCH NO. J.B. 100 C-1

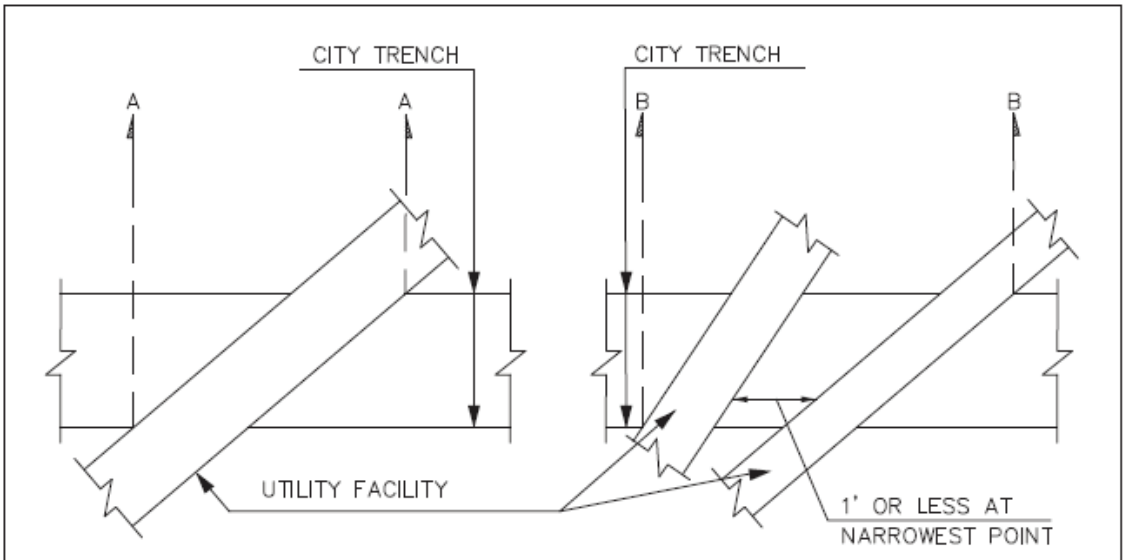

SINGLE UTILITY CROSSING

NOT TO SCALE

MULTIPLE UTILITY CROSSING

NOT TO SCALE

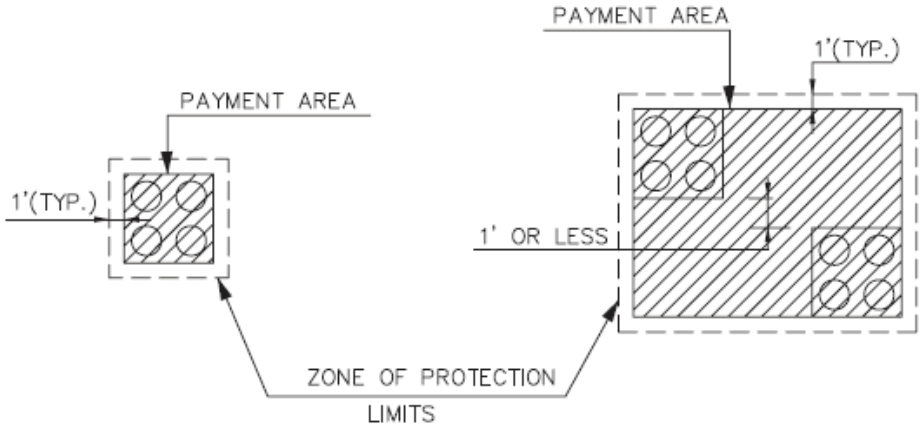

SECTION A–A

NOT TO SCALE

SECTION B–B

(AT WIDEST POINT)

NOT TO SCALE

NOTE:
VARIOUS ANGLES AND DEPTH ARE AS DEFINED IN ITEM J.B. 100–116.

J.B. SKETCH	
TYPICAL METHOD OF MEASUREMENT FOR UTILITY(S) CROSSING	
REVISIONS	
CONTRACT NO.	SKETCH NO. J.B. 100 E

JB 117 – UTILITIES CROSSING PILES FOR FLOOD WALL OR FLOOD GATE

A. Description

Under this section, the Contractor shall provide all incremental labor, materials, equipment, insurance and incidentals required to sleeve and seal utility facilities, included but not limited to:

1. Conduits;
2. Conductors;
3. Concrete encased conduit banks;
4. Steel pipes;
5. Plastic conduit banks;
6. Steam mains;
7. Fiber optic lines;
8. Oil-o-Static facilities
9. Fuel lines;
10. Freeze lines; and
11. All gas mains (low pressure, high pressure, transmission mains) of any type of material (steel, P.E., C.I., W.I., etc.);

Of various sizes and configurations as encountered during construction, located under the proposed flood wall, flood gate or retaining wall between the piles and through flowable fill (or approved equal). Auger piles or a Con Edison approved equivalent method will be used under this specification to limit vibration around the utility facilities. Utility crossings, under no circumstance, will cross through jet grout material. The support, maintenance, protection, and accommodation of utility facilities, including minor adjustments to these facilities, as encountered during performance of this item and any test pits ordered by the City or Facility Operator in reference to this item shall be paid under other appropriate JB items.

Utilities crossing the flood wall, flood gate and retaining wall shall be at a 90 degree angle to the proposed sheeting line or side of excavation (for unsheeted trenches) with an allowable deviation of 60 degrees in any direction.

This item includes the additional material and effort(s), above and beyond the utility crossing details included in the contract drawings dated February 21, 2020 for the flood wall and flood gate design under Project ID: SANDRESM1.

In consultation with the Resident Engineer, the facility operator through its authorized representatives shall be solely responsible for approval of methods used by the contractor to perform work under this item. All work shall be performed without risking the integrity of the utility facility and be done consistent with all applicable safety standards as directed by the facility operator in consultation with the Resident Engineer.

B. Materials

All materials used to sleeve and seal utility facilities including but not limited to additional auger piles, lean concrete, extrudable hydrophilic waterstops, ribbed centerbulb waterstops, flowable fill, jet grout, sand, sleeves, link seal, and altering of any kind to sheeting and shoring systems, and any incidental hardware shall be supplied by the Contractor, at no cost to Con

Edison, and approved by the facility operator in consultation with the Resident Engineer. All conduit(s) shall be supplied to the Contractor's requested location by the facility operator for work under this item. The Contractor shall be required to inform Con Edison in advance of the need for link seal. The Contractor shall notify the facility operator(s) of the installation schedule at least 10 days before such materials are required on the site. The Contractor shall be responsible to unload, handle, store, deliver and/or distribute the material supplied by the facility operator(s) to the required job location(s) for the duration of the contract. It shall also be the Contractor's responsibility to inspect and verify upon delivery that the correct quantity of material has been delivered and to advise the facility operator(s), through its authorized representative, of all damaged material. The Contractor at no additional expense to the facility operator(s) shall replace any material that is damaged or lost after the Contractor's inspection and acceptance.

C. Methods of Construction

All work shall comply with the specifications, plans and standard of the facility operator. The Contractor shall refer to Utility Crossings dated February 21, 2020 for the flood wall, flood gate and retaining wall design under Project ID: SANDRESM1. Alternate sheeting means and methods and/or a combination of methods shall be covered by this section if proposed by the Contractor and approved by the facility operator in consultation with the Resident Engineer. It is the intent of this item to provide link seal around Con Edison's facilities on the flood side of the structure, install a sleeve running the entire length of the crossing, and in the remaining voids provide sand between the sleeve and utility as shown on Con Edison Dwg. EO-9230-C. Methods to perform this work in flowable fill material shall be permitted if proposed by the Contractor and approved by the facility operator in consultation with the Resident Engineer.

Some of the existing coatings on oil-o-static pipes and/or return lines may consist of coal tar wrap and may contain asbestos and/or PCB's. Upon completion of hand excavation and unearthing (visual line of sight) of oil-o-static and return lines encroaching/exposed, the Con Edison representative must visually inspect all oil-o-static and return lines that are exposed during the performance of this contract. The Contractor shall notify the Con Edison representative to perform this inspection and subsequent testing where the coating appears to lack integrity. If the visual inspection/tests reveal the presence of asbestos and/or PCB's, the work will be considered "specialty work" and be performed by Con Edison forces or by a Specialty Contractor hired by Con Edison in accordance with JB 302 and the latest version of G-8209. If any damage to the oil-o-static and/or return lines' field coating is caused by the Contractor, all costs associated with testing, any additional excavation in order to perform "specialty work" and any and all delays incurred shall be at the Contractor's expense. The Contractor will coordinate their operations to allow this work to be performed. The latest version of Con Edison Gas Operations Standard G-8209, System B will be the only method that will be allowed. The coating shall be verified and accepted by the Con Edison representative prior to backfilling.

D. Method of Measurement

The quantity to be measured for payment shall be each (EA) type of utility facility located underneath the proposed flood wall/flood gate/retaining wall crossing through flowable fill material between the auger piles where the sleeve and modified wall/gate section is installed, as encountered during construction and as directed by the facility operator in consultation with

the Resident Engineer. The types of piles included under this specification include all various types of piles referenced in the Contract Drawings dated February 21, 2020 as defined below:

JB 117B = Utilities crossing sheet piles for flood wall/gate
JB 117C = Utilities crossing various types of individual piles for flood wall/gate

The various types of facility crossings (described below) shall be defined as "ranges" of their cross sectional areas, measured in square feet (SF) along a plane cutting through the trench parallel to the flood wall/flood gate/retaining wall. The area shall be a rectangle or square vertical plane enclosing and touching the outside limits of the utility. The sides of the rectangle or square shall be approximately level and plumb. When utility facilities are located and overlap at any point along the utility spans crossing the trench excavation and are over, or under and within one foot of each other, both horizontally and vertically, (except oil-o-static lines which shall be within two feet of each other), the utility facilities involved shall be considered, for the purposes of this section, as one utility crossing limited by the outside faces of the extreme pipes, conduits, ducts and/or duct banks. The cross sectional area to be measured shall be selected at the point of the greatest area along the utility spanning the trench excavation, as previously described. Each type of utility crossing shall be paid for separately. The types of utility crossings are defined as follows:

Type .1 = Cross sectional area of utility up to and including 0.75 SF
Type .2 = Cross sectional area of utility over 0.75 SF, up to and including 2.0 SF
Type .3 = Cross sectional area of utility over 2.0 SF, up to and including 6.0 SF
Type .4 = Cross sectional area of utility over 6.0 SF, up to and including 10.0 SF
Type .5 = Cross sectional area of utility over 10.0 SF, up to and including 20.0 SF

E. Price to Cover

The unit price bid for each of the various items shall cover the cost of all labor, materials, equipment, insurance and incidentals necessary to sleeve and seal the utilities without disruption of service to the customers and in accordance with contract documents. Vibration monitoring shall be deemed included in the cost of all joint bid items (see general notes). Contractor to refer to the latest version of Con Edison Dwg. EO-9230-C for sleeve diameter and link seal details. Utility facilities through flowable fill material, excavatable fill, or approved equal are permitted in accordance with the facility operator and in consultation with the Resident Engineer. Under no circumstance shall utility facilities cross through jet grout material.

The unit price shall also include the cost of changes of sheeting means and methods and configuration where necessary to accommodate the utility, hand excavation within the zone of protection, removal of sheeting around the utilities, and the cost of any impact with maintenance and protection of traffic. The zone of protection varies for each type of utility facility and shall be determined by the facility operator and in consultation with the Resident Engineer. Where the typical utility crossing details provided in the contract drawings dated February 21, 2020 for the flood wall, flood gate and retaining wall, Project ID: SANDRESM1 require modification, the unit price shall also include the cost of additional concrete, additional steel reinforcement, pile cap and auger pile design as directed by the facility operator in consultation with the Resident Engineer.

The price shall cover any costs incurred for the Contractor to coordinate with Con Edison forces or their Specialty Contractor to perform the visual inspection of exposed oil-o-static and return lines and additional excavation that may be required to perform testing if the existing field coating appears to lack integrity; modification of work methods and/or construction sequencing, any impact with maintenance and protection of traffic, and loss of productivity. Payment for field coating of oil-o-static feeder pipes, as required, shall be covered under JB 302 in accordance with the latest version of G-8209.

F. References

1. Item JB 302
2. Con Edison Gas Operations Standard G-8209 – Field Coating of Steel Pipe and Fittings Installed Underground and in Subsurface Structures
3. EO-9230-C

Details will be provided during construction when the extent of work included under this item is identified by the facility operator in consultation with the Resident Engineer.

JB 118 – UTILITIES CROSSING THROUGH FLOOD WALL OR FLOOD GATE, REINFORCED CONCRETE FOUNDATION, OR PILE CAP

A. Description

Under this section, the Contractor shall provide all incremental labor, materials, equipment, insurance and incidentals required to sleeve and seal utility facilities, included but not limited to:

1. Conduits;
2. Conductors;
3. Concrete encased conduit banks;
4. Steel pipes;
5. Plastic conduit banks;
6. Steam mains;
7. Fiber optic lines;
8. Oil-o-Static facilities;
9. Fuel lines;
10. Freeze lines; and
11. All gas mains (low pressure, high pressure, transmission mains) of any type of material (steel, P.E., C.I., W.I., etc.);

Of various sizes and configurations as encountered during construction, crossing through the proposed flood wall, flood gate or retaining wall reinforced concrete, foundation, or pile cap. Auger piles or a Con Edison approved equivalent method will be used under this specification to limit vibration around the utility facilities. The support, maintenance, protection, and accommodation of utility facilities encountered, including minor adjustments to these facilities, as encountered during performance of this item and any test pits ordered by the City or Facility Operator in reference to this item shall be paid under other appropriate JB items.

Utilities crossing the flood wall, flood gate and retaining wall shall be at a 90 degree angle to the proposed sheeting line or side of excavation (for unsheeted trenches) with an allowable deviation of 60 degrees in any direction.

This item includes the additional material and effort(s), above and beyond the contract drawings dated February 21, 2020 for the flood wall, flood gate and retaining wall design under Project ID: SANDRESM1. In this instance, the Contractor shall submit a redesign of the wall/gate to accommodate Con Edison utilities for review and approval by the City and Con Edison.

In consultation with the Resident Engineer, the facility operator through its authorized representatives shall be solely responsible for approval of methods used by the contractor to perform work under this item. All work shall be performed without risking the integrity of the utility facility and be done consistent with all applicable safety standards as directed by the facility operator in consultation with the Resident Engineer.

B. Materials

All materials used to sleeve and seal utility facilities including but not limited to additional steel reinforcement, additional concrete, additional auger piles, lean concrete, extrudable hydrophilic waterstops, ribbed centerbulb waterstops, flowable fill, jet grout, sand, sleeves, link seal, and altering of any kind to sheeting and shoring systems, and any incidental hardware shall be

supplied by the Contractor, at no cost to Con Edison, and approved by the facility operator in consultation with the Resident Engineer. All conduit(s) shall be supplied to the Contractor's requested location by the facility operator for work under this item. The Contractor shall be required to inform Con Edison in advance of the need for link seal. The Contractor shall notify the facility operator(s) of the installation schedule at least 10 days before such materials are required on the site. The Contractor shall be responsible to unload, handle, store, deliver and/or distribute the material supplied by the facility operator(s) to the required job location(s) for the duration of the contract. It shall also be the Contractor's responsibility to inspect and verify upon delivery that the correct quantity of material has been delivered and to advise the facility operator(s), through its authorized representative, of all damaged material. The Contractor at no additional expense to the facility operator(s) shall replace any material that is damaged or lost after the Contractor's inspection and acceptance.

C. Methods of Construction

Upon the City and Con Edison's approval of the wall/gate redesign, all work shall comply with the specifications, plans and standards of the facility operator. Alternate sheeting means and methods and/or a combination of methods shall be covered by this section if proposed by the Contractor and approved by the facility operator in consultation with the Resident Engineer. It is the intent of this item to provide link seal around Con Edison's facilities on the flood side of the structure, install a sleeve running the entire length of the crossing, and in the remaining voids provide sand between the sleeve and utility as shown on Con Edison Dwg. EO-9230-C. Methods to perform this work shall be permitted if proposed by the Contractor and approved by the facility operator in consultation with the Resident Engineer.

Some of the existing coatings on oil-o-static pipes and/or return lines may consist of coal tar wrap and may contain asbestos and/or PCB's. Upon completion of hand excavation and unearthing (visual line of sight) of oil-o-static and return lines encroaching/exposed, the Con Edison representative must visually inspect all oil-o-static and return lines that are exposed during the performance of this contract. The Contractor shall notify the Con Edison representative to perform this inspection and subsequent testing where the coating appears to lack integrity. If the visual inspection/tests reveal the presence of asbestos and/or PCB's, the work will be considered "specialty work" and be performed by Con Edison forces or by a specialty Contractor hired by Con Edison in accordance with JB 302 and the latest version of G-8209. If any damage to the oil-o-static and/or return lines' field coating is caused by the Contractor, all costs associated with testing, any additional excavation in order to perform "specialty work" and any and all delays incurred shall be at the Contractor's expense. The Contractor will coordinate their operations to allow this work to be performed. The latest version of Con Edison Gas Operations Standard G-8209, System B will be the only method that will be allowed. The coating shall be verified and accepted by the Con Edison representative prior to backfilling.

D. Method of Measurement

The quantity to be measured for payment shall be each (EA) type of utility facility crossing the wall/gate through the wall itself, the foundation of the wall or the pile cap where the sleeve is installed, as encountered during construction and as directed by the facility operator in consultation with the Resident Engineer. The types of piles included under this specification include all various types of piles referenced in the Contract Drawings dated February 21, 2020 as defined below:

JB 118B = Utilities crossing through flood wall/gates on sheet piles
JB 118C = Utilities crossing through flood wall/gates on various types of individual piles

The various types of facility crossings (described below) shall be defined as "ranges" of their cross sectional areas, measured in square feet (SF) along a plane cutting through the trench parallel to the flood wall/flood gate. The area shall be a rectangle or square vertical plane enclosing and touching the outside limits of the utility. The sides of the rectangle or square shall be approximately level and plumb. When utility facilities are located and overlap at any point along the utility spans crossing the trench excavation and are over, or under and within one foot of each other, both horizontally and vertically, (except oil-o-static lines which shall be within two feet of each other), the utility facilities involved shall be considered, for the purposes of this section, as one utility crossing limited by the outside faces of the extreme pipes, conduits, ducts and/or duct banks. The cross sectional area to be measured shall be selected at the point of the greatest area along the utility spanning the trench excavation, as previously described. Each type of utility crossing shall be paid for separately. The types of utility crossings are defined as follows:

Type .1 = Cross sectional area of utility up to and including 0.75 SF
Type .2 = Cross sectional area of utility over 0.75 SF, up to and including 2.0 SF
Type .3 = Cross sectional area of utility over 2.0 SF, up to and including 6.0 SF
Type .4 = Cross sectional area of utility over 6.0 SF, up to and including 10.0 SF
Type .5 = Cross sectional area of utility over 10.0 SF, up to and including 20.0 SF

E. Price to Cover

The unit price bid for each of the various items shall cover the cost of the Contractor's wall/gate redesign, all labor, materials, equipment, insurance and incidentals necessary to sleeve and seal the utilities without disruption of service to the customers and in accordance with contract documents. Vibration monitoring shall be deemed included in the cost of all joint bid items (see general notes). Contractor to refer to the latest version of Con Edison Dwg. EO-9230-C for sleeve diameter and link seal details.

The unit price shall also include the cost of changes of sheeting means and methods and configuration where necessary to accommodate the utility, hand excavation within the zone of protection, removal of sheeting around the utilities, and the cost of any impact with maintenance and protection of traffic. The zone of protection varies for each type of utility facility and shall be determined by the facility operator and in consultation with the Resident Engineer. The unit price shall also include the cost of additional concrete, additional steel reinforcement, pile cap and pile design as directed by the facility operator in consultation with the Resident Engineer.

The price shall cover any costs incurred for the Contractor to coordinate with Con Edison forces or their Specialty Contractor to perform the visual inspection of exposed oil-o-static and return lines and additional excavation that may be required to perform testing if the existing field coating appears to lack integrity; modification of work methods and/or construction sequencing, any impact with maintenance and protection of traffic, and loss of productivity. Payment for field coating of oil-o-static feeder pipes, as required, shall be covered under JB 302 in accordance with the latest version of G-8209.

F. References

1. Item JB 302
2. Con Edison Gas Operations Standard G-8209 – Field Coating of Steel Pipe and Fittings Installed Underground and in Subsurface Structures
3. EO-9230-C

Details will be provided during construction when the extent of work included under this item is identified by the facility operator in consultation with the Resident Engineer.

JB 122 – INCREMENTAL COST FOR MGP CONTAMINANT EXCAVATION, TRANSPORTATION, HANDLING & DISPOSAL

A. Description

Under this section, the Contractor shall provide all incremental labor, materials, equipment, insurance and incidentals required to excavate, temporary sheeting/shoring, transport, handle and dispose of MGP (manufactured gas plant) contaminants, included but not limited to:

1. Soil
2. Dirt
3. Debris
4. Sediment
5. Groundwater

Historic MGP operations were conducted adjacent to the Project area from approximately 1848 to the mid-1940's, and consisted of two main manufacturing facilities: East 11th Street Works and East 21st Street Works, where MGP-related contamination from these historic MGP operations has migrated into the area of the Project. These facilities were operated by Con Edison predecessor companies.

These MGP facilities existed before the construction of natural gas pipelines. The plants converted coal, or a combination of coke or coal, oil and water in the form of steam into a gas that could be distributed and used as a fuel for heating, cooking, and lighting. Byproducts of the gas production conducted at the former MGP facilities, such as coal tar, impacted the soil and groundwater in the vicinity of plant operations. MGP-related contamination associated with the East 11th Street Works and East 21st Street Works has affected portions of the Project Area. A third facility, the East 14th Street Works, also operated near the Project Area, but MGP-related contamination from this facility reportedly remains on-site and is not anticipated to intersect the area of the flood protection structure construction.

In consultation with the NYS Department of Environmental Conservation (DEC) and Con Edison, the City has prepared a Mitigation Work Plan (the "Mitigation Plan") that has been approved by DEC to address potential environmental and health impacts associated with MGP-impacted materials during the construction of the project site in the area impacted by the MGPs (the "MGP Mitigation Area"). The Mitigation Plan is attached hereto as Exhibit A. The MGP Mitigation Area is shown in the map attached hereto as Exhibit B. [This Exhibit will be generated based on City's work plan for excavation for the wells and the overall project as well as the DEC-approved site investigations already conducted by Con Edison that delineate the areas within which MGP Waste may be encountered.]

This item includes the additional material and effort(s), above and beyond the contract drawings. In consultation with the Resident Engineer, all work shall be performed with all applicable safety standards as directed by the Resident Engineer.

B. Materials

All materials used to excavate, transport, handle and dispose of MGP Waste shall be supplied by the Contractor and approved by Con Edison in consultation with the Resident Engineer. The Contractor shall be responsible to excavate, transport, unload, handle, store, and/or deliver MGP Waste to the required disposal facilities for the duration of the contract. It shall also be the Contractor's responsibility to inspect and verify upon delivery that the correct quantity of MGP Waste has been delivered.

C. Methods of Construction

The Contractor shall provide Con Edison with at least thirty (30) business days' advance written notification specifying the dates of the commencement of excavation in the MGP Mitigation Area, including a projected schedule. The Contractor shall provide Con Edison a schedule every week for all work within the MGP Mitigation Area that is planned to be carried out in the upcoming two-week period involving the excavation, temporary sheeting and shoring, handling, loading, treatment and disposal of MGP Waste at and from the MGP Mitigation Area. The Contractor or Resident Engineer shall provide Con Edison with a copy of such test results indicating the presence or absence of MGP Waste within ten (10) business days after the Contractor receive such test results. The Contractor shall afford Con Edison the opportunity to collect split samples during the testing of any suspected MGP Waste.

The Contractor shall identify any suspected MGP Waste encountered in connection with construction within the MGP Mitigation Area by visual and olfactory inspection, and shall promptly notify Con Edison and the Resident Engineer of the initial identification of such suspected MGP Waste. The Contractor shall provide Con Edison and the Resident Engineer a reasonable opportunity to perform confirmatory visual and olfactory inspection of such material identified by the Contractor within twenty-four (24) hours of the Contractor's notice.

In the event of a dispute between Con Edison and the Resident Engineer, as to whether the identified material is in fact MGP Waste, their respective field representatives shall confer in good faith to attempt to resolve the dispute. If Con Edison and the Resident Engineer fail to so resolve the dispute within three (3) business days, then upon written notice of either party, the Contractor shall as promptly as possible collect samples of the disputed materials for submission to META Environmental, Inc., 2200 West 25th Street, Lawrence, Kansas 66047 or such other environmental testing laboratory that is reasonably acceptable to both Con Edison and the Resident Engineer.

The environmental testing laboratory shall perform testing of samples by forensic fingerprint analysis of polycyclic aromatic hydrocarbons ("PAHs") and alkylated PAHs (petrogenic and pyrogenic discrimination) and PAH source allocation to determine whether the disputed material contains residual materials likely to have been generated by the MGPs. The laboratory's determination shall be dispositive of whether the disputed materials are MGP Waste.

The Contractor shall comply with the following requirements with respect to the management and disposal of MGP Waste in the MGP Mitigation Area:

- Dispose of any MGP Waste at an appropriate Con Edison-approved waste disposal or treatment facility (i.e, Con Edison's Approved TSDF List (attached)).
- Use appropriately licensed and Con Edison-approved haulers for the transportation of MGP Waste.

- Comply fully with the Mitigation Plan, DEC requirements and directives, and all Environmental Laws, including implementation of any required Community Air Monitoring Program ("CAMP");
- Maintain within the vicinity of the MGP Mitigation Area a complete and accurate tracking log of all MGP Waste leaving the MGP Mitigation Area and provide a copy of such log to Con Edison upon completion of excavation for the ESCR Project;
- Sign all required manifests and shipping papers for the transportation, treatment and disposal of MGP Waste as the "generator" of such waste;
- Prohibit re-use of MGP Waste as backfill, landfill cover or for any other purpose;
- Provide Con Edison with final approved copies of the following documents within ten (10) business days after receipt of same from the Contractors: (1) maps or figures showing the locations where samples of soil, groundwater or other environmental media were collected from the MGP Mitigation Area; (2) chain of custody forms for all media and waste samples; (3) laboratory reports of the results of such media and waste samples; (4) any data summaries and data validation reports prepared for such samples; (5) weight tickets (sometimes referred to as bills of lading) indicating the volume of MGP Waste received by the disposal facility and (6) copies of completed waste manifests for all loads of MGP Waste; and
- Comply with legal requirements, rules, regulations, directives or orders issued by any governmental authority with respect to soil excavation for the project generally.

D. Method of Measurement

The quantity to be measured for payment shall be in volume (cubic yards). Disposal tickets and other documentation from the approved disposal facility must be submitted to Con Edison as proof.

E. Price to Cover

The price bid shall cover the incremental cost of all labor, materials, equipment, insurance and incidentals necessary to properly handle and dispose of MGP Waste without disruption of service and in accordance with contract documents. The price shall also include the cost of additional sample testing to properly identify and verify questionable MGP Waste.

As applicable, unit costs (e.g., price per ton, price per day, etc.) and estimated quantities (e.g., number of tons, number of days, etc.) shall be included in the bid for each of the following categories:

1. **Excavation, Transportation, Handling and Disposal of MGP Waste**:
   - Incremental costs of excavating, temporary sheeting and shoring, transporting, handling, disposal and managing MGP Waste from the MGP Mitigation Area due to the excavation activities required for construction of the project, including any waste characterization testing required due to the presence or reasonably suspected presence of MGP Waste; and
   - Incremental costs of manifesting, off-site transportation and off-site disposal of MGP Waste from the MGP Mitigation Area at appropriate Con Edison-

approved waste disposal or treatment facilities and by Con Edison-approved licensed haulers for transportation of such waste;

2. **Community Air Monitoring Plan for MGP Waste**
   - Incremental costs of implementation of the Community Air Monitoring Plan for MGP Waste in accordance with the Mitigation Plan.

3. **Odor Control for MGP Waste**
   - Incremental costs of implementation of controls necessary to manage, mitigate or control odors or vapors during excavation due to presence of MGP Waste in the MGP Mitigation Area in accordance with the Mitigation Plan;
   - Incremental costs of air monitoring necessary to assess worker exposure as a result of the presence of MGP Waste in the MGP Mitigation Area; and
   - Incremental costs of occupational health and safety precautions (e.g., odor control) taken as a result of the presence or potential presence of MGP Waste in the MGP Mitigation Area.

4. **DEC Waste Generation Fees**
   - DEC waste generation fees as a result of the presence of MGP Waste in the MGP Mitigation Area.

F. References

Currently, references are not available because NYSDEC has not provided a ruling/decision to the East Side Coastal Resiliency project. When a ruling/decision is made, it will be a reference to this item specification. Note that this item specification may be revised based on the provided ruling/decision in the future.

JB 123 – INSTALLATION OF A COMPOSITE CARBON FIBER SYSTEM ENCAPSULATION OF UNDERGROUND TRANSMISSION FEEDERS AND RETURN LINES

A. Description

A.1 SCOPE

A.1.1 The Refurbishment of the Transmission Feeder Pipes is a proactive program to reduce dielectric fluid leaks and increase the availability and reliability of transmission facilities. This program focuses on addressing areas of corrosion on the high pressure fluid filled (HPFF) pipe-type transmission feeder system, and involved the installation of composite carbon fiber system.

A.1.2 This specification provides the requirements for the installation of a high strength composite carbon fiber pipeline reinforcement system to serve as a secondary pressure boundary for approximately 2,000 trench feet (TF) of HPFF feeder pipes 10" nominal pipe size and smaller (excluding any repairs/barrels). The final composite will provide a structurally independent composite pipe capable of withstanding 100% of the internal pressure of the feeder pipes. The composite system will also serve to enclose the existing asbestos containing material (ACM) coal tar coating or green tape primer-less butyl rubber tape coating that is currently on the feeder pipes.

A.1.3 DEFINITIONS

Consolidated Edison of New York shall herein be referred to as "Con Edison."

The person or persons performing the work detailed in this specification shall herein be referred to as the "Contractor."

The term "Engineer" shall be understood to refer to the Con Edison Central Engineering Department Lead Engineer.

The term "Con Edison Field Representative" shall be understood to refer to the Con Edison Employee(s) designated as the contact for the Contractor.

A.1.4 Work shall be performed by a certified carbon fiber application Contractor. Con Edison will provide a list of approved carbon fiber application vendors.

A.1.5 No Text.

A.1.6 The Contractor shall be prequalified in accordance with Appendix I.

A.1.7 Safety Data Sheets (SDS) and Technical Data Sheets (TDS) shall be supplied for all materials installed or used during the project. SDS sheets must be approved by the Company for use prior to the start of the project per CEHSP S09.02.

A.1.8 All work performed by the Contractor in subject to the approval and acceptance of the Company. Any work not meeting approval shall be corrected by the Contractor at their expense, until such work is approved and accepted by the Company Representative.

A.1.9 Any failure of the Contractor to acquaint themselves with all available information shall not relieve from their responsibility to perform the work and to properly estimate the difficulty and cost.

A.1.10 Contractor shall record/GPS survey the adhesion zones of the carbon fiber application.

NOTE: Contained throughout this specification are material references and data requirements from Advanced Fiber Reinforced Polymers (FRP) Systems Inc. Any substitutions shall be considered only after a submittal is presented to Con Edison identifying all technical comparisons for review and approval. If an alternative material is accepted the Contractor must comply with the requirements of this Specification, and any modifications to incorporate the proposed material.

A.2 PROJECT DESCRIPTION

A.2.1 The project scope includes carbon fiber pipe enhancement and encapsulation along the East Side of Manhattan on eight (8) pipes including four (4) feeder pipes and (4) cooling return pipes.

A.2.2 Transmission feeder pipes are 5", 8" and 10" nominal pipe size (varying) and cooling return pipes are 5", 7" and 8" nominal pipe size (varying) with repair barrels of varying diameters, lengths and locations.

A.2.3 The Contractor's Con Edison approved asbestos abatement contractor shall abate the existing ACM coal tar or primer-less butyl rubber tape coating from the adhesion zones. (This assumes Con Edison is filing for ACM abatement and for DOL Variance for Removal of Coal Tar Wrap on Feeder Pipes pending assistance and information from Contractor, carbon fiber vendor and/or Con Edison approved asbestos abatement contractor.)

A.2.4 The Contractor's Con Edison approved asbestos abatement contractor shall install a composite carbon fiber system coated with a holiday free, non-conductive, impact and abrasion resistant protective epoxy. However, the epoxy layer considered to be the first ACM encapsulation must be performed by the Con Edison approved asbestos abatement contractor/vendor.

A.2.5 The Contractor shall be responsible for implementing all quality control and quality assurance (QA/QC) requirements and following the Inspection Test Plan (ITP). Installation requirements will include: plasticizing trench, pipe surface abatement and preparation, carbon fiber application, managing

environmental conditions (as required) throughout the installation process, and all nondestructive and destructive testing requirements.

A.2.6 The Contractor will be responsible for sufficient surface preparation, maintaining environmental conditions, a clean debris free work area, and detailed record of daily job activities and progress.

A.2.7 The Contractor shall be responsible for installing a low-profile mechanical clamp at any active leak locations on the pipe.

A.2.8 Con Edison shall install a barrel repair over any active leak mitigated with low profile clamp.

A.2.9 The Contractor shall use Dynamic Response Spectroscopy (DRS), ASTM D4541 Adhesion Test and ASTM D3039 Tensile Test to evaluate the quality of carbon fiber application within the adhesion zones. A flaw in the Carbon Fiber application can be identified by a loss of DRS response signal to the steel (See Appendix II), failure of the adhesion test plate or failure of the tensile test samples. A failure will require installation of a new Adhesion Zone.

A.2.10 The Contractor shall be responsible to repair any work that does not meet the visual and non-destructive test criteria.

A.3 PROTECTION OF THE COMPANY

A.3.1 Any damage caused by the Contractor to Con Edison property during the performance of their work shall be repaired/replaced in-kind in a timely manner to the satisfaction of the Con Edison Field Representative, and at no additional cost to Con Edison.

B. Materials

B.1 VENDOR QUALIFICATION PROCESS

B.1.1 All Contractors shall successfully complete the Vendor Qualification process (See Appendix I)

B.1.2 Listed below are the approved materials for the carbon fiber application process. Any substitution requires Con Edison approval and must have properties equivalent or superior to than those listed below.

B.1.2.1 **Thick Film, ACM protection system – FRP Tack Coat 110 HT (Minimum Requirements)**

a. Strongly adheres to steel and composites

b. Assists in application of reinforcing composites, adheres pre-cured sheets to steel, and maintains its structural properties up to 250°F.

c. Performance Data Table:

Property	Test Method	Results
Adhesion to Steel	ASTM D4541	>3,000 psi
Heat Distortion Temp.	ASTM D648	306°F
Tensile Strength	ASTM D638	11,900 psi
Tensile Modulus	ASTM D638	634 ksi
Flexural Strength	ASTM D790	19,900 psi
Flexural Modulus	ASTM D790	677 ksi
Compressive Strength	ASTM D695	14,100 psi

d. Cure Schedule:

	50°F	75°F	100°F
Dry to Touch	10 hours	6 hours	3 hours
Dry Hard	48 hours	24 hours	12 hours
Overcoat Window	10-128 hours	6-96 hours	3-48 hours
Return to Service	N/A	24 hours	12 hours
Full-Mechanical Strength	N/A	120 hours	72 hours

The FRP Tack Coat 110 material shall be applied via brush or roller and hang at a minimum of 40 mils per coat.

B.1.2.2 **High Strength Epoxy Adhesive #1 – FRP 120 HT (Minimum Requirements)**

a. Strongly adheres to blasted steel and composites

b. Performance Data Table:

Property	Test Method	Results
Adhesion to Steel	ASTM D4541	>4,000 psi
Heat Distortion Temp.	ASTM D648	297°F
Tensile Strength	ASTM D638	13,100 psi
Tensile Modulus	ASTM D638	479 ksi
Flexural Strength	ASTM D790	12,800 psi
Flexural Modulus	ASTM D790	398 ksi
Compressive Strength	ASTM D695	9.4%

c. Assists in application of reinforcing composites used in high pressure applications and provides 4,000 psi adhesion strength to properly blasted steel.

d. Cure Schedule:

	50°F	75°F	100°F
Dry to Touch	10 hours	6 hours	3 hours
Dry Hard	48 hours	24 hours	12 hours

Overcoat Window	10-128 hours	0-96 hours	0-48 hours
Return to Service	N/A	24 hours	12 hours
Full-Mechanical Strength	N/A	120 hours	72 hours

e. The epoxy material shall be applied via brush or roller and hang at a minimum of 10 mils per coat

B.1.2.3 **Heavy Weight Bi-Directional Glass Fabric – FRP GF 300-BD (Minimum Requirements)**

a. High strength composite used as a galvanic barrier between carbon fiber and steel surface.

b. Performance Data Table:

Property	Test Method	Results
Coefficient of Linear Thermal Exp.	ASTM E831	5.71 x 10^(-6) in/in °F
Thermal Conductivity		1.2 W/m K
Tensile Strength	ASTM D3039	70,000 psi
Young's Modulus	ASTM D3039	1,260 ksi
Effective Fabric Thickness		0.031 psi
Lap Shear	ASTM D3165	3,210 psi
Flexural Strength	ASTM D790	72,000 psi
Flexural Modulus	ASTM D790	398 ksi
Elongation at Break	ASTM D638	5.7%

c. Material must be at least 30 mils in thickness and shall have a low electrical conductivity.

B.1.2.4 **High Temperature Composite Saturating Resin – FRP 210 HT (Minimum Requirement)**

a. Strongly adheres to blasted steel and composites.

b. Low in viscosity to ensure complete saturation of Carbon and Glass fiber during the installation.

c. Performance Data Table: (Unreinforced Resin)

Property	Test Method	Results
Flexural Strength	ASTM D790	19,100 psi
Flexural Modulus	ASTM D790	551 ksi
Tensile Strength	ASTM D638	15,600 psi
Tensile Modulus	ASTM D638	496 ksi
Compressive Strength	ASTM D695	11,900 psi
Adhesion to Concrete	ASTM D4541	>750 psi
Adhesion to Steel	ASTM D4541	3,000 psi

Heat Distortion Temperature	ASTM D648	>400°F
Maximum Operating Temp	N/A	395°F

d. Cure Schedule:

	50°F	75°F	100°F
Dry to Touch	9 hours	6 hours	3 hours
Dry Hard	24 hours	12 hours	6 hours
Overcoat Window	0-168 hours	0-96 hours	0-72 hours
Cure for Service	24 hours	12 hours	6 hours
Return to Service	N/A	48 hours	24 hours
Full-Mechanical Strength	N/A	96 hours	72 hours

B.1.2.5 **Carbon Fiber – FRP CF 500-BD (Minimum Requirement)**

a. Carbon fiber shall be a minimum of 12K, 2 x 2 twill weave, aerospace quality, high strength, bi-directional woven fabric. A minimum weight of 19.5 oz/yd^3.

b. Performance Data Table:

Property	Test Method	Results
Coefficient of Linear Thermal Exp.	ASTM E831	3.78 x 10-6 in/in °F
Tensile Strength	ASTM D3039	Actual Value: 102,000 psi Design Value: 77,000 psi
Young's Modulus	ASTM S3039	Actual Value: 5,667 ksi Design Value: 4.038 ksi
Poisson's Ratio	ASTM S3039	0.091
Lap Shear	ASTM D3165	3,450 psi
Sheer Modulus	ASTM D5379	362,650 psi
Flexural Strength	ASTM D790	Actual Value: 100,200 psi Design Value: 75,150 psi
Compressive Strength	ASTM D695	Actual Value: 111,750 psi Design Value: 88,125 psi
Elongation at Break	ASTM D3039	1.5%
Effective-Fabric Thickness	N/A	0.0375 in

B.1.2.6 **High Performance Epoxy Top Coating System – FRP HP-300 Epoxy (Minimum Requirement)**

a. Strongly adheres to blasted steel and composites

b. Performance Data Table: (Unreinforced Resin)

Property	Test Method	Results
Abrasion Resistance	ASTM D4060; CS17 wheel, 1Kg	56.2 mg-loss/1000 cycles

Adhesion to Steel	ASTM D4541	>2000 psi
Head Distortion Temp.	ASTM D648	141°F
Direct Impact Resistance	ASTM D2794	116 in lbs.
Immersion Resistance	Fresh and Salt water; 1 year	No Rust, no blistering, no loss of adhesion
Humidity Resistance	ASTM D4585; 10,000 hours	No rust, no cracking, no loss of adhesion
Dry Heat Resistance	ASTM D2485	250°F (121°C)

c. Cure Schedule:

	50°F	75°F	100°F
Dry to Touch	24 hours	12 hours	8 hours
Dry to Handle	72 hours	36 hours	24 hours
Overcoat Window	24-168 hours	12-120 hours	8-96 hours
Cure for Service	36 hours	24 hours	12 hours
Return to Service	48 hours	36 hours	24 hours
Full-Mechanical Strength	168 hours	120 hours	72 hours

The material shall be applied via brush or roller and should hang at a minimum of 30 mils per coat.

B.1.2.7 **High Build Epoxy Repair Putty – FRP Repair Putty**

a. Strongly adheres to concrete, steel, masonry, wood and composites

b. The High build epoxy putty shall hang at a minimum of ½ inch per layer at 70°F.

c. The High Build Putty shall be designed to repair and rebuild damaged or corroded areas and can be used on weld seems, filling pits, holes, physical damage and for resurfacing areas.

d. Performance Data Table: (Unreinforced Resin)

Property	Test Method	Results
Density		1.11 g/mL
% Solid		100%
Heat Distortion Temp	ASTM D648	155°F
Compressive Strength	ASTM D695	15,400 psi
Tensile Strength	ASTM D638	7,600 psi
Tensile Modulus	ASTM D638	398 ksi
Flexural Strength	ASTM D790	13,800 psi
Flexural Modulus	ASTM D790	502 ksi

Adhesion to Steel		>3,000 psi

e. Cure Schedule:

	55°F	70°F	85°F
Overcoat Window	14-168 hours	8-120 hours	4-72 hours
Dry to Touch	14 hours	8 hours	4 hours
Functional Cure	36 hours	24 hours	12 hours
Full Mechanical Strength	168 hours	120 hours	72 hours

The material shall create a smooth surface free of gaps, sharp edges, and voids for full composite reinforcement effectiveness.

B.2 WORK TO BE PERFORMED BY CONTRACTOR

B.2.1 GENERAL REQUIREMENTS

B.2.1.1 The scope of work includes, but is not necessarily limited to, furnishing of all installation, demolition, supervision, labor, services, material, temporary lighting, tools, precision instruments, supplies, expendables, and equipment necessary to: purchase and/or receive, unload, haul, store (if necessary), remove from storage, truck, demolish/remove or relocate, assemble, install, set in place, and all other work as required for project completion. This encompasses all related activities such as purchasing, receipt, inspections, testing and other associated operations for all materials, structures, equipment and accessories as described herein.

B.2.1.2 The Contractor shall provide all labor, materials, tools, equipment, and supervision required to perform all work that is detailed in this specification and shown on the contract drawings, unless otherwise noted.

B.2.1.3 The Contractor shall procure a qualified Application Expert from the respective OEM to oversee the application of the composite system.

B.2.1.4 The Contractor shall follow OSHA requirements and all other applicable existing Federal, State and Local Regulations.

B.2.1.5 Contractor shall provide environmentally controlled areas for chemical storage, mixing of the polymers and saturation of the carbon fiber.

B.2.1.6 Compressors, blasting equipment and spray equipment shall have all appropriate moisture and oil traps, regulators and gauges, and shall be in good working order.

B.2.1.7 Contractor shall provide all required environmental enclosures with any required environmental control equipment, such as heaters and

dehumidifiers, to ensure that the environmental conditions comply with the OEM product recommendations.

B.2.1.8 The Contractor shall maintain a clean environment within the trench at all times. The flame retardant plasticizing used in the trench must be maintained to ensure debris does not contaminate the ongoing carbon fiber work.

B.2.1.9 Prior to abrasive blasting, the Contractor shall take ultrasonic testing (UT) readings at three equally spacing distances at the 3, 6, 9, and 12 o'clock position in the adhesion zone. All UT readings must be above minimum wall thickness of 0.161" in order to proceed with grit blasting. The readings shall be equally spaced every 6 inches along the 3-feet section and reviewed and approved by the Con Edison Engineering Representative.

B.2.1.10 Prior to abrasive blasting, all existing primer-less butyl rubber tape coating and any ACM coal tar shall be removed in the adhesion zone according to local, state and federal regulations.

B.2.11 If any oil residue is present on the adhesion zone prior to grit-blasting the Contractor shall clean the adhesion zone with an approved industrial degreaser to remove any residual oil contamination from the substrate. *Oil removal must be done prior to grit blasting.*

B.2.12 The Contractor shall assure Con Edison the remainder of the pipe (the non-adhesion zone) is free of dirt and loose debris. Any existing coatings that are raised from the substrate by more than ½ inch much be removed prior to composite wrapping. Any exposed steel surface shall be coated with an approved galvanic barrier including the FRP Repair Putty or GF-300 BD/210 Saturant.

B.2.2 TRAFFIC CONTROL MEASURES

B.2.2.1 The Contractor shall abide by all traffic control requirements in accordance with the Manual on Uniform Traffic Control Devices (MUTCD) documents provided by Con Edison and/or New York City Department of Transportation regulations.

B.2.3 PROTECTION OF PEDESTRIANS

B.2.3.1 The Contractor shall abide by all requirements for Pedestrian Protection as specified in the MUTCD NYC BC Chapter 3307 and OSHA and DOT regulations.

B.2.4 ACM CONTAINING COAL TAR REMOVAL

B.2.4.1 Since the identified work area for this project has been previously refurbished using a combination of primer-less butyl tape coating and/or ACM-containing coal tar coating should be encountered. Any ACM-containing coal tar coating discovered in the course of the work, removal and disposal of Coal Tar shall be performed in accordance with asbestos-related notifications and variances and other permits submitted/obtained by Con Edison per Section E.3.12.

B.2.4.2 Unless documentation is available to the contrary, all Coat Tar shall be considered to be contaminated with ACM.

B.2.4.3 All workers that may be exposed above the Action Levels shall have biological monitoring provided for them in the form of blood sampling and analysis.

B.2.4.4 No welding or burning of Coal Tar surfaces shall be allowed. The contaminated surfaces in the adhesion zones shall be abated using a Con Edison approved method.

B.2.4.5 Only properly trained and approved Asbestos Handlers shall be involved in the abatement process. All surfaces shall be abated following regulatory guidelines for ACM abatement.

B.2.4.6 Asbestos awareness training shall be provided to all personnel working on a contaminated site, even if their jobs do not involve direct handling of contaminated materials.

B.2.4.7 The Contractor shall not use any electric or pneumatic rotating or other power tools to abate or come in to contact with existing coal tar coatings.

B.2.4.8 For any activity identified as potentially causing airborne discharge of ACM, an initial exposure assessment shall be performed by an Asbestos Handler to determine the exposure of personnel to ACM.

B.2.4.9 Appropriate personal protective equipment (PPE) shall be worn to prevent exposure of personnel and contamination of garments and other items.

B.2.4.10 A controlled area shall be established around the worksite that is demarcated by barricades or barrier tape and restricts access to authorized individuals.

B.2.4.11 ACM warning signs shall be posted at boundary of work area.

B.2.4.12 For the duration of the project, all surfaces in the work area, including floors, walls, and steps shall be maintained as free of accumulation of ACM containing materials including paint chips, dust, and corrosion to the extent practical.

B.2.4.13 When vacuuming is necessary, only High-Efficiency Particulate Air (HEPA) equipped vacuums shall be used.

B.2.4.14 Contaminated waste, such as paint chips, coal tar, and used blast media shall be stored in sealed 55 gallon drums. Waste shall be disposed of at a Con Edison approved waste site.

B.2.4.15 For all areas outside of adhesion zones, upon completion of hand excavation and unearthing (visual line of sight) of oil-o-static and return lines exposed under JB 405A, the Con Edison representative must visually inspect all oil-o-static and return lines. The Contractor shall notify the Con Edison representative to perform this inspection and subsequent testing where the coating appears to lack integrity. If the visual inspection/tests reveal the presence of asbestos and/or PCB's, the repair and remediation will be performed by the Contractor's Con Edison approved asbestos abatement contractor in accordance with JB 302 and the latest version of G-8209. The latest version of Con Edison Gas Operations Standard G-8209, System B will be the only method that will be allowed. The coating shall be verified and accepted by the Con Edison representative prior to performance of the application of composite reinforcement system.

B.2.4.16 Prior to any transmission facility pipe movement, the Contractor shall request for permission to move any Con Edison electric transmission facility from the Con Edison on-site construction representative. The Con Edison on-site construction representative will request permission from the Con Edison Energy Control Center. Prior to the Contractor moving pipes in any direction, approval through the Con Edison on-site construction representative is required.

B.2.4.17 To perform electric transmission facility pipe adjustments that may be required for repair, remediation, abatement activities and/or carbon fiber application process, repair activities; the Contractor shall have and use acceptable equipment to lift/move pipes as necessary. Acceptable equipment for lifting feeder/oil return pipes include: air bag systems with appropriate regulators/controllers or come-alongs/chain hoists with nylon slings around pipes only. Excavation equipment (such as a backhoe) or other hydraulic hoists or jacks are not to be used.

B.2.4.18 Construction activities will be halted if, due to vibrations, electric transmission facilities coating is damaged and needs to be repaired. Any and all delays incurred shall be at the expense of the Contractor.

B.2.5 APPLICATION OF COMPOSITE REINFORCEMENT SYSTEM

B.2.5.1 The Contractor shall ensure that the environmental conditions including air, surface temperature, relative humidity, and dew point are within the specified range according to the most current Manufacturer's product data sheets for its application.

B.2.5.2 The Contractor shall provide environmental protection as required.

B.2.5.3 Prior to application, all epoxy materials shall be thoroughly mixed according to the Manufacturer's product data sheet.

B.2.5.4 The Contractor shall verify that no active leaks are present before the application of the carbon fiber system. Any active dielectric fluid leaks shall be repaired with a mechanical clamp installed by contractor followed by a welded barrel repair by Con Edison.

B.2.5.5 All transmission pipes subject to composite reinforcement work shall be temporarily supported after excavation with nylon straps or slings and sand bags every 20 feet, throughout the length of the excavation.

B.2.5.6 The Contractor shall remove any existing, loose coating/tape along the length of the pipe that will interfere with composite system application.

B.2.5.7 If the piping systems are found to have ACM containing coatings, the Contractor shall enclose the existing coating with the FRP Tack Coat 110 HT with a dry film thickness of 40 to 60 mils.

HOLD POINT: Visual inspection to ensure no ACM material is exposed

B.2.5.8 All weld seams, bolt heads, support clamps, composite claps, and areas with removed coating/green tape shall be covered with FRP Repair Putty to create a smooth transition zone between surfaces, prior to the application of the carbon fiber composite system.

B.2.5.9 All weld caps and barrel terminations shall have the FRP Repair Putty applied to create a smooth transition for subsequent composite wrapping. Alternatively, prefabricated pieces may be adhered to the pipe to provide a smooth transition. To use prefabricated pieces, Contractor must submit designs for each piece for Con Edison approval.

HOLD POINT: Visual inspection shall be performed prior to application of FRP 120 HT adhesive to ensure the pipe is smooth and properly prepared for composite installation and sufficiently cured.

B.2.5.10 FRP 120 HT Adhesive shall be applied via brush/roller at 10 – 15 mils WFT. Adhesive should be applied to the entire pipe section being wrapped that day.

B.2.5.11 The carbon fiber composite shall be installed in circumferential bands that wrap twice around the circumference of the pipe plus an extra six (6) inches for overall. Two (2) feet clearance around each individual pipe for installation of the carbon fiber composite is preferred with one (1) foot minimum clearance required. Refer to JB 402B for criteria to adjust oil-o-

static pipes and return lines horizontally and/or vertically as required to install carbon fiber composite.

In low clearance areas single layers plus six (6) inches for overlap can be used.

B.2.5.12 The carbon fiber shall be saturated with FRP 210 HT – Saturating Resin according to the manufacturer's specifications prior to installation on the pipe.

B.2.5.13 The saturated carbon fiber should be rolled onto an application roll, then brought to the application area and wrapped in discrete hoops around the pipe.

B.2.5.14 As the carbon fiber is wrapped around the pipe in discreet hoops, any air behind the composite shall be removed by hand during the wrapping process.

B.2.5.15 Air pockets shall be removed by massaging the carbon fiber in the direction of the wrap so the wrap tightens onto the pipe as the air is removed.

B.2.5.16 Subsequent bands of carbon fiber applied to the pipe must have a six (6) inch overlap over the previously installed band. Longer overlaps are acceptable when required to end at a specific point.

B.2.5.17 The first double layer of carbon fiber shall stop 3 – 5 inches away from any pipe support edges.

B.2.5.18 The second double layer of carbon fiber wrap shall start with a 12 inch wide band in order to stagger the seams between layers. All remaining carbon fiber layers after the 12 inches wide band can be 25 inches in width unless a barrel or other special condition is present.

B.2.5.19 The second layer shall be wrapped in the same direction as the first layer to ensure the layers are all tighten on the pipe as they are applied.

B.2.5.20 The second double layer of Carbon fiber shall continue down the pipe with a 4 – 6 inch overlap between circumferential bands.

B.2.5.21 The second double layer of carbon fiber shall stop 6 – 10 inches away from the pipe support edge.

B.2.5.22 The third double layer of carbon fiber wrap shall start with a 25 inch wide band in order to stagger the seams between layers. All remaining carbon fiber layers can be 25 inches in width unless a barrel or other special condition is present.

B.2.5.23 The third double layer of Carbon fiber shall continue down the pipe with a 4 – 6 inch overlap between circumferential bands.

B.2.5.24 The third double layer of wrapping shall stop 9 – 15 inches away from the pipe support edge.

B.2.5.25 A minimum of six layers of composite carbon fiber shall be installed over the entire pipe section. All six single layers or three double layers shall be applied in each area before the end of each shift.

B.2.5.26 Contractor shall at a minimum comply with the listed recommended remediation process if water intrusion into the trench occur:

a. Water intrusion into the trench at any time during the carbon fiber application process – The trench shall be drained and plasticizing shall be replaced as required, to ensure a clean work environment

b. Water intrusion prior to wrapping or applying polymer – The pipe surface and trench area is dry prior to applying carbon fiber system. If the adhesion zones area flood and flash rusting occur, reblast any rust contamination in the adhesion zone.

c. Water intrusion after the adhesive application, prior to wrapping with carbon fiber – Stop coating or wrapping carbon fiber. When the trench is drained, ensure the pipe surface is dry and free of dirt and debris. Sand the pipe surface then remove dust by wiping surface with an approved solvent and apply FRP 120 HT adhesive then continue the wrapping process.

d. Water intrusion in the middle of the wrap process – Stop the wrapping application. When the trench is drained ensure the pipe surface is clean, dry, and free of all debris. Sand the surface of the carbon fiber to ensure good adhesion for the next layer. Remove all dust, clean with an approved solvent, and apply FRP 120 HT and continue wrapping until the specified 6 or 8 layers.

e. Water intrusion after all 6 or 8 layers of carbon fiber are applied – When the trench is drained, verify the pipe is dry. Sand the surface of the carbon fiber to ensure good adhesion for the next coating. Remove all dust, clean the surface by wiping with an approved solvent, and apply the HP-300 Epoxy Topcoat.

f. Water intrusion after the application of HP-300 topcoat, and prior to full cure of the HP-300 – When the trench is drained, visually inspect the top coat for defects due to abrasion from the sand or soil. If defects are present, remove all debris and dust, sand the surface of the pipe, clean with a solvent and reapply an additional layer of HP-300 topcoat.

g. Water intrusion after HP-300 topcoat has reached a functional cure requires no remediation.

B.2.5.27 HOLD POINT: Visual inspection and tap testing shall be performed once the composite has cured for a minimum of 48 hours

B.2.5.28 The final epoxy coating of HP-300 Epoxy shall be mixed and applied to the outside of the pipe with a brush or roller at a total DFT of 15 – 20 mils DFT per coat. The pipes shall have a minimum of three (3) coats to ensure no holidays are present.

B.2.5.29 The HP-300 Epoxy will be applied in a grey first then a second coat in red and the final coat shall be in grey as the final product with an exception to the adhesion zones, which will be red then grey then red on top.

B.2.6 CARBON FIBER ADHESION ZONES

B.2.6.1 Adhesion zones shall have a minimum length of three (3) feet. The green tape or existing ACM coating shall be completely abated for four (4) feet of pipe to provide a buffer zone for grit blasting on either side of the adhesion zone.

B.2.6.2 An adhesion zone shall be installed at least every 100 ft on a straight length of pipe without a barrel, weld cap or other interruption present.

B.2.6.3 Prior to abrasive blasting, the Contractor shall take ultrasonic testing (UT) readings at three equally spacing distances at the 3, 6, 9, and 12 o'clock position in the adhesion zone. Visual inspection for pitting shall also be performed. The test data shall be documented and submitted to the Con Edison Engineering Representative for review and approval. All UT reading must be above minimum wall thickness of 0.161" and any pitting shall have the pit depth analyzed prior to proceeding with grit blasting.

B.2.6.4 The Con Edison Engineering Representative shall provide documented approval prior to grit blasting the adhesion zone.

B.2.6.5 The Contractor shall contain any dust created by grit blasting to ensure it is not released in to the environment and does not contaminate the remainder of the work space.

B.2.6.6 Prepare the adhesion zone by abrasive blasting with 16 or 20 mesh aluminum oxide, in accordance with surface preparation standard NACE 2/SSPC-SP-10 "Near White Metal Blast Finish" with a 3 mil minimum angular profile.

B.2.6.7 HOLD POINT: Third-Party Inspector to verify blast cleanliness and profile via Testex replica tape

B.2.6.8 The adhesion zone shall be vacuumed by the Contractor to eliminate any residual dust on the surface.

B.2.6.9 After the adhesion zones are cleaned the Contractor shall apply 10 – 15 mils of FRP 120 HT via brush/roller.

B.2.6.10 Contractor shall cut out a section of GF-300 BC is a bi-directional glass fiber which serves as a galvanic barrier.

B.2.6.11 Contractor shall saturate GF 300-BD Glass Fabric with FRP 210 HT Saturating resin and wrap the glass fiber around the entirety of the adhesion zone and any bare metal adjacent to the adhesion zone.

B.2.6.12 GF-300 BD must be wrapped around the entire adhesion zone extending at least two (2) inches past the end of the exposed steel on both sides of the adhesion zone.

B.2.6.13 HOLD POINT: Visual inspection of the adhesion zone or bulk of pipe must be performed prior to wrapping to ensure there is no bare steel that hasn't been covered.

B.2.6.14 All six (6) layers of CF-500 BD shall be wrapped around the adhesion zone as specified in Section B.2.5.

B.2.6.15 Prior to application of HP-300 Epoxy topcoat, an additional two (2) layers of CF-500 BD shall be wrapped around the adhesion zone, extending at least six (6) inches past the end of the adhesion zone.

B.2.6.16 The adhesion zones will have a third layer of HP-300 Epoxy installed. The final color will be red to clearly define the adhesion zones upon future excavation.

B.2.7 CURING OF THE COMPOSITE SYSTEM

B.2.7.1 Surface and environmental conditions must be maintained within the specified range by the OEM for the entirety of the curing process. See the technical data sheets for each product for the temperature dependent curing times.

B.2.8 QUALITY CONTROL REQUIREMENTS

B.2.8.1 Third-Party NACE Level III Inspector's shall have a minimum of a NACE Level III certification, and minimum of five (5) years of experience.

B.2.8.2 The Third-Party NACE Level III Inspector shall be responsible for monitoring environmental conditions in the trench/enclosure, the mixing area, and the material storage area.

B.2.8.3 The Third-Party NACE Level III Inspector shall be responsible for documenting the job progress by taking photos, and or videos of work performed.

B.2.8.4 The Contractor's QA/QC Manager, in conjunction with the Third-Party NACE Level III Inspector shall be responsible for keeping a tally of the batch numbers for all polymers and composite fabrics and recording the batch numbers used on each pipe.

B.2.8.5 The Third-Party NACE Level III Inspector shall perform visual inspection, including tap testing to find any air bubbles and delamination in the composite. QA/QC manager in conjunction with the Third-Party NACE Level III Inspector shall document all defects, application issues, improper environmental condition, water intrusion issues, or other Non-conformances with the specification and submit the appropriate QC reports.

B.2.8.6 The Third-Party NACE Level III Inspector shall verify the adhesive zone grit blasted to NACE 2/SSPC-SP-10 "Near White Metal Blast Finish" with a 3 mil minimum angular profile as verified by a minimum of three (3) pieces of Testex replica tape per adhesion zone per pipe.

B.2.8.7 Each day that composite wrapping is taking place, the Contractor shall furnish a two layer, 12" x 12" sample of CF-500 BD saturated with FRP 210 HT. The Third-Party NACE Level III Inspector shall be present to witness the panel preparation. These samples shall be reserved for destructive testing by a Con Edison approved Third-Party Test Lab, to verify the tensile strength of the composite.

a. The Third-Party NACE Level III Inspector in conjunction with the Contractor's QA/QC manager shall fill out to appropriate QC form for each 12" x 12" sample and document the batch numbers, date applied, and location where was taken from/applied on the sample once it has cured.

b. The coupon shall be tested in accordance with ASTM D3039 Tensile Strength for individual tensile strength values.

c. Minimum tensile acceptable strength is 85,600 psi, or 80% of the maximum tensile strength of the CF-500 BD saturated with FRP 210 HT Saturating resin,

d. If the sample failed between 53,500 and 85,600 psi tensile strength three (3) additional layers of CF shall be applied to the location where the sample was taken.

e. If the sample fails at less than 53,500 psi tensile strength, six (6) additional layers of CF shall be applied to the location where the sample was taken.

f. If an individual tensile strength value falls below the threshold, two additional tensile strength values shall be measured, and the results submitted to Con Ed Engineering for review and approval.

g. A photograph should be taken of each panel prior to submitting them to the lab for analysis to assist in any analysis for a failed sample.

h. In the event of a failed tensile test sample, the Contractor shall prepare a root cause analysis report for each panel/coupon failure and submit to Con Ed Engineering for review and comment.

B.2.8.8 The Contractor shall be required to prepare one (1) 12" x 12" grit blasted ¼" plate to NACE 2/SSPC-SP-10 "Near Whit Metal Blast Finish" with a 3 mil minimum angular profile every shift they are grit blasting an adhesion zone. The plate shall be primed with 10 – 15 mils of FRP 120 HT then one (1) saturated layer of 12" x 12" GF -300 BD shall be applied followed by one (1) saturated layer of 12" x 12" CF-500 BD then one (1) saturated layer of 6" x 12" CF-500 BD. A minimum of four (4) adhesion test dollies shall be placed on both the single, and double layer sides of the carbon fiber sample plate for a total of eight (8) dollies. The plate samples shall be allowed to cure for a minimum of 96 hours at 75°F. The sample shall be reserved for destructive testing done by the Contractor in accordance with ASTM D4541, witnessed by the Third-Party NACE Level III Inspector, a Con Edison Representative and the composite OEM Application Expert. Refer to Appendix VI.

B.2.8.9 The Contractor's QA/QC manager in conjunction with the Third-Party NACE Level III Inspector shall be required to collect the following data for each Tensile Test sample and Adhesion Test plate prepared:

a. Batch numbers of all products used to create the sample

b. Ambient temperature and humidity of application area

c. Date of the application

d. Location and pipe identity that were wrapped that day or Location of corresponding adhesion zone.

e. List of application team members associated with the creation of the carbon fiber samples.

B.2.9 APPLICATION INSPECTION AND REPAIRS

B.2.9.1 A thorough visual inspection and tap test shall be performed by the Third-Party NACE Level III Inspector at least 2 days after the CF-500 BD has cured. Any air bubbles, wrinkles, delamination, lifted edges or other defects will be clearly marked to identify the area of the defect. The QA/QC manager in conjunction with the Third-Party NACE Level III Inspector will fill out the appropriate NCR form to document the defect.

B.2.9.2 Approved air bubble repair techniques are shown in Appendix IV Section 3.0.

B.2.9.3 After application of the HP-300 Epoxy topcoat, the Third-Party NACE Level III Inspector shall perform a thorough visual inspection of the pipe to ensure there are no holidays present in the coating system.

B.2.9.4 Dynamic Response Spectroscopy (DRS) shall be used, in conjunction with Tensile Testing and Adhesion testing, to ensure the quality of the adhesion zones. The Adhesion zone must pass Sonomatic's adhesion zone QC criteria.

a. If an adhesion zone fails the DRS scan, tensile testing or adhesion testing then a second adjacent adhesion zone shall be installed at the Contractor's expense.

B.2.9.5 Final inspection and approval by Con Edison's Field Representative and Con Ed Engineering Representative shall be performed prior to backfilling the feeder lines.

B.2.10 PERSONNEL

B.2.10.1 All Contractor personnel shall have safety training in accordance with carbon fiber/epoxy OEM training manual and eHASP. The Contractor's Supervisors shall be directly responsible for ensuring that the project is carried out efficiently and in a highest quality manner and shall interface directly with the Con Edison Project Manager and Con Edison Field Representative as appropriate.

B.2.10.2 All Contractor personnel shall complete the mandatory epoxy/carbon fiber OEM training and certification prior to the commencement of any work related to the application of the carbon fiber system.

B.2.11 ADDITIONAL REQUIREMENTS

B.2.11.1 The Contractor shall maintain the work area in a neat and orderly condition at all times. Site cleanup shall be performed on a daily basis and as directed by the Con Edison Field Representative. Proper housekeeping is critical to the successful installation of the composite carbon fiber system. All hazardous materials and debris generated during construction shall

become the property of the Contractor, and legally disposed offsite at an approved Con Edison waste facility on a daily basis.

B.2.11.2 The Contractor shall provide temporary lighting and temporary electrical power, as follows:

a. Prior to the start of construction, the Contractor shall notify Con Edison's Field Representative of the temporary electric service required for the construction phase of the project, if available; else Contractor shall provide their own temporary electrical power.

b. The Contractor shall install temporary lighting as required to perform the work as specified in this contract. The light shall remain on for safety and security at all times if deemed necessary by the Con Edison Field Representative.

c. Cable, conduit and equipment for temporary light and power are the Contractor's responsibility. It is not included in any schedules, tables or materials lists.

d. When the work is completed, the Contractor shall remove all temporary light and power equipment and cable installed by him unless directed otherwise by the Con Edison Field Representative. The Contractor shall also remove all material, hardware, devices, etc. to the satisfaction of Con Edison.

e. Receptacles shall not be on the same circuit as lighting facilities. The Contractor shall use separate circuits, of the proper ratings required by the construction tool load.

f. All 120/208 VAC, 10, 15 and 20 ampere receptacle outlets and devices (which are used for construction purposes), shall be equipped with ground fault circuit interrupters (GFCI) for personnel protection. The GFCI shall be "Class A" rated to trip when the line current reaches 5 milliamps. The GFCI shall be Underwriter's Laboratory listed and approved.

g. All cable runs for the temporary light and power shall be provided with pigtail adaptors for small hand tools.

h. All temporary grounding of construction equipment in accordance with CE-ES-1027-05, "Temporary Grounding of Electrical Equipment" for the duration of this contract.

B.2.11.3 Contractor may if approved by Con Edison establish their field office and other necessary installations, such as storeroom, tool room, etc. on the job site only at locations designated by the Company Field Representative.

B.2.11.4 The General Contractor shall hire the Third-Party NACE Level III Inspector directly, not through any subcontractor associated with carbon fiber installation. The Third-Party NACE Level III Inspector shall report directly to Con Edison. The carbon fiber Contractor shall provide all data as required in this specification to the Third-Party NACE Level III Inspector.

B.2.11.5 The General Contractor shall provide all required civil work to excavate, sheet & shore and backfill the transmission piping trench.

B.2.11.6 The General Contractor shall provide all civil support during the installation of the composite system, which include dewatering, temporary pipe support relocation, street plating, traffic control and trench shoring modifications.

B.2.11.7 The General Contractor shall backfill the trench if the following requirements are completed:

a. DRS results, tensile results and adhesion pull off results are completed, and no repairs are required.

b. All visual inspections are completed and all defects repaired. Including composite application and top coat application.

c. Adhesion zones are painted red and locations are surveyed/GPS.

d. Coated area of the pipe has ACM labelling for coal tar (if applicable)

e. Survey areas in order to identify completed carbon fiber application.

B.2.12 MATERIALS ORDERS/DELIVERY

B.2.12.1 The Contractor shall notify Con Edison Field Representative within 2 weeks from the date of award of contract if there are problems on the availability of materials noted in this specification or indicated on any drawings.

B.2.12.2 The Contractor shall coordinate all equipment and material suppliers, by them and all subcontractors, to ensure they meet the requirements of this specification. The Contractor shall notify the specific subcontractors or suppliers of any approved changes to the structures, materials or equipment which could affect the installation or performance of the other subcontractor's structures, materials or equipment.

B.2.13 EXISTING CONDITIONS

B.2.13.1 The Contractor shall examine the work site thoroughly. If any conditions exist which are detrimental to the proper installation of the work, the

Contractor shall notify the Con Edison Field Representative, in writing, of the presence of said conditions. Starting of work will be regarded as acceptance of existing surfaces, pipe clearances, and trench conditions and any claims thereafter will be disregarded.

B.2.14 SAFETY

B.2.14.1 All work performed by the Contractor shall be in accordance with submitted and accepted site specific Environmental Health and Safety Plan (eHASP).

B.2.14.2 All persons working within Con Edison facility shall follow all appropriate safety rules.

B.2.14.3 In the performance of their work covered under this specification, the Contractor shall observe all applicable Federal, State and Local regulations pertaining to safety in the workplace.

B.2.14.4 Any and all precautions found in the current Manufacturer's Product Data Sheets and the Safety Data Sheets shall be strictly observed.

B.2.14.5 Procedures and recommendations as found in SSPC PA Guide 3 shall be strictly followed.

B.3 WORK TO BE PERFORMED BY OTHERS

B.3.1 Con Edison shall review and approve all testing and test results. A final inspection shall be performed by Con Edison's Field Representative and Engineering.

B.3.2 Con Edison shall provide, if approved by the proper agency, a laydown area for work related materials to be stored adjacent to the work site.

The Civil Contractor shall provide all required civil work to excavate, sheet & shore and backfill the transmission piping trench.

B.3.3 Visual inspection/testing, repairs and remediation to existing pipe coating between adhesion zones, as required, shall be performed by the Contractor's Con Edison approved asbestos abatement contractor. The Contractor's Con Edison approved asbestos abatement contractor shall abate the existing ACM coal tar or primer-less butyl rubber tape coating from the adhesion zones.

B.4 DELIVERY STORAGE AND HANDLING

B.4.1 The Contractor shall be responsible for ensuring delivery of all composite materials on site prior to start of the job.

B.4.2 Containers and packages of all material shall bear the manufacturer's printed label.

B.4.3 Composite reinforcement materials shall be delivered to the job site in the manufacturer's unopened, original containers bearing a legible product designation, batch number, and date of manufacture. Damaged containers shall be rejected and the material contained therein shall not be used.

B.4.4 All composite reinforcement materials shall be received and stored in a covered area at storage temperatures specified on the current Manufacturer's Product Data Sheet. Materials shall be protected from physical damage, moisture and extreme temperatures.

B.4.5 All composite reinforcement materials shall be stored and labeled using appropriate hazardous material classification system, as required by 29 CFR Part 1926.59.

B.4.6 Material found contaminated, expired, or otherwise nonconforming shall be disposed in accordance with Con Edison Field Representative concurrence.

B.4.7 If any flammable, solvent based material is to be stored, the storage area/cabinet shall be suitable for storage of flammable materials and comply with all applicable codes and regulations.

B.4.8 Materials to be used shall be within the stated shelf life throughout the duration of the job.

B.4.9 Storage of abrasives shall be adequate to protect the abrasive from moisture and other contaminants.

B.5 MATERIAL REQUIREMENTS

B.5.1 Unless otherwise approved by the Con Edison Engineer, use of materials other than materials listed below shall not be permitted.

B.5.1.1 Epoxy / Carbon Fiber Materials

FRP 120 HT (High Strength Epoxy Adhesive)

FRP Repair Putty (High Build Epoxy Repair Putty)

FRP 110 HT (High Strength Epoxy Adhesive)

FRP GF 300=BD (Glass Fabric (Bi-Directional))

FRP 210 HT (High Temperature Composite Saturating Resin)

FRP CF 500-BD (Carbon Fiber (Bi-Directional))

FRP HP 300 Epoxy (High Performance Epoxy Coating System)

B.5.2 Carbon fiber threads shall have a documented minimum tensile strength of 77 ksi and be manufactured in compliance with ISO 9001-2015 QA/QC Program.

B.5.3 Carbon fiber threads shall be woven into a bi-directional fabric with a 12K tow and 2 x 2 twill weave orientation. The overall weight of the fabric shall be at least 19.5 oz. per square yard.

B.5.4 The final composite system shall meet or exceed all the test parameters shown in Table 1 below. Testing shall be performed by an accredited, Third-Party laboratory. No internal testing manufacturers or applicators will be accepted. Curing of composite samples shall be done at 75°F maximum.

Table 1. Required Properties for Final, Cured Composite

Property	ASTM Test #	Minimum Value
Flexural Strength	D790-15	55,000 psi
Flexural Modulus	D790-15	4,300 ksi
Tensile Strength	D3039M-14	105,000 psi
Modulus	D3039M-14	6,250 ksi
Poisson's Ratio	D3039M-14	0.070
Lap Shear Strength	D3165-07	3,200 psi
Coefficient of Linear Thermal Expansion	E831-14	3.8 – 4.3 x 10^(-6) in/in °F
Barcol Hardness	D2583-13a	41
Heat Deflection Temperature	D648-16	425°F (264 psi stress)

B.5.5 All products applied underneath the composite wrap including polymeric repair putties and tack coats shall demonstrate >2,500 psi adhesion to blasted steel panels according to ASTM D4541.

B.6 MATERIAL LIST

B.6.1 Epoxy / Carbon Fiber Materials

B.6.1.1 Encapsulation Materials for ACM containing Coal Tar

a. Advanced FRP Systems Tack Coat 110 HT

B.6.1.2 Scratch Coat/Filler – High Build Epoxy Repair Putty

a. Advanced FRP Systems – FRP Repair Putty

B.6.1.3 High Strength Epoxy Adhesive

a. Advanced FRP System – FRP 120 HT

B.6.1.4 Glass Fabric

a. Advanced FRP System – FRP GF-300BD

B.6.1.5 High Temperature Composite Saturating Resin

a. Advanced FRP System – FRP Saturant 210 HT

B.6.1.6 Carbon Fiber (Bi-Directional)

a. Advanced FRP System – FRP CF-500 BD

B.6.1.7 High Performance Epoxy Coating System

a. Advanced FRP Systems – FRP HP 300 Epoxy

B.7 INSTALLATION IMPROVEMENT OPTIONS

B.7.1 Wet Lay-up Reduction in Layers

B.7.1.1 The current wet lay-up design includes eight (8) layers in the adhesion zone, and six (6) layers in the coated area. Con Edison Engineering is currently in the process of reducing the number of layers to improve the design and reduce the installation cost. The improvements will also reduce the overlaps required in order to reduce material costs. The QA/QC requirements will remain the same for the project. All testing will be performed in accordance with ASME-PPC-2, an addendum will be submitted with the design changes.

B.7.2 Encapsulation Sleeve Design

B.7.2.1 The new encapsulation design will be installed on straight lengths of pipe, barrels, and branch connections. The new design shall be installed over live feeder pipes with an exterior anticorrosion primer-less butyl rubber tape coating or green tape, exposed steel pipe surface, or coal tar coating. The encapsulation design shall create a secondary pressure boundary around the existing pipe to contain any leaks. The design shall include transition joints, termination ends, allowance for temporary pipe supports, and a repair process for any field defects. A quality control and quality assurance (QA/QC) process shall be developed to monitor product installation, with minimal material sampling, and adhesion testing as required. The encapsulation design shall provide a structurally independent pipe capable of withstanding 100% of the internal pressure, thermal growth, and of the transmission feeder system pressure. Since this area has been previously refurbished, the encapsulation system shall also serve to encapsulate the existing primer-less butyl rubber tape coating or green tape that is currently on the feeder pipes, and mitigate any corrosion issues.

C. Methods of Construction

C.1 TRAINING AND DEMONSTRATION

C.1.1 All personnel directly involved in the installation of composite materials shall be required to have an active certification as a certified applicator, issued by Con Edison or approved OEM/Vendor. Certification shall be based upon completion of a comprehensive training course, including both classroom and in the field training (See Appendix III).

C.1.2 All personnel involved with the work process shall be trained on the proper installation methods (in accordance with all Con Edison specifications) for coating, and all Environmental, Health and Safety requirements. Contractor personnel shall be knowledgeable in the installation of pipe clamps should a dielectric fluid leak occur during the Pipe Enhancement work activities. Only low profile clamps are permitted.

C.1.3 Any deviation from this Specification which results in a change to the designed operation of affected equipment shall be clearly defined and submitted in writing to the Con Edison Field Representative for Con Edison review and approval.

C.2 SEQUENCE AND SCHEDULING

C.2.1 The Contractor shall provide a detailed CPM Level III or Primavera P6 resource loaded schedule for the complete installation, including allotments for permitting, pipe enhancement work, including abatement, cleaning the pipe, coating and NDE inspection, and all the other pertinent milestones.

At a minimum, the schedule should include the following items:

a. Mobilization
b. Excavation
c. Abatement of primer-less butyl rubber tape, ACM Coal Tar/Coating Enclosing (as required)
d. Adhesion Zone Surface Preparation
e. Carbon Fiber Application
f. Inspection Intervals and Hold Points
g. Curing Period
h. NDE Assessment
i. Adhesion Zone DRS Testing
j. Delivery of Documentation and Reports
k. Backfilling
l. Final Site Restoration
m. Demobilization

C.2.2 The Contractor shall complete all pipe enhancement/refurbishment work in a timely fashion.

C.2.3 The Contractor shall be responsible to coordinate the actions/activities of their subcontractors' and suppliers with Con Edison Field Representative who will be designated by Con Edison.

C.2.4 The Contractor shall be responsible to coordinate any approved changes to the structures, materials, equipment and other items supplied by him and to him by Con Edison, which could affect the work or performance of the other subcontractors' structures, materials or equipment.

C.2.5 The work described in this construction specification shall be coordinate with the work to be performed by others. The Contractor shall schedule and accomplish its work such that it will cause no delay to proper installation and completion of work to be performed by others.

C.2.6 All communications of coordinating shall be routed through the Contractor's site Representative to the Con Edison Field Representative.

C.2.7 All requirements relating to the sequencing and scheduling of the work to be performed shall be in accordance with Con Edison's Construction Job Management Procedures, Standard Terms and Conditions for Construction Contracts, and the Special Site Conditions.

C.3 CONSTRUCTION

C.3.1 The Contractor shall notify Con Edison in writing within two (2) weeks of being awarded the contract if they will take exception to any aspect of this specification. Any deviation from the specification shall be approved by Con Edison Engineering prior to acceptance.

C.3.2 The Contractor shall notify Con Edison if any deviations from the work schedule come up prior to or during application.

D. Method of Measurement

The quantity to be measured for payment shall be the linear trench feet (T.F.) of composite carbon fiber system encapsulation of underground transmission feeders and return lines as shown in the contract drawings dated February 21, 2020 under Project ID: SANDRESM1 as directed by Con Edison in consultation with the Resident Engineer. Eight pipes within one linear trench foot)

E. Price to Cover

E.1 SUBMITTALS

E.1.1 The Contractor shall submit the following in the required quantity and format to Con Edison:

E.1.1.1 As part of the bid submittals, submit company overview and minimum five years of related project experience similar in scope and magnitude to the project covered by this specification.

E.1.1.2 Resumes of the key personnel, supervisors, and the superintendent who shall manage the field operations are to be submitted with the bid and shall have at least three (3) years of experience with carbon fiber or composite application work.

E.1.1.3 All required licenses are to be obtained by the Contractor listed in the bid package.

E.1.1.4 Contractor shall submit their training manual reflective of the carbon fiber application process and Appendix III for Con Edison review and approval.

E.1.1.5 A site-specific Environmental, Health and Safety Plan (eHASP) shall be submitted by the low bidder at the pre-award meeting. The eHASP shall address, at minimum, CEHSP A12.03 EH&S Qualifications for Supplier Procurement and Oversight, Con Edison EH&S-related requirements set forth in Section F, asbestos-related notifications and variances governing the work, Con Edison-approved disposal scenarios for all waste streams generated by Contractor activities, and the contents of this section. The eHASP shall be reviewed and accepted by Con Edison prior to the commencement of the work.

a. Spill Prevention and Response Plan (SPRP) (including provisions for response to any dielectric fluid leaks that occur during the Pipe Encapsulation work tasks) is to be included in the eHASP, in accordance with CEHSP E10.01 and GEHSI E02.01.

b. A Noise Mitigation Plan in accordance with DEP requirements

c. A Dewatering Plan

d. Working in confined spaces in accordance with CEHSP S16.00

e. Hazardous waste plan; grit blasting contaminants; dust collection

E.1.1.6 The Contractor shall comply with Con Edison QA/QC Manual and Inspection Test Plan (ITP), see Attached QA/QC Manual and ITP.

E.1.1.7 The Contractor shall submit a report listing each composite material used, its technical data sheet, wrapping application, carbon fiber specification, photos, ITP test results, QA/QC forms, and NDE analysis of the adhesion zone. SDS sheets are to be supplied for all materials installed or used during the project and remain on file throughout the project. SDS sheets must be approved for use prior to the start of the project per CEHSP S09.02.

E.1.1.8 Contractor shall submit a Third-Party lab report within seven (7) business days for all tensile testing performed in accordance with ASTM D-3039 for all daily composite tensile test panels. All results shall be submitted to Con Edison for review and approval prior to Contractor demobilization.

E.1.1.9 Contractor shall submit a QA/QC report and test results for all adhesion testing performed in accordance with ASTM D4541 Adhesion Strength (See Appendix V) for Con Edison review and approval prior to Contractor demobilization.

E.1.1.10 Where items/equipment are specified by exact make and model and the Contractor certifies in writing that these specific items shall be provided, samples and/or catalog cuts shall be required for submission. No variation or substitutions from the specified products shall be permitted unless approved by Con Edison Engineering.

E.1.1.11 The Contractor shall submit his dust collection plan to contain any dust and debris during surface preparation or Con Edison approval.

E.1.2 The Contractor shall submit all drawings, reports and information in accordance with Project Description in digital and hard copy formats. All As-Built drawings shall be made in AutoCAD 2013 or newer. All drawings shall include, but not be limited to, the following:

E.1.2.1 As-Built drawings (at least in AutoCAD 2013), showing an accurate location (in plan and profile) with reference to adjacent curb lines and cross streets, direction of the pipe, bends, any new welded repair barrels and patches, location of all adhesion zone areas, the exact location and depth of the existing manholes, and end-wall repair. Typical cross sections are to be indicated where the cross section changes along the run.

E.1.2.2 Contractor shall, on a daily basis, document job progress, personnel roles and responsibilities, carbon fiber saturation process, carbon fiber coating application, carbon fiber inspection, and required NDE testing for the project on all associated QA/QC Forms.

E.1.2.3 The final As-Built drawings must reflect all adhesion zone coated red, barrels, patch welds, high hats, design changes, facilities and services located near the feeder pipes in the trench in accordance with Engineering Operations Manual CE-0301.

E.1.2.4 Contractor shall submit a comprehensive project report and receive Con Edison approval prior to demobilizing any resources from the project site. The report shall include the following:

- Executive Summary (brief description about the project process, key attributes, and what was completed)

- Project Schedule (plan vs. actual), including any schedule impacts and their cause
- As-built drawings, showing adhesion zone locations or custom wraps
- QA/QC Reports
- Inspection reports with associated photos
- NACE Inspectors reports
- Third-Party Labs results, adhesion testing results, and Sonomatic DRS results
- RFIs and non-conformances reports
- Conclusion (Detail summary of the project, issues and root causes, productivity, and challenges)

E.1.3 Review and Approval of Submittals

E.1.3.1 All documents and materials required for the full completion of this project shall be submitted to, and subject to the approval of, Con Edison Representatives and Engineers.

E.1.3.2 Documents or materials that do not satisfy Con Edison standards and requirements of applicable codes and standards shall be replaced, rectified or corrected by the Contractor based on Con Edison comments without and additional compensation from Con Edison.

E.1.3.3 Approval of Contractor's submittals shall not relieve the Contractor of any responsibility arising from any future claims due to unforeseen non-compliance to Con Edison standards and requirements of applicable codes and standards.

E.2 SITE REPRESENTATIVE

E.2.1 Upon execution of the Contract, Con Edison shall identify in writing to the Contractor, a Con Edison Field Representative for the Project. The Con Edison Field Representative shall have full authority to act, or to cause others to act, on behalf of Con Edison, to assure that the work is carried out in full compliance with the requirements of the Contract, and to otherwise generally protect the interests of Con Edison. Con Edison may change the Representative at any time by notifying the Contractor, in writing, of the name of the new Con Edison Field Representative and the effective date of the change.

E.2.2 Prior to the start of construction, the Contractor shall submit the names and responsibilities of the Contractor's and any subcontractors' personnel, including the primary contact and key people that will directly interface with the Con Edison Representative and Engineers.

E.2.3 The Contractor may only proceed with the required work under the direction of the Con Edison Representative on a daily basis. The Contractor must be in close coordination with the Con Edison Representative to ensure that if System conditions change and permission to work is denied and/or modified that this information can be quickly communicated to the Contractor field supervision and crews.

E.2.4 All Contractor employees for the project must be trained and certified by the approved composite supplier (OEM) to install all composite material. For this project the approved composite supplier is Advanced FRP Systems, Inc.

E.2.5 A certified representative from the OEM, Advanced FRP Systems, Inc., shall be present onsite during the entirety of the project to verify the installation of the composite reinforcement system and ensure that the material is applied in accordance to the composite supplier's recommendations and the entirety of this specification.

E.2.6 No work may proceed without the presence of a Third-Party NACE Level III Inspector, Contractor QA/QC Manager, a Certified OEM Representative, and a Company Representative.

E.3 QUALITY ASSURANCE

E.3.1 The Contractor shall use trained and qualified/certified personnel to install the carbon fiber system, in accordance with Appendix III requirements and this Specification.

E.3.2 The Contractor shall provide daily supervision, QA/QC personnel, and proper equipment to complete the scope of work listed in this Specification.

E.3.3 The Contractor shall provide documentation of all personnel that may be required or requested by Con Edison for the full completion of the project. The Contractor(s) performing work on the pipe-type transmission system facilities must be qualified by the composite OEM supplier and approved by Con Edison. Documentation of Contractor qualifications must be submitted for approval prior to start of work.

E.3.4 A Third-Party Quality Control (QC) Inspector shall be present for the duration of the project. The Third-Party NACE Level III Inspector shall be fully trained by the OEM on Carbon Fiber application and shall review the QA/QC manual, QA/QC forms, and ITP before the commencement of work. The NACE Level III Inspector shall have a National Association of Corrosion Engineers (NACE) CIP Level III (3) certification, with a minimum of five (5) years field experience. The NACE Inspector in conjunction with the Contractor's QA/QC Manger shall complete and submit a weekly QC report, which include total LF installed, RFI's and non-conformance reports, inspections performed, and NDE results to date to Con Edison throughout the project.

The Third-Party QC Requirements and responsibilities are laid out in detail in Section B.2.8 of this Specification.

E.3.5 During each shift that includes the direct installation of carbon fiber, one (1) 12" x 12" two (2) layer sample of carbon fiber will be produced by the Contractor for tensile testing according to ASTM D3039. The Third-Party NACE Level III Inspector shall witness daily sample preparation and sign off on appropriate QA/QC forms for tensile test.

E.3.6 During each shift that includes grit blasting for the adhesion zone one adhesion test panel will be produced. The panel will have the following layout, 12" x 12" grit blasted ¼" steel plate with NACE 2/SSPC-SP-10 "Near White Metal Blast Finish" with a 3 mil minimum angular profile coated with 10-15 mils of Epoxy adhesive, one (1) 12" x 12" single layer of saturated e-glass. Additionally, one (1) 12" x 12" single layer of saturated carbon fiber shall be placed over the e-glass, and one (1) 6" x 12" single layer of saturated carbon fiber shall be placed on half of the plate for adhesion testing. A minimum of eight (8) adhesion test dollies shall be adhered to the plate immediately following sample preparation. OEM training shall include details of Adhesion test plate preparation.

E.3.7 The Third-Party NACE Level III Inspector, in conjunction with the QA/QC manager shall be required to collect the following data for each Tensile Strength and Adhesion test sample:

E.3.7.1 Batch number of the Saturant, Adhesive, Fiberglass and Carbon Fiber

E.3.7.2 Temperature, humidity, dew point, spread, in the associated work areas

E.3.7.3 Date of the application

E.3.7.4 Locations on the feeders and return lines installed the day of sample preparation

E.3.7.5 List of application team members involved in the preparation of the test sample

E.3.8 The Contractor shall comply with Con Edison's QA/QC Manual and quality control Inspection Test Protocol (ITP) and shall impost the same requirements on all Sub-Contractors and Suppliers. The plan shall be implemented and monitored by the Contractor's QA/QC Manager. The Company will review the Contractor's quality control activity. See QA/QC Forms and ITP.

E.3.9 The Contractor shall afford the Third-Party NACE Level III Inspector and OEM oversight representative full cooperation and access to the installation, inspections and QA/QC testing being performed. They shall be able to make material examinations, check for specification compliance, and review history of all materials during construction, and witness performance of any testing.

E.3.10 Test equipment used shall be calibrated to a known standard traceable to the National Institute of Standards and Technology (NIST) or as required for compliance with ISO 17025.

E.3.11 The Contractor's Non Destructive Examination (NDE) program shall be approved by Con Edison's Engineer. NDE technician used shall be certified in accordance with ASNT-CP-189 and ASNT-SNT-TC-1A requirements.

E.3.12 Regulatory and Permit Requirements

E.3.12.1 Con Edison will submit/obtain all required asbestos-related notifications and variances and other permits (as required by New York City/State Regulations and its Agencies) and share them with Contractor.

E.3.12.2 The Contractor shall comply with all applicable Federal, State, City and OSHA rules and regulations. All violations arising from noncompliance are the responsibility of the Contractor and shall be promptly rectified by them at their expense.

E.3.13 Guarantees

E.3.13.1 Contractor shall guarantee the epoxy and carbon fiber material installation and workmanship is in compliance with ASME PCC-2, and Table 1 Repair System Required Material and Performance Properties, resulting in a secondary pressure boundary, which provides an environmentally safe and dependable system.

E.3.13.2 The Contractor shall replace, free of charge, any part of the system, which proves defective or in any way fails to meet the specified requirements, because of poor workmanship, failed Dynamic Response Scan, tensile or adhesion testing failure, or defective materials.

E.3.14 Quality of Work

E.3.14.1 Any work performed by Contractor found to be nonconforming to the requirements of this specification or defective shall be redone at no additional cost to Con Edison.

E.3.14.2 Preparation of all test samples must be completed with the same procedures and care utilized for application of the composite material on the actual feeder pipes and oil return lines to ensure the samples are fully representative of the quality of work being performed.

E.3.14.3 Any workmanship deemed by Con Edison as being inferior, unsuitable, or not conforming to requirements of this specification shall be redone with no additional costs to Con Edison.

E.3.15 Carbon Fiber

E.3.15.1 Manufacturers of carbon fiber to be used by the Contractor shall be subject to the requirements of CE-PS-4302, Quality Assurance Requirements for Level C Vendors and have a quality system that meets the requirements of ISO 9001 (2015).

E.3.16 Non Destructive Examination

E.3.16.1 All NDE inspectors performing visual inspection, UT thickness testing, or other NDE shall be at a minimum certified to ASNT Level II.

E.4 PROPOSAL

E.4.1 The Contractor's proposal shall include all items and information requested in the Purchasing Department's Invitation to Bid Documents and as stipulated in Con Edison Standard Terms and Conditions for Construction Contracts.

E.4.2 Any statement in the Contractor's proposal that differs from the requirements of this specification shall be referred to in a section entitled "Statement of Exceptions." The Contractor shall state the section and paragraph of the specification he is taking exception to. If the proposal contains exceptions that are not included in the "Statement of Exceptions" the conditions of this specification shall prevail.

E.4.3 Any request for substitutions or modifications from the product requirements listed herein shall be submitted to and approved by Con Edison. For any product change, data/information must be provided demonstrating that the proposed alternate system can meet all product requirements herein.

Requests for alternative systems must be submitted with the proposal to provide sufficient time for review.

E.4.4 The Contractor shall present its proposed technical approach to install carbon fiber systems, including lists of expected skills, expected number of personnel required, expected equipment required, and foreseen changes required to complete the project successfully, as proposed.

E.5 OWNER ACCEPTANCE

E.5.1 Final acceptance of the Contractor's work shall be contingent upon an inspection performed by the Third-Party NACE Level III Inspector and a member of Con Edison's Engineering support team, in conjunction with any other requirements of the contract.

E.5.2 Acceptance of Con Edison's purchase order or the making of a contract shall be construed as evidence that an examination of the project was made and later claims for labor, equipment or materials required shall not be allowed.

E.5.3. The analysis and results of all required destructive and non-destructive testing including the Dynamic Response Spectroscopy (DRS) inspection of the Adhesion Zones, Tensile test results, adhesion test results, hardness test results and visual inspection shall be used to assess the carbon fiber work performed by the Contractor. Acceptance criteria shall be based on the adhesion bond between the carbon fiber and steel. (See Appendix II).

E.5.4 Written acceptance of the work after final inspection does not release the Contractor from workmanship liabilities as referenced in the Quality Assurance section.

E.6 REQUIRED SUBMITTALS

E.6.1 The Contractor shall obtain the required Notice to Proceed from the Con Edison Construction Manager.

E.6.2 Contractor shall submit to Con Edison all applicable QA/QC Forms by next business day.

E.6.3 Contractor shall submit to Con Edison all material test results within seven (7) business days, and prior to demobilization from the site.

E.6.4 Prior to the start of work, the Contractor shall submit a detailed work plan and schedule to the Con Edison Field Representative for review and approval. The schedule shall identify each specific task requiring down time of any existing system, along with the start and end times of each task. The Notice to Proceed shall be contingent upon approval of Contractor's work plan and schedule by the Con Edison Field Representative. Con Edison reserves the right to change the schedule.

E.6.5 Where the material is specified by manufacturer, the Contractor shall certify in writing that these specific items shall be provided. No variation or substitutions from the specified products will be permitted.

E.6.6 When field changes are required, the Contractor shall keep a complete record of all such changes being made by his/her field forces on the Contractor's copy of the affected subsurface drawings. At the completion of the work, the Contractor shall prepare and submit the As-Built drawings in AutoCAD 13 format to the Con Edison Representative, who will forward them to the Con Edison Engineer in order that the original tracing be revised.

E.7 ADJUSTMENT OF PIPES TO PERFORM INSTALLATION

E.7.1 The price shall cover the cost to adjust transmission utilities, inclusive of oil-o-static pipes, return lines, freeze lines and communication lines in order to install the carbon fiber composite.

E.7.2 Refer to JB 402B for price to cover final position of oil-o-static pipes, freeze lines and return lines.

The price shall cover any costs incurred if the integrity of the field coating is compromised on the oil-o-static and/or return lines' due to adjustment/movement and/or support of transmission lines to final position, per Con Edison guidelines, payment for additional inspection/testing, excavation, repair, remediation and field coating shall be covered and paid for under this item.

E.7.3 Refer to JB 402 for price to cover final position of communication lines.

E.8 FIELD COATING OF OIL-O-STATIC FEEDER PIPES AS REQUIRED

E.8.1 The price shall cover any costs incurred for the Contractor to coordinate with Con Edison forces and the Contractor's Con Edison approved asbestos abatement contractor to perform the visual inspection of exposed oil-o-static and return lines and additional excavation that may be required to perform testing if the existing field coating appears to lack integrity and to repair and remediate the coating between adhesion zones, as required; modification of work methods and/or construction sequencing, any impact with maintenance and protection of traffic, and loss of productivity.

E.8.2 The price shall cover any costs incurred if the integrity of the field coating is compromised on the oil-o-static and/or return lines' due to adjustment/movement and/or support of transmission lines per Con Edison guidelines, all costs associated with additional inspection/testing and excavation performed to repair and remediate the coating between adhesion zones and any and all delays shall be covered and paid for under this item; modification of work methods and/or construction sequencing, any impact with maintenance and protection of traffic, and loss of productivity.

E.8.3 The price shall cover any costs incurred if any damage to the oil-o-static and/or return lines' field coating is caused by the Contractor, all costs associated with additional inspection/testing and excavation performed to repair and remediate the coating between adhesion zones and any and all delays incurred (inclusive of modification and/or construction sequencing, any impact with maintenance and protection of traffic, and loss of productivity) shall be at the Contractor's expense.

E.9 ABATEMENT OF EXSTING ACM COAL TAR COATING FROM ADHESION ZONES

E.9.1 The Contractor's Con Edison approved asbestos abatement contractor shall abate the existing ACM coal tar or primer-less butyl rubber tape coating from the adhesion zones.

F. References

F.1 APPLICABLE STANDARDS AND REFERENCES

F.1.1 All work, materials and equipment under this specification shall conform to the requirements of the latest applicable portions of the following codes and standards. All violations arising from non-compliance of applicable standards and references are the responsibility of the Contractor and shall be promptly rectified.

F.1.1.1 New York State Department of Labor Industrial Code, Rule 23, Protection of Persons Employed in Construction and Demolition work

F.1.1.2 U.S. Department of Labor, Occupational Safety and Health Administration (OSHA) Standards

F.1.1.3 The Air Pollution Control Code of the City of New York

F.1.1.4 Underwriter's Laboratory (UL)

F.1.1.5 American Society of Mechanical Engineers (ASME) PCC-2 2015, Repair of Pressure Equipment and Piping

F.1.1.6 American Society of Testing Materials (ASTM)

F.1.1.7 American National Standards Institute (ANSI)

F.1.1.8 National Electric Safety Code (NESC)

F.1.1.9 National Fire Protection Association (NFPA)

- NFPA-70, National Electric Code (NEC), Latest Edition
- NFPA 241-Safeguarding Construction, Alteration and Demolition Operations, Latest Edition

F.1.1.10 The Coatings Society (SSPC)

F.1.1.11 National Electric Safety Code (NESC)

F.1.1.12 National Fire Protection Association (NFPA)

F.1.1.13 American Concrete Institute (ACI) Standards

F.1.1.14	New York City Building Code, Latest Edition
F.1.1.15	New York City Department of Buildings Technical Policy and Procedure Notice #10/88, "Procedures for the avoidance of Damage to Historic Structures"
F.1.1.16	American Institute of Steel Construction (AISC), Latest Edition
F.1.1.17	State of New York Department of Public Service NYCRR 16 Part 753, "Protection of Underground Facilities"
F.1.1.18	State of New York Department of Public Service, 16 NYCRR Part 101, Underground Electric Facility Construction
F.1.1.19	American Welding Society (AWS), D1.1, Structural Welding Code, Latest Edition
F.1.1.20	40 CFR 100 to 179 – DOT Hazardous Material Transport Manifest System Requirements
F.1.1.21	40 CFR 260 to 272 – Hazardous Waste Management (RCRA)
F.1.1.22	6 NYCRR Parts 360, 264, 370, 371, 372, 373, 374, 376 – Waste Management Regulations
F.1.1.23	1 RCNY 15 – Asbestos Control Program Asbestos Rules and Regulations
F.1.1.24	12 NYCRR Part 56 – Asbestos
F.1.1.25	40 CFR Part 61 Subpart M – National Emission Standard for Asbestos
F.1.1.26	Clean Water Act (CWA), 33 USC 1321; 33 CFR 153.203; 40 CFR 110.6; Comprehensive Environmental Response, Compensation, and Liability Act (CERCLA), 42 USC 9603; 40 CFR 302.6
F.1.1.27	New York Nav. Law 175; 17 NYCRR Part 32; New York Environmental Conservation Law 17-1743; 6 NYCRR 613.8; New York Environmental Conservation Law 40-0111; 6 NYCRR 595.3
F.1.1.28	15 RCNY 11-03; 14 RCNY 19-03
F.1.1.29	International Organization for Standards (ISO) 17025 and 9001
F.1.1.30	American Society of Testing and Materials (ASTM)
F.1.1.31	The American Society for Nondestructive Testing (ASNT)

F.1.1.32 See Supplemental Specifications in Section F.3 for the additional Company regulations, codes and standards that are applicable to the scope of work covered in this specification

F.1.2 All violations arising from non-compliance of applicable standards and references are the responsibility of the Contractor and shall be promptly rectified.

F.2 CONTRACT DRAWINGS AND SUPPLEMENTAL SPECIFICATIONS

F.2.1 All specifications attached or referenced herein are the latest revisions as of the date of issuance of this specification. Any new revisions dealing with composite carbon fiber encapsulation shall be furnished as an addendum to this specification. All work shall be performed in accordance with the latest edition of the following specifications.

F.2.1.1	General Instructions Governing Work on System Electrical Equipment	
F.2.1.2	CEHSP S13.00 Excavation and Trenching	
F.2.1.3	CE-ES-1027	Temporary Grounding of Construction Equipment
F.2.1.4	CE-ES-3020 Structures	Specification for the Grounding of Equipment and
F.2.1.5	CE-TI-3356	Specification for Welding and Inspection of Repairs on Pressurized 69 kV, 138 kV and 345 kV High Pressure Pipe Type Feeders
F.2.1.6	CEHSP A26.00	Close Call Procedure
F.2.1.7	CE-PS-4302	Quality Assurance Requirements for Level C Vendors
F.2.1.8	CE-0301	Engineering and Construction Projects
F.2.1.9	CEHSP A28.00	Calling a Time Out CEHSP A32.00 Rules We Live By
F.2.1.10	CEHSP A12.03	EH&S Qualifications for Supplier Procurement and Oversight
F.2.1.11	CEHSP E08.02	Noise Construction and Utility Activities
F.2.1.12	CEHSP E10.01	Release Reporting
F.2.1.13	CEHSP S09.02	Evaluation and Selection of New Chemical Products

F.2.1.14	CEHSP S16.00	Permit-Required Confined Space Program
F.2.1.15	CEHSP S17.01	Electrical Enclosed Spaces
F.2.1.16	CEHSP S31.06	General Safeguards and Maintenance of Sites
F.2.1.17	GEHSI E02.01	Spill Reporting
F.2.1.18	GEHSI E05.10	Management of Excavated Soils on Company Property
F.2.1.19	GEHSI E05.11	Management of Excavated Soils on Property Not Owned by Con Edison
F.2.1.20	GEHSI E13.04	Work Site Restoration Practices
F.2.1.21	GEHSI E14.01	Noise Control
F.2.1.22	GEHSI S24.07	Job Briefings

F.2.3 In some instances, the reference documents provide general direction with specific modification and supplements provided by this specification. In case of a conflict in technical requirements with any reference document, the requirements covered in this specification and associated contract drawings shall prevail.

APPENDICES

1. Appendix I – Vendor Qualification
2. Appendix II – Carbon Fiber NDE Assessment (Sonomatic)
3. Appendix III – Personnel Training & Qualification
4. Appendix IV – Repairs
5. Appendix V – NCR Repairs
6. Appendix VI – Adhesion Pull Off Testing Procedure

APPENDIX I - VENDOR QUALIFICATION

1.0 PROJECT DESCRIPTION

1.1 The current repair work scope includes trenching (predominantly in a street environment), soil stabilization, manual soil excavation to expose the pipe, removal of original coal tar coating, and pipe surface preparation for nondestructive (NDE) inspection. Often times the NDE inspection results in extreme pipe wall thickness loss, which requires the installation of larger diameter pipes or barrels to be welded over sections of heavily corroded pipe. The new barrel and any exposed pipe are wrapped with new protective anti-corrosion tape coating (Fig 1).

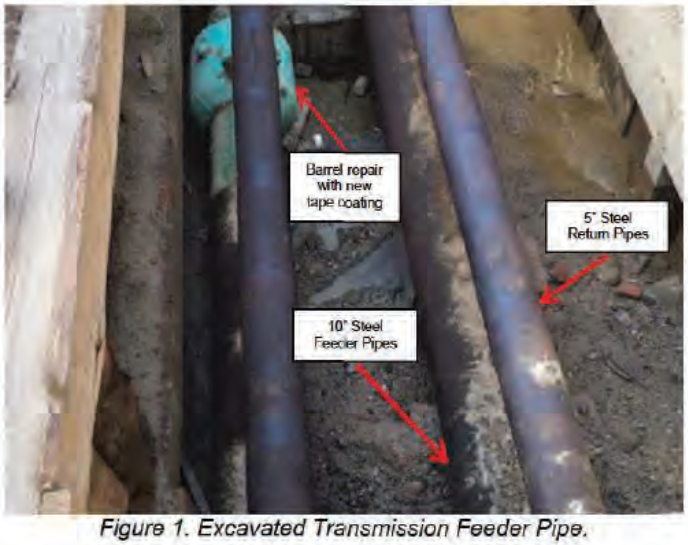

Figure 1. Excavated Transmission Feeder Pipe.

2.0 PROJECT DESCRIPTION

2.1 In the repair phase, rather than remove all the existing tape coating, the concept allows for its encapsulation, while repairing/preventing leaks and re-establishing the original design basis of the corroded or defective area of steel pipe. This can be achieved with the installation of an epoxy coating applied over the tape coat, then carbon fiber circumferential wrap impregnated with epoxy resins over the epoxy coating.

3.0 CERTIFICATION PROCESS

3.1 Listed below are the instructions to prepare the simulated pipe samples for carbon fiber wrapping and hydrostatic testing. The carbon fiber application process has to be witnessed by Company or an approved OEM for vendor certification. The proposed instructions can be modified and submitted for Company review and approval. Video recording, photos, and NDE results are incorporated into a technical report prepared by an approved Third-Party certified testing lab or equal, which is required for verification of the application

process. All certification steps are at the expense of the Contractor, except the sample test pipes.

3.2 Preparation of Test Pipe

3.2.1 Company shall provide two 10" diameter pipe samples for testing, one with bitumastic coal tar, and the other with green tape coating, both pipes are to be wrapped with composite system.

3.2.2 Qualified NACE Level III Inspector, composite OEM representative and, Company representative must be present during installation to ensure the quality of the carbon fiber application.

3.2.3 Prepare the three feet adhesive zone surface by abrasive blasting in accordance with surface preparation standard NACE 2/SSPC-SP-10, "Near White Metal Blast Cleaning, with a minimum 3 mil angular profile. All grit blast areas shall be protected from corrosion (See Fig 2).

3.2.4 If the pipe is coated with Coal Tar, apply a 30 - 40 mils layer of FRP 110 HT epoxy coating over the coal tar mastic coating, extending approximately ½ inch onto the metal surface on each end. Allow FRP 110 HT to dry to the touch prior to next step

3.2.5 Apply the FRP 120 HT – high strength adhesive to the entire pipe at 5 – 10 mils DFT via brush/roller.

3.2.6 Apply one circumferential band of GF 300-BD glass fabric saturated with the FRP 210 HT saturating resin extending 2 inches beyond both ends of the adhesion zone with a six inch circumferential overlap.

3.2.7 Saturate CF-500 BD, a bi-directional carbon fiber, with the FRP 210 HT Saturating resin.

3.2.8 Apply 6 layers of CF-500 BD as shown by OEM in the mandatory training session. Carbon fiber will be applied in 3 double layers, exactly the same as described in this specification.

3.2.9 Apply carbon fiber in a circumferential technique, with a minimum overlap of 6" inches on all joints.

3.2.10 Seams between layers should be offset by starting the second double layer with a 12" wide band of CF-500 BD.

3.2.11 Apply an additional two layers of carbon fiber covering a length of 40 inches, which includes the 3-ft adhesion zone and 4 inches onto the bulk of pipe.

3.2.12 Apply at least one (1) layer of topcoat of epoxy at 15 to 20 mils thick to the exterior surface of the 6 and 8 layers of carbon fiber.

3.2.13 Remove all sharp edges and rough surfaces from the final surface finish.

3.2.14 Pressure test pipe in accordance with Appendix I, Section 4.0

3.2.15 The adhesion zone of the pipe shall be scanned by Sonomatic to assess for any subsurface deficiencies or disbonding after pressure testing.

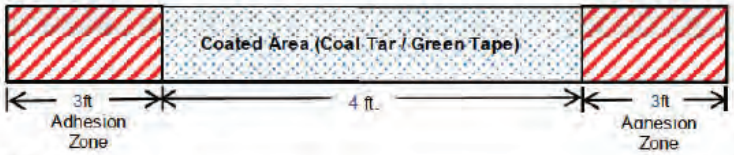

Figure 2. Pipe layout.

4.0 TESTING PROCESS

4.1 Fill Pipe #1 with city water, vent all air.

4.2 Hydrostatically test pipe in increments of 50 psi to 250 psig, hold for 60 minutes, then increase to 500 psi, hold for 10 minutes, and then 1000 psig for 3 minutes. No leaks must be visible.

4.3 Pipe #2 shall be shipped to Sonomatic for pre and post hydrostatic DRS scanning.

4.4 Hydrostatically test Pipe #2 in increments of 50 psi to 250 psig, hold for 60 minutes, then increase to 500 psi, hold for 10 minutes, and then 1000 psig for 3 minutes. No leaks must be visible.

4.5 Sonomatic/NDE Vendor to scan Pipe #2 adhesion zone section for defect/s.

4.6 NDE vendor to visually inspect Pipe #1 & #2 carbon fiber wrap for any application or material defect.

5.0 PIPE SAMPLES

5.1 One sample 10-ft in length, 10" diameter, a 4-ft band of bitumastic coal tar coating center of the pipe, with 3-ft adhesion zones on either side of the 4ft band.

5.2 One sample 10-ft in length, 10" diameter, a 4-ft band of green tape center of the pipe, with 3-ft adhesion zones on either side of the 4ft band.

5.3 The two pipe samples, one with bitumastic coal tar coating, and one with green tape coating will be shipped to the Vendor's address (See below, Visual References).

6.0 VISUAL REFERENCES



Figure 3. Bitumastic coated (left) and green tape (right) pipe samples.

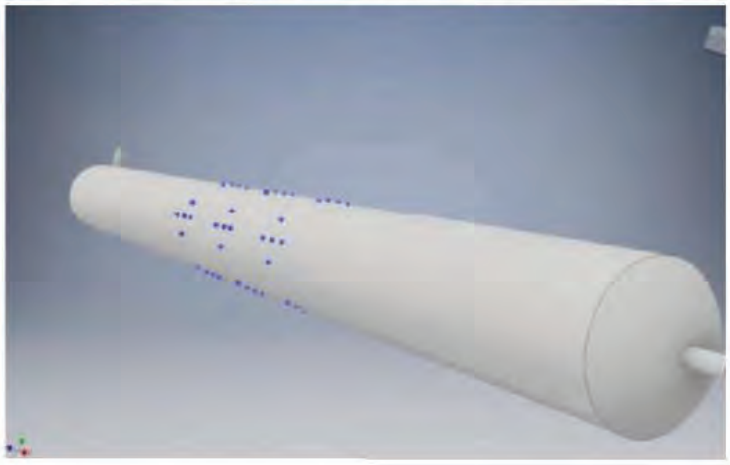

Figure 4. Cluster arrangement design for simulating through-wall pipe simulated defects.

APPENDIX II – Carbon Fiber NDE Assessment (Sonomatic®)

1.0 BACKGROUND

Dynamic Response Spectroscopy (DRS) was developed by Sonomatic® to address the issue of ultrasonic attenuation in coatings. It utilizes low frequency ultrasound to penetrate coatings and induce the steel to vibrate at its natural frequencies. Advanced signal processing algorithms are used to extract these frequencies and convert them into wall thickness (WT) measurements. DRS can also be used to identify areas of coating disbondment through loss of signal from the steel, see Figure 1.

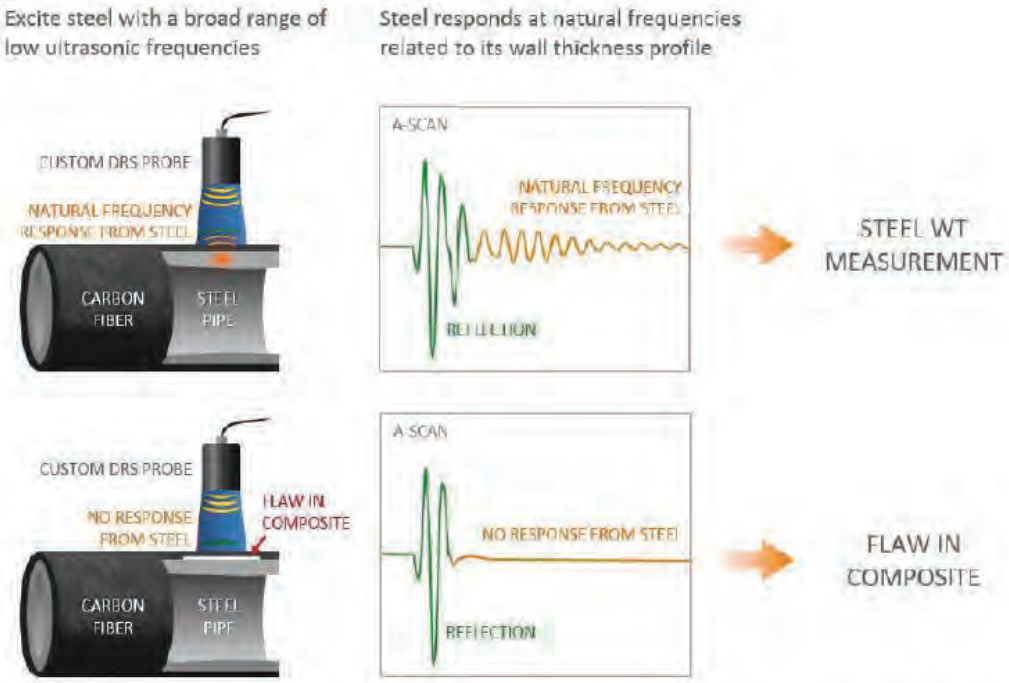

Figure 1. *Steel response relies upon transmission of ultrasound through the composite and bond line. DRS Technique Overview (Sonomatic®)*

2.0 TEST RESULTS

DRS maps are used to evaluate the adhesion quality of the carbon fiber reinforcement. Where it is well bonded, DRS signals are transmitted into the steel. Flaws in the composite, such as

disbondment at the steel interface, delamination between the layers and contamination, result in poor signal transmission.

The map in Figure 2 shows the result of a typical DRS QA check. It displays in green where the carbon fiber is well adhered to the steel. White pixels show where the DRS signals were not transmitted through the reinforcement, indicating flaws. Black shows flaw pixels for which there may be interaction with the disbondment assumed to exist at the right-hand edge of the map.

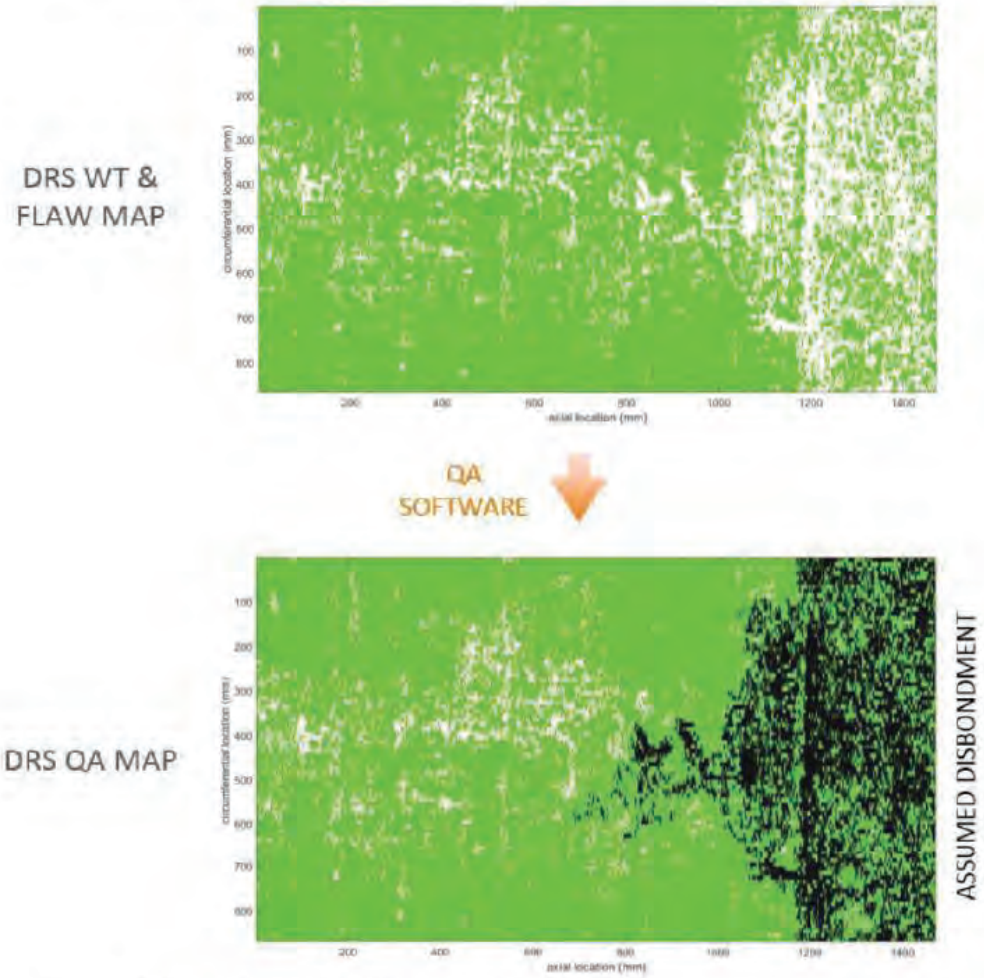

Figure 2. *QA Test: Pass (Sonomatic®)*

3.0 FAILURE IDENTIFICATION

Sonomatic® tested various samples. Test results determined that DRS is capable of detecting defects in the carbon fiber wrap. However, it is limited to scanning areas that do not have a layer of coal tar. Based on testing performed using the DRS different samples had different results. Overall, DRS was capable of detecting flaws within the carbon fiber reinforcement, see Figure 3.

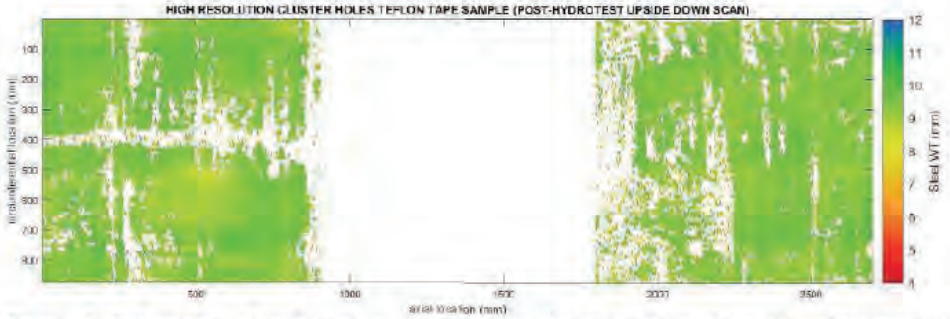

Figure 3. *Failure path shown at six o'clock position on the left side of the pipe. (Sonomatic®)*

4.0 ACCEPTANCE CRITERIA

DRS identifies flaws in the composite reinforcement but cannot distinguish interlaminar flaws from those at the steel interface. Therefore, a conservative approach is taken which assumes all flaws found in the adhesion zone are of the type most detrimental to the integrity of the reinforcement, i.e. steel disbondment. In order for a flaw to influence the load carrying capacity it must interact with the disbonded zone and/or other flaws that interact with the disbonded zone. Finite element modelling was used to establish the distance over which interaction occurs, this being approximately 25 mm. The QA software considers the location of flaws to identify those which 'interact' with the disbonded zone. All flaws within 25 mm of the 'interacting flaws' are then also designated as interacting. If a path of interacting flaws extends across the entire length of the adhesion zone, the QA test is failed. Otherwise, the adhesion zone passes the QA test.

APPENDIX III – PERSONNEL TRAINING & QUALIFICATON

1.0 REQUIREMENTS

Every person on the jobsite that is taking part in carbon fiber encapsulation is expected to participate in the OEM Training session described below.

1.1 Classroom/Presentation Training

- Tutorial Presentation on the carbon fiber process
- Safety (including appropriate PPE)
- Introduction to carbon fiber wrap technology
- Information about working at/for Company
- Project overview
- Introduction to the epoxy/carbon fiber materials
- Application of carbon fiber
- Course review

1.2 Hands-On Training/Qualification Testing

- Review of the application process
- Review of coating specification procedures
- Hands-on experience saturating the carbon fiber
- Hands-on experience wrapping a 5-inch and 10-inch sample pipe with low clearance between 3 – 6 inches
- Hands-on experience wrapping at a temporary pipe support repair location.

1.3 Repair Training Process

- Temporary pipe support repair
- Air bubble repair
- Welded barrel repair

1.4 Written Test

- Project Safety Requirements
- Tests their understanding of the materials
- Tests their understanding of the application process
- Tests their understanding of Transmission Feeder Pipes

1.5 Qualification Testing

- Company to provide 6" diameter x 3ft long test pipes in accordance Section II, subsection 2.5 and Figure 1.
- Wrap 1 ft center section of pipe with 4" wide TR Green tape
- Candidate to wrap 6" diameter test pipe provided by Company, see Figure 1.
- Each test pipe shall be labeled with company info, individual data, date of wrap, and test location.
- Each test pipe shall cure for a minimum of 48 hours, prior to testing.
- Each test pipe shall be pressure tested to 250 psig for no less than 60 minutes.

- After successful completion of the 250 psig test, the pressure shall be increased by 50 psig increments to 500 psig, held for 15 minutes, to certify the carbon fiber application process.
- Pressure test failure of the 6-in diameter test pipe restricts the group from applying the carbon fiber. The individuals can only mix, saturate, and transport the carbon fiber materials

1.6 Certification

1.6.1 The training and testing organization shall issue a certificate to individuals who have successfully completed the training and examination that includes the following information:

- Name of organization
- Description of the certification process.
- Name of individual successfully completing the training and examination
- Date of certification issuance
- Date of certification expiration

1.6.2 The training and testing organization shall maintain a record of personnel certificates.

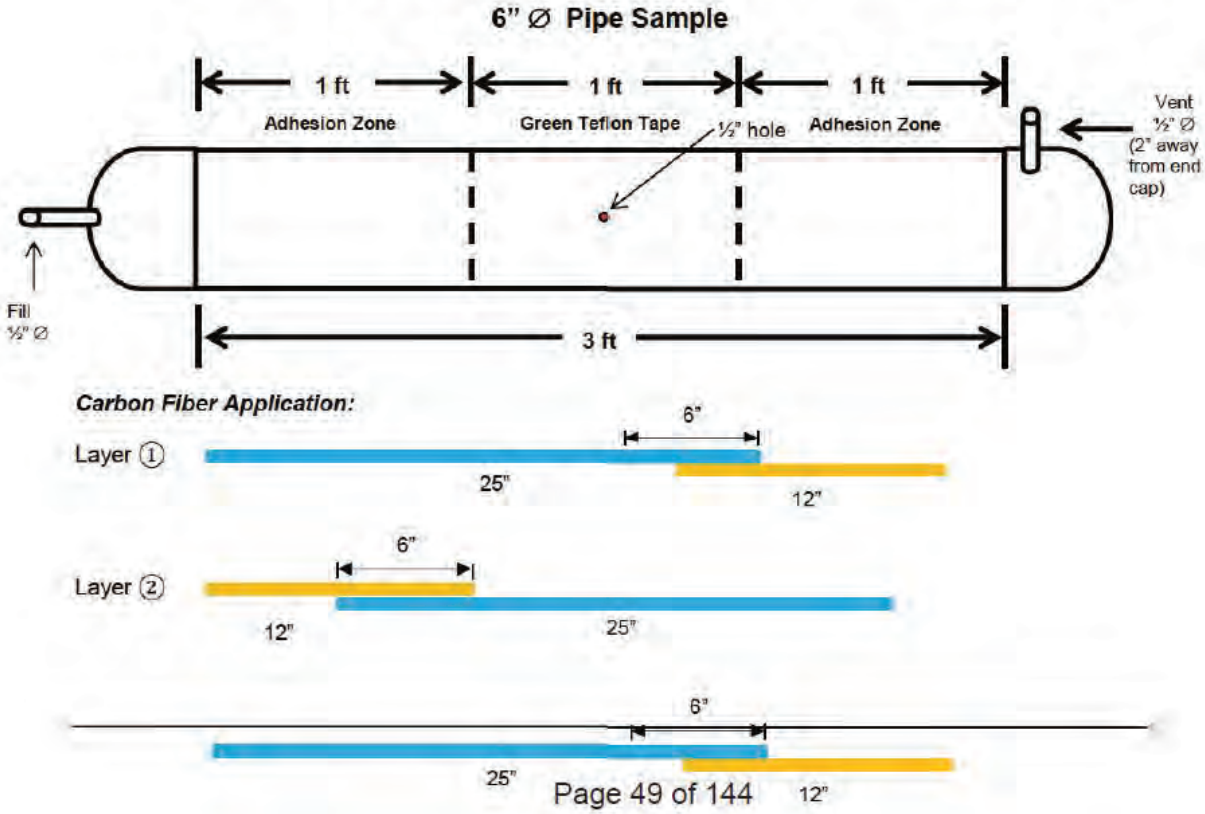

Layer ③

***Figure 1** - Sample test pipe for candidate certification.*

APPENDIX IV – REPAIRS

1.0 SECTIONAL REPAIR

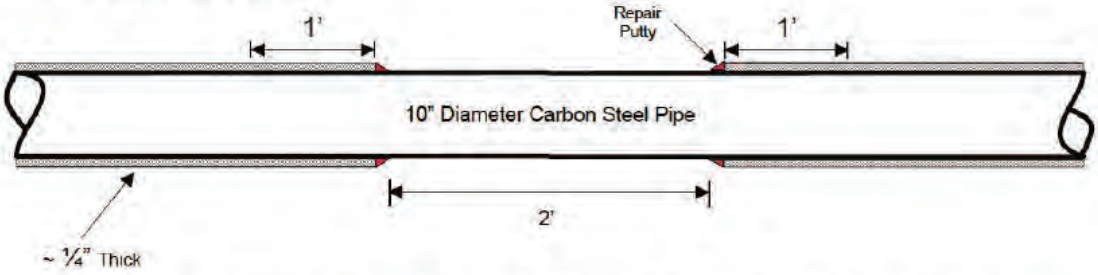

1. After the removal of existing carbon fiber material to expose pipe surface, grit blast exposed pipe surface and 1ft on either of expose pipe to Section II, subsection 2.5.
2. Use High Build Epoxy Repair Putty to create a transition zone between the carbon fiber wall and the pipe surface. Verify repair putty is cured, prior to the application of carbon fiber.
3. Apply a coating of High Strength Epoxy Adhesive # 2 at 5-10 mils with a roller.
4. Apply 3 double layers of carbon fiber, starting with Double Layer 1, and see below.

First Double Layer ①

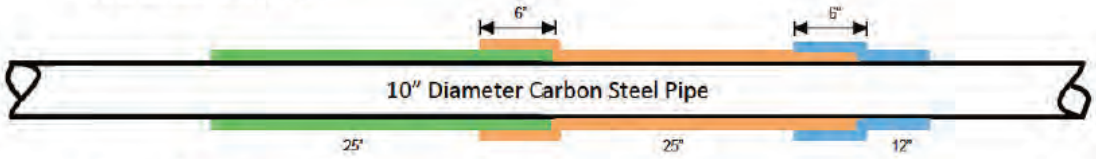

Second Double Layer ②

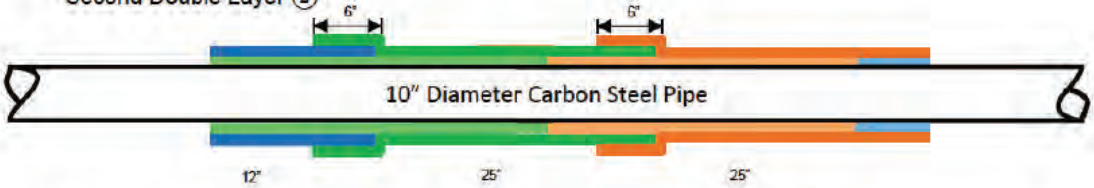

Third Double Layer ③

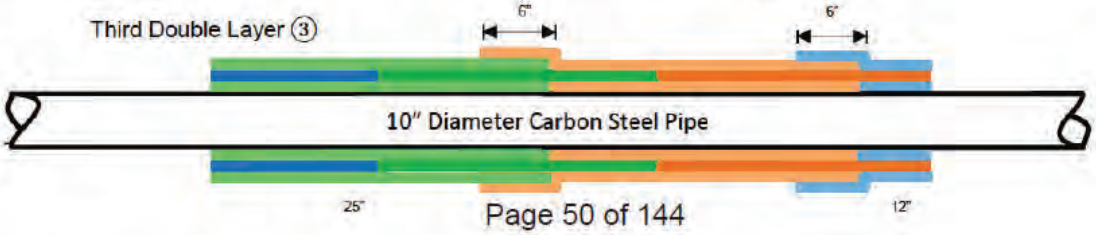

2.0 PIPE SUPPORT TIE IN

1. Stop first double layer of carbon fiber 3" to 5" away from the edge of the temporary support (See Fig. 2 Layer 1).
2. Stop second double layer of carbon fiber 6" to 10" away from the edge of the temporary support (See Fig. 2 Layer 2).
3. Stop third double layer of carbon fiber 9" to 15" away from the edge of the temporary support (See Fig. 2 Layer 3).
4. Relocate temporary pipe support approximately two (2) feet onto cured carbon fiber surface.
5. Sand all carbon fiber surfaces with 80 – 120 grit sandpaper within the repair area to remove 100% of glossy areas, extending one (1) foot beyond the exterior carbon fiber surface coating.
6. Apply High Strength Epoxy Adhesive # 2 at 5 -10 mils with a roller onto repair area.
7. Apply first double layer of carbon fiber to gap. The first layer should start and stop at a minimum of 3" onto the tie in area on both sides (See Fig. 3 Layer 1).
8. Apply second double layer of carbon fiber to the gap. The second layer should start and stop at least 3 inches onto the second step down on either side. (See Fig. 3 - Layer 2)
9. Apply third double layer of carbon fiber to the gap. The third layer should start and stop at least 3 inches onto the third step down on either side. (See Fig. 3 - Layer 3)
10. Allow layers to cure for 24 hours, prior to applying final epoxy coating.
11. Apply final epoxy coat following the standard specification.

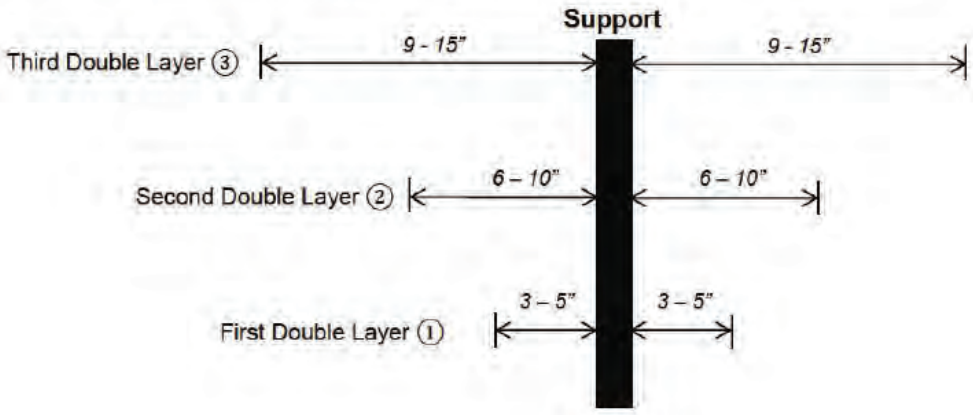

***Figure 2** - Temporary Support Gaps – Specified Clearances (12" x 12" Block Support)*

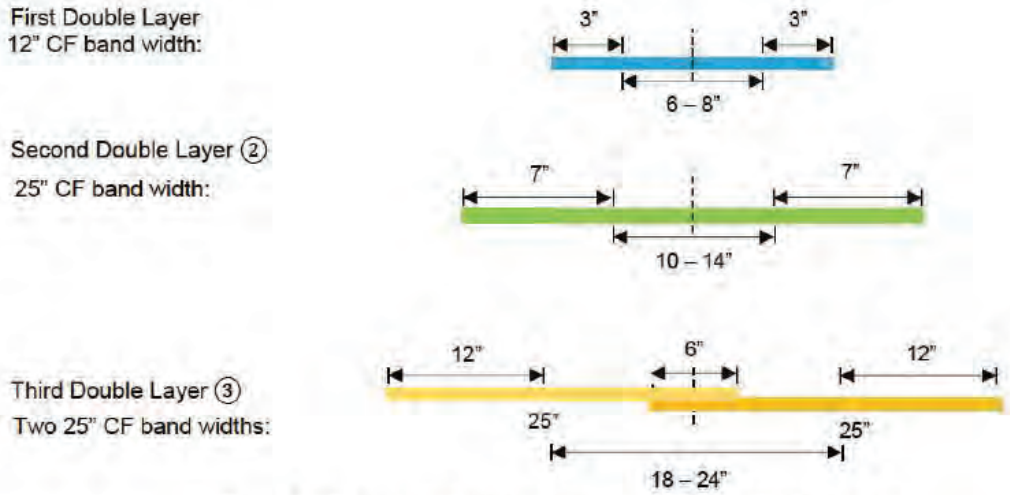

Figure 3– *Temporary Support Gaps - Carbon Fiber Replacement*

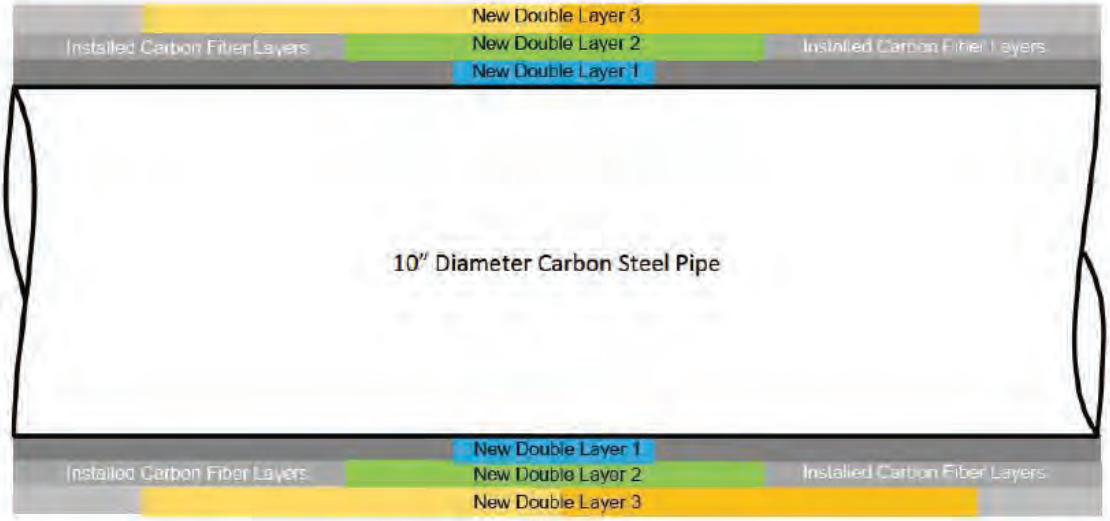

Figure 4 *– Completed Support Repair Pipe*

3.0 AIR BUBBLE REPAIRS

REPAIR #1 – REPAIRS OF LIFTED EDGES

When to use this method: Repair #1 will be used when a minor lifted edge or other superficial defect is present in the composite wrap.

1. Visually identify the defect
2. Remove the defect by sanding or lightly grinding the lifted edge until it is flush with the composite wrap
3. Remove dust/debris in the repair area by vacuum or solvent wipe
4. Fill any holidays or voids with FRP Repair Putty
5. Top coat with HP-300 Epoxy at 15 – 20 mils DFT via brush or roller
6. Allow a minimum of 24 hours to cure before backfilling

REPAIR #2 – REPAIRS OF AIR BUBBLES IN THE OUTERMOST TWO LAYERS OF THE COMPOSITE SYSTEM

Use this method when the defect must be analyzed to determine the depth within the composite wrap. A depth of less than 0.080 inches shows that the defect was in the two outermost layers of composite. This repair procedure should only be used for defects that are identified to be in the outermost two layers.

1. Visually identify the defect
2. Remove carbon fiber above the bubble or wrinkle until the lifted area of carbon fiber is completely removed.
    a. Carbon fiber can be removed via cutting with a knife or by grinding away the edges of the defect
3. Analyze the removed carbon fiber to verify the thickness of composite removed and ensure that the correct repair procedure is being followed.
4. Sand or lightly grind the entire circumference of the repair area to ensure adequate adhesion of the repair.
5. Remove dust/debris in the repair area by vacuum or solvent wipe
6. Fill any holidays or voids with FRP Repair Putty
7. Prime the entire repair area with 5 – 15 mils of FRP 120 HT – Adhesive applied via brush or roller
8. Apply a 12" wide band of CF-500 BD saturated with FRP 210 HT that is two times the pipe circumference plus six inches.
9. Apply a second 12" wide band of CF-500 BD saturated with FRP 210 HT with a 6 inch overlap. The overlap should be centered on the defect.
10. Top coat the repair area according to the above specification with 2 to 3 coats at 15 – 20 mils of HP-300 Epoxy via brush or roller.
11. Allow a minimum of 24 hours to cure before backfilling.

REPAIR #3 – REPAIRS OF AIR BUBBLES/WRINKLES IN LAYERS 3 AND 4

Use this method when the defect must be analyzed to determine the depth within the composite wrap. A depth of between 0.080 and 0.160 inches shows that the defect is in the 3rd or 4th layers of composite. This repair procedure should only be used for defects that are identified to be in the 3rd or 4th layer of the composite wrap.

1. Visually identify the defect
2. Remove carbon fiber above the bubble or wrinkle until the lifted area of carbon fiber is completely removed.
   a. Carbon fiber can be removed via cutting with a knife or by grinding away the edges of the defect
3. Analyze the removed carbon fiber to verify the thickness of composite removed and ensure that the correct repair procedure is being followed.
4. Sand or lightly grind the entire circumference of the repair area to ensure adequate adhesion of the repair.
5. Remove dust/debris in the repair area by vacuum or solvent wipe
6. Fill any holidays or voids with FRP Repair Putty
7. Prime the entire repair area with 5 – 15 mils of FRP 120 HT – Adhesive applied via brush or roller
8. Apply a 12" wide band of CF-500 BD saturated with FRP 210 HT that is two times the pipe circumference plus six inches.
9. Apply a second 12" wide band of CF-500 BD saturated with FRP 210 HT with a 6 inch overlap. The overlap should be centered on the defect.
10. Apply a 25" wide band of CF-500 BD saturated with FRP 210 HT centered over the defect area.
11. Top coat the repair area with 15 – 20 mils of HP-300 Epoxy via brush or roller.
12. Allow a minimum of 24 hours to cure before backfilling.

REPAIR #4 – REPAIRS OF AIR BUBBLES/WRINKLES UNDER THE 4TH LAYER OF THE COMPOSITE SYSTEM

Use this method when the defect must be analyzed to determine the depth within the composite wrap. A depth greater than 0.160 inches shows that the defect is below the 4th layers of composite. This repair procedure should only be used for defects that are identified to be below the 4th layer of the composite wrap.

7 Visually identify the defect
8 Remove carbon fiber above the bubble or wrinkle until the lifted area of carbon fiber is completely removed.
9 Carbon fiber can be removed via cutting with a knife or by grinding away the edges of the defect
10 Analyze the removed carbon fiber to verify the thickness of composite removed and ensure that the correct repair procedure is being followed.

4.0 INSTALLATION OF HDPE WELD CAP COVERS AND TRANSITION WEDGES

The High Density Polyethylene (HDPE) transitional wedge was designed and machined by Construction Services see attached drawings and safety data sheet (SDS) of the three sleeve designs. The transitional wedge is used to reduce the amount of repair putty needed. They will also eliminate the putty curing time required prior to apply carbon fiber composite. They will be used to smooth the transition from the welded barrels and caps of the High Pressure Fluid Filled Feeder (HPFF) and oil return lines to the original pipe diameter. The installation process of the transitional wedges is applied as follows:

4.1 WELD CAP COVERS

1. Clean the soil and debris, and remove any delaminated green tape from the pipe. All exposed metal surfaces shall be covered with an approved galvanic barrier. (HOLD)
2. Visually inspect the HDPE weld cap cover prior to installation. Ensure no hard edges or corners will be present once the piece is installed.
3. Place the weld cap cover directly over the weld cap.
4. Use ratchet straps to ensure full contact to pipe coated with green tape.
5. Check for proper fit-up of the weld cap to the pipe coated with green tape.
6. Wrap bi-directional fiberglass tape around wedge cover.
7. Remove the strap that was applied in Step 4.
8. Verify wedge and tape does not expand creating an air gap between the pipe and the wedge cover. (HOLD)
9. Mix FRP Repair Putty in accordance with the manufacturer's product data sheet.
10. Apply FRP Repair Putty to the weld cap, longitudinal seams and the circumferential seams of the wedge and on top of the fiberglass tape. Apply FRP Repair Putty to any raised edges. Verify all grooves and edges are 100% filled and tapered, and no voids are present. (HOLD)
11. Multiple layers of FRP Repair Putty may be required to smooth all edges and fill all voids on the weld cap cover. Allow the FRP Repair Putty a minimum of 12 hours to cure prior to applying another layers
12. Visually inspect the final transition to ensure that the grooves and wedges are completely filled. Ensure the Fiberglass tape is completely covered with FRP Repair Putty. (HOLD)
13. Allow a minimum of 12 hours of cure time after the last addition of FRP Repair Putty. Weld cap and transition are now ready to be wrapped with Carbon Fiber Composite.

4.2 HDPE TRANSITION WEDGES

1. Clean the soil and debris, and remove any delaminated green tape from the pipe. All exposed metal surfaces shall be covered with an approved galvanic barrier. (HOLD)
2. Place the transitional wedge halves placed on the pipe (either 10" or 5") with the longitudinal seams at the 3 o'clock and 9 o'clock positions whenever possible.
3. Use ratchet straps to pull together the two half sections of the wedges, and to allow transition wedges to have full contact to pipe coated with green tape.
4. Verify there is a gap on the longitudinal seams, and the wedges are in full

contact with the pipe circumference. (HOLD)

5. Check for proper fit-up of the wedge to the barrel and wedge to host pipe.
6. Wrap bi-directional fiberglass tape around wedge in the machined grooves provided.
7. Remove the strap that was applied in Step 3. Verify wedge and tape does not expand creating an air gap between the pipe and the wedge. (HOLD)
8. Mix FRP Repair Putty in accordance with the manufacturer's product data sheet.
9. Apply FRP Repair Putty to the weld cap, longitudinal seams and the circumferential seams of the wedge and on top of the fiberglass tape. Apply FRP Repair Putty to any raised edges. Verify all grooves and edges are 100% filled and tapered, and no voids are present. (HOLD)
10. Multiple layers of FRP Repair Putty may be required to smooth all edges and fill all voids on the weld cap cover. Allow the FRP Repair Putty a minimum of 12 hours to cure prior to applying another layers.
11. Visually inspect the final transition to ensure that the grooves and wedges are completely filled. Ensure the Fiberglass tape is completely covered with FRP Repair Putty. (HOLD)
12. Allow a minimum of 12 hours of cure time after the last addition of FRP Repair Putty. Barrel and transition are now ready to be wrapped with Carbon Fiber Composite.

Notes:

1. No grinding or modification shall be performed in the field.
2. Carbon Fiber cannot be wrapped immediately over the transitional wedge, only after 12 hours minimum cure.
3. All personnel shall be trained to install the wedges
4. To ensure QA/QC process during fabrication wedges will be weight in shop after manufacturing to establish a baseline.

5.0 STANDARD BARREL REPAIR

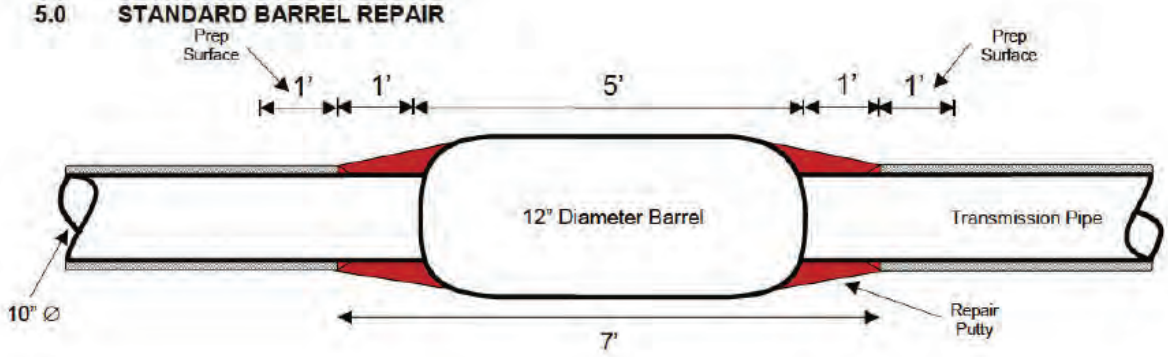

1. Clean the surface of the pipe prior to applying FRP Repair Putty or prefabricated barrel wedges.
2. Use FRP Repair Putty or prefabricated HDPE wedges to create a smooth transition between the barrel and the pipe to facilitate Carbon Fiber installation. Allow putty to cure prior to wrapping.
3. The transition from the end of a barrel should be approximately 12 inches long for every 1 inch of drop. Transition wedges can be used
4. Apply FRP 120 HT – High Strength adhesive at 5 – 10 mils DFT.
5. Apply a total of 6 layers of CF-500 BD over barrel and pipe. On pipe ends and weld caps, six single layers may be used to ensure air bubbles are not present on uneven pipe circumferences.

6.0 20" BARREL REPAIR

During a carbon fiber composite wrap project, it is possible to encounter 20" barrels. Therefore, creating a transition from the 10" diameter pipe to a 20" diameter barrel with Repair Putty becomes very difficult and time consuming. In order to reduce the amount of Repair Putty and time spent transitioning the barrel, a carbon steel transition cone can be welded in place by following the procedure listed below:

6.1 Remove any Green TR Tapecoat on the pipe a minimum of 18" from the weld area.
6.2 UT test the weld area to verify the existing wall thickness is greater than 50% in accordance with CE-TI-3356.
6.3 Stich weld the transition barrel in position circumferentially and longitudinally in accordance with CE-TI-3356.
6.4 Seal weld the longitudinal seam after the transition cone is positioned correctly in accordance with CE-TI-3356.
6.5 Grind all the welds flush to the surface and remove any attachment weld used to position the cone.
6.6 Apply 4" Green TR Tapecoat over the entire length of the cone plus 2" on each end.
6.7 Apply additional Repair Putty to create a smooth transition at the 10" diameter pipe to the 20" diameter barrel and any other areas that require a smooth transition.
6.8 Ensure any and all bare steel is covered with Green TR Tapecoat, Repair Putty, or Fiberglass.

7.0 HIGH HAT REPAIRS

During a carbon fiber composite wrap project, it is possible to encounter high hats on pipes. High hats require a specialized wrapping procedure to ensure full repair strength. The high hats also require training and a mock up for the individuals performing the repair.

SURFACE PREPARATION

7.1 The area surrounding the High hat and a minimum of 18 inches of pipe in both directions shall be prepared via grit blasting to a minimum SSPC SP-6 Near White Metal finish with a minimum 3 mil angular profile. Course Aluminum Oxide should be used to blast just like an adhesion zone.

7.1.1 Surface shall be vacuumed free of all dust and debris prior to application of the composite reinforcement system.

APPLICATION

7.2 The FRP 120 HT – high strength adhesive will be applied to the entire pipe section via roller at 5 – 10 mils DFT.

7.2.1 Allow the FRP 120 HT a minimum of 8 hours to cure.

7.3 FRP Repair Putty will be applied to the bottom joint where the high hat meets the feeder pipe. The putty is used to create a cove that softens the 90° transition. Approximately a 1 inch cove is recommended.

7.4 GF-300 BD shall be saturated with FRP 210 HT and applied to the pipe to cover 100% of the exposed metal.

7.4.1 Relief cuts will be required to avoid air bubbles around the high hat

7.4.2 We recommend using standard, steel scissors for the relief cuts since they will be done on wet fabric.

7.5 HOLD POINT: NACE Level III Inspector to verify that no bare metal is exposed and that the bottom of the high hat has putty applied correctly.

7.6 The wrap sequence will require 7 pieces of carbon fiber per layer. CF-500 BD must be fully saturated with FRP 210 HT saturating resin prior to installation.

7.7 1st piece will be a 6" wide band of CF-500 BD that starts on the South side of the High Hat. The piece will be laid along the weld seam at the base of the high hat, continue around the feeder and terminate at the weld seam on the other side of the high hat.

7.8 2nd piece will be a 6" wide band of CF-500 BD that overlaps the previous piece by 50%. This strip shall continue up the front and back face of the high hat and wrap around the feeder.

7.9 3 3rd piece will be a 6" wide band of CF-500 BD that overlaps the previous piece by 50%. This strip shall continue up the front and back face of the high hat and wrap around the feeder.

7.10 4th piece will be a 6" wide band of CF-500 BD that overlaps the previous piece by 50%. The strip will start on the North side of the High Hat. The piece will be laid along the weld seam at the base of the high hat, continue around the feeder and terminate at the weld seam on the other side of the high hat.

7.11 5th piece will be a cap that extends over the entire high hat, with relief cuts at the top of the high hat and at the base of the high hat so it sits smoothly onto the pipe body.

7.11.1 Approximately 12" x 30" rectangle of CF should be adequate to completely cover high hat.

7.12 6th piece will be a circumferential band that is applied around the high hat itself. No relief cuts should be required.

7.12.1 CF should be cut so that it covers the entire height of the high hat and wraps around the high hat itself with a 6" overlap.

7.13 7th piece will be a 25" wide band of CF-500 BD which extends around the feeder pipe only with a + shaped hole cut out to fit around the high hat.

7.13.1 25" wide CF cut to the Circumference of the barrel plus 6 inches for overlap.

7.14 Repeat steps 8 – 14 five additional times to provide a full 6 layer reinforcement.

7.15 Ensure that the relief cuts for Step 12 are rotated around the pipe and are not in the same location for each layer that is applied. Step 12 and 15 are the only steps that require relief cuts in the CF-500 BD for proper installation.

7.16 This repair detail for a high hat can be terminated with a hard end and a sectional repair detail can be used to tie into the existing Carbon Fiber on the remainder of the feeder.

7.17 Due to the complexity of the above procedure, this application should only be done with the presence of the OEM representative onsite.

8.0 MANHOLE OR POINT OF ENTRY (POE) TERMINATION REPAIRS

Carbon fiber composite wrap projects may start and/or end at a manhole (MH). When this occurs, a custom repair shall be created. If the pipes running through the MH have identical or similar properties, the following procedure may be used with approval from the OEM Representative and the Company Engineering Representative.

8.1 TERMINATION DETAIL #1 – TERMINATION OF M52 FEEDER WITH HIGH HAT TWO INCHES INSIDE MANHOLE

The following procedure is specific for M52 Feeder pipe as it enters manhole MH61741. The M52 Feeder has a large interruption, referred to as a high hat, approximately 2 - 3 inches past the inside wall of the manhole.

1. Remove any exposed wax tape and green tape starting at the center point of the High hat inside the manhole and finishing at the beginning of the barrel transition.
    a. Including six (6) inches up the south facing side of the High Hat (half the circumference of the High Hat).
2. Remove any adhesive, dirt and other debris on the surface of the pipes
3. Grit blast a circumferential band starting at the center point of the High hat inside the manhole and continuing 12" onto the existing adhesion zone #1 excluding puttied area. Grit blast to an SSPC SP-10 Near White Metal blast with a minimum profile of 3 mils.
    a. Front face of the High Hat should also be blasted at least 5 inches up.
    b. HOLD POINT: NACE inspector to verify cleanliness and profile readings
4. Remove dust from the surface of the pipe then apply the FRP 120 HT – High strength adhesive at 5 – 10 mils DFT via paint roller. Apply adhesive over any exposed metal.
5. Saturate with 210 HT and apply GF-300 BD with a 6 inch circumferential overlap, to cover any exposed metal and provide a galvanic barrier prior to application of the Carbon Fiber composite. Ensure that the fiberglass extends at least 3 inches up the high hat covering just the south facing half of the surface and onto the existing adhesion zone. See Figure 1 for more details.
    a. HOLD POINT: Visual inspection that no bare metal is exposed prior to wrapping with CF
6. Saturate CF-500 BD with 210 HT and apply eight layers of composite around the pipe, using standard procedures for offsetting seams and barrel transitions. See Figure 1 for specifics on North side stopping point.
    a. We recommend starting on the North side of the feeder and working South
    b. All 8 layers should end at the same point on the North side of the Feeder, and terminate at least 12" onto the adhesion zone #1 on the South side.
    c. 2 inches of fiberglass shall be visible past the end of the Carbon Fiber at the high hat area/north side to ensure an adequate galvanic barrier was installed.
7. Apply HP-300 Epoxy to the Feeder in 3 coats (Red/Grey/Red) at 15 – 20 mils per coat via roller. HP-300 Epoxy should extend past the end of the fiberglass by at least 1 inch to the blasted pipe surface.
8. Allow the HP-300 Epoxy to cure and apply a band of 4" wide Green tape around the circumference of the feeder that extends 2 inches past the end of the Carbon Fiber reinforcement and 2 inches onto the Carbon Fiber reinforcement.

8.2 TERMINATION DETAIL #2 – TERMINATION OF M51 FEEDER

The following procedure is specific for M51 Feeder pipe as it enters manhole MH61741. The M51 Feeder has a small weld cap approximately 9 - 10 inches past the inside wall of the manhole.

1. Remove any exposed wax tape and green tape starting 8 inches inside the manhole and finishing at the beginning of the barrel transition
2. Remove any adhesive, dirt and other debris on the surface of the pipes
3. Grit blast a circumferential band starting 8 inches inside of the manhole and continuing 12" onto the existing adhesion zone #1 excluding puttied area. Grit blast to an SSPC SP-10 Near White Metal blast with a minimum profile of 3 mils.
    a. HOLD POINT: NACE inspector to verify cleanliness and profile readings
4. Remove dust from the surface of the pipe then apply the FRP 120 HT – High strength adhesive at 5 – 10 mils DFT via paint roller. Apply adhesive over all exposed Metal
5. Saturate with 210 HT and apply GF-300 BD with a 6 inch circumferential overlap, to cover any exposed metal and provide a galvanic barrier prior to application of the Carbon Fiber composite.
    a. HOLD POINT: Visual inspection that no bare metal is exposed prior to wrapping with CF
6. Saturate CF-500 BD with 210 HT and apply eight layers of composite around the pipe, using standard procedures for offsetting seams and barrel transitions.
    a. We recommend starting on the North side of the feeder and working South
    b. All 8 layers should end at the same point, 6 inches inside the manhole on the North side and terminate at least 12" onto the adhesion zone #1 on the South side.
    c. 2 inches of fiberglass shall be visible past the end of the Carbon Fiber to ensure an adequate galvanic barrier was installed.
7. Apply HP-300 Epoxy to the Feeder in 3 coats (Red/Grey/Red) at 15 – 20 mils per coat via roller. HP-300 Epoxy should extend past the end of the fiberglass by at least 1 inch.
8. Allow the HP-300 Epoxy to cure and apply a band of 4" Green tape around the circumference of the feeder that extends 2 inches past the end of the Carbon Fiber reinforcement and 2 inches onto the Carbon Fiber reinforcement.

8.3 TERMINATION DETAIL #3 – TERMINATION OF M51 AND M52 RETURN LINES OUTSIDE OF MANHOLE

The following procedure is specific for M51 and M52 Return lines that route outside of the Manhole MH61741.

1. Terminate the M51 and M52 return lines within 5 ft of the manhole location. The Carbon fiber shall be terminated in a pipe support style step down.
2. Apply the HP-300 Epoxy topcoat, extending at least 1 inch past the end of the step down and cover 100% of the exposed steel. Apply 3 coats at 15 – 20 mils per coat via paint roller.
3. Allow the HP-300 Epoxy to cure and apply a band of Green tape around the circumference of the feeder that extends 2 inches past the end of the Carbon Fiber reinforcement and 2 inches onto the Carbon Fiber reinforcement.

Custom NCR Repairs - Air Bubble Repairs on Pipe support Details

Repair #1 – Repairs of lifted edges

When to use this method: CA #1 will be used when a minor lifted edge or other superficial defect is present in the composite wrap.

1. Visually identify the defect
2. Remove the defect by sanding or lightly grinding the lifted edge until it is flush with the composite wrap
3. Remove dust/debris in the repair area by vacuum or solvent wipe
4. Fill any holidays or voids with FRP Repair Putty
5. Top coat with HP-300 Epoxy at 15 – 20 mils DFT via brush or roller
6. Allow a minimum of 24 hours to cure before backfilling

Repair #2 – Repairs of Air Bubbles/Wrinkles in the outermost two layers of the composite system

When to use this method: The defect must be analyzed to determine the depth within the composite wrap. A depth of less than 0.080 inches shows that the defect was in the two outermost layers of composite. This repair procedure should only be used for defects that are identified to be in the outermost two layers.

1. Visually identify the defect
2. Remove carbon fiber above the bubble or wrinkle until the lifted area of carbon fiber is completely removed.
    a. Carbon fiber can be removed via cutting with a knife or by grinding away the edges of the defect
3. Analyze the removed carbon fiber to verify the thickness of composite removed and ensure that the correct repair procedure is being followed.
4. Sand or lightly grind the entire circumference of the repair area to ensure adequate adhesion of the repair.
5. Remove dust/debris in the repair area by vacuum or solvent wipe
6. Fill any holidays or voids with FRP Repair Putty
7. Prime the entire repair area with 5 – 15 mils of FRP 120 HT – Adhesive applied via brush or roller
8. Apply a 12" wide band of CF-500 BD saturated with FRP 210 HT that is two times the pipe circumference plus six inches.
9. Apply a second 12" wide band of CF-500 BD saturated with FRP 210 HT with a 6 inch overlap. The overlap should be centered on the defect.
10. Top coat the repair area with 15 – 20 mils of HP-300 Epoxy via brush or roller.
11. Allow a minimum of 24 hours to cure before backfilling

Air Bubble



□

Repair #3 – Repairs of Air Bubbles/Wrinkles in layers 3-4 of the composite system

When to use this method: The defect must be analyzed to determine the depth within the composite wrap. A depth of between 0.080 and 0.160 inches shows that the defect is in the 3rd or 4th layers of composite. This repair procedure should only be used for defects that are identified to be in the 3rd or 4th layer of the composite wrap.

1. Visually identify the defect
2. Remove carbon fiber above the bubble or wrinkle until the lifted area of carbon fiber is completely removed.
    a. Carbon fiber can be removed via cutting with a knife or by grinding away the edges of the defect
3. Analyze the removed carbon fiber to verify the thickness of composite removed and ensure that the correct repair procedure is being followed.
4. Sand or lightly grind the entire circumference of the repair area to ensure adequate adhesion of the repair.
5. Remove dust/debris in the repair area by vacuum or solvent wipe
6. Fill any holidays or voids with FRP Repair Putty
7. Prime the entire repair area with 5 – 15 mils of FRP 120 HT – Adhesive applied via brush or roller
8. Apply a 12" wide band of CF-500 BD saturated with FRP 210 HT that is two times the pipe circumference plus six inches.
9. Apply a second 12" wide band of CF-500 BD saturated with FRP 210 HT with a 6 inch overlap. The overlap should be centered on the defect.
10. Apply a 25" wide band of CF-500 BD saturated with FRP 210 HT centered over the defect area.
11. Top coat the repair area with 15 – 20 mils of HP-300 Epoxy via brush or roller.
12. Allow a minimum of 24 hours to cure before backfilling

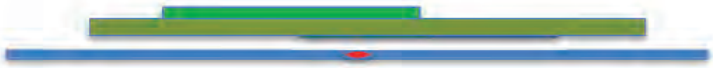

□

□

Repair #4 – Repairs of Air Bubbles/Wrinkles below the 4th layer of the composite system

When to use this method: The defect must be analyzed to determine the depth within the composite wrap. A depth greater than 0.160 inches shows that the defect is below the 4th layers of composite. This repair procedure should only be used for defects that are identified to be below the 4th layer of the composite wrap.

1. Visually identify the defect
2. Remove carbon fiber above the bubble or wrinkle until the lifted area of carbon fiber is completely removed.
    a. Carbon fiber can be removed via cutting with a knife or by grinding away the edges of the defect

Analyze the removed carbon fiber to verify the thickness of composite removed and ensure that the correct repair procedure is being followed.
Repair via the procedure on page 68 of this specification.

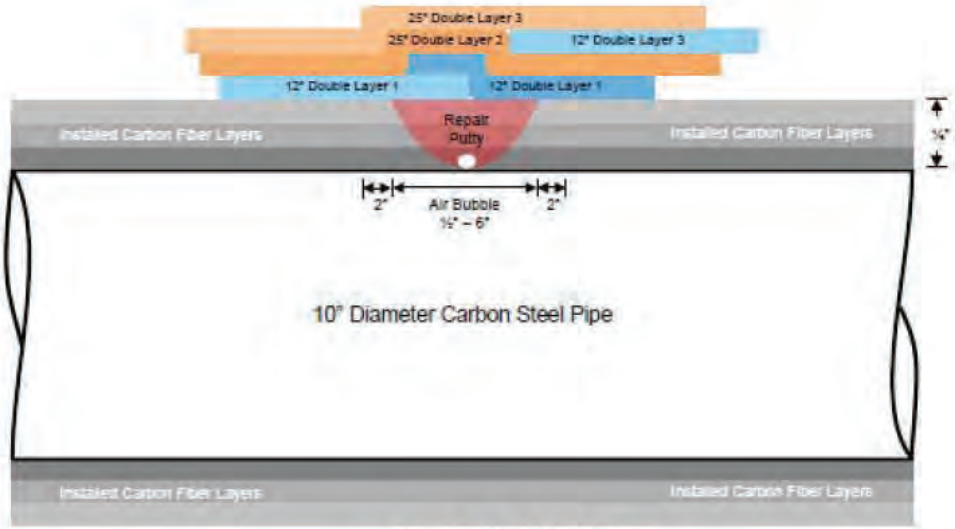

Figure 5 – Air Bubble Repair

□

6/27/19

Carbon Fiber NCR Corrective Actions

[redacted]





Corrective Action #4 – Repairs of Air Bubbles/Wrinkles below the 4th layer of the composite system

When to use this method: The defect must be analyzed to determine the depth within the composite wrap. A depth greater than 0.160 inches shows that the defect is below the 4th layers of composite. This repair procedure should only be used for defects that are identified to be below the 4th layer of the composite wrap.

1. Visually identify the defect
2. Remove carbon fiber above the bubble or wrinkle until the lifted area of carbon fiber is completely removed.
    a. Carbon fiber can be removed via cutting with a knife or by grinding away the edges of the defect
3. Analyze the removed carbon fiber to verify the thickness of composite removed and ensure that the correct repair procedure is being followed.
4. Sand or lightly grind the entire circumference of the repair area to ensure adequate adhesion of the repair.
5. Remove dust/debris in the repair area by vacuum or solvent wipe
6. Fill any holidays or voids with FRP Repair Putty
7. Prime the entire repair area with 5 – 15 mils of FRP 120 HT – Adhesive applied via brush or roller
8. Apply a 12" wide band of CF-500 BD saturated with FRP 210 HT that is two times the pipe circumference plus six inches.
9. Apply a second 12" wide band of CF-500 BD saturated with FRP 210 HT with a 6 inch overlap. The overlap should be centered on the defect.
10. Apply a 25" wide band of CF-500 BD saturated with FRP 210 HT centered over the defect area.
11. Apply double layer three as per the figure below
12. Top coat the repair area with 15 – 20 mils of HP-300 Epoxy via brush or roller.
13. Allow a minimum of 24 hours to cure before backfilling

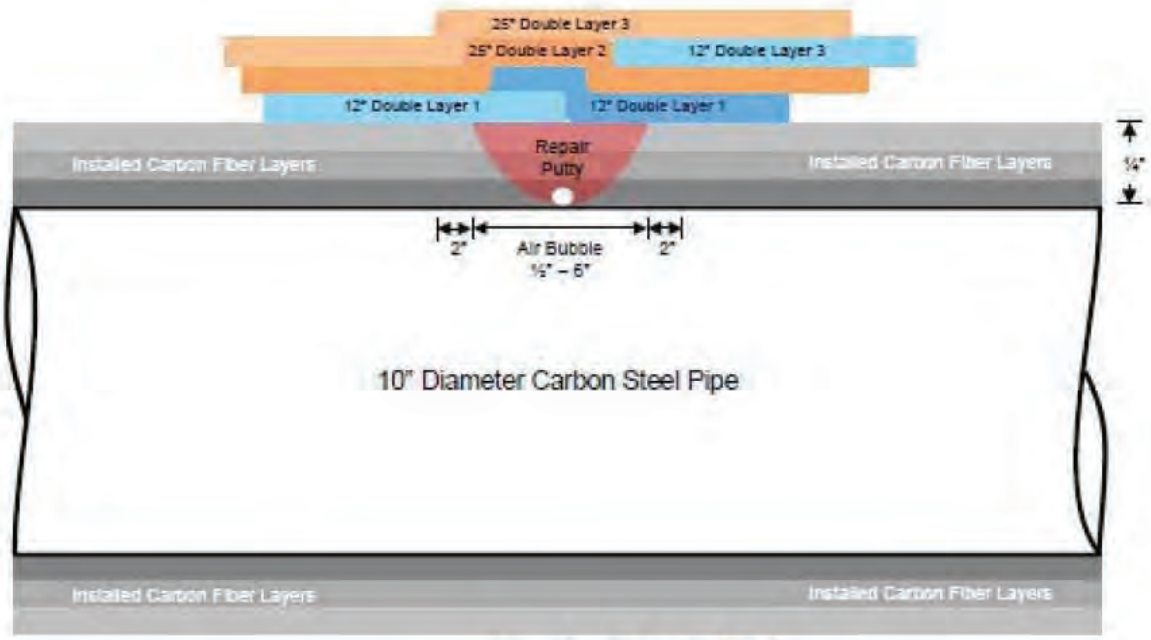

Figure 5 – Air Bubble Repair

Custom NCR Repairs - Air Bubble Repairs on Pipe Support Details

Repair #5 – Air Bubble Is Found On the Bottom Double Layer at the End of a Pipe Support Detail

Corrective Action:

1. Remove Air bubble by cutting it out or grinding it off
2. Sand around the air bubble to remove any roughness or voids. Sand the entire circumference of the repair/tie in area.
3. Ensure no bare steel is present.
4. Clean the surface then apply FRP Repair Putty to fill in the air bubble void.
5. Proceed with the pipe support tie in procedures as usual.

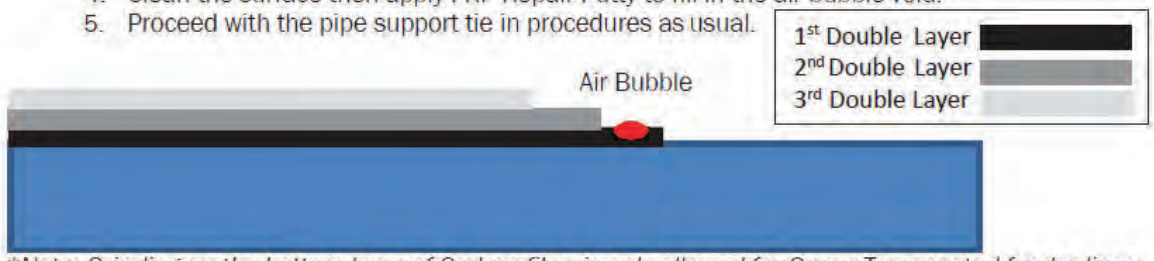

Note: Grinding on the bottom layer of Carbon fiber is only allowed for Green Tape coated feeder lines. Coal tar may contain asbestos and grinding is not permitted.

Repair #6 – Air Bubble Is Found In the Middle Double Layer in the Center Section of the Pipe Support

Corrective Action:

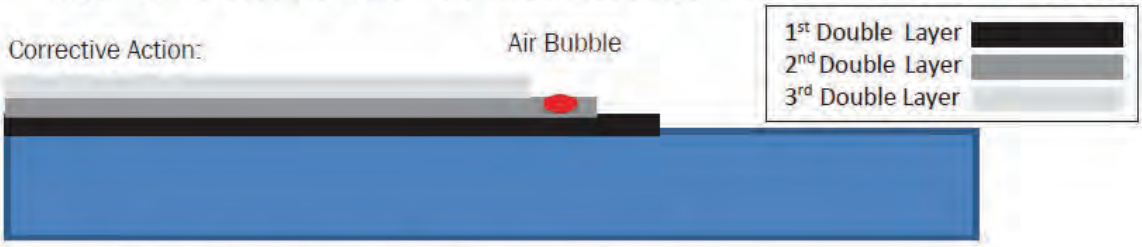

1. Remove Air bubble by cutting it out or grinding it off
2. Sand around the air bubble to remove any roughness or voids. Sand the entire circumference of the repair/tie in area.
3. Ensure no bare steel is present.
4. Clean the surface then apply FRP Repair Putty to fill in the air bubble void.
5. Apply FRP 120 HT Adhesive at 5 – 10 mils via roller
6. Saturate a 12" Double band of CF-500 BD. Wrap as shown in red on the illustration below
7. Saturate a 12" Double band of CF-500 BD. Wrap as shown in green on the illustration below
8. A new step down should be present as shown in the illustration below.

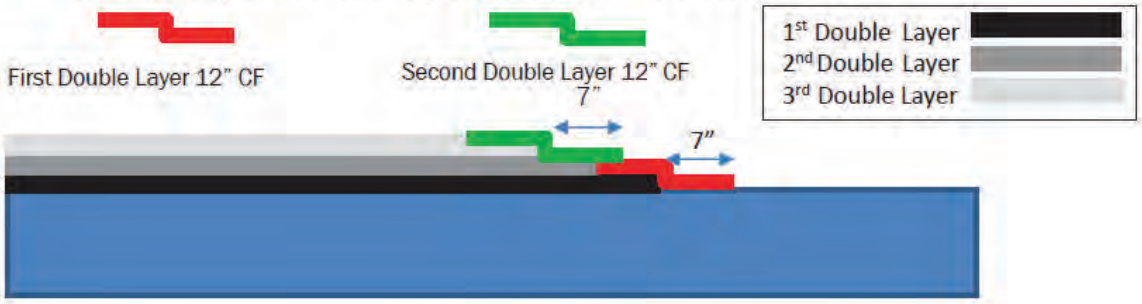

Steps to Complete Step-Up and Step-Down Support Repairs

1. If the Repair has been allowed to cure, lightly sand the circumference, clean the surface and apply FRP 120 HT – Adhesive.
2. Fill in the first double layer of CF-500 BD, stopping 10 - 12 inches over the tie in area (shown in Black Below)
3. Fill in the second double layer of CF-500 BD, stopping an additional 5 – 7 inches over the tie in area. (Shown in Dark Grey)
4. Fill in the third double layer of CF-500 BD, stopping an additional 5 – 7 inches over the tie in area. (Shown in Light Grey)

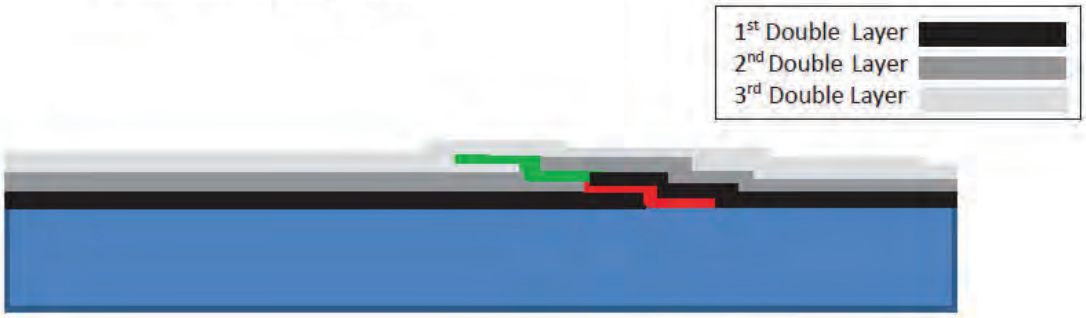

Note: Air bubble thickness must be measured. Repair #6 is designed for an air bubble in the outermost layers, in this case, the exposed 3rd and 4th layer on the pipe support. A depth of 0.080 inches or less shows that the air bubble is in the outer two layers.

Adhesion Zone – ASTM D4541-17 Adhesion Testing Protocol

The Contractor shall be required to prepare one (1) 12" x 12", grit blasted, ¼" steel plate to NACE 2/SSPC-SP-10 "Near White Metal Blast Finish" with a 3 mil minimum angular profile every shift they are grit blasting the adhesion zone(s). The plate shall be prepared in parallel to the adhesion zone(s) it represents and will be used in a destructive test to verify the adhesion of the composite to the bare steel for each set of adhesion zones.

Preparation of the Adhesion Test Plate

1. Grit blast 12" x 12" panel at the same time the corresponding adhesion zones are blasted.
2. Apply a single layer of FRP 120 HT at 5 – 10 mils via brush/roller to prevent the metal surface from oxidizing.
    a. The sample plate shall have each layer of adhesive and composite materials applied at the same time as the corresponding adhesion zone(s).
3. When the FRP 120 HT is allowed to cure on the sample plate before application of the composite system, follow **Steps 4 and 5**. If GF-300 BD is applied directly to the sample plate while the initial coat of FRP 120 HT is still wet, skip **Steps 4 and 5**.
4. Sand the surface of the plate with 80 – 120 grit sand paper until the gloss has been removed, then wipe down with a volatile solvent like MEK or Denatured Alcohol.
5. Allow the surface to dry for at least 20 minutes and apply another layer of FRP 120 HT at 5 – 10 mils via brush/roller.
6. Cut a 12" x 12" piece of GF-300 BD and saturate with FRP 210 HT. Ensure the fabric is fully saturated and apply to the steel panel, using your fingers to remove any air bubbles.
7. Cut a 12" x 12" piece of CF-500 BD and saturate with FRP 210 HT. Ensure the fabric is fully saturated and apply to the steel panel, using your fingers to remove any air bubbles.
8. Cut out a 6" x 12" piece of CF-500 BD and saturate with FRP 210 HT. Ensure the fabric is fully saturated and apply to one half of the steel panel, using your fingers to remove any air bubbles.
9. Visually inspect the adhesion dollies to ensure they are fully blasted and have a consistent, rough profile.
    a. See Blasting of Adhesion Dolly procedures in **Appendix I**.
10. Apply a small quantity of FRP 210 Saturant to the bottom of the adhesion dolly by dabbing with a gloved finger, then gently place the dolly on the surface of the sample panel. Tap the dolly in place to ensure it does not slide.
    a. Apply four (4) dollies on each side of the adhesion test panel, for a total of eight (8) dollies. Space the dollies evenly on each side as shown in **Picture 1**.

11. Allow the sample to cure for a minimum of 48 hours at ambient temperature (70°F) prior to handling, shipping or post-curing.
12. Fill out all appropriate QC documentation, which includes information such as the person making the sample panel, the name and location of the adhesion zones, and the batch numbers of all the products being used on the sample, see **Picture 2**.

Picture 1. Adhesion Test Plate



Picture 2. QC Documentation

conEdison

FORM # 14 – ADHESION ZONE PULL TEST SAMPLE (ASTM D4541)

Adhesion Zone Location: _____ (distance from MH)

Sample #	
Sample Date	
Sample Location	
Saturant 210 HT Part A Batch#	
Saturant 210 HT Part B Batch#	
Time Mixed	
Carbon Fiber Fabric Lot #	
Fiberglass Fabric Lot #	
Environmental Conditions	
Overcoat Window Status	
Name of Person Taking Readings	
Name of Person Making Sample	
Date Removed From Cured Location	
Date of Received Results	

Yes	No	N/A	INSPECTION RESULTS
☐	☐	☐	Are any rust plumes present?
☐	☐	☐	Did the level of cleanliness meet SSPC-SP-10?
☐	☐	☐	Was the plate grit blasted during the shift?
☐	☐	☐	If NO, when was it blasted and primed? _____
☐	☐	☐	Are all the readings above 3 mils?

TESTEX TAPE PROFILE READINGS FROM PLATE	

Appendix I – Blasting of Adhesion Dollies

1. Remove the dollies from the packaging and discard the cardboard inserts.
2. Wipe down the dollies with a solvent like MEK, Acetone or Denatured Alcohol to remove any dust or oils on the surface.
    a. Handle the dollies with clean gloves from this point on.
3. Put the dollies into a blast jig that holds the dollies firmly in place and raised slightly above the jig surface to allow the entire adhesion surface to be exposed for proper blasting.
4. Blast the adhesion dollies with coarse aluminum oxide media (16 or 20 grit) until the entire surface is fully blasted and no shiny spots are present.
5. Blow off or vacuum the dollies.
6. Visually inspect the dollies to ensure they are 100% blasted and no voids are present in the blast profile.
7. Put the dollies into a sealed container or sealed bag until they are ready for use during the adhesion sample panel fabrication.

Appendix II - Curing of the Adhesion Test Plate

The FRP 210 HT/CF-500 BD carbon fiber composite system must be fully cured in order to achieve the desired pull off adhesion test values. There are two possible cure methods that can achieve this objective: Standard Ambient Temperature Cure and Elevated Temperature Post-Cure. Prior to performing the ASTM D4541-17 Adhesion Test Protocol the sample plates must be fully cured by either an approved ambient temperature cure or an elevated temperature post cure. Adhesion test panels shall be prepared exactly as described in the specification and the cure conditions shall be noted on the appropriate QC form.

Elevated Temperature Post-Cure

Post-Cure condition – The sample shall be allowed to cure a minimum of 48 hours at ambient temperature (60°F to 85°F) and should be tack free and hard to the touch. The sample panel shall be placed in an oven at 180° F for a 12 hour period. The sample panel shall be allowed to cool to ambient temperature (60°F to 85°F). If the sample panel displays a maximum Barcol hardness of above 48* then the sample panel can be pulled for adhesion testing.

Please note that for all curing conditions listed above, if the sample panel does NOT reach the required maximum Barcol hardness value of 48* or above then consult with the Advanced FRP Systems before running the adhesion test.

Appendix III - Testing of Adhesion Values: (Based on ASTM D4541-17)

A wide range of adhesion testers are commercially available. We have found the PosiTester AT-A and AT-M are the best adhesion testers for this adhesion test procedure. 20 mm adhesion test dollies shall be used. Any proposed alternative adhesion testers must be verified by Consolidated Edison Engineering and Advanced FRP Systems prior to use.

1. Verify that the sample panel is fully cured and hardness tested according to the procedures detailed above.
2. Ensure the panel is between 50°F – 85°F and securely held in place prior to scoring around the dollies.
3. Pre-score around the circumference of each of the test dollies by using a 25 mm (1 inch) hand held hole saw bit. Turn the bit 4 – 5 times by hand to create a score mark on the surface of the sample.
4. Using an electric drill, score around each dolly using water to keep the cut area cool.
    a. The preferred hole saw drill bit is diamond coated or has smaller teeth that will not cause excessive damage to the composite system on the sample panel. Consult with Advanced FRP Systems for recommendations on hole saw models if guidance is required.
    b. Once the hole saw becomes dull, bend or damaged in any way it should be discarded. If excess force is required to remove the composite, the hole saw shall be replaced with a new one.
    c. A small pool of water is sufficient to cool the area, constant addition of water is not necessary.
5. For the automatic adhesion tester, turn on the adhesion tester and set it for 20 mm dollies with a 180 psi/sec pull rate.
6. Run the adhesion test and record the values and the failure mode for each dolly.

A minimum adhesion value of 2,000 psi is required to pass the adhesion test quality control test protocol. If a value of less than 2,000 psi is measured, then an analysis of the adhesion test plate must be conducted following the guidance of the ASTM D4541 specification. All test shall have the mode of failure noted in the documentation for any subsequent analysis.

FRP 120 HT

High Strength Epoxy Adhesive

Description

Advanced FRP Systems' **FRP 120 HT** – High strength adhesive was engineered to provide exceptional adhesion values to blasted steel. It is designed specifically as a high strength structural adhesive and tack coat for high temperature and high pressure composite applications. The enhanced adhesion strength is recommended for composite applications with isolated adhesion zones, substrates with cathodic protection, as well as any composite reinforcement operating above 250 psi design pressure.

Product Advantages

- Zero VOC Epoxy
- Outstanding adhesion to concrete, steel, masonry, wood and composites
- Highly blush resistant formulation
- Excellent initial green strength
- Easy to apply with roller
- Moisture Tolerant epoxy
- Low Coefficient of Linear Thermal Expansion
- Good Elongation

Suggested Application

FRP 120 HT is used to assist in application of carbon and glass fiber reinforcement used in high pressure applications or anywhere that additional adhesion is required. It provides over 4,000 psi adhesion to blasted steel and is compatible with a variety of composite reinforcement and coating options.

Performance Data

	Test Method	Results
Adhesion to Concrete	ASTM D4541	>750 psi
Adhesion to Steel	ASTM D4541	>4,000 psi
Heat Distortion Temperature	ASTM D648	297 °F
Tensile Strength	ASTM D638	13,100 psi
Tensile Modulus	ASTM D638	479 ksi
Flexural Strength	ASTM D790	12,800 psi
Flexural Modulus	ASTM D790	398 ksi
Elongation at Break	ASTM D638	9.4%

Product Characteristics

Finish: High Gloss | Color: Clear (milky) | Volume solids: 100%
Mix Ratio (by wt.): 2.5:1 | Mix Ratio (by Vol.): 2.3:1 | Density: 1.09 g/mL
Approximate Coverage: 160 sqft/gallon at 10 mils | Maximum Film Build: 10 mils per coat
Working time: 60 minutes at 75 °F | Application Temperatures: 50 - 105 °F

FRP 120 HT is sold in ½ 1, 2, and 4 gallon units.

All products are sold FOB Weymouth, MA

Cure Schedule

	50 °F (10 °C)	75 °F (24 °C)	100 °F (38 °C)
Tacky Window	1 – 8 hours	30 min. – 4 hours	15 min – 2 hours
Dry to Touch	10 hours	6 hours	3 hours
Dry Hard	48 hours	24 hours	12 hours
Overcoat Window	0 – 128 h	0 – 96 h	0 – 48 h
Cures for Service			
Return to Service	N/A	24 hours	12 hours
Full Mechanical Strength	N/A	120 hours	72 hours

If FRP 120 HT is no longer tacky enough to support reinforcing fabric, simply reapply another layer of FRP 120 HT. No additional surface prep is required if within the overcoat window.

Application Information

Consult Advanced FRP Application Guidelines Prior to use. This datasheet provides general guidelines for application Advanced FRP Composite Systems.

Contact Advanced FRP Systems for information on detailed coating specifications specific to your project.

Ensure air and substrate temperatures are between 50 - 105 °F and relative humidity is below 95%. Follow surface preparation guidelines prior to coating.

Heavily pitted areas must be filled with **FRP Repair putty** or other Advanced FRP resurfacing material prior to applying composite reinforcements.

Pour all of Part A – Hardener into Part B – Base and mix with low speed power agitator for 2-3 minutes. Using a paint stick or spatula, thoroughly scrape sides and bottom of unit. Mix with power agitator for an additional 2 minutes. Do not dilute any Advanced FRP products.

FRP 120 HT can be applied via brush, roller, or airless spray equipment. Consult Advanced FRP Application Guidelines for information on spraying FRP 120 HT.

FRP 120 HT should be applied at 5 - 10 mils in a single coat or according to the specification for your project. A second coat can be applied if the material losses its tackiness prior to applying reinforcing fabric.

While **FRP 120 HT** is required for vertical and overhead applications to hold the reinforcement in place, it will also increase the overall adhesion value of the composite reinforcement in all areas. We strongly recommend applying **FRP 120 HT**, prior to applying reinforcement, over the entire substrate for optimal results.

Surface Preparation

Composite reinforcement requires a smooth surface without gaps and voids for full effectiveness. Use FRP Repair Putty or Ceramic Repair Putty to fill any holes, voids, and smooth weld seems.

High Pressure Applications on Steel (Wet Layup): Remove all oil and grease from surface with an SSPC SP-1 Solvent Wipe. Grit blast the surface to an SSPC-SP 10 Near White Metal finish with a minimum angular surface profile of 3.0 mils. Remove dust and debris prior to applying.

Low Pressure Applications on Steel (Wet Layup): Remove all oil and grease from surface with an SSPC SP-1 Solvent Wipe. Minimum surface preparation of SSPC-SP2 Hand Tool Cleaning must be performed. For enhanced performance, an SSPC-SP6 Commercial Blast Cleaning with an angular surface profile of 1.5+ mils should be used.

Concrete (Wet Layup): Refer to SSPC-SP13 or ICRI No. 310.2, CSP 1-3 for concrete preparation guidelines. Surface should be thoroughly cleaned and dry. Concrete and mortar must be cured at least 28 days @ 75 °F. Surface must be free of laitance, concrete dust, dirt, form release, curing aids and other foreign material. Sealer 200, penetrating concrete primer, is recommended to increase adhesion and strengthen concrete prior to installing reinforcement.

Storage and Shelf Life

FRP 120 HT must be stored between 45 – 110 °F, out of direct sunlight. If stored in these conditions the product will have a 12 month shelf life.

Safety Precautions

Please consult up to date SDS's prior to use. An SDS should be available onsite whenever Advanced FRP Products are being used.

Warranty Information

Advanced FRP Systems Inc. warrants that our products are free of manufacturing defects in accordance with applicable Advanced FRP quality control parameters. Liability for products proven defective, if any, is limited to replacement of defective product or refund of purchase price as determined by Advanced FRP Systems. Additional warranties and protection are available. Contact Advanced FRP for more information.

Disclaimer

The information and recommendations set forth upon this data sheet are based on years of laboratory and field analysis. This information provides no performance guarantee and is intended to be used as guidance only as many factor effect the performance of polymeric systems. Actual exposure conditions are the best test of suitability and Advanced FRP Systems will generally provide complementary samples for field testing.

Revision Date: 3/1/2018

ADVANCED FRP SYSTEMS
PROTECT YOUR PROCESS WITH OURS

CF 500-BD

Heavy Duty, Bi-directional Carbon Fiber

Description

Advanced FRP Systems' **CF 500-BD** is a 12K, 2 x 2 Twill weave, 19.5 oz/yd^2, bi-directional carbon fiber woven fabric. **CF-500 BD** is made in the USA and meets the most stringent quality requirements for aerospace applications. This material is engineered to provide extremely strong, durable and lightweight composites for long term structural reinforcement. **CF 500-BD** is easy to apply, corrosion resistant and can be applied at any thickness required to provide adequate structural reinforcement.

Product Advantages

- Bi-Directional weave provides outstanding strength in all directions
- ASME PCC-2 Compliant reinforcement
- Lightweight, pliable fabric easily conforms to any shape
- Stable twill weave orientation
- 37.5 mils (0.0375 inch) per layer
- Single or multi-layer systems available
- Coefficient of Thermal Expansion close to carbon steel

Suggested Application

CF-500 BD is part of an ASME PCC-2 compliant pipe, tank and vessel repair system in conjunction with the appropriate saturating resin, adhesive and filler. It is commonly used for the reinforcement of steel pipes, concrete pipes, steel and fiberglass tanks as well as heat exchangers and pressure vessels.

Performance Data: (Cured with FRP Saturant 210 HT)

	Test Method	Results
Coefficient of Linear Thermal Exp.	ASTM E831	4.1 x 10^{-6} in/in °F
Tensile Strength	ASTM D3039	107,000 psi
Young's Modulus	ASTM D3039	6,290 ksi
Poisson's Ratio	ASTM D3039	0.0702
Lap Shear	ASTM D3165	3,290 psi
Elongation	ASTM D3039	2.5%
Rockwell Hardness	ASTM D2583	43
Heat Distortion Temperature	ASTM D648	269.3 °C
Effective Fabric Thickness		0.0375 in
Flexural Strength	ASTM D790	55,200 psi
Flexural Modulus	ASTM D790	4,370 ksi
Maximum Exposure Temperature		195 °C Continuous Expsoure 220 °C Max Upset Exposure
Minimum Exposure Temperature		-52 °C Continuous Exposure

Product Characteristics

Finish: Gloss Color: Black Density: 1.75 g/mL

CF-500 BD is sold by the yard. Available in 12", 25", 42" widths. Sold FOB Weymouth, MA

Consult Saturating resin and tack coat data sheets for cure data and application information. CF-500 BD is designed to be used exclusively with Advanced FRP Systems epoxy saturating resins. FRP Saturant 200 is recommended for general applications and FRP Saturant 210 HT for elevated temperature applications.

Storage and Shelf Life

CF 500-BD must be stored between 0 - 140 °F. out of direct sunlight. If stored in these conditions the product will have a 5 year shelf life.

Safety Precautions

Please consult up to date SDS's prior to use. An SDS should be available onsite whenever Advanced FRP Products are being used.

Warranty Information

Advanced FRP Systems Inc. warrants that our products are free of manufacturing defects in accordance with applicable Advanced FRP quality control parameters. Liability for products proven defective, if any, is limited to replacement of defective product or refund of purchase price as determined by Advanced FRP Systems. Additional warranties and protection are available. Contact Advanced FRP for more information.

Disclaimer

The information and recommendations set forth upon this data sheet are based on years of laboratory and field analysis. This information provides no performance guarantee and is intended to be used as guidance only as many factor effect the performance of polymeric systems. Actual exposure conditions are the best test of suitability and Advanced FRP Systems will generally provide complementary samples for field testing.

Revision Date: 02/06/2019

ADVANCED FRP SYSTEMS
PROTECT YOUR PROCESS WITH OURS

HP-300 Epoxy

High Performance Epoxy Coating System

Description

Advanced FRP Systems' **HP-300 Epoxy** is a 100% solids, immersion grade epoxy lining system. This specialty lining system combines excellent resistance to a wide range of immersion conditions with an easy to apply, applicator friendly design to provide consistent, long lasting protection.

Product Advantages

- Zero VOC Coating system
- Outstanding adhesion to concrete, steel, masonry, wood and composites
- Highly blush resistant formulation
- Excellent chemical resistance
- Easy to apply, low viscosity epoxy
- Ships DOT Non-Corrosive
- Moisture Tolerant epoxy
- Cures at temperatures as low as 30 °F

Suggested Application

Corrosion resistant epoxy coating system used for water immersion conditions including circulating water lines, tank linings for aqueous chemicals and caustics, secondary containment and aggressive atmospheric corrosion. HP-300 Epoxy is an excellent topcoat for composite systems. Contact Advanced FRP Systems for specific chemical resistance data.

Performance Data

	Test Method	Results
Abrasion Resistance	ASTM D4060; CS17 wheel, 1 Kg	67 mg loss/1000 cycles
Adhesion to Steel	ASTM D4541	>3000 psi
Heat Distortion Temperature	ASTM D648	135 °F
Direct Impact Resistance	ASTM D2794	48 in lbs
Immersion Resistance	Fresh and Salt water; 1 year	No Rust, no blistering, no loss of adhesion
Humidity Resistance	ASTM D4585; 10,000 hours	No Rust, no blistering, no cracking, no loss of adhesion
Dry Heat Resistance	ASTM D2485	250 °F (121 °C)

Product Characteristics

Finish: High Gloss | Colors: Red and Grey | Volume solids: 100%
Mix Ratio (by wt.): 2.6:1 | Mix Ratio (by Vol.): 2:1 | Density: 1.25g/mL
Approximate Coverage: 80 sqft/gallon at 20 mils | Maximum Film Build: 30 mils per coat
Working time: 40 minutes at 75 °F | Application Temperatures: 45 – 105 °F

HP-300 is sold in ½ 1, 2, and 4 gallon units. Other unit sizes may be available upon request.

All products are sold FOB Weymouth, MA

Cure Schedule

	50 °F (10 °C)	75 °F (24 °C)	100 °F (38 °C)
Dry to Touch	14 hours	8 hours	4 hours
Dry to Handle	36 hours	24 hours	12 hours
Overcoat Window	14 – 168 h	8 – 120 h	4 – 72 h
Cures for Service			
Atmospheric	36 hours	24 hours	12 hours
Water Immersion	48 hours	36 hours	24 hours
Full Chemical Resistance	168 hours	120 hours	72 hours

Contact Advanced FRP Systems for Elevated temperature post-cure information. Elevated temperature cures will increase chemical resistance and reduce return to service time.

Application Information

Consult Advanced FRP Application Guidelines Prior to use. This datasheet provides general guidelines for application of HP-300 Epoxy.

Contact Advanced FRP Systems for information on detailed coating specifications specific to your project.

Ensure air and substrate temperatures are between 45-105 °F and relative humidity is below 95%. Follow surface preparation guidelines on pg. 3 prior to applying any coatings.

Pour all of Part A – Hardener into Part B – Base and mix with low speed power agitator for 2-3 minutes. Using a paint stick or spatula, thoroughly scrape sides and bottom of unit. Mix with power mixer for an additional 2 minutes. Do not dilute Advanced FRP products.

HP-300 Epoxy can be applied via brush, roller, conventional airless spray equipment or plural component, airless spray equipment. Consult Advanced FRP Application Guidelines for information on spraying **HP-300 Epoxy**.

Stripe coating of all crevices, weld seems, corners and sharp angles is an essential part of good coating practices and should be done for all immersion services. Heavily pitted areas should be filled with **FRP Repair putty** or other Advanced FRP resurfacing material prior to coating.

HP-300 Epoxy should be applied at 10 – 30 mils per coat in 1 – 3 coats according to the specification for your project. General water immersion requires a minimum of 2 coats at 40 mils DFT. Atmospheric corrosion requires 1 coat at 10-15 mils DFT.

After the coating system has cured, the dry film thickness should be measured by non-destructive dry film thickness gauges to verify minimum application thickness. The coating system should be free of all pinholes and holidays which can be tested through high voltage spark testing. The cured film should be essentially free of runs, sags, inclusions, and other defects. All coating deficiencies should be repaired and allowed to cure prior to return to service.

Surface Preparation

Steel (Immersion Service): Remove all oil and grease from surface with an SSPC SP-1 Solvent Wipe prior to blasting. Check for chlorides on the surface and remove if present with suitable wash. Abrasive Blast to an SSPC SP-10 Near white metal blast with a sharp angular profile of 2 – 3 mils (50 – 75 microns).

Steel (Atmospheric Corrosion): Remove all oil and grease from surface with an SSPC SP-1 Solvent Wipe. Minimum surface preparation of SSPC-SP2 Hand Tool Cleaning must be performed. For enhanced performance, an SSPC-SP6 Commercial Blast Cleaning with an angular surface profile of 1.5+ mils should be used.

Concrete (Immersion/Secondary Containment): Refer to SSPC-SP13/ NACE 6, Section 4.3.1 or ICRI No. 310.2, CSP 1-3 for concrete preparation guidelines. Surface should be thoroughly cleaned and dry. Concrete and mortar must be cured at least 28 days @ 75 °F. Surface must be free of laitance, concrete dust, dirt, form release, curing aids and other foreign material. Advanced FRP's Sealer 200 should be applied prior to coating at 3-5 mils to increase adhesion and reduce outgassing.

Concrete (Atmospheric Corrosion): Refer to SSPC-SP13/ NACE 6, Section 4.3.1 or ICRI No. 310.2, CSP 1-3 for concrete preparation guidelines. Advanced FRP Sealer 200 is not required bur recommended for improved adhesion and aesthetics.

Previously Coated Surfaces: Consult with Advanced FRP to ensure previous coating is compatible. If compatible and previous coating is in good condition, remove all loose coating and foreign materials. Brush blast or grind all glossy areas to a uniform dull finish. Remove dust, oil and debris with SSPC SP 1 Solvent Wipe prior to coating.

Storage and Shelf Life

HP-300 Epoxy must be stored between 45 – 110 °F, out of direct sunlight. If stored in these conditions the product will have a 24 month shelf life.

Safety Precautions

Please consult up to date SDS's prior to use. An SDS should be available onsite whenever Advanced FRP Products are being used.

Warranty Information

Advanced FRP Systems Inc. warrants that our products are free of manufacturing defects in accordance with applicable Advanced FRP quality control parameters. Liability for products proven defective, if any, is limited to replacement of defective product or refund of purchase price as determined by Advanced FRP Systems. Additional warranties and protection are available. Contact Advanced FRP for more information.

Disclaimer

The information and recommendations set forth upon this data sheet are based on years of laboratory and field analysis. This information provides no performance guarantee and is intended to be used as guidance only as many factor effect the performance of polymeric systems. Actual exposure conditions are the best test of suitability and Advanced FRP Systems will generally provide complementary samples for field testing.

Revision Date: 3/2018

FRP Repair Putty

High build, epoxy repair putty

Description

Advanced FRP Systems' **FRP Repair Putty** is a 100% solids, immersion grade epoxy repair putty. This system was engineered to provide excellent adhesion to a wide range of substrates. **FRP Repair Putty** is very applicator friendly with long overcoat windows and a formulation designed not to blush even under extreme conditions. This trowel applied material can hang up to ½ inch without sagging for convenient vertical and overhead applications.

Product Advantages

- Amine Blush resistant formulation
- Outstanding adhesion to concrete, steel, masonry, wood and composites
- Ships DOT Non-Corrosive
- Long overcoat windows
- Zero VOC, 100% Solids system
- Can be applied up to ½ inch thickness
- Cures at temperatures as low as 45 °F

Suggested Application

FRP Repair Putty is an excellent choice for covering weld seems and filling in pits prior to application of a protective coating. It is also used as a build coat between layers of HP-300 for hot water immersion service. **FRP Repair Putty** also recommended for resurfacing substrates prior to application of composite reinforcement systems. Contact Advanced FRP Systems for chemical resistance data.

Performance Data

	Test Method	Results
Adhesion to Concrete	ASTM D4541	>750 psi
Adhesion to Steel	ASTM D4541	>3000 psi
Heat Distortion Temperature	ASTM D648	155 °F
Tensile Strength	ASTM D638	7,600 psi
Tensile Modulus	ASTM D638	398 ksi
Flexural Strength	ASTM D790	13,800 psi
Flexural Modulus	ASTM D790	502 ksi
Compressive Modulus	ASTM D695	455,000 psi

Product Characteristics

Finish: High Gloss
Colors: Light Red
Density: 1.44 g/mL
Mix Ratio (B : A): 1.6 : 1 by Wt. 1.5 : 1 by vol.
VOC: 0%
Approximate Coverage: 20 sqft/gallon at 80 mils
Maximum Thickness: 500 mils
Working time: 35 minutes at 75 °F
Application Temperatures: 45 – 105 °F

FRP Repair Putty is sold in 10 x 1 kg packs and ½ 1, 2 gallon kits.

All Products are sold FOB Weymouth, MA

Cure Schedule

	50 °F (10 °C)	75 °F (24 °C)	100 °F (38 °C)
Dry to Touch	14 hours	8 hours	4 hours
Dry to Handle	36 hours	24 hours	12 hours
Overcoat Window	14 – 168 h	8 – 120 h	4 – 72 h
Cures for Service			
Atmospheric	36 hours	24 hours	12 hours
Water Immersion	48 hours	36 hours	24 hours
Full Chemical Resistance	168 hours	120 hours	72 hours

Contact Advanced FRP Systems for Elevated temperature post-cure information. Elevated temperature cures will increase chemical resistance and reduce return to service time.

Application Information

Consult Advanced FRP Application Guidelines Prior to use. This technical data sheet provides general guidelines for application of ***FRP Repair Putty****.*

Contact Advanced FRP Systems for information on detailed coating specifications specific to your project.

Ensure air and substrate temperatures are between 45-105 °F and relative humidity is below 95%. Follow surface preparation guidelines below prior to coating.

Pour all of Part A – Hardener into Part B – Base and mix with low speed power agitator for 2-3 minutes. Using a paint stick or spatula, thoroughly scrape sides and bottom of unit. Mix with power agitator for an additional 2 minutes. Do not dilute Advanced FRP products.

FRP Repair Putty has the consistency of a thick putty or spackling compound. It should be applied with a trowel, notched trowel, or a plastic applicator.

Stripe coating of all crevices, weld seems, corners and sharp angles is an essential part of good coating practices and should be done for all immersion services. Heavily pitted areas should be filled with **FRP Repair putty** or other Advanced FRP resurfacing material prior to coating.

FRP Repair Putty is designed to be applied up to 500 mils in a single coat. It can be worked into deep pits and gouges, can be used to bury weld seems, and resurface worn or corroded concrete.

After the coating system has cured, the dry film thickness should be measured by non-destructive dry film thickness gauges to verify minimum application thickness. The coating system should be free of all pinholes and holidays which can be tested through high voltage spark testing. The cured film should be essentially free of runs, sags, inclusions, and other defects. All coating deficiencies should be repaired and allowed to cure prior to return to service.

Surface Preparation

Steel (Immersion Service): Remove all oil and grease from surface with an SSPC SP-1 Solvent Wipe prior to blasting. Abrasive Blast to an SSPC SP-10 Near white metal blast with a sharp angular profile of 2 – 3 mils (50 – 75 microns).

Steel (Atmospheric Corrosion): Remove all oil and grease from surface with an SSPC SP-1 Solvent Wipe. Minimum surface preparation of SSPC-SP2 Hand Tool Cleaning must be performed. For enhanced performance, an SSPC-SP6 Commercial Blast Cleaning with an angular surface profile of 1.5+ mils should be used.

Concrete (Immersion/Secondary Containment): Refer to SSPC-SP13/ NACE 6, Section 4.3.1 or ICRI No. 310.2, CSP 1-3 for concrete preparation guidelines. Surface should be thoroughly cleaned and dry. Concrete and mortar must be cured at least 28 days @ 75 °F. Surface must be free of laitance, concrete dust, dirt, form release, curing aids and other foreign material. Advanced FRP's Sealer 200 should be applied prior to coating at 3-5 mils to increase adhesion and reduce outgassing.

Concrete (Atmospheric Corrosion): Refer to SSPC-SP13/ NACE 6, Section 4.3.1 or ICRI No. 310.2, CSP 1-3 for concrete preparation guidelines. Advanced FRP Sealer 200 is not required bur recommended for improved adhesion and aesthetics.

Previously Coated Surfaces: Consult with Advanced FRP to ensure previous coating is compatible. If compatible and previous coating is in good condition, remove all loose coating and foreign materials. Brush blast or grind all glossy areas to a uniform dull finish. Remove dust, oil and debris with SSPC SP 1 Solvent Wipe prior to coating.

Storage and Shelf Life

FRP Repair Putty must be stored between 45 – 110 °F, out of direct sunlight. If stored in these conditions the product will have a 24 month shelf life.

Safety Precautions

Please consult up to date SDS's prior to use. An SDS should be available onsite whenever Advanced FRP Products are being used.

Warranty Information

Advanced FRP Systems Inc. warrants that our products are free of manufacturing defects in accordance with applicable Advanced FRP quality control parameters. Liability for products proven defective, if any, is limited to replacement of defective product or refund of purchase price as determined by Advanced FRP Systems. Additional warranties and protection are available. Contact Advanced FRP for more information.

Disclaimer

The information and recommendations set forth upon this data sheet are based on years of laboratory and field analysis. This information provides no performance guarantee and is intended to be used as guidance only as many factor effect the performance of polymeric systems. Actual exposure conditions are the best test of suitability and Advanced FRP Systems will generally provide complementary samples for field testing.

Revision Date: 3/2018

Saturant 210 HT

High Temperature Composite Saturating Resin

Description

Advanced FRP Systems' **FRP Saturant 210 HT** was engineered for elevated temperature reinforcement with carbon, glass or Kevlar fiber reinforcing fabrics. This zero VOC, epoxy novolac reinforcing resin provides a highly cross-linked polymeric backbone for excellent retention of reinforcing properties at temperatures up to 395 °F. Composites made with **FRP Saturant 210 HT** have excellent chemical, thermal shock and corrosion resistance. Carbon fiber composites provide over 10 times the strength to weight ratio of steel.

Product Advantages

- Zero VOC system
- Outstanding adhesion to concrete, steel, masonry, wood and composites
- Excellent chemical resistance
- Max Operating Temp. 395 °F
- Moisture Tolerant epoxy
- Excellent Thermal Shock resistance
- Low Coefficient of Linear Thermal Expansion

Suggested Application

Used as a high strength saturating resin for Carbon, Glass, or Kevlar fiber reinforcing fabrics. Composite reinforcements are excellent for repairing damaged pipes, rebuilding pressure vessels and tanks, reinforcing concrete, masonry and wood or any application requiring a thin, lightweight structural repair.

Performance Data: (Unreinforced Resin)

	Test Method	Results
Flexural Strength	ASTM D790	19,100 psi
Flexural Modulus	ASTM D790	551 ksi
Tensile Strength	ASTM D638	15,600 psi
Tensile Modulus	ASTM D638	496 ksi
Compressive Strength	ASTM D695	11,900 psi
Adhesion to Concrete	ASTM D4541	>750 psi
Adhesion to Steel	ASTM D4541	3000 psi
Heat Distortion Temperature	ASTM D648	445 °F
Maximum Operating Temp.	N/A	395 °F

Product Characteristics

Finish: High Gloss Color: Clear Volume solids: 100%
Mix Ratio (by wt.): 2.9:1 Mix Ratio (by Vol.): 2.4:1 Density: 1.08 g/mL
Approximate Coverage: 80 sqft/gallon when saturating CF-500 BD
Working time: 50 minutes at 75 °F Application Temperatures: 50 – 195 °F

FRP Saturant 210 HT is sold in ½ 1, 2, and 4 gallon units. Sold FOB Weymouth, MA

Cure Schedule

	50 °F (10 °C)	75 °F (24 °C)	100 °F (38 °C)
Dry to Touch	9 hours	6 hours	3 hours
Dry Hard	24 hours	12 hours	6 hours
Overcoat Window	0 – 168 h	0 – 96 h	0 – 72 h
Cures for Service			
Handling	24 hours	12 hours	6 hours
Return to Service	N/A	48 hours	24 hours
Full Mechanical Strength	N/A	96 hours	72 hours

Contact Advanced FRP Systems for Elevated temperature post-cure information. Elevated temperature cures will increase chemical resistance, raise heat distortion temperature and reduce return to service time.

Application Information

All Advanced FRP Systems composite repairs must be installed by a certified applicator or with direct oversight by Advanced FRP Systems Inc.

Contact Advanced FRP Systems for information on detailed coating specifications specific to your project.

Ensure air and substrate temperatures are between 50 - 195 °F and relative humidity is below 85%. Application above 105 °F requires high temperature procedures. Follow surface preparation guidelines below prior to coating.

Prior to applying composite reinforcement, the surface to be reinforced must be smooth and free of pits, voids, or other imperfections. Repair and rebuild damaged substrates with Advanced FRP Repair Putty or FRP Tack Coat 110 HT.

Pour all of Part A – Hardener into Part B – Base and mix with low speed power agitator for 2-3 minutes. Using a paint stick or spatula, thoroughly scrape sides and bottom of unit. Mix with power mixer for an additional 2 minutes. Do not dilute Advanced FRP products.

Ensure surface is properly prepared and vertical and overhead areas have Tack Coat 110 HT applied as directed.

Hand Saturation: Pre-saturate the reinforcing fabric by rolling it out onto a saturation table, then pouring the mixed 210 HT directly onto the fabric. The liquid should be moved around the fabric until the entire surface is visibly saturated. Repeat a second time to ensure 100% saturation of the fabric prior to installation.

Saturation Machine: Saturation machine shall not be used by a contractor that has not been trained in its proper use by Advanced FRP Systems. The saturation machine can only be used for fabrics up to 25 inches in width. Larger width fabrics must be hand saturated. Contact Advanced FRP Systems for information on technical oversight and use of saturation machine.

Surface Preparation

Steel (Immersion Service): Remove all oil and grease from surface with an SSPC SP-1 Solvent Wipe prior to blasting. Abrasive Blast to an SSPC SP-10 Near white metal blast with a sharp angular profile of 2 – 3 mils (50 – 75 microns).

Steel (Atmospheric Corrosion): Remove all oil and grease from surface with an SSPC SP-1 Solvent Wipe. Minimum surface preparation of SSPC-SP2 Hand Tool Cleaning must be performed. For enhanced performance, an SSPC-SP6 Commercial Blast Cleaning with an angular surface profile of 1.5+ mils should be used.

Concrete (Immersion/Secondary Containment): Refer to SSPC-SP13/ NACE 6, Section 4.3.1 or ICRI No. 310.2, CSP 1-3 for concrete preparation guidelines. Surface should be thoroughly cleaned and dry. Concrete and mortar must be cured at least 28 days @ 75 °F. Surface must be free of laitance, concrete dust, dirt, form release, curing aids and other foreign material. Advanced FRP's Sealer 200 should be applied prior to coating at 3-5 mils to increase adhesion and reduce outgassing.

Concrete (Atmospheric Corrosion): Refer to SSPC-SP13/ NACE 6, Section 4.3.1 or ICRI No. 310.2, CSP 1-3 for concrete preparation guidelines. Advanced FRP Sealer 200 is not required bur recommended for improved adhesion and aesthetics.

Previously Coated Surfaces: Consult with Advanced FRP to ensure previous coating is compatible. If compatible and previous coating is in good condition, remove all loose coating and foreign materials. Brush blast or grind all glossy areas to a uniform dull finish. Remove dust, oil and debris with SSPC SP 1 Solvent Wipe prior to coating.

Storage and Shelf Life

FRP Saturant 210 HT must be stored between 40 – 125 °F, out of direct sunlight. If stored in these conditions the product will have a 24 month shelf life.

Safety Precautions

Please consult up to date SDS's prior to use. An SDS should be available onsite whenever Advanced FRP Products are being used.

Warranty Information

Advanced FRP Systems Inc. warrants that our products are free of manufacturing defects in accordance with applicable Advanced FRP quality control parameters. Liability for products proven defective, if any, is limited to replacement of defective product or refund of purchase price as determined by Advanced FRP Systems. Additional warranties and protection are available. Contact Advanced FRP for more information.

Disclaimer

The information and recommendations set forth upon this data sheet are based on years of laboratory and field analysis. This information is intended to be used as guidance only as many factor effect the performance of polymeric systems. Actual exposure conditions are the best test of suitability and Advanced FRP Systems will generally provide complementary samples for field testing.

Revision Date: 12/2018

SAFETY DATA SHEET

SECTION 1. IDENTIFICATION OF THE SUBSTANCE AND COMPANY

Product Name: CF-500 BD

Product Classification: Composite Reinforcing Fabric

Manufactured By: Adavnced FRP Systems Inc.
106 Finnell Dr.
Units 13/14
Weymouth, MA 02188
(508) 927-6915

In case of emergency contact: Chem-Tel 800-255-3924

Prepared by: Russell Giudici **Revision Date:** 06/2018

SECTION 2. IDENTIFICATION OF HAZARDS

GHS Classification in accordance with 29 CFR 1910.1200 (OSHA HCS)

None

GHS Label Elements, Including precautionary statements

Pictogram: None

Signal Word: None

Hazard determining component(s):
None

Hazard Statements
None

Precautionary Statements
None

Hazards not otherwise classified (HNOC) or not covered by GHS:

Adverse Human Health Effects
Acute Toxic Substance: No case of disease, which is caused by Carbon Fiber, has been reported. Short fiber, for Example, particles or fly, can cause transient skin irritation.

Environmental Effects
Carbon Fiber is electrically conductive, and it can cause the short-circuiting of electrical equipment. Airborne Carbon Fiber can also disturb electrical equipment.

SECTION 3. COMPOSITION/INFORMATION ON INGREDIENTS

Chemical Name	CAS #	Classification	Concentration
Carbon Fiber	7440-44-0	None	95 – 100%

SECTION 4. FIRST AID MEASURES

Inhalation: Remove person to fresh air. If signs or symptoms continue seek medical attention.

SAFETY DATA SHEET

Skin Contact:	Wash off with soap and water. If the chemical has penetrated clothing, remove clothing and was with soap and water.
Eye Contact:	Immediately wash the eyes with plenty of water. If irritation persists, seek medical attention.
Ingestion:	Do not induce vomiting. Consult a physician if necessary.

SECTION 5. FIRE-FIGHTING MEASURES

Extinguishing media:	Use dry chemicals, CO2, water spray or foam. Move containers from fire area if you can without risk. Runoff from fire control may cause pollution. Dike water for later disposal.
Special Hazards:	Material may burn but does not ignite readily. Fire may produce irritating, corrosive, and/or toxic gases.
Additional Measures:	Cool closed containers by spraying with water. Do not allow water run off to enter drains or waterways.

SECTION 6. ACCIDENTAL RELEASE MEASURES

ELIMINATE ALL IGNITION SOURCES (no smoking, flares, sparks or flames in immediate area). Do not touch or walk through spilled material. Stop leak if you can do so without risk. Prevent entry into waterways, sewers, basements or confined areas. Absorb or cover with dry earth, sand, or other non-combustible material and transfer to containers. LARGE SPILLS: Dike far ahead of liquid spill to contain released material and runoff from fire control.

Environmental precautions
Do not allow spills to enter drains or watercourses.

Methods and material for containment and cleaning up
Isolate spill or leak area immediately for at least 25 to 50 meters (80 to 160 feet) in all directions. Keep unauthorized personnel away. Stay upwind. Keep out of low areas. Ventilate closed spaces before entering.

SECTION 7. HANDLING AND STORAGE

Store all materials between 40 – 100 °F. Ensure storage area is well ventilated and free from all sources of ignition. Wash hands thoroughly after use. Immediately clean up any spills and keep containers tightly closed when not in use.

SECTION 8. EXPOSURE CONTROL AND PERSONAL PROTECTION

Control Parameters

Component	CAS Number	Value	Control Parameter	Basis
Carbon Fiber	7440-44-0	TWA	2.00 mg/m^3	USA. Workplace Environmental Exposure Levels (WEEL)

Exposure Control
Respiratory: Select equipment to provide protection from the ingredients listed in Section 3 of this document. Ensure fresh air entry during application and drying. If you experience eye watering, headache or dizziness or if air monitoring demonstrates dust, vapor, or mist levels are above applicable limits, wear an appropriate, properly fitted respirator (NIOSH approved) during and after application. Follow respirator manufacturer's directions for respirator use.

Eyes: Avoid contact with eyes. Protective equipment should be selected to provide protection from exposure to the chemicals listed in Section 3 of this document. Depending on the site-specific conditions of use, safety glasses,

□

SAFETY DATA SHEET

chemical goggles, and/or head and face protection may be required to prevent contact. The equipment must be thoroughly cleaned, or discarded after each use.

Skin: Protective equipment should be selected to provide protection from exposure to the chemicals listed in Section 3 of this document. Depending on the site-specific conditions of use, protective gloves, apron, boots, head and face protection may be required to prevent contact. The equipment must be thoroughly cleaned, or discarded after each use.

Engineering Controls: Depending on the site-specific conditions of use, provide adequate ventilation.

Other Work Practices
NCA019_A1
Emergency eye wash fountains and safety showers should be available in the immediate vicinity of any potential exposure. Use good personal hygiene practices. Wash hands before eating, drinking, using toilet facilities, etc. Promptly remove soiled clothing and wash clothing thoroughly before reuse. Shower after work using plenty of soap and water.

SECTION 9. PHYSICAL AND CHEMICAL PROPERTIES

Appearance	Black solid Fabric
Flammability of Explosive Limit	
Upper	Not applicable
Lower	Not applicable
Odor	no odor
Vapor Pressure	0 mmHg at 70 °F
Odor Threshold	No data available
Vapor Density	No data available
pH	Unknown
Relative Density	1.75 g/mL
Melting Point/Freezing Point	< 0 °F
Solubility in water	Not soluble
Initial Boiling Point	>1,000 °F
Boiling Range	No data available
Flash Point	No data available
Evaporation Rate	Not applicable
Flammability	Not flammable
Partition Coefficient: n-octanol/water	Not soluble
Auto Ignition Temperature	Not applicable
Decomposition Temperature	>500 °F
Viscosity	Not Applicable
% Volatile Content by Weight:	0%
VOC Content	0 g/L

SECTION 10. STABILITY AND REACTIVITY

Reactivity: None

Chemical stability: This product is stable and hazardous polymerization will not occur. Not sensitive to mechanical impact.

Possibility of hazardous reactions: None

Incompatible materials: None

Hazardous decomposition products: None

SAFETY DATA SHEET

SECTION 11. TOXICOLOGICAL INFORMATION

Ingredient	Oral LD50, mg/kg	Skin LD50, mg/kg	Inhalation (vapor) LD50, mg/L/4h	Inhalation (dust/mist) LD50, mg/L/4h
No data available				

Specific Target Organ Toxicity – Single exposure (STOT-se): Product not classified based on available data
Specific Target Organ Toxicity – repeated exposure (STOT-re): Product not classified based on available data

Chronic Health Effects: None

SECTION 12. ECOLOGICAL INFORMATION

Toxicity: No additional information is available on this product. See Section 3 for chemical specific breakdown of toxicity.

Aquatic Ecotoxicity

Ingredient	96h LC50 fish, mg/L	48h EC50 crustacea, mg/L	ErC50 algae, mg/L
No data available			

General effect: None

Persistence and degradability: Not readily biodegradable

Bioaccumulation potential: Not measured

Mobility in Soil: No data available

Results of PBT and vPvB Assessment: This product contains no PBT/vPvB chemicals.

Other Adverse Effects: None

SECTION 13. DISPOSAL CONSIDERATIONS

Waste Treatment Method: Dispose of in accordance with local, state and federal regulations.

SECTION 14. TRANSPORT INFORMATION

DOT (Domestic Surface Transportation)

DOT Proper Shipping Name:	Not Regulated
DOT Hazard Class:	Not Regulated
UN/NA Number:	Not Regulated
DOT Packaging Group:	Not Regulated
CERCLA/DOT RQ	Not Applicable

IMO/IMDG (Ocean Transport)

IMDG Proper Shipping Name:	Not Regulated
IMDG Hazard Class:	Not Regulated

□

SAFETY DATA SHEET

Sub Class:	Not Applicable
IMDG Packaging Group:	Not Regulated
System Reference Code:	Not Regulated

ICAO/IATA (Air Transport) : Not Regulated
Packaging Group: N/A

Environmental Hazards
None

SECTION 15. REGULATORY INFORMATION

SARA 302 Components
No chemicals in this material are subject to the reporting requirements of SARA Title III, Sec. 302.
SARA 313 Components
This material does not contain any chemical components with known CAS numbers that exceed the threshold (De Minimis) reporting levels established by SARA Title III, Sec. 313.
SARA 311/312 Hazards
None

Massachusetts Right to Know Components

	CAS #	Revision Date
None		

Pennsylvania Right to Know Components

	CAS #	Revision Date
None		

New Jersey Right to Know Components

	CAS #	Revision Date
None		

California Prop. 65 Components
This product does not contain any substances known by the state of California to cause cancer.

Canadian Regulations: WHMIS Hazard Class: None
All components of this product are on the Canadian Domestic Substances List.

SECTION 16. OTHER INFORMATION

HMIS RATINGS

HEALTH:	1
FLAMMABLITY:	0
REACTIVITY:	0
PERSONAL PROTECTION:	B

The information and recommendations contained herein are based upon data believed to be correct. However, no guarantee or warranty of any kind, expressed or implied, is made with respect to the information contained within this SDS. We accept no responsibility and disclaim all liability for any harmful effects which may be caused by exposure to our products. Customer/users of this product must comply with all applicable health and safety laws, regulations and orders.

□

□□□□□□□□□0□□

□□□□□□□□□□□□□□□0□0□

□□□□□□

SAFETY DATA SHEET

SECTION 1. IDENTIFICATION OF THE SUBSTANCE AND COMPANY

Product Name: FRP 120 HT – High Strength Adhesive - Base

Product Classification: Paint/Coating

Manufactured By: Adavnced FRP Systems Inc.
106 Finnell Dr. Units 13/14
Weymouth, MA 02188
(508) 927-6915

In case of emergency contact: Chem-Tel 800-255-3924

Prepared by: Russell Giudici **Revision Date:** 5/2018

SECTION 2. IDENTIFICATION OF HAZARDS

GHS Classification in accordance with 29 CFR 1910.1200 (OSHA HCS)

Acute Toxicity, Oral (Category 4), H302
Acute Toxicity, Dermal (Category 4), H312
Skin Irritant (category 2), H315
Skin Sensitizer (Category 1), H317
Eye Irritant (Category 2A), H319
Acute Toxicity, Inhalation (Category 4), H332
Reproductive Toxicity (Category 1B), H360
Acute Aquatic Toxicity (Category 3), H402
Chronic Aquatic Toxicity (Category 3), H412

GHS Label Elements, Including precautionary statements

Pictogram



Signal Word: WARNING

Hazard determining component(s):
Bisphenol A epoxy resin
Butanedioldiglycidyl ether
1-Methoxy-2-propanol acetate

Hazard Statements	
H302+H312+H332	Harmful if swallowed, in contact with skin or if inhaled
H315	Causes skin irritation
H317	May cause allergic skin reaction
H319	Causes serious eye irritation
H360	May damage fertility of the unborn child
H 412	Harmful to aquatic life with long lasting effects

SAFETY DATA SHEET

ADVANCED FRP SYSTEMS

Precautionary Statements

P261	Avoid breading dust/fume/gas/mist/vapors/spray.
P264	Wash skin thoroughly after using this product.
P270	Do not eat, drink, or smoke when using this product
P271	Use only outdoors or in well ventilated areas
P272	Contaminated work clothes should not be allowed out of the workplace
P273	Avoid release into the environment
P280	Wear protective gloves/protective clothing/eye protection/face protection
P301+P312	IF SWALLOWED: Call a POISON CENTER or doctor/physician if feeling unwell.
P303+P361+P353	IF ON SKIN: Remove/take off immediately all contaminated clothing. Rinse skin with water/shower.
P304+P340+P312	IF INHALED: Remove person to fresh air and keep comfortable for breathing. Call a POISON CENTER or doctor/physician if you feel unwell.
P305+P351+P338	IF IN EYES: Rinse cautiously with water for several minutes. Remove contact lenses if present and continue rinsing.
P333+P313	If skin irritation or rash occurs, Get medical advice/attention.
P362	Take off contaminated clothes and wash before reuse.
P370+P378	In case of fire use dry sand, dry chemicals or alcohol resistant foam for extinguishing.
P501	Dispose of contents/containers in accordance with local/regional/national/international regulations.

Hazards not otherwise classified (HNOC) or not covered by GHS

None

SECTION 3. COMPOSITION/INFORMATION ON INGREDIENTS

Chemical Name	CAS #	Classification	Concentration
Bisphenol A Epoxy Resin	25068-38-6	Skin Irrit. 2; Skin Sens. 1; Eye Irrit. 2; H315, H317, H319	60 - 90%
Butanedioldiglycidyl ether	2425-79-8	Acute Tox. 4; Skin Irrit. 2; Eye Irrit. 2A Skin Sens. 1; Aquatic Acute 3; Aquatic Chronic 3; H302, H312, H315, H317 H319, H412	10 - 40%
1-methoxy-2-propanol acetate	108-65-6	Flam Liq. 3; Rep. Tox. 1B; H226; H360	<0.6%

SECTION 4. FIRST AID MEASURES

Inhalation: Remove person to fresh air. If signs or symptoms continue seek medical attention.

Skin Contact: Wash off with soap and water. If the chemical has penetrated clothing, remove clothing and was with soap and water.

Eye Contact: Immediately wash the eyes with plenty of water. If irritation persists, seek medical attention.

Ingestion: Do not induce vomiting. Consult a physician if necessary.

SECTION 5. FIRE-FIGHTING MEASURES

Extinguishing media: Use dry chemicals, CO2, water spray or foam. Move containers from fire area if you can without risk. Runoff from fire control may cause pollution. Dike water for later disposal.

SAFETY DATA SHEET

Special Hazards:	Material may burn but does not ignite readily. Fire may produce irritating, corrosive, and/or toxic gases.
Additional Measures:	Cool closed containers by spraying with water. Do not allow water run off to enter drains or waterways.

SECTION 6. ACCIDENTAL RELEASE MEASURES

ELIMINATE ALL IGNITION SOURCES (no smoking, flares, sparks or flames in immediate area). Do not touch or walk through spilled material. Stop leak if you can do so without risk. Prevent entry into waterways, sewers, basements or confined areas. Absorb or cover with dry earth, sand, or other non-combustible material and transfer to containers. LARGE SPILLS: Dike far ahead of liquid spill to contain released material and runoff from fire control.

Environmental precautions
Do not allow spills to enter drains or watercourses.

Methods and material for containment and cleaning up
Isolate spill or leak area immediately for at least 25 to 50 meters (80 to 160 feet) in all directions. Keep unauthorized personnel away. Stay upwind. Keep out of low areas. Ventilate closed spaces before entering.

SECTION 7. HANDLING AND STORAGE

Store all materials between 40 – 100 °F. Ensure storage area is well ventilated and free from all sources of ignition. Wash hands thoroughly after use. Immediately clean up any spills and keep containers tightly closed when not in use.

SECTION 8. EXPOSURE CONTROL AND PERSONAL PROTECTION

Control Parameters

Component	CAS Number	Value	Control Parameter	Basis
1-methoxy-2-proanol acetate	108-65-6	TWA	50 ppm	US WEEL

Exposure Control
Respiratory: Select equipment to provide protection from the ingredients listed in Section 3 of this document. Ensure fresh air entry during application and drying. If you experience eye watering, headache or dizziness or if air monitoring demonstrates dust, vapor, or mist levels are above applicable limits, wear an appropriate, properly fitted respirator (NIOSH approved) during and after application. Follow respirator manufacturer's directions for respirator use.

Eyes: Avoid contact with eyes. Protective equipment should be selected to provide protection from exposure to the chemicals listed in Section 3 of this document. Depending on the site-specific conditions of use, safety glasses, chemical goggles, and/or head and face protection may be required to prevent contact. The equipment must be thoroughly cleaned, or discarded after each use.

Skin: Protective equipment should be selected to provide protection from exposure to the chemicals listed in Section 3 of this document. Depending on the site-specific conditions of use, protective gloves, apron, boots, head and face protection may be required to prevent contact. The equipment must be thoroughly cleaned, or discarded after each use.

Engineering Controls: Depending on the site-specific conditions of use, provide adequate ventilation.

SAFETY DATA SHEET

Other Work Practices
NCA019_A1
Emergency eye wash fountains and safety showers should be available in the immediate vicinity of any potential exposure. Use good personal hygiene practices. Wash hands before eating, drinking, using toilet facilities, etc. Promptly remove soiled clothing and wash clothing thoroughly before reuse. Shower after work using plenty of soap and water.

SECTION 9. PHYSICAL AND CHEMICAL PROPERTIES

Appearance	Amber liquid
Flammability of Explosive Limit	
Upper	No data available
Lower	No data available
Odor	faint chemical odor
Vapor Pressure	10 mmHg at 70 °F
Odor Threshold	No data available
Vapor Density	No data available
pH	Unknown
Relative Density	1.16 g/mL
Melting Point/Freezing Point	< 0 °F
Solubility in water	Negligible
Initial Boiling Point	284 °F
Boiling Range	284 °F – 511 °F
Flash Point	284 °F
Evaporation Rate	No data available
Flammability	No data available
Partition Coefficient: n-octanol/water	No data available
Auto Ignition Temperature	No applicable
Decomposition Temperature	>500 °F
Viscosity	900 cps
% Volatile Content by Weight:	<0.2%
VOC Content	0 g/L

SECTION 10. STABILITY AND REACTIVITY

Reactivity: Avoid contact with strong mineral or Lewis acids as rapid polymerization can result. Also avoid strong oxidizing agents.

Chemical stability: This product is stable and hazardous polymerization will not occur. Not sensitive to mechanical impact. Excessive heat and fumes generation can occur if improperly handled.

Possibility of hazardous reactions: Avoid incompatible materials listed below.

Incompatible materials: Strong oxidizing agents. Strong mineral or Lewis acids.

Hazardous decomposition products: Heat is generated when the Base and Activator are mixed. Uncontrolled curing of large masses may cause the material to char or catch fire. Material may burn but does not ignite readily. Fire may produce irritating, corrosive and/or toxic gases. Sealed containers may explode when heated.

SECTION 11. TOXICOLOGICAL INFORMATION

Ingredient	Oral LD50, mg/kg	Skin LD50, mg/kg	Inhalation (vapor) LD50, mg/L/4h	Inhalation (dust/mist) LD50, mg/L/4h

□

Bisphenol A Epoxy Resin	>5,000	>6,000	>3,466	No Data
Butanedioldiglycidyl ether	1,118	>1,250	No Data	No Data

Specific Target Organ Toxicity – Single exposure (STOT-se): Product not classified based on available data
Specific Target Organ Toxicity – repeated exposure (STOT-re): Product not classified based on available data

Chronic Health Effects: Skin sensitizer; once sensitized, a severe allergic reaction may occur when subsequently exposed.

Carcinogen Categories:
National Toxicology Program (NTP): No ingredients are listed
International Agency for Research on Cancer (IARC): No ingredients are listed
Occupational Safety and Health Administration (OHSA): No ingredients are listed

SECTION 12. ECOLOGICAL INFORMATION

Toxicity: No additional information is available on this product. See Section 3 for chemical specific breakdown of toxicity.

Aquatic Ecotoxicity

Ingredient	96h LC50 fish, mg/L	48h EC50 crustacea, mg/L	ErC50 algae, mg/L
Bisphenol A Epoxy Resin	1.5 (Rainbow Trout)	3.6 (Daphnia)	No data
Butanedioldigylcidyl ether	24 (Zebra Fish)	75 (Daphnia)	72 (algae)

Persistence and degradability: ~13% based on modified Stern Method, not readily biodegradable

Bioaccumulation potential: Not measured

Mobility in Soil: No data available

Results of PBT and vPvB Assessment: This product contains no PBT/vPvB chemicals.

Other Adverse Effects: Harmful to aquatic life with long lasting effects.

SECTION 13. DISPOSAL CONSIDERATIONS

Waste Treatment Method: Do not allow spills to enter into drains or waterways. Dispose of in accordance with local, state and federal regulations. Part A and B can be mixed together and allowed to cure to form an inert solid to facilitate easy disposal.

SECTION 14. TRANSPORT INFORMATION

DOT (Domestic Surface Transportation)
DOT Proper Shipping Name: Not Regulated
DOT Hazard Class: Not Regulated
UN/NA Number: Not Regulated
DOT Packaging Group: Not Regulated
CERCLA/DOT RQ Not Applicable

□

□

SAFETY DATA SHEET



IMO/IMDG (Ocean Transport)

IMDG Proper Shipping Name:	Not Regulated
IMDG Hazard Class:	Not Regulated
Sub Class:	Not Applicable
IMDG Packaging Group:	Not Regulated
System Reference Code:	9

Environmental Hazards
Marine Pollutant (Bisphenol A Epoxy Resin)

SECTION 15. REGULATORY INFORMATION

SARA 302 Components
No chemicals in this material are subject to the reporting requirements of SARA Title III, Sec. 302.
SARA 313 Components
This material does not contain any chemical components with known CAS numbers that exceed the threshold (De Minimis) reporting levels established by SARA Title III, Sec. 313.
SARA 311/312 Hazards
Chronic Health Hazard
Massachusetts Right to Know Components

	CAS #	Revision Date
None		

Pennsylvania Right to Know Components

	CAS #	Revision Date
Butanedioldigylcidyl ether	2425-79-8	
1-Methoxy-2-propanol acetate	108-65-6	

New Jersey Right to Know Components

	CAS #	Revision Date
Butanedioldigylcidyl ether	2425-79-8	
1-Methoxy-2-propanol acetate	108-65-6	

California Prop. 65 Components
This product does not contain any chemicals known to the State of California to cause cancer, birth defects or any other reproductive harm.

Canadian Regulations: WHMIS Hazard Class: D2B - Toxic material causing other toxic effects,
All components of this product are on the Canadian Domestic Substances List.

SECTION 16. OTHER INFORMATION

HMIS RATINGS

HEALTH:	3
FLAMMABLITY:	1
REACTIVITY:	0
PERSONAL PROTECTION:	B

The information and recommendations contained herein are based upon data believed to be correct. However, no guarantee or warranty of any kind, expressed or implied, is made with respect to the information contained within this SDS. We accept no responsibility and disclaim all liability for any harmful effects which may be caused by exposure to our products. Customer/users of this product must comply with all applicable health and safety laws, regulations and orders.

SAFETY DATA SHEET

SECTION 1. IDENTIFICATION OF THE SUBSTANCE AND COMPANY

Product Name: FRP 120 HT – High Strength Tack Coat - Hardener

Product Classification: Paint/Coating

Manufactured By: Adavnced FRP Systems Inc.
106 Finnell Dr. Units 13/14
Weymouth, MA 02188
(508) 927-6915

In case of emergency contact: Chem-Tel 800-255-3924

Prepared by: Russell Giudici **Revision Date:** 5/2018

SECTION 2. IDENTIFICATION OF HAZARDS

GHS Classification in accordance with 29 CFR 1910.1200 (OSHA HCS)

Combustible Liquid (Category 3), H227
Skin Corrosive (category 1A), H314
Skin Sensitizer (Category 1), H317

GHS Label Elements, Including precautionary statements

Pictogram



Signal Word: DANGER

Hazard determining component(s):
1,3-Cyclohexanedimethanamine
3-aminopropyldimethylamine

Hazard Statements

H227	Combustible Liquid
H314	Causes severe skin burns and eye damage
H317	May cause allergic skin reaction

Precautionary Statements

P101	If medical advice is needed, have product container or label on hand
P102	Keep out of reach of children
P103	Read label before use
P210	Keep away from heat/sparks/open flames/hot surfaces. –No smoking.
P260	Do not breathe dust/fume/gas/mist/vapors/spray.
P303+P361+P353	IF ON SKIN: Remove/take off immediately all contaminated clothing. Rinse skin with water/shower.
P305+P351+P338	IF IN EYES: Rinse cautiously with water for several minutes. Remove contact lenses if present and continue rinsing.
P405	Store locked up.

SAFETY DATA SHEET



P501 Dispose of contents/containers in accordance with local/regional/national/international regulations.

Hazards not otherwise classified (HNOC) or not covered by GHS
None

SECTION 3. COMPOSITION/INFORMATION ON HAZARDOUS INGREDIENTS

Chemical Name	CAS #	Classification	Concentration
1,3-cyclohexane-dimethanamine	2579-20-6	Acute Tox. 4; Skin Corr. 1A; Acute Tox. 4; H302, H312, H314	5.0 – 9.0%
3-aminopropyldimethylamine	109-55-7	Flam. Liq 3; Acute Tox. 4; Skin Cor. 1B, Skin Sens. 1; H226, H302, H314, H317	3.0 – 8.0%
Salicylic Acid	69-72-7	Acute tox. 4; Skin Irrit. 3; Eye Dam. 1; H302, H316, H318	1.0 – 3.0%

SECTION 4. FIRST AID MEASURES

Inhalation: Remove person to fresh air. If signs or symptoms continue seek medical attention.

Skin Contact: Wash off with soap and water. If the chemical has penetrated clothing, remove clothing and was with soap and water.

Eye Contact: Immediately wash the eyes with plenty of water. If irritation persists, seek medical attention.

Ingestion: Do not induce vomiting. Consult a physician if necessary.

SECTION 5. FIRE-FIGHTING MEASURES

Extinguishing media: Use dry chemicals, CO2, water spray or foam. Move containers from fire area if you can without risk. Runoff from fire control may cause pollution. Dike water for later disposal.

Special Hazards: Material may burn but does not ignite readily. Fire may produce irritating, corrosive, and/or toxic gases.

Additional Measures: Cool closed containers by spraying with water. Do not allow water run off to enter drains or waterways.

SECTION 6. ACCIDENTAL RELEASE MEASURES

ELIMINATE ALL IGNITION SOURCES (no smoking, flares, sparks or flames in immediate area). Do not touch or walk through spilled material. Stop leak if you can do so without risk. Prevent entry into waterways, sewers, basements or confined areas. Absorb or cover with dry earth, sand, or other non-combustible material and transfer to containers. LARGE SPILLS: Dike far ahead of liquid spill to contain released material and runoff from fire control.

Environmental precautions
Do not allow spills to enter drains or watercourses.

Methods and material for containment and cleaning up
Isolate spill or leak area immediately for at least 25 to 50 meters (80 to 160 feet) in all directions. Keep unauthorized personnel away. Stay upwind. Keep out of low areas. Ventilate closed spaces before entering.

□

SAFETY DATA SHEET

ADVANCED FRP SYSTEMS

SECTION 7. HANDLING AND STORAGE

Store all materials between 40 – 100 °F. Ensure storage area is well ventilated and free from all sources of ignition. Wash hands thoroughly after use. Immediately clean up any spills and keep containers tightly closed when not in use.

SECTION 8. EXPOSURE CONTROL AND PERSONAL PROTECTION

Control Parameters

Component	CAS Number	Value	Control Parameter	Basis

Exposure Control

Respiratory: Select equipment to provide protection from the ingredients listed in Section 3 of this document. Ensure fresh air entry during application and drying. If you experience eye watering, headache or dizziness or if air monitoring demonstrates dust, vapor, or mist levels are above applicable limits, wear an appropriate, properly fitted respirator (NIOSH approved) during and after application. Follow respirator manufacturer's directions for respirator use.

Eyes: Avoid contact with eyes. Protective equipment should be selected to provide protection from exposure to the chemicals listed in Section 3 of this document. Depending on the site-specific conditions of use, safety glasses, chemical goggles, and/or head and face protection may be required to prevent contact. The equipment must be thoroughly cleaned, or discarded after each use.

Skin: Protective equipment should be selected to provide protection from exposure to the chemicals listed in Section 3 of this document. Depending on the site-specific conditions of use, protective gloves, apron, boots, head and face protection may be required to prevent contact. The equipment must be thoroughly cleaned, or discarded after each use.

Engineering Controls: Depending on the site-specific conditions of use, provide adequate ventilation.

Other Work Practices

NCA019_A1

Emergency eye wash fountains and safety showers should be available in the immediate vicinity of any potential exposure. Use good personal hygiene practices. Wash hands before eating, drinking, using toilet facilities, etc. Promptly remove soiled clothing and wash clothing thoroughly before reuse. Shower after work using plenty of soap and water.

SECTION 9. PHYSICAL AND CHEMICAL PROPERTIES

Appearance	Yellow liquid
Flammability of Explosive Limit	
Upper	No data available
Lower	No data available
Odor	Ammonia odor
Vapor Pressure	No data available
Odor Threshold	No data available
Vapor Density	No data available
pH	Unknown
Relative Density	0.953 g/mL
Melting Point/Freezing Point	< 0 °F
Solubility in water	Not soluble
Initial Boiling Point	>230 °F
Boiling Range	No data available
Flash Point	>230 °F
Evaporation Rate	<1 (Butyl acetate = 1)

SAFETY DATA SHEET



Flammability	No data available
Partition Coefficient: n-octanol/water	No data available
Auto Ignition Temperature	Product does not self-ignite
Decomposition Temperature	>450 °F
Viscosity	70 cps
% Volatile Content by Weight:	<0.2%
VOC Content	0 g/L

SECTION 10. STABILITY AND REACTIVITY

Reactivity: Avoid contact with strong mineral or Lewis acids as rapid polymerization can result. Also avoid strong oxidizing agents.

Chemical stability: This product is stable and hazardous polymerization will not occur. Not sensitive to mechanical impact. Excessive heat and fumes generation can occur if improperly handled.

Possibility of hazardous reactions: Avoid incompatible materials listed below.

Incompatible materials: Strong oxidizing agents. Strong mineral or Lewis acids.

Hazardous decomposition products: Heat is generated when the Base and Activator are mixed. Uncontrolled curing of large masses may cause the material to char or catch fire. Material may burn but does not ignite readily. Fire may produce irritating, corrosive and/or toxic gases. Sealed containers may explode when heated.

SECTION 11. TOXICOLOGICAL INFORMATION

Ingredient	Oral LD50, mg/kg	Skin LD50, mg/kg	Inhalation (vapor) LD50, mg/L/4h	Inhalation (dust/mist) LD50, mg/L/4h
Product	1870 (rat)	490 (rabbit)	2.4 (rat)	No data

Specific Target Organ Toxicity – Single exposure (STOT-se): Product not classified based on available data
Specific Target Organ Toxicity – repeated exposure (STOT-re): Product not classified based on available data

Chronic Health Effects: Skin sensitizer; once sensitized, a severe allergic reaction may occur when subsequently exposed. After repeated high-dose oral exposure the substance causes adverse effects to the liver and kidneys.

Carcinogen Categories:
National Toxicology Program (NTP): No ingredients are listed
International Agency for Research on Cancer (IARC): No ingredients are listed
Occupational Safety and Health Administration (OHSA): No ingredients are listed

SECTION 12. ECOLOGICAL INFORMATION

Toxicity: No additional information is available on this product. See Section 3 for chemical specific breakdown of toxicity.

Aquatic Ecotoxicity

Ingredient	96h LC50 fish, mg/L	48h EC50 crustacea, mg/L	ErC50 algae, mg/L

□

SAFETY DATA SHEET

General effect: Water hazard Class 2: hazardous for water. Do not allow product to reach ground water, water course or sewage system.

Persistence and degradability: Not readily biodegradable

Bioaccumulation potential: Not measured

Mobility in Soil: No data available

Results of PBT and vPvB Assessment: This product contains no PBT/vPvB chemicals.

Other Adverse Effects: No further relevant information

SECTION 13. DISPOSAL CONSIDERATIONS

Waste Treatment Method: Do not allow spills to enter into drains or waterways. Do not dispose of with household trash. Dispose of in accordance with local, state and federal regulations. Part A and B can be mixed together and allowed to cure to form an inert solid to facilitate easy disposal.

SECTION 14. TRANSPORT INFORMATION

SECTION 14. TRANSPORT INFORMATION

DOT (Domestic Surface Transportation)

DOT Proper Shipping Name:	Not Regulated
DOT Hazard Class:	Not Regulated
UN/NA Number:	Not Regulated
DOT Packaging Group:	Not Regulated
CERCLA/DOT RQ	Not Applicable

IMO/IMDG (Ocean Transport)

IMDG Proper Shipping Name:	Not Regulated
IMDG Hazard Class:	Not Regulated
Sub Class:	Not Applicable
IMDG Packaging Group:	Not Regulated
System Reference Code:	Not Regulated

Environmental Hazards
None

SECTION 15. REGULATORY INFORMATION

SARA 302 Components
No chemicals in this material are subject to the reporting requirements of SARA Title III, Sec. 302.
SARA 313 Components
This material does not contain any chemical components with known CAS numbers that exceed the threshold (De Minimis) reporting levels established by SARA Title III, Sec. 313.
SARA 311/312 Hazards
None
Massachusetts Right to Know Components

CAS # Revision Date

□

□

SAFETY DATA SHEET

None

Pennsylvania Right to Know Components

	CAS #	Revision Date
None		

New Jersey Right to Know Components

	CAS #	Revision Date
None		

California Prop. 65 Components
This product does not contain any substances known by the state of California to cause cancer.

Canadian Regulations: WHMIS Hazard Class: D2B, E - Toxic material causing other toxic effects,
All components of this product are on the Canadian Domestic Substances List.

SECTION 16. OTHER INFORMATION

HMIS RATINGS

HEALTH:	2
FLAMMABLITY:	2
REACTIVITY:	0
PERSONAL PROTECTION:	B

The information and recommendations contained herein are based upon data believed to be correct. However, no guarantee or warranty of any kind, expressed or implied, is made with respect to the information contained within this SDS. We accept no responsibility and disclaim all liability for any harmful effects which may be caused by exposure to our products. Customer/users of this product must comply with all applicable health and safety laws, regulations and orders.

□

SAFETY DATA SHEET

SECTION 1. IDENTIFICATION OF THE SUBSTANCE AND COMPANY

Product Name: FRP Repair Putty Base

Product Classification: Paint/Coating

Manufactured By: Adavnced FRP Systems Inc.
106 Finnell Dr.
Units 13/14
Weymouth, MA 02188
(508) 927-6915

In case of emergency contact: Chem-Tel 800-255-3924

Prepared by: Russell Giudici **Revision Date:** 06/2018

SECTION 2. IDENTIFICATION OF HAZARDS

GHS Classification in accordance with 29 CFR 1910.1200 (OSHA HCS)

Skin Irritant (category 2), H315
Skin Sensitizer (Category 1), H317
Eye Irritant (Category 2A), H319

GHS Label Elements, Including precautionary statements

Pictogram



Signal Word: WARNING

Hazard determining component(s):
Bisphenol A epoxy resin

Hazard Statements

H315	Causes skin irritation
H317	May cause allergic skin reaction
H319	Causes serious eye irritation

Precautionary Statements

P261	Avoid breading dust/fume/gas/mist/vapors/spray.
P264	Wash skin thoroughly after using this product.
P270	Do not eat, drink, or smoke when using this product
P272	Contaminated work clothes should not be allowed out of the workplace
P273	Avoid release into the environment
P280	Wear protective gloves/protective clothing/eye protection/face protection
P301+P312	IF SWALLOWED: Call a POISON CENTER or doctor/physician if feeling unwell.
P303+P361+P353	IF ON SKIN: Remove/take off immediately all contaminated clothing. Rinse skin with water/shower.
P304+P340+P312	IF INHALED: Remove person to fresh air and keep comfortable for breathing. Call a POISON CENTER or doctor/physician if you feel unwell.

SAFETY DATA SHEET

P305+P351+P338	IF IN EYES: Rinse cautiously with water for several minutes. Remove contact lenses if present and continue rinsing.
P333+P313	If skin irritation or rash occurs, Get medical advice/attention.
P362	Take off contaminated clothes and wash before reuse.
P370+P378	In case of fire use dry sand, dry chemicals or alcohol resistant foam for extinguishing.
P501	Dispose of contents/containers in accordance with local/regional/national/international regulations.

Hazards not otherwise classified (HNOC) or not covered by GHS

Hazardous to the aquatic environment – Chronic Category 2, Toxic to aquatic life with long lasting effects.

SECTION 3. COMPOSITION/INFORMATION ON INGREDIENTS

Chemical Name	CAS #	Classification	Concentration
Bisphenol A Epoxy Resin	25068-38-6	Skin Irrit. 2; Skin Sens. 1; Eye Irrit. 2; H315, H317, H319	50 - 70%
Polypropylene glycol diglycidyl Ether	9072-62-2	None	5 – 15%
Nepheline Syenite	37244-96-5	None	12 – 33%
CI Pigment Red 101	1309-37-1	None	1 – 5%
Alkyl quarternary ammonium clay	71011-24-0	None	2 – 9%
Hydrophobic Fumed Silica	67762-90-7	None	1 – 5%

SECTION 4. FIRST AID MEASURES

Inhalation: Remove person to fresh air. If signs or symptoms continue seek medical attention.

Skin Contact: Wash off with soap and water. If the chemical has penetrated clothing, remove clothing and was with soap and water.

Eye Contact: Immediately wash the eyes with plenty of water. If irritation persists, seek medical attention.

Ingestion: Do not induce vomiting. Consult a physician if necessary.

SECTION 5. FIRE-FIGHTING MEASURES

Extinguishing media: Use dry chemicals, CO2, water spray or foam. Move containers from fire area if you can without risk. Runoff from fire control may cause pollution. Dike water for later disposal.

Special Hazards: Material may burn but does not ignite readily. Fire may produce irritating, corrosive, and/or toxic gases.

Additional Measures: Cool closed containers by spraying with water. Do not allow water run off to enter drains or waterways.

SECTION 6. ACCIDENTAL RELEASE MEASURES

ELIMINATE ALL IGNITION SOURCES (no smoking, flares, sparks or flames in immediate area). Do not touch or walk through spilled material. Stop leak if you can do so without risk. Prevent entry into waterways, sewers, basements or confined areas. Absorb or cover with dry earth, sand, or other non-combustible material and transfer to containers. LARGE SPILLS: Dike far ahead of liquid spill to contain released material and runoff from fire control.

Environmental precautions

SAFETY DATA SHEET

Do not allow spills to enter drains or watercourses.

Methods and material for containment and cleaning up
Isolate spill or leak area immediately for at least 25 to 50 meters (80 to 160 feet) in all directions. Keep unauthorized personnel away. Stay upwind. Keep out of low areas. Ventilate closed spaces before entering.

SECTION 7. HANDLING AND STORAGE

Store all materials between 40 – 100 °F. Ensure storage area is well ventilated and free from all sources of ignition. Wash hands thoroughly after use. Immediately clean up any spills and keep containers tightly closed when not in use.

SECTION 8. EXPOSURE CONTROL AND PERSONAL PROTECTION

Control Parameters

Component	CAS Number	Value	Control Parameter	Basis
Nuisance Dust	N/A	TWA	5 mg/m^3 (respirable fraction) 15 mg/m^3 (total dust)	OSHA limits for Air Contamination 29 CFR 1910.1000

Exposure Control
Respiratory: Select equipment to provide protection from the ingredients listed in Section 3 of this document. Ensure fresh air entry during application and drying. If you experience eye watering, headache or dizziness or if air monitoring demonstrates dust, vapor, or mist levels are above applicable limits, wear an appropriate, properly fitted respirator (NIOSH approved) during and after application. Follow respirator manufacturer's directions for respirator use.

Eyes: Avoid contact with eyes. Protective equipment should be selected to provide protection from exposure to the chemicals listed in Section 3 of this document. Depending on the site-specific conditions of use, safety glasses, chemical goggles, and/or head and face protection may be required to prevent contact. The equipment must be thoroughly cleaned, or discarded after each use.

Skin: Protective equipment should be selected to provide protection from exposure to the chemicals listed in Section 3 of this document. Depending on the site-specific conditions of use, protective gloves, apron, boots, head and face protection may be required to prevent contact. The equipment must be thoroughly cleaned, or discarded after each use.

Engineering Controls: Depending on the site-specific conditions of use, provide adequate ventilation.

Other Work Practices
NCA019_A1
Emergency eye wash fountains and safety showers should be available in the immediate vicinity of any potential exposure. Use good personal hygiene practices. Wash hands before eating, drinking, using toilet facilities, etc. Promptly remove soiled clothing and wash clothing thoroughly before reuse. Shower after work using plenty of soap and water.

SECTION 9. PHYSICAL AND CHEMICAL PROPERTIES

Appearance and Odor	Red Paste, faint epoxy odor
Flammability of Explosive Limit	
Upper	No data available
Lower	No data available
Odor	faint chemical odor
Vapor Pressure	< 1.0 mmHg at 70 °F
Odor Threshold	No data available
Vapor Density	No data available
pH	Unknown

SAFETY DATA SHEET

Relative Density	1.19 g/mL
Melting Point/Freezing Point	< 0 °F
Solubility in water	Negligible
Initial Boiling Point	284 °F
Boiling Range	284 °F – 511 °F
Flash Point	284 °F
Evaporation Rate	No data available
Flammability	No data available
Partition Coefficient: n-octanol/water	No data available
Auto Ignition Temperature	No applicable
Decomposition Temperature	>500 °F
Viscosity	100,00 cps
% Volatile Content by Weight:	<0.2%
VOC Content	0 g/L

SECTION 10. STABILITY AND REACTIVITY

Reactivity: Avoid contact with strong mineral or Lewis acids as rapid polymerization can result. Also avoid strong oxidizing agents.

Chemical stability: This product is stable and hazardous polymerization will not occur. Not sensitive to mechanical impact. Excessive heat and fumes generation can occur if improperly handled.

Possibility of hazardous reactions: Avoid incompatible materials listed below.

Incompatible materials: Strong oxidizing agents. Strong mineral or Lewis acids.

Hazardous decomposition products: Heat is generated when the Base and Activator are mixed. Uncontrolled curing of large masses may cause the material to char or catch fire. Material may burn but does not ignite readily. Fire may produce irritating, corrosive and/or toxic gases. Sealed containers may explode when heated.

SECTION 11. TOXICOLOGICAL INFORMATION

Ingredient	Oral LD50, mg/kg	Skin LD50, mg/kg	Inhalation (vapor) LD50, mg/L/4h	Inhalation (dust/mist) LD50, mg/L/4h
Bisphenol A Epoxy Resin	>5,000	>6,000	>3,466	No Data

SECTION 12. ECOLOGICAL INFORMATION

Toxicity: No additional information is available on this product. See Section 3 for chemical specific breakdown of toxicity.

Aquatic Ecotoxicity

Ingredient	96h LC50 fish, mg/L	48h EC50 crustacea, mg/L	ErC50 algae, mg/L
Bisphenol A Epoxy Resin	1.5 (Rainbow Trout)	3.6 (Daphnia)	No data

Persistence and degradability: ~13% based on modified Stern Method, not readily biodegradable

SAFETY DATA SHEET

Bioaccumulation potential:	Not measured
Mobility in Soil:	No data available
Results of PBT and vPvB Assessment:	This product contains no PBT/vPvB chemicals.
Other Adverse Effects:	Harmful to aquatic life with long lasting effects.

SECTION 13. DISPOSAL CONSIDERATIONS

Waste Treatment Method: Do not allow spills to enter into drains or waterways. Dispose of in accordance with local, state and federal regulations. Part A and B can be mixed together and allowed to cure to form an inert solid to facilitate easy disposal.

SECTION 14. TRANSPORT INFORMATION

DOT (Domestic Surface Transportation)

DOT Proper Shipping Name:	Not Regulated
DOT Hazard Class:	Not Regulated
UN/NA Number:	Not Regulated
DOT Packaging Group:	Not Regulated
CERCLA/DOT RQ	Not Applicable

IMO/IMDG (Ocean Transport)

IMDG Proper Shipping Name:	Not Regulated
IMDG Hazard Class:	Not Regulated
Sub Class:	Not Applicable
IMDG Packaging Group:	Not Regulated
System Reference Code:	9

ICAO/IATA (Air Transport) : Hazard Class 9
Packaging Group: III

Environmental Hazards
Marine Pollutant (Bisphenol A Epoxy Resin)

SECTION 15. REGULATORY INFORMATION

SARA 302 Components
No chemicals in this material are subject to the reporting requirements of SARA Title III, Sec. 302.
SARA 313 Components
This material does not contain any chemical components with known CAS numbers that exceed the threshold (De Minimis) reporting levels established by SARA Title III, Sec. 313.
SARA 311/312 Hazards
Chronic Health Hazard
Massachusetts Right to Know Components

	CAS #	Revision Date
None		

Pennsylvania Right to Know Components

	CAS #	Revision Date
None		

□

SAFETY DATA SHEET

New Jersey Right to Know Components

	CAS #	Revision Date
None		

California Prop. 65 Components
This product does not contain any chemicals known to the State of California to cause cancer, birth defects or any other reproductive harm.

Canadian Regulations: WHMIS Hazard Class: D2B - Toxic material causing other toxic effects.
All components of this product are on the Canadian Domestic Substances List.

SECTION 16. OTHER INFORMATION

HMIS RATINGS

HEALTH:	2
FLAMMABLITY:	1
REACTIVITY:	0
PERSONAL PROTECTION:	B

The information and recommendations contained herein are based upon data believed to be correct. However, no guarantee or warranty of any kind, expressed or implied, is made with respect to the information contained within this SDS. We accept no responsibility and disclaim all liability for any harmful effects which may be caused by exposure to our products. Customer/users of this product must comply with all applicable health and safety laws, regulations and orders.

□

SAFETY DATA SHEET

SECTION 1. IDENTIFICATION OF THE SUBSTANCE AND COMPANY

Product Name: FRP Repair Putty Hardener

Product Classification: Paint/Coating

Manufactured By: Adavnced FRP Systems Inc.
106 Finnell Dr.
Units 13/14
Weymouth, MA 02188
(508) 927-6915

In case of emergency contact: Chem-Tel 800-255-3924

Prepared by: Russell Giudici **Revision Date:** 06/2018

SECTION 2. IDENTIFICATION OF HAZARDS

GHS Classification in accordance with 29 CFR 1910.1200 (OSHA HCS)

Acute Oral Toxcity (Category 4), H302
Skin Irritant (category 2), H315
Skin Sensitizer (Category 1), H317
Eye Damage (Category 1), H318
Acute Toxicity/Inhalation (Category 4), H332
Single Target Organ Toxicity, Respiratory (Category 2), H373
Aquatic Toxicity, Chronic (Category 3), H412

GHS Label Elements, Including precautionary statements

Pictogram



Signal Word: DANGER

Hazard determining component(s):
4,4'-Methylenebis(cyclohexamine)
Benzyl Alcohol
Epoxy Polyamine adduct
Salicylic acid

Hazard Statements

H302+332	Harmful if swallowed or inhaled
H315	Causes skin irritation
H317	May cause allergic skin reaction
H318	Causes serious eye damage
H373	May cause damage to organs through prolonged or repeated exposure
H 412	Harmful to aquatic life with long lasting effects

Precautionary Statements

P261	Avoid breading dust/fume/gas/mist/vapors/spray.
P264	Wash skin thoroughly after using this product.

SAFETY DATA SHEET

P270	Do not eat, drink, or smoke when using this product
P271	Use outdoors or in well ventilated areas
P272	Contaminated work clothes should not be allowed out of the workplace
P273	Avoid release into the environment
P280	Wear protective gloves/protective clothing/eye protection/face protection
P301+P312	IF SWALLOWED: Call a POISON CENTER or doctor/physician if feeling unwell.
P303+P361+P353	IF ON SKIN: Remove/take off immediately all contaminated clothing. Rinse skin with water/shower.
P304+P340+P312	IF INHALED: Remove person to fresh air and keep comfortable for breathing. Call a POISON CENTER or doctor/physician if you feel unwell.
P305+P351+P338	IF IN EYES: Rinse cautiously with water for several minutes. Remove contact lenses if present and continue rinsing.
P333+P313	If skin irritation or rash occurs, Get medical advice/attention.
P362	Take off contaminated clothes and wash before reuse.
P501	Dispose of contents/containers in accordance with local/regional/national/international regulations.

Hazards not otherwise classified (HNOC) or not covered by GHS

None

SECTION 3. COMPOSITION/INFORMATION ON INGREDIENTS

Chemical Name	CAS #	Classification	Concentration
4,4'-Methylenebis(cyclohexamine)	1761-71-3	Acute Tox. 4; Skin Corr. 1A; Skin Sens. 1; STOT-re 2; Aquatic Chronic 2; H302, H314, H317, H373, H411	30 - 45%
Benzyl Alcohol	100-51-6	Acute Tox. 4; Eye Irrit. 2A; Aquatic Acute 2; H302+332, H319, H401	2 - 6%
Epoxy Polyamine adduct	N/A	Acute Tox. 4; Skin Irrit. 2; Skin Sens. 1; Eye Irrit. 2; H302, H315, H317, H319	15 - 25%
Salicylic Acid	69-72-7	Acute tox. 4; Skin Irrit. 3; Eye Dam. 1; H302, H316, H318	<2%
Silicon Dioxide, synthetic PNOR	67762-90-7	None	2 – 9%
Alkyl Quarternary Ammonium Bentonite	71011-25-1	None	5 – 15%
Titanium Dioxide	13462-67-7	None	0 – 5%

SECTION 4. FIRST AID MEASURES

Inhalation: Remove person to fresh air. If signs or symptoms continue seek medical attention.

Skin Contact: Wash off with soap and water. If the chemical has penetrated clothing, remove clothing and was with soap and water.

Eye Contact: Immediately wash the eyes with plenty of water. If irritation persists, seek medical attention.

Ingestion: Do not induce vomiting. Consult a physician if necessary.

SECTION 5. FIRE-FIGHTING MEASURES

Extinguishing media: Use dry chemicals, CO_2, water spray or foam. Move containers from fire area if you can without risk. Runoff from fire control may cause pollution. Dike water for later disposal.

SAFETY DATA SHEET

Special Hazards:	Material may burn but does not ignite readily. Fire may produce irritating, corrosive, and/or toxic gases.
Additional Measures:	Cool closed containers by spraying with water. Do not allow water run off to enter drains or waterways.

SECTION 6. ACCIDENTAL RELEASE MEASURES

ELIMINATE ALL IGNITION SOURCES (no smoking, flares, sparks or flames in immediate area). Do not touch or walk through spilled material. Stop leak if you can do so without risk. Prevent entry into waterways, sewers, basements or confined areas. Absorb or cover with dry earth, sand, or other non-combustible material and transfer to containers. LARGE SPILLS: Dike far ahead of liquid spill to contain released material and runoff from fire control.

Environmental precautions
Do not allow spills to enter drains or watercourses.

Methods and material for containment and cleaning up
Isolate spill or leak area immediately for at least 25 to 50 meters (80 to 160 feet) in all directions. Keep unauthorized personnel away. Stay upwind. Keep out of low areas. Ventilate closed spaces before entering.

SECTION 7. HANDLING AND STORAGE

Store all materials between 40 – 100 °F. Ensure storage area is well ventilated and free from all sources of ignition. Wash hands thoroughly after use. Immediately clean up any spills and keep containers tightly closed when not in use.

SECTION 8. EXPOSURE CONTROL AND PERSONAL PROTECTION

Control Parameters

Component	CAS Number	Value	Control Parameter	Basis
Benzyl Alcohol	100-51-6	TWA	10.00 mg/m^3	USA. Workplace Environmental Exposure Levels (WEEL)
Titanium Dioxide	13463-67-7	TWA	10.00 mg/m^3	USA. ACGIH Threshold Limit Values (TLV)

Exposure Control
Respiratory: Select equipment to provide protection from the ingredients listed in Section 3 of this document. Ensure fresh air entry during application and drying. If you experience eye watering, headache or dizziness or if air monitoring demonstrates dust, vapor, or mist levels are above applicable limits, wear an appropriate, properly fitted respirator (NIOSH approved) during and after application. Follow respirator manufacturer's directions for respirator use.

Eyes: Avoid contact with eyes. Protective equipment should be selected to provide protection from exposure to the chemicals listed in Section 3 of this document. Depending on the site-specific conditions of use, safety glasses, chemical goggles, and/or head and face protection may be required to prevent contact. The equipment must be thoroughly cleaned, or discarded after each use.

Skin: Protective equipment should be selected to provide protection from exposure to the chemicals listed in Section 3 of this document. Depending on the site-specific conditions of use, protective gloves, apron, boots, head and face protection may be required to prevent contact. The equipment must be thoroughly cleaned, or discarded after each use.

Engineering Controls: Depending on the site-specific conditions of use, provide adequate ventilation.

Other Work Practices
NCA019_A1

SAFETY DATA SHEET

Emergency eye wash fountains and safety showers should be available in the immediate vicinity of any potential exposure. Use good personal hygiene practices. Wash hands before eating, drinking, using toilet facilities, etc. Promptly remove soiled clothing and wash clothing thoroughly before reuse. Shower after work using plenty of soap and water.

SECTION 9. PHYSICAL AND CHEMICAL PROPERTIES

Appearance and Odor	White Paste, Mild amine odor
Flammability of Explosive Limit	
Upper	No data available
Lower	No data available
Odor	faint chemical odor
Vapor Pressure	0.094 mmHg at 72 °F
Odor Threshold	No data available
Vapor Density	No data available
pH	Unknown
Relative Density	1.70 g/mL
Melting Point/Freezing Point	< 0 °F
Solubility in water	Negligible
Initial Boiling Point	>400 °F
Boiling Range	400 °F – 511 °F
Flash Point	>215 °F
Evaporation Rate	No data available
Flammability	No data available
Partition Coefficient: n-octanol/water	No data available
Auto Ignition Temperature	No applicable
Decomposition Temperature	>500 °F
Viscosity	40,000 cps
% Volatile Content by Weight:	<0.2%
VOC Content	0 g/L

SECTION 10. STABILITY AND REACTIVITY

Reactivity: Avoid contact with strong mineral or Lewis acids as rapid polymerization can result. Also avoid strong oxidizing agents.

Chemical stability: This product is stable and hazardous polymerization will not occur. Not sensitive to mechanical impact. Excessive heat and fumes generation can occur if improperly handled.

Possibility of hazardous reactions: Avoid incompatible materials listed below.

Incompatible materials: Strong oxidizing agents. Strong mineral or Lewis acids.

Hazardous decomposition products: Heat is generated when the Base and Activator are mixed. Uncontrolled curing of large masses may cause the material to char or catch fire. Material may burn but does not ignite readily. Fire may produce irritating, corrosive and/or toxic gases. Sealed containers may explode when heated.

SECTION 11. TOXICOLOGICAL INFORMATION

Ingredient	Oral LD50, mg/kg	Skin LD50, mg/kg	Inhalation (vapor) LD50, mg/L/4h	Inhalation (dust/mist) LD50, mg/L/4h
Product	690 (rat)	2188 (rabbit)	>900 (rabbit)	No data
Titanium Dioxide	10,000	10,000	No Data	6.82

SAFETY DATA SHEET

Specific Target Organ Toxicity – Single exposure (STOT-se): Product not classified based on available data
Specific Target Organ Toxicity – repeated exposure (STOT-re): May cause damage to the liver and skeletal muscles through prolonged or repeated exposure

Chronic Health Effects: Skin sensitizer; once sensitized, a severe allergic reaction may occur when subsequently exposed. After repeated high-dose oral exposure the substance causes adverse effects to the liver and kidneys.

SECTION 12. ECOLOGICAL INFORMATION

Toxicity: No additional information is available on this product. See Section 3 for chemical specific breakdown of toxicity.

Aquatic Ecotoxicity

Ingredient	96h LC50 fish, mg/L	48h EC50 crustacea, mg/L	ErC50 algae, mg/L
Product	10 (freshwater fish)	10 (daphnia)	16 (algae)
Titanium Dioxide	1,000 (Fundulus heteroclitus)	5.50 (Daphna)	5.83 (78h) (Pseudokirchneriella subcapitata)

General effect: Harmful to aquatic life with long lasting effects

Persistence and degradability: Not readily biodegradable

Bioaccumulation potential: Not measured

Mobility in Soil: No data available

Results of PBT and vPvB Assessment: This product contains no PBT/vPvB chemicals.

Other Adverse Effects: Neutralization may be required prior to waste water treatment

SECTION 13. DISPOSAL CONSIDERATIONS

Waste Treatment Method: Do not allow spills to enter into drains or waterways. Dispose of in accordance with local, state and federal regulations. Part A and B can be mixed together and allowed to cure to form an inert solid to facilitate easy disposal.

SECTION 14. TRANSPORT INFORMATION

DOT (Domestic Surface Transportation)
DOT Proper Shipping Name: Not Regulated
DOT Hazard Class: Not Regulated
UN/NA Number: Not Regulated
DOT Packaging Group: Not Regulated
CERCLA/DOT RQ Not Applicable

IMO/IMDG (Ocean Transport)
IMDG Proper Shipping Name: Not Regulated
IMDG Hazard Class: Not Regulated
Sub Class: Not Applicable
IMDG Packaging Group: Not Regulated
System Reference Code: Not Regulated

SAFETY DATA SHEET

ICAO/IATA (Air Transport) : Not Regulated
Packaging Group: N/A

Environmental Hazards
None

SECTION 15. REGULATORY INFORMATION

SARA 302 Components
No chemicals in this material are subject to the reporting requirements of SARA Title III, Sec. 302.
SARA 313 Components
This material does not contain any chemical components with known CAS numbers that exceed the threshold (De Minimis) reporting levels established by SARA Title III, Sec. 313.
SARA 311/312 Hazards
Acute Health Hazard, Chronic Health Hazard
Massachusetts Right to Know Components

	CAS #	Revision Date
Titanium Dioxide	13463-67-7	2007-03-01

Pennsylvania Right to Know Components

	CAS #	Revision Date
Titanium Dioxide	13463-67-7	2007-03-01

New Jersey Right to Know Components

	CAS #	Revision Date
Titanium Dioxide	13463-67-7	2007-03-01

California Prop. 65 Components
Warning! This product may contain a chemical known to the state of California to cause cancer.

	CAS #	Revision Date
Titanium Dioxide	13463-67-7	2007-03-01

Canadian Regulations: WHMIS Hazard Class: D2B, E - Toxic material causing other toxic effects,
All components of this product are on the Canadian Domestic Substances List.

SECTION 16. OTHER INFORMATION

HMIS RATINGS

HEALTH:	3
FLAMMABLITY:	1
REACTIVITY:	0
PERSONAL PROTECTION:	B

The information and recommendations contained herein are based upon data believed to be correct. However, no guarantee or warranty of any kind, expressed or implied, is made with respect to the information contained within this SDS. We accept no responsibility and disclaim all liability for any harmful effects which may be caused by exposure to our products. Customer/users of this product must comply with all applicable health and safety laws, regulations and orders.

SAFETY DATA SHEET

SECTION 1. IDENTIFICATION OF THE SUBSTANCE AND COMPANY

Product Name: FRP Saturant 210 Base

Product Classification: Paint/Coating

Manufactured By: Adavnced FRP Systems Inc.
106 Finnell Dr. Units 13/14
Weymouth, MA 02188
(508) 927-6915

In case of emergency contact: Chem-Tel 800-255-3924

Prepared by: Russell Giudici **Revision Date:** 6/2018

SECTION 2. IDENTIFICATION OF HAZARDS

GHS Classification in accordance with 29 CFR 1910.1200 (OSHA HCS)

Skin Irritant (category 2), H315
Skin Sensitizer (Category 1), H317
Eye Irritant (Category 2A), H319

GHS Label Elements, Including precautionary statements

Pictogram



Signal Word: WARNING

Hazard determining component(s):
Bisphenol A epoxy resin
Butanedioldiglycidyl ether

Hazard Statements

H315	Causes skin irritation
H317	May cause allergic skin reaction
H319	Causes serious eye irritation

Precautionary Statements

P261	Avoid breading dust/fume/gas/mist/vapors/spray.
P264	Wash skin thoroughly after using this product.
P270	Do not eat, drink, or smoke when using this product
P271	Use only outdoors or in well ventilated areas
P272	Contaminated work clothes should not be allowed out of the workplace
P273	Avoid release into the environment
P280	Wear protective gloves/protective clothing/eye protection/face protection
P301+P312	IF SWALLOWED: Call a POISON CENTER or doctor/physician if feeling unwell.
P303+P361+P353	IF ON SKIN: Remove/take off immediately all contaminated clothing. Rinse skin with water/shower.

□

SAFETY DATA SHEET

ADVANCED FRP SYSTEMS

P304+P340+P312	IF INHALED: Remove person to fresh air and keep comfortable for breathing. Call a POISON CENTER or doctor/physician if you feel unwell.
P305+P351+P338	IF IN EYES: Rinse cautiously with water for several minutes. Remove contact lenses if present and continue rinsing.
P333+P313	If skin irritation or rash occurs, Get medical advice/attention.
P362	Take off contaminated clothes and wash before reuse.
P370+P378	In case of fire use dry sand, dry chemicals or alcohol resistant foam for extinguishing.
P501	Dispose of contents/containers in accordance with local/regional/national/international regulations.

Hazards not otherwise classified (HNOC) or not covered by GHS

None

SECTION 3. COMPOSITION/INFORMATION ON INGREDIENTS

Chemical Name	CAS #	Classification	Concentration
Bisphenol A Epoxy Resin	25068-38-6	Skin Irrit. 2; Skin Sens. 1; Eye Irrit. 2; H315, H317, H319	50 - 70%
Butanedioldiglycidyl ether	16096-31-4	Skin Irrit. 2; Skin Sens. 1; Eye Irrit. 2; H315, H317, H319	10 - 40%
1,2-ethanediamine polymer with aziridine	398475-96-2	Eye Irrit. 2A; H 319	0 – 2%
Epoxy phenol novolac resin	28064-14-4	Skin Irrit. 2; Skin Sens. 1; H315, H317	5 - 10%

SECTION 4. FIRST AID MEASURES

Inhalation: Remove person to fresh air. If signs or symptoms continue seek medical attention.

Skin Contact: Wash off with soap and water. If the chemical has penetrated clothing, remove clothing and was with soap and water.

Eye Contact: Immediately wash the eyes with plenty of water. If irritation persists, seek medical attention.

Ingestion: Do not induce vomiting. Consult a physician if necessary.

SECTION 5. FIRE-FIGHTING MEASURES

Extinguishing media: Use dry chemicals, CO2, water spray or foam. Move containers from fire area if you can without risk. Runoff from fire control may cause pollution. Dike water for later disposal.

Special Hazards: Material may burn but does not ignite readily. Fire may produce irritating, corrosive, and/or toxic gases.

Additional Measures: Cool closed containers by spraying with water. Do not allow water run off to enter drains or waterways.

SECTION 6. ACCIDENTAL RELEASE MEASURES

ELIMINATE ALL IGNITION SOURCES (no smoking, flares, sparks or flames in immediate area). Do not touch or walk through spilled material. Stop leak if you can do so without risk. Prevent entry into waterways, sewers, basements

SAFETY DATA SHEET

or confined areas. Absorb or cover with dry earth, sand, or other non-combustible material and transfer to containers.
LARGE SPILLS: Dike far ahead of liquid spill to contain released material and runoff from fire control.

Environmental precautions
Do not allow spills to enter drains or watercourses.

Methods and material for containment and cleaning up
Isolate spill or leak area immediately for at least 25 to 50 meters (80 to 160 feet) in all directions. Keep unauthorized personnel away. Stay upwind. Keep out of low areas. Ventilate closed spaces before entering.

SECTION 7. HANDLING AND STORAGE

Store all materials between 40 – 100 °F. Ensure storage area is well ventilated and free from all sources of ignition. Wash hands thoroughly after use. Immediately clean up any spills and keep containers tightly closed when not in use.

SECTION 8. EXPOSURE CONTROL AND PERSONAL PROTECTION

Control Parameters

Component	CAS Number	Value	Control Parameter	Basis

Exposure Control
Respiratory: Select equipment to provide protection from the ingredients listed in Section 3 of this document. Ensure fresh air entry during application and drying. If you experience eye watering, headache or dizziness or if air monitoring demonstrates dust, vapor, or mist levels are above applicable limits, wear an appropriate, properly fitted respirator (NIOSH approved) during and after application. Follow respirator manufacturer's directions for respirator use.

Eyes: Avoid contact with eyes. Protective equipment should be selected to provide protection from exposure to the chemicals listed in Section 3 of this document. Depending on the site-specific conditions of use, safety glasses, chemical goggles, and/or head and face protection may be required to prevent contact. The equipment must be thoroughly cleaned, or discarded after each use.

Skin: Protective equipment should be selected to provide protection from exposure to the chemicals listed in Section 3 of this document. Depending on the site-specific conditions of use, protective gloves, apron, boots, head and face protection may be required to prevent contact. The equipment must be thoroughly cleaned, or discarded after each use.

Engineering Controls: Depending on the site-specific conditions of use, provide adequate ventilation.

Other Work Practices
NCA019_A1
Emergency eye wash fountains and safety showers should be available in the immediate vicinity of any potential exposure. Use good personal hygiene practices. Wash hands before eating, drinking, using toilet facilities, etc. Promptly remove soiled clothing and wash clothing thoroughly before reuse. Shower after work using plenty of soap and water.

SECTION 9. PHYSICAL AND CHEMICAL PROPERTIES

Appearance	Amber liquid
Flammability of Explosive Limit	
Upper	No data available

□

SAFETY DATA SHEET

Lower	No data available
Odor	faint epoxy odor
Vapor Pressure	10 mmHg at 70 °F
Odor Threshold	No data available
Vapor Density	No data available
pH	Unknown
Relative Density	1.16 g/mL
Melting Point/Freezing Point	< 0 °F
Solubility in water	Negligible
Initial Boiling Point	284 °F
Boiling Range	284 °F – 511 °F
Flash Point	284 °F
Evaporation Rate	No data available
Flammability	No data available
Partition Coefficient: n-octanol/water	No data available
Auto Ignition Temperature	Not applicable
Decomposition Temperature	>500 °F
Viscosity	900 cps
% Volatile Content by Weight:	<0.2%
VOC Content	0 g/L

SECTION 10. STABILITY AND REACTIVITY

Reactivity: Avoid contact with strong mineral or Lewis acids as rapid polymerization can result. Also avoid strong oxidizing agents.

Chemical stability: This product is stable and hazardous polymerization will not occur. Not sensitive to mechanical impact. Excessive heat and fumes generation can occur if improperly handled.

Possibility of hazardous reactions: Avoid incompatible materials listed below.

Incompatible materials: Strong oxidizing agents. Strong mineral or Lewis acids.

Hazardous decomposition products: Heat is generated when the Base and Activator are mixed. Uncontrolled curing of large masses may cause the material to char or catch fire. Material may burn but does not ignite readily. Fire may produce irritating, corrosive and/or toxic gases. Sealed containers may explode when heated.

SECTION 11. TOXICOLOGICAL INFORMATION

Ingredient	Oral LD50, mg/kg	Skin LD50, mg/kg	Inhalation (vapor) LD50, mg/L/4h	Inhalation (dust/mist) LD50, mg/L/4h
Bisphenol A Epoxy Resin	>5,000	>6,000	>3,466	No Data

SECTION 12. ECOLOGICAL INFORMATION

Toxicity: No additional information is available on this product. See Section 3 for chemical specific breakdown of toxicity.

Aquatic Ecotoxicity

Ingredient	96h LC50 fish, mg/L	48h EC50 crustacea, mg/L	ErC50 algae, mg/L

□

□□□□□□□□□□0□□

□□□□□□□□□□□□□□□0□0□

□□□□□□

SAFETY DATA SHEET

Bisphenol A Epoxy Resin	1.5 (Rainbow Trout)	3.6 (Daphnia)	No data
Epoxy phenol novolac resin	>2,000	>2,000	No Data

Persistence and degradability: ~13% based on modified Stern Method, not readily biodegradable

Bioaccumulation potential: Not measured

Mobility in Soil: No data available

Results of PBT and vPvB Assessment: This product contains no PBT/vPvB chemicals.

Other Adverse Effects: Harmful to aquatic life with long lasting effects.

SECTION 13. DISPOSAL CONSIDERATIONS

Waste Treatment Method: Do not allow spills to enter into drains or waterways. Dispose of in accordance with local, state and federal regulations. Part A and B can be mixed together and allowed to cure to form an inert solid to facilitate easy disposal.

SECTION 14. TRANSPORT INFORMATION

DOT (Domestic Surface Transportation)

DOT Proper Shipping Name:	Not Regulated
DOT Hazard Class:	Not Regulated
UN/NA Number:	Not Regulated
DOT Packaging Group:	Not Regulated
CERCLA/DOT RQ	Not Applicable

IMO/IMDG (Ocean Transport)

IMDG Proper Shipping Name:	Not Regulated
IMDG Hazard Class:	Not Regulated
Sub Class:	Not Applicable
IMDG Packaging Group:	Not Regulated
System Reference Code:	9

ICAO/IATA (Air Transport) : Hazard Class 9
Packaging Group: III

Environmental Hazards
Marine Pollutant (Bisphenol A Epoxy Resin)

SECTION 15. REGULATORY INFORMATION

SARA 302 Components
No chemicals in this material are subject to the reporting requirements of SARA Title III, Sec. 302.
SARA 313 Components
This material does not contain any chemical components with known CAS numbers that exceed the threshold (De Minimis) reporting levels established by SARA Title III, Sec. 313.
SARA 311/312 Hazards
Chronic Health Hazard
Massachusetts Right to Know Components

	CAS #	Revision Date
None		

□

SAFETY DATA SHEET

Pennsylvania Right to Know Components

	CAS #	Revision Date
None		

New Jersey Right to Know Components

	CAS #	Revision Date
None		

California Prop. 65 Components
This product does not contain any chemicals known to the State of California to cause cancer, birth defects or any other reproductive harm.

Canadian Regulations: WHMIS Hazard Class: D2B - Toxic material causing other toxic effects,
All components of this product are on the Canadian Domestic Substances List.

SECTION 16. OTHER INFORMATION

HMIS RATINGS

HEALTH:	2
FLAMMABLITY:	1
REACTIVITY:	0
PERSONAL PROTECTION:	B

The information and recommendations contained herein are based upon data believed to be correct. However, no guarantee or warranty of any kind, expressed or implied, is made with respect to the information contained within this SDS. We accept no responsibility and disclaim all liability for any harmful effects which may be caused by exposure to our products. Customer/users of this product must comply with all applicable health and safety laws, regulations and orders.

□

SAFETY DATA SHEET

SECTION 1. IDENTIFICATION OF THE SUBSTANCE AND COMPANY

Product Name: FRP-Saturant 210 HT Hardener

Product Classification: Paint/Coating

Manufactured By: Adavnced FRP Systems Inc.
106 Finnell Dr. Units 13/14
(508) 927-6915

In case of emergency contact: Chem-Tel 800-255-3924

Prepared by: Russell Giudici **Revision Date:** 5/2018

SECTION 2. IDENTIFICATION OF HAZARDS

GHS Classification in accordance with 29 CFR 1910.1200 (OSHA HCS)

Acute Oral Toxcity (Category 4), H302
Skin Corrosion (category 1B), H314
Skin Sensitizer (Category 1), H317

GHS Label Elements, Including precautionary statements

Pictogram



Signal Word: DANGER

Hazard determining component(s):
3-aminomethyl-3,5,5-trimethylcyclohexane
m-phenylenebis(methylamine)
3,6,9-triazaundecamethylenediamine
Epoxy Polyamine adduct
Salicylic Acid

Hazard Statements

H302	Harmful if swallowed
H314	Causes severe skin burns and eye damage
H317	May cause allergic skin reaction

Precautionary Statements

P101	If medical advice is needed, have product container or label on hand.
P102	Keep out of reach of children
P103	Read label before use
P260	Do not breathe dust/fume/gas/mist/vapors/spray.
P264	Wash skin thoroughly after using this product.
P270	Do not eat, drink, or smoke when using this product
P280	Wear protective gloves/protective clothing/eye protection/face protection
P303+P361+P353	IF ON SKIN: Remove/take off immediately all contaminated clothing. Rinse skin with water/shower.

□

SAFETY DATA SHEET

P305+P351+P338	IF IN EYES: Rinse cautiously with water for several minutes. Remove contact lenses if present and continue rinsing.
P333+P313	If skin irritation or rash occurs, Get medical advice/attention.
P362	Take off contaminated clothes and wash before reuse.
P501	Dispose of contents/containers in accordance with local/regional/national/international regulations.

Hazards not otherwise classified (HNOC) or not covered by GHS

None

SECTION 3. COMPOSITION/INFORMATION ON HAZARDOUS INGREDIENTS

Chemical Name	CAS #	Classification	Concentration
m-phenylenebis(methylamine)	1477-55-0	Skin Cor. 1B; Acute Tox 4; Acute Tox. 4; Skin Sens. 1; H314, H302, H332, H317	40 – 55%
Epoxy Polyamine adduct	N/A	Acute Tox. 4; Skin Irrit. 2; Skin Sens. 1; Eye Irrit. 2; H302, H315, H317, H319	15 - 30%
3-aminopropyldimethylamine	109-55-7	Flam. Liq 3; Acute Tox. 4; Skin Cor. 1B, Skin Sens. 1; H226, H302, H314, H317	3.0 – 8.0%
Salicylic Acid	69-72-7	Acute tox. 4; Skin Irrit. 3; Eye Dam. 1; H302, H316, H318	0 - 5%
3,6,9-triazaundecamethylenediamine	112-57-2	Skin Cor. 1B; Acute Tox 4; Acute Tox. 4; Skin Sens. 1; H314, H302, H312, H317	0 – 5%

SECTION 4. FIRST AID MEASURES

Inhalation:	Remove person to fresh air. If signs or symptoms continue seek medical attention.
Skin Contact:	Wash off with soap and water. If the chemical has penetrated clothing, remove clothing and was with soap and water.
Eye Contact:	Immediately wash the eyes with plenty of water. If irritation persists, seek medical attention.
Ingestion:	Do not induce vomiting. Consult a physician if necessary.

SECTION 5. FIRE-FIGHTING MEASURES

Extinguishing media:	Use dry chemicals, CO2, water spray or foam. Move containers from fire area if you can without risk. Runoff from fire control may cause pollution. Dike water for later disposal.
Special Hazards:	Material may burn but does not ignite readily. Fire may produce irritating, corrosive, and/or toxic gases.
Additional Measures:	Cool closed containers by spraying with water. Do not allow water run off to enter drains or waterways.

□

□

SAFETY DATA SHEET

ADVANCED FRP SYSTEMS

SECTION 6. ACCIDENTAL RELEASE MEASURES

ELIMINATE ALL IGNITION SOURCES (no smoking, flares, sparks or flames in immediate area). Do not touch or walk through spilled material. Stop leak if you can do so without risk. Prevent entry into waterways, sewers, basements or confined areas. Absorb or cover with dry earth, sand, or other non-combustible material and transfer to containers. LARGE SPILLS: Dike far ahead of liquid spill to contain released material and runoff from fire control.

Environmental precautions
Do not allow spills to enter drains or watercourses.

Methods and material for containment and cleaning up
Isolate spill or leak area immediately for at least 25 to 50 meters (80 to 160 feet) in all directions. Keep unauthorized personnel away. Stay upwind. Keep out of low areas. Ventilate closed spaces before entering.

SECTION 7. HANDLING AND STORAGE

Store all materials between 40 – 100 °F. Ensure storage area is well ventilated and free from all sources of ignition. Wash hands thoroughly after use. Immediately clean up any spills and keep containers tightly closed when not in use.

SECTION 8. EXPOSURE CONTROL AND PERSONAL PROTECTION

Control Parameters

Component	CAS Number	Value	Control Parameter	Basis
3,6,9-triazaundecamethylenediamen	112-57-2	Long term value; skin	5.00 mg/m^3	USA. Workplace Environmental Exposure Levels (WEEL)

Exposure Control
Respiratory: Select equipment to provide protection from the ingredients listed in Section 3 of this document. Ensure fresh air entry during application and drying. If you experience eye watering, headache or dizziness or if air monitoring demonstrates dust, vapor, or mist levels are above applicable limits, wear an appropriate, properly fitted respirator (NIOSH approved) during and after application. Follow respirator manufacturer's directions for respirator use.

Eyes: Avoid contact with eyes. Protective equipment should be selected to provide protection from exposure to the chemicals listed in Section 3 of this document. Depending on the site-specific conditions of use, safety glasses, chemical goggles, and/or head and face protection may be required to prevent contact. The equipment must be thoroughly cleaned, or discarded after each use.

Skin: Protective equipment should be selected to provide protection from exposure to the chemicals listed in Section 3 of this document. Depending on the site-specific conditions of use, protective gloves, apron, boots, head and face protection may be required to prevent contact. The equipment must be thoroughly cleaned, or discarded after each use.

Engineering Controls: Depending on the site-specific conditions of use, provide adequate ventilation.

Other Work Practices
NCA019_A1
Emergency eye wash fountains and safety showers should be available in the immediate vicinity of any potential exposure. Use good personal hygiene practices. Wash hands before eating, drinking, using toilet facilities, etc. Promptly remove soiled clothing and wash clothing thoroughly before reuse. Shower after work using plenty of soap and water.

SECTION 9. PHYSICAL AND CHEMICAL PROPERTIES

% Volatile Content by Weight: <0.2%

□

□□□□□□□□□0□□

□□□□□□□□□□□□□□□0□0□

□□□□□□

□

SAFETY DATA SHEET

VOC Content	0 g/L
Initial Boiling Point	>400 °F
Flash Point	>230 °F
Flammability Limits	LEL = not determined UEL = not determined
Auto Igniting	Product is not self-igniting
Danger of explosion	Product does not present an explosion hazard
Vapor Pressure	not determined
Vapor Density	not determined
Evaporation Rate	not determined
Specific Gravity	0.95 g/mL
Viscosity	50- 200 cps @ 75 °F
Solubility in water	Not Soluble
Appearance and Odor	Amber Liquid, amine odor
pH	Unknown

SECTION 10. STABILITY AND REACTIVITY

Reactivity: Avoid contact with strong mineral or Lewis acids as rapid polymerization can result. Also avoid strong oxidizing agents.

Chemical stability: This product is stable and hazardous polymerization will not occur. Not sensitive to mechanical impact. Excessive heat and fumes generation can occur if improperly handled.

Possibility of hazardous reactions: Avoid incompatible materials listed below.

Incompatible materials: Strong oxidizing agents. Strong mineral or Lewis acids.

Hazardous decomposition products: Heat is generated when the Base and Activator are mixed. Uncontrolled curing of large masses may cause the material to char or catch fire. Material may burn but does not ignite readily. Fire may produce irritating, corrosive and/or toxic gases. Sealed containers may explode when heated.

SECTION 11. TOXICOLOGICAL INFORMATION

Ingredient	Oral LD50, mg/kg	Skin LD50, mg/kg	Inhalation (vapor) LD50, mg/L/4h	Inhalation (dust/mist) LD50, mg/L/4h
m-phenylenebis(methylamine)	1040 (rat)	No Data	2.4 (rabbit)	No data
3,6,9-triazaundecamethylenediamine	No Data	660 (rabbit)	No data	No data

Primary Irritant Effects:
On the skin: Caustic effect on skin and mucous membrane
On the eye: Strong caustic effect

Specific Target Organ Toxicity – Single exposure (STOT-se): Product not classified based on available data
Specific Target Organ Toxicity – repeated exposure (STOT-re): Product not classified as dangerous based on available data

Chronic Health Effects: Skin sensitizer; once sensitized, a severe allergic reaction may occur when subsequently exposed. After repeated high-dose oral exposure the substance causes adverse effects to the liver and kidneys.

SECTION 12. ECOLOGICAL INFORMATION

Toxicity: No additional information is available on this product. See Section 3 for chemical specific breakdown

□

SAFETY DATA SHEET

of toxicity.

Aquatic Ecotoxicity

Ingredient	96h LC50 fish, mg/L	48h EC50 crustacea, mg/L	ErC50 algae, mg/L

General effect: No data available

Persistence and degradability: Not readily biodegradable

Bioaccumulation potential: Not measured

Mobility in Soil: No data available

Results of PBT and vPvB Assessment: This product contains no PBT/vPvB chemicals.

Other Adverse Effects: Water Hazard Class 2; hazardous for water
Do not allow product to reach ground water
Must not reach bodies of water or drainage ditch undiluted or unneutralized
Danger to drinking water if even small quantities leak into ground
harmful to aquatic organisms

SECTION 13. DISPOSAL CONSIDERATIONS

Waste Treatment Method: Do not allow spills to enter into drains or waterways. Dispose of in accordance with local, state and federal regulations. Part A and B can be mixed together and allowed to cure to form an inert solid to facilitate easy disposal.

SECTION 14. TRANSPORT INFORMATION

DOT (Domestic Surface Transportation)

DOT Proper Shipping Name:	Not Regulated
DOT Hazard Class:	Not Regulated
UN/NA Number:	Not Regulated
DOT Packaging Group:	Not Regulated
CERCLA/DOT RQ	Not Applicable

IMO/IMDG (Ocean Transport)

IMDG Proper Shipping Name:	Not Regulated
IMDG Hazard Class:	Not Regulated
Sub Class:	Not Applicable
IMDG Packaging Group:	Not Regulated
System Reference Code:	Not Regulated

Environmental Hazards
None

SECTION 15. REGULATORY INFORMATION

SARA 302 Components
No chemicals in this material are subject to the reporting requirements of SARA Title III, Sec. 302.

□

SAFETY DATA SHEET

SARA 313 Components
This material does not contain any chemical components with known CAS numbers that exceed the threshold (De Minimis) reporting levels established by SARA Title III, Sec. 313.
SARA 311/312 Hazards
Acute Health Hazard, Chronic Health Hazard
Massachusetts Right to Know Components

	CAS #	Revision Date
None		

Pennsylvania Right to Know Components

	CAS #	Revision Date
None		

New Jersey Right to Know Components

	CAS #	Revision Date
None		

California Prop. 65 Components
This product does not contain any substances known by the state of California to cause cancer.

Canadian Regulations: WHMIS Hazard Class: D2B, E - Toxic material causing other toxic effects,
All components of this product are on the Canadian Domestic Substances List.

SECTION 16. OTHER INFORMATION

HMIS RATINGS

HEALTH:	3
FLAMMABLITY:	1
REACTIVITY:	0
PERSONAL PROTECTION:	B

The information and recommendations contained herein are based upon data believed to be correct. However, no guarantee or warranty of any kind, expressed or implied, is made with respect to the information contained within this SDS. We accept no responsibility and disclaim all liability for any harmful effects which may be caused by exposure to our products. Customer/users of this product must comply with all applicable health and safety laws, regulations and orders.

□

□□□□□□□□□□0□□

□□□□□□□□□□□□□□□0□0□

□□□□□□

SAFETY DATA SHEET

SECTION 1. IDENTIFICATION OF THE SUBSTANCE AND COMPANY

Product Name: HP 300 Epoxy Base

Product Classification: Paint/Coating

Manufactured By: Adavnced FRP Systems Inc.
106 Finnell Dr.
Units 13/14
Weymouth, MA 02188
(508) 927-6915

In case of emergency contact: Chem-Tel 800-255-3924

Prepared by: Russell Giudici **Revision Date:** 06/08/2018

SECTION 2. IDENTIFICATION OF HAZARDS

GHS Classification in accordance with 29 CFR 1910.1200 (OSHA HCS)

Skin Irritant (category 2), H315
Skin Sensitizer (Category 1), H317
Eye Irritant (Category 2A), H319
Aquatic Chronic (Category 4), H413

GHS Label Elements, Including precautionary statements

Pictogram



Signal Word: WARNING

Hazard determining component(s):
Bisphenol A epoxy resin
Cahew nutshell liquid, oligiomeric reaction product with epichlorohydrin

Hazard Statements

H315	Causes skin irritation
H317	May cause allergic skin reaction
H319	Causes serious eye irritation
H 413	May cause long lasting harmful effects to aquatic life.

Precautionary Statements

P261	Avoid breading dust/fume/gas/mist/vapors/spray.
P264	Wash skin thoroughly after using this product.
P270	Do not eat, drink, or smoke when using this product
P273	Avoid release into the environment
P280	Wear protective gloves/protective clothing/eye protection/face protection
P301+P312	IF SWALLOWED: Call a POISON CENTER or doctor/physician if feeling unwell.
P303+P361+P353	IF ON SKIN: Remove/take off immediately all contaminated clothing. Rinse skin with water/shower.

SAFETY DATA SHEET

P304+P340+P312	IF INHALED: Remove person to fresh air and keep comfortable for breathing. Call a POISON CENTER or doctor/physician if you feel unwell.
P305+P351+P338	IF IN EYES: Rinse cautiously with water for several minutes. Remove contact lenses if present and continue rinsing.
P333+P313	If skin irritation or rash occurs, Get medical advice/attention.
P363	Wash contaminated clothes before reuse.
P370+P378	In case of fire use dry sand, dry chemicals or alcohol resistant foam for extinguishing.
P501	Dispose of contents/containers in accordance with local/regional/national/international regulations.

Hazards not otherwise classified (HNOC) or not covered by GHS

None

SECTION 3. COMPOSITION/INFORMATION ON INGREDIENTS

Chemical Name	CAS #	Classification	Concentration
Bisphenol A Epoxy Resin	25068-38-6	Skin Irrit. 2; Skin Sens. 1; Eye Irrit. 2; H315, H317, H319	30 - 60%
Cashew nutshell liquid, oligiomeric reaction product with epichlorohydrin	68413-24-1	Skin Sens. 1; Eye Irrit. 2; Aquatic Chronic 4; H317, H319, H413	6 – 12%
Nepheline Syenite	37244-96-5	None	24 – 45%
CI Pigment Red 101	1309-37-1	None	0 – 5%
Titanium Dioxide	13462-67-7	None	0 – 5%
Hydrophobic Fumed Silica	67762-90-7	None	1 – 5%

SECTION 4. FIRST AID MEASURES

Inhalation: Remove person to fresh air. If signs or symptoms continue seek medical attention.

Skin Contact: Wash off with soap and water. If the chemical has penetrated clothing, remove clothing and was with soap and water.

Eye Contact: Immediately wash the eyes with plenty of water. If irritation persists, seek medical attention.

Ingestion: Do not induce vomiting. Consult a physician if necessary.

SECTION 5. FIRE-FIGHTING MEASURES

Extinguishing media: Use dry chemicals, CO_2, water spray or foam. Move containers from fire area if you can without risk. Runoff from fire control may cause pollution. Dike water for later disposal.

Special Hazards: Material may burn but does not ignite readily. Fire may produce irritating, corrosive, and/or toxic gases.

Additional Measures: Cool closed containers by spraying with water. Do not allow water run off to enter drains or waterways.

SECTION 6. ACCIDENTAL RELEASE MEASURES

ELIMINATE ALL IGNITION SOURCES (no smoking, flares, sparks or flames in immediate area). Do not touch or walk through spilled material. Stop leak if you can do so without risk. Prevent entry into waterways, sewers, basements

SAFETY DATA SHEET

or confined areas. Absorb or cover with dry earth, sand, or other non-combustible material and transfer to containers.
LARGE SPILLS: Dike far ahead of liquid spill to contain released material and runoff from fire control.

Environmental precautions
Do not allow spills to enter drains or watercourses.

Methods and material for containment and cleaning up
Isolate spill or leak area immediately for at least 25 to 50 meters (80 to 160 feet) in all directions. Keep unauthorized personnel away. Stay upwind. Keep out of low areas. Ventilate closed spaces before entering.

SECTION 7. HANDLING AND STORAGE

Store all materials between 40 – 100 °F. Ensure storage area is well ventilated and free from all sources of ignition. Wash hands thoroughly after use. Immediately clean up any spills and keep containers tightly closed when not in use.

SECTION 8. EXPOSURE CONTROL AND PERSONAL PROTECTION

Control Parameters

Component	CAS Number	Value	Control Parameter	Basis
Titanium Dioxide	13463-67-7	TWA	10.00 mg/m^3	USA. ACGIH Threshold Limit Values (TLV)

Exposure Control
Respiratory: Select equipment to provide protection from the ingredients listed in Section 3 of this document. Ensure fresh air entry during application and drying. If you experience eye watering, headache or dizziness or if air monitoring demonstrates dust, vapor, or mist levels are above applicable limits, wear an appropriate, properly fitted respirator (NIOSH approved) during and after application. Follow respirator manufacturer's directions for respirator use.

Eyes: Avoid contact with eyes. Protective equipment should be selected to provide protection from exposure to the chemicals listed in Section 3 of this document. Depending on the site-specific conditions of use, safety glasses, chemical goggles, and/or head and face protection may be required to prevent contact. The equipment must be thoroughly cleaned, or discarded after each use.

Skin: Protective equipment should be selected to provide protection from exposure to the chemicals listed in Section 3 of this document. Depending on the site-specific conditions of use, protective gloves, apron, boots, head and face protection may be required to prevent contact. The equipment must be thoroughly cleaned, or discarded after each use.

Engineering Controls: Depending on the site-specific conditions of use, provide adequate ventilation.

Other Work Practices
NCA019_A1
Emergency eye wash fountains and safety showers should be available in the immediate vicinity of any potential exposure. Use good personal hygiene practices. Wash hands before eating, drinking, using toilet facilities, etc. Promptly remove soiled clothing and wash clothing thoroughly before reuse. Shower after work using plenty of soap and water.

SECTION 9. PHYSICAL AND CHEMICAL PROPERTIES

Appearance	Red or Grey viscous liquid
Flammability of Explosive Limit	
Upper	No data available

SAFETY DATA SHEET

Lower	No data available
Odor	faint epoxy odor
Vapor Pressure	10 mmHg at 70 °F
Odor Threshold	No data available
Vapor Density	No data available
pH	Unknown
Relative Density	1.36 g/mL
Melting Point/Freezing Point	< 0 °F
Solubility in water	Negligible
Initial Boiling Point	>400 °F
Boiling Range	>400 °F
Flash Point	>400 °F
Evaporation Rate	No data available
Flammability	No data available
Partition Coefficient: n-octanol/water	No data available
Auto Ignition Temperature	Not applicable
Decomposition Temperature	>500 °F
Viscosity	20,000 cps
% Volatile Content by Weight:	<0.2%
VOC Content	0 g/L

SECTION 10. STABILITY AND REACTIVITY

Reactivity: Avoid contact with strong mineral or Lewis acids as rapid polymerization can result. Also avoid strong oxidizing agents.

Chemical stability: This product is stable and hazardous polymerization will not occur. Not sensitive to mechanical impact. Excessive heat and fumes generation can occur if improperly handled.

Possibility of hazardous reactions: Avoid incompatible materials listed below.

Incompatible materials: Strong oxidizing agents. Strong mineral or Lewis acids.

Hazardous decomposition products: Heat is generated when the Base and Activator are mixed. Uncontrolled curing of large masses may cause the material to char or catch fire. Material may burn but does not ignite readily. Fire may produce irritating, corrosive and/or toxic gases. Sealed containers may explode when heated.

SECTION 11. TOXICOLOGICAL INFORMATION

Ingredient	Oral LD50, mg/kg	Skin LD50, mg/kg	Inhalation (vapor) LD50, mg/L/4h	Inhalation (dust/mist) LD50, mg/L/4h
Bisphenol A Epoxy Resin	>5,000	>6,000	>3,466	No data
Titanium Dioxide	10,000	10,000	No Data	6.82

SECTION 12. ECOLOGICAL INFORMATION

Toxicity: No additional information is available on this product. See Section 3 for chemical specific breakdown of toxicity.

Aquatic Ecotoxicity

Ingredient	96h LC50 fish, mg/L	48h EC50 crustacea, mg/L	ErC50 algae, mg/L
Bisphenol A Epoxy Resin	1.5 (Rainbow Trout)	3.6 (Daphnia)	No data

SAFETY DATA SHEET

Titanium Dioxide	1,000 (Fundulus heteroclitus)	5.50 (Daphna)	5.83 (78h) (Pseudokirchneriella subcapitata)

Persistence and degradability: ~13% based on modified Stern Method

Bioaccumulation potential: Not measured

Mobility in Soil: No data available

Results of PBT and vPvB Assessment: This product contains no PBT/vPvB chemicals.

Other Adverse Effects: None known

SECTION 13. DISPOSAL CONSIDERATIONS

Waste Treatment Method: Do not allow spills to enter into drains or waterways. Dispose of in accordance with local, state and federal regulations. Part A and B can be mixed together and allowed to cure to form an inert solid to facilitate easy disposal.

SECTION 14. TRANSPORT INFORMATION

DOT (Domestic Surface Transportation)

DOT Proper Shipping Name:	Not Regulated
DOT Hazard Class:	Not Regulated
UN/NA Number:	Not Regulated
DOT Packaging Group:	Not Regulated
CERCLA/DOT RQ	Not Applicable

IMO/IMDG (Ocean Transport)

IMDG Proper Shipping Name:	Not Regulated
IMDG Hazard Class:	Not Regulated
Sub Class:	Not Applicable
IMDG Packaging Group:	Not Regulated
System Reference Code:	9

ICAO/IATA (Air Transport) : Hazard Class 9
Packaging Group: III

Environmental Hazards
Marine Pollutant (Bisphenol A Epoxy Resin)

SECTION 15. REGULATORY INFORMATION

SARA 302 Components
No chemicals in this material are subject to the reporting requirements of SARA Title III, Sec. 302.
SARA 313 Components
This material does not contain any chemical components with known CAS numbers that exceed the threshold (De Minimis) reporting levels established by SARA Title III, Sec. 313.
SARA 311/312 Hazards
Chronic Health Hazard
Massachusetts Right to Know Components

	CAS #	Revision Date
Titanium Dioxide	13463-67-7	2007-03-01

□

SAFETY DATA SHEET

Pennsylvania Right to Know Components

	CAS #	Revision Date
Titanium Dioxide	13463-67-7	2007-03-01

New Jersey Right to Know Components

	CAS #	Revision Date
Titanium Dioxide	13463-67-7	2007-03-01

California Prop. 65 Components

Warning! This product may contain a chemical known to the state of California to cause cancer.

	CAS #	Revision Date
Titanium Dioxide	13463-67-7	2007-03-01

Canadian Regulations: WHMIS Hazard Class: D2B - Toxic material causing other toxic effects, All components of this product are on the Canadian Domestic Substances List.

SECTION 16. OTHER INFORMATION

HMIS RATINGS

HEALTH:	2
FLAMMABLITY:	1
REACTIVITY:	0
PERSONAL PROTECTION:	B

The information and recommendations contained herein are based upon data believed to be correct. However, no guarantee or warranty of any kind, expressed or implied, is made with respect to the information contained within this SDS. We accept no responsibility and disclaim all liability for any harmful effects which may be caused by exposure to our products. Customer/users of this product must comply with all applicable health and safety laws, regulations and orders.

SAFETY DATA SHEET

SECTION 1. IDENTIFICATION OF THE SUBSTANCE AND COMPANY

Product Name: HP-300 Epoxy Hardener

Product Classification: Paint/Coating

Manufactured By: Adavnced FRP Systems Inc.
106 Finnell Dr.
Units 13/14
Weymouth, MA 02188
(508) 927-6915

In case of emergency contact: Chem-Tel 800-255-3924

Prepared by: Russell Giudici **Revision Date:** 06/2018

SECTION 2. IDENTIFICATION OF HAZARDS

GHS Classification in accordance with 29 CFR 1910.1200 (OSHA HCS)

Acute Oral Toxcity (Category 4), H302
Skin Irritant (category 2), H315
Skin Sensitizer (Category 1), H317
Eye Damage (Category 1), H318
Acute Toxicity/Inhalation (Category 4), H332
Single Target Organ Toxicity, Respiratory (Category 2), H373
Aquatic Toxicity, Chronic (Category 3), H412

GHS Label Elements, Including precautionary statements

Pictogram



Signal Word: DANGER

Hazard determining component(s):
4,4'-Methylenebis(cyclohexamine)
Benzyl Alcohol
Epoxy Polyamine adduct
Salicylic acid

Hazard Statements

H302+332	Harmful if swallowed or inhaled
H315	Causes skin irritation
H317	May cause allergic skin reaction
H318	Causes serious eye damage
H373	May cause damage to organs through prolonged or repeated exposure
H 412	Harmful to aquatic life with long lasting effects

Precautionary Statements

P261	Avoid breading dust/fume/gas/mist/vapors/spray.

SAFETY DATA SHEET

P264	Wash skin thoroughly after using this product.
P270	Do not eat, drink, or smoke when using this product
P271	Use outdoors or in well ventilated areas
P272	Contaminated work clothes should not be allowed out of the workplace
P273	Avoid release into the environment
P280	Wear protective gloves/protective clothing/eye protection/face protection
P301+P312	IF SWALLOWED: Call a POISON CENTER or doctor/physician if feeling unwell.
P303+P361+P353	IF ON SKIN: Remove/take off immediately all contaminated clothing. Rinse skin with water/shower.
P304+P340+P312	IF INHALED: Remove person to fresh air and keep comfortable for breathing. Call a POISON CENTER or doctor/physician if you feel unwell.
P305+P351+P338	IF IN EYES: Rinse cautiously with water for several minutes. Remove contact lenses if present and continue rinsing.
P333+P313	If skin irritation or rash occurs, Get medical advice/attention.
P362	Take off contaminated clothes and wash before reuse.
P501	Dispose of contents/containers in accordance with local/regional/national/international regulations.

Hazards not otherwise classified (HNOC) or not covered by GHS

None

SECTION 3. COMPOSITION/INFORMATION ON INGREDIENTS

Chemical Name	CAS #	Classification	Concentration
4,4'-Methylenebis(cyclohexamine)	1761-71-3	Acute Tox. 4; Skin Corr. 1A; Skin Sens. 1; STOT-re 2; Aquatic Chronic 2; H302, H314, H317, H373, H411	35 - 50%
Benzyl Alcohol	100-51-6	Acute Tox. 4; Eye Irrit. 2A; Aquatic Acute 2; H302+332, H319, H401	35 - 45%
Epoxy Polyamine adduct	N/A	Acute Tox. 4; Skin Irrit. 2; Skin Sens. 1; Eye Irrit. 2; H302, H315, H317, H319	15 - 30%
Salicylic Acid	69-72-7	Acute tox. 4; Skin Irrit. 3; Eye Dam. 1; H302, H316, H318	3 - 7%

SECTION 4. FIRST AID MEASURES

Inhalation: Remove person to fresh air. If signs or symptoms continue seek medical attention.

Skin Contact: Wash off with soap and water. If the chemical has penetrated clothing, remove clothing and was with soap and water.

Eye Contact: Immediately wash the eyes with plenty of water. If irritation persists, seek medical attention.

Ingestion: Do not induce vomiting. Consult a physician if necessary.

SECTION 5. FIRE-FIGHTING MEASURES

Extinguishing media: Use dry chemicals, CO_2, water spray or foam. Move containers from fire area if you can without risk. Runoff from fire control may cause pollution. Dike water for later disposal.

SAFETY DATA SHEET

Special Hazards:	Material may burn but does not ignite readily. Fire may produce irritating, corrosive, and/or toxic gases.
Additional Measures:	Cool closed containers by spraying with water. Do not allow water run off to enter drains or waterways.

SECTION 6. ACCIDENTAL RELEASE MEASURES

ELIMINATE ALL IGNITION SOURCES (no smoking, flares, sparks or flames in immediate area). Do not touch or walk through spilled material. Stop leak if you can do so without risk. Prevent entry into waterways, sewers, basements or confined areas. Absorb or cover with dry earth, sand, or other non-combustible material and transfer to containers. LARGE SPILLS: Dike far ahead of liquid spill to contain released material and runoff from fire control.

Environmental precautions
Do not allow spills to enter drains or watercourses.

Methods and material for containment and cleaning up
Isolate spill or leak area immediately for at least 25 to 50 meters (80 to 160 feet) in all directions. Keep unauthorized personnel away. Stay upwind. Keep out of low areas. Ventilate closed spaces before entering.

SECTION 7. HANDLING AND STORAGE

Store all materials between 40 – 100 °F. Ensure storage area is well ventilated and free from all sources of ignition. Wash hands thoroughly after use. Immediately clean up any spills and keep containers tightly closed when not in use.

SECTION 8. EXPOSURE CONTROL AND PERSONAL PROTECTION

Control Parameters

Component	CAS Number	Value	Control Parameter	Basis
Benzyl Alcohol	100-51-6	TWA	10.00 mg/m^3	USA. Workplace Environmental Exposure Levels (WEEL)

Exposure Control
Respiratory: Select equipment to provide protection from the ingredients listed in Section 3 of this document. Ensure fresh air entry during application and drying. If you experience eye watering, headache or dizziness or if air monitoring demonstrates dust, vapor, or mist levels are above applicable limits, wear an appropriate, properly fitted respirator (NIOSH approved) during and after application. Follow respirator manufacturer's directions for respirator use.

Eyes: Avoid contact with eyes. Protective equipment should be selected to provide protection from exposure to the chemicals listed in Section 3 of this document. Depending on the site-specific conditions of use, safety glasses, chemical goggles, and/or head and face protection may be required to prevent contact. The equipment must be thoroughly cleaned, or discarded after each use.

Skin: Protective equipment should be selected to provide protection from exposure to the chemicals listed in Section 3 of this document. Depending on the site-specific conditions of use, protective gloves, apron, boots, head and face protection may be required to prevent contact. The equipment must be thoroughly cleaned, or discarded after each use.

Engineering Controls: Depending on the site-specific conditions of use, provide adequate ventilation.

Other Work Practices
NCA019_A1
Emergency eye wash fountains and safety showers should be available in the immediate vicinity of any potential exposure. Use good personal hygiene practices. Wash hands before eating, drinking, using toilet facilities, etc.

□

SAFETY DATA SHEET

Promptly remove soiled clothing and wash clothing thoroughly before reuse. Shower after work using plenty of soap and water.

SECTION 9. PHYSICAL AND CHEMICAL PROPERTIES

Appearance	Amber liquid
Flammability of Explosive Limit	
Upper	13%
Lower	0.6%
Odor	Mild Amine Odor
Vapor Pressure	0.094 mmHg @ 72 oF
Odor Threshold	No data available
Vapor Density	No data available
pH	Unknown
Relative Density	1.06 g/mL
Melting Point/Freezing Point	< 0 °F
Solubility in water	Partially Soluble
Initial Boiling Point	>400 °F
Boiling Range	>400 °F
Flash Point	>250 °F
Evaporation Rate	<1 (Butyl acetate = 1)
Flammability	No data available
Partition Coefficient: n-octanol/water	No data available
Auto Ignition Temperature	Not applicable
Decomposition Temperature	>500 °F
Viscosity	200 - 600 cps
% Volatile Content by Weight:	<0.2%
VOC Content	0 g/L

SECTION 10. STABILITY AND REACTIVITY

Reactivity: Avoid contact with strong mineral or Lewis acids as rapid polymerization can result. Also avoid strong oxidizing agents.

Chemical stability: This product is stable and hazardous polymerization will not occur. Not sensitive to mechanical impact. Excessive heat and fumes generation can occur if improperly handled.

Possibility of hazardous reactions: Avoid incompatible materials listed below.

Incompatible materials: Strong oxidizing agents. Strong mineral or Lewis acids.

Hazardous decomposition products: Heat is generated when the Base and Activator are mixed. Uncontrolled curing of large masses may cause the material to char or catch fire. Material may burn but does not ignite readily. Fire may produce irritating, corrosive and/or toxic gases. Sealed containers may explode when heated.

SECTION 11. TOXICOLOGICAL INFORMATION

Ingredient	Oral LD50, mg/kg	Skin LD50, mg/kg	Inhalation (vapor) LD50, mg/L/4h	Inhalation (dust/mist) LD50, mg/L/4h
Product	690 (rat)	2188 (rabbit)	>900 (rabbit)	No data

□

□

SAFETY DATA SHEET

Specific Target Organ Toxicity – Single exposure (STOT-se): Product not classified based on available data
Specific Target Organ Toxicity – repeated exposure (STOT-re): May cause damage to the liver and skeletal muscles through prolonged or repeated exposure

Chronic Health Effects: Skin sensitizer; once sensitized, a severe allergic reaction may occur when subsequently exposed. After repeated high-dose oral exposure the substance causes adverse effects to the liver and kidneys.

SECTION 12. ECOLOGICAL INFORMATION

Toxicity: No additional information is available on this product. See Section 3 for chemical specific breakdown of toxicity.

Aquatic Ecotoxicity

Ingredient	96h LC50 fish, mg/L	48h EC50 crustacea, mg/L	ErC50 algae, mg/L
Product	10 (freshwater fish)	10 (daphnia)	16 (algae)

General effect: Harmful to aquatic life with long lasting effects

Persistence and degradability: Not readily biodegradable

Bioaccumulation potential: Not measured

Mobility in Soil: No data available

Results of PBT and vPvB Assessment: This product contains no PBT/vPvB chemicals.

Other Adverse Effects: Neutralization may be required prior to waste water treatment

SECTION 13. DISPOSAL CONSIDERATIONS

Waste Treatment Method: Do not allow spills to enter into drains or waterways. Dispose of in accordance with local, state and federal regulations. Part A and B can be mixed together and allowed to cure to form an inert solid to facilitate easy disposal.

SECTION 14. TRANSPORT INFORMATION

DOT (Domestic Surface Transportation)

DOT Proper Shipping Name:	Not Regulated
DOT Hazard Class:	Not Regulated
UN/NA Number:	Not Regulated
DOT Packaging Group:	Not Regulated
CERCLA/DOT RQ	Not Applicable

IMO/IMDG (Ocean Transport)

IMDG Proper Shipping Name:	Not Regulated
IMDG Hazard Class:	Not Regulated
Sub Class:	Not Applicable
IMDG Packaging Group:	Not Regulated
System Reference Code:	Not Regulated

□

□

SAFETY DATA SHEET

ICAO/IATA (Air Transport) : Not Regulated
Packaging Group: N/A

Environmental Hazards
None

SECTION 15. REGULATORY INFORMATION

SARA 302 Components
No chemicals in this material are subject to the reporting requirements of SARA Title III, Sec. 302.
SARA 313 Components
This material does not contain any chemical components with known CAS numbers that exceed the threshold (De Minimis) reporting levels established by SARA Title III, Sec. 313.
SARA 311/312 Hazards
Acute Health Hazard, Chronic Health Hazard
Massachusetts Right to Know Components

	CAS #	Revision Date
None		

Pennsylvania Right to Know Components

	CAS #	Revision Date
None		

New Jersey Right to Know Components

	CAS #	Revision Date
None		

California Prop. 65 Components
This product does not contain any substances known by the state of California to cause cancer.

Canadian Regulations: WHMIS Hazard Class: D2B, E - Toxic material causing other toxic effects,
All components of this product are on the Canadian Domestic Substances List.

SECTION 16. OTHER INFORMATION

HMIS RATINGS

HEALTH:	3
FLAMMABLITY:	1
REACTIVITY:	0
PERSONAL PROTECTION:	B

The information and recommendations contained herein are based upon data believed to be correct. However, no guarantee or warranty of any kind, expressed or implied, is made with respect to the information contained within this SDS. We accept no responsibility and disclaim all liability for any harmful effects which may be caused by exposure to our products. Customer/users of this product must comply with all applicable health and safety laws, regulations and orders.

□

□

CONSOLIDATED EDISON COMPANY OF NEW YORK, INC.
4 IRVING PLACE
NEW YORK, NEW YORK 10003

ENGINEERING INSTRUCTION

CE-SI-1080

Guidelines for Protecting Existing Underground Transmission Electric Facilities from Nearby Construction Activities

REVISION 01

SEPTEMBER, 2018

Prepared By:	Jungmin Lee Hou	9/25/2018
	Civil Engineering – Engineer	Date
EH&S Review By:	Walter Stepien	8/16/2018
	EHS Design Engineering	Date
Civil Engineering		
SME Concurrence By:	Mun Lai Wong	9/18/2018
	Civil Engineering – Senior Engineer	Date
Transmission Operations		
SME Concurrence By:	Vernon Schaefer	9/19/2018
	Transmission Operations – Project Manager	Date
Transmission Engineering		
SME Concurrence By:	Arie Makovoz	9/20/2018
	Transmission Operations – Technical Expert	Date
Approve By:	Tom Villani	9/24/2018
	Transmission Engineering – Section Manager	Date
Approve By:	Michael Nuzzi	8/14/2018
	Civil Engineering – Section Manager	Date
Effective Date:	**9/25/2018**	

Paper copies of the Engineering Operations Manual are uncontrolled and therefore may be outdated. Please verify that you have the current version prior to use by viewing the Central Engineering website (http://ceng/).

□

TABLE OF CONTENTS

SECTION	SUBJECT	PAGE
1.0	SCOPE	3
2.0	DEFINITIONS	3
3.0	INSTRUCTIONS	4
4.0	EXHIBITS	11
5.0	REFERENCES	12

Paper copies of the Engineering Operations Manual are uncontrolled and therefore may be outdated. Please verify that you have the current version prior to use by viewing the Central Engineering website (http://ceng/).

SECTION I – GENERAL REQUIREMENTS

1.0 SCOPE

The scope of this document is a general guideline for the prevention of damage to high pressure pipes and coating for underground 69, 138 and 345 kV cable systems (electric facilities), caused by construction on ***("outside plant")*** properties not owned by CECONY. The guideline provides information such as:

a) general instructions ***and notification requirements*** prior to any construction activities;
b) clearance requirements;
c) precautions/protections to be made; and
d) special notes during construction activities

The guideline is not applicable for solid dielectric or self-contained oil-filled cables. Specific work plans for these type of Transmission Feeders shall be reviewed with Con Edison for approval.

1.1 APPLICATION

This instruction applies to all Consolidated Edison Company of New York, Inc. (CECONY) organizations and contractors, and outside "third party" organization with oversight responsibility for municipal public improvement contractors and non-municipal contractors, commencing or engaging in underground construction activities associated with excavations, foundations, and demolitions within the vicinity of CECONY's existing underground transmission system.

2.0 DEFINITIONS

2.1 **CECONY** refers to Consolidated Edison Company of New York, Inc.

2.2 **Contractor** is the construction firm hired by the Property Owner or Project Manager to perform the construction services.

2.3 **Designated Contact** is the contact person identified within the Project Manager Company and the Property Owner who has the responsibility to communicate on all of the planned construction works to be carried out safely.

2.4 **Encroachment Area** is the area where the ground disturbance occurs within 25 feet on land of the centerline of the ***Assumed*** Location of the existing electric facilities.

2.5 ***Assumed*** **Location** is the location of underground facilities determined from the subsurface investigations, ***such as record drawings or utility mark outs on streets.***

2.6 ***Known Location is the Assumed Location that is visually confirmed from hand dug test holes. Both horizontal and vertical locations of underground facilities shall be field verified at, (a) every proposed crossings, (b) every turn in direction, and (c) a minimum of two locations along a straight run of the existing Transmission Electric Facilities. A use of vacuum excavations is an acceptable means of***

Paper copies of the Engineering Operations Manual are uncontrolled and therefore may be outdated. Please verify that you have the current version prior to use by viewing the Central Engineering website (http://ceng/).

exposing underground facilities.

2.7 **Professional Engineer** is the engineer, currently licensed in New York State, hired by the Property Owner or Contractor to perform the engineering/design services.

2.8 **Property Owner** is the entity that has legal jurisdiction or ownership of the work area or new facility being installed.

2.9 **Tolerance Zone** is the area in which soil must be removed by non-mechanical means, such as hand excavations methods, to expose subsurface utilities ***in absence of test pits.*** It is ***2-ft clear distance on both sides*** of ***the Assumed Locations and the width of the existing Transmission Electric Facilities***.

2.10 **Trained Personnel** refer to someone who is capable of identifying existing and predictable hazards in the surroundings or working conditions, has authorization to take prompt corrective measures to eliminate the hazards, and is trained and experienced in utility installation and inspection.

2.11 **Transmission Electric Facilities** refer to underground transmission feeders ***69kV and higher*** and associated circulation piping.

2.12 **Wingback** is the required longitudinal distance of a pipe to be exposed by excavation in order to achieve the desired relocated position.

3.0 INSTRUCTIONS

3.1 GENERAL INSTRUCTIONS

3.1.1 Follow the requirements outlined in the State of New York Department of Public Service NYCRR 16 Part 753, "Protection of Underground Facilities".

3.1.2 ***Perform subsurface investigations and mark-outs prior to planning and performing any work in the Encroachment Area of the underground Transmission Electric Facilities.***

3.1.3 Mark-outs of the ***Assumed*** Locations of the underground facilities must be refreshed periodically, by the Contractor, to ensure underground facilities locations are always clearly identified over the entire project duration. If at any time the underground facilities marks become illegible, work must be stopped until the locations can be re-identified.

3.1.4 Contractor shall provide proper support of all ***exposed*** Transmission Electric Facilities during excavation activities.

3.1.4.1 A work plan, including pipe support design and calculations, shall be submitted to CECONY Engineering for approval, at least two weeks prior to performing any work in the Encroachment Area of the electric facilities. Refer to section 3.4 for pipe support design criteria.

3.1.4.2 ***For management of excavated soils, refer to section 3.5, "Backfill".***

Paper copies of the Engineering Operations Manual are uncontrolled and therefore may be outdated. Please verify that you have the current version prior to use by viewing the Central Engineering website (http://ceng/).

□□□□□□□□□□0□□

□□□□□□□□□□□□□□□0□0□

□□□□□□

3.1.4.3 CECONY Transmission Operation shall review the work plan on an as-needed basis and shall inspect the work area for pipe support, moving process and coating conditions prior to backfill.

3.1.4.4 The approved work plan shall be obtained by the Contractor prior to commencement of any work.

3.1.5 ***In absence of test pits, excavation within the Tolerance Zone shall be performed by hand only. Saw-cutting pavements within the Tolerance Zone is allowed with blade depths less than the confirmed asphalt pavement thickness.***

3.1.6 ***For Known Locations, a zone of protection shall be established by shielding the exposed facilities from damage that could result from falling debris, i.e. rocks, concrete, compacted soil, etc. Machine excavation or additional saw-cutting of pavements may then be allowed as directed by CECONY Engineering or CECONY Field Representative.***

3.1.7 Maintain clearances and separation distances to the existing Transmission Electric Facilities to the maximum extent possible at all times. Refer to section 3.2 for clearance and separation distance requirements.

3.1.8 Only Trained Personnel should work in the vicinity of exposed underground Transmission Electric Facilities.

3.2 CLEARANCES AND SEPARATION DISTANCE

3.2.1 Existing Transmission Electric Facilities within the Tolerance Zone must be protected in place. In general, a minimum of 3 feet of cover over the electric facilities shall be maintained. When less than 2 feet of cover is authorized because of special conditions, suitable guards shall be placed over pipes as described in CE-TS-3352. Clear distance between the guard and the pipe shall be a minimum of 6 inches. Contractor may be allowed to move the existing Transmission Electric Facilities by following the requirements described in section 3.2.2 and ***3.4.4***, or the new facilities must be relocated.

3.2.2 Maintain ***both*** the following minimum required ***vertical*** clearances and ***horizontal*** separation distances between ***existing*** Transmission Electric Facilities and ***the new subsurface*** facilities:

Paper copies of the Engineering Operations Manual are uncontrolled and therefore may be outdated. Please verify that you have the current version prior to use by viewing the Central Engineering website (http://cenq/).

□□□□□□□□□□0□□

□□□□□□□□□□□□□□□0□0□

Subsurface Facility	Minimum Required Vertical Clearance* to Electric Facilities [ft]		Minimum Required Horizontal Separation Distance* to Electric Facilities [ft]	
	Without Protection	With Protection	Without Protection	With Protection
Gas Transmission Facilities Ⓐ Ⓑ Ⓒ	1.0	0.5	1.0	0.5
Gas Distribution Facilities Ⓐ Ⓑ Ⓒ	1.0	0.5	1.0	0.5
Gas Service Facilities Ⓑ Ⓒ	1.0	0.5	1.0	0.5
Electric Distribution Facilities Ⓑ Ⓔ Duct Bank ≥ 6 Ducts Duct Bank < 6 Ducts	 1.0 1.0	 *** ***	 12.0 6.0	 *** ***
Steam Main Ⓑ Pipe Size ≥ 6 inch Pipe Size < 6 inch	 2.0 1.5	 *** ***	 12.0 6.0	 *** ***
Liquid Petroleum Pipelines Ⓑ Ⓒ	1.0	0.5	1.0	0.5
Water & Sewer Ⓑ **	2.0	***	2.0	***
Temporary Construction (e.g. sheeting, shoring, piles, etc.)	2.0	1.0	2.0	1.0
Other Utilities (e.g. telephone, cable, etc.) Ⓓ	1.0	***	1.0	***
Permanent Structures (e.g. piles, piers, catch basins, manholes, etc.)	2.0	***	2.0	***

* *If it is not practical to achieve the minimum required clearance or separation distance, it may be further reduced provided that all parties involved agree to the reduction and that suitable protective materials are placed between the electrical and other facilities for the entire length of the reduced clearances.*

** **If Transmission Electric Facilities pass within 2-ft of water mains or services, Transmission Electric Facilities shall be protected as described in specification CE-TS-3352, Section 1.2.4.**

*** **As directed by CECONY Field Representative**

Ⓐ *CECONY Corporate Instruction CI-920-1, "Gas Facilities – Clearances, Encroachments, Interference, and Corrosion".*

Ⓑ *CECONY Specification CE-TS-3352, "Specification for the Installation of High Pressure Pipe for 69, 138 and 345 kV Cable Systems – Section I General Requirements".*

Ⓒ *State of New York Department of Public Service NYCRR 16 Part 101, "Underground Electric Facility Construction".*

Ⓓ *2012 NESC – National Electrical Safety Code, C2-2012, IEEE Standard Association.*

Ⓔ *CECONY Specification CE-ES-3004, "Construction Specification for the Installation of Underground Fiberglass Reinforced Epoxy (FRE) and Polyvinyl Chloride (PVC) Conduits.*

Paper copies of the Engineering Operations Manual are uncontrolled and therefore may be outdated. Please verify that you have the current version prior to use by viewing the Central Engineering website (http://ceng/).

3.3 Vibration Monitoring Program

3.3.1 Construction activities that involve blasting and non-blasting activities, including but not limited to pile driving, hydraulic breakers (hoe ram), drilling or boring activities, in the Encroachment Area of the underground facilities having the potential to produce vibration levels that may be susceptible to damaging existing Transmission Electric Facilities shall be monitored.

3.3.2 All blasting and non-blasting activities described in section 3.3.1 must be approved by CECONY Engineering prior to commencing the work and may require a vibration monitoring ***plan*** subject to CECONY review and approval. ***Allow minimum two weeks for CECONY Engineering's review and approval of a vibration monitoring plan.***

3.3.3 The Contractor is required to engage professional engineering services to conduct an existing conditions survey of the Transmission Electric Facilities, and an experienced vibration monitoring Consultant***, with minimum 5 years of related experience in New York State***, is required to measure peak particle velocities prior to and during construction activities.

3.3.4 The measured vibration level experienced on the Transmission Electrical Facilities shall not exceed 0.5 in/sec. If maximum values are approached, construction activities shall be halted; construction means and methods shall be reevaluated, or an approved alternative construction methodology may be adopted ***to mitigate excessive vibration.***

3.3.5 The vibration monitoring plan shall include, but not be limited to, the following items:

3.3.5.1 Description of the Transmission Electric Facilities to be surveyed;

3.3.5.2 Monitoring equipment;

3.3.5.3 Monitoring device locations;

3.3.5.4 Monitoring frequency;

3.3.5.5 List of personnel to be notified (supplied by CECONY) in the event that vibration approaches the threshold limits.

3.3.6 The Contractor shall maintain a continuous log at the construction site and shall furnish a copy to the CECONY ***Field Representative*** upon request. The log shall also include receipts and notices of complaints. CECONY reserves the right to concurrently monitor any construction vibration levels. A preconstruction survey documenting the existing condition of the Transmission Electric Facilities to be monitored shall be conducted by the Contractor.

3.4 ***Transmission Electric Facility*** Support Design Criteria

3.4.1 Any and all materials/means used to hang, support, and/or protect the Transmission Electric Facility pipes must maintain the integrity of the pipe

Paper copies of the Engineering Operations Manual are uncontrolled and therefore may be outdated. Please verify that you have the current version prior to use by viewing the Central Engineering website (http://ceng/).

coating. Any and all damage to the coating must be reported to the CECONY representative on site; and no backfilling of the pipe can be performed until pipe coating is restored and inspected.

3.4.2 Prior to any Transmission Electric Facility pipe support work ***that deviates from the CET manual,*** the Contractor shall submit to CECONY Engineering the following for review and approval:

3.4.2.1 Drawings drawn to scale showing plans, sections and details of pipe support design stamped by a Professional Engineer.

3.4.2.2 Supporting calculations stamped by the Professional Engineer.

3.4.2.3 The design span for Transmission Electric Facility supports shall satisfy the allowable stress and deflection limits in accordance with ASME B31.1 considering both static loads and internal operating pressure. Additional loads due to jacking to move the Transmission Electric Facility pipes shall be accounted for in the support design.

3.4.2.4 Typical Transmission Electric Facility pipe parameters are listed in Exhibit A for calculating design loads for pipe supports.

3.4.2.5 The maximum spacing between supports shall not exceed 10 feet.

3.4.3 Pending a condition assessment of the pipe by CECONY, the Contractor may be allowed to adjust the location and/or elevation of existing Transmission Electric Facility pipes by transitioning the pipes with the minimum required Wingback distances for the required offsets as outline below. ***Wingback distances were computed for high pressure fluid filled (pipe-type) Transmission Electric Facilities only. Refer to drawing 516411 for schematic guideline on relocation of Transmission Electric Facilities.***

Nominal Pipe Size [in]	Minimum Required Wingback [ft]		
	6" Offset	9" Offset	12" Offset
5	88	108	125
6	98	120	138
7 (TUBE)	97	119	137
8	111	136	157
10	129	158	183
12	147	180	208

3.4.4 A work plan detailing the steps and means of moving the pipe shall be submitted to CECONY Engineering for approval. The plan shall identify the incremental sequence and distances to move the pipe in achieving the final offset, a

Paper copies of the Engineering Operations Manual are uncontrolled and therefore may be outdated. Please verify that you have the current version prior to use by viewing the Central Engineering website (http://ceng/).

description of jacks (or other equipment) to move the pipe, their locations and load capacity, and the protective measures that will be employed to not damage the pipe coating.

3.5 Backfill

3.5.1. Prior to backfilling the exposed electric Transmission Electric Facility, CECONY Transmission Operations/Corrosion Control shall be notified to inspect the condition of pipe and repair any areas of corrosion or damaged coating.

3.5.2. Approved material is to be used for backfilling under, adjacent and over the ***Transmission Electric Facilities*** pipe as described in specifications EO-8085 (for general backfill) and CE-TS-4074 (for thermal sand) and as depicted on EO-12640-B. ***345kV transmission feeders must be backfilled with thermal sand and 69 KV and 138kV transmission feeders must be backfilled with clean sand as described by specifications. Contractor must submit a copy of the gradation analysis and test report to CECONY Engineering for approval.***

3.5.3. Reuse of excavated soil may be permitted as approved backfill materials if it conform to the requirements outlined in the Specification, CE-TS-3352, latest revision. Contractor must submit a copy of the gradation analysis and the material must be approved by CECONY prior to its application.

3.5.3.1. ***For CECONY Contractors***, excavated soil must be managed in accordance with the requirements of CECONY GEHSI E05.11 "Management of Excavated Soils on Property Not Owned by the Company", latest revision. Excavated soil cannot be reused as backfill if it does not meet the requirements of the governing GEHSI.

3.5.4. Approved backfill shall be compacted in maximum 12" lifts in accordance with Specification EO-1181, latest revision, unless otherwise approved by CECONY.

3.5.5. ***The CECONY Field Representative may require in-place density tests to ensure proper compaction.***

3.6. SPECIAL NOTES FOR CONSTRUCTION ACTIVITIES

3.6.1. Each party shall use its best efforts to avoid or minimize, to the maximum extent practicable, any adverse environmental effects associated with the construction activities around subsurface Transmission Electric Facilities.

3.6.2. Perform daily job briefings with all employees before each shift, highlighting the hazards associated with working around Transmission Electric Facility and in excavations, i.e. high voltage electrical hazards, high pressure dielectric fluid or nitrogen gas pressure, coal tar pipe coatings, asbestos coating on pipe, work area protections, traffic, cave-ins, etc.

3.6.2.1. In the event that the Transmission Electric Facility pipe displays disturbed or disbonded asbestos coating, stop the work immediately and contact the CECONY Designated Contact for further directions.

Paper copies of the Engineering Operations Manual are uncontrolled and therefore may be outdated. Please verify that you have the current version prior to use by viewing the Central Engineering website (http://ceng/).

□□□□□□□□□□0□□

□□□□□□□□□□□□□□□□0□0□

□□□□6□

3.6.3. Long duration projects must be managed with vigilance to ensure that all employees maintain proper focus regarding the hazards associated with working around the Transmission Electric Facilities.

3.6.4. CECONY shall inspect the exposed Transmission Electric Facility to verify its condition prior to any work being performed. It is Contractor's responsibility to contact CECONY to schedule this inspection.

3.6.5. Any undermined Transmission Electric Facility ten feet or great in span must be supported with sand bags, nylon slings or other approved methods, taking special care to not damage the pipe coating.

3.7. EMERGENCY ACTION PLAN

3.7.1. In the event of emergency, such as pipe cracks, leaks, or breakage, Contractor must notify the CECONY's Designated Contact immediately. All work must stop and cannot proceed until the CECONY field representative has inspected the damage and further direction is provided.

Paper copies of the Engineering Operations Manual are uncontrolled and therefore may be outdated. Please verify that you have the current version prior to use by viewing the Central Engineering website (http://ceng/).

□□□□□□□□□□0□□

□□□□□□□□□□□□□□□0□0□

4.0 EXHIBITS

EXHIBIT A – TYPICAL TRANSMISSION STEEL PIPE/CONDUIT PARAMETERS*

Pipe Size	OD	t	Uniform Weight	Max Operating Pressure	Design Temperature
	[inch]	[inch]	[plf]	[psig]	[°F]
5	5.5625	0.258	22	600	140
6	6.6250	0.280	30	600	140
7 (Tube)	7.0000	0.250	49	400	140
8	8.6250	0.250	68	400	140
10	10.7500	0.250	91	400	140
12	12.7500	0.250	109	400	140

* *Transmission steel pipe parameters described hereon are pipes manufactured in accordance with ASTM A-523 Grade A steel only. For any other materials encountered for during excavation, Contractor shall notify CECONY and request material-specific parameters. Weight includes pipe, cables and oil for 7" pipes and bigger. 5" and 6" pipes are return pipes with no cable inside and the weights include weight of pipe and oil only.*

Paper copies of the Engineering Operations Manual are uncontrolled and therefore may be outdated. Please verify that you have the current version prior to use by viewing the Central Engineering website (http://ceng/).

□□□□□□□□□□0□□

□□□□□□□□□□□□□□□0□0□

5.0 REFERENCES

5.1 State of New York Department of Public Service, 16 NYCRR Part 753 – Protection of Underground Facilities.

5.2 State of New York Department of Public Service, 16 NYCRR Part 101 – Underground Electric Facility Construction.

5.3 New York City Department of Buildings Technical Policy and Procedure Notice #10/88, "Procedures for the Avoidance of Damage to Historic Structures".

5.4 New York State Department of Transportation, Engineering Instruction, EI-05-044, "Special Specification for Building Condition Survey(s) and Vibration monitoring (Non-Blasting)"

5.5 2012 NESC – National Electrical Safety Code, C2-2012, IEEE Standard Association.

5.6 ASME B31.1-2014 ASME Code for Pressure Piping, B31 – Power Piping.

5.7 ASME BPVC.II.D.C-2015, ASME Boiler & Pressure Vessel Code – Section II Materials – Part D – Properties (Customary).

5.8 CECONY Corporate Instruction CI-920-1 – Gas Facilities – Clearances, Encroachments, Interference, and Corrosion.

5.9 CECONY General Environmental Health and Safety Instructions

GEHSI E05.11 "Management of Excavated Soils on Property Not Owned by the Company"

5.10 Central Engineering Drawings and Specifications

CE-ES-3004, "Construction Specification for the Installation of Underground Fiberglass Reinforced Epoxy (FRE) and Polyvinyl Chloride (PVC) Conduits.

CE-TS-3352, "Specification for the Installation of High Pressure Pipe for 69, 138 and 345 kV Cable Systems – Section I General Requirements".

CE-TS-4074, "General Purchase Specification for Controlled Thermal Sand Material for High Pressure Pipe Type Cables".

CE-TS-4197, "General Purchase Specification for Steel Pipe for Electrical Facilities and Casings".

CE-SS-3400, "Specification for the Installation of Civil Material and Equipment – Section III Detail Standard Specification, Part 2200 – Excavation & Backfilling".

EO-12640-B, "H.P. Cable and Dielectric Fluid Circulating Pipe Trenching and Backfill".

Dwg 516411, "Guideline for Permanent Relocation of Feeder Pipes using "Wingback" Method".

Paper copies of the Engineering Operations Manual are uncontrolled and therefore may be outdated. Please verify that you have the current version prior to use by viewing the Central Engineering website (http://ceng/).

5.11 Distribution Engineering Specification

EO-1181, "General Specification For Backfilling Of Trench And Small Openings"

EO-8085, "General Specification for Backfill and Bedding Material for Excavations".

Paper copies of the Engineering Operations Manual are uncontrolled and therefore may be outdated. Please verify that you have the current version prior to use by viewing the Central Engineering website (http://ceng/).

JB 301 - SPECIAL CARE EXCAVATION AND BACKFILLING FOR OIL-O-STATIC PIPES

A. Description

Under this section, the Contractor shall provide all incremental labor, materials, equipment, insurance and incidentals required for trench excavation when maintaining, protecting, and accommodating the integrity of the facility operator's oil-o-static facilities. This system consists of steel pipes containing the high tension cables and cooling oil (oil-o-static pipes) encroaching (partially exposed) or paralleling (not exposed) within 12 inches of the face of the approved city excavations for all phases of contract excavation as encountered during construction, except excavations to the ultimate depth for curbs, sidewalks and roadway/base/subbase which are covered under specific contract items. The work shall be performed in accordance with the contract plans, specifications, attached Sketch JB 301 A and at the directions of the facility operator in consultation with the Resident Engineer.

B. Materials

Backfill material to be used around oil-o-static pipes will be paid for under Item JB-303.

C. Method of Construction

The Contractor shall maintain, protect and accommodate the integrity of oil-o-static pipes encroaching/paralleling excavations as schematically shown on attached Sketch JB 301 A. The facility operator shall identify the locations of oil-o-static pipe(s) within the contract area as required by New York State Industrial Code Rule 753. As provided by the Rule, the Contractor shall use hand excavation methods (pick and shovel or hand held power tools) directly below the pavement base to expose the oil-o-static pipe(s) and ascertain the numerical relationships and/or dimensions of these utilities with respect to the proposed excavation. Upon exposing the affected oil-o-static pipe(s) sufficiently at the sole discretion of the facility operator in consultation with the Resident Engineer to determine relationships and/or dimensions, the Contractor shall be permitted to proceed with hand excavation only, within a zone of protection whose limit shall be defined as a perimeter located 12 inches from the outside face of each oil-o-static encroaching/paralleling.

Some of the existing coatings on oil-o-static pipes and/or return lines may consist of coal tar wrap and may contain asbestos and/or PCB's. Upon completion of hand excavation and unearthing (visual line of sight) of oil-o-static and return lines encroaching/exposed, the Con Edison representative must visually inspect all oil-o-static and return lines that are exposed during the performance of this contract. The Contractor shall notify the Con Edison representative to perform this inspection and subsequent testing where the coating appears to lack integrity. If the visual inspection/tests reveal the presence of asbestos and/or PCB's, the work will be considered "specialty work" and be performed by Con Edison forces or by a specialty contractor hired by Con Edison in accordance with JB 302 and the latest version of G-8209. If any damage to the oil-o-static and/or return lines' field coating is caused by the Contractor, all costs associated with testing, any additional excavation in order to perform "specialty work" and any and all delays incurred shall be at the Contractor's expense. The Contractor will coordinate their operations to

allow this work to be performed. The latest version of Con Edison Gas Operations Standard G-8209, System B will be the only method that will be allowed. The coating shall be verified and accepted by the Con Edison representative prior to backfilling.

D. Method of Measurement

The unit price for this work shall be based on the volume of cubic yard (C.Y.) of special care excavation calculated as follows:

- For paralleling (not exposed) oil-o-static pipe(s) within 12 inches of the outside edge of the approved City trench line, the volume included for payment shall be calculated as the depth from below the existing pavement base to the bottom of the unsheeted trench excavation or to the bottom of the oil-o-static pipe whichever is greater, multiplied by the width, measured as one foot from the face of the excavation toward the center of excavation, multiplied by the length of the parallel oil-o-static line. See Sketch JB 301 A.

- For encroaching (exposed) oil-o-static pipe(s) the volume shall be calculated as the width of the encroachment (facility partially or fully exposed in the trench) plus one foot, multiplied by length of the encroachment, multiplied by the depth as defined above. (See Sketch JB 301 A).

The volume calculation shall in all cases include, the volume occupied by the utility proper within the payment area described above. Overlapping volume dimensions measured as described above may occur when multiple utilities are encroaching trench excavations. In such cases, all such utilities shall be counted as one utility limited by the maximum encroachment of pipes, conduit(s), and conduit banks faces. The volume shall then be calculated as described above and shown on attached Sketch # JB 300 A. Utilities identified as abandoned by the facility operator prior to be beginning of excavation, are not included for payment under this item.

E. Price to Cover

The unit price bid per cubic yard of special care excavation and backfill of oil-o-static pipes shall cover the incremental cost of all incremental labor, material, equipment, insurance and incidentals necessary to completely protect, and maintain, and accommodate the integrity of oil-o-static pipe(s) without disruption of service to the customers and in accordance with contract documents. The unit price shall also include the cost of: difficulties encountered during the performance of contract work items under, over and around the oil-o-statics; installation and removal of sheeting; loss of productivity due to slower rate of excavation (special care) during excavation, including the use of such methods as hand excavation around existing oil-o-static pipe(s); trucking and disposing of unsuitable fill; backfilling and compaction, in compliance with DOT requirements, around, over and under the facilities including the use of special methods; and traffic plates that may be required to temporarily close and/or complete the work.

The price shall cover any costs incurred for the Contractor to coordinate with Con Edison forces or their Specialty Contractor to perform the visual inspection of exposed oil-o-static and return lines and additional excavation that may be required to perform testing if the

existing field coating appears to lack integrity; modification of work methods and/or construction sequencing, any impact with maintenance and protection of traffic, and loss of productivity. Payment for field coating of oil-o-static feeder pipes, as required, shall be covered under JB 302 in accordance with the latest version of G-8209.

F. References

1. Sketch JB-301A
2. Item JB 302
3. Item JB303
4. NYS Industrial Code Rule 753
5. Con Edison Gas Operations Standard G-8209 – Field Coating of Steel Pipe and Fittings Installed Underground and in Subsurface Structures

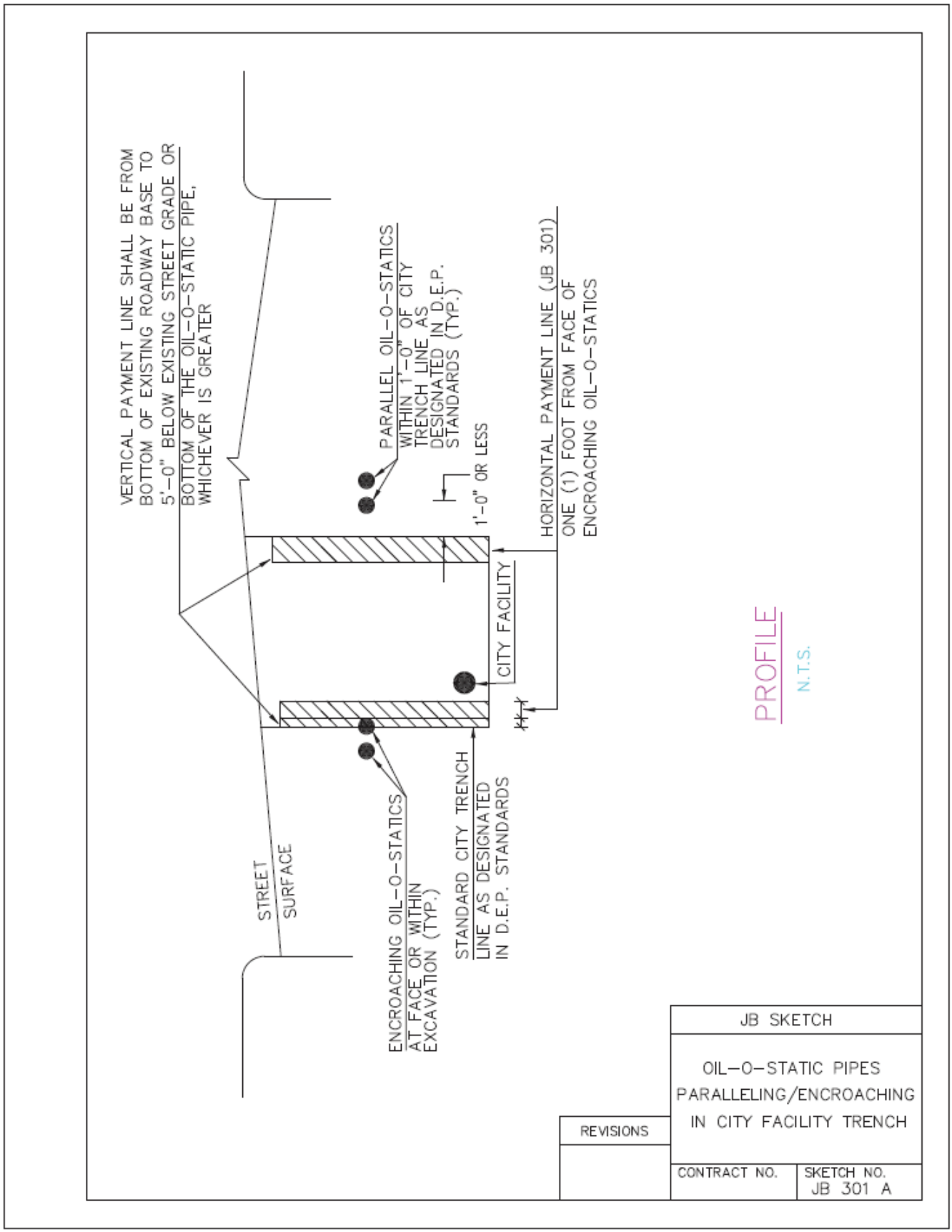
VERTICAL PAYMENT LINE SHALL BE FROM BOTTOM OF EXISTING ROADWAY BASE TO 5'-0" BELOW EXISTING STREET GRADE OR BOTTOM OF THE OIL-O-STATIC PIPE, WHICHEVER IS GREATER
PARALLEL OIL-O-STATICS WITHIN 1'-0" OF CITY TRENCH LINE AS DESIGNATED IN D.E.P. STANDARDS (TYP.)
1'-0" OR LESS
HORIZONTAL PAYMENT LINE (JB 301) ONE (1) FOOT FROM FACE OF ENCROACHING OIL-O-STATICS
CITY FACILITY
STREET SURFACE
ENCROACHING OIL-O-STATICS AT FACE OR WITHIN EXCAVATION (TYP.)
STANDARD CITY TRENCH LINE AS DESIGNATED IN D.E.P. STANDARDS
PROFILE
N.T.S.
JB SKETCH
OIL-O-STATIC PIPES PARALLELING/ENCROACHING IN CITY FACILITY TRENCH
REVISIONS
CONTRACT NO.
SKETCH NO. JB 301 A

JB 302 – FIELD COATING OF OIL-O-STATIC FEEDER PIPES

A. Description

Under this section, the Contractor shall provide all labor, tools, equipment, insurance and incidentals required to apply field coating and wrapping on Oil-O-Static feeder pipes at various locations within the contract limits in accordance with the specifications and as directed by the facility operator. The Oil-O-Static system consists of steel pipes containing high voltage cables and cooling oil. All work shall be in accordance with the Con Edison requirement G-8209, System B.

B. Materials

All materials required to apply coatings and wrappings as referenced in G-8209 shall be supplied by Con Edison.

C. Method of Construction

Some of the existing coatings on Oil-O-Static pipes may consist of coal tar wrap and may contain asbestos and/or PCB's. The Con Edison representative prior to backfilling must visually inspect all Oil-O-Static lines that are exposed during the performance of this contract. The Contractor shall notify the Con Edison representative to perform this inspection. Con Edison shall be allowed to perform an electrical spark test (jeeping) inspection of these pipes and obtain a sample of the coating for testing. The electrical spark test will indicate the amount of coating required to be applied and the sample test will determine the coating materials. If the tests are negative, the Con Edison representative will direct the Contractor to perform the required amount of coating prior to the pipes being backfilled. If the tests reveal the presence of asbestos and/or PCB's, the work will be considered "specialty work" and be performed by Con Edison forces or by a specialty Contractor hired by Con Edison. The Contractor will coordinate his operations to allow this work to be performed. The work shall be performed in accordance with Con Edison specification G-8209, which is included within this section. System B will be the only method that will be allowed. The coating shall be verified and accepted by the Con Edison representative prior to backfilling.

D. Method of Measurement

The quantity to be measured for payment shall the actual number of linear feet (L.F.) of each Oil-O-Static pipe for which coating is applied by the Contractor as prescribed.

E. Price to Cover

The price shall cover the cost of all labor, tools, equipment, insurance and incidentals necessary to unload, store and handle the necessary material and to perform all associated work to coat and wrap the Oil-O-Static lines as outlined in Con Edison specification G-8209, System B. The price shall also include the cost of all difficulties encountered to apply the coating in the area of other underground facilities and the additional excavation that may be required to obtain the necessary clearances to apply the coating; coordination with Con Edison forces or their Specialty Contractor; modifications to work methods or construction sequencing, any impact with maintenance and protection of traffic, and loss of productivity. Payment for all work herein specified shall be made on a one-time basis only; no payment for work herein specified shall be made for the same area more than one time. If the Contractor subsequently damages any

coatings paid for under this contract, the pipe shall be recoated in accordance with this item at the Contractor's expense.

F. References

1. Con Edison Gas Operations Standard G-8209 – Field Coating of Steel Pipe and Fittings Installed Underground and in Subsurface Structures

JB 400 - TEST PITS FOR UTILITY FACILITIES

A. Description

Under this section, the Contractor shall furnish all labor, materials, equipment, insurance and incidentals necessary to excavate, sheet and maintain test pits at locations approved by the facility operator in consultation with the Resident Engineer. Test pits shall be dug in order to ascertain exact locations, cover, and invert elevations, configurations, clearances, alignment and operating status of existing utility facilities. The contractor shall inspect jointly with the facility operator and Resident Engineer, utility facilities and other structures uncovered, take all relevant measurements and elevations as directed by the facility operator(s) in consultation with the Resident Engineer. Tests to determine operating status of utility facilities shall be performed by facility operator. The pits shall be covered with steel plates during non-working hours, and uncovered, as required, until the inspection work is completed. Testing of utility facilities may require a maximum of 4 hours. Then, the pits shall be backfilled with clean fill, and resurfaced with temporary pavement. All traffic shall be maintained and all safety measures as stipulated shall be complied with.

B. Materials – N/A

C. Methods of Construction

1. Excavation – Existing pavement to be removed shall be neatly cut along lines of removal with a saw or other approved equipment which leaves a neat straight joint line along the juncture with subsequently replaced pavement. Excavation in the vicinity of utilities and other structures shall be performed using hand tools. Use of hand operated pneumatic and electric jackhammers will be permitted only for breaking pavement and removal of masonry, concrete and boulders, or as otherwise directed by the facility operator in consultation with the Resident Engineer. All materials excavated from test pits shall be properly disposed of away from site by the contractor. Test pits shall be excavated at locations as directed by the facility operator in consultation with the Resident Engineer. All test pits shall be excavated to a depth and size necessary to locate the existing facilities. All facilities that are encountered during the excavation of the test pit shall be supported and protected in a manner suitable to the facility operator. Sheeting shall be used when depth of excavation exceeds five feet. The sheeting required should be furnished and installed in full compliance with the State of New York and Federal Safety Codes requirements and as specified in contract, whichever is more stringent.

Care shall be taken that no existing utility facilities or other structures are broken or damaged. All broken or damaged facilities shall be reported immediately to facility operator who shall decide whether such facilities shall be repaired or replaced by company forces or by City contractor. Contractor shall excavate all material encountered, including large masses of concrete, cemented masonry and boulders, as directed by the facility operator. Any type of excavation protection used shall satisfy the following:

- Industrial Code Rule 753.
- Prevent injury to workers and the public, and avoid damage to existing utility facilities and structures, and to pavements and their foundations, from caving or sliding banks within the excavation.

Some of the existing coatings on oil-o-static pipes and/or return lines may consist of coal tar wrap and may contain asbestos and/or PCB's. Upon completion of hand excavation and unearthing (visual line of sight) of oil-o-static and return lines encroaching/exposed, the Con Edison representative must visually inspect all oil-o-static and return lines that are exposed during the performance of this contract. The Contractor shall notify the Con Edison representative to perform this inspection and subsequent testing where the coating appears to lack integrity. If the visual inspection/tests reveal the presence of asbestos and/or PCB's, the work will be considered "specialty work" and be performed by Con Edison forces or by a specialty Contractor hired by Con Edison in accordance with JB 302 and the latest version of G-8209. If any damage to the oil-o-static and/or return lines' field coating is caused by the Contractor, all costs associated with testing, any additional excavation in order to perform "specialty work" and any and all delays incurred shall be at the Contractor's expense. The Contractor will coordinate their operations to allow this work to be performed. The latest version of Con Edison Gas Operations Standard G-8209, System B will be the only method that will be allowed. The coating shall be verified and accepted by the Con Edison representative prior to backfilling.

2. Maintenance of Test Pits - Excavated test pits shall be maintained free of debris and kept dry by the contractor in order to permit the inspection and measurements and to determine the locations of facilities. In order to accomplish this, contractor shall, upon completion of excavation and placement of sheeting (if depth greater than five feet), furnish and install adequate steel plates and posting over the excavated pits and shall temporarily remove all equipment debris and workers, and relocate barricades in order to open the full width of street to traffic during non-working hours. The contractor shall then, at no additional cost, relocate such barricades barrels, cones and other warning devices and remove steel plates, as and when directed by the facility operator in consultation with the Resident Engineer to facilitate the inspection of exposed facilities. When work is being performed and the pits are not covered with steel plates, the contractor shall provide complete and safe access to the test pits as may be required, and he shall provide construction barricades and maintain traffic at all times as shown or as directed by the facility operator in consultation with the Resident Engineer. Upon completion of test pit inspection by the facility operator, the pit shall be backfilled by the contractor in accordance with Contract requirements and all backfill material shall conform to contract specifications for such purpose.

3. Pavement and Sidewalk Restoration - After backfilling is completed, the contractor shall construct a temporary pavement consisting of six inches (6") thick asphaltic concrete mixture in roadway areas or a two inches (2") thick asphaltic concrete mixture in sidewalk areas in order to maintain existing pedestrian and vehicular traffic. This temporary pavement shall be maintained until permanent replacement as specified in contract.

D. Method of Measurement

The quantity to be measured for payment shall be the number of cubic yards of material removed from within the limits of the pit dimensions as directed by the facility operator in consultation with the Resident Engineer. The volume occupied by existing pipes or other structures remaining within the maximum payment lines will not be deducted from the total volume measured except, where the cross sectional area of these facilities exceeds

four (4) square feet. As determined by the facility operator(s) in consultation with the Resident Engineer, the quantity measured for payment may be proportionated among the facility operator(s) involved in total volume excavated.

E. Price to Cover

The unit price bid per cubic yards for test pits shall cover all costs of labor, material, equipment, insurance and incidentals required to excavate test pits, including removal and disposal of excavated materials, sheeting, steel plating, all associated maintenance of traffic, backfill and compaction, in compliance with DOT requirements, all in accordance with the specifications and at the direction of the facility operator in consultation with the Resident Engineer. The price shall also cover the cost of providing temporary pavements and sidewalks. The price shall also include the cost of providing safe access to the excavation by facility operator for the performance of certain test to determine operating status of utility facilities prior to City work. The price shall also include the necessary support and protection of all utility facilities crossing, paralleling and /or encroaching the test pit excavation.

The price shall cover any costs incurred for the Contractor to coordinate with Con Edison forces or their Specialty Contractor to perform the visual inspection of exposed oil-o-static and return lines and additional excavation that may be required to perform testing if the existing field coating appears to lack integrity; modification of work methods and/or construction sequencing, any impact with maintenance and protection of traffic, and loss of productivity. Payment for field coating of oil-o-static feeder pipes, as required, shall be covered under JB 302 in accordance with the latest version of G-8209.

F. References

1. NYS Industrial Code Rule 753
2. Item JB 302
3. Con Edison Gas Operations Standard G-8209 – Field Coating of Steel Pipe and Fittings Installed Underground and in Subsurface Structures

JB 400A – SURVEYED AND DRAFTED TEST PITS FOR UTILITY FACILITIES

A. Description

Under this section, the Contractor shall furnish all labor, materials, equipment, insurance and incidentals necessary to hand excavate utilizing pneumatic tools, sheet and maintain test pits at locations approved by the facility operator in consultation with the Resident Engineer. Test pits shall be dug in order to ascertain exact locations, cover, and invert elevations, configurations, clearances, alignment and operating status of existing utility facilities. A privately licensed NYS Land Surveyor, contracted by the Contractor, shall survey the test pit using surveying equipment, take all relevant measurements and elevations as directed by the facility operator(s) in consultation with the Resident Engineer, and draft findings using AutoCAD. The contractor shall inspect jointly with the facility operator and Resident Engineer, utility facilities and other structures uncovered. Tests to determine operating status of utility facilities shall be performed by facility operator. The pits shall be covered with steel plates during non-working hours, and uncovered, as required, until the inspection work is completed. Then, the pits shall be backfilled with clean fill, and resurfaced with temporary pavement. All traffic shall be maintained and all safety measures as stipulated shall be complied with.

B. Materials

A licensed NYS surveyor will provide signed and sealed test pit results using surveying equipment and reference the Borough of Manhattan, Downtown horizontal datum and NAVD88 vertical datum to correspond directly with design drawings. Surveyed test pits shall be delivered in PDF and AutoCAD formats.

C. Methods of Construction

1. Excavation – Existing pavement to be removed shall be neatly cut along lines of removal with a saw or other approved equipment which leaves a neat straight joint line along the juncture with subsequently replaced pavement. Excavation in the vicinity of utilities and other structures shall be performed using hand tools. Use of hand operated pneumatic and electric jackhammers will be permitted only for breaking pavement and removal of masonry, concrete and boulders, or as otherwise directed by the facility operator in consultation with the Resident Engineer. All materials hand excavated from test pits shall be properly disposed of away from site by the contractor. Test pits shall be hand excavated at locations as directed by the facility operator in consultation with the Resident Engineer. All test pits shall be hand excavated to a depth and size necessary to locate the existing facilities. All facilities that are encountered during the excavation of the test pit shall be supported and protected in a manner suitable to the facility operator. Sheeting shall be used when depth of excavation exceeds five feet. The sheeting required should be furnished and installed in full compliance with the State of New York and Federal Safety Codes requirements and as specified in contract, whichever is more stringent.

Care shall be taken that no existing utility facilities or other structures are broken or damaged. All broken or damaged facilities shall be reported immediately to facility operator who shall decide whether such facilities shall be repaired or replaced by company forces or by City contractor. Contractor shall hand excavate all material encountered, including large masses of concrete, cemented masonry and boulders, as directed by the facility operator. Any type of excavation protection used shall satisfy the following:

- Industrial Code Rule 753.
- Prevent injury to workers and the public, and avoid damage to existing utility facilities and structures, and to pavements and their foundations, from caving or sliding banks within the excavation.

Some of the existing coatings on oil-o-static pipes and/or return lines may consist of coal tar wrap and may contain asbestos and/or PCB's. Upon completion of hand excavation and unearthing (visual line of sight) of oil-o-static and return lines encroaching/exposed, the Con Edison representative must visually inspect all oil-o-static and return lines that are exposed during the performance of this contract. The Contractor shall notify the Con Edison representative to perform this inspection and subsequent testing where the coating appears to lack integrity. If the visual inspection/tests reveal the presence of asbestos and/or PCB's, the work will be considered "specialty work" and be performed by Con Edison forces or by a specialty Contractor hired by Con Edison in accordance with JB 302 and the latest version of G-8209. If any damage to the oil-o-static and/or return lines' field coating is caused by the Contractor, all costs associated with testing, any additional excavation in order to perform "specialty work" and any and all delays incurred shall be at the Contractor's expense. The Contractor will coordinate their operations to allow this work to be performed. The latest version of Con Edison Gas Operations Standard G-8209, System B will be the only method that will be allowed. The coating shall be verified and accepted by the Con Edison representative prior to backfilling.

2. Maintenance of Test Pits – Hand excavated test pits shall be maintained free of debris and kept dry by the contractor in order to permit the inspection and measurements and to determine the locations of facilities. In order to accomplish this, contractor shall, upon completion of excavation and placement of sheeting (if depth greater than five feet), furnish and install adequate steel plates and posting over the hand excavated pits and shall temporarily remove all equipment debris and workers, and relocate barricades in order to open the full width of street to traffic during non-working hours. The contractor shall then, at no additional cost, relocate such barricades barrels, cones and other warning devices and remove steel plates, as and when directed by the facility operator in consultation with the Resident Engineer to facilitate the inspection of exposed facilities. When work is being performed and the pits are not covered with steel plates, the contractor shall provide complete and safe access to the test pits as may be required, and he shall provide construction barricades and maintain traffic at all times as shown or as directed by the facility operator in consultation with the Resident Engineer. Upon completion of test pit inspection by the facility operator, the pit shall be backfilled by the contractor in accordance with Contract requirements and all backfill material shall conform to contract specifications for such purpose.

3. Pavement and Sidewalk Restoration - After backfilling is completed, the contractor shall construct a temporary pavement consisting of six inches (6") thick asphaltic concrete mixture in roadway areas or a two inches (2") thick asphaltic concrete mixture in sidewalk areas in order to maintain existing pedestrian and vehicular traffic. This temporary pavement shall be maintained until permanent replacement as specified in contract.

D. <u>Method of Measurement</u>

The quantity to be measured for payment shall be the number of cubic yards of material removed from within the limits of the pit dimensions as directed by the facility operator in consultation with the Resident Engineer. The volume occupied by existing pipes or other

structures remaining within the maximum payment lines will not be deducted from the total volume measured except, where the cross sectional area of these facilities exceeds four (4) square feet. As determined by the facility operator(s) in consultation with the Resident Engineer, the quantity measured for payment may be proportionated among the facility operator(s) involved in total volume hand excavated.

E. Price to Cover

The unit price bid per cubic yards for test pits shall cover all costs of labor, material, equipment, insurance and incidentals required to hand excavate test pits, including removal and disposal of hand excavated materials, sheeting, steel plating, all associated maintenance of traffic, backfill (paid under the appropriate City items) and compaction, in compliance with DOT requirements, all in accordance with the specifications and at the direction of the facility operator in consultation with the Resident Engineer. The price shall also cover the cost of providing temporary pavements and sidewalks. The price shall also include the cost of providing safe access to the excavation by facility operator for the performance of certain test to determine operating status of utility facilities prior to City work. The price shall also include the necessary support and protection of all utility facilities crossing, paralleling and /or encroaching the test pit excavation.

The price shall cover any costs incurred for the Contractor to coordinate with Con Edison forces or their Specialty Contractor to perform the visual inspection of exposed oil-o-static and return lines and additional excavation that may be required to perform testing if the existing field coating appears to lack integrity; modification of work methods and/or construction sequencing, any impact with maintenance and protection of traffic, and loss of productivity. Payment for field coating of oil-o-static feeder pipes, as required, shall be covered under JB 302 in accordance with the latest version of G-8209.

F. References

1. NYS Industrial Code Rule 753
2. Item JB 302
3. Con Edison Gas Operations Standard G-8209 – Field Coating of Steel Pipe and Fittings Installed Underground and in Subsurface Structures

JB 401 - TRENCH EXCAVATION FOR ADJUSTMENT OF UTILITY FACILITIES

A. Description

Under this section, the Contractor shall provide all labor, materials, equipment, insurance and incidentals required to excavate by hand to locate and expose subsurface utilities encountered during construction in preparation for horizontal and vertical movement (covered by other Sections), and to support and maintain and protect the integrity of utility facilities including but not limited to:

1. Conduits;
2. Conductor(s) and/or cable(s);
3. Concrete Encased Conduit Bank(s);
4. Steel Pipe(s);
5. Electric transmission facilities.

The trench to be excavated shall be determined by the size of the utility and the extent of adjustment required to avoid interferences as detailed on Sketch JB 402 A during all phases of contract work. The work shall be performed in accordance with the specifications, and at the directions of the facility operator in consultation with the Resident Engineer.

B. Materials

All materials used to support and maintain and protect shall be similar to those indicated on Sketches JB 100 A and 100 A-1 and shall be supplied by the Contractor and be approved by the facility operator in consultation with the Resident Engineer.

C. Methods of Construction

The Contractor shall cut, break and remove various thickness of surface and base pavement, excavate by hand to expose, support and protect all utility facilities within the trench and then furnish and tamp backfill after work has been completed by the parties indicated under other Sections. The facility operator(s) shall identify the locations of all utilities within the contract area as required by New York State Industrial Code Rule 753. As provided by the Rule, the Contractor shall use hand excavation methods (pick and shovel or hand held power tools) directly below the pavement base to expose the utility. Upon exposing the affected utilities sufficiently to determine relationships and/or clearances at the sole discretion of the facility operator in consultation with the Resident Engineer, the Contractor shall be permitted to proceed with a combination of hand and machine excavation sufficiently to wingback all interferences of cable and conduit. The trench shall be adjusted so as to provide a nominal cover of 24" over the highest conduit. The width of the trench shall be as directed by the facility operator in consultation with the Resident Engineer. The bottom of the trench shall be graded smooth and tamped to minimize initial settlement and to avoid "point" support of conduits. All stones projecting into the trench bottom shall be removed, and the voids backfilled before conduits are placed. Where streets are not to final grade, the cover shall be measured from the final grade, or the existing grade, whichever provides the deeper trench.

Some of the existing coatings on oil-o-static pipes and/or return lines may consist of coal tar wrap and may contain asbestos and/or PCB's. Upon completion of hand excavation and unearthing (visual line of sight) of oil-o-static and return lines encroaching/exposed, the Con Edison representative must visually inspect all oil-o-static and return lines that are exposed during the performance of this contract. The Contractor shall notify the Con Edison representative to perform this inspection and subsequent testing where the coating appears to lack integrity. If the visual inspection/tests reveal the presence of asbestos and/or PCB's, the work will be considered "specialty work" and be performed by Con Edison forces or by a specialty Contractor hired by Con Edison in accordance with JB 302 and the latest version of G-8209. If any damage to the oil-o-static and/or return lines' field coating is caused by the Contractor, all costs associated with testing, any additional excavation in order to perform "specialty work" and any and all delays incurred shall be at the Contractor's expense. The Contractor will coordinate their operations to allow this work to be performed. The latest version of Con Edison Gas Operations Standard G-8209, System B will be the only method that will be allowed. The coating shall be verified and accepted by the Con Edison representative prior to backfilling.

D. Method of Measurement

The Contractor shall be paid per cubic yard (C.Y.) of trench actually excavated to the limits directed as detailed in Sketch JB 402 A and to the satisfaction of the facility operator in consultation with the Resident Engineer. When two or more utility facilities requiring horizontal or vertical adjustment with different owners are in the same trench, the facility operators shall jointly determine the percentage of ownership of the trench.

E. Price to Cover

The unit price bid per cubic yard for excavation shall include the cost of all labor, materials, equipment, insurance, and incidentals necessary to completely expose, support and protect and maintain the integrity of the facilities without disruption of service to the customers and in accordance with the Contract Documents, associated maintenance of traffic, and traffic plates and sheeting that may be required, cut, break and remove various thickness of surface and base pavement, excavate by hand to expose existing structures, furnish, place and tamp backfill after required vertical and/or horizontal adjustments have been completed under other Sections. Any required removing, trucking, storing, and disposing of material shall be deemed included in the unit price. The unit price shall also include the cost of providing temporary pavement restoration. Permanent pavement restoration shall be paid under other items. The cost for supporting and protecting all other utilities encountered including the installation of slings and beams installed for utility support shall be paid under other applicable items, if required.

The price shall cover any costs incurred for the Contractor to coordinate with Con Edison forces or their Specialty Contractor to perform the visual inspection of exposed oil-o-static and return lines outside the carbon fiber wrap limits and additional excavation that may be required to perform testing if the existing field coating appears to lack integrity; modification of work methods and/or construction sequencing, any impact with maintenance and protection of traffic, and loss of productivity. Payment for field coating

of oil-o-static feeder pipes, as required, shall be covered under JB 302 in accordance with the latest version of G-8209.

F. References

1. NYS Industrial Code Rule 753
2. Sketch JB 100 A and A-1
3. Sketch JB 402 A
4. Item JB 302
5. Con Edison Gas Operations Standard G-8209 – Field Coating of Steel Pipe and Fittings Installed Underground and in Subsurface Structures

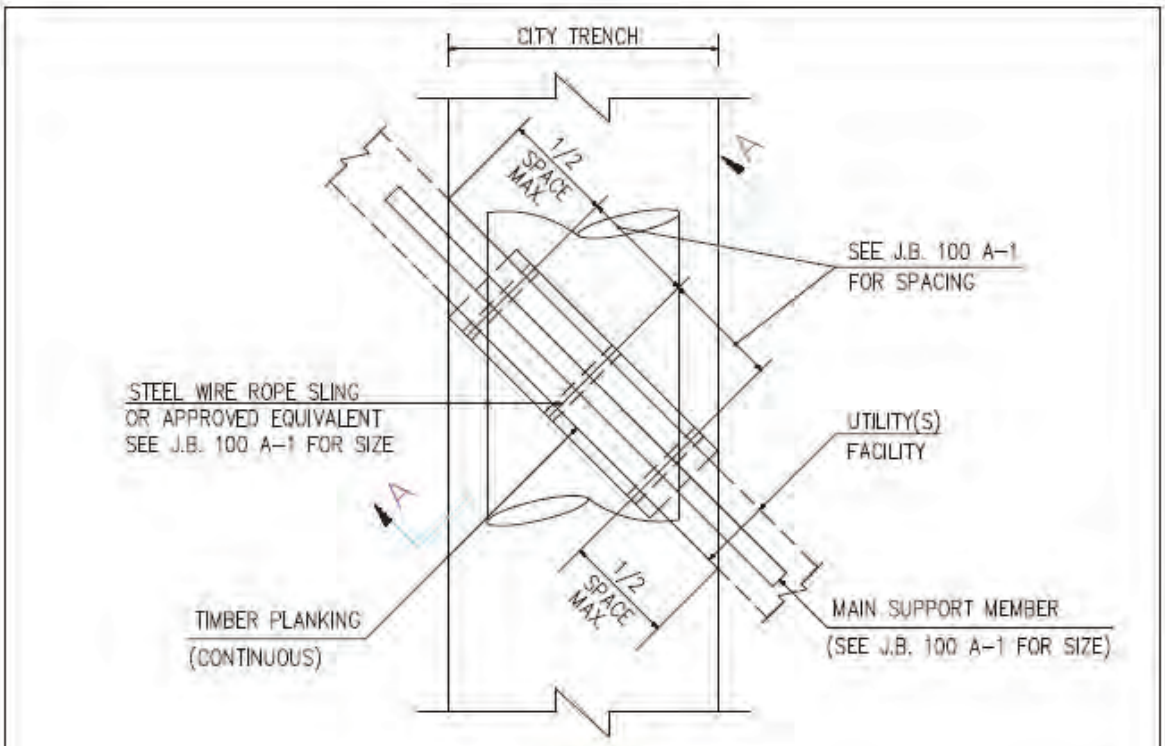

PLAN

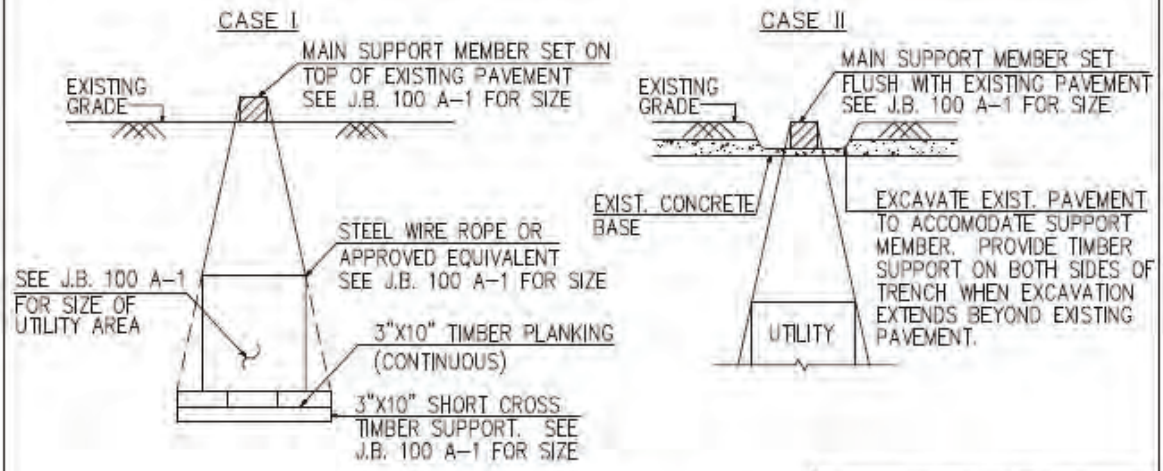

SECTION A–A

NOTE:
VARIOUS ANGLES AND DEPTH ARE AS DEFINED IN ITEM J.B. 100–116.

REVISIONS	J.B. SKETCH
	TEMPORARY SUPPORT OF UTILITY(S) CROSSING CITY TRENCH
	CONTRACT NO. / SKETCH NO. J.B. 100 A

WATER/ SEWER DIAM.	CROSS SECTION AREA OF PRIVATE UTILITIES	INTERMEDIATE SUPPORT SLING ♦		NUMBER OF MAIN TIMBER SUPPORT MEMBERS				MAIN STEEL SUPPORT MEMBERS	TIMBER SHORT SIZE SEE NOTE 1
		NUMBER REQUIRED	UTILITY SUPPORT LENGTH	4" X 4"	4" X 8"	3" X 10"	4" X 12"	1 REQUIRED	1 PER SLING
D<12"	A≤0.75 S.F.	1	7.1 FT	1	–	–	–	W 4 X 13	2" X 4"
	0.75<A≤2.00 S.F.	2	7.1 FT	–	1	–	–	W 6 X 15	3" X 4"
	2.00<A≤6.00 S.F.	3	7.1 FT	–	–	2	–	W 6 X 15	4" X 4"
	6.00<A≤10.0 S.F.	4	7.1 FT	–	–	3	–	W 8 X 18	3" X 10"
	10.0<A≤15.0 S.F.	4	7.1 FT	–	–	–	2	W 6 X 25	3" X 10"
	15.0<A≤20.0 S.F.	4	7.1 FT	–	–	–	3	W 6 X 25	4" X 10"
	>20.0 S.F.	(METHOD OF SUPPORT TO BE SUBMITTED BY CONTRACTOR AND APPROVED BY FACILITY OPERATOR)							
12"<D≤24"	≤0.75 S.F.	1	8.5 FT	2	–	–	–	W 4 X 13	2" X 4"
	0.75<A≤2.00 S.F.	2	8.5 FT	–	1	–	–	W 6 X 15	3" X 4"
	2.00<A≤6.00 S.F.	4	8.5 FT	–	–	3	–	W 6 X 15	4" X 4"
	6.00<A≤10.0 S.F.	5	8.5 FT	–	–	4	–	W 8 X 18	3" X 10"
	10.0<A≤15.0 S.F.	5	8.5 FT	–	–	–	3	W 6 X 25	3" X 10"
	15.0<A≤20.0 S.F.	5	8.5 FT	–	–	–	4	W 6 X 25	4" X 10"
	>20.0 S.F.	(METHOD OF SUPPORT TO BE SUBMITTED BY CONTRACTOR AND APPROVED BY FACILITY OPERATOR)							
24"<D≤36"	A≤0.75 S.F.	1	9.9 FT	2	–	–	–	W 4 X 13	2" X 4"
	0.75<A≤2.00 S.F.	3	9.9 FT	–	1	–	–	W 6 X 15	3" X 4"
	2.00<A≤6.00 S.F.	4	9.9 FT	–	–	3	–	W 8 X 18	4" X 4"
	6.00<A≤10.0 S.F.	6	9.9 FT	–	–	5	–	W 8 X 18	3" X 10"
	10.0<A≤15.0 S.F.	6	9.9 FT	–	–	–	4	W 6 X 25	3" X 10"
	15.0<A≤20.0 S.F.	6	9.9 FT	–	–	–	5	W 8 X 31	4" X 10"
	>20.0 S.F.	(METHOD OF SUPPORT TO BE SUBMITTED BY CONTRACTOR AND APPROVED BY FACILITY OPERATOR)							
36"<D≤48"	A≤0.75 S.F.	2	11.3 FT	3	–	–	–	W 4 X 13	2" X 4"
	0.75<A≤2.00 S.F.	3	11.3 FT	–	2	–	–	W 6 X 15	3" X 4"
	2.00<A≤6.00 S.F.	5	11.3 FT	–	–	4	–	W 8 X 18	4" X 4"
	6.00<A≤10.0 S.F.	7	11.3 FT	–	–	7	–	W 8 X 18	3" X 10"
	10.0<A≤15.0 S.F.	7	11.3 FT	–	–	–	5	W 8 X 31	3" X 10"
	15.0<A≤20.0 S.F.	7	11.3 FT	–	–	–	7	W 8 X 31	4" X 10"
	>20.0 S.F.	(METHOD OF SUPPORT TO BE SUBMITTED BY CONTRACTOR AND APPROVED BY FACILITY OPERATOR)							
48"<D≤54"	A≤0.75 S.F.	2	12.0 FT	3	–	–	–	W 4 X 13	2" X 4"
	0.75<A≤2.00 S.F.	3	12.0 FT	–	2	–	–	W 6 X 15	3" X 4"
	2.00<A≤6.00 S.F.	5	12.0 FT	–	–	5	–	W 8 X 18	4" X 4"
	6.00<A≤10.0 S.F.	7	12.0 FT	–	–	8	–	W 8 X 18	3" X 10"
	10.0<A≤15.0 S.F.	7	12.0 FT	–	–	–	6	W 8 X 31	3" X 10"
	15.0<A≤20.0 S.F.	7	12.0 FT	–	–	–	7	W 10 X 33	4" X 10"
	>20.0 S.F.	(METHOD OF SUPPORT TO BE SUBMITTED BY CONTRACTOR AND APPROVED BY FACILITY OPERATOR)							
** 54"<D≤60"	A≤0.75 S.F.	2	12.7 FT	3	–	–	–	W 4 X 13	2" X 4"
	0.75<A≤2.00 S.F.	4	12.7 FT	–	2	–	–	W 6 X 15	3" X 4"
	2.00<A≤6.00 S.F.	6	12.7 FT	–	–	5	–	W 8 X 18	4" X 4"
	6.00<A≤10.0 S.F.	8	12.7 FT	–	–	9	–	W 8 X 18	3" X 10"
	10.0<A≤15.0 S.F.	8	12.7 FT	–	–	–	6	W 8 X 31	3" X 10"
	15.0<A≤20.0 S.F.	8	12.7 FT	–	–	–	8	W 10 X 33	4" X 10"
	>20.0 S.F.	(METHOD OF SUPPORT TO BE SUBMITTED BY CONTRACTOR AND APPROVED BY FACILITY OPERATOR)							
60"<D≤72"	A≤0.75 S.F.	2	14.1 FT	4	–	–	–	W 4 X 13	2" X 4"
	0.75<A≤2.00 S.F.	4	14.1 FT	–	2	–	–	W 6 X 15	3" X 4"
	2.00<A≤6.00 S.F.	7	14.1 FT	–	–	6	–	W 8 X 18	4" X 4"
	6.00<A≤10.0 S.F.	9	14.1 FT	–	–	10	–	W 8 X 31	3" X 10"
	10.0<A≤15.0 S.F.	9	14.1 FT	–	–	–	8	W 10 X 45	3" X 10"
	‡‡15.0<A≤20.0 S.F.	9	14.1 FT	–	–	–	10	W 10 X 45	4" X 10"
	>20.0 S.F.	(METHOD OF SUPPORT TO BE SUBMITTED BY CONTRACTOR AND APPROVED BY FACILITY OPERATOR)							
72"<D≤84"	A≤0.75 S.F.	2	15.5 FT	5	–	–	–	W 4 X 13	2" X 4"
	0.75<A≤2.00 S.F.	5	15.5 FT	–	3	–	–	W 6 X 15	3" X 4"
	2.00<A≤6.00 S.F.	7	15.5 FT	–	–	8	–	W 8 X 18	4" X 4"
	6.00<A≤10.0 S.F.	10	15.5 FT	–	–	12	–	W 8 X 31	3" X 10"
	10.0<A≤15.0 S.F.	10	15.5 FT	–	–	–	9	W 10 X 45	3" X 10"
	15.0<A≤20.0 S.F.	10	15.5 FT	–	–	–	12	W 10 X 45	4" X 10"
	>20.0 S.F.	(METHOD OF SUPPORT TO BE SUBMITTED BY CONTRACTOR AND APPROVED BY FACILITY OPERATOR)							
> 84"	A≤0.75 S.F.	2	15.5 FT	5	–	–	–	W 4 X 13	2" X 4"
	0.75<A≤2.00 S.F.	5	15.5 FT	–	3	–	–	W 6 X 15	3" X 4"
	2.00<A≤6.00 S.F.	7	15.5 FT	–	–	8	–	W 8 X 18	4" X 4"
	6.00<A≤10.0 S.F.	10	15.5 FT	–	–	12	–	W 8 X 31	3" X 10"
	10.0<A≤15.0 S.F.	10	15.5 FT	–	–	–	9	W 10 X 45	3" X 10"
	15.0<A≤20.0 S.F.	10	15.5 FT	–	–	–	12	W 10 X 45	4" X 10"
	>20.0 S.F.	(METHOD OF SUPPORT TO BE SUBMITTED BY CONTRACTOR AND APPROVED BY FACILITY OPERATOR)							

NOTES

1. TIMBER SHORT CROSS SIZE SUPPORTING 3"x10" CONTINUOUS TIMBER PLANKS
2. THIS SKETCH SHALL NOT BE USED FOR COMPUTATION OF PAYMENT LINES. FOR PAYMENT SEE J.B. SKETCH 100E.

♦ SLING SHALL BE 2" WIDE NYLON STRAP OR EQUIVALENT (SLING CAPACITY SHALL BE 6,000 LBS.) ONE (1) TIMBER SHORT CROSS REQUIRED AT EACH SLING SUPPORTING 3"x10" CONTINUOUS TIMBER PLANKS.

ASSUMPTIONS

1. ASSUME CROSS SECTION AREAS ARE SOLID CONCRETE AT 150lb./C.F.
2. ASSUME ALLOWABLE BENDING STRESS FOR TIMBER MEMBERS IS 1200 PSI.
3. ASSUME ALLOWABLE TIMBER SHEER STRESS IS 90 PSI.
4. ASSUME ALLOWABLE SHEAR STRESS FOR STEEL MEMBERS IS 1000 PSI.

** ALSO APPLIES FOR 9'x9' EXCAVATIONS FOR CATCHBASINS UNDER ITEM J.B. 225

REVISIONS

J.B. SKETCH

SUPPORT REQUIREMENTS FOR PRIVATE UTILITY CROSSING ITEMS (PLAN & SECTION A–A SKETCH NO. 100 A)

CONTRACT NO.	SKETCH NO. J.B. 100 A–1

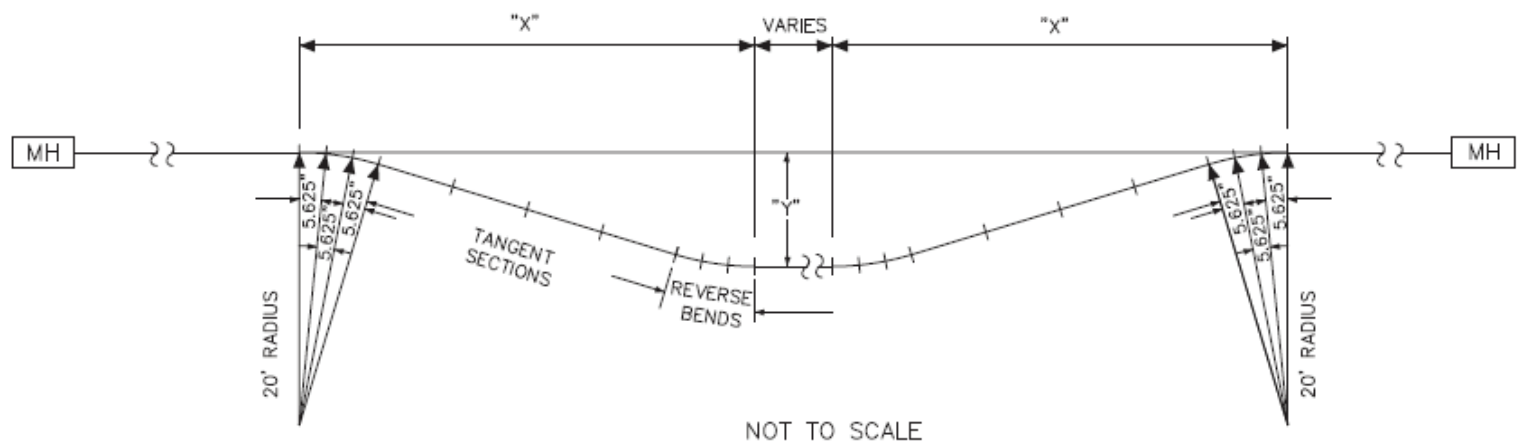

NOT TO SCALE

"Y" OFFSET OF DUCT AXIS	COMBINATION OF 20' RADIUS–BEND SECTIONS AND TANGENT SECTIONS			"X" HORIZONTAL & VERTICAL DISTANCE FROM START OF OFFSET TO POINT OF MAXIMUM OFFSET
	BEND	TANGENT	REV. BEND	
0.8 FEET	2	0	2	7.8 FEET
1.7 FEET	3	0	3	11.6 FEET
2.9 FEET	3	1	3	15.4 FEET
4.1 FEET	3	2	3	19.3 FEET
5.2 FEET	3	3	3	23.1 FEET
6.4 FEET	3	4	3	26.9 FEET

BEND SECTIONS ARE 20' RADIUS, 5' 5/8" LONG.
TANGENT SECTIONS ARE 4' LONG STRAIGHT.

REVISIONS

J.B. SKETCH

HORIZONTAL/VERTICAL ADJUSTMENTS FOR ELECTRIC

CONTRACT NO.

SKETCH NO. J.B. 402 A

PROJECT ID: M

JB 402B – HORIZONTAL AND VERTICAL ADJUSTMENT OF ELECTRIC TRANSMISSION FACILITIES TO FINAL POSITION

A. Description

Under this section, Con Edison or an approved contractor approved by Con Edison shall provide all labor, materials, equipment, insurance and incidentals necessary and required to adjust, support, protect, maintain, and accommodate the integrity of transmission facilities, including but not limited to:

1. Oil-o-Static pipes;
2. Return lines;
3. Freeze lines;
4. Fuel lines.

The work shall be performed in accordance with the latest version of CE-SI-1080, Guidelines for Protecting Existing Underground Transmission Electric Facilities from Nearby Construction Activities and at the direction of the facility operator in consultation with the Resident Engineer.

Contractor to refer to section 3.6 of the latest version of CE-SI-1080 for special notes for construction activities.

Contractor to refer to section 3.7 of the latest version of CE-SI-1080 for emergency action plan.

B. Materials

Any and all materials/means used to hang, support and/or protect the transmission facilities must maintain the integrity of the pipe coating. Any and all damage to the coating must be reported to the Con Edison representative on site; and no backfilling of the pipe can be performed until pipe coating is restored and inspected.

All materials used to adjust, support, protect, maintain and accommodate the integrity of transmission facilities shall be supplied by the Contractor and be approved by the facility operator in consultation with the Resident Engineer.

C. Methods of Construction

Test pits shall be performed under specification JB 400A to identify exact locations of Con Edison transmission facilities prior to construction as directed by Con Edison in consultation with the Resident Engineer. The transmission facilities will be surveyed by the contractor in their existing position anywhere that they will require adjustment horizontally/vertically, as directed by Con Edison in consultation with the Resident Engineer, prior to movement into final position. These same transmission facilities will be surveyed by the contractor after they are adjusted to their final position.

The Contractor shall provide proper support of all transmission facilities during excavation activities and while the transmission facilities are exposed. Payment shall be covered under various appropriate joint bid items.

In non-carbon fiber wrap areas, under appropriate joint bid excavation specifications, Con Edison or a specialty Contractor hired by Con Edison will visually inspect, test and perform

necessary "specialty work" of any coating that appears to lack integrity on exposed oil-o-static and return lines in accordance with JB 302 and the latest version of G-8209 prior to adjustment/movement and/or support of transmission lines. If any damage to the oil-o-static and/or return lines' field coating is caused by the Contractor, all costs associated with additional inspection, testing and "specialty work" performed to repair and remediate the coating and any and all delays incurred shall be at the Contractor's expense. If the integrity of the field coating is compromised on the oil-o-static and/or return lines' due to adjustment/movement and/or support of transmission lines per Con Edison guidelines, all costs associated with additional inspection, testing and "specialty work" performed to repair and remediate the coating and any and all delays shall be covered and paid for under JB 302. The latest version of Con Edison Gas Operations Standard G-8209, System B will be the only method that will be allowed. The coating shall be verified and accepted by the Con Edison representative prior to backfilling.

In carbon fiber wrap areas, Contractor to refer to JB 123 specification for details of visual inspection/testing and any repairs and remediation of damaged coating as required.

Methods of construction shall include but not be limited to the following:

1. Support

    a. Prior to any transmission facility pipe support work, the Contractor shall submit to Con Edison Engineering the following for review and approval:

        Drawings drawn to scale showing plans, sections and details of temporary support design stamped by a NYS Professional Engineer.

        Supporting calculations by the NYS Professional Engineer.

        The design span for temporary transmission facility supports shall satisfy the allowable stress and deflection limits in accordance with ASME B31.1 considering both static loads and internal operating pressure. Additional loads due to jacking to move the transmission facilities shall be accounted for in the support design and in accordance with reference drawing 516411.

        Typical transmission facility parameters are listed in Exhibit A of the latest version of CE-SI-1080 for calculating design loads for temporary pipe supports.

        If the transmission facility being placed in final position has not been carbon fiber wrapped under this contract, the maximum spacing between supports shall not exceed 10 feet.

2. Vibration monitoring program

    a. Based on the Contractor's means and methods for support and protection of transmission facilities, refer to Section 3.3 in the latest version of CE-SI-1080 for details of the vibration monitoring program.

b. Construction activities will be halted if, due to vibrations, electric transmission facilities coating is damaged and needs to be repaired. Any and all delays incurred shall be at the expense of the Contractor.

3. Adjust or move transmission facilities and/or support

a. Prior to any transmission facility pipe adjustment work, the Contractor shall request for permission to move any Con Edison electric transmission facility from the Con Edison on-site construction representative. The Con Edison on-site construction representative will request permission from the Con Edison Energy Control Center. Prior to the Contractor moving pipes in any direction, approval through the Con Edison on-site construction representative is required.

b. To perform electric transmission facility pipe adjustments that may be required for repair, remediation, abatement activities and/or moving into final position; the Contractor shall have and use acceptable equipment to lift/move pipes as necessary. Acceptable equipment for lifting feeder/oil return pipes include: air bag systems with appropriate regulators/controllers or come-alongs/chain hoists with nylon slings around pipes only. Excavation equipment (such as a backhoe) or other hydraulic hoists or jacks are not to be used.

c. Transmission facilities shall be relocated horizontally and/or vertically as required to perform carbon fiber wrapping of pipes, as directed by the facility operator in consultation with the Resident Engineer, and the cost shall be covered under JB 123. Adjustment of transmission facilities to final position shall be covered under this item.

d. Pending a condition assessment of the transmission facility by Con Edison, the contractor may be allowed to adjust the location and/or elevation of existing transmission facilities by transitioning the pipes with the minimum required wingback distances for the required offsets as outlined below. Nominal pipe size excludes repair barrels/clamps of varying diameters, lengths and locations:

Nominal Pipe Size [in]	Minimum Required Wingback [ft]		
	3" to 6" offset	6" to 9" offset	9" to 12" offset
6"	98	120	138
7"	97	119	137
8"	111	136	157
10"	129	158	183
12"	147	180	208

Contractor to refer to Section 4.0, Exhibit A, in the latest version of CE-SI-1080 for typical transmission steel pipe/conduit parameters and drawing 516411.

e. A work plan detailing the steps and means of moving the pipe shall be submitted to Con Edison Engineering for approval. The plan shall identify the incremental sequence and distances to move the pipe in achieving the offset, a description of

jacks (or other equipment) to move the pipe, their locations and load capacity, and the protective measures that will be employed to not damage the pipe coating.

f. If adjustment of transmission facilities greater than 12" is required, a work plan detailing the steps and means of moving the pipe incrementally shall be submitted to Con Edison Engineering for approval. As stated above, the plan shall identify the incremental sequence and distances to move the pipe in achieving the overall offset, a description of jacks (or other equipment) to move the pipe, their locations and load capacity, and the protective measures that will be employed to not damage the pipe coating.

D. Method of Measurement

The quantity to be measured for moving to final position, protecting and supporting transmission facilities shall be paid for by the linear foot (L.F.) of each line. A linear foot shall be defined as one (1) single pipe/line measured along its longitudinal axis that has been moved to its final position horizontally/vertically. Minimum required taper wingback lengths provided in the table above shall be paid for per longitudinal linear foot of pipe/line across varying appropriate pay items ranging from 0" up to and including 6", greater than 6" up to and including 9" and greater than 9" up to and including 12" adjustment in any direction.

Each type of utility adjustment shall be paid for separately; the types of utility adjustments are defined as follows:

JB 402B.1A	Existing transmission facility up to and including 6" nominal pipe size, adjusted 0" up to and including 6" in any direction, to final position
JB 402B.1B	Existing transmission facility greater than 6" nominal pipe size up to and including 12" nominal pipe size, adjusted 0" up to and including 6" in any direction, to final position
JB 402B.2A	Existing transmission facility up to and including 6" nominal pipe size, adjusted greater than 6" up to and including 9" in any direction, to final position
JB 402B.2B	Existing transmission facility greater than 6" nominal pipe size up to and including 12" nominal pipe size, adjusted greater than 6" up to and including 9" in any direction, to final position
JB 402B.3A	Existing transmission facility up to and including 6" nominal pipe size, adjusted greater than 9" up to and including 12" in any direction, to final position
JB 402B.3B	Existing transmission facility greater than 6" nominal pipe size up to and including 12" nominal pipe size, adjusted greater than 9" up to and including 12" in any direction, to final position

E. Price to Cover

The unit price bid per linear foot (L.F.) of transmission facility shall cover the cost of all labor, material, equipment, insurance, and incidentals necessary to shift, adjust, support, protect, maintain and accommodate the integrity of transmission facilities (measured by nominal pipe size, excluding repair barrels/clamps of varying diameters, lengths and locations) without damage to coating or disruption of service to the customers and in accordance with contract documents. The unit price bid shall also include the cost to: furnish and install supports, slings and beams for utility support; changes of sheeting method and/or configuration when required and where necessary to accommodate the utilities during all phases of contract work; any impact associated with maintenance and protection of traffic; and removal of sheeting around the utilities, and all else necessary and required to adjust the electric transmission facilities to final position.

The price to cover all survey work to determine the range of movement of transmission facilities to final position is covered in the cost of various bid items.

Thermal Sand/Sand backfill in accordance with the latest versions of EO-14620-13 and CE-SI-1080 shall be used around utility facilities and will be paid for under item JB 303 and the appropriate City items. Clean backfill shall be used if necessary starting approximately 15" above the top of the transmission facility and paid for under the appropriate City bid items.

In non-carbon fiber wrap areas, if the field coating is damaged by the Contractor a Con Edison approved specialty contractor will perform an additional visual inspection/testing of exposed oil-o-static and return lines and repair and remediate the coating as required. All costs to perform this work and any additional excavation that may be required, modification of work methods and/or construction sequencing, any impact with maintenance and protection of traffic, and loss of productivity shall be covered by the Contractor. If the integrity of the field coating is compromised, due to adjustment/movement and/or support of transmission facilities performed per Con Edison guidelines, payment for additional visual inspection/testing, repair and remediation and field coating shall be covered and paid for under JB 302 in accordance with the latest version of G-8209.

In carbon fiber wrap areas, Contractor to refer to JB 123 specification for price to cover inspection/testing and any repair and remediation of damaged coating as required to install the carbon fiber wrap. If the integrity of the field coating is compromised, due to adjustment/movement and/or support of transmission facilities to final position, performed per Con Edison guidelines, payment for additional inspection/testing, excavation, repair, remediation and field coating shall be covered and paid for under JB 123.

F. References

1. NYS Industrial Code Rule 753
2. Item JB 123
3. Item JB 302
4. Item JB 303
5. Item JB 400A
6. Item JB 401
7. Item JB 405A
8. CE-SI-1080

9. Dwg. 516411
10. EO-14620-13
11. Con Edison Gas Operations Standard G-8209 – Field Coating of Steel Pipe and Fittings Installed Underground and in Subsurface Structures

□

JB 402T - HORIZONTAL AND VERTICAL ADJUSTMENT OF TELECOMMUNICATIONS FACILITIES

A. Description

Under this section, the Contractor shall provide all labor, materials, equipment, insurance and incidentals required to adjust and support and protect and maintain and accommodate the integrity of telecommunication facilities including but not limited to:

1. Conduit(s);
2. Cables and Air Pipe
3. Concrete Encased/Capped Conduit Banks

The work shall be performed in accordance with specifications and at the direction of the facility operator in consultation with the Resident Engineer.

B. Materials

All materials used to adjust and support and protect and maintain and accommodate the integrity of utility facilities shall be similar to those indicated on the standard Sketches JB 100 A & 100 A-1 and shall be supplied by the Contractor and be approved by the facility operator in consultation with the Resident Engineer.

Materials used for replacing conduit(s) removed under this item shall be supplied by and installed by the Contractor and shall include but not be limited to the following:

1. Bends
2. Split and Solid Conduit(s) PVC and Steel
3. Couplings and Adapters PVC, Tile and Steel
4. Straps or plastic ties

PVC conduit and fittings shall be as supplied by American Pipe and Plastics, Type “C” or approved equal.
Steel Pipe and fittings shall conform to ASTM A53 Schedule 40
Tile to PVC adaptors shall be as supplied American U-Tel or approved equal.

C. Methods of Construction

Lengths of “wing-back” shall be determined by the facility operator in consultation with the Resident Engineer. All work performed prior to that approval shall be at the contractors risk.

Methods of construction shall include but not be limited to the following:

1 Removal and Support

a. Break with hand held power tools, remove and dispose of plain or reinforced concrete encasement.

b. Break with hand held power tools, remove and dispose of conduit(s) enclosures and conduit that contain conductor(s) and/or cable(s) except steel/Iron conduits, inner ducts and 1 ¼” to 1 ½” PVC “quad ducts. Breaking – “ringing and ripping” - of steel/iron conduits belonging to ECS shall be performed by ECS forces only. Contractor shall make safe the work area to accommodate the ECS forces.

c. Support and protect exposed conduits, cables, innerduct and airpipe as shown in Sketch JB 100A-1 and approved by the facility operator in consultation with the Resident Engineer.

□

d. ECS tenants cables may require inspection, testing and encapsulation before they can be shifted. Contractor shall make safe the work area to accommodate these forces. Contractor shall be notified by the facility operator of the ECS tenant requirements before the conduits are broken-out.

2 Adjust or Move Conductor(s) and/or cable(s) and support

a. Cable shall be relocated horizontally and/or vertically as directed by the facility operator in consultation with the Resident Engineer
b. Support and protect conductors and/or cables as shown on Sketch # JB 100 A-1 and/or as directed by the facility operator.

3. Replacement, Encasement, Protection and Support

a. Replace vacant and loaded conduit(s) with solid and/or split conduit(s) and adapters.

1) Vacant Conduit - Repairs to conduits shall not be permitted. All damaged or impaired lengths of conduit(s) shall be removed and replaced with new conduit(s). The number of vacant conduits replaced shall be confirmed by the facility operator.

2) Loaded Conduit - Replacement of conduits that are removed from around existing cable(s) or innerduct shall be accomplished with split plastic (PVC) or split steel conduits as directed by the facility operator. Where split and solid plastic or steel conduit is used, the conduit(s) shall be spaced 1½ inches from each other. All split PVC shall be secured with plastic straps spaced at a maximum distance of eighteen (18”) inches. Plastic conduit shall be joined with plastic couplings.

3) Adapting - Joining plastic conduit to existing conduits of other diameters or material shall be done using single or multiple adapters, (supplied by contractor).

b. If due to subsurface conditions, the cover is less than 20" from finished grade, the duct shall be protected with steel plates furnished by the contractor and measured for payment under Item JB 403T.

c. Support and protect cable(s) and/or conductor(s) and conduit(s).

d. Verify vacant conduits and provide pull ropes

e. Encase all exposed conduit with concrete (f’c = 1200 to 1500 psi maximum) with slump commensurate to completely fill voids around conduits. Concrete encasement shall extend to two (2”) inches beyond the limits of the duct bank vertically and horizontally.

D. <u>Method of Measurement</u>

The quantity to be measured for breaking out conduits, removing concrete, moving, protecting and supporting conductors and replacing conduits with split and solid conduit, shall be paid for by the linear foot (L.F.) of each conduit replaced. A linear foot of conduit shall be defined as one (1) single conduit measured along its longitudinal axis that has been broken out or moved from its original location either horizontally and/or vertically and measured in its final location. Quad PVC ducts produced as one unit shall be consider one duct for each quad unit. All conduits removed and not restored shall be covered for payment under the appropriate bid items for Removal of Abandoned Masonry for Utility Facilities and/or Removal of Abandoned Utility Conduits.
Multiple tile duct bank with concrete protection cover is not considered concrete encasement.

Each type of utility adjustment shall be paid for separately, the types of utility adjustments are defined as follows:

□

JB-402T.1 Existing Concrete Encased Non-Steel/Iron Conduits Placed in Final Position without Concrete Encasement. (L.F.)

JB-402T.1A Existing Concrete Encased Non-Steel/Iron Conduits Placed in Final Position with Concrete Encasement. (L.F.)

JB-402T.2 Existing Non-Concrete Encased Non-Steel/Iron Conduits Placed in Final Position without Concrete Encasement. (L.F.)

JB-402T.2A Existing Non-Concrete Encased Non-Steel/Iron Conduits Placed in Final Position with Concrete Encasement. (L.F.)

JB-402T.R1A Existing Concrete Encased Steel/Iron Conduits Placed in Final Position with Concrete Encasement. (L.F.)

JB-402T.R2A Existing Non-Concrete Encased Steel/Iron Conduits Placed in Final Position with Concrete Encasement. (L.F.)

JB-402T.V1 Existing Vacant Concrete Encased Conduits Placed in Final Position without Concrete Encasement. (L.F.)

JB-402T.V1A Existing Vacant Concrete Encased Conduits Placed in Final Position with Concrete Encasement. (L.F.)

JB-402T.V2 Existing Vacant Non-Concrete Encased Conduits Placed in Final Position without Concrete Encasement. (L.F.)

JB-402T.V2A Existing Vacant Non-Concrete Encased Conduits Placed in Final Position with Concrete Encasement. (L.F.)

JB-402T.J1 Existing Concrete Encased Conduits Placed in Final Position without Concrete Encasement. (L.F.) in Which Only Conduit Joints are Broken Out and Conduits Remain Intact.

JB-402T.J1A Existing Concrete Encased Conduits Placed in Final Position with Concrete Encasement. (L.F.) in Which Only Conduit Joints are Broken Out and Conduits Remain Intact.

JB-402T.J2 Existing Non-Concrete Encased Conduits Placed in Final Position without Concrete Encasement. (L.F.) in Which Only Conduit Joints are Broken Out and Conduits Remain Intact.

JB-402T.J2A Existing Non-Concrete Encased Conduits Placed in Final Position with Concrete Encasement. (L.F.) in Which Only Conduit Joints are Broken Out and Conduits Remain Intact.

E. Price to Cover

The unit price bid per linear foot (L.F.) of conduit shall cover the cost of all labor, material, equipment, insurance, and incidentals necessary to shift, adjust, support, protect, maintain and accommodate the integrity of utilities without disruption of service to the facility operator's customers and in accordance with contract documents. The price bid shall also include the cost of: breaking out, removal and disposal of plain or reinforced concrete encasements, conduits (except iron/steel), support of cables/conduits, replacement with field split, split and solid conduits, adapters, clamps, straps and couplings; verify vacant conduits and provide pull ropes; furnish and install concrete encasement, supports, slings and beams for utility support; changes of sheeting method and/or configuration when required and where necessary to accommodate the utilities during all phases of contract work; and removal of sheeting around the utilities, and all else necessary and required to complete the work.

The unit price shall include providing access to the facility operator pipe-ripping crews and tenants to verify and test cables before, during and after the pipe ripping operation completed by the facility operator or specialized contractor hired by the facility operator and after conduit removal by the Contractor The unit price shall include, but not limited to, opening and closing of fences; removal and replacement of temporary timber curb and opening and closing of traffic plates. Access to adjacent manholes impacted by the run is included in this item. JB 450 shall not be used in conjunction with JB-402T as JB-402T covers access to the work site at all times for work required under this item.

F. References

1. Sketches JB 100A and 100A-1
2. JB 403T
3. American Pipe and Plastics, P.O. Box 577, Binghamton, N.Y. 13902
4. American U-Tel, 9760 Smith Rd., Willoughby, Ohio 44094

□

JB 403T – FURNISH AND INSTALL STEEL PROTECTION PLATES FOR TELECOMMUNICATIONS FACILITIES

A. Description

Under this section, the Contractor shall furnish and install as required permanent steel protection plates over telecommunications facilities where directed by the facility operator(s).

B. Materials

Material shall be:
¼" thick ASTM A-36 plates. Maximum size 24" by 48".
3/8" thick ASTM A-36 plates. Maximum size 12" by 18".
Thickness to be determined by the facility operator(s)

C. Method of Construction

Steel protection plates shall be placed in accordance with the attached facility operator(s) standard sketch JB 403T. All protective plates shall overlap a minimum of 3".

D. Method of Measurement

The quantity for payment shall be the area of permanent steel plating protection furnished and installed (excluding overlap) and measured in place in Square Feet (S.F.).
JB 403T.1 – Furnish and Install 1/4" thick steel plate (S.F.)
JB 403T.2 – Furnish and Install 3/8" thick steel plate (S.F.)

E. Price to Cover

The price shall cover the cost of all labor, material, equipment, insurance, and incidentals necessary to complete the work.

F. References

Sketch JB 403T

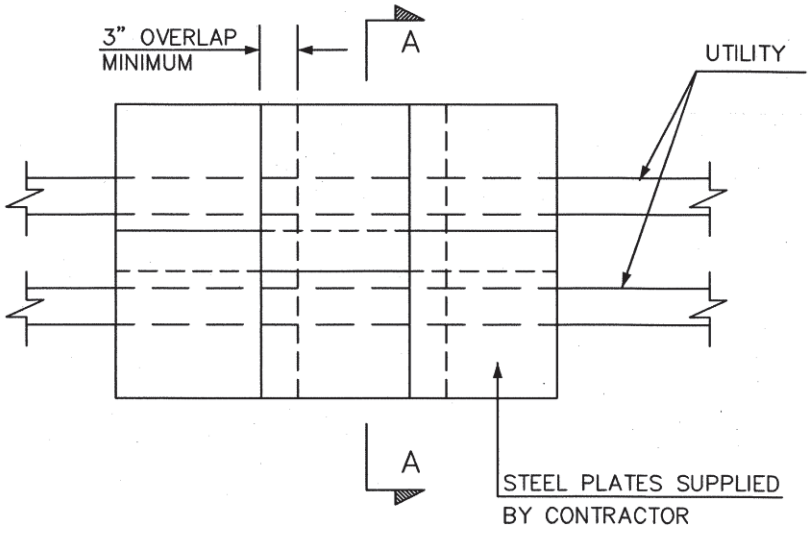

PLAN
NOT TO SCALE

AREA FOR PAYMENT
SHALL BE AS MEASURED
IN PLACE (EXCLUDE OVERLAP)

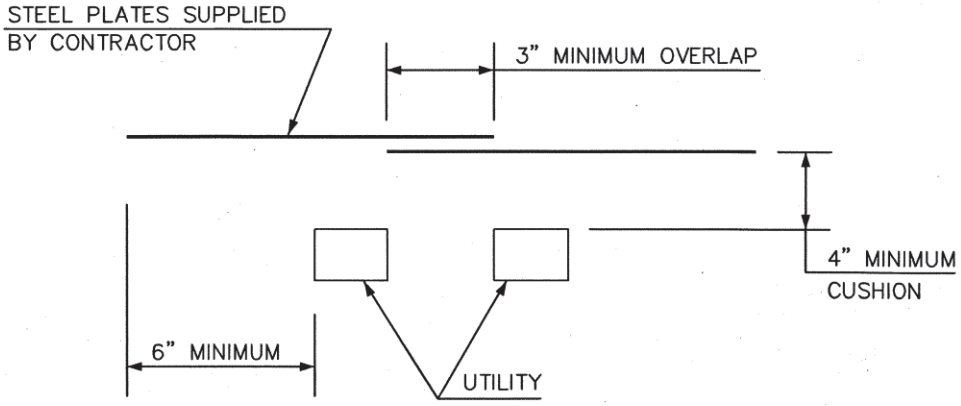

SECTION A–A
NOT TO SCALE

TYPICAL PLATE SIZES:
6" x 48" x 1/4"
12" x 48" x 1/4"
24" x 48" x 1/4"
12" x 24" x 3/8"

J.B. SKETCH	
PLACING STEEL PROTECTION PLATES FOR COMMUNICATION FACILITIES	
REVISIONS	
09/13/2017	CONTRACT NO.
	SKETCH NO. JB 403 T

JB 404 – Pier and/or Plate Method of Protection for Ductile Iron Water main with less than 24" Cover

A. Description:

Under this item, the Contractor shall provide all labor, materials, equipment, insurance and incidentals required to protect ductile iron water mains that are installed with a cover of 24 inches or less crossing over various utility facilities. The work shall be performed in accordance with the contract plans, specifications and at the direction of the facility operator(s), upon approval from the Resident Engineer.

B. Materials:

The Contractor shall supply all materials (concrete, beams, plates, etc.) necessary to provide the pier and plate method of protection as shown on BWS Standard Drawing No. 46464-Z.

C. Method of Construction:

The Contractor shall provide pier and plate protection in accordance with BWS Standard Drawing No. 46464-Z. The Contractor shall support, maintain and accommodate the water main and all other utility facilities during the installation of the pier and plate components. The Contractor shall be solely and totally responsible for the disturbances and/or any damages to such facilities.

D. Method of Measurement:

The quantity to be measured for payment shall be the additional amount of square foot (S.F.) of steel plate required to protect ductile iron water mains crossing over utility facilities with a cover of 24 inches or less, or for other shallow facilities where the pier and plate method may be required, as directed by the Facility Operator upon approval from the Resident Engineer.

E. Price to Cover:

The price shall cover the cost of all supervision, labor, material, equipment, and incidentals necessary to construct the specified method of protection. The work shall also cover the cost to cut, break, and remove additional pavement, additional excavation, sheeting, maintenance of traffic, traffic plates, and to furnish and install additional backfill and pavement restoration. This item does not cover the costs for special care excavation around utilities that are covered under separate items.

F. References:

1. BWS Standard Drawing No. 46464-Z.

JB 404A – ALLOWANCE FOR PERMANENT SUPPORT OF CRITICAL UTILITY FACILITIES IN AREAS OF SIGNIFICANT SETTLEMENT

A. Description

Under this section, the Contractor shall provide all labor, materials, equipment, insurance and incidentals necessary and required to permanently support, maintain, protect and accommodate the integrity of utility facilities, including but not limited to:

1. Oil-o-Static facilities;
2. Return lines;
3. Communication lines;
4. Fuel oil lines;
5. Freeze lines;

of various sizes and configurations as shown on the contract documents and field verified by the Contractor at the start of construction. To fully understand the design implications of the potential interference and to proceed with the design work, the Contractor, after receiving the NOTICE TO PROCEED, shall excavate test pits identified by Con Edison and performed under specifications JB 400 and JB 400A to identify exact locations of Con Edison facilities within areas of anticipated significant settlement that require permanent support prior to construction. The Contractor will submit their findings to Con Edison and the Resident Engineer. Con Edison shall determine if and where the design of a permanent support system is required due to significant settlement under capital project SANDRESM1.

B. Materials

All materials used (concrete, steel reinforcement, beams, etc.) shall be determined by Con Edison's design and shall be supplied by the Contractor and approved by the facility operator. Contractor to refer to sketches JB 404A-A and JB 404A-B for conceptual design.

Type, size and spacing of piles and pile caps, and longitudinal and perpendicular grade beams shall be designed and provided by Con Edison to the Contractor.

Corrosion resistant protection shall be installed to protect the permanent support system for a life cycle analysis of 150 years.

C. Methods of Construction

The Contractor shall permanently support and protect all ten (10) pipes in the trench: five (5) electric transmission lines, three (3) return lines, and two (2) communication lines as shown on the Standard sketches. If any additional Con Edison facilities are unearthed during construction the Contractor shall notify Con Edison immediately to determine whether the facility is critical and how to proceed with permanent support and protection. Sketches JB 404A-A and JB 404A-B are to be used as a reference for the Contractor for scheduling purposes. Actual permanent support designs will be provided by Con Edison after test pit results are reviewed and analyzed by Con Edison. At which point alternate methods and/or one or a combination of methods shown on the JB sketches shall be permitted if proposed by the Contractor and approved by Con Edison. It is the intent of this item to build a permanent support, maintain, protect and accommodate the integrity of all utility facilities, and all combinations and configurations of utility facilities, encountered in the significant settlement areas.

The Contractor shall temporarily support, maintain and accommodate the utility facilities during the installation of the permanent support system components. The Contractor shall be required to perform all additional labor, provide all material, and accommodate all work methods in order to complete permanent support installation and avoid settlement of any kind on Con Edison facilities. Such work shall be performed as directed by the facility operator in consultation with the Resident Engineer and in accordance with contract specifications and the latest edition of CE-SI-1080, Guidelines for Protecting Existing Underground Transmission Electric Facilities from Nearby Construction Activities. The Contractor shall be solely and totally responsible for disturbances and/or any damages to such facilities.

The facility operator shall identify the locations of all utilities within the contract area as required by New York State Industrial Code Rule 753. As provided by the Rule, the Contractor shall use hand excavation methods (pick and shovel or hand held tools; saw cutting is not permitted in any way) to remove the pavement section. Upon exposing the utility facilities sufficiently at the sole discretion of the facility operator in consultation with the Resident Engineer to determine relationships and/or dimensions, the contractor shall be permitted to proceed with hand excavation only, within a zone of protection whose limit shall be defined as a perimeter located 24-inches from the outside face of each utility facility. The contractor shall properly dispose of all material. Size and location of excavation shall be as directed by the facility operator in consultation with the Resident Engineer. Trenches shall be excavated to a depth and size necessary to facilitate the installation of the permanent support system and in conformance with the applicable specification. All existing utility facilities that are encountered during trench excavating shall be supported, protected, maintained, accommodated and adjusted as needed in a manner suitable to the facility operator in consultation with the Resident Engineer. The sheeting required shall be furnished and installed in full compliance with the State of New York and Federal Safety Code requirements and in compliance with applicable specifications and submitted, signed and sealed by a Professional Engineer licensed in the State of New York with supporting material, to Con Edison and the Department of Design and Construction (DDC) for review and approval.

Care shall be taken that no existing utility facilities or other structures are broken or damaged. Care shall be taken to avoid damage to existing utility facilities and structures, and to pavements and their foundations, and to avoid caving or sliding banks within the excavation. Any damage to existing utility facilities will be repaired by the Contractor, at the Contractor's expense, and to the satisfaction of the Owner of the facility.

Under other appropriate joint bid specifications, Con Edison or a specialty Contractor hired by Con Edison (or the Contractor's Con Edison approved Specialty Contractor in areas of carbon fiber wrap) will visually inspect, test and perform necessary "specialty work" or repairs and remediation of any coating that appears to lack integrity on exposed oil-o-static and return lines in accordance with JB 302 and the latest version of G-8209 prior to construction and installation of this permanent support system. If any damage to the oil-o-static and/or return lines' field coating is caused by the Contractor due to construction of this permanent support system, all costs associated with additional testing and work performed to repair and remediate the coating and any and all delays incurred shall be at the Contractor's expense. The latest version of Con Edison Gas Operations Standard G-8209, System B will be the only method that will be allowed. The coating shall be verified and accepted by the Con Edison representative prior to backfilling.

Based on the final permanent support system design, the facility operator in consultation with the Resident Engineer shall determine if vibration monitoring is required and how many monitoring locations are needed. Bracing of piles and means and methods for backfill to be approved by Con Edison in accordance with Contract requirements and all backfill material shall conform to contract specifications for such purpose. In instances where the pile supports are in such close proximity to flood walls, retaining walls or other structural foundations to undermine their integrity, permanent supports may be integrated with SANDRESM1 foundation structures. Contractor to submit signed and sealed designs by a Professional Engineer licensed in the State of New York with supporting material, to Con Edison and DDC for review and approval.

D. Method of Measurement

The total estimated cost of this item is the "fixed sum" amount shown for this item in the Bid Schedule. No guarantee is given that the "fixed sum" amount shall be fully or partially used.

The "fixed sum" amount is included in the bid solely to ensure that sufficient monies will be available to pay the Contractor for the additional cost necessary to accommodate the possible need for a permanent support system to eliminate any settlement on Con Edison's facilities. Con Edison to determine if and where this permanent support system is required.

E. Price to Cover

The price shall cover the cost of all labor, material, equipment, insurance and incidentals necessary and required to construct a complete permanent support system and maintain, protect and accommodate the integrity of the utilities without disruption of service to the customers in accordance with contract documents, the specifications and as directed by the facility operator in consultation with the Resident Engineer. The price shall include the cost of: concrete and/or steel beams, epoxy coated steel reinforcement, corrosion resistant protection with a life cycle analysis of 150 years, perpendicular and longitudinal grade beam connections, beam connections to pile caps, supports, and slings; changes of any work methods including sheeting and configuration where necessary to accommodate the utility; installation of Maloney Model 60 Casing Insulators to each pipe (supplied by Con Edison); a combination of hand and hand and machine excavation within the zone of protections including widening the trench to accommodate the permanent support system as shown on JB Sketches JB 404A-A and JB 404A-B, temporary pavement as required, backfilling and compacting around, over, under and between the zones of protection of the utilities as required; and removal of sheeting around the utilities, and the cost of any impact with maintenance and protection of site and traffic.

Price to cover pile labor, material, equipment, insurance, furnishing, installing and incidentals necessary under item 70.13MN. Sand backfill shall be used around utility facilities and will be paid for under item JB 303.

Any and all excavation required to install the permanent support system, and work method accommodations or change in construction operations including, but not limited to, sheeting alterations shall be included in the cost of all joint bid items. Temporary support and protection of any and all Con Edison facilities encountered during installation of this permanent support system are included in all the joint bid items. Temporary support of this system itself during construction and prior to placement of backfill is included in all the joint bid items. All costs for vibration monitoring are included in all the joint bid items.

The costs incurred for the Contractor to coordinate with Con Edison forces or their Specialty Contractor to perform additional visual inspection of exposed oil-o-static and return lines and additional excavation that may be required if the field coating is damaged by the Contractor during construction of this permanent support system; repairs to field coating and remediation as required by the Specialty Contractor; modification of work methods and/or construction sequencing, any impact with maintenance and protection of traffic, and loss of productivity shall be covered at the Contractor's expense. The cost of any specialty work required due to coating that appears to lack integrity on exposed oil-o-static and return lines shall be covered under other appropriate joint bid items.

When Con Edison provides the design to the Contractor, pricing will be based on time and material or an agreed upon unit price by the Contractor, the Department of Design and Construction and Con Edison.

F. References

1. NYS Industrial Code Rule 753
2. Item JB 302
3. Item JB 303
4. Item JB 400
5. Item JB 400A
6. CE-SI-1080
7. Sketches JB 404A-A and JB 404A-B
8. City item 70.13MN
9. Con Edison Gas Operations Standard G-8209 – Field Coating of Steel Pipe and Fittings Installed Underground and in Subsurface Structures

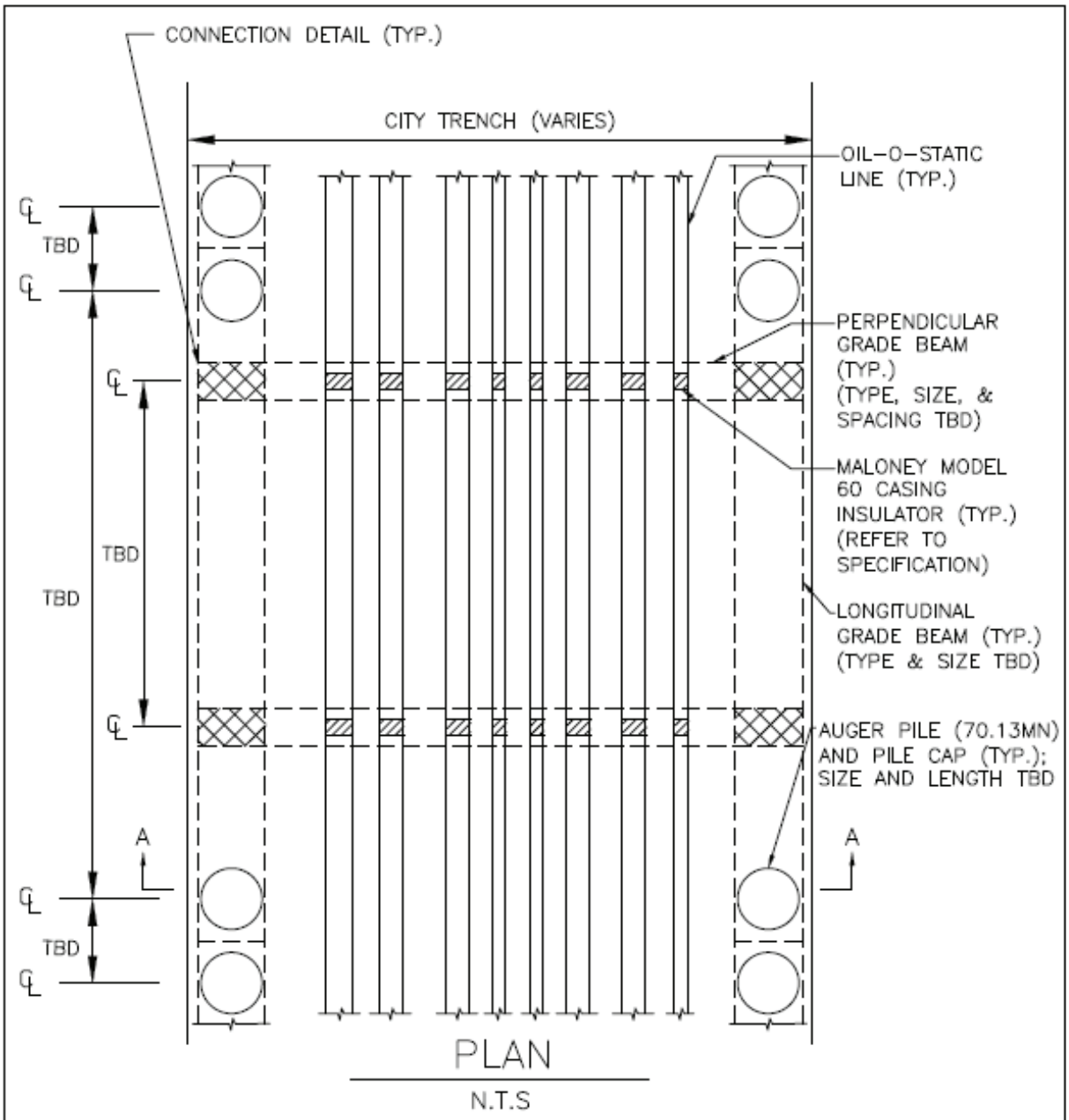

NOTES:

1. FINAL MATERIAL OF SUPPORT SYSTEM TO BE DETERMINED DURING CONSTRUCTION.
2. PILES TO BE BRACED AND MEANS AND METHODS FOR BACKFILL TO BE APPROVED BY CON EDISON.
3. PILE SUPPORTS MAY BE INTEGRATED WITH SANDRESM1 FLOOD WALL AND/OR RETAINING WALL FOUNDATION STRUCTURES.
4. CORROSION RESISTANT PROTECTION TO SUPPORT SYSTEM FOR A LIFE CYCLE ANALYSIS OF 150 YEARS TO BE INSTALLED.

JB SKETCH	
PERMANENT SUPPORT REQUIREMENTS FOR AREAS OF SIGNIFICANT SETTLEMENT (SECTION A - A SKETCH NO. 404A-B)	
CONTRACT NO. SANDRESM1	SKETCH NO. JB 404A-A

□

TYPICAL DETAIL PER OIL–O–STATIC PIPE

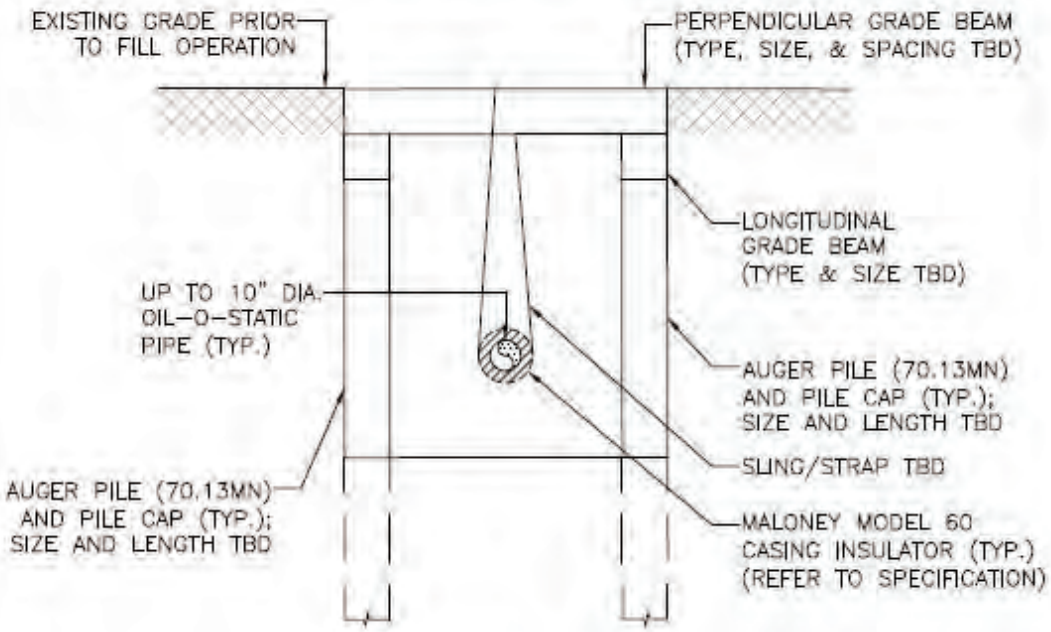

SECTION A–A

N.T.S

NOTES:

1. FINAL MATERIAL OF SUPPORT SYSTEM TO BE DETERMINED DURING CONSTRUCTION.
2. PILES TO BE BRACED AND MEANS AND METHODS FOR BACKFILL TO BE APPROVED BY CON EDISON.
3. PILE SUPPORTS MAY BE INTEGRATED WITH SANDRESM1 FLOOD WALL AND/OR RETAINING WALL FOUNDATION STRUCTURES.
4. CORROSION RESISTANT PROTECTION TO SUPPORT SYSTEM FOR A LIFE CYCLE ANALYSIS OF 150 YEARS TO BE INSTALLED.

JB SKETCH	
PERMANENT SUPPORT REQUIREMENTS FOR AREAS OF SIGNIFICANT SETTLEMENT (PLAN SKETCH NO. 404A-A)	
CONTRACT NO. SANDRESM1	SKETCH NO. JB 404A-B

□

□

JB 405 - EXCAVATION FOR INSTALLATION OF UTILITY FACILITIES

A. Description

Under this section, the Contractor shall provide all labor, materials, equipment, insurance and incidentals necessary to excavate, maintain trenches and backfill for the installation of new utility facilities including but not limited to:

1. Conduits
2. Non-cost sharing gas facilities
3. Steam mains
4. Steel pipe(s)

The trench to be excavated shall be determined by the size of the utility facility to be installed. The work shall be performed in accordance with applicable specifications, at the direction of the facility operator.

B. Materials

All materials used to excavate and prepare trenches shall be supplied by the Contractor and be approved by the facility operator.

C. Methods of Construction

1. Excavation – The Contractor shall saw cut and/or break and remove existing roadway which may include but is not limited to, asphalt, concrete and cobblestone, utilizing approved equipment that leaves a neat straight joint line along the juncture with subsequently replaced pavement. The Contractor shall be permitted to excavate utilizing a combination of machine and hand excavation, as field conditions warrant and as directed by the facility operator. The trench shall be adjusted so as to provide a nominal cover as defined in the specifications for the facility being installed over the new utility facilities or as required based on field conditions, applicable specifications, or as directed by the facility operator. The width of the trench shall be as directed by the facility operator or as shown on Sketch JB 603T (ECS only). The bottom of the trench shall be graded smooth with a minimum cushion of 3 inches of backfill material or in conformance with applicable specification and be compacted, to minimize initial settlement and to avoid "point" support of new utility facilities. All stones projecting into the trench bottom shall be removed, and the voids backfilled before the new utility facilities are installed. Where streets are not to final grade, the cover shall be measured from the final grade, or the existing grade, whichever provides the deeper trench. Excavation in the vicinity of utilities and other structures shall be performed using hand tools. The contractor shall properly dispose of all materials excavated away from site. Size and location of excavation shall be as directed by the facility operator. Trenches shall be excavated to a depth and size necessary to facilitate the installation of the new utility facility and in conformance with the applicable specification. All existing facilities that are encountered during trench excavating shall be protected in a manner suitable to the facility operator. Tight sheeting shall be used, as required, based on field conditions and/or when the depth of excavation is equal to or greater than five feet. Skeleton type sheeting will not be permitted. The sheeting required shall be furnished and installed in full compliance with the State of New York and Federal Safety Code requirements and in compliance with applicable specifications and/or as directed by the facility operator.
Care shall be taken that no existing utility facilities or other structures are broken or damaged. Contractor shall excavate all material encountered necessary to facilitate the installation of the new utility facilities, and as directed by the facility operator. Care should be taken to avoid damage to existing utility facilities and structures, and to pavements and their foundations, and to avoid caving or sliding banks within the excavation.

□

2. Maintenance of Trench Excavation - Excavated trenches shall be maintained free of debris and kept dry by the contractor. In order to accomplish this, contractor shall, upon completion of excavation and placement of sheeting (as required and/or if depth is equal to or greater than five feet), furnish and install adequate steel plates, as directed by the facility operator, and posting over the excavated trenches and shall temporarily remove all equipment debris and workers, and relocate barricades in order to open the full width of street to traffic during nonworking hours, as required based on DOT requirements. The Contractor shall then, at no additional cost, relocate such barricades barrels, cones and other warning devices and remove steel plates, as and when directed by the facility operator to facilitate the installation of the new utility facility. When work is being performed and the excavations are not covered with steel plates, the Contractor shall provide complete and safe access to the trench as may be required, and shall provide construction barricades and maintain traffic at all times as shown or as directed by the facility operator. Upon completion of installation of the new utility facility, the trench excavation shall be backfilled by the contractor in accordance with Contract requirements and all backfill material shall conform to contract specifications for such purpose.

3. Pavement and Sidewalk Restoration - After backfilling is completed, the contractor shall install temporary pavement consisting of six inches (6”) thick asphaltic concrete mixture in roadway areas or a two inches (2”) thick asphaltic concrete mixture in sidewalk areas in order to maintain existing pedestrian and vehicular traffic. This temporary pavement shall be maintained until permanent replacement as specified in contract.

D. Method of Measurement

The quantity to be measured for payment shall be the number of cubic yards (C.Y.) of trench actually excavated and backfilled as directed by the facility operator or as shown on Sketch JB 603T for JB 603T Items. The volume occupied by existing pipes or other structures will not be deducted from the total volume measured.

JB 405.1 - Trench Excavations for installation of Utility Facilities with total depths less than five feet (C.Y.)

JB 405.2 - Trench Excavations for Utility Facilities with total depths equal to or greater than five feet (C.Y.)

E. Price to Cover

The unit price bid for the various trench excavation items shall include the cost of all labor, materials, equipment, insurance, and incidentals necessary to completely expose, protect and maintain the integrity of the facilities without disruption of service to the customers and in accordance with the contract documents. The price shall also include, installation of traffic plates as well as opening and closing of plates as may be required in order to provide access to trench; installation, removal and maintenance of tight sheeting as required; cutting, breaking and removing various thickness of surface and base pavement; excavation by hand to expose Page 3 of 3 10/05/2017 existing structures; furnishing, placing and compacting clean backfill following installation of utility facility in compliance with DOT requirements. Any required removing, trucking, storing, and disposing of material shall be deemed included in the unit price. The price shall also include the cost of providing temporary pavement restoration. Permanent pavement restoration shall be paid under city items. The price shall also include the cost of locating and protecting all utilities encountered as required.

Clean backfill material in accordance with specifications shall be used around gas facilities and critical facilities shall be paid for under item JB 303.

□

F. References

1. Item JB 303
2. Sketch JB603T
3. Con Edison Specifications, latest revisions

CEHSP S13.00 – Excavation and Trenching

□

JB 405A – TRENCH EXCAVATION FOR CARBON FIBER WRAPPING EXISTING UTILITY FACILITIES

A. Description

Under this section, the Contractor shall provide all labor, materials, equipment, insurance and incidentals necessary and required for trench excavation while maintaining, protecting and accommodating the integrity of the facility operator's oil-o-static pipes, return lines, fuel lines, freeze lines, steam mains, gas transmission mains, high pressure gas mains and fiber optic lines (i.e., the utility facilities).

The trench to be excavated shall be determined by the space required to perform all carbon fiber wrap activities. The work shall be performed in accordance with contract plans, applicable specifications, and/or at the direction of the facility operator in consultation with the Resident Engineer. Contractor to refer to latest version of CE-SI-1080 for Guidelines for Protecting Existing Underground Transmission Electric Facilities from Nearby Construction Activities for additional information and requirements.

B. Materials

All materials used to excavate and prepare trenches, and provide support of utilities including any and all sheeting and shoring methods shall be supplied by the Contractor and be approved by the facility operator in consultation with the Resident Engineer. Backfill material to be used around the utility facilities will be paid for under Item JB 303 and appropriate City bid items.

C. Methods of Construction

1. Excavation – The contractor shall maintain, protect and accommodate the integrity of the utility facilities; including minor adjustments in any direction to these facilities. The facility operator shall identify the locations of the utility facilities within the contract area as required by New York State Industrial Code Rule 753. As provided by the Rule, the contractor shall use hand excavation methods (pick and shovel or hand held power tools; saw cutting is not permitted in any way) to remove the pavement section. Upon exposing the utility facilities sufficiently at the sole discretion of the facility operator in consultation with the Resident Engineer to determine relationships and/or dimensions, the contractor shall be permitted to proceed with hand excavation only, within a zone of protection whose limit shall be defined as a perimeter located 24-inches from the outside face of each utility facility. The bottom of the trench shall be a minimum of 18" below the facility, graded smooth with a minimum cushion of 6 inches of sand, backfilling in increments of 6" or in conformance with applicable specification, and be compacted to minimize initial settlement. All stones projecting into the trench bottom shall be removed, and the voids backfilled before the Contractor proceeds with the next phase of work. Where pavement is not to final grade, the cover shall be measured from the final grade, or the existing grade, whichever provides the deeper trench. The contractor shall properly dispose of all materials excavated away from site. Size and location of excavation shall be as directed by the facility operator in consultation with the Resident Engineer. Trenches shall be excavated to a depth and size necessary to facilitate the installation of carbon fiber wrapping and in conformance with the applicable specification. All existing facilities that are encountered during trench excavating shall be supported, protected and adjusted as needed in a manner suitable to the facility operator in consultation with the Resident Engineer. Tight sheeting shall be used, as required by the facility operator in consultation with the Resident Engineer, based on field conditions and/or when the depth of excavation is equal to or greater than five feet.

Skeleton type sheeting will not be permitted. The sheeting required shall be furnished and installed in full compliance with the State of New York and Federal Safety Code requirements and in compliance with applicable specifications and submitted, signed and sealed by a Professional Engineer licensed in the State of New York with supporting material, to Con Edison and the Department of Design and Construction (DDC) for review and approval.

Care shall be taken that no existing utility facilities or other structures are broken or damaged. Care should be taken to avoid damage to existing utility facilities and structures, and to pavements and their foundations, and to avoid caving or sliding banks within the excavation. Any damage to existing utility facilities will be repaired by the Contractor, at the Contractor's expense, and to the satisfaction of the Owner of the facility.

Refer to Section 3.4 in the latest version of CE-SI-1080 for transmission facility temporary support design criteria.

Some of the existing coatings on the utility facilities may consist of coal tar wrap and may contain asbestos and/or PCB's. Contractor to refer to JB 123 specification for details of visual inspection/testing and any repairs and remediation of coating required upon completion of hand excavation and unearthing (visual line of sight) of the utility facilities.

2. Maintenance of Trench Excavation - Based on the Contractor's method of sheeting and installation, the facility operator in consultation with the Resident Engineer shall determine if vibration monitoring is required and how many monitoring locations are needed. Refer to Section 3.3 in the latest version of CE-SI-1080 for details of the vibration monitoring program. All costs for vibration monitoring are included in all the joint bid items. Excavated trenches shall be maintained free of debris and kept dry by the contractor. In order to accomplish this, the contractor shall, upon completion of excavation and placement of sheeting (as required by the facility operator in consultation with the Resident Engineer, based on field conditions and/or if depth is equal to or greater than five feet), furnish and install plastic barrels and temporary chain link fence (refer to appropriate City bid items), as directed by the facility operator in consultation with the Resident Engineer, around the excavated trenches when they are not occupied by equipment and/or workers. The Contractor shall, at no additional cost, relocate such safety and warning devices, as and when directed by the facility operator in consultation with the Resident Engineer to facilitate the installation of the carbon fiber wrapping to the existing utility facility. When work is being performed and the excavations are open, the Contractor shall provide complete and safe access to the work area as may be required, and shall provide safety and warning devices and maintain pedestrian traffic at all times as directed by the facility operator in consultation with the Resident Engineer. Upon completion of installation of the carbon fiber wrapping to the existing utility facilities, the trench excavation shall be backfilled by the contractor in accordance with Contract requirements and all backfill material shall conform to contract specifications for such purpose. Refer to section 3.5 in the latest version of CE-SI-1080 for backfill of transmission facility requirements.

3. Pavement and Sidewalk Restoration - After backfilling is completed, the contractor shall install temporary pavement consisting of six inches (6") thick asphaltic concrete mixture in roadway areas or a two inches (2") thick asphaltic concrete mixture in sidewalk areas in order to maintain existing pedestrian and vehicular traffic. This temporary pavement shall be maintained until permanent replacement in completed.

The contractor shall maintain, protect, accommodate the integrity of and adjust as needed the utility facilities.

D. Method of Measurement

The quantity to be measured for payment shall be the number of cubic yards (C.Y.) of trench actually excavated as directed by the facility operator in consultation with the Resident Engineer. The volume occupied by existing utility facilities will not be deducted from the total volume measured.

The volume included for payment shall be calculated as the depth from the surface to the bottom of the sheeted trench excavation as determined by the facility operator in consultation with the Resident Engineer, multiplied by the outer edge of the open excavation determined by the facility operator in consultation with the Resident Engineer, multiplied by the linear foot of trench as noted in the contract drawings.

E. Price to Cover

The unit price bid per cubic yard of trench excavation and backfill of utility facilities shall cover the cost of all labor, material, equipment, insurance and incidentals necessary to completely expose, support, protect, maintain and accommodate the integrity of the facilities, and make adjustments to the transmission utilities, inclusive of oil-o-static pipes, freeze lines, return lines and communication lines as determined by the Facility Operator in consultation with the Resident Engineer, in accordance with the Contract Documents and field-verified conditions. JB 402B shall cover the cost of adjustment of oil-o-static pipes, freeze lines and return lines to final position. JB 402 shall cover the cost of adjustment of communication lines to final position.

The unit price shall include the cost of: difficulties encountered during the performance of exposing oil-o-statics; installation and removal of sheeting; loss of productivity due to slower rate of excavation during excavation, including the use of such methods as hand excavation around existing oil-o-static pipe(s); trucking and disposing of unsuitable fill; backfilling and compaction, in compliance with DOT, DPR and Con Edison requirements, around, over and under the facilities including the use of special methods; and warning and safety measures that may be required to temporarily close and/or complete the work.

The price shall also include installing, removing and maintaining tight sheeting that may be required and vibration monitoring. The price shall also include associated maintenance of traffic, traffic plates, openings and closings of plates as may be required in order to provide access to trench when in roadway and DPR permits required to provide access to trench when in landscaping areas; cut, break and remove various thickness of surface and base pavement by hand-held pneumatic tools; excavate by hand to expose existing utility facilities including the 24" zone of protection; furnish, place and compact, in compliance with DOT, DPR and Con Edison requirements, clean backfill and sand following installation of carbon fiber wrapping. Any required removing, trucking, storing, and disposing of excavated material shall be deemed included in the unit price. The price shall also include the cost of providing temporary pavement restoration, inclusive of 4" Type 3 binder mixture on 6" shoulder stone. The temporary pavement will be maintained until restoration of the area is complete. If the Contractor's or subcontractor's equipment undermines the integrity of the temporary pavement, vehicular steel plates will be installed at no additional cost. The price shall also include the cost of locating and protecting all utilities encountered as required.

Sand backfill shall be used around existing oil-o-static pipes, steam mains, gas transmission mains, high pressure gas mains and fiber optic lines and will be paid for under item JB 303 and the appropriate City items. Clean backfill shall be used if necessary starting approximately 15" above the top of the utility facility and paid for under the appropriate City bid items.

Contractor to refer to JB 123 specification for price to cover visual inspection/testing and any repair and remediation of coating required upon completion of hand excavation and unearthing (visual line of sight) of oil-o-static and return lines.

F. References

1. Item JB 123
2. Item JB 303
3. NYS Industrial Code Rule 753
4. CE-SI-1080

□

JB 450 – CONSTRUCTION FIELD SUPPORT

A. Description

Under this section, the Contractor shall provide all labor, materials, equipment, insurance and incidentals necessary to provide construction field support, while maintaining and protecting surface and subsurface facilities, at various locations approved solely by the facility operator. The Contractor shall encounter various surface and subsurface utility facilities while performing various construction field support operations, which may include but are not limited to working over, under, adjacent to, around, in between and in close proximity of:

1. Conduits
2. Conductors
3. Concrete encased conduit banks
4. Steel pipes
5. Gas mains
6. Steam mains
7. Oil-o-static facilities
8. Utility structures and covers

The actual construction field support operation to be performed by the Contractor shall be performed in accordance with the contract plans, specifications or as determined based on actual field conditions and at the sole discretion and direction of the facility operator. This item shall apply to various field support operation tasks for which there are no other applicable JB Items to cover the required work. This item will not apply and will not be paid when there are other applicable JB items available either partly or completely covering tasks described below as determined solely by the facility operator.

B. Materials

All materials used to provide construction field support shall be supplied by the Contractor and be approved by the facility operator in consultation with the Resident Engineer.

C. Methods of Construction

It is the intent of this item that the Contractor provides field support construction crews suffice to perform various item type tasks required as described. For the purpose of this item a crew consists of more than one non-management individual. The Contractor shall provide all labor and equipment necessary to perform the required task as described below under existing field conditions at various locations and at the sole discretion and direction of the facility operator in consultation with the Resident Engineer. The Contractor shall perform the necessary construction field support, while maintaining and protecting surface and subsurface facilities. The Contractor shall employ approved methods of operation, including the use of appropriate equipment and tools that will enable him to complete the field support operation work as described in the Item Type description below. Existing facilities that are encountered during the construction field support operation shall be supported and protected similar to those indicated on sketches JB 100A and 100B and in a manner suitable to the facility operator in consultation with the Resident Engineer and are deemed included in this item except as included under JB-402T. The Contractor shall properly dispose of all materials excavated away from site, which may require the use of hand held tools and equipment in order to ensure that the integrity of the underground utility facilities are not jeopardized. Care should be taken to avoid damage to existing utility facilities and structures, and to adjacent curbs, sidewalks, pavements and their foundations, and to avoid caving or sliding banks within excavations.

□

D. Method of Measurement

1 – Quantity - The quantity to be measured for payment shall be the number of actual crew hours (CRHRS.) provided by the Contractor for performing the various types of construction field support operation as directed by the facility operator in consultation with the Resident Engineer.

2 – Type – The unit type to be measured for payment shall be based on the actual task performed by the contractor and covered by the applicable Item Type. The tasks described within the Bid Item Type below are provided as a guide only as to the general nature of the various functions included, but these examples in no way limit the use of the item to these functions only. The contractor should use this information in order to approximate the various required crew sizes necessary to perform the work covered by this item in a productive, safe and efficient manner. The actual construction crew size required to perform the field support operation shall be determined solely by the contractor in order to perform the required construction field support operation. It is the responsibility of the contractor to provide appropriate field support crews capable of performing required tasks in a productive, safe and efficient manner. The actual crew performing the operation will not be considered, by the facility operator in consultation with the Resident Engineer, when determining the applicable item type, which shall be only as per the task performed.

Note: Only one measurement type will be used for each defined construction field support area.

Type .1 = Construction Field Support requiring an average size survey crew that will perform typical field survey functions and provide quality data analysis reports.

Type .2 = Construction Field Support requiring an average small size crew capable of performing various tasks not requiring the use of a machine or operator, which may include but are not limited to: opening/closing subsurface structure cover(s), setting/resetting MPT setup(s), assisting Utility Facility/Specialty crew(s) not included in JB 402T or JB 450.5, performing conduit occupancy identification, clean-up storage work-site area, etc.

Type .3 = Construction Field Support requiring an average medium size crew capable of performing various tasks which include the use of a machine and operator, which may include but are not limited to: excavations due to cable failures, including emergency type excavations, construct manhole enclosures, installing support system for utility facilities, dewatering utility structures and excavations, opening/closing traffic and/or pedestrian plates, etc not included in JB 402T or JB 450.5.

Type .4 = Construction Field Support requiring an average large size crew capable of performing various tasks that requires the use of multiple machine(s) and operator(s), which may include but are not limited to: assistance during heat contingency, welding, repositioning and placing large diameter pipe, etc.

Type .5 = Construction Field Support requiring an average small size crew when requested by the facility operator to assist the facility operator or speciality contractor hired by the facility operator in shifting and supporting the conduits during pipe-ripping operations and all else necessary as required to complete the work including but not limited to constructing temporary work platform and temporary weather protection.

□

E. Price to Cover

The unit price bid for the various construction field support items shall include the cost of all labor, materials, equipment, insurance, and incidentals necessary to provide construction field support, which may include but is not limited to working over, under, adjacent to, around, in between and in close proximity of surface and subsurface utility facilities and exposing, supporting, protecting and maintaining the integrity of the facilities without disruption of service to the general public, utility customers and in accordance with the Contract Documents at various locations approved by the Facility Operator in consultation with the Resident Engineer. The unit price shall also include openings and closings of plates, and cones, barrels, arrow-boards, etc. and installing, shifting, moving and relocating cones, barrels, arrow-boards, etc. as may be required in order to provide access to excavations and during specialty work being performed by others excluding work operations covered under JB402T. The unit price shall also include excavating by hand to expose existing structures. Any required removing, trucking, storing, and disposing of material shall be deemed included in the unit price bid. The unit price shall also include the cost of supporting and protecting all utilities encountered during the construction field support operation, as required except work operations covered under JB 402T. The unit price bid shall also include alternate methods for construction field support, which may include changes in equipment and special operations, and sequencing and the use of only all hand-held tools due to existing field conditions, including potential delays and extended performance. Any and all Contractor method changes and operation modifications employed for construction field support are deemed to be included in the price bid for this item. Work under this item may be paid in combination with other City, utility or facility accommodation Items bid under other contract items except where expressedly excluded from that item.

F. References

1. Sketches JB 100A, JB 100B

[NO FURTHER TEXT HERE.]

□

JB 603T - FURNISH AND INSTALL TELECOMMUNICATIONS CONDUITS

A. Description

Under this Section, the Contractor shall provide all labor, materials, equipment, insurance, and incidentals required to procure and install conduit for the purpose of installing the facility operator's utilities. Conduit runs shall be as shown on the contract drawings or as specified by the facility operator in consultation with the Resident Engineer.

B. Materials

Conduit shall consist of:
PVC – 2” and 4” diameter or 1 ¼” Quad, Type “C” as supplied by American Pipe and Plastics or approved equal
Steel - 4” diameter, ASTM A53, Schedule 40 or approved equal
All conduit including sleeves, couplings, bends, pulling lines, etc. shall be supplied by the Contractor and approved by the facility operator in consultation with the resident Engineer.
The Contractor shall supply all material (Mortar, Brick, etc.) to make repairs to opening(s) as approved by the facility operator in consultation with the Resident Engineer.

C. Method of Construction

The Contractor shall install the specified conduit(s) then rod, mandrel and wire (install pulling line) the new conduits. When conduit pipes are to be connected to existing underground ducts, manholes, or boxes, the Contractor, using hand-held tools only, shall cut existing conduit, to pick-up existing underground conduits with new conduits, make openings into manholes or boxes, install/connect the conduit, and make repairs to seal the openings in the structure.

Steel pipe shall be used for shallow cover and crossing or paralleling steam mains as directed by the facility operator in consultation with the Resident Engineer.

When the facility operator required a combination of conduit types and materials the facility operator will define the configuration of the conduit system and the location of each type within the conduit bank. All conduit shall be spaced 1 ½” both vertically and horizontally from the adjacent conduit(s). All conduits shall be encased in lean concrete (f’c = 1200 to 1500 psi maximum) which shall extend 2” beyond each face of the conduit formation, above and each side of the conduit formation.

If due to subsurface conditions, the cover is less than 20" from finished grade, the duct shall be protected with steel plates furnished by the facility operator(s) and measured for payment under Item JB 403.

The work shall be performed in accordance with the contract plans, specifications, and at the directions of the facility operator in consultation with the Resident Engineer.

D. Methods of Measurement

The quantity to be measured for payment shall be the number of linear feet (LF) of conduit trench for which conduit was furnished and installed:

1. 603T.1 - Install 1 ea. 2", 4” or 1 ¼” Quad” Conduit (PVC or Steel) in any Combination

□

2. 603T.2 - Install 2 ea. 2", 4" or 1 ¼" Quad Conduits (PVC or Steel) in any Combination
3. 603T.3 - Install 4 ea. 4" or 1 ¼" Quad Conduits (PVC or Steel) in any combination
4. 603T.4 - Install 6 ea. 4" or 1 ¼" Quad Conduits (PVC or Steel) in any combination
5. 603T.5 - Install 8 ea. 4" or 1 ¼" Quad Conduits (PVC or Steel) in any combination
6. 603T.6 - Install 12 ea. 4" or 1 ¼" Quad Conduits (PVC or Steel) in any combination
7. 603T.7 - Install 15 ea. 4" or 1 ¼" Quad Conduits (PVC or Steel) in any combination
8. 603T.8 - Install 24 ea. 4" or 1 ¼" Quad Conduits (PVC or Steel) in any combination
9. 603T.9 - Install 30 ea. 4" or 1 ¼" Quad Conduits (PVC or Steel) in any combination

A Quad, consisting of four 1 ¼" conduits shall be supplied as one unit. For purposes of measurement and payment each quad unit of four 1 ¼" ducts shall be counted as one duct.

For any equivalent combination not fitting the above categories payment shall be based on the next higher category.

E. Price to Cover

The unit price per linear foot of Conduit trench shall cover the cost of all labor, materials, equipment, insurance and incidentals necessary to furnish, install, rod, rope, and perform any other associated work required to install the conduit completely in place. Where conduits are to be connected to ducts, manholes or boxes, the cost of cutting and/or breaking into the ducts, manholes or boxes, installing and sealing the conduit, including duct plugs; and making repairs to the openings in the structure shall be considered as included in the unit price bid for the installation of the conduit. All acceptance testing, including passing a mandrill with a diameter of 1/8" less than the inside diameter of the duct through the entire length of the duct, as required by the facility operator shall be considered as included in the unit price.

Payment for trench excavation shall be paid under Item JB 405.

Steel protection plates shall be paid for under Item JB 403T

F. References

1. Sketch JB 603T
□□Item JB 405
□□American Pipe and Plastics, P.O. Box 577, Binghamton, N.Y. 13902

□
□
□

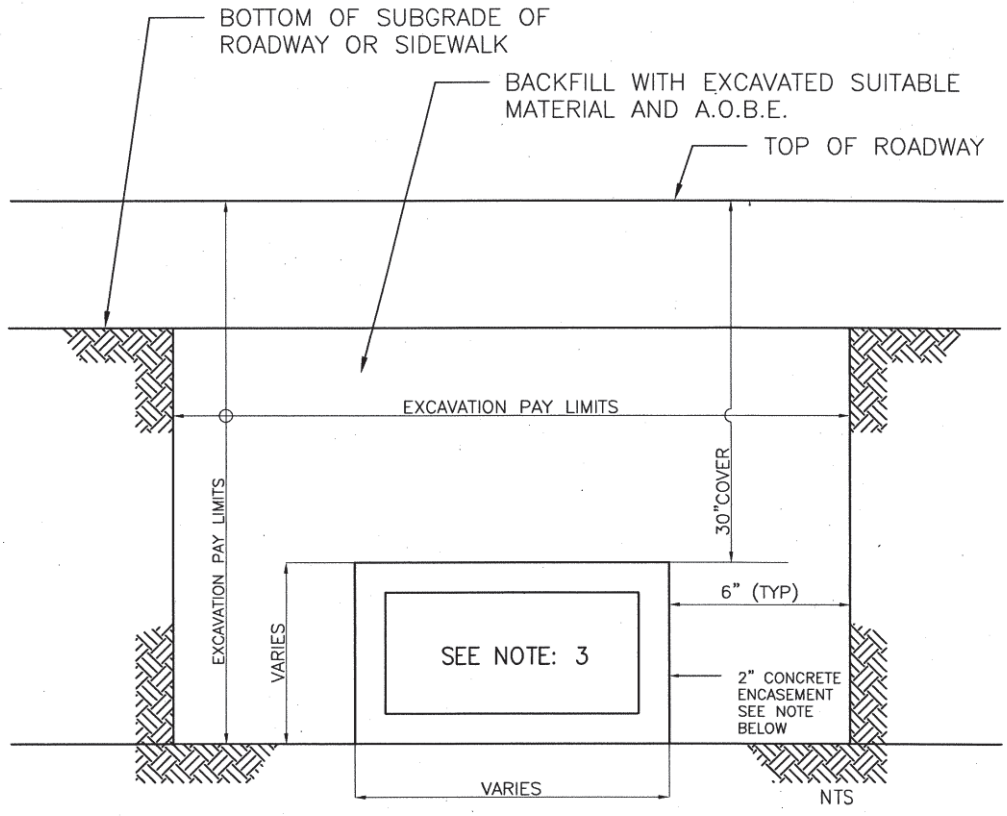

TYPICAL CONDUIT EXCAVATION AND BACKFILL

NOTES:

QUEENS, BROOKLYN & STATEN ISLAND

1– CONCRETE ENCASE REQUIRED IF TOP OF DUCTS IS 20" OR LESS FROM SURFACE AND ALL BENDS, SWEEPS AND CHANGE OF GRADE. FOR COVER LESS THAN 20", 3/8" STEEL (A36M) COVER PLATES IN ADDITION TO THE CONCRETE ENCASEMENT SHALL BE PROVIDED.

MANHATTAN & BRONX,

2– FOR COVER LESS THAN 20", 1/4" STEEL (A36M) COVER COVER PLATES IN ADDITION TO THE CONCRETE ENCASEMENT SHALL BE PROVIDED.

3– CONDUIT CONFIGURATION TO BE DETERMINED BY ECS/VERIZON REPRESENTATIVE.

J.B. SKETCH		
TRENCH EXCAVATION FOR CONDUIT		
09/13/2017	CONTRACT NO.	SKETCH NO. JB 603T

JB 610 - INSTALLATION OF STEEL GAS PIPE

A. Description

Under this section, the Contractor shall provide all labor, materials, equipment, insurance and incidentals required to install gas pipe and service pipe connections within the Consolidated Edison service territory. The Contractor shall satisfactorily clean, test and install new gas pipes, tracer wire, tracer wire termination boxes and appurtenances, complete as specified herein and as indicated on the contract drawings / layouts in accordance with the specifications of Con Edison Gas Engineering and as directed by the authorized Con Edison field representative. All work shall be performed in accordance with Con Edison Requirements, standard drawings and specifications referenced herein.

The Contractor shall install new gas utility facilities and appurtenances including but not limited to:

1. Non gas cost sharing gas facilities
2. Steel gas pipes
3. Phenolic board
4. Foam board
5. Adjustable & non-adjustable steel valve box risers
6. Pipe coatings (refer to Con Edison Specification G-8209)
7. Fittings
8. Valves

The trench to be excavated shall be determined by the size of the gas facility to be installed, extended or modified. The work shall be performed in accordance with all applicable specifications, and / or at the direction of the facility operator in consultation with the Resident Engineer and paid under other applicable contract bid items

B. Materials

All materials will be provided by Con Edison unless specifically noted otherwise. All materials provided by Con Edison shall be delivered to the Contractor at the construction site and unloaded by the Contractor.

C. Methods of Construction

The Contractor shall install the steel gas pipe(s), as shown on layouts and or drawings and sketches and as directed by the facility operator from designated facility operator service points and in accordance with the contract plans and Con Edison standard specifications. The method of construction shall include all labor, equipment and materials that are necessary to complete the installation of the steel gas pipe including cutting of the pipe, joining by welding, for each one (1) 40' random full length of pipe, complete with coating of pipe, installation of appurtenances and testing operations. The Contractor shall thoroughly clean each pipe length and fitting in order to remove all internal debris and foreign matter prior to the pipe being lowered into the trench. The installation of the new pipe must be performed by Operator Qualified mechanics. The Contractor must be approved by Con Edison.

A **'WARNING BURIED GAS LINES BELOW'** tape (class and stock number 024-6660) must be installed at a minimum of 12 inches above the top of the direct buried new replacement main.

Cathodic Protection

All buried or inserted steel pipe, fittings and appurtenances shall be coated and cathodically protected in accordance with the applicable Con Edison specifications

Protection plates shall be A36 steel 3/8" thick, provided by Con Edison.

Pressure Testing And Inerting:

The newly completed gas pipe shall be subjected to a combination strength-proof and leakage test by the Contractor in accordance with G-8204.

The Contractor shall install test connections as indicated on the drawings / layouts and EO-5261-C, "high Hats for Plugs and Nipples on 6 NPS – 30 NPS Steel Gas Mains 13.8 -2413.2 kPa".

All exposed coated steel gas mains where the coating is found damaged, shall be cleaned and the coating shall be replaced in kind in accordance with Con Edison specification G-8062.

Magnesium anodes and test stations shall be installed at the locations shown on the plans and layouts or as directed by the Engineer. Con Edison will supply thermit weld equipment. All test lead wires shall be tested by Con Edison's Corrosion Survey Section before backfilling.

D. Method of Measurement

The quantity to be paid for under this item shall be the actual number of linear feet (L.F.) of gas pipe installed for each pipe size, as measured along the center line of the pipe in its final position. The various types of pipe sizes are defined as follows:

JB 610.1 - Installation of Steel Gas Pipe - 1" Diameter
JB 610.1C - Installation of Steel Gas Pipe - 1-1/2" Diameter
JB 610.2 - Installation of Steel Gas Pipe - 2" Diameter
JB 610.3 - Installation of Steel Gas Pipe - 3" Diameter
JB 610.4 - Installation of Steel Gas Pipe - 4" Diameter
JB 610.6 - Installation of Steel Gas Pipe - 6" Diameter
JB 610.8 - Installation of Steel Gas Pipe - 8" Diameter
JB 610.12 - Installation of Steel Gas Pipe - 12" Diameter
JB 610.16 - Installation of Steel Gas Pipe - 16" Diameter
JB 610.20 - Installation of Steel Gas Pipe - 20" Diameter
JB 610.24 - Installation of Steel Gas Pipe - 24" Diameter
JB 610.30 - Installation of Steel Gas Pipe - 30" Diameter

E. Price to Cover

The unit price bid per linear feet (L.F.) shall include the cost of all labor, equipment and materials not provided by Con Edison as necessary to complete the work. The price per linear foot (L.F.) of steel gas pipe shall include pipe installation, cutting of pipe, joining by welding, installation of magnesium anodes, and installation of test stations, and repair of damaged pipe coatings and testing and inerting operations. Other work such as pavement saw-cutting, trench excavation, temporary timber sheeting, and backfilling with granular materials, compacting, valve installation, protection plates and pavement / curb restoration shall be paid for separately under other appropriate contract bid items.

F. References

The following Con Edison Standards apply to all materials:

1. ***Specifications:***

G-100,285:	Compression End Couplings, Tees, Elbows, Line Caps and Riser Tees for Gas pipe and Tubing.
G-100,281:	Weld End Forged Fittings For Gas Piping
SPEC. 900:	Installing Gas Mains, Regulator Stations and Services in New York City and Westchester County.
G-699:	Installation of Gas Services Regulators Vent Line Protectors.
G-1064:	Shielded Metal Arc Welding Procedure for Welding Steel Pipe and Fittings.
G-1065:	Qualification of Welders and Welding Procedures.
G-1066:	Qualification of Radiographers and Radiographic Procedures.
G-1070:	Radiographic Inspection of Pipeline Welds.
G-8003:	Transportation, Handling and Storage of Steel Pipe for Gas Mains & Services.
G-8005:	General Specification for the Installation of Gas Distribution Mains.
G-8005:	Plastic Pipe Main Installations Section 6.0.
G-8062:	Extruded Polyolefin Coating on Steel Gas Pipe.
G-8100:	General Specification for the Installation of Gas Services.
G-8129:	Purging Gas Mains, Services and Regulator Stations.
G-8153:	Reinforcing Compression Fittings
G-8194:	Street Opening Color Coding, Permit Signs at Worksite and Pavement Restoration Markers.
G-8195:	Qualification of Contractors' Maintenance Engineers and Field Supervisors Engaged in Gas Maintenance / Installations of Mains and/or services.
G-8201:	Electric Spark Inspection of Coating on Steel pipe.
G-8204:	Gas Mains and Services
G-8205	Corrosion Control of Steel Gas Distribution Mains and Services.
G-8209:	Field Coatings of Steel Pipe and Fittings Installed Underground and in Subsurface Structures.
G-8217:	Regulator Vent Line Protectors

2. *Drawings:*

EO-4067-G:	Precast Concrete Cover for Curb Valve Box in Sidewalk.
EO-4070-C:	Cover for Curb Valve Box Located in the Street.
EO-13987-B	Temporary Locking Device for Cast Iron Curb Gas Valve Box.
EO-19241-D:	Base for .75 NPS through 2 NPS Plastic Valves and 1.5 NPS and 2 NPS Steel Valves Used on Gas Mains and Services.
EO-3942-C3:	Wood Plugs for Use with Cast Iron and Steel Pipes Street Valve Box.
EO-4019-C:	Street Valve Box.
EO-4044-C:	Cast Iron Curb Valve Box 2 ft. Extension – Type CV24
EO-4045-C:	Cast Iron Curb Valve Box 2 ft. 8 inch Extension – Type CV32
EO-5102-D:	Precast Concrete Base for Street Valve Box.
EO-5261-C:	High Hats for Plugs and Nipples on 6" NPS through 30 "NPS Steel
EO-5315-D:	Bed Blocks and Wedges for Laying Gas Pipe.
EO-6799-C:	Protective Covers for Gas Main Installations.
EO-14134-C:	Thermit Weld Process for Attaching Wire to Pipe or Fittings.
EO-14620-C:	Segmenting Long Radius Forged Elbows.
EO-13911-B:	Installation of 6" NPS through 30" NPS Weld End Ball Valve and Valve Box for High Pressure Gas Mains.
EO-16954-B:	Sheeting for Trenches and Excavations.
EO-15636-C:	Field Fabricated Extension for Gas Valve Installations over 4 feet of Cover.
502664:	Installation of Electronic Markers on Gas Mains & Services Pressure Testing Requirements for New and Replacement.

JB 611 - INSTALLATION OF STEEL GAS PIPE FITTINGS

A. Description

Under this section, the Contractor shall provide all labor, materials, equipment, insurance and incidentals required to install gas pipe fittings and service pipe fittings within the Consolidated Edison service territory. The Contractor shall satisfactorily clean, test and install new gas pipe fittings, tracer wire, tracer wire termination boxes and appurtenances, complete as specified herein and as indicated on the contract drawings / layouts in accordance with the specifications of Con Edison Gas Engineering and as directed by the authorized Con Edison Field Representative. All work shall be performed in accordance with Con Edison requirements, standard drawings and specifications referenced herein.

The Contractor shall install new gas utility facility fittings and appurtenances including but not limited to:

1. Non cost sharing gas facilities
2. Steel gas pipes
3. Phenolic board
4. Foam board
5. Adjustable & non-adjustable steel valve box risers
6. Pipe coatings (refer to Con Edison Specification G-8209)
7. Fittings
8. Valves

The trench to be excavated shall be determined by the size of the gas facility fittings to be installed, extended or modified. The work shall be performed in accordance with all applicable specifications, and / or at the direction of the facility operator in consultation with the Resident Engineer and paid under other applicable contract bid items

B. Materials

All materials will be provided by Con Edison unless specifically noted otherwise. All materials provided by Con Edison will be delivered to the Contractor at the construction site and unloaded by the Contractor.

C. Methods of Construction

The Contractor shall install the steel gas pipe fitting(s), (including but not limited to valves, elbows, weld end caps and tees), as shown on layouts and or drawings and sketches and as directed by the facility operator from designated facility operator service points and in accordance with the contract plans and Con Edison standard specifications. The method of construction shall include all labor, equipment and materials that are necessary to complete the installation of the gas steel pipe fittings including miter cut, joining by welding, coating of pipe fitting, and appurtenances complete, and testing operations. The Contractor shall thoroughly clean each pipe fitting in order to remove all internal dirt and foreign matter prior to the pipe being lowered into the trench. The installation of the

□□□□□□□□□□0□□

□□□□□□□□□□□□□□□□0□0□

□□□□□□

new pipe must be performed by Operator Qualified mechanics. The Contractor must be approved by Con Edison.

Fittings:

Fittings shall be defined as couplings, forged fittings, and valves, insulating joints, weld end cap and weldolets. All forged bends shall conform to Con Edison Specification G-100, 281, "Welded Forged Fittings for Gas Piping. Prior to installation, each insulating joint shall be checked with a continuity tester by Con Edison. The insulating joint shall not be installed until the Contractor has verified with the Con Edison Field Representative that a continuity test is acceptable. The cost for testing the insulation joint shall be included in the unit price for the appropriate size of the gas main.

A **'WARNING BURIED GAS LINES BELOW'** tape (class and stock number 024-6660) must be installed at a **minimum** of 12 inches above the top of the direct buried new / replacement main.

Cathodic Protection

All buried or inserted steel pipe fittings and appurtenances shall be coated and cathodically protected in accordance with the applicable Con Edison Specifications

Protection Plates shall be A36 steel 3/8" thick, provided by Con Edison.

Pressure Testing And Inerting:

The newly completed gas pipe fitting(s) shall be subjected to a combination strength-proof and leakage test by the Contractor in accordance with G-8204

The Contractor shall install test connections as indicated on the drawings / layouts and EO-5261-C, "high Hats for Plugs and Nipples on 6 NPS – 30 NPS Steel Gas Mains 13.8 -2413.2 kPa".

All exposed coated steel gas pipe fittings where the coating is found damaged shall be cleaned and the coating shall be replaced in kind in accordance with Con Edison Specification G-8062.

Magnesium anodes and test stations shall be installed at the locations shown on the plans and layouts or as directed by the Engineer. Con Edison will supply thermit weld equipment. All test lead wires shall be tested by Con Edison's Corrosion Survey Section before backfilling.

D. Method of Measurement

The quantity to be paid for under this item shall be the actual number of each (EA) steel gas pipe fitting installed for each pipe size. The various types of pipe sizes are defined as follows:

JB 611.1 - Installation of Steel Gas Pipe Fitting - 1" Diameter
JB 611.1C - Installation of Steel Gas Pipe Fitting - 1-1/2" Diameter
JB 611.2 - Installation of Steel Gas Pipe Fitting - 2" Diameter
JB 611.3 - Installation of Steel Gas Pipe Fitting - 3" Diameter
JB 611.4 - Installation of Steel Gas Pipe Fitting - 4" Diameter
JB 611.6 - Installation of Steel Gas Pipe Fitting - 6" Diameter
JB 611.8 - Installation of Steel Gas Pipe Fitting - 8" Diameter

JB 611.12 - Installation of Steel Gas Pipe Fitting - 12" Diameter
JB 611.16 - Installation of Steel Gas Pipe Fitting - 16" Diameter
JB 611.20 - Installation of Steel Gas Pipe Fitting - 20" Diameter
JB 611.24 - Installation of Steel Gas Pipe Fitting - 24" Diameter
JB 611.30 - Installation of Steel Gas Pipe Fitting - 30" Diameter

E. Price to Cover

The unit price bid per each (EA) shall include the cost of all labor, equipment and materials not provided by Con Edison as necessary to completely install the steel gas pipe fitting. The price per each (EA) fitting shall include pipe fitting installation, (including but not limited to valves, elbows, weld end caps and tees), miter cut, joining by welding, installation of magnesium anodes, and installation of test stations, and repair of damaged pipe coatings and testing and inerting operations. Other work such as pavement saw-cutting, trench excavation, temporary timber sheeting, and backfilling with granular materials, compacting, valve installation, protection plates and pavement / curb restoration shall be paid for separately under other appropriate contract bid items.

F. References

The following Con Edison Standards apply to all materials:

1. Specifications:

G-100,285:	Compression End Couplings, Tees, Elbows, Line Caps and Riser Tees for Gas pipe and Tubing.
G-100,281:	Weld End Forged Fittings For Gas Piping
SPEC. 900:	Installing Gas Mains, Regulator Stations and Services in New York City and Westchester County.
G-699:	Installation of Gas Services Regulators Vent Line Protectors.
G-1064:	Shielded Metal Arc Welding Procedure for Welding Steel Pipe and Fittings.
G-1065:	Qualification of Welders and Welding Procedures.
G-1066:	Qualification of Radiographers and Radiographic Procedures.
G-1070:	Radiographic Inspection of Pipeline Welds.
G-8003:	Transportation, Handling and Storage of Steel Pipe for Gas Mains & Services.
G-8005:	General Specification for the Installation of Gas Distribution Mains.
G-8005:	Plastic Pipe Main Installations Section 6.0.
G-8062:	Extruded Polyolefin Coating on Steel Gas Pipe.
G-8100:	General Specification for the Installation of Gas Services.
G-8129:	Purging Gas Mains, Services and Regulator Stations.
G-8153:	Reinforcing Compression Fittings
G-8194:	Street Opening Color Coding, Permit Signs at Worksite and Pavement Restoration Markers.
G-8195:	Qualification of Contractors' Maintenance Engineers and Field Supervisors Engaged in Gas Maintenance / Installations of Mains and/or services.
G-8201:	Electric Spark Inspection of Coating on Steel pipe.
G-8204:	Gas Mains and Services
G-8205	Corrosion Control of Steel Gas Distribution Mains and Services.
G-8209:	Field Coatings of Steel Pipe and Fittings Installed Underground and in Subsurface Structures.
G-8217:	Regulator Vent Line Protectors

2. *Drawings:*

EO-4067-G: Precast Concrete Cover for Curb Valve Box in Sidewalk.
EO-4070-C: Cover for Curb Valve Box Located in the Street.
EO-13987-B Temporary Locking Device for Cast Iron Curb Gas Valve Box.
EO-19241-D: Base for .75 NPS through 2 NPS Plastic Valves and 1.5 NPS and 2 NPS Steel Valves Used on Gas Mains and Services.
EO-3942-C3: Wood Plugs for Use with Cast Iron and Steel Pipes Street Valve Box.
EO-4019-C: Street Valve Box.
EO-4044-C: Cast Iron Curb Valve Box 2 ft. Extension – Type CV24
EO-4045-C: Cast Iron Curb Valve Box 2 ft. 8 inch Extension – Type CV32
EO-5102-D: Precast Concrete Base for Street Valve Box.
EO-5261-C: High Hats for Plugs and Nipples on 6" NPS through 30 "NPS Steel
EO-5315-D: Bed Blocks and Wedges for Laying Gas Pipe.
EO-6799-C: Protective Covers for Gas Main Installations.
EO-14134-C: Thermit Weld Process for Attaching Wire to Pipe or Fittings.
EO-14620-C: Segmenting Long Radius Forged Elbows.
EO-13911-B: Installation of 6" NPS through 30" NPS Weld End Ball Valve and Valve Box for High Pressure Gas Mains.
EO-16954-B: Sheeting for Trenches and Excavations.
EO-15636-C: Field Fabricated Extension for Gas Valve Installations over 4 feet of Cover.
502664: Installation of Electronic Markers on Gas Mains & Services Pressure Testing Requirements for New and Replacement.

JB 615 - INSTALLATION OF PLASTIC GAS PIPE

A. Description

Under this section, the Contractor shall provide all labor, materials, equipment, insurance and incidentals required to install plastic gas pipes and service connections within the Consolidated Edison service territory. The Contractor shall satisfactorily clean, test and install new plastic gas pipes, tracer wire, tracer wire termination boxes and appurtenances, complete as specified herein and as indicated on the contract drawings / layouts in accordance with the specifications of Con Edison Gas Engineering and as directed by the authorized Con Edison representative. All work shall be performed in accordance with Con Edison Requirements, standard drawings and specifications referenced herein.

The Contractor shall install new Gas Utility Facilities and appurtenances including but not limited to:

1. Non cost sharing gas facilities
2. Plastic pipes
3. Phenolic board
4. Foam board
5. Adjustable & non-adjustable valve box risers
6. Pipe coatings (refer to Con Edison Specification G-8209)
7. Molded fittings
8. Plastic valves

The trench to be excavated shall be determined by the size of the Gas facility to be installed, extended or modified. The work shall be performed in accordance with all applicable specifications, and / or at the direction of the facility operator in consultation with the Resident Engineer.

B. Materials

All materials will be provided by Con Edison unless specifically noted otherwise. All materials provided by Con Edison will be delivered to the Contractor at the construction site and unloaded by the Contractor.

C. Methods of Construction

The Contractor shall install the plastic gas pipe(s), as shown on layouts and or drawings and sketches and as directed by the facility operator from designated facility operator service points and in accordance with the contract plans and Con Edison Standard specifications. The method of construction shall include all labor, equipment and materials that are necessary to complete the installation of the plastic gas pipe including cutting of the pipe, joining by fusing, for each one (1) 40' random full length of pipe, and appurtenances complete, and testing operations. The Contractor shall thoroughly clean each pipe length and fitting in order to remove all internal debris and foreign matter prior to the pipe being lowered into the trench. The installation of the new pipe must be performed by Operator Qualified mechanics. The Contractor must be approved by Con Edison.

A **'WARNING BURIED GAS LINES BELOW'** tape (class and stock number 024-6660) must be installed at a **minimum** of 12 inches above the top of the direct buried new / replacement main. When new / replacement mains are inserted, the tape is to be installed above all exposed pipe in tie-in and service excavations.

Protection Plates shall be A36 steel 3/8" thick, provided by Con Edison.

Pressure Testing Inerting:

The newly completed gas pipe shall be subjected to a combination strength-proof and leakage test by the Contractor in accordance with G-8204

The Contractor shall furnish all material, transportation and equipment, including gas and air necessary to perform and complete the pressure testing and inerting operations, including the equipment used to record the test. Inerting shall be defined as the process of displacing air or natural gas in a facility with an inert gas.

D. Method of Measurement

The quantity to be paid for under this item shall be the actual number of linear feet (LF) of plastic gas pipe installed for each pipe size, as measured along the center line of the pipe in its final position.

JB 615.1A - Installation of Plastic Gas Pipe – ½" Diameter
JB 615.1 - Installation of Plastic Gas Pipe - 1" Diameter
JB 615.1B - Installation of Plastic Gas Pipe - 1-1/4" Diameter
JB 615.1C - Installation of Plastic Gas Pipe - 1-1/2" Diameter
JB 615.2 - Installation of Plastic Gas Pipe - 2" Diameter
JB 615.3 - Installation of Plastic Gas Pipe - 3" Diameter
JB 615.4 - Installation of Plastic Gas Pipe - 4" Diameter
JB 615.6 - Installation of Plastic Gas Pipe - 6" Diameter
JB 615.8 - Installation of Plastic Gas Pipe - 8" Diameter
JB 615.10 - Installation of Plastic Gas Pipe - 10" Diameter
JB 615.12 - Installation of Plastic Gas Pipe - 12" Diameter
JB 615.16 - Installation of Plastic Gas Pipe - 16" Diameter

E. Price to Cover

The unit price bid per linear feet (LF) shall include the cost of all labor, equipment and materials not provided by Con Edison as necessary to complete the work. The price per linear foot (LF) of plastic gas pipe shall include pipe installation, cutting of pipe, joining by fusing, and all other work necessary to completely install the plastic gas pipe, and testing and inerting operations. Other work such as pavement saw-cutting, trench excavation, temporary timber sheeting, and backfilling with granular materials, compacting, valve installation, protection plates and pavement / curb restoration shall be paid for separately under the appropriate contract bid items.

F. References

The following Con Edison Standards apply to all materials:

1. ***Specifications:***

G-100,285:	Compression End Couplings, Tees, Elbows, Line Caps and Riser Tees for Gas pipe and Tubing.
G-100,281:	Weld End Forged Fittings For Gas Piping
SPEC. 900:	Installing Gas Mains, Regulator Stations and Services in New York City and Westchester County.
G-699:	Installation of Gas Services Regulators Vent Line Protectors.
G-1064:	Shielded Metal Arc Welding Procedure for Welding Steel Pipe and Fittings.
G-1065:	Qualification of Welders and Welding Procedures.
G-1066:	Qualification of Radiographers and Radiographic Procedures.
G-1070:	Radiographic Inspection of Pipeline Welds.
G-8003:	Transportation, Handling and Storage of Steel Pipe for Gas Mains & Services.
G-8005:	General Specification for the Installation of Gas Distribution Mains.
G-8005:	Plastic Pipe Main Installations Section 6.0.
G-8062:	Extruded Polyolefin Coating on Steel Gas Pipe.
G-8100:	General Specification for the Installation of Gas Services.
G-8129:	Purging Gas Mains, Services and Regulator Stations.
G-8153:	Reinforcing Compression Fittings
G-8194:	Street Opening Color Coding, Permit Signs at Worksite and Pavement Restoration Markers.
G-8195:	Qualification of Contractors' Maintenance Engineers and Field Supervisors Engaged in Gas Maintenance / Installations of Mains and/or services.
G-8201:	Electric Spark Inspection of Coating on Steel pipe.
G-8204:	Gas Mains and Services
G-8205:	Corrosion Control of Steel Gas Distribution Mains and Services.
G-8209:	Field Coatings of Steel Pipe and Fittings Installed Underground and in Subsurface Structures.
G-8217:	Regulator Vent Line Protectors

2. ***Drawings:***

EO-4067-G:	Precast Concrete Cover for Curb Valve Box in Sidewalk.
EO-4070-C:	Cover for Curb Valve Box Located in the Street.
EO-13987-B:	Temporary Locking Device for Cast Iron Curb Gas Valve Box.
EO-19241-D:	Base for .75 NPS through 2 NPS Plastic Valves and 1.5 NPS and 2 NPS Steel Valves Used on Gas Mains and Services.
EO-3942-C3:	Wood Plugs for Use with Cast Iron and Steel Pipes Street Valve Box.
EO-4019-C:	Street Valve Box.
EO-4044-C:	Cast Iron Curb Valve Box 2 ft. Extension – Type CV24
EO-4045-C:	Cast Iron Curb Valve Box 2 ft. 8 inch Extension – Type CV32
EO-5102-D:	Precast Concrete Base for Street Valve Box.
EO-5261-C:	High Hats for Plugs and Nipples on 6" NPS through 30 "NPS Steel
EO-5315-D:	Bed Blocks and Wedges for Laying Gas Pipe.
EO-6799-C:	Protective Covers for Gas Main Installations.
EO-14134-C:	Thermit Weld Process for Attaching Wire to Pipe or Fittings.
EO-14620-C:	Segmenting Long Radius Forged Elbows.
EO-13911-B:	Installation of 6" NPS through 30" NPS Weld End Ball Valve and Valve Box for High Pressure Gas Mains.

EO-16954-B: Sheeting for Trenches and Excavations.
EO-15636-C: Field Fabricated Extension for Gas Valve Installations over 4 feet of Cover.
502664: Installation of Electronic Markers on Gas Mains & Services Pressure Testing Requirements for New and Replacement.

JB 616 - INSTALLATION OF PLASTIC GAS PIPE FITTING

A. Description

Under this section, the Contractor shall provide all labor, materials, equipment, insurance and incidentals required to install plastic gas pipe fittings and service pipe fitting connections within the Consolidated Edison service territory. The Contractor shall satisfactorily clean, test and install new plastic gas pipe fittings, tracer wire, tracer wire termination boxes and appurtenances, complete as specified herein and as indicated on the contract drawings / layouts in accordance with the specifications of Con Edison Gas Engineering and as directed by the authorized Con Edison representative. All work shall be performed in accordance with Con Edison Requirements, standard drawings and specifications referenced herein.

The Contractor shall install new Gas Utility Facility Fittings and appurtenances including but not limited to:

1. Non Cost Sharing Gas Facilities
2. Plastic Pipes
3. Phenolic Board
4. Foam Board
5. Adjustable & Non Adjustable Valve Box Risers
6. Pipe Coatings Refer to Con Edison Specification G-8209
7. Molded Fittings
8. Plastic Valves

The trench to be excavated shall be determined by the size of the Gas facility to be installed, extended or modified. The work shall be performed in accordance with all applicable specifications, and / or at the direction of the facility operator in consultation with the Resident Engineer and paid under other contract bid items.

B. Materials

All materials will be provided by Con Edison unless specifically noted otherwise. All materials provided by Con Edison will be delivered to the Contractor at the construction site and unloaded by the Contractor.

C. Methods of Construction

The Contractor shall install the plastic gas pipe fitting(s), (including but not limited to valves, elbows, weld end caps and tees) as shown on layouts and or drawings and sketches and as directed by the facility operator from designated facility operator service points and in accordance with the contract plans and Con Edison Standard specifications. The method of construction shall include all labor, equipment and materials that are necessary to complete the installation of the plastic gas pipe fitting(s) including miter cut, joining the pipe by fusing, and appurtenances complete, and testing operations. The Contractor shall thoroughly clean each pipe length and fitting in order to remove all internal dirt and foreign matter prior to the pipe being lowered into the trench. The installation of the

new pipe must be performed by Operator Qualified mechanics. The Contractor must be approved by Con Edison.

FITTINGS:

Plastic Valves

Plastic valves are approved up to and including 16" diameter. Where the same diameter valve comes in reduced port and full port openings, a full port valve shall be used (unless otherwise noted on a layout or requested by Gas Distribution Engineering).

Plastic Molded Fittings

Plastic molded fittings (caps, elbows, reducers, tees and valves) can only be joined to plastic pipe or other molded fittings by butt fusion or electrofusion. Plastic molded fittings can never be joined to plastic pipe or other molded fittings by mechanical fittings.
See Spec G-8005.

A **'WARNING BURIED GAS LINES BELOW'** tape (class and stock number 024-6660) must be installed at a **minimum** of 12 inches above the top of the direct buried new / replacement main. When new / replacement mains are inserted, the tape is to be installed above all exposed pipe in tie-in and service excavations.

Protection Plates shall be A36 steel 3/8" thick, provided by Con Edison.

Pressure Testing Inerting:

The newly completed gas pipe shall be subjected to a combination strength-proof and leakage test by the Contractor in accordance with G-8204

The Contractor shall furnish all material, transportation and equipment, including gas and air necessary to perform and complete the pressure testing and inerting operations, including the equipment used to record the test. Inerting shall be defined as the process of displacing air or natural gas in a facility with an inert gas.

D. Method of Measurement

The quantity to be paid for under this item shall be the actual number of each (EA) plastic gas pipe fitting installed for each pipe size. The various types of pipe sizes are defined as follows:

JB 616.1A - Installation of Plastic Gas Pipe Fitting - ½" Diameter
JB 616.1 - Installation of Plastic Gas Pipe Fitting - 1" Diameter
JB 616.1B - Installation of Plastic Gas Pipe Fitting - 1-1/4" Diameter
JB 616.1C - Installation of Plastic Gas Pipe Fitting - 1-1/2" Diameter
JB 616.2 - Installation of Plastic Gas Pipe Fitting - 2" Diameter
JB 616.3 - Installation of Plastic Gas Pipe Fitting - 3" Diameter
JB 616.4 - Installation of Plastic Gas Pipe Fitting - 4" Diameter
JB 616.6 - Installation of Plastic Gas Pipe Fitting - 6" Diameter
JB 616.8 - Installation of Plastic Gas Pipe Fitting - 8" Diameter
JB 616.10 - Installation of Plastic Gas Pipe Fitting - 10" Diameter
JB 616.12 - Installation of Plastic Gas Pipe Fitting - 12" Diameter
JB 616.16 - Installation of Plastic Gas Pipe Fitting - 16" Diameter

E. Price to Cover

The unit price bid per each (EA) shall include the cost of all labor, equipment and materials not provided by Con Edison as necessary to completely install the plastic gas pipe fitting. The price per each (EA) plastic gas pipe fitting shall include pipe installation, (including but not limited to valves, elbows, weld end caps and tees), miter cut, joining by fusing, and all other work necessary to completely install the plastic gas pipe fitting, and testing and inerting operations. Other work such as pavement saw-cutting, trench excavation, temporary timber sheeting, and backfilling with granular materials, compacting, valve installation, protection plates and pavement / curb restoration shall be paid for separately under the appropriate contract bid items.

F. References

The following Con Edison Standards apply to all materials:

1. *Specifications:*

G-100,285:	Compression End Couplings, Tees, Elbows, Line Caps and Riser Tees for Gas pipe and Tubing.
G-100,281:	Weld End Forged Fittings For Gas Piping
SPEC. 900:	Installing Gas Mains, Regulator Stations and Services in New York City and Westchester County.
G-699:	Installation of Gas Services Regulators Vent Line Protectors.
G-1064:	Shielded Metal Arc Welding Procedure for Welding Steel Pipe and Fittings.
G-1065:	Qualification of Welders and Welding Procedures.
G-1066:	Qualification of Radiographers and Radiographic Procedures.
G-1070:	Radiographic Inspection of Pipeline Welds.
G-8003:	Transportation, Handling and Storage of Steel Pipe for Gas Mains & Services.
G-8005:	General Specification for the Installation of Gas Distribution Mains.
G-8005:	Plastic Pipe Main Installations Section 6.0.
G-8062:	Extruded Polyolefin Coating on Steel Gas Pipe.
G-8100:	General Specification for the Installation of Gas Services.
G-8129:	Purging Gas Mains, Services and Regulator Stations.
G-8153:	Reinforcing Compression Fittings
G-8194:	Street Opening Color Coding, Permit Signs at Worksite and Pavement Restoration Markers.
G-8195:	Qualification of Contractors' Maintenance Engineers and Field Supervisors Engaged in Gas Maintenance / Installations of Mains and/or services.
G-8201:	Electric Spark Inspection of Coating on Steel pipe.
G-8204:	Gas Mains and Services
G-8205:	Corrosion Control of Steel Gas Distribution Mains and Services.
G-8209:	Field Coatings of Steel Pipe and Fittings Installed Underground and in Subsurface Structures.
G-8217:	Regulator Vent Line Protectors

2. *Drawings:*

EO-4067-G: Precast Concrete Cover for Curb Valve Box in Sidewalk.
EO-4070-C: Cover for Curb Valve Box Located in the Street.
EO-13987-B: Temporary Locking Device for Cast Iron Curb Gas Valve Box.
EO-19241-D: Base for .75 NPS through 2 NPS Plastic Valves and 1.5 NPS and 2 NPS Steel Valves Used on Gas Mains and Services.
EO-3942-C3: Wood Plugs for Use with Cast Iron and Steel Pipes Street Valve Box.
EO-4019-C: Street Valve Box.
EO-4044-C: Cast Iron Curb Valve Box 2 ft. Extension – Type CV24
EO-4045-C: Cast Iron Curb Valve Box 2 ft. 8 inch Extension – Type CV32
EO-5102-D: Precast Concrete Base for Street Valve Box.
EO-5261-C: High Hats for Plugs and Nipples on 6" NPS through 30 "NPS Steel
EO-5315-D: Bed Blocks and Wedges for Laying Gas Pipe.
EO-6799-C: Protective Covers for Gas Main Installations.
EO-14134-C: Thermit Weld Process for Attaching Wire to Pipe or Fittings.
EO-14620-C: Segmenting Long Radius Forged Elbows.
EO-13911-B: Installation of 6" NPS through 30" NPS Weld End Ball Valve and Valve Box for High Pressure Gas Mains.
EO-16954-B: Sheeting for Trenches and Excavations.
EO-15636-C: Field Fabricated Extension for Gas Valve Installations over 4 feet of Cover.
502664: Installation of Electronic Markers on Gas Mains & Services Pressure Testing Requirements for New and Replacement.

JB 620 - INSTALLATION OF STEAM PIPE

A. Description

Under this section, the Contractor shall provide all labor, materials, equipment, insurance and incidentals required to install steam pipes and service connections. The Contractor shall satisfactorily clean and test install new steam pipes, and steam pipe insulation and steam housing and appurtenances, complete as specified herein and as indicated on the contract drawings / layouts and in accordance with the specifications and directions of the authorized Con Edison field representative in consultation with Con Edison Steam Engineering. All work shall be performed in accordance with Con Edison Requirements, standard drawings and specifications referenced herein.

B. Materials

All materials will be provided by Con Edison unless specifically noted otherwise. All materials provided by Con Edison will be delivered to the Contractor at the construction site and unloaded by the Contractor.

Pipe:
All piping shall conform to Piping Design Criteria for The Steam Distribution System Volume 1 prepared by ABS Consulting Section 4.0 for the Consolidated Edison Company and Con Edison Specifications S-9035-9, S-9036-10 and S-9040-4.

C. Methods of Construction:

The Contractor shall install the steam pipe(s), as shown on layouts and or drawings and sketches and as directed by the facility operator from designated facility operator service points and in accordance with the contract plans and Con Edison Standard specifications. The method of construction shall include all labor, equipment and materials that are necessary to complete the installation of the steel steam pipe including cutting of the pipe, joining by welding, one (1) for each 40' random full length of pipe, coating of pipe, insulation installation, concrete housing installation and appurtenances complete, and testing operations.

D. Method of Measurement:

The quantity to be paid for under this item shall be the actual number of linear feet (LF) of pipe installed for each size, as measured along the center line of the pipe in its final position.

JB 620.1 Installation of Steam Pipe - 2" Diameter
JB 620.2 Installation of Steam Pipe - 3" Diameter
JB 620.3 Installation of Steam Pipe - 4" Diameter

JB 620.4 Installation of Steam Pipe - 6" Diameter
JB 620.5 Installation of Steam Pipe - 8" Diameter
JB 620.6 Installation of Steam Pipe - 10" Diameter
JB 620.7 Installation of Steam Pipe - 12" Diameter
JB 620.8 Installation of Steam Pipe - 14" Diameter
JB 620.9 Installation of Steam Pipe - 16" Diameter
JB 620.10 Installation of Steam Pipe - 18" Diameter
JB 620.11 Installation of Steam Pipe - 20" Diameter
JB 620.12 Installation of Steam Pipe - 24" Diameter
JB 620.13 Installation of Steam Pipe - 30" Diameter
JB 620.14 Installation of Steam Pipe - 36" Diameter

E. Price To Cover:

The unit price bid per linear feet (LF) of pipe shall include the cost of all labor, equipment and materials not provided by Con Edison as necessary to complete the work. The price per linear foot of steel steam pipe shall include pipe installation, cutting of pipe, joining by welding, one (1) for each 40' random full length of pipe, coating of pipe, insulation installation, concrete housing installation and appurtenances complete, and testing operations.

Other work such as pavement saw-cutting, trench excavation, temporary timber sheeting, and backfilling with granular materials, compacting, and pavement restoration shall be paid for separately under the appropriate contract item.

F. References:

1. Specifications

EO-11066: F.C. Housing for Steam Mains 2" to 30"
EO-17029: F.C. of Concrete Housing for 2", 3" & 4" Steam Services
EO-9382: Inside & Outside Formwork for Concrete Housing for Steam Mains 2" – 30"
EO-17115: Pipe Supports / Pedestal Supports – Engineering Orders:
EO-6874:
EO-7412:
EO-14936:
EO-13250:
EO-324786:
EO-13167:

Refer to ABS Consulting Specification Volume One Page 21 of 21 for a complete listing of technical specifications.

JB 621 - INSTALLATION OF STEAM PIPE FITTINGS

A. Description:

Under this section, the City Contractor shall provide all labor, materials, equipment, insurance and incidentals required to install steam pipe fittings and service connection fittings. The Contractor shall install new steam pipe fittings, insulation, encase steam pipe and fittings in concrete housing with waterproofing membrane and appurtenances, complete as specified herein and as indicated on the contract drawings/layouts and in accordance with the specifications and directions of the authorized Con Edison field representative in consultation with Con Edison Steam Engineering. All work shall be performed in accordance with Con Edison requirements, standard drawings and specifications referenced herein.

B. Materials:

All materials will be provided by Con Edison unless specifically noted otherwise. All materials provided by Con Edison will be delivered to the Contractor at the construction site and unloaded by the Contractor.

Pipe Fittings:

All piping shall conform to Consolidated Edison Company Specification S-9035-11, ASTM A-53 (entitled "Standard Specification for Pipe, Steel, Black and Hot-Dipped, Zinc-Coated, Welded and Seamless"), Grade B Type S (Seamless). Steam pipe fittings shall conform to the latest Con Edison Specification S-9040.

C. Methods of Construction:

The Contractor shall install the steam pipe fittings, including but not limited to valves, elbows, weld end caps and tees as shown on layouts and or drawings and sketches and as directed by the facility operator and in accordance with the contract plans and Con Edison Standard specifications and Engineering Orders (EO). The method of construction shall include all labor, equipment and materials that are necessary to complete the installation of the steam pipe fittings including miter cuts, weld(s), insulation, concrete housing with waterproofing membrane and appurtenances complete, and testing operations. All welds must be performed in accordance with Specification S-11944 and radiographically inspected as per specification G-1070. The elevation and line of the steam main may be changed to field conditions, and prior to any changes in the field must be reported to Steam Distribution Engineering for approval. In addition, the existing insulation may contain asbestos, and it should be handled and disposed in accordance with Con Edison's Corporate Asbestos Management Manual. An ACP-7 permit will need to be filed for any abatement work. All identified work shall be performed by a steam approved and qualified contractor.

D. Method of Measurement:

The quantity to be paid for under this item shall be the actual number of each (EA) pipe fitting installed for each size of pipe.

JB 621.1	Installation of Steam Pipe Fitting - 2" Diameter
JB 621.2	Installation of Steam Pipe Fitting - 3" Diameter
JB 621.3	Installation of Steam Pipe Fitting - 4" Diameter
JB 621.4	Installation of Steam Pipe Fitting - 6" Diameter
JB 621.5	Installation of Steam Pipe Fitting - 8" Diameter
JB 621.6	Installation of Steam Pipe Fitting - 10" Diameter
JB 621.7	Installation of Steam Pipe Fitting - 12" Diameter
JB 621.8	Installation of Steam Pipe Fitting - 14" Diameter
JB 621.9	Installation of Steam Pipe Fitting - 16" Diameter
JB 621.10	Installation of Steam Pipe Fitting - 18" Diameter
JB 621.11	Installation of Steam Pipe Fitting - 20" Diameter
JB 621.12	Installation of Steam Pipe Fitting - 24" Diameter
JB 621.13	Installation of Steam Pipe Fitting - 30" Diameter
JB 621.14	Installation of Steam Pipe Fitting - 36" Diameter

E. Price To Cover:

The unit price bid shall be the actual number of each (EA) pipe fitting installed for each size of pipe including the cost of all labor, equipment and materials (not provided by Con Edison) necessary to complete all associated installations identified in the project scoping document and as prescribed in the layout(s). The price per each steam fitting shall include the installation of the steam pipe fitting including miter cuts, weld(s), and pipe fittings, installing pipe insulation, encase all piping in concrete housing and appurtenances complete and testing operations.

Other work such as pavement saw-cutting, trench excavation, temporary timber sheeting, and backfilling with granular materials, compacting, and pavement restoration shall be paid for separately under the appropriate contract item.

F. References:

1. ***Specifications***

S-9035:	Steel Pipe for Steam Mains and Services for 200 psig Distribution System
S-9040:	Steel Socket or Butt Welded Fittings for Use in the 200 and 400 psig Steam Distribution Systems
S-11924:	Procedure for Removal of Housing and Asbestos Insulation from Buried Steam Main
S-9057:	Thermal Insulation for Field-Fabricated Pipe and Fittings on Underground Steam Mains and Services
S-12004:	Procedures for installing waterproofing membranes for steam manhole and housing in the tidal area
G-1070	

JB 622 – FURNISH, DELIVERING AND INSTALLING STRAIGHT STEEL PIPE STEAM CASING

A. Description

Furnishing, delivering and installing steel pipe for use as casing pipe for existing mains and services on the steam distribution system.

B. Materials

Pipe material shall conform to Con Edison Specification S-9037-7, Casing for pipe use on steam mains and service piping, and shall be made in the United States of America.

Pipe shall be spiral butt weld conduit conforming to ASTM A-139 entitled "Standard Specification for Electric-Fusion (Arc)-Welded Steel Pipe (NPS 4 and Over)."

For pipe sleeves attached to dresser couplings at building walls, use ASTM A-53 entitled "Standard Specification for Pipe, Steel, Black and Hot-Dipped, Zinc-Coated, Welded and Seamless," conforming to Con Edison Specification S-9035-12 or S-9035-13.

Pipe conforming to ASTM A-252 entitled "Standard Specification for Welded and Seamless Streel Pipe Piles" is a suitable substitution.

Nominal pipe size, outside diameter, wall thickness and weight of steel pipe to be approved in writing by Con Edison Steam Group prior to manufacturing.

The interior of the pipe shall be smooth, free of scale, oil, grease and other projections.

The requirements for inspection and acceptance, as described in the detailed specification for material referenced above shall in all cases prevail. Con Edison may elect to arrange for inspection at the mill.

Additional proposed controlled low strength material (Item no. ESCR-7.18) shall be installed around the outermost new steam shells for the lengths of steel pipe indicated by Con Edison per the latest version of Contract Drawing F702, Utility Crossings Type C.

C. Methods of Construction

Steam casing pipe shall be furnished with square ends suitable for welding sleeves. The ends shall be prepared by grinding smooth the weld bead a total of 18" from the pipe ends.

All bidders shall fully comply with Con Edison Specification CE-PS-4303, "Quality Assurance Requirements for Level D Vendors."

Shipment of pipe by railroad transportation shall be in accordance with API specification RP 5L1 entitled "Recommended Practice for Railroad Transportation of Line Pipe." When transporting by truck or trailer, the pipe shall rest on pads and use adequate means to protect the pipe ends and maintain pipe roundness.

D. Method of Measurement

The quantities of straight steel pipes to be measured for payment shall be the number of linear feet of each size straight steel pipe actually furnished, delivered and laid, complete, as required by Con Edison and as measured along the center line axis of the pipe as installed.

The pipe shall be furnished in continuous lengths as ordered. Two or more shorter lengths of pipe joined together by welding or other means to meet length requirements are not acceptable.

E. Price to Cover

The contract price for furnishing, delivering and installing straight steel pipe steam casing around existing steam mains/services with outermost pipe encased in controlled low strength material shall be the unit price bid per linear foot for each size and shall cover the cost of all labor, materials (made in the United States of America, only), plant, equipment, samples, tests and insurance required and necessary to furnish, deliver and install straight steel steam casing pipe as specified; pumping; bridging; cleaning; welding; jointing; lining; coating; connections; backfilling; fabrication; inspection and testing; preparation, submittal and approval of all required shop drawings and designs; obtaining all necessary permits; furnish and install all other items necessary to complete this work; and do all other work necessary and incidental thereto in order to complete this work all in accordance with the plans and specifications and as directed by the Engineer.

Price to cover earth excavation outside the flood wall area shall be covered under JB 405.

Payment for furnishing, delivering and installing straight steel casing pipe will be measured in linear feet (L.F.):

JB 622.36	FURNISHING, DELIVERING AND INSTALLING 36-INCH STRAIGHT STEEL STEAM CASING PIPE
JB 622.48	FURNISHING, DELIVERING AND INSTALLING 48-INCH STRAIGHT STEEL STEAM CASING PIPE

F. References

1. S-9035-12
2. S-9035-13
3. S-9037-7
4. CE-PS-4303
5. JB 405
6. ESCR-7.18

CIVIL/MECHANICAL ENGINEERING

Steam Distribution Engineering
Consolidated Edison Company of New York, Inc.
4 Irving Place, New York, N.Y. 10003

Specification S-9035- 12

STEEL PIPE FOR STEAM MAINS AND SERVICES FOR THE 200 PSIG DISTRIBUTION SYSTEM

Prepared by: PSharma
Pankaj Sharma
Engineer
Date: 04/21/2016

Approved by:
Dowlatram Somrah
Section Manager
Date: 4-21-2016

Specification S-9035- 12

1.0 SCOPE

This specification applies to the purchase of steel pipe for use as 200 PSIG steam distribution mains and services.

2.0 MATERIAL

2.1 Pipe with nominal diameters from 1" to 24" inclusive shall conform to ASTM A-53 (entitled "Standard Specification for Pipe, Steel, Black and Hot-Dipped, Zinc-Coated, Welded and Seamless"), Grade B Type S (Seamless).

2.2 Pipe with nominal diameters from 30" and up shall conform to ASTM A-672 (entitled" Standard Specification for Electric-Fusion-Welded Steel Pipe for High-Pressure Service at Moderate Temperatures"), Grade B-65 Class 22 or Grade C-65 Class 22.

3.0 SUITABLE SUBSTITUTION

ASTM A-106 (entitled "Standard Specification for Seamless Carbon Steel Pipe for High-Temperature Service"), Grade B Seamless and API-5L (entitled "Specification for Line Pipe"), Grade B Seamless are suitable substitutes for pipe sizes 1" to 24" inclusive.

4.0 LENGTH

4.1 The pipe shall be furnished in one continuous length as specified on the order.

4.2 Two or more shorter lengths of pipe joined together by welding or other means to meet length requirements are not acceptable.

5.0 PIPE ENDS

The pipe shall be beveled for welding in accordance with requirements of API- 1104 entitled "Welding of Pipelines and Related Facilities".

6.0 INTERIOR OF PIPE

The interior of pipe shall be smooth, free of scale, oil, grease and other projections.

7.0 COATING

Pipe shall be supplied with the regular mill coating on the outside.

Specification S-9035- 12

8.0 DESIGN LIMITATIONS

The following sizes are approved for steam piping operating up to 200 PSIG and 650° F

Nominal Pipe Size (in.)	Outside Diameter (in.)	WT. Class/ Schedule	Wall Thickness (in.)	Weight (lbs/ft)
1	1.315	XS/80	0.179	2.17
2	2.375	XS/80	0.218	5.02
3	3.500	STD/40	0.216	7.58
4	4.500	STD/40	0.237	10.79
6	6.625	STD/40	0.280	18.97
8	8.626	STD/40	0.322	28.55
10	10.750	STD/40	0.365	40.48
12	12.750	STD	0.375	49.56
16	16.000	STD/30	0.375	62.58
20	20.000	STD/20	0.375	78.60
24	24.000	STD/20	0.375	94.60
30	30.000	STD	0.375	118.70
32	32.000	STD	0.375	126.66
34	34.000	STD	0.375	134.67
36	36.000	STD	0.375	142.68

9.0 TRANSPORTATION OF PIPE

9.1 Shipment of pipe by railroad transportation shall be in accordance with API Specification RP 5L1 entitled "Recommended Practice for Railroad Transportation of Line Pipe.

9.2 When transporting pipe by truck or trailer, the pipe supplier shall use adequate means to protect the pipe ends and maintain pipe roundness.

10.0 QUALITY ASSURANCE

All bidders shall fully comply with Consolidated Edison Specification CE-PS-4303, "Quality Assurance Requirements for Level D Vendors"

Specification S-9035- 12

11.0 INSPECTION

11.1 The requirements for inspection and acceptance, as described in the detailed specification for material referenced above, shall in all cases prevail. The Company may elect to arrange for inspection at the mill.

11.2 Seamed welds shall be 100% radiographically inspected per ASTM A 672.

11.3 Hydrostatic test shall conform in accordance with specifications for material referenced above.

REVISION 9
Included 32", 34" and 36" nominal sizes and, Section 10.2

REVISION 10
Reviewed and re-format.

REVISION 11
Added Specification titles, added section 10 (QA).

REVISION 12
Reviewed, added sections 10.0 and 11.3.

Next Scheduled Review March, 2021

CIVIL/MECHANICAL ENGINEERING

conEdison

Steam Distribution Engineering
Consolidated Edison Company of New York, Inc.
4 Irving Place, New York, N.Y. 10003

Specification S-9036-13

STEEL PIPE FOR STEAM MAINS AND SERVICES FOR THE 400 PSIG DISTRIBUTION SYSTEM

Prepared by: PSharma
Pankaj Sharma
Engineer

Date: 04/21/2016

Approved by:
Dowlatram Somrah
Section Manager

Date: 4-21-2016

Specification S-9036-13

1.0 SCOPE

This specification applies to the purchase of steel pipe for use as 400 PSIG steam distribution mains and services.

2.0 MATERIAL

2.1 Pipe with nominal diameters from 1" to 24" inclusive shall conform to ASTM A-53 (entitled "Standard Specification for Pipe, Steel, Black and Hot-Dipped, Zinc-Coated, Welded and Seamless"), Grade B Type S (Seamless).

2.2 Pipe with nominal diameters from 30" and up shall conform to ASTM A-672 (entitled" Standard Specification for Electric-Fusion-Welded Steel Pipe for High-Pressure Service at Moderate Temperatures"), Grade B-65 Class 22 or Grade C-65 Class 22.

3.0 SUITABLE SUBSTITUTION

ASTM A-106 (entitled "Standard Specification for Seamless Carbon Steel Pipe for High-Temperature Service"), Grade B Seamless and API-5L (entitled "Specification for Line Pipe"), Grade B Seamless are suitable substitutes for pipe sizes 1" to 24" inclusive.

4.0 LENGTH

4.1 The pipe shall be furnished in one continuous length as specified on the order.

4.2 Two or more shorter lengths of pipe joined together by welding or other means to meet length requirements are not acceptable.

5.0 PIPE ENDS

The pipe shall be beveled for welding in accordance with requirements of API- 1104 entitled "Welding of Pipelines and Related Facilities".

6.0 INTERIOR OF PIPE

The interior of pipe shall be smooth, free of scale, oil, grease and other projections.

7.0 COATING

Pipe shall be supplied with the regular mill coating on the outside.

Specification S-9036-13

8.0 DESIGN LIMITATIONS

The following sizes are approved for steam piping operating up to 400 PSIG and 650° F

Nominal Pipe Size (in.)	Outside Diameter (in.)	WT. Class/ Schedule	Wall Thickness (in.)	Weight (lbs/ft)
1	1.315	XS/80	0.179	2.17
2	2.375	XS/80	0.218	5.02
3	3.500	STD/40	0.216	7.58
4	4.500	STD/40	0.237	10.79
6	6.625	STD/40	0.280	18.97
8	8.626	STD/40	0.322	28.55
10	10.750	STD/40	0.365	40.48
12	12.750	STD	0.375	49.56
16	16.000	STD/30	0.375	62.58
20	20.000	STD/20	0.375	78.60
24	24.000	XS	0.500	125.49
30	30.000	XS/20	0.500	157.50
32	32.000	XS/20	0.500	168.21
34	34.000	30	0.625	222.78
36	36.000	30	0.625	236.13

9.0 TRANSPORTATION OF PIPE

9.1 Shipment of pipe by railroad transportation shall be in accordance with API Specification RP 5L1 entitled "Recommended Practice for Railroad Transportation of Line Pipe.

9.2 When transporting pipe by truck or trailer, the pipe supplier shall use adequate means to protect the pipe ends and maintain pipe roundness.

10.0 QUALITY ASSURANCE

All bidders shall fully comply with Consolidated Edison Specification CE-PS-4303, "Quality Assurance Requirements for Level D Vendors"

□

Specification S-9036-13

11.0 INSPECTION

11.1 The requirements for inspection and acceptance, as described in the detailed specification for material referenced above, shall in all cases prevail. The Company may elect to arrange for inspection at the mill.

11.2 Seamed welds shall be 100% radiographically inspected per ASTM A 672.

11.3 Hydrostatic test shall conform in accordance with specifications for material referenced above.

REVISION 10
Added 32", 34" and 36" nominal sizes and, Section 10.2

REVISION 11
Reviewed and re-format.

REVISION 12
Added Specification titles, added section 10 (QA).

REVISION 13
Reviewed, added section 11.3.

Next Scheduled Review March, 2021

CIVIL/MECHANICAL ENGINEERING

Steam Distribution Engineering
Consolidated Edison Company of New York, Inc.
4 Irving Place, New York, N.Y. 10003

Specification S-9037-7

CASING PIPE FOR USE ON STEAM MAINS AND SERVICE PIPING

Prepared by: P Sharma Date: 6/24/2016
Pankaj Sharma
Engineer

Approved by: Date: 6-24-2016
Dowlatram Somrah
Section Manager

Specification S-9037-7

1.0 SCOPE

This specification applies to the purchase of steel pipe for use as casing pipe for mains and services on the steam distribution system.

2.0 MATERIAL

2.1 Pipe shall be spiral butt weld conduit conforming to ASTM A-139 entitled "Standard Specification for Electric-Fusion (Arc)-Welded Steel Pipe (NPS 4 and Over)".

2.2 For pipe sleeves attached to dresser couplings at building walls, use ASTM A-53 entitled "Standard Specification for Pipe, Steel, Black and Hot-Dipped, Zinc-Coated, Welded and Seamless", conforming to Con Edison Specification S-9035-12.

3.0 SUITABLE SUBSTITUTIONS

Pipe conforming to ASTM A-252 entitled "Standard Specification for Welded and Seamless Steel Pipe Piles" is a suitable substitution.

4.0 SIZES

Nominal Pipe Size (in.)	Outside Diameter (in.)	Wall Thickness (in.)	Weight (lbs/ft)
8	8.675	0.135	12.16
10	10.75	0.135	15.21
12	12.75	0.135	18.07
16	16.00	0.135	22.73
18	18.00	0.135	25.73
20	20.00	0.187	39.61
24	24.00	0.187	47.60
28	28.00	0.187	55.60
30	30.00	0.250	79.51
32	32.00	0.250	84.80
36	36.00	0.250	95.50
40	40.00	0.375	158.85
42	42.00	0.375	166.90

5.0 INTERIOR OF PIPE

The interior of pipe shall be smooth, free of scale, oil, grease and other projections.

6.0 PIPE ENDS

Steam casing pipe shall be furnished with square ends suitable for welding sleeves. The ends shall be prepared by grinding smooth the weld bead a total of 18" from the pipe ends.

7.0 LENGTH

7.1 The pipe shall be furnished in continuous lengths as ordered.

7.2 Two or more shorter lengths of pipe joined together by welding or other means to meet length requirements are not acceptable.

Specification S-9037-7

8.0 QUALITY ASSURANCE

All bidders shall fully comply with Consolidated Edison Specification CE-PS-4303, "Quality Assurance Requirements for Level D Vendors"

9.0 INSPECTION

The requirements for inspection and acceptance, as described in the detailed specification for material referenced above shall in all cases prevail. The Company may elect to arrange for inspection at the mill.

10.0 TRANSPORTATION OF PIPE

10.1 Shipment of pipe by railroad transportation shall be in accordance with API Specification RP 5L1 entitled "Recommended Practice for Railroad Transportation of Line Pipe."

10.2 When transporting by truck or trailer, the pipe shall rest on pads and use adequate means to protect the pipe ends and maintain pipe roundness.

REVISION 4
General review.

REVISION 5
Added section 2.1, Reviewed and re-format.

REVISION 6
Added specification titles, deleted ASTM A211 (no longer published), added section 8 (QA).

REVISION 7
Added section 7.2, Reviewed and re-format.

Next Scheduled Review June, 2021

□

CONSOLIDATED EDISON COMPANY OF NEW YORK, INC.
4 IRVING PLACE
NEW YORK, NEW YORK 10003

ENGINEERING SPECIFICATION

CE-PS-4303

QUALITY ASSURANCE REQUIREMENTS FOR LEVEL D VENDORS

REVISION 02

JUNE, 2016

Prepared By:	**Timothy Cotter**	**6/28/2016**
	Safety and Quality Engineering/Date	
Verified By:	**Savita Shetty**	**6/29/2016**
	Safety and Quality Engineering/Date	
Approved By:	**Joe Werner**	**6/29/2016**
	Safety and Quality Engineering / Date	
Effective Date:	**7/01/2016**	

Paper copies of the Engineering Operations Manual are uncontrolled and therefore may be outdated. Please verify that you have the current version prior to use by viewing the Central Engineering website (http://ceng/)

□

TABLE OF CONTENTS

SECTION I - GENERAL REQUIREMENTS

SECTION	SUBJECT	PAGE
1.0	Purpose	3
2.0	Project Description	3
3.0	Applicable Standards and References	3
4.0	Quantity & Rating	4
5.0	Contracts, Drawings, Supplemental Specifications, and Material Lists	4
6.0	Submittals	4
7.0	Quality Assurance	5
8.0	Proposals	6
9.0	Schedule	6
10.0	Guarantees	6
11.0	Training and Demonstration	6
12.0	Owners Acceptance	6

SECTION II - TECHNICAL REQUIREMENTS

1.0	Technical Requirements	8
2.0	Performance Requirements	8
3.0	Support Systems	8
4.0	Required Submittals	8
5.0	Delivery, Storage, and Handling	8
6.0	Tests & Inspections	9
7.0	Repair & Restoration	10

SECTION III - DESIGN REQUIREMENTS AND SUPPLEMENTAL SPECIFICATIONS

1.0	Codes and Standards Table	11

Paper copies of the Engineering Operations Manual are uncontrolled and therefore may be outdated. Please verify that you have the current version prior to use by viewing the Central Engineering website (http://ceng/)

□

SECTION I – GENERAL REQUIREMENTS

1.0 PURPOSE

1.1 To set forth general requirements for vendors in establishing and maintaining the quality assurance effort required when the product or service being supplied is one of the vendor's standard products, but is simple enough in design that testing and/or inspection is adequate to ensure the required quality. (Level D Purchase).

1.2 This is not intended to specify those unique requirements associated to a particular type of equipment or service. Those requirements should be included in the detailed project or equipment specification.

1.3 This specification supersedes General Specification No. QA-7100D – QA Requirements for Sellers.

2.0 PROJECT DESCRIPTION

2.1 This specification is for projects that require Level D Quality Controls. This level of quality control is used when the product or service being supplied requires no significant design work and is similar to equipment previously supplied by the vendor. For Level D, only inspection and test controls are required.

2.2 This specification when referenced in an invitation, equipment specification, or contract shall apply to suppliers, equipment, sub-systems, systems and parts thereof as covered by those documents.

2.3 First Article is defined as the production unit or lot defined by Con Edison which is to be used to demonstrate the fulfillment of Con Edison's contract requirements with respect to fabrication and assembly techniques, inspection acceptance procedures and records, and specified configurations and functions.

3.0 APPLICABLE STANDARDS AND REFERENCES

3.1 Since this specification is generic in nature, a wide variety of codes and standards could apply to the product being provided. The Con Edison Responsible Person can specify these requirements as part of the detailed specifications or by providing an "X" in the applicability column in Part 0 of Section III of this document.

3.2 The National Electrical Safety Code (NESC) is applicable to all equipment/installations provided to Con Edison, and this line in Section III is always marked as applicable. The other codes and standards in Section III are meant to be a representative sample of potentially applicable codes, but the list is not meant to be all-inclusive. Other codes or standards may be added to Section III or provided as part of the project specific specification.

3.3 In addition to the above codes and standards, the Contractor/Seller shall comply with the Federal, State, and Local codes and regulations and all applicable specifications and standards including, but not limited to those specified in this document.

Paper copies of the Engineering Operations Manual are uncontrolled and therefore may be outdated. Please verify that you have the current version prior to use by viewing the Central Engineering website (http://ceng/)

□

4.0 QUANTITY AND RATING

4.1 The quantity and rating of the equipment/service being purchased is provided by the specific project specifications.

5.0 CONTRACT DRAWINGS, SUPPLEMENTAL SPECIFICATIONS, AND MATERIAL LISTS

5.1 This specification is a supplement to other specific purchasing specifications. Contract drawings and material lists are defined in the specific project specifications.

6.0 SUBMITTALS

6.1 The vendor shall prepare and submit for approval a written proposal that demonstrates the vendor's capability of meeting all the requirements of this procedure.

6.2 The submittal of proprietary information is not required as part of the Quality Assurance System. However, such information shall be available for review by Con Edison representatives at the vendor's facility.

6.3 The vendor submittal shall include an outline of the inspection plan that will be used during the manufacture and acceptance of the purchased equipment or supplies. For inspection plan elements not in effect at the time of the submittal the vendor shall provide a schedule of implementation for such elements.

6.4 The Inspection Plan should include:

6.4.1 A listing of the products that will be inspected under the Inspection Plan.

6.4.2 A listing of critical characteristics for the product involved.

6.4.3 A listing of in-process and end product inspections that is to be performed to verify critical characteristics acceptance. This list should include inspection techniques and equipment to be used and acceptance criteria for each inspection and test.

6.4.4 Define those records of inspection and tests that will be retained together with the retention period for these records.

6.4.5 Define the control systems that will be used to control identification and inspection status throughout manufacturing and inspection operations.

6.4.6 Define the system to control and calibrate inspection, measuring and test equipment.

6.4.7 Include a statement defining the extent of sampling inspections to be used together with appropriate sampling plans.

6.4.8 The vendor shall define the extent of final product inspection and test.

6.5 Copies of procedures, plans, instructions and inspections necessary to assure conformance with contract requirements need not be submitted, but these documents shall be available for review by Con Edison representatives at the vendor's facility.

Paper copies of the Engineering Operations Manual are uncontrolled and therefore may be outdated. Please verify that you have the current version prior to use by viewing the Central Engineering website (http://ceng/)

6.6 The vendor shall submit an overview of the inspection organization including qualifications and experience of key personnel.

6.7 The vendor shall submit a listing of the inspection facilities and equipment available for use in meeting the quality requirements.

6.8 If an organization has been previously qualified under this specification or its predecessor the vendor does not need to resubmit all the information previously resubmitted, but must submit certification that the previously submitted information is still current. Any changes should be identified and fully explained.

7.0 QUALITY ASSURANCE

7.1 Con Edison may conduct audits or assessments to assure compliance with the contract requirements. The vendor shall cooperate with Con Edison and its authorized representatives in the conduct of these activities.

7.2 The vendor shall make available to the audit team at the vendor's facility a copy of each specification, instruction, procedure, record, or special requirement deemed by the team to be necessary and pertinent to conduct such quality audits.

7.3 The vendor shall periodically verify the effectiveness and scope of their inspection plan.

7.4 When significant quality problems exist with a sub-tier supplier, the vendor at Con Edison's request shall obtain permission for Con Edison or its authorized representative to inspect source supplies or services at the supplier's facility. Such inspections shall not constitute acceptance nor shall it in any way replace the vendor's responsibility to furnish an acceptable end product.

7.5 The vendor shall define those records of tests and inspections, which will be maintained as verifiable objective evidence of conformance to contract requirements.

7.6 The vendor shall specify the retention period for records and when requested shall make these records available to Con Edison during the defined retention period.

7.7 The vendor shall implement and maintain an Inspection and Test System, which will assure product conformance to contract quality requirements.

7.8 The system shall provide an organized approach to assure the adequacy and completeness of all documents product inspections and tests, material conformances, and quality.

7.9 The vendor shall obtain approval of Con Edison for all changes to quality assurance plans, System summaries, procedures and quality criteria previously approved by Con Edison.

7.10 Con Edison's approval of vendor's quality assurance plans, systems, procedures and related documents and audits of vendor's compliance therewith shall not relieve the vendor of the responsibility for furnishing end products meeting all requirements of the contract.

Paper copies of the Engineering Operations Manual are uncontrolled and therefore may be outdated. Please verify that you have the current version prior to use by viewing the Central Engineering website (http://ceng/)

8.0 PROPOSALS

8.1 Any nonconformance or deviation from this specification shall be identified by the vendor in writing and approved by Con Edison.

9.0 SCHEDULE

9.1 As defined in the equipment/service specific specification.

10.0 GUARANTEES

10.1 As defined in the equipment/service specific specification.

11.0 TRAINING AND DEMONSTRATION

11.1 As defined in the equipment/service specific specification.

12.0 OWNER ACCEPTANCE

12.1 Acceptability is defined in the equipment/service specific specification.

12.2 The vendor shall provide for the identification, segregation, and disposition of items that do not conform to either the vendor's or Con Edison's documented requirements.

12.3 The vendor shall document each instance of accepted nonconformance.

12.4 Acceptance of non-conforming items may be established as follows:

12.4.1 When an item does not conform to Con Edison requirements, the vendor may deliver the item, if Con Edison agrees in writing to accept the non-conforming item without repair, or authorizes repair that will make the non-conforming article acceptable to Con Edison.

12.4.2 When an item does not conform to vendor requirements, the vendor may establish acceptability of the item provided that such action does not affect the vendor's warranty obligations and that compliance with codes and requirements of regulatory bodies, having jurisdiction, is assured.

12.4.3 When an item does not conform to a drawing, specification, or procedure previously approved by Con Edison, the vendor's acceptance decision shall be submitted to Con Edison.

12.4.4 Any changes that affect contract price shall be administered in accordance with the change provisions of the contract terms and conditions.

12.5 When required by the purchase order, the vendor shall schedule a First Article Inspection for Con Edison at the vendor's facility upon completion of the "first article" as defined by Con Edison.

12.6 When required by the purchase order, the vendor shall schedule a comparable inspection at production points or for specified articles as agreed to by Con Edison and the vendor, following major retooling or design changes or subsequent to evident quality degradation.

Paper copies of the Engineering Operations Manual are uncontrolled and therefore may be outdated. Please verify that you have the current version prior to use by viewing the Central Engineering website (http://ceng/)

12.7 For a First Article Inspection, the vendor shall present the "first article" for Con Edison's examination, and present or demonstrate the following as a minimum.

12.7.1 Drawings, specifications, and other documentation used in the manufacturing, inspecting and testing of the "first article."

12.7.2 Objective evidence of inspection acceptance of tooling and test equipment used to produce the "first article."

12.7.3 Objective evidence of the vendor's inspection and acceptance of the "first article."

12.7.4 Other documentation, data, demonstrations or evidence of conformance of the "first article" to the requirements of the contract.

Paper copies of the Engineering Operations Manual are uncontrolled and therefore may be outdated. Please verify that you have the current version prior to use by viewing the Central Engineering website (http://ceng/)

SECTION II – TECHNICAL REQUIREMENTS

1.0 TECHNICAL REQUIREMENTS

1.1 To the extent possible, the vendor shall select parts, materials, and processes on the basis of proven experience or qualification for the intended use.

1.2 The elements of the process that require controls necessary should be specified in process control procedures or similar documents.

2.0 PERFORMANCE REQUIREMENTS

2.1 The vendor shall maintain an inspection system during manufacturing that will assure that contract requirements are met by adherence to this system and by end product inspection results.

2.2 The vendor shall maintain records of inspections and tests performed throughout the manufacturing cycle.

3.0 SUPPORT SYSTEMS

3.1 The vendor shall define those inspection operations that require special training and/or certification of personnel.

3.2 Prior to performing these operations the vendor shall train and/or certify as competent those personnel who will perform these functions during the operations.

3.3 Manufacturing tools, gauges, jigs, and fixtures used for the measurements of quality characteristics shall be checked for accuracy prior to initial use, and shall be re-examined at established intervals to the extent necessary to assure continued adequate accuracy. Accuracy may be established by inspection of articles produced.

4.0 REQUIRED SUBMITTALS

4.1 The vendor shall respond promptly to Con Edison's request for reports describing action taken to correct deficiencies found in items submitted to Con Edison and to preclude recurrence of these deficiencies in subsequent submittals.

5.0 DELIVERY, STORAGE, AND HANDLING

5.1 The vendor shall maintain a system to control packaging and shipping operations to assure the following:

5.1.1 The articles are as contracted by Con Edison, are complete and properly identified.

5.1.2 Packaging, preservation and markings are as required by the contract.

5.1.3 An adequate pre-shipment inspection is conducted to assure that no damage occurs during shipping.

Paper copies of the Engineering Operations Manual are uncontrolled and therefore may be outdated. Please verify that you have the current version prior to use by viewing the Central Engineering website (http://ceng/)

□

□□□□□□□□□□0□□

□□□□□□□□□□□□□□□□0□0□

□□□□□□

5.2 The vendor shall maintain facilities and procedures to the extent necessary to:

5.2.1 Control identification of articles or lots throughout all phases of manufacture and inspection.

5.2.2 Ensure that housekeeping and handling practices prevent damage, loss substitution or quality degradation.

5.3 Equipment and manufacturing devices used for inspection purposes shall be stored in a manner, which will preclude damage and loss of accuracy.

6.0 TESTS AND INSPECTIONS

6.1 The vendor shall employ and maintain inspection, measuring and test equipment of suitable range, accuracy and type to assure conformance of equipment to contract requirements.

6.2 Un-calibrated and damaged measuring, inspection, and test equipment shall be controlled and identified to preclude use.

6.3 Each unit of inspection, measuring and test equipment shall be calibrated prior to initial use and at established intervals against adequate standards.

6.4 Calibration information shall be noted on the instrument or in correlated records.

6.5 Inspection, measuring and test equipment shall be modified as necessary to assure compatibility with engineering changes to equipment to be delivered under the contract.

6.6 Reference standards used for calibration of inspection, measuring and test equipment shall be periodically recalibrated to maintain traceability to international or national standards.

6.7 The vendor may use sampling inspection procedures when tests are destructive or when quality history, inherent characteristics or the non-critical application of the material justify less than 100% inspection. Such sampling plans shall be included as part of the vendor's Quality System.

6.8 The vendor shall maintain a system for identifying the inspection status of articles or lots during receipt inspection of supplies and materials and during manufacture, assembly and test of equipment.

6.9 The vendor shall maintain procedures for rework and re-inspection of items, which can be completed to drawing or specification requirements after an inspection rejection.

6.10 The vendor shall define the extent of standard final product inspection and test.

6.11 Prior to the submittal to Con Edison for acceptance, the vendor shall perform a final inspection in accordance with the requirements of the equipment or service specification, and the Inspection Plan.

Paper copies of the Engineering Operations Manual are uncontrolled and therefore may be outdated. Please verify that you have the current version prior to use by viewing the Central Engineering website (http://ceng/)

7.0 REPAIR AND RESTORATION

7.1 The vendor shall detect and promptly correct conditions, which have resulted or could result in the production of non-conforming articles.

□

SECTION III – DESIGN REQUIREMENTS AND SUPPLEMENTAL SPECIFICATIONS

PART 0 – CODES AND STANDARDS

1.0 The following Codes and Standards (edition in force at the time of Contract signing), checked below, shall, as appropriate, apply to the design, fabrication (including metallurgy, dimensions, tolerances), and testing of the equipment specified herein. If there is a conflict between this Specification, the equipment detailed specification, or a referenced document, the matter shall be referred to the purchaser for resolution.

	Code or Standard	Applicable
1.0	**American Bearing Manufacturers Association (ABMA)**	
1.1	ABMA-9 Load Ratings and Fatigue Life for Ball Bearings	
1.2	ABMA-9 Load Ratings and Fatigue Life for Roller Bearings	
2.0	**The American Society of Mechanical Engineers (ASME)**	
2.1	B&PV Code Section I – Power Boilers	
2.2	B&PV Code Section II – Material Specification	
2.3	B&PV Code Section V – Non-Destructive Examination	
2.4	B&PV Code Section IX – Welding & Brazing Qualification	
2.5	B31.1 Power Piping	
3.0	**American Welding Society (AWS)**	
3.1	AWS A2.4 Standard Symbols for Welding, Brazing and NDE	
3.2	AWS D1.1 Structural Welding Code – Steel	
4.0	**Building Officials and Code Administrators International, Inc. (BOCA)**	
4.1	Basic Building and Mechanical Codes	
5.0	**City of New York Building Code**	
6.0	**Institute of Electrical and Electronics Engineers (IEEE)**	
6.1	IEEE C2 – National Electrical Safety Code	**X**
6.2	IEEE C37 – Requirements, Terminology, and Test Code for Instrument Transformers	
6.3	IEEE C57.13.1 - Guide for Testing of Relaying Current Transformers	

Paper copies of the Engineering Operations Manual are uncontrolled and therefore may be outdated. Please verify that you have the current version prior to use by viewing the Central Engineering website (http://ceng/)

□

	Code or Standard	Applicable
6.4	IEEE C37.20 – Switchgear Assemblies, Including Metal Enclosed Bus	
6.5	IEEE C37.90 – Standard for Relays and Relay Systems Associated with Electrical Power Apparatus	
6.6	IEEE 43 – Recommended Practice for Testing Insulation Resistance of Rotating Machinery	
6.7	IEEE C50.10 – General Requirements for Synchronous Machines	
6.8	IEEE 80 – Guide for Safety in Substation Grounding	
6.9	IEEE 112 – Standard Test Procedure for Polyphase Induction Motors and Generators	
6.10	IEEE 115 – IEEE 115 Test Procedure for Synchronous Machines	
6.11	IEEE 242 – Protection and Construction of Industrial and Commercial Power Systems	
6.12	IEEE 446 – Recommended Practice for Emergency and Standby Power Systems for Industrial and Commercial Applications	
6.13	IEEE 519 - Recommended Practice and Requirements for Harmonic Control in Electrical Power Systems	
6.14	IEEE 1050 – Guide for Instrumentation and Control Equipment Grounding in Generating Stations	
6.15	IEEE Std. 1187 – IEEE Recommended Practice for Installation Design and Installation of Valve-Regulated Lead Acid Storage Batteries for Stationary Applications	
7.0	**Insulated Cable Engineers Association (ICEA)**	
7.1	S-66-524 - Cross-Linked Thermosetting Polyethylene Insulated Wire and Cable for Transmission and Distribution of Electrical Entergy	
8.0	**National Electrical Manufacturers Association (NEMA)**	
8.1	NEMA ICS-2 Industrial Control and System Controllers, Contractors, and Overload Relays Rated 600 Volts	
8.2	NEMA ICS-6 Industrial Control and Systems Enclosures	
8.3	NEMA CC1 –Electrical Power Connectors for Substations	
8.4	NEMA MG1 Motors and Generators	
8.5	NEMA MG2 Safety Standard for Construction and Guide for Selection, Installation and Use of Electric Motors	

	Code or Standard	Applicable
8.6	NEMA PB 1.1 General Instructions for Proper Installation, Operation, Maintenance of Panel-Boards Rated 600v or Less	
8.7	NEMA SG 5 – Power Switchgear Assemblies	
9.0	**National Fire Protection Association (NFPA)**	
9.1	NFPA 30 – Flammable and Combustible Liquids Code	
9.2	NFPA 70 – National Electrical Code	
9.3	NFPA 110 – Emergency and Standby Power System	
10.0	**Underwriters Laboratories, Inc. (UL)**	
10.1	UL508A – Industrial Control Panels	
11	**NYS Public Service Commission Code, 16 NYCRR Part 255**	
12	**Other**	

JB 625 - INSTALLATION OF STEAM EQUIPMENT

A. Description:

Under this section, the City Contractor shall provide all labor, materials, equipment, insurance and incidentals required to install steam equipment, concrete housing with waterproofing membrane and ancillary piping systems to existing or new Con Edison Company facilities. The Contractor shall satisfactorily install and hydrostatically test steam equipment as required in accordance with the specifications and directions of Con Edison Steam Engineering in consultation with the Con Edison field representative. All work shall be performed in accordance with Con Edison Requirements, standard drawings and specifications referenced herein. The steam equipment to be installed shall include but not be limited to:

1. Cooling Chamber Assembly
2. Trap Assembly
3. Drain Assembly
4. Valve Assembly
5. Anchor
6. Manhole
7. Service Valve box
8. Sewer connection

B. Material:

All materials will be provided by Con Edison unless specifically noted otherwise. All materials provided by Con Edison will be delivered to the Contractor at the construction site and unloaded by the Contractor. Materials supplied by the contractor and utilized in the construction of the steam cooling chamber shall be in accordance with Con Edison standard specifications and applicable Engineering Orders.

C. Method of Construction:

The Contractor shall install the steam assembly equipment and concrete housing, (including but not limited to bolts, water seals, tees, flanges, gaskets, trap valves, blow-off valves, sleeves, reducers, caps, and plates). All work shall comply with the specifications, plans, layouts, and standards of the facility operator. All work shall be performed in accordance with Con Edison standard specifications and applicable Engineering Orders. No traffic shall be allowed on modified structures until permitted by the facility operator. All welds must be performed in accordance with Specification S-11944 and radiographically inspected with Specification G-1070. The elevation and line of the steam main may be changed to field conditions, and prior to any changes in the field must be reported to Steam Distribution Engineering for approval. In addition, the existing insulation may contain asbestos, and it should be handled and disposed in accordance with Con Edison's Corporate Asbestos Management Manual. An ACP-7 permit will need to be filed for any abatement work. All identified work shall be performed by steam approved and qualified contractor.

D. Method of Measurement:

The quantity to be measured shall be for each (EA) steam assembly installed complete.

JB 625A – Installation of Steam Cooling Chamber Assembly
JB 625B – Installation of Steam Trap Assembly
JB 625C – Installation of Steam Drain assembly
JB 625D – Installation of Steam Valve Assembly
JB 625E – Installation of Steam Anchor
JB 625F – Installation of Steam Manhole
JB 625G – Installation of Steam Service Valve Box
JB 625H – Installation of Steam Sewer Connection

E. Price To Cover:

The unit price bid for each (EA) steam assembly item installed shall cover the cost of all labor, material, equipment, insurance, and incidentals necessary to completely install the steam assembly equipment and concrete housing with waterproofing membrane (including but not limited to bolts, water seals, tees, flanges, gaskets, trap valves, sleeves, blow-off valves, reducers, caps, and plates). The unit price shall cover the cost associated with the maintenance and protection of traffic and incidentals required to construct the steam assembly. All work shall comply with the plans, layouts, specifications, standards, and directions of the facility operator.

The installation of steam manholes and boxes shall be paid for separately under other appropriate contract bid item.

F. References:

1. **Specifications:**
   - S-11944: Shielded Metal Arc Welding of Steel Pipe and Fittings
   - S-9035: Steel Pipe for Steam Mains and Services for 200 psig Distribution System
   - EO-16498: Field Constructed Steam Service Valve Enclosures Type SV3-2
   - S-9057: Thermal Insulation for Field-Fabricated Pipe and Fittings on Underground Steam Mains and Services
   - EO-8935: Heat Deflecting Slab Installation Steam Mains
   - S-9040: Steel Socket or Butt Welded Fittings for Use in the 200 and 400 psig Steam Distribution Systems
   - EO-15389 Field Constructed Slab Anchors for 6"- 30" 200 & 400 psig Steam Mains
   - EO-17025 Concrete Slabs Over Steam Facilities Located in Roadway or Sidewalk
   - EO-7412: Cast Iron Saddle Box and Roller for 6"- 30" Steam Main
   - EO-15066: Sliding Support for 6"- 30" Steam Main in Concrete Housing
   - S-11924 Procedure for Removal of Housing and Asbestos Insulation from Buried Steam Main
   - EO-9367: Prefabricated Steam Mains 13' to 41' Length 6" to 30" Dia. 200 PSIG
   - S-12004: Procedures for installation waterproofing membranes for steam manhole and housing in the tidal area
   - EO-17155: Field construction of steam manholes with stainless steel rebar

EO-11065: Installation of steam condensate drain and cooling chamber
EO-17130: Condensate discharge connection to sewer
EO-17131: Direct connection to sewer (for sewer cover less than 13ft)
EO-17132: Riser connection to sewer
EO-6874-D: Cast iron guide for steam mains
EO-17055: Thrust guide on saddle box and roller for new and existing 6" – 30" steam mains
EO-6902: 10" Cooling chambers for steam mains
EO-13167: Concrete piers for supporting steam mains crossing sewers or water mains

□

JB 636E - ADJUSTMENT OF UTILITY HARDWARE

Under this section the Contractor shall adjust existing utility street hardware including vault grates, valve boxes, etc., to the proposed grade by either building up or lowering the installation and resetting the castings, as and where directed by the facility operator.

A. Description

Building up or lowering the installation and resetting the castings shall consist of removing the existing frame and cover, building up or decreasing the existing installation, replacing the frame and/or cover if damaged, as determined by the facility operator, with a new frame and/or cover furnished by the facility operator, and setting the frame and cover to the new elevation.

B. Materials

Materials used shall comply with the Standards and specifications of the facility operator having jurisdiction over the installations. Where high-early strength concrete is required by the Resident Engineer to be placed adjacent to utility installations then the requirement for mortar shall be quick setting mortar capable of obtaining a minimum compressive strength of 1,500 psi in two (2) hours, and the requirement for concrete shall be high-early strength complying with current N.Y. State Department of Transportation, Standard Specifications for Class F concrete.
When castings and/or covers are deemed inadequate at a location as determined by the facility operator, the facility operators shall furnish new castings and/or covers to the Contractor for installation. The Contractor is required to inform the utility operator in advance of the need for the castings. Materials supplied by the facility operator shall be delivered to the contractor’s designated storage area.

C. Methods of Construction

The Contractor shall breakout and dispose of sidewalk, curb, pavement and/or pavement base around existing casting, excavate as required to remove casting and install existing or replacement casting, remove casting, protect opening, reinstall existing casting or install new casting to the proposed grades, backfill, grade and compact fill around casting, install base concrete and or sidewalk pavement and curb, tack coat around frame, install and remove temporary pavement around casting where directed by the facility operator; and install and compact asphalt binder and wearing course or other permanent pavement around casting and perform all work in accordance with the contract plans and the specifications.

Setting or resetting the castings shall be done with bricks plus mortar and/or by raising or lowering adjustable castings according to the standards of the utility owner having jurisdiction over the installation. Work shall be done in a workmanlike manner. Any damage resulting from the Contractor's operations to the existing installation which is to remain shall be satisfactorily corrected at the Contractor's own expense, as directed by the facility operator. Castings, which are deemed unacceptable for resetting, shall become the property of the Contractor and shall be removed and disposed of by him away from the site.

No traffic shall be allowed on adjusted utility hardware until permitted by the facility operator.

D. Method of Measurement

The quantity to be measured for payment shall be the number of utility hardware units (EA) in each size group actually adjusted as specified under each item. The size of each utility hardware unit, measured in width, shall be defined as either, the diameter of the exposed edge of the casting, or the exposed edge of the longest side of rectangular frames as indicated in sketch JB 636.

For Castings in Roadway

□

JB 636 EA RD - Adjustment of Utility Hardware (Under 7" Width)
JB 636 EB RD - Adjustment of Utility Hardware (7" to under 14" Width)
JB 636 EC RD - Adjustment of Utility Hardware (14" to under 30" Width)
JB 636 ED RD - Adjustment of Utility Hardware (30" to under 34" Width)
JB 636 EE RD – Adjustment of Utility Hardware (34” to under 41” Width)
JB 636 EG RD - Adjustment of Utility Hardware (41" to under 75" Width)
JB 636 EH RD - Adjustment of Utility Hardware (75" to under 125" Width)
JB 636 EI RD - Adjustment of Utility Hardware (125" to under 170" Width)

For Castings in Sidewalk

JB 636 EA SW - Adjustment of Utility Hardware (Under 7" Width)
JB 636 EB SW - Adjustment of Utility Hardware (7" to under 14" Width)
JB 636 EC SW - Adjustment of Utility Hardware (14" to under 30" Width)
JB 636 ED SW - Adjustment of Utility Hardware (30" to under 34" Width)
JB 636 EE SW – Adjustment of Utility Hardware (34” to under 41” Width)
JB 636 EG SW - Adjustment of Utility Hardware (41" to under 75" Width)
JB 636 EH SW - Adjustment of Utility Hardware (75" to under 125" Width)
JB 636 EI SW - Adjustment of Utility Hardware (125" to under 170" Width)

E. Price to Cover

The price for re-grading utility hardware shall be the unit price per each (EA.) and shall cover the cost of furnishing all labor, materials, plant, equipment, and incidentals required to remove existing frames and covers; build up the existing installations with brick and mortar, or lower the existing installations by removing bricks and mortar; replace damaged frames and/or covers with frames and/or covers furnished by others; break out pavement and/or pavement base; protect existing opening and installation; set the frames and covers to new elevations; grade and compact fill; install base concrete; tack coat frame; install, remove, and dispose temporary pavement; install and compact asphalt binder and wearing course or other permanent pavement; repair minor structural damage to existing installations prior to resetting frames; unloading of furnished castings at the Contractor's yard and transporting castings from the Contractor's yard to the job site as required; and complete the work in accordance with the plans, the specifications, and the directions of the facility operator.

F. References

1. NYS DOT Standard Specs for Class F Concrete
2. Con Edison Specifications, latest revisions. EO-10321-B, latest revision – Chimneys, collars & grading blocks for manholes & vaults construction and installation
3. Sketch JB 636E

JB 636M – MODIFICATION OF WORK METHODS TO ACCOMMODATE UTILITY HARDWAREDURING PAVEMENT MILLING AND RESURFACING OPERATIONS

A. Description

Under this section, the Contractor shall provide all labor, materials, equipment, insurance, and incidentals required to maintain, protect, and accommodate the integrity of utility hardware during pavement milling and resurfacing operations. Hardware includes castings, frames, and covers on utility structures, valve box cover castings, concrete collars around steam castings, and all other hardware protecting utility facilities.

B. Materials – N/A

C. Method of Construction

Removal of existing pavement around utility hardware shall be performed by the Contractor with extreme caution by utilizing appropriate methods of operation, by employing specialized construction equipment, and by special operations and sequencing.

The Contractor shall not mill existing pavement within 12" of the perimeter of utility hardware. Removal of pavement within 12" of the perimeter of utility hardware shall be by cutting with pavement breakers or other methods as proposed by the Contractor. All methods shall be presented to the facility operator by the Contractor prior to the start of construction and shall be approved by the facility operator.

During removal of existing pavement and for the duration of project, the Contractor shall protect utility hardware from damage by the Contractor's operations and traffic. Contractor shall also provide all necessary protection to pedestrians to prevent injury to pedestrians when crossing utility hardware during the project. Utility street hardware damaged by the Contractor or others during the project shall be replaced by the Contractor at Contractor's expense.

The Contractor shall not place any paving materials over utility hardware during the project and shall maintain free and unobstructed access to all structures at all times. The Contractor shall maintain all covers free of debris and protect the covers, if necessary, from residue that results from the paving operation.

D. Method of Measurement

The quantity to be measured for payment shall be the number of utility hardware units (EA.) in each size group actually adjusted as specified under each item. The size of each utility hardware unit, measured in width, shall be defined as either, the diameter of the exposed edge of the casting, the exposed edge of elliptical castings measured along the major axis or the exposed edge of the longest side of rectangular frames as indicated in sketch JB 636E.

JB 636 MA – Modification of Work Methods to Accommodate Utility Hardware (Under 7" Width)

JB 636 MB – Modification of Work Methods to Accommodate Utility Hardware (7" to under 14" Width)

JB 636 MC – Modification of Work Methods to Accommodate Utility Hardware (14" to under 30" Width)

JB 636 MD – Modification of Work Methods to Accommodate Utility Hardware (30" to under 34" Width)

JB 636 ME – Modification of Work Methods to Accommodate Utility Hardware (34" to under 41" Width)

JB 636 MG – Modification of Work Methods to Accommodate Utility Hardware (41" to under 75" Width)

JB 636 MH – Modification of Work Methods to Accommodate Utility Hardware (75" to under 125" Width)

JB 636 MI – Modification of Work Methods to Accommodate Utility Hardware (125" to under 170" Width)

JB 636 SMB – Modification of Work Methods to Accommodate Utility Steam Hardware (Under and including 8" Width)

JB 636 SMC – Modification of Work Methods to Accommodate Utility Steam Hardware (Above 8" to 34" Width)

A. Price to Cover

The price to modify work methods to accommodate Utility Hardware during pavement milling and resurfacing operations shall include the cost of all incremental labor, materials, time, equipment, insurance and incidentals required for removal and disposal of existing pavement, installation and compaction of base and wearing course materials, installation and compaction and removal of temporary asphalt concrete mixture, tack coating; in accordance with the plans, the specifications and the directions of the facility operator. The price to cover shall further include the cost of maintaining, protecting, and accommodating the integrity of utility street hardware during the project and during the performance of milling and resurfacing and the incremental additional work and effort made necessary to protect pedestrians from injury when crossing utility hardware during the project. The price to cover shall further include additional areas of modification of work methods beyond 12" of the perimeter of the utility street hardware due to the milling equipment and the location of other utility hardware, city street hardware, utility poles, street lights, traffic signals, curbs, sidewalks, medians, guide rails, pavement stops, cobblestones, and pavers. The price to cover for Items JB 636 SMB and JB 636 SMC shall also include modification of work methods due to existing concrete collars surrounding these castings.

Payment for all work herein specified shall be made on a one-time basis only; no payment for work herein specified shall be made for the same area more than one time. Adjustment to utility hardware shall be paid for under the appropriate JB 636E item.

F. References

1. Sketch JB 636E
2. JB Item 636E

□

JB 636 RM - Rebuilding and Modifications to Utility Structures

A. Description

This section describes the work of performing the rebuilding of utility structures by rebuilding the existing structures using methods approved by the facility operator. This section also describes the work of performing modifications to utility structures to accommodate changes in roadway or sidewalk grades that cannot be accomplished by adjustment of frames and covers, as described by Section 636 E, in the judgment of the facility operator. The existing structures shall be modified using methods approved by the facility operator in consultation with the Resident Engineer.

Rebuilding and or modifications of utility structures, which include boxes, manholes, vaults and valve boxes; shall be as directed by the facility operator and for structures with a monolithic roof shall include:

• Removing the existing frame and cover, followed by
• Demolition of all or a portion of the walls, floor, and monolithic roof, followed by
• Rebuilding of all or a portion of the floor, followed by
• Rebuilding:
• A portion of the walls or
• A portion of the walls plus a vertical extension or
• All of the walls or
• All of the walls plus a vertical extension, followed by
• Rebuilding all or a portion of the monolithic roof or replacement with a non-monolithic roof.

Rebuilding and or modifications of utility structures, which include boxes, manholes, vaults and valve boxes; shall be as directed by the facility operator and for structures with a non-monolithic roof shall include:

• Removing the existing frame, cover, and roof slab, followed by
• Demolition of all or a portion of the walls and floor, followed by
• Rebuilding:
• A portion of the walls or
• A portion of the walls plus a vertical extension or
• All of the walls or
• All of the walls plus a vertical extension, followed by
• Installation of the existing roof slab or a new non-monolithic roof slab.

B. Materials

All materials used shall comply with the standards of the facility operator. The Contractor shall obtain pre-cast roofs that are available from a facility operator’s vendor from that vendor.

C. Method of Construction

All work shall comply with the specifications, plans, and standards of the facility operator. The Contractor shall perform the necessary rebuilding of the floor, walls, and roof of the existing utility structure as directed by the facility operator. New roof slabs shall be monolithic or nonmonolithic as directed by the facility operator. New non-monolithic roofs shall be removable and cast on site or pre-cast as directed by the facility operator. No traffic shall be allowed on modified structures until permitted by the facility operator.

The Contractor shall perform the necessary modifications to the walls and roof of the existing utility structure to accommodate changes in roadway or sidewalk grades that cannot be accomplished by the adjustment of frames and covers as directed by the facility operator. New roof slabs shall monolithic or non-monolithic as directed by the facility operator. New non-monolithic roofs shall be removable and cast on site or pre- cast as directed by the facility operator. No traffic shall be allowed on modified structures until permitted by the facility operator.

Adjusting existing or new frames and covers shall be as described in JB 636E.

All work shall be done in a workmanlike manner and any damage resulting from the Contractor's operations shall be satisfactorily corrected as directed by the facility operator and at the Contractor's expense.

D. Method of Measurement

The quantity to be measured for payment shall be the number of cubic yards (CY) of concrete, pre-cast concrete, brick, and mortar in place to the nearest hundredth of a cubic yard. No deductions will be made for the spaces occupied by steel reinforcement.

E. Price to Cover

The contract price bid under this item shall be a unit price per cubic yard (CY) of concrete, precast concrete, brick, and mortar placed in the utility structure. The unit price shall cover the cost of all labor, materials, plant, equipment, insurance and incidentals required to rebuild or modify privately owned utility structures, including all pavement breaking, pavement removal and disposal, excavation, haul away, and disposal, furnish and install and compact backfill, sheeting and bracing, removing of frames and covers. The price shall also include demolition of the private utility structure, haul away and disposal of demolished materials, formwork, installation of concrete, bricks, mortar, steel reinforcement, structural steel beams, furnish and install pre-cast roofs, removal and installation of interior hardware, support and protection of all utility facilities within the excavation and structure, and the furnishing of samples, as required. All work shall comply with the plans, specifications, standards, and directions of the facility operator. Resetting of new or existing street hardware shall be paid under JB 636E.

F. References

1. JB 636E

ROUND COVERS

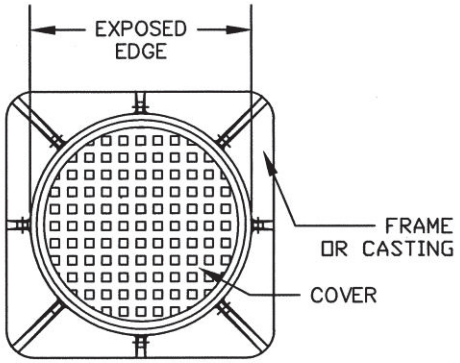

RECTANGULAR COVERS/FRAMES

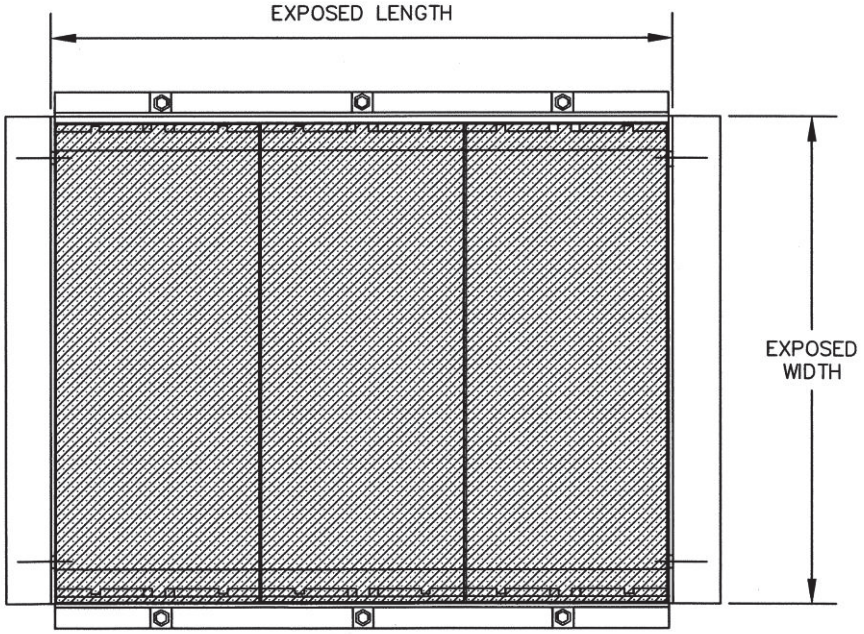

PLAN VIEW
N.T.S.

ADJUSTMENT OF
UTILITY HARDWARE

LAST REVISION	SKETCH NO.
6/30/2015	JB 636E

□

JB 638NT – FIELD CONSTRUCTED TELECOMMUNICATIONS MANHOLE STRUCTURES

Under this item the Contractor shall perform the complete installation of field constructed utility structures approved by the facility operator in consultation with the Resident Engineer. The utility structure shall be field constructed and installed in compliance with standard utility specifications and/or methods approved by the facility operator in consultation with the Resident Engineer.

A. Description

Installation of field constructed utility structure shall comply with utility standard specifications and/or as directed by the facility operator in consultation with the Resident Engineer and shall include:

- Service Boxes (various sizes)
- Manholes (various sizes)

Where approved by the facility operator, telephone structures may as an alternate be constructed of precast reinforced concrete.

B. Materials

The facility operator will furnish cable racks, pulling-in irons, sump castings, hardware, manhole steps/ladder supports and cast iron frames and covers. All other materials required for a complete manhole installation including concrete, reinforcing steel and structural steel shall be supplied by the Contractor and shall comply with the standards of the facility operator.

The Contractor shall notify the facility operator a minimum of 30 days prior to manhole construction for scheduling materials to be furnished by the utility company. The Contractor shall pick up said materials at the facility operator's yard.

All concrete shall have a minimum compressive strength of 4,000 psi at 28 days.

Reinforcing steel shall be deformed bars conforming to ASTM, Grade 60.

Structural steel shall conform to the requirements of ASTM A-36. Bolts shall conform with the requirements of ASTM A-325.

The Contractor shall supply all necessary materials (mortar, concrete, brick, etc.) for sealing duct entrance windows in manholes and for constructing chimneys and bricking up castings to grade.

C. Method of Construction

All work shall comply with the utility specifications, plans, and standards of the facility operator.

Refer to specification JB 406 for excavation and sheeting requirements associated with telephone manhole construction. Where replacement manholes are indicated on the plans, the demolition and removal of the existing manhole structure and the protection of existing cables and splices will be paid separately under JB 638R.

The Contractor shall perform the necessary field construction of the floor, walls, and roof of the utility structure as shown on the Plans and as directed by the facility operator in consultation with the Resident Engineer. No traffic shall be allowed on the structure until permitted by the facility operator in consultation with the Resident Engineer.

□

Field conditions may require the contractor to modify the design of the manhole structure, as directed by the facility operator in consultation with the Resident Engineer.

Refer to specification JB 636E for guidelines relating to the installation of new frames and covers. All structural steel roof beams shall be ground free of burrs and painted with one shop coat and two field coats of finish paint. The Contractor shall make provisions for and incorporate into the manhole all required materials as shown on the Plans, standard utility details or as directed by the facility operator in consultation with the Resident Engineer.

The Contractor shall provide duct entry windows in the new manhole as shown on the Plans and as directed by the facility operator. All windows shall be properly sealed around new ducts per utility company requirements.

All cable racks and wall brackets shall be supported on walls with ½" dia. X 2-½" long galvanized steel machine bolts using ½" concrete inserts or expansion bolts. Vertical spacing of inserts shall not exceed 18" o.c. (typ).

The Contractor shall confirm placement of concrete inserts for cable rack supports, pulling-in irons, and other embedments shown on the Plans with the facility operator, in consultation with the Resident Engineer, prior to manhole construction.

All work shall be done in a workmanlike manner and any damage resulting from the Contractor's operations shall be satisfactorily corrected as directed by the facility operator in consultation with the Resident Engineer and at the Contractor's expense. The contractor shall perform the installation of the utility structure while maintaining, supporting, and protecting and accommodating the integrity of all utility facilities (without disruption of service) located within the areas of the excavation and the field constructed structure.

This item shall also apply when partially or totally rebuilding or modifying an existing utility structure.

The Contractor is advised that in lieu of poured-in-place structures the substitution of Precast Reinforced Concrete Structures that comply with Utility Specifications, will be permitted only when approved by the facility operator in consultation with the Resident Engineer, along with the following provisions:

1. Precast telephone manholes shall be constructed to the interior manhole dimensions and details shown on the Plans.

2. The Contractor shall submit shop drawings and design calculations for each precast manhole structure for review and approval by the facility operator and the Resident Engineer prior to fabrication. Shop drawings shall show the overall structure dimensions, roof openings, window sizes and locations, sump locations, reinforcing steel and details, construction joint types and locations including sealant material proposed. The inside face of all windows (4 sides) shall be beveled and provisions made for all inserts and hardware for a complete manhole installation, including cable pulling iron embedments and cable rack insert embedments in accordance with the standards and requirements of the facility operator.

□

3. Precast manhole design criteria shall be as follows:
   - Concrete Minimum Compressive Strength: 4,000 psi or greater at 28 days.
   - Steel Reinforcement: ASTM A-615, Grade 60.
   - Design Loading: AASHTO HS20-44
   - Shop drawings and calculations shall state design methodology used and all design assumptions including soil pressures and ground water levels used in the design.

4. A 9-inch thick compacted stone ballast leveling pad shall be provided as a foundation for all precast manholes

D. Method of Measurement

The quantity to be measured for payment shall be the number of cubic yards (CY) of concrete, cast on site or pre-cast, as specified, concrete, brick, and mortar in place to the nearest hundredth of a cubic yard. No deductions will be made for the spaces occupied by steel reinforcement.

E. Price to Cover

The unit price under this item shall be a unit price per cubic yard (CY) of concrete, cast on site or pre-cast, as specified, concrete, brick, and mortar placed in the field constructed utility structure. The unit price shall cover the cost of all labor, materials, plant, equipment, insurance and incidentals required to field construct partially or totally, rebuild or modify, a utility structure. The unit price shall also include all formwork installation and removal, installation of concrete, bricks, mortar, steel reinforcement, structural steel beams, furnish and install pre-cast concrete, chimney, and installation of interior and exterior hardware, including frames and covers. The Contractor shall also install pipes, conduits, sumps, drains, sleeves, related steel or cast iron materials or equipment through the structures as shown on the drawings. Upon removal of forms, the Contractor shall remove debris and face off the entire interior of the structure. The unit price includes necessary realignment of existing ducts into the new structure up to five feet from the outside face of the new structure; any additional duct realignment required shall be paid under a separate JB item. The unit price shall further include the cost of maintaining, supporting, protecting and accommodating the integrity of all utility facilities (without disruption of service) during the work within the areas of excavation and the field constructed structure, and the furnishing of samples, as required. All work shall comply with the plans, specifications, standards, and directions of the facility operator in consultation with the Resident Engineer.

All pavement breaking, pavement removal and disposal, excavation, haul away, and disposal, furnish and install backfill, temporary pavement, sheeting, bracing, and all necessary incidentals shall be paid under item JB 406, only if required. All required break out and disposal of all types of conduits/duct banks in new structure area, including maintenance and support of cable shall be included in JB 638R. Where precast reinforced concrete manholes are used in lieu of poured in place manholes, the cost for furnishing, delivery and installation of the precast reinforced structures, additional excavation associated with the widening and deepening of trench due to increased width of precast structures and due to the placement of a stone ballast leveling pad; stone ballast; connections; and all work incidental thereto all in accordance with the Plans, Specification and Standards, shall be deemed included under this item. No additional or separate payments will be made for any work associated with the installation of precast reinforced structures.

The cost of providing an anti-freeze additive in concrete, when required, shall be paid for under Item 9.04 HW.

F. References

1. JB 406
□□JB 636E
□□JB 638R
4□Standard Utility Specifications and Drawings

□

JB 638R – BREAK OUT AND REMOVE UTILITY STRUCTURE CONTAINING ACTIVE FACILITIES

A. Description

Under this section the Contractor shall provide all labor, materials, equipment, insurance and incidentals necessary to partially or totally break out and remove existing utility structures using methods approved by the facility operator. Breaking out and removing existing utility structures shall be performed while maintaining and protecting all subsurface facilities, at locations approved by the Facility Operator. The Contractor will encounter various underground facilities, located both inside and outside the utility structure, while partially or totally breaking out and removing existing utility structures and will be required to excavate and perform work over, under, adjacent to, around, in between and in close proximity of various congested configurations of multiple facilities, conduits, pipes and cables.

All work required to partially or totally break out and remove existing utility structures shall comply with standard utility specifications and/or as directed by the facility operator and shall include but not be limited to:

- Service Boxes (various sizes)
- Manholes (various sizes)
- Vaults (various sizes)
- Valve Boxes (various sizes)
- Concrete encased conduits containing cables

B. Materials

All materials used shall be supplied by the Contractor and comply with the standards of the facility operator.

C. Method of Construction

The Contractor shall perform the necessary breaking out and removal of the existing utility structure while maintaining and protecting all subsurface facilities. The Contractor will encounter various underground facilities located both inside and outside the utility structure, while partially or totally breaking out and removing existing utility structures and will be required to excavate and perform work over, under, adjacent to, around, in between and in close proximity of various congested configurations of multiple facilities, conduits, pipes and cables, as directed by the facility operator. All work shall be done in a workmanlike manner and any damage resulting from the Contractor's operations shall be satisfactorily corrected as directed by the facility operator and at the Contractor's expense.

This item shall also apply when partially or totally breaking out and removing an existing utility structure.

The rebuilding of the utility structure is covered under JB 638N AND 638NT.

D. Method of Measurement

The quantity to be measured for payment shall be the number of cubic yards (CY) of concrete, reinforced concrete, brick, and mortar of the existing utility structure broken out, removed and disposed to the nearest hundredth of a cubic yard. No deductions will be made for the spaces occupied by steel reinforcement.

□

E. Price to Cover

The unit price bid under this item shall be a unit price per cubic yard (CY) of concrete, reinforced concrete, brick, and mortar of the existing utility structure broken out, removed and disposed. The unit price shall also cover the cost of all labor, materials, plant, equipment, insurance, and incidentals required to partially or totally break out, remove and dispose of existing utility structure. The unit price shall also include demolition of the existing utility structure, haul away and disposal of demolished materials, formwork, concrete, bricks, mortar, steel reinforcement, structural steel beams, interior hardware, exterior hardware, including frames and covers. The unit price shall further include the cost of maintaining, supporting, protecting and accommodating the integrity of all utility facilities (without disruption of service) during the work within the areas of excavation and the existing structure. All work shall comply with the plans, specifications and standards, provided by and at the directions of the facility operator.

The unit price shall include providing access to the facility operator tenants to verify and test cables before, during and after breaking out and removal of the utility and after conduit removal by the Contractor. The unit price shall include, but not limited to, opening and closing of fences; removal and replacement of temporary timber curb and opening and closing of traffic plates. Access to adjacent manholes impacted by the run is included in this item. JB 450 shall not be used in conjunction with JB 638R as JB 638R covers access to the work site at all times.

All pavement breaking, pavement removal and disposal, excavation, haul away, and disposal, furnish and install backfill, temporary pavement, sheeting, bracing, and all necessary incidentals shall be paid under item JB 406, only if required.

F. References

1. JB 406
2. JB 636E
3. JB 638R
4. Standard Utility Specifications and Drawings

□

JB 798 - MODIFICATION OF NON-CONCRETE YOKE TROLLEY STRUCTURES REMOVAL WHEN CROSSING UTILITY FACILITES

A. Description

This JB item shall only be applied to trolley structure systems that do not contain concrete yoke foundations. This JB item shall only be used for trolley systems that have rails and wood ties only.

Under this section, the Contractor shall provide all incremental labor, equipment, insurance and incidentals required to maintain and protect and accommodate the integrity of utility facilities that include but are not limited to:

1. Conduits;
2. Conductors;
3. Concrete encased Conduit banks;
4. Steel Pipes; Steam Facilities;
5. Oil-o-static Facilities;
6. Non-cost Sharing Gas Facilities;
7. Steam Facilities;

of various sizes and configurations crossing trolley structures at various angles located within a zone of protection, as indicated on Sketch JB 798, during the removal of trolley structures and subsequent backfilling operations. Utility facilities that run parallel to trolley structures are not included within this item and will be paid for under the appropriate JB item. The work shall be performed in accordance with the contract plans, the specifications, and as encountered during construction and directed by the facility operator.

B. Materials – N/A

C. Method of Construction

The Contractor shall maintain, protect, and accommodate the integrity of all utility facilities of various sizes and configurations crossing trolley structures within a zone of protection as indicated in Sketch JB 798, during removal of trolley structures and subsequent backfilling and compaction operations under other contract item(s). The facility operator shall identify the locations of all utilities within the contract area as required by New York State Industrial Code Rule 753. As provided by the Rule, the Contractor shall use hand excavation methods (pick and shovel or hand held power tools) directly below the pavement base to expose the utility and ascertain the numerical relationships and/or dimensions of these utilities with respect to the proposed excavation. Contractor shall perform test pits at locations determined by the facility operator to expose utility as specified in JB 400. Upon exposing the affected utilities sufficiently, and at the sole discretion of the facility operator to determine relationships and/or dimensions, the Contractor shall be permitted to proceed with care to remove existing trolley structure within the zone of protection whose limit shall be defined as a distance of 24 inches from the outside face of each utility crossing.

□

D. Method of Measurement

The quantity to be measured for payment shall be the number of linear feet of modified trolley structure removal within the zone of protection as indicated on JB Sketch 798, measured along the centerline of trench. The trench is defined as one track set containing two rails. The zone of protection shall be defined, for the purpose of this agreement, as the boundary/area designated on the plans or a boundary/area 24 inches to either side of each of the designated facilities, based upon available records and/or information obtained from prior or new test pits, or any combination thereof. Where overlapping of the zones occurs due to multiple facilities, the boundary/area shall be modified to one zone measured from the outside limits. The contract item specified under this section shall not be measured for payment in conjunction with other types of utility items. Modifications to work methods required in areas between zones of protection for multiple utilities or JB facilities shall not be measured for payment and are included in the price bid for this item.

E. Price to Cover

The unit price per linear foot shall include the incremental cost for all labor, equipment, insurance and incidentals required to maintain and protect and accommodate the integrity of utility facilities during the removal of trolley structures (including rails, timber ties, trolley conduits and main conduit), and backfilling and compacting within a zoned area designated for protection of utilities by the facility operator.

The price shall include any additional cutting, removing and disposing of roadway materials; hand or machine excavation; trucking and disposing of excavated materials, installation and removal of sheeting; and furnishing, installing and compacting backfill that may be required to support, protect, maintain and accommodate the integrity of utility facilities. The price shall also include means to ascertain the numerical relationship between utility and the trolley structure and the incremental cost for providing all vehicular and pedestrian traffic maintenance necessary to perform the work.

The Contractor shall be responsible for any and all damages resulting from and/or due to trolley demolition operations that are not performed in accordance with the specifications. When this work is performed within a mass excavation area, a credit will be taken for the removed trolley structure.

F. References

1. NYS Industrial Code Rule 753
2. Sketch JB 798

□

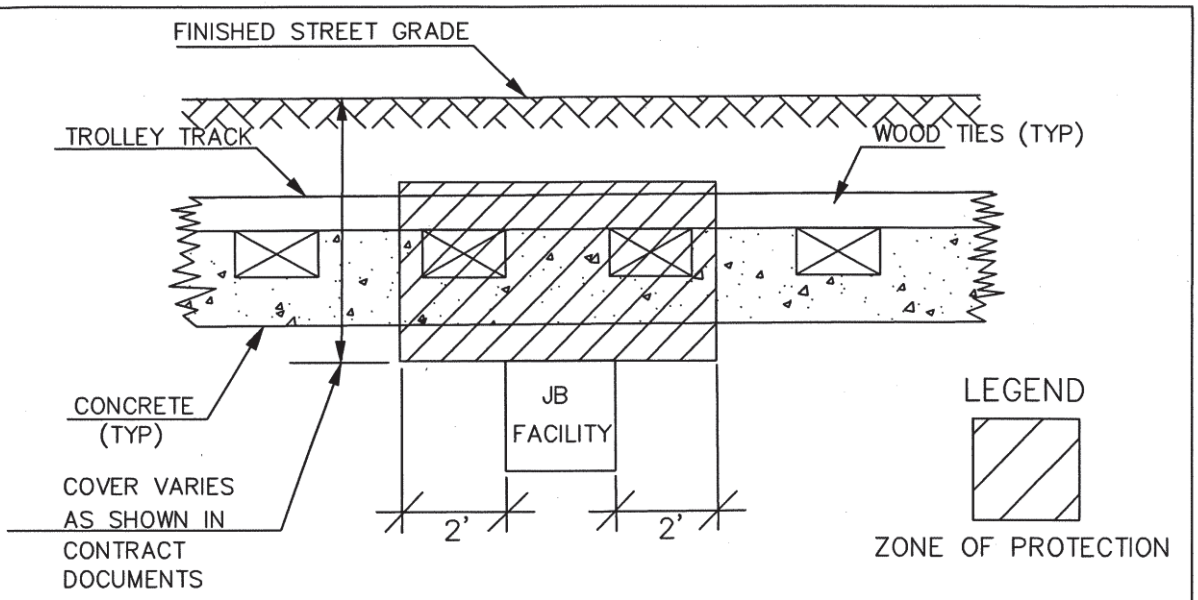

SECTION OF JB FACILITIES CROSSING TROLLEY TRACKS

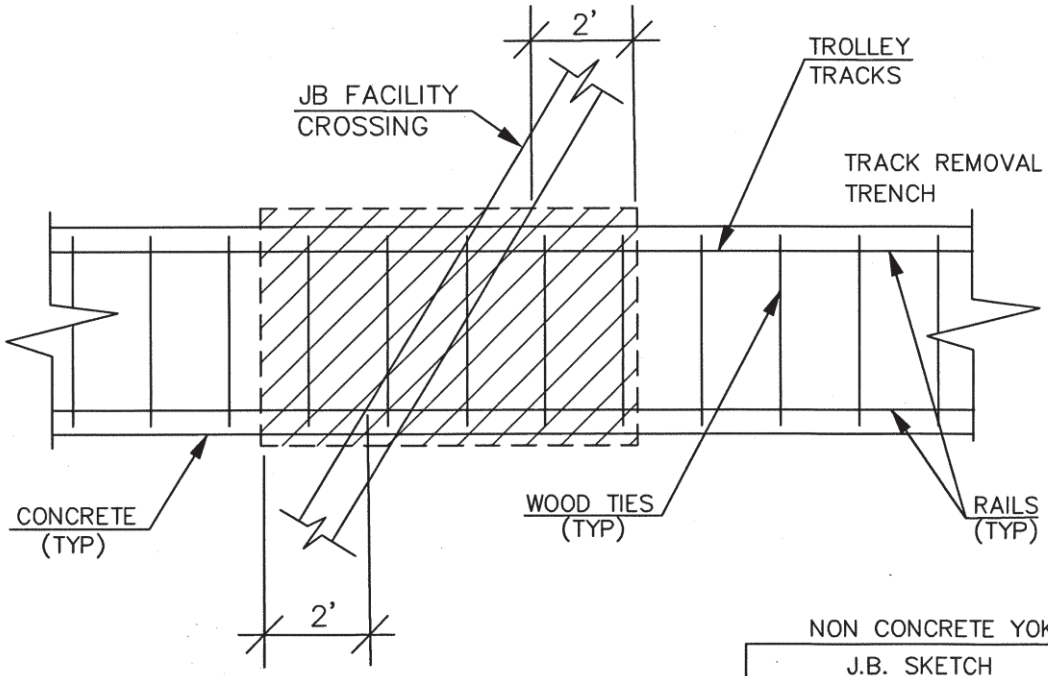

PLAN OF JB FACILITIES CROSSING TROLLEY TRACKS

NON CONCRETE YOKE

J.B. SKETCH

ACCOMODATION FACILITIES CROSSING TROLLEY RAILROAD STRUCTURES

REVISIONS	CONTRACT NO.	SKETCH NO.
11/28/2018		JB 798

□

JB 799 - MODIFICATION OF NON CONCRETE TROLLEY STRUCTURES REMOVAL PARALLEL TO UTILITY FACILITIES

A. Description

This JB item shall only be applied to trolley structure systems that do not contain concrete yoke foundations. This JB item shall only be used for trolley systems that have rails and wood ties only.

Under this section, the Contractor shall provide all incremental labor, equipment, insurance and incidentals required to maintain, protect, support and accommodate the integrity of utility facilities that include but are not limited to:

1. Conduits;
2. Conductors;
3. Concrete encased Conduit banks;
4. Steel Pipes; Steam Facilities;
5. Oil-o-static Facilities; and
6. Non-cost Sharing Gas Facilities;
7. Steam Facilities.

of various sizes and configurations paralleling or encroaching trolley structures located within a zone of protection, as indicated on the Plans or as directed by the field representative, during all trolley structure removal operations and subsequent backfilling operations. Utility facilities which cross over, under and between the trolley structures are not included within this item and will be paid for under the appropriate JB item. The work shall be performed in accordance with the contract plans, the specifications, and as encountered during construction and directed by the facility operator(s).

B. Materials – N/A

C. Method of Construction

The Contractor shall maintain, protect, support and accommodate the integrity of all utility facilities of various sizes and configurations paralleling or encroaching trolley structures within a zone of protection as indicated on the Plans or as directed by the field representative, during removal of trolley structures and subsequent backfilling and compaction operations under other contract item(s). The facility operator(s) shall identify the locations of all utilities within the contract area as required by New York State Industrial Code Rule 753. As provided by the Rule, the Contractor shall use hand excavation methods (pick and shovel or hand held power tools) directly below the pavement base to expose the utility and ascertain the numerical relationships and/or dimensions of these utilities with respect to the proposed excavation. Contractor shall perform test pits at locations determined by the facility operator to expose utility as specified in JB 400. Upon exposing the affected utilities sufficiently, and at the sole discretion of the facility operator(s) to determine relationships and/or dimensions, the Contractor shall be permitted to proceed with care to remove existing trolley structure within the zone of protection whose limit shall be defined as a distance of 24 inches from the outside face of each utility to the edge of the trolley structure.

□

D. Method of Measurement

The quantity to be measured for payment shall be the number of linear feet of modified trolley structure removal within the zone of protection as indicated on the plans, measured along the centerline of trench. The trench is defined as one track set containing two rails. The contract item specified under this section shall not be measured for payment in conjunction with other types of utility items. Modifications to work methods required in areas between zones of protection for multiple utilities or JB facilities shall not be measured for payment and are included in the price bid for this item.

E. Price to Cover

The unit price per linear foot shall include the incremental cost for all labor, equipment, insurance and incidentals required to maintain, protect, support and accommodate the integrity of utility facilities paralleling or encroaching trolley structures during the removal of trolley structures (including rails, timber ties, trolley conduits, and main conduits), and backfilling and compacting within a zoned area designated for protection of utilities by the facility operator(s).

The unit price shall also include any additional cutting, removing and disposing of roadway materials; hand or machine excavation; trucking and disposing of excavated materials, installation and removal of sheeting; and furnishing, installing and compacting backfill that may be required to support, protect, maintain and accommodate the integrity of utility facilities. The price shall also include means to ascertain the numerical relationship between utility and the trolley structure, and the incremental cost for providing all vehicular and pedestrian traffic maintenance necessary to perform the work.

The Contractor shall be responsible for any and all damages resulting from and/or due to trolley demolition operations that are not performed in accordance with the specifications.

When this work is performed within a mass excavation area, a credit will be taken for the removed trolley structure.

F. References

1. NYS Industrial Code Rule 753
2. Sketch JB 799

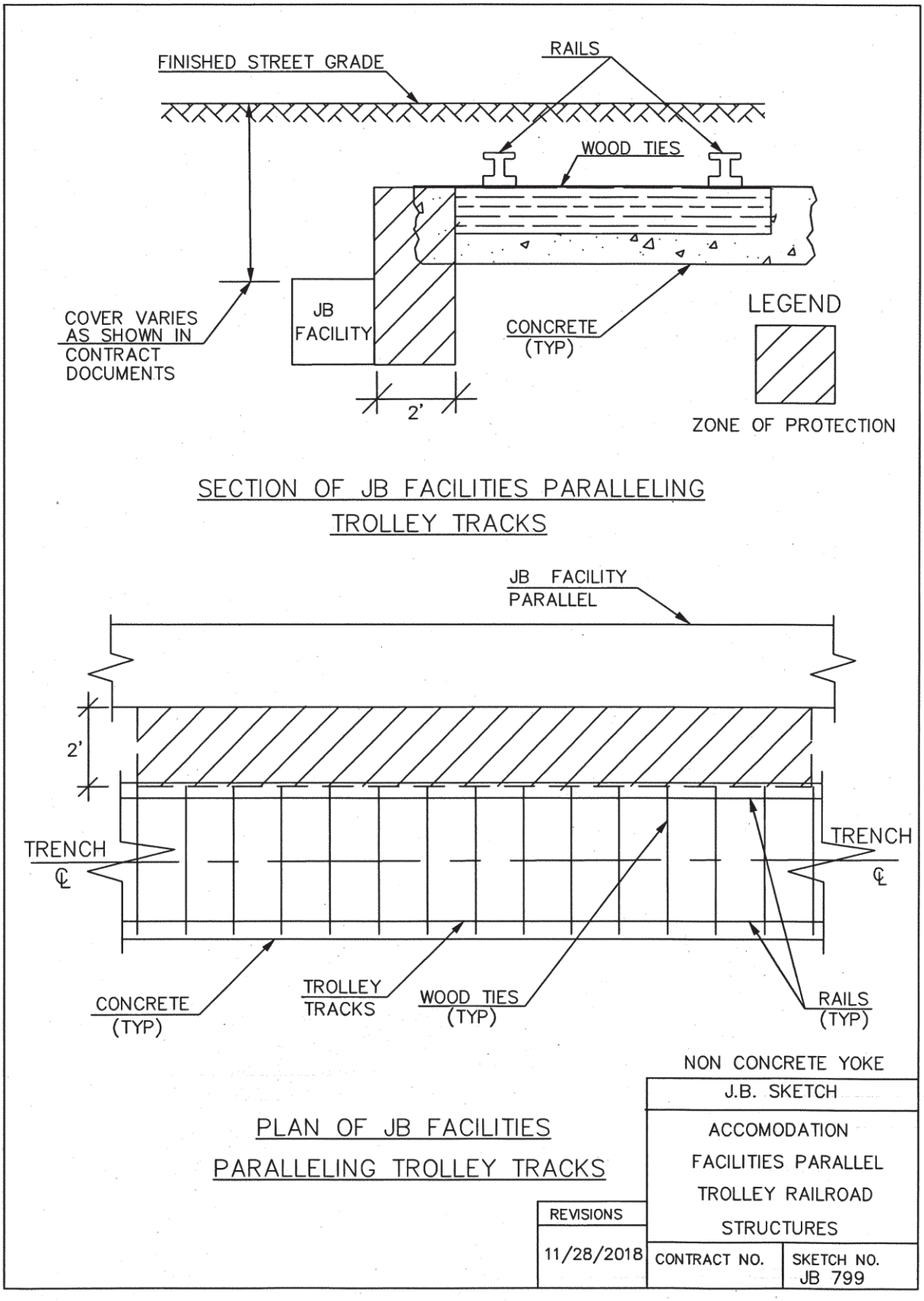
FINISHED STREET GRADE
RAILS
WOOD TIES
COVER VARIES AS SHOWN IN CONTRACT DOCUMENTS
JB FACILITY
CONCRETE (TYP)
2'
LEGEND
ZONE OF PROTECTION
SECTION OF JB FACILITIES PARALLELING TROLLEY TRACKS
JB FACILITY PARALLEL
2'
TRENCH ℄
TRENCH ℄
CONCRETE (TYP)
TROLLEY TRACKS
WOOD TIES (TYP)
RAILS (TYP)
PLAN OF JB FACILITIES PARALLELING TROLLEY TRACKS
NON CONCRETE YOKE
J.B. SKETCH
ACCOMODATION FACILITIES PARALLEL TROLLEY RAILROAD STRUCTURES
REVISIONS
11/28/2018
CONTRACT NO.
SKETCH NO.
JB 799

□

JB 800 - MODIFICATION OF CONCRETE YOKE TROLLEY STRUCTURES REMOVAL WHEN CROSSING UTILITY FACILITES

A. Description

This JB item shall only be applied to trolley structure systems that contain concrete yoke foundations. This JB item shall not be used for trolley systems that have rails and wood ties only. Under this section, the Contractor shall provide all incremental labor, equipment, insurance and incidentals required to maintain and protect and accommodate the integrity of utility facilities that include but are not limited to:

1. Conduits
2. Conductors
3. Concrete encased conduit banks
4. Steel pipes
5. Oil-o-static facilities
6. Non-cost Sharing Gas Facilities and
7. Steam Facilities

of various sizes and configurations crossing trolley structures at various angles located within a zone of protection, as indicated on Sketch JB 800, during the removal of trolley structures and subsequent backfilling operations. Utility facilities that run parallel to trolley structures are not included within this item and will be paid for under the appropriate JB item. The work shall be performed in accordance with the contract plans, the specifications, and as encountered during construction and directed by the facility operator.

B. Materials – N/A

C. Method of Construction

The Contractor shall maintain, protect, and accommodate the integrity of all utility facilities of various sizes and configurations crossing trolley structures within a zone of protection as indicated in Sketch JB 800, during removal of trolley structures and subsequent backfilling and compaction operations under other contract item(s). The facility operator shall identify the locations of all utilities within the contract area as required by New York State Industrial Code Rule 753. As provided by the Rule, the Contractor shall use hand excavation methods (pick and shovel or hand held power tools) directly below the pavement base to expose the utility and ascertain the numerical relationships and/or dimensions of these utilities with respect to the proposed excavation. Contractor shall perform test pits to expose the utilities as specified under JB 400. Upon exposing the affected utilities sufficiently, and at the sole discretion of the facility operator to determine relationships and/or dimensions, the Contractor shall be permitted to proceed with hand held power tools to remove existing trolley structure within the zone of protection whose limit shall be defined as a perimeter located 24 inches from the outside face of each utility crossing.

D. Method of Measurement

The quantity to be measured for payment shall be the number of linear feet of modified trolley structure removal within the zone of protection as indicated on JB Sketch 800, measured along the centerline of trench. The trench is defined as one track set containing two rails. The zone of protection shall be defined, for the purpose of this agreement, as the boundary/area designated on the plans or a boundary/area 3 feet to either side of each of the designated facilities, based upon available records and/or information obtained from prior or new test pits, or any combination thereof. Where overlapping of the zones occurs due to multiple facilities, the boundary/area shall be modified to one zone measured from the outside limits. The contract item specified under this section shall not be measured for payment in conjunction with other types of utility items. Modifications to work methods required in areas between zones of protection for multiple utilities or JB facilities shall not be measured for payment and are included in the price bid for this item.

□

E. Price to Cover

The unit price per linear foot shall include the incremental cost for all labor, equipment, insurance and incidentals required to maintain and protect and accommodate the integrity of utility facilities during the removal of trolley structures (including rails, timber ties, yokes, trolley conduits, main conduit, rail and yoke foundations), and backfilling and compacting within a zoned area designated for protection of utilities by the facility operator.

The unit price shall also include any additional cutting, removing and disposing of roadway materials; hand or machine excavation; trucking and disposing of excavated materials, installation and removal of sheeting; and furnishing, installing and compacting backfill that may be required to support, protect, maintain and accommodate the integrity of utility facilities. The unit price shall also include the incremental cost for providing all vehicular and pedestrian traffic maintenance necessary to perform the work.

The Contractor shall be responsible for any and all damages resulting from and/or due to trolley demolition operations that are not performed in accordance with the specifications.

When this work is performed within a mass excavation area, a credit will be taken for the removed trolley structure.

F. References

1. NYS Industrial Code Rule 753
2. Sketch JB 800

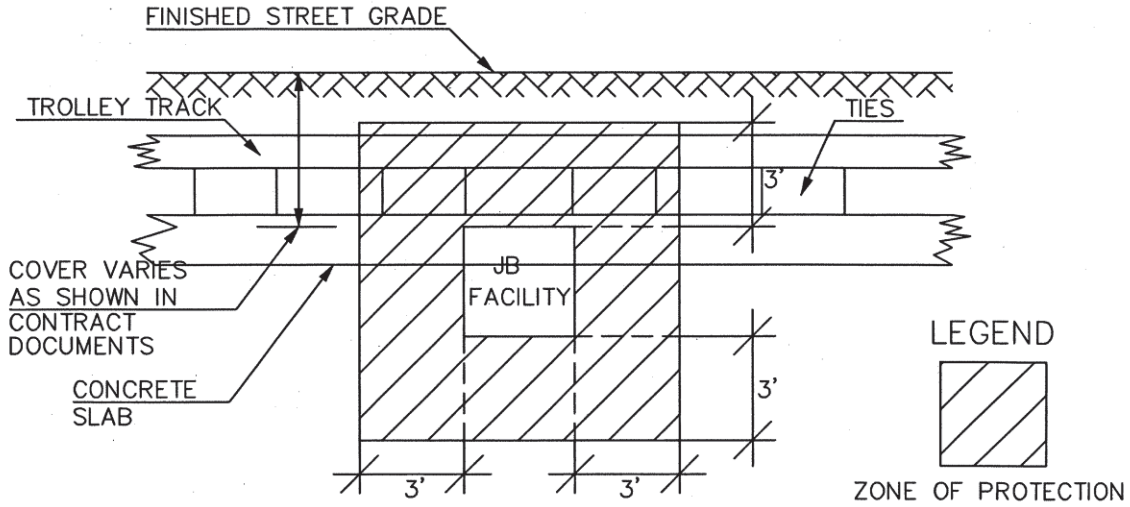

SECTION OF JB FACILITIES CROSSING TROLLEY TRACKS

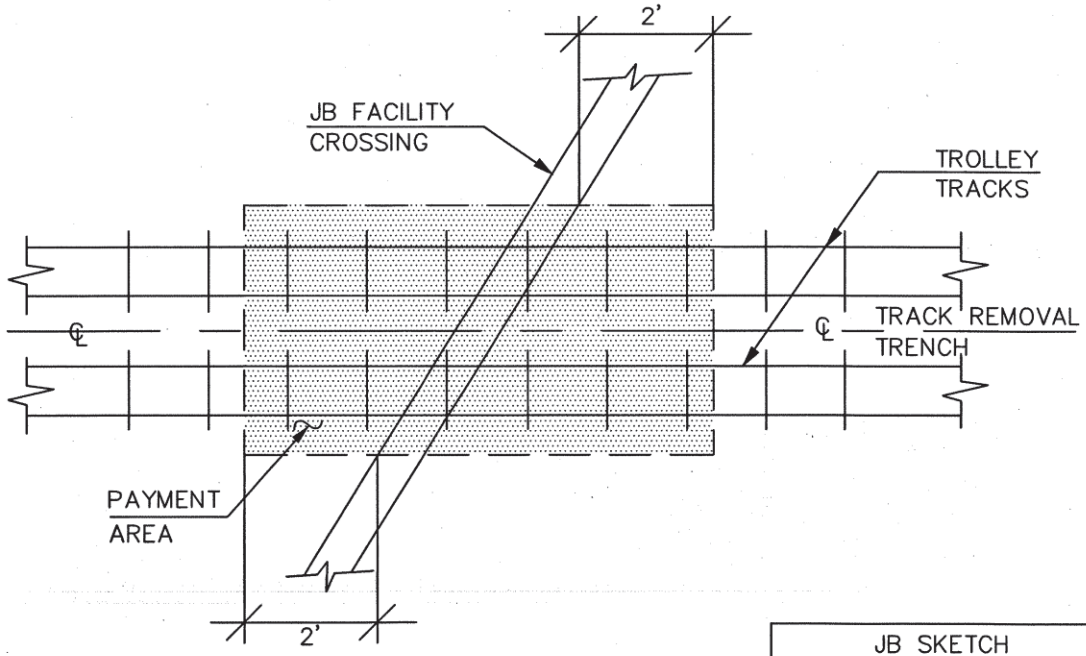

PLAN OF JB FACILITIES CROSSING TROLLEY TRACKS

JB SKETCH	
ACCOMODATION FACILITIES AT TROLLEY RAILROAD STRUCTURES	
REVISIONS	
11/28/2018	CONTRACT NO. / SKETCH NO. JB 800

□

JB 801 - MODIFICATION OF CONCRETE YOKE TROLLEY STRUCTURES REMOVAL PARALLEL TO UTILITY FACILITIES

A. Description

This JB item shall only be applied to trolley structure systems that contain concrete yoke foundations. This JB item shall not be used for trolley systems that have rails and wood ties only. Under this section, the Contractor shall provide all incremental labor, equipment, insurance and incidentals required to maintain, protect, support and accommodate the integrity of utility facilities that include but are not limited to:

1. Conduits
2. Conductors
3. Concrete encased conduit banks
4. Steel pipes
5. Oil-o-static facilities
6. Non-cost sharing gas facilities and
7. Steam facilities

of various sizes and configurations paralleling or encroaching trolley structures located within a zone of protection, as indicated in sketch JB 801 or as directed by the field representative, during all trolley structure removal operations and subsequent backfilling operations. Utility facilities which cross over, under and between the trolley structures are not included within this item and will be paid for under the appropriate JB item. The work shall be performed in accordance with the contract plans, the specifications, and as encountered during construction and directed by the facility operator(s).

B. Materials – N/A

C. Method of Construction

The Contractor shall maintain, protect, support and accommodate the integrity of all utility facilities of various sizes and configurations paralleling or encroaching trolley structures within a zone of protection as indicated in sketch 801 or as directed by the field representative, during removal of trolley structures and subsequent backfilling and compaction operations under other contract item(s). The facility operator(s) shall identify the locations of all utilities within the contract area as required by New York State Industrial Code Rule 753. As provided by the Rule, the Contractor shall use hand excavation methods (pick and shovel or hand held power tools) directly below the pavement base to expose the utility and ascertain the numerical relationships and/or dimensions of these utilities with respect to the proposed excavation. Contractor shall perform test pits to expose the utilities as specified under JB 400. Upon exposing the affected utilities sufficiently, and at the sole discretion of the facility operator(s) to determine relationships and/or dimensions, the Contractor shall be permitted to proceed with hand held power tools to remove existing trolley structure within the zone of protection whose limit shall be defined as a perimeter located 24 inches from the outside face of each utility.

D. Method of Measurement

The quantity to be measured for payment shall be the number of linear feet of modified trolley structure removal within the zone of protection as indicated on the plans, measured along the centerline of trench. The trench is defined as one track set containing two rails. The contract item specified under this section shall not be measured for payment in conjunction with other types of utility items. Modifications to work methods required in areas between zones of protection for multiple utilities or JB facilities shall not be measured for payment and are included in the price bid for this item.

□

E. Price to Cover

The unit price per linear foot shall include the incremental cost for all labor, equipment, insurance and incidentals required to maintain, protect, support and accommodate the integrity of utility facilities paralleling or encroaching trolley structures during the removal of trolley structures (including rails, timber ties, yokes, trolley conduits, main conduit, rail and yoke foundations), and backfilling and compacting within a zoned area designated for protection of utilities by the facility operator(s).

The unit price shall also include any additional cutting, removing and disposing of roadway materials; hand or machine excavation; trucking and disposing of excavated materials, installation and removal of sheeting; and furnishing, installing and compacting backfill that may be required to support, protect, maintain and accommodate the integrity of utility facilities. The unit price shall also include the incremental cost for providing all vehicular and pedestrian traffic maintenance necessary to perform the work.

The Contractor shall be responsible for any and all damages resulting from and/or due to trolley demolition operations that are not performed in accordance with the specifications.
When this work is performed within a mass excavation area, a credit will be taken for the removed trolley structure.

F. References

1. NYS Industrial Code Rule 753
2. Sketch JB 801

□
□
□
□

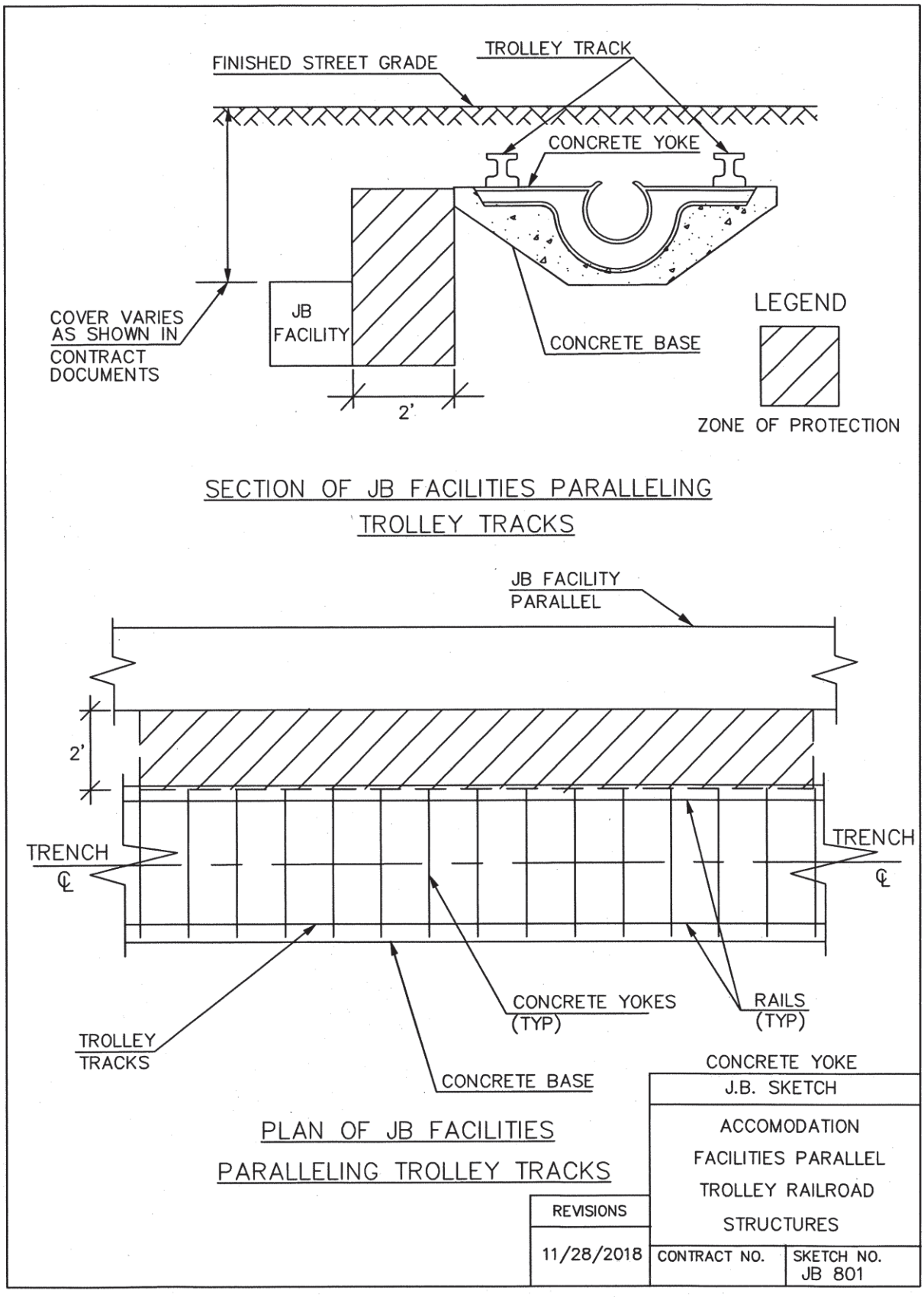
FINISHED STREET GRADE
TROLLEY TRACK
CONCRETE YOKE
COVER VARIES AS SHOWN IN CONTRACT DOCUMENTS
JB FACILITY
CONCRETE BASE
2'
LEGEND
ZONE OF PROTECTION
SECTION OF JB FACILITIES PARALLELING TROLLEY TRACKS
JB FACILITY PARALLEL
2'
TRENCH
℄
TRENCH
℄
TROLLEY TRACKS
CONCRETE YOKES (TYP)
RAILS (TYP)
CONCRETE BASE
PLAN OF JB FACILITIES PARALLELING TROLLEY TRACKS
CONCRETE YOKE
J.B. SKETCH
ACCOMODATION FACILITIES PARALLEL TROLLEY RAILROAD STRUCTURES
REVISIONS
11/28/2018
CONTRACT NO.
SKETCH NO. JB 801

□□□□□□

JB 803 - LINE CUT BY PNEUMATIC TOOLS IN LIEU OF SAW CUT ASSOCIATED WITH ROADWAY REMOVAL OPERATIONS

A. Description

Under this section, the Contractor shall provide all incremental labor, equipment, insurance and incidentals required to maintain, protect, support and accommodate the integrity of utility facilities that include but are not limited to oil o static facilities, and any other facilities of various sizes and configurations paralleling or crossing proposed saw cut areas located within a zone of protection associated with roadway removal operations, as determined by the utility operator. Utility facilities which cross under and between the saw cut area are included within this item. The work shall be performed in accordance with the contract plans, the specifications, and as encountered during construction and determined by the facility operator(s).

B. Materials – N/A

C. Method of Construction

The Contractor shall maintain, protect, support and accommodate the integrity of all utility facilities of various sizes and configurations paralleling or crossing the saw cut area within a zone of protection as determined by the Facility Operator, during the roadway saw cut. The facility operator(s) shall identify the locations of all utilities within the contract area as required by New York State Industrial Code Rule 753. As provided by the Rule, the Contractor shall use pneumatic tools to line cut the pavement in lieu of saw cut by machine. It is the sole discretion of the facility operator(s) to determine relationships and/or dimensions, and advise the Contractor to proceed with pneumatic tools to line cut existing roadway structure.

D. Method of Measurement

The quantity to be measured for payment shall be the number of linear feet of line cut performed by pneumatic tools measured along the length of cut. The contract item specified under this section shall not be measured for payment in conjunction with other types of utility items. Modifications to work methods required in areas between zones of protection for multiple utilities or JB facilities shall not be measured for payment and are included in the price bid for this item.

JB 803.1 Line cut Asphalt Roadway (LF)
JB 803.2 Line cut any combination of Asphalt and Concrete Roadway (LF)
JB 803.3 Line cut any combination of Asphalt, Concrete, and Belgium Block (LF)

E. Price to Cover

The unit price per linear foot shall include the incremental cost for all labor, equipment, insurance and incidentals required to maintain, protect, support and accommodate the integrity of utility facilities paralleling or crossing the saw cut area associated with the removal of roadway designated for protection of utilities by the facility operator(s).

The unit price shall also include any additional cutting, removing and disposing of roadway materials; and any backfill that may be required to support, protect, maintain and accommodate the integrity of utility facilities. The price shall also include the incremental cost for providing all vehicular and pedestrian traffic maintenance necessary to perform the work.

The Contractor shall be responsible for any and all damages resulting from and/or due to saw cutting operations that are not performed in accordance with the specifications.

F. References

1. NYS Industrial Code Rule 753

JB 850 (CUSTOM – HWMWTCA7E) - Placing Rubber Sheets for Utility Facilities

A. Description

Under this Section, the Contractor shall place permanent Rubber Sheets supplied by the facility operator(s) to protect utility facilities where directed by the facility operator(s) in consultation with the Resident Engineer.

B. Materials

Materials shall be supplied and delivered by the facility operator(s) at the job site or Construction Yard as directed by the Contractor.

C. Method of Construction

Rubber Sheets shall be placed in accordance with the attached facility operator(s) Specification for the Installation of High Pressure Pipe For 69, 138 and 345 kV Cable Systems, CE-TS-3352, under section 1.2.4.

D. Method of Measurement

The quantity for payment shall be the area of permanent rubber sheets installed and measured in Square Feet (S.F.). Each rubber sheet is typically 1/2" thick, 48" wide by 18' long.

E. Price to Cover

The unit price bid shall cover the cost of all labor, material, equipment, insurance, and incidentals necessary to complete the work.

F. References

1. Specification for the Installation of High Pressure Pipe For 69, 138 and 345 kV Cable Systems, CE-TS-3352.

JB 900 - EXTRA UTILITY WORK COSTS ALLOWANCE

A. Description - Use of contract Item JB-900 "Extra Utility Work Costs Allowance" - Fixed Sum

This item is applicable only for extra Utility Work. If the Utility determines that there is extra Utility Work for which there are no items in the Unit Price Book, then the Utility and City Contractor shall negotiate the cost of supporting and protecting and/or alleviating the impact on the Public Work caused by the extra Utility Work with each other with the understanding that the performance of Public Work shall continue during all negotiations and discussions.

(a) If the parties reach an agreement on cost for the extra Utility Work when there are no bid items available in the Unit Price Book, then the City Contractor and the Utility shall jointly submit to the City's Resident Engineer the agreed upon price along with all supporting documentation. The City Contractor shall be paid by requisitions submitted in accordance with the agreed upon price. All such extra utility work shall be totaled and the total shall be paid under Item JB 900.

(b) If the parties do not reach an agreement on the extra Utility Work within fifteen (15) Business Days from the start of negotiations, then the parties will resolve the dispute through the dispute resolution process, as set forth in Appendix "JB-A". During the arbitration process, the extra Utility Work will be performed and paid for based on the Utility's Final Offer, as set forth in Appendix JB-A.

(c) The total value of such method of payment shall be paid under Item JB 900.

B. Materials

All materials shall be supplied by the Contractor and approved by the facility operator in consultation with the Resident Engineer.

C. Method of Construction

As required.

D. Method of Measurement

No guarantee is given that this allowance item will in fact be required in this contract. The estimated "fixed sum" amount in the Bid Schedule is included in the total bid solely to ensure funding availability. The quantity to be measured for payment shall be each lump sum (LS) amount of the extra utility work. Payments for extra Utility Work shall be made under the JB-900 allowance item and shall be documented with a proper Change Order Request, provided that sufficient funding of JB-900 for each affected utility(ies) is available. Change Order Requests and Overrun Change Order Requests for Utility Work shall be submitted separately from Public Work Change Order Requests and Overrun Change Order Requests. The costs breakdown by items for each participating Utility shall be clearly tabulated and sub-totaled. Public Work costs shall not be

combined with Utility Work Costs on Change Order Requests of any type.

E. Price to Cover

Payment made under each lump sum (LS) amount, shall cover the cost of all labor, materials, equipment, supervision, insurance and incidentals necessary to complete the extra utility work. The price includes the modification of any methods of construction and operation and associated changes in sequencing of the City contract work as required, in order to perform the extra utility work and/or the City contract work. Each lump sum (LS) amount includes all special considerations due to all site conditions, loss of productivity and efficiency, idle time, demobilization and remobilization, site maintenance, maintenance of traffic and protection, extended performance, extended overhead costs, extended engineering and extended home office costs in connection with the extra utility work. In consideration of each lump sum (LS) amount, the contractor waives all claims for impacts arising from the extra utility work, which shall be deemed included in each lump sum amount paid. The total estimated cost of this item is the "fixed sum" amount shown for this item in the Bid Schedule. No guarantee is given that the actual lump sum cost for this item will in fact be the "fixed sum" amount. The "fixed sum" amount is included in the total bid solely to ensure that sufficient monies will be available to pay the Contractor under this item.

F. References

None

JB 1006V - 1020V VERTICAL OR ROLLED WATERMAIN OFFSET

A. Description

Under this section, the contractor shall provide all incremental labor, materials, equipment, insurance and incidentals required to offset water mains for vertical or rolled movement around exposed subsurface utilities encountered during construction. The work shall be performed in accordance with the contract plans, specifications and at the direction of the facility operator, upon written approval from the resident engineer. The trenches to be excavated shall be determined by the size of the water main and the extent of adjustment required to avoid utilities interferences during all phases of contract work. This work shall be performed in accordance with all the applicable City and utility specifications, and at the direction of the facility operator.

B. Materials

The contractor shall supply all materials necessary to offset the city water main(s) in accordance with the City standard water main specifications and approved by the facility operator.

C. Methods of Construction

The contractor shall cut, break and remove various thicknesses of surface and base pavement, excavate by hand to expose all utility facilities within the trench. Upon exposing the affected utility(s) determine clearances at the sole discretion of the facility operator. The contractor shall then be permitted to proceed with a combination of hand and machine excavation sufficient to accommodate the appropriate water main offset(s) under or above all utility facilities interfering with the installation of the water main as directed by the facility operator.

The contractor shall layout, measure, load and transport, unload, job store, as necessary, handle and lay fittings or portion of pipe, including labor, equipment and material for the complete installation of a water main offset including, but not limited to, fittings, all types of joints, retainer glands, rods and bands.

D. Method of Measurement

The quantity to be measured for vertical or rolled water main offset(s) shall be each (ea) water main offset which shall be defined as one (1) vertical or rolled water main offset in its final location with four (4) fittings and all appurtenances to avoid a single or multiple utility interference as directed by the facility operator. Each type of water main offset shall be paid for separately. The types of water main offsets are defined as follows:

1. JB 1006V – 6" Vertical or rolled water main offset
2. JB 1008V – 8" Vertical or rolled water main offset
3. JB 1012V – 12" Vertical or rolled water main offset
4. JB 1016V – 16" Vertical or rolled water main offset
5. JB 1020V – 20" Vertical or rolled water main offset

E. Price to Cover

The price for a water main offset shall include the cost of all labor, materials, equipment, insurance, and incidentals necessary to completely install a full water main offset inclusive of, but is not limited to, four (4) fittings, all types of joints, retainer glands, rods, bands and one (1) foot of sand around the pipe. If less than four (4) fittings are used, payment for this item shall be proportional to the number of fittings installed. For example, if 2 fittings are installed payment for this item shall be 50% of the applicable price. The contractor shall protect and maintain the integrity of the interfering facilities without disruption of service to the utility facility customers and in accordance with the contract documents. All associated maintenance of traffic, traffic plates, sheeting, cutting, breaking and removal of various thickness of surface and base pavement, excavating by hand to expose existing facilities, widening the trench, and any extra depth to facilitate the work, snaking, furnish, place and tamp backfill after water main installation, required removing, trucking, storing, and dispensing of material shall be deemed included in the unit price. The price shall also include the cost of providing temporary pavement restoration, as required. Permanent pavement restoration, if applicable, shall be paid under appropriate City items. The support and protection of utilities crossings encountered while performing this work shall be included in this JB item. No additional payment shall be made for utility crossings.

E. References

1. Sketch JB 1000V

□

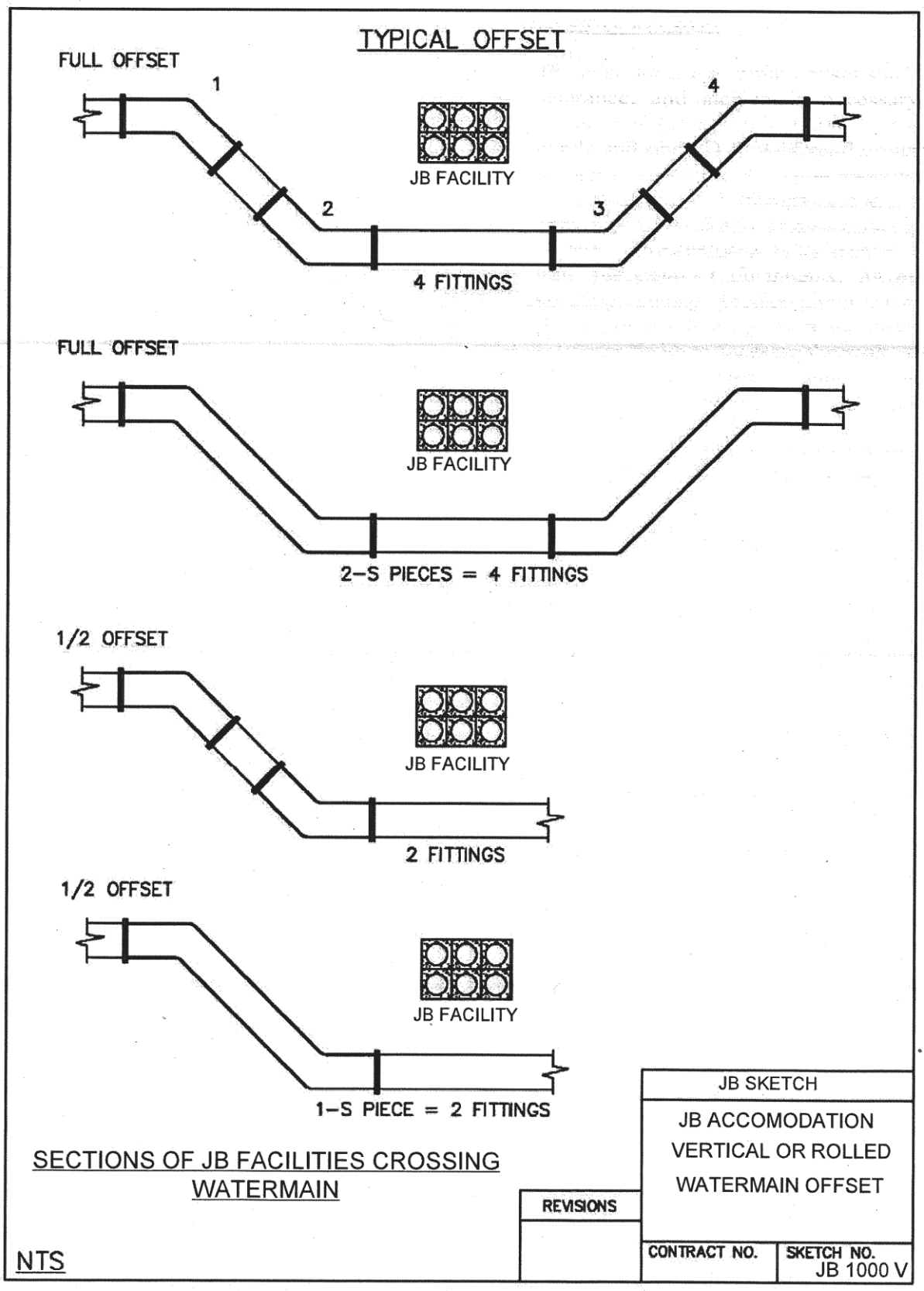
TYPICAL OFFSET
FULL OFFSET
1
2
3
4
JB FACILITY
4 FITTINGS
FULL OFFSET
JB FACILITY
2–S PIECES = 4 FITTINGS
1/2 OFFSET
JB FACILITY
2 FITTINGS
1/2 OFFSET
JB FACILITY
1–S PIECE = 2 FITTINGS
SECTIONS OF JB FACILITIES CROSSING WATERMAIN
NTS
REVISIONS
JB SKETCH
JB ACCOMODATION VERTICAL OR ROLLED WATERMAIN OFFSET
CONTRACT NO.
SKETCH NO.
JB 1000 V

□

□

LISTING OF COMPANY (IES) NAMED FOR THIS CONTRACT

COMPANY NAME	CONTACT NAME	CONTACT TELEPHONE
CON EDISON	O' NEIL WRIGHT	212-460-3870
ECS	AUBREY MAKHANLALL	516-758-3705
ALTICE/CABLE VISION	AL CLARK	718-861-7382

□
□
□
□
□

□
□
□
□
□
□
□
□
□
□

[illegible]

[illegible]

[illegible]

□

□

□

JOINT BID WORKSHEET

ENGINEER'S ESTIMATE OF QUANTITY AND TYPES OF INTERFERENCE

FOR CONSOLIDATED EDISON COMPANY OF NEW YORK

SANDRESM1

EAST SIDE COASTAL RESILIENCY

BOROUGH OF MANHATTAN

JOINT BID ITEM NUMBER	DESCRIPTION	UNITS	ESTIMATED QUANTITY
JB 100.1	UTILITIES CROSSING TRENCH FOR CATCH BASIN CHUTE CONNECT. AND/OR TESTPIT (TYPE .1)	EA	10
JB 100.2	UTILITIES CROSSING TRENCH FOR CATCH BASIN CHUTE CONNECT. AND/OR TESTPIT (TYPE .2)	EA	5
JB 100.3	UTILITIES CROSSING TRENCH FOR CATCH BASIN CHUTE CONNECT. AND/OR TESTPIT (TYPE .3)	EA	3
JB 101.1	UTILITIES CROSSING TRENCH FOR SEWERS UP TO AND INCL. 24" DIAMETER (TYPE .1)	EA	3
JB 101.2	UTILITIES CROSSING TRENCH FOR SEWERS UP TO AND INCL. 24" DIAMETER (TYPE .2)	EA	2
JB 101.3	UTILITIES CROSSING TRENCH FOR SEWERS UP TO AND INCL. 24" DIAMETER (TYPE .3)	EA	8
JB 102.1	UTILITIES CROSSING TRENCH FOR SEWERS OVER 24" TO 36" DIAMETER (TYPE .1)	EA	1
JB 102.2	UTILITIES CROSSING TRENCH FOR SEWERS OVER 24" TO 36" DIAMETER (TYPE .2)	EA	3
JB 103.1	UTILITIES CROSSING TRENCH FOR SEWERS OVER 36" TO 48" DIAMETER (TYPE .1)	EA	3
JB 103.2	UTILITIES CROSSING TRENCH FOR SEWERS OVER 36" TO 48" DIAMETER (TYPE .2)	EA	10
JB 103.3	UTILITIES CROSSING TRENCH FOR SEWERS OVER 36" TO 48" DIAMETER (TYPE .3)	EA	6
JB 105.2	UTILITIES CROSSING TRENCH FOR SEWERS OVER 54" TO 60" DIAMETER (TYPE .2)	EA	1
JB 105.3	UTILITIES CROSSING TRENCH FOR SEWERS OVER 54" TO 60" DIAMETER (TYPE .3)	EA	2
JB 106.2	UTILITIES CROSSING TRENCH FOR SEWERS OVER 60" TO 72" DIAMETER (TYPE .2)	EA	1
JB 106.3	UTILITIES CROSSING TRENCH FOR SEWERS OVER 60" TO 72" DIAMETER (TYPE .3)	EA	2
JB 108.1	UTILITIES CROSSING TRENCH FOR WATERMAIN UP TO AND INCL. 12" DIAMETER (TYPE .1)	EA	7
JB 108.2	UTILITIES CROSSING TRENCH FOR WATERMAIN UP TO AND INCL. 12" DIAMETER (TYPE .2)	EA	8

□□□□□□□□□□0□□

□□□□□□□□□□□□□□□□0□0□

□□□□□□

JOINT BID WORKSHEET

ENGINEER'S ESTIMATE OF QUANTITY AND TYPES OF INTERFERENCE

FOR CONSOLIDATED EDISON COMPANY OF NEW YORK

SANDRESM1

EAST SIDE COASTAL RESILIENCY

BOROUGH OF MANHATTAN

JOINT BID ITEM NUMBER	DESCRIPTION	UNITS	ESTIMATED QUANTITY
JB 108.3	UTILITIES CROSSING TRENCH FOR WATERMAIN UP TO AND INCL. 12" DIAMETER (TYPE .3)	EA	13
JB 117B.1	UTILITIES CROSSING SHEET PILES FOR FLOOD WALL/GATE (TYPE .1)	EA	3
JB 117B.2	UTILITIES CROSSING SHEET PILES FOR FLOOD WALL/GATE (TYPE .2)	EA	12
JB 117B.3	UTILITIES CROSSING SHEET PILES FOR FLOOD WALL/GATE (TYPE .3)	EA	1
JB 117B.4	UTILITIES CROSSING SHEET PILES FOR FLOOD WALL/GATE (TYPE .4)	EA	3
JB 117B.5	UTILITIES CROSSING SHEET PILES FOR FLOOD WALL/GATE (TYPE .5)	EA	1
JB 117C.1	UTILITIES CROSSING VARIOUS TYPES OF INDIVIDUAL PILES FOR FLOOD WALL/GATE (TYPE .1)	EA	13
JB 117C.2	UTILITIES CROSSING VARIOUS TYPES OF INDIVIDUAL PILES FOR FLOOD WALL/GATE (TYPE .2)	EA	8
JB 117C.3	UTILITIES CROSSING VARIOUS TYPES OF INDIVIDUAL PILES FOR FLOOD WALL/GATE (TYPE .3)	EA	1
JB 117C.4	UTILITIES CROSSING VARIOUS TYPES OF INDIVIDUAL PILES FOR FLOOD WALL/GATE (TYPE .4)	EA	1
JB 118B.1	UTILITIES CROSSING THROUGH FLOOD WALL/GATES ON SHEET PILES (TYPE.1)	EA	1
JB 118B.2	UTILITIES CROSSING THROUGH FLOOD WALL/GATES ON SHEET PILES (TYPE.2)	EA	1
JB 118B.3	UTILITIES CROSSING THROUGH FLOOD WALL/GATES ON SHEET PILES (TYPE.3)	EA	1
JB 118B.4	UTILITIES CROSSING THROUGH FLOOD WALL/GATES ON SHEET PILES (TYPE.4)	EA	1
JB 118B.5	UTILITIES CROSSING THROUGH FLOOD WALL/GATES ON SHEET PILES (TYPE.5)	EA	1
JB 118C.1	UTILITIES CROSSING THROUGH FLOOD WALL/GATES ON VARIOUS TYPES OF INDIVIDUAL PILES (TYPE .1)	EA	1
JB 118C.2	UTILITIES CROSSING THROUGH FLOOD WALL/GATES ON VARIOUS TYPES OF INDIVIDUAL PILES (TYPE .2)	EA	3

JOINT BID WORKSHEET

ENGINEER'S ESTIMATE OF QUANTITY AND TYPES OF INTERFERENCE

FOR CONSOLIDATED EDISON COMPANY OF NEW YORK

SANDRESM1

EAST SIDE COASTAL RESILIENCY

BOROUGH OF MANHATTAN

JOINT BID ITEM NUMBER	DESCRIPTION	UNITS	ESTIMATED QUANTITY
JB 118C.3	UTILITIES CROSSING THROUGH FLOOD WALL/GATES ON VARIOUS TYPES OF INDIVIDUAL PILES (TYPE .3)	EA	1
JB 118C.4	UTILITIES CROSSING THROUGH FLOOD WALL/GATES ON VARIOUS TYPES OF INDIVIDUAL PILES (TYPE .4)	EA	1
JB 122	INCREMENTAL COST FOR MGP CONTAMINENT HANDLING & DISPOSAL	CY	1,090
JB 123	INSTALLATION OF A COMPOSITE CARBON FIBER SYSTEM ENCAPSULATION OF UNDERGROUND TRANSMISSION FEEDERS AND RETURN LINES	TF	2,000
JB 200	EXTRA DEPTH EXCAVATION OF CATCH BASIN CHUTE CONNECTION PIPES	LF	110
JB 225	INSTALLATION AND REMOVAL OF CATCH BASINS WITH UTILITY INTERFERENCES	EA	4
JB 226	INSTALLATION OF CATCH BASINS WITH UTILITY INTERFERENCES	EA	3
JB 300	SPECIAL CARE EXCAVATION AND BACKFILLING	CY	670
JB 301	SPECIAL CARE EXCAVATION AND BACKFILLING FOR OIL-O-STATIC PIPES	CY	3,273
JB 302	FIELD COATING OF OIL-O-STATIC FEEDER PIPES	LF	7,373
JB 303	FURNISH, DELIVER AND INSTALL TYPE 3/8 CLEAN SAND BACKFILL	CY	7,833
JB 330E.1	SUPPORT & PROTECT ELEC, GAS & STEAM FACILITIES DURING EXCAVATION OF CITY TRENCH WHEN FACILITIES LIE W/IN TRENCH LIMITS (TYPE .1)	LF	950
JB 330E.2	SUPPORT & PROTECT ELEC, GAS & STEAM FACILITIES DURING EXCAVATION OF CITY TRENCH WHEN FACILITIES LIE W/IN TRENCH LIMITS (TYPE .2)	LF	3,535
JB 330E.3	SUPPORT & PROTECT ELEC, GAS & STEAM FACILITIES DURING EXCAVATION OF CITY TRENCH WHEN FACILITIES LIE W/IN TRENCH LIMITS (TYPE .3)	LF	1,500
JB 330E.4	SUPPORT & PROTECT ELEC, GAS & STEAM FACILITIES DURING EXCAVATION OF CITY TRENCH WHEN FACILITIES LIE W/IN TRENCH LIMITS (TYPE .4)	LF	125
JB 400	TEST PITS FOR UTILITY FACILITIES	CY	330
JB 400A	SURVEYED AND DRAFTED TEST PITS FOR UTILITY FACILITIES	CY	420

□

JOINT BID WORKSHEET

ENGINEER'S ESTIMATE OF QUANTITY AND TYPES OF INTERFERENCE

FOR CONSOLIDATED EDISON COMPANY OF NEW YORK

SANDRESM1

EAST SIDE COASTAL RESILIENCY

BOROUGH OF MANHATTAN

JOINT BID ITEM NUMBER	DESCRIPTION	UNITS	ESTIMATED QUANTITY
JB 401	TRENCH EXCAVATION FOR ADJUSTMENT OF UTILITIES	CY	9,447
JB 402.1	EXISTING OCCUPIED CONCRETE ENCASED CONDUITS PLACED IN FINAL POSITION W/O CONCRETE ENCASEMENT	LF	800
JB 402.1A	EXISTING OCCUPIED CONCRETE ENCASED CONDUITS PLACED IN FINAL POSITION WITH CONCRETE ENCASEMENT	LF	1,600
JB 402.2	EXISTING OCCUPIED NON-CONCRETE ENCASED CONDUITS PLACED IN FINAL POSITION W/O CONCRETE ENCASEMENT	LF	1,880
JB 402.2A	EXISTING OCCUPIED NON-CONCRETE ENCASED CONDUITS PLACED IN FINAL POSITION WITH CONCRETE ENCASEMENT	LF	9,194
JB 402B.1A	EXISTING TRANSMISSION FACILITY UP TO AND INCLUDING 6" NOMINAL PIPE SIZE, ADJUSTED 0" UP TO AND INCLUDING 6" IN ANY DIRECTION, TO FINAL	LF	9,115
JB 402B.1B	EXISTING TRANSMISSION FACILITY GREATER THAN 6" NOMINAL PIPE SIZE UP TO AND INCLUDING 12" NOMINAL PIPE SIZE, ADJUSTED 0" UP TO AND	LF	8,518
JB 402B.2A	EXISTING TRANSMISSION FACILITY UP TO AND INCLUDING 6" NOMINAL PIPE SIZE, ADJUSTED GREATER THAN 6" UP TO AND INCLUDING 9" IN ANY	LF	8,661
JB 402B.2B	EXISTING TRANSMISSION FACILITY GREATER THAN 6" NOMINAL PIPE SIZE UP TO AND INCLUDING 12" NOMINAL PIPE SIZE, ADJUSTED GREATER THAN 6"	LF	13,733
JB 402B.3A	EXISTING TRANSMISSION FACILITY UP TO AND INCLUDING 6" NOMINAL PIPE SIZE, ADJUSTED GREATER THAN 9" UP TO AND INCLUDING 12" IN ANY	LF	5,031
JB 402B.3B	EXISTING TRANSMISSION FACILITY GREATER THAN 6" NOMINAL PIPE SIZE TO AND INCLUDING 12" NOMINAL PIPE SIZE, ADJUSTED GREATER THAN 9" UP	LF	8,717
JB 403	PLACING STEEL PROTECTION PLATES FOR UTILITY FACILITIES	SF	4,000
JB 404	PIER AND/OR PLATE METHOD OF PROTECTION FOR DUCTILE IRON WATER MAIN WITH LESS THAN 24" COVER	SF	100
JB 404A	PERMANENT SUPPORT REQUIREMENTS OF CRITICAL UTILITY FACILITIES IN AREAS OF SIGNIFICANT SETTLEMENT	FS	1
JB 405.1	EXCAVATION FOR INSTALLATION OF UTILITY FACILITIES WITH TOTAL DEPTHS LESS THAN 5 FEET	CY	1,396
JB 405.2	EXCAVATION FOR INSTALLATION OF UTILITY FACILITIES WITH TOTAL DEPTHS EQUAL OR GREATER THAN 5 FEET	CY	1,050
JB 405A	TRENCH EXCAVATION FOR CARBON FIBER WRAPPING EXISTING UTILITY FACILITIES	CY	9,334

□□□□□□□□□□0□□

□□□□□□□□□□□□□□□□0□0□

□□□□□□

□

JOINT BID WORKSHEET

ENGINEER'S ESTIMATE OF QUANTITY AND TYPES OF INTERFERENCE

FOR CONSOLIDATED EDISON COMPANY OF NEW YORK

SANDRESM1

EAST SIDE COASTAL RESILIENCY

BOROUGH OF MANHATTAN

JOINT BID ITEM NUMBER	DESCRIPTION	UNITS	ESTIMATED QUANTITY
JB 406	EXCAVATION FOR UTILITY STRUCTURE	CY	906
JB 410.1	MASS EXCAVATION (VOLUME UP TO AND INCLUDING 20%) FROM TOP OF ROADWAY LESS THAN 5 FT DEEP	CY	940
JB 410.2	MASS EXCAVATION (VOLUME OVER 20% UP TO AND INCLUDING 40%) FROM TOP OF ROADWAY LESS THAN 5 FT DEEP	CY	1,720
JB 450.1	CONSTRUCTION FIELD SUPPORT REQUIRING AVERAGE SIZE SURVEY CREW PERFORMING TYPICAL SURVEY FUNCTIONS (TYPE .1)	CRHRS	428
JB 450.2	CONSTRUCTION FIELD SUPPORT REQUIRING AVERAGE SMALL SIZE CREW CAPABLE OF PERFORMING VARIOUS TASKS (TYPE .2)	CRHRS	2,410
JB 450.3	CONSTRUCTION FIELD SUPPORT REQUIRING AVERAGE MEDIUM SIZE CREW CAPABLE OF PERFORMING VARIOUS TASKS (TYPE .3)	CRHRS	3,710
JB 500	REMOVAL OF ABANDONED UTILITY CONDUITS (NON-CONCRETE ENCASED)	LF	10,458
JB 501	REMOVAL OF ABANDONED MASONRY FOR ELEC. AND TEL. FACILITIES	CY	85
JB 603E.1	INSTALL UTILITY CONDUITS PLACED IN FINAL POSITION WITHOUT CONCRETE ENCASEMENT	LF	5,100
JB 603E.2	INSTALL UTILITY CONDUITS PLACED IN FINAL POSITION WITH CONCRETE ENCASEMENT	LF	8,300
JB 610.3	INSTALLATION OF STEEL GAS PIPE - 3" DIAMETER	LF	528
JB 610.8	INSTALLATION OF STEEL GAS PIPE - 8" DIAMETER	LF	743
JB 610.12	INSTALLATION OF STEEL GAS PIPE - 12" DIAMETER	LF	407
JB 610.24	INSTALLATION OF STEEL GAS PIPE - 24" DIAMETER	LF	176
JB 611.3	INSTALLATION OF STEEL GAS PIPE FITTING - 3" DIAMETER	EA	23
JB 611.8	INSTALLATION OF STEEL GAS PIPE FITTING - 8" DIAMETER	EA	21
JB 611.12	INSTALLATION OF STEEL GAS PIPE FITTING - 12" DIAMETER	EA	8

JOINT BID WORKSHEET

ENGINEER'S ESTIMATE OF QUANTITY AND TYPES OF INTERFERENCE

FOR CONSOLIDATED EDISON COMPANY OF NEW YORK

SANDRESM1

EAST SIDE COASTAL RESILIENCY

BOROUGH OF MANHATTAN

JOINT BID ITEM NUMBER	DESCRIPTION	UNITS	ESTIMATED QUANTITY
JB 611.24	INSTALLATION OF STEEL GAS PIPE FITTING - 24" DIAMETER	EA	7
JB 615.3	INSTALLATION OF PLASTIC GAS PIPE - 3" DIAMETER	LF	116
JB 615.8	INSTALLATION OF PLASTIC GAS PIPE - 8" DIAMETER	LF	286
JB 615.12	INSTALLATION OF PLASTIC GAS PIPE - 12" DIAMETER	LF	187
JB 616.3	INSTALLATION OF PLASTIC GAS PIPE FITTING - 3" DIAMETER	EA	7
JB 616.8	INSTALLATION OF PLASTIC GAS PIPE FITTING - 8" DIAMETER	EA	6
JB 616.12	INSTALLATION OF PLASTIC GAS PIPE FITTING - 12" DIAMETER	EA	12
JB 620.12	INSTALLATION OF STEAM PIPE - 24" DIAMETER	LF	418
JB 621.12	INSTALLATION OF STEAM PIPE FITTING - 24" DIAMETER	EA	20
JB 622.36	FURNISHING, DELIVERING AND INSTALLING 36-INCH STRAIGHT STEEL STEAM CASING PIPE	LF	80
JB 622.48	FURNISHING, DELIVERING AND INSTALLING 48-INCH STRAIGHT STEEL STEAM CASING PIPE	LF	80
JB 625D	INSTALLATION OF VALVE ASSEMBLY	EA	1
JB 625E	INSTALLATION OF STEAM ANCHOR	EA	4
JB 625F	INSTALLATION OF STEAM MANHOLE	EA	1
JB 636 EA	ADJUSTMENT OF UTILITY HARDWARE (UNDER 7" WIDTH)	EA	10
JB 636 EB	ADJUSTMENT OF UTILITY HARDWARE (7" TO UNDER 14" WIDTH)	EA	8
JB 636 EC	ADJUSTMENT OF UTILITY HARDWARE (14" TO UNDER 30" WIDTH)	EA	6

JOINT BID WORKSHEET

ENGINEER'S ESTIMATE OF QUANTITY AND TYPES OF INTERFERENCE

FOR CONSOLIDATED EDISON COMPANY OF NEW YORK

SANDRESM1

EAST SIDE COASTAL RESILIENCY

BOROUGH OF MANHATTAN

JOINT BID ITEM NUMBER	DESCRIPTION	UNITS	ESTIMATED QUANTITY
JB 636 ED	ADJUSTMENT OF UTILITY HARDWARE (30" TO UNDER 34" WIDTH)	EA	27
JB 636 EE	ADJUSTMENT OF UTILITY HARDWARE (34" TO UNDER 41" WIDTH)	EA	10
JB 636 EG	ADJUSTMENT OF UTILITY HARDWARE (41" TO UNDER 75" WIDTH)	EA	10
JB 636 EH	ADJUSTMENT OF UTILITY HARDWARE (75" TO UNDER 125" WIDTH)	EA	9
JB 636 EI	ADJUSTMENT OF UTILITY HARDWARE (125" TO UNDER 170" WIDTH)	EA	9
JB 636 MD	MODIFICATION OF WORK METHODS TO ACCOMMODATE UTILITY HARDWARE (30" TO UNDER 34" WIDTH)	EA	10
JB 636 ME	MODIFICATION OF WORK METHODS TO ACCOMMODATE UTILITY HARDWARE (34" TO UNDER 41" WIDTH)	EA	10
JB 636 MG	MODIFICATION OF WORK METHODS TO ACCOMMODATE UTILITY HARDWARE (41" TO UNDER 75" WIDTH)	EA	10
JB 636 R	REPAIR TO UTILITY STRUCTURES	CY	180
JB 636 SA	ADJUSTMENT OF UTILITY STEAM HARDWARE (CONCRETE COLLARS)	SF	500
JB 638 N	INSTALLATION OF FIELD CONSTRUCTED UTILITY STRUCTURE	CY	305
JB 638 R	BREAK OUT AND REMOVE UTILITY STRUCTURE	CY	670
JB 700	SPECIAL MODIFICATION OF WORK METHODS TO ACCOMMODATE/PROTECT UNDERGROUND FACILITIES WITH LIMITED COVER	CY	180
JB 710.1	REMOVAL OF ABANDONED UTILITY STEEL/CAST IRON/PLASTIC, UP TO AND INCL. 12" DIAMETER PIPES	LF	1,675
JB 710.3	REMOVAL OF ABANDONED UTILITY STEEL/CAST IRON/PLASTIC, OVER 20" DIAMETER PIPES	LF	200
JB 711	USE SHEETING LINE AS FORM	LF	3,293
JB 800	MODIFICATION OF CONCRETE YOKE TROLLEY STRUCTURES REMOVAL WHEN CROSSING UTILITY FACILITIES	LF	150

JOINT BID WORKSHEET

ENGINEER'S ESTIMATE OF QUANTITY AND TYPES OF INTERFERENCE

FOR CONSOLIDATED EDISON COMPANY OF NEW YORK

SANDRESM1

EAST SIDE COASTAL RESILIENCY

BOROUGH OF MANHATTAN

JOINT BID ITEM NUMBER	DESCRIPTION	UNITS	ESTIMATED QUANTITY
JB 801	MODIFICATION OF CONCRETE YOKE TROLLEY STRUCTURES REMOVAL PARALLEL TO UTILITY FACILITIES	LF	300
JB 803.1	LINE CUT BY PNEUMATIC TOOLS IN LIEU OF SAW CUT ASSOCIATED WITH RDWY REMOVAL (LINE CUT ASPHALT ROADWAY)	LF	300
JB 803.2	LINE CUT BY PNEUMATIC TOOLS IN LIEU OF SAW CUT ASSOCIATED WITH RDWY REMOVAL (LINE CUT ASPHALT AND CONCRETE ROADWAY)	LF	5,400
JB 803.3	LINE CUT BY PNEUMATIC TOOLS IN LIEU OF SAW CUT ASSOCIATED WITH RDWY REMOVAL (LINE CUT ASPHALT, CONCRETE, AND BELGIUM BLOCK)	LF	800
JB 850	INSTALLATION OF RUBBER SHEETS FOR UTILITY FACILITIES	SF	2,750
JB 900	EXTRA UTILITY WORK COSTS ALLOWANCE	FS	1
JB 1006V	6" VERTICAL OR ROLLED WATER MAIN OFFSET	EA	4
JB 1008V	8" VERTICAL OR ROLLED WATER MAIN OFFSET	EA	2
JB 1012V	12" VERTICAL OR ROLLED WATER MAIN OFFSET	EA	3

CON EDISON JOINT BIDDING SCOPE OF WORK
SUPPORT AND PROTECTION
SANDRESM1
EAST SIDE COASTAL RESILIENCY
BOROUGH OF MANHATTAN

JB 100.1	**UTILITIES CROSSING TRENCH FOR CATCH BASIN CHUTE CONNECT. AND/OR TESTPIT (TYPE .1)**	**EA**

At the following locations:

As Encountered
As Encountered

Total Quantity for JB 100.1 = 10

JB 100.2	**UTILITIES CROSSING TRENCH FOR CATCH BASIN CHUTE CONNECT. AND/OR TESTPIT (TYPE .2)**	**EA**

At the following locations:

As Encountered

Total Quantity for JB 100.2 = 5

JB 100.3	**UTILITIES CROSSING TRENCH FOR CATCH BASIN CHUTE CONNECT. AND/OR TESTPIT (TYPE .3)**	**EA**

At the following locations:

As Encountered

Total Quantity for JB 100.3 = 3

JB 101.1	**UTILITIES CROSSING TRENCH FOR SEWERS UP TO AND INCL. 24" DIAMETER (TYPE .1)**	**EA**

At the following locations:

As Encountered

Total Quantity for JB 101.1 = 3

JB 101.2	**UTILITIES CROSSING TRENCH FOR SEWERS UP TO AND INCL. 24" DIAMETER (TYPE .2)**	**EA**

At the following locations:

As Encountered

Total Quantity for JB 101.2 = 2

JB 101.3	**UTILITIES CROSSING TRENCH FOR SEWERS UP TO AND INCL. 24" DIAMETER (TYPE .3)**	**EA**

At the following locations:

As Encountered

Total Quantity for JB 101.3 = 8

CON EDISON JOINT BIDDING SCOPE OF WORK
SUPPORT AND PROTECTION
SANDRESM1
EAST SIDE COASTAL RESILIENCY
BOROUGH OF MANHATTAN

JB 102.1	**UTILITIES CROSSING TRENCH FOR SEWERS OVER 24" TO 36" DIAMETER (TYPE .1)**	**EA**
	At the following locations:	
	As Encountered	
	Total Quantity for JB 102.1 = 1	
JB 102.2	**UTILITIES CROSSING TRENCH FOR SEWERS OVER 24" TO 36" DIAMETER (TYPE .2)**	**EA**
	At the following locations:	
	As Encountered	
	Total Quantity for JB 102.2 = 3	
JB 103.1	**UTILITIES CROSSING TRENCH FOR SEWERS OVER 36" TO 48" DIAMETER (TYPE .1)**	**EA**
	At the following locations:	
	As Encountered	
	Total Quantity for JB 103.1 = 3	
JB 103.2	**UTILITIES CROSSING TRENCH FOR SEWERS OVER 36" TO 48" DIAMETER (TYPE .2)**	**EA**
	At the following locations:	
	As Encountered	
	Total Quantity for JB 103.2 = 10	
JB 103.3	**UTILITIES CROSSING TRENCH FOR SEWERS OVER 36" TO 48" DIAMETER (TYPE .3)**	**EA**
	At the following locations:	
	As Encountered	
	Total Quantity for JB 103.3 = 6	
JB 105.2	**UTILITIES CROSSING TRENCH FOR SEWERS OVER 54" TO 60" DIAMETER (TYPE .2)**	**EA**
	At the following locations:	
	As Encountered	
	Total Quantity for JB 105.2 = 1	

CON EDISON JOINT BIDDING SCOPE OF WORK
SUPPORT AND PROTECTION
SANDRESM1
EAST SIDE COASTAL RESILIENCY
BOROUGH OF MANHATTAN

JB 105.3	**UTILITIES CROSSING TRENCH FOR SEWERS OVER 54" TO 60" DIAMETER (TYPE .3)**	**EA**
	At the following locations:	
	As Encountered	
	Total Quantity for JB 105.3 = 2	
JB 106.2	**UTILITIES CROSSING TRENCH FOR SEWERS OVER 60" TO 72" DIAMETER (TYPE .2)**	**EA**
	At the following locations:	
	As Encountered	
	Total Quantity for JB 106.2 = 1	
JB 106.3	**UTILITIES CROSSING TRENCH FOR SEWERS OVER 60" TO 72" DIAMETER (TYPE .3)**	**EA**
	At the following locations:	
	As Encountered	
	Total Quantity for JB 106.3 = 2	
JB 108.1	**UTILITIES CROSSING TRENCH FOR WATERMAIN UP TO AND INCL. 12" DIAMETER (TYPE .1)**	**EA**
	At the following locations:	
	As Encountered	
	Total Quantity for JB 108.1 = 7	
JB 108.2	**UTILITIES CROSSING TRENCH FOR WATERMAIN UP TO AND INCL. 12" DIAMETER (TYPE .2)**	**EA**
	At the following locations:	
	As Encountered	
	Total Quantity for JB 108.2 = 8	
JB 108.3	**UTILITIES CROSSING TRENCH FOR WATERMAIN UP TO AND INCL. 12" DIAMETER (TYPE .3)**	**EA**
	At the following locations:	
	As Encountered	
	Total Quantity for JB 108.3 = 13	

CON EDISON JOINT BIDDING SCOPE OF WORK
SUPPORT AND PROTECTION
SANDRESM1
EAST SIDE COASTAL RESILIENCY
BOROUGH OF MANHATTAN

JB 117B.1 **UTILITIES CROSSING SHEET PILES FOR FLOOD WALL/GATE (TYPE .1)** **EA**

At the following locations:

As Encountered

Total Quantity for JB 117B.1 = 3

JB 117B.2 **UTILITIES CROSSING SHEET PILES FOR FLOOD WALL/GATE (TYPE .2)** **EA**

At the following locations:

As Encountered

Total Quantity for JB 117B.2 = 12

JB 117B.3 **UTILITIES CROSSING SHEET PILES FOR FLOOD WALL/GATE (TYPE .3)** **EA**

At the following locations:

As Encountered

Total Quantity for JB 117B.3 = 1

JB 117B.4 **UTILITIES CROSSING SHEET PILES FOR FLOOD WALL/GATE (TYPE .4)** **EA**

At the following locations:

As Encountered

Total Quantity for JB 117B.4 = 3

JB 117B.5 **UTILITIES CROSSING SHEET PILES FOR FLOOD WALL/GATE (TYPE .5)** **EA**

At the following locations:

As Encountered

Total Quantity for JB 117B.5 = 1

JB 117C.1 **UTILITIES CROSSING VARIOUS TYPES OF INDIVIDUAL PILES FOR FLOOD WALL/GATE (TYPE .1)** **EA**

At the following locations:

As Encountered

Total Quantity for JB 117C.1 = 13

CON EDISON JOINT BIDDING SCOPE OF WORK
SUPPORT AND PROTECTION
SANDRESM1
EAST SIDE COASTAL RESILIENCY
BOROUGH OF MANHATTAN

JB 117C.2	**UTILITIES CROSSING VARIOUS TYPES OF INDIVIDUAL PILES FOR FLOOD WALL/GATE (TYPE .2)**	**EA**

At the following locations:

As Encountered

Total Quantity for JB 117C.2 = 8

JB 117C.3	**UTILITIES CROSSING VARIOUS TYPES OF INDIVIDUAL PILES FOR FLOOD WALL/GATE (TYPE .3)**	**EA**

At the following locations:

As Encountered

Total Quantity for JB 117C.3 = 1

JB 117C.4	**UTILITIES CROSSING VARIOUS TYPES OF INDIVIDUAL PILES FOR FLOOD WALL/GATE (TYPE .4)**	**EA**

At the following locations:

As Encountered

Total Quantity for JB 117C.4 = 1

JB 118B.1	**UTILITIES CROSSING THROUGH FLOOD WALL/GATES ON SHEET PILES (TYPE.1)**	**EA**

At the following locations:

As Encountered

Total Quantity for JB 118B.1 = 1

JB 118B.2	**UTILITIES CROSSING THROUGH FLOOD WALL/GATES ON SHEET PILES (TYPE.2)**	**EA**

At the following locations:

As Encountered

Total Quantity for JB 118B.2 = 1

JB 118B.3	**UTILITIES CROSSING THROUGH FLOOD WALL/GATES ON SHEET PILES (TYPE.3)**	**EA**

At the following locations:

As Encountered

Total Quantity for JB 118B.3 = 1

CON EDISON JOINT BIDDING SCOPE OF WORK
SUPPORT AND PROTECTION
SANDRESM1
EAST SIDE COASTAL RESILIENCY
BOROUGH OF MANHATTAN

JB 118B.4	**UTILITIES CROSSING THROUGH FLOOD WALL/GATES ON SHEET PILES (TYPE.4)**	**EA**
	At the following locations:	
	As Encountered	
	Total Quantity for JB 118B.4 = 1	
JB 118B.5	**UTILITIES CROSSING THROUGH FLOOD WALL/GATES ON SHEET PILES (TYPE.5)**	**EA**
	At the following locations:	
	As Encountered	
	Total Quantity for JB 118B.5 = 1	
JB 118C.1	**UTILITIES CROSSING THROUGH FLOOD WALL/GATES ON VARIOUS TYPES OF INDIVIDUAL PILES (TYPE .1)**	**EA**
	At the following locations:	
	As Encountered	
	Total Quantity for JB 118C.1 = 1	
JB 118C.2	**UTILITIES CROSSING THROUGH FLOOD WALL/GATES ON VARIOUS TYPES OF INDIVIDUAL PILES (TYPE .2)**	**EA**
	At the following locations:	
	As Encountered	
	Total Quantity for JB 118C.2 = 3	
JB 118C.3	**UTILITIES CROSSING THROUGH FLOOD WALL/GATES ON VARIOUS TYPES OF INDIVIDUAL PILES (TYPE .3)**	**EA**
	At the following locations:	
	As Encountered	
	Total Quantity for JB 118C.3 = 1	
JB 118C.4	**UTILITIES CROSSING THROUGH FLOOD WALL/GATES ON VARIOUS TYPES OF INDIVIDUAL PILES (TYPE .4)**	**EA**
	At the following locations:	
	As Encountered	
	Total Quantity for JB 118C.4 = 1	

CON EDISON JOINT BIDDING SCOPE OF WORK
SUPPORT AND PROTECTION
SANDRESM1
EAST SIDE COASTAL RESILIENCY
BOROUGH OF MANHATTAN

JB 122	**INCREMENTAL COST FOR MGP CONTAMINENT HANDLING & DISPOSAL**	**CY**
	At the following locations:	
	As Directed By Con Edison Representative	
	Total Quantity for JB 122 = 1,090	
JB 123	**INSTALLATION OF A COMPOSITE CARBON FIBER SYSTEM ENCAPSULATION OF UNDERGROUND TRANSMISSION FEEDERS AND RETURN LINES**	**TF**
	At the following locations:	
	As Directed By Con Edison Representative	
	Total Quantity for JB 123 = 2,000	
JB 200	**EXTRA DEPTH EXCAVATION OF CATCH BASIN CHUTE CONNECTION PIPES**	**LF**
	At the following locations:	
	As Encountered and As Directed By Con Edison Representative	
	Total Quantity for JB 200 = 110	
JB 225	**INSTALLATION AND REMOVAL OF CATCH BASINS WITH UTILITY INTERFERENCES**	**EA**
	At the following locations:	
	As Encountered	
	Total Quantity for JB 225 = 4	
JB 226	**INSTALLATION OF CATCH BASINS WITH UTILITY INTERFERENCES**	**EA**
	At the following locations:	
	As Encountered	
	Total Quantity for JB 226 = 3	
JB 300	**SPECIAL CARE EXCAVATION AND BACKFILLING**	**CY**
	At the following locations:	
	As Encountered and As Directed By Con Edison Representative	
	Total Quantity for JB 300 = 670	

CON EDISON JOINT BIDDING SCOPE OF WORK
SUPPORT AND PROTECTION
SANDRESM1
EAST SIDE COASTAL RESILIENCY
BOROUGH OF MANHATTAN

JB 301 **SPECIAL CARE EXCAVATION AND BACKFILLING FOR OIL-O-STATIC PIPES** **CY**

At the following locations:

As Encountered and As Directed By Con Edison Representative

Total Quantity for JB 301 = 3,273

JB 302 **FIELD COATING OF OIL-O-STATIC FEEDER PIPES** **LF**

At the following locations:

As Encountered and As Directed By Con Edison Representative

Total Quantity for JB 302 = 7,373

JB 303 **FURNISH, DELIVER AND INSTALL TYPE 3/8 CLEAN SAND BACKFILL** **CY**

At the following locations:

As Encountered and As Directed By Con Edison Representative

Total Quantity for JB 303 = 7,833

JB 330E.1 **SUPPORT & PROTECT ELEC, GAS & STEAM FACILITIES DURING EXCAVATION OF CITY TRENCH WHEN FACILITIES LIE W/IN TRENCH LIMITS (TYPE .1)** **LF**

At the following locations:

As Encountered

Total Quantity for JB 330E.1 = 950

JB 330E.2 **SUPPORT & PROTECT ELEC, GAS & STEAM FACILITIES DURING EXCAVATION OF CITY TRENCH WHEN FACILITIES LIE W/IN TRENCH LIMITS (TYPE .2)** **LF**

At the following locations:

As Encountered

Total Quantity for JB 330E.2 = 3,535

JB 330E.3 **SUPPORT & PROTECT ELEC, GAS & STEAM FACILITIES DURING EXCAVATION OF CITY TRENCH WHEN FACILITIES LIE W/IN TRENCH LIMITS (TYPE .3)** **LF**

At the following locations:

As Encountered

Total Quantity for JB 330E.3 = 1,500

CON EDISON JOINT BIDDING SCOPE OF WORK
SUPPORT AND PROTECTION
SANDRESM1
EAST SIDE COASTAL RESILIENCY
BOROUGH OF MANHATTAN

JB 330E.4	**SUPPORT & PROTECT ELEC, GAS & STEAM FACILITIES DURING EXCAVATION OF CITY TRENCH WHEN FACILITIES LIE W/IN TRENCH LIMITS (TYPE .4)**	**LF**
	At the following locations:	
	As Encountered	
	Total Quantity for JB 330E.4 = 125	
JB 400	**TEST PITS FOR UTILITY FACILITIES**	**CY**
	At the following locations:	
	As Encountered and As Directed By Con Edison Representative	
	Total Quantity for JB 400 = 330	
JB 400A	**SURVEYED AND DRAFTED TEST PITS FOR UTILITY FACILITIES**	**CY**
	At the following locations:	
	As Directed By Con Edison Representative	
	Total Quantity for JB 400A = 420	
JB 401	**TRENCH EXCAVATION FOR ADJUSTMENT OF UTILITIES**	**CY**
	At the following locations:	
	As Encountered and As Directed By Con Edison Representative	
	Total Quantity for JB 401 = 9,447	
JB 402.1	**EXISTING OCCUPIED CONCRETE ENCASED CONDUITS PLACED IN FINAL POSITION W/O CONCRETE ENCASEMENT**	**LF**
	At the following locations:	
	As Encountered and As Directed By Con Edison Representative	
	Total Quantity for JB 402.1 = 800	
JB 402.1A	**EXISTING OCCUPIED CONCRETE ENCASED CONDUITS PLACED IN FINAL POSITION WITH CONCRETE ENCASEMENT**	**LF**
	At the following locations:	
	As Encountered and As Directed By Con Edison Representative	
	Total Quantity for JB 402.1A = 1,600	

CON EDISON JOINT BIDDING SCOPE OF WORK
SUPPORT AND PROTECTION
SANDRESM1
EAST SIDE COASTAL RESILIENCY
BOROUGH OF MANHATTAN

JB 402.2	**EXISTING OCCUPIED NON-CONCRETE ENCASED CONDUITS PLACED IN FINAL POSITION W/O CONCRETE ENCASEMENT** *At the following locations:* As Encountered and As Directed By Con Edison Representative **Total Quantity for JB 402.2 = 1,880**	LF
JB 402.2A	**EXISTING OCCUPIED NON-CONCRETE ENCASED CONDUITS PLACED IN FINAL POSITION WITH CONCRETE ENCASEMENT** *At the following locations:* As Encountered and As Directed By Con Edison Representative **Total Quantity for JB 402.2A = 9,194**	LF
JB 402B.1A	**EXISTING TRANSMISSION FACILITY UP TO AND INCLUDING 6" NOMINAL PIPE SIZE, ADJUSTED 0" UP TO AND INCLUDING 6" IN ANY DIRECTION, TO FINAL POSITION** *At the following locations:* As Encountered and As Directed By Con Edison Representative **Total Quantity for JB 402B.1A = 9,115**	LF
JB 402B.1B	**EXISTING TRANSMISSION FACILITY GREATER THAN 6" NOMINAL PIPE SIZE UP TO AND INCLUDING 12" NOMINAL PIPE SIZE, ADJUSTED 0" UP TO AND INCLUDING 6" IN ANY DIRECTION, TO FINAL POSITION** *At the following locations:* As Encountered and As Directed By Con Edison Representative **Total Quantity for JB 402B.1B = 8,518**	LF
JB 402B.2A	**EXISTING TRANSMISSION FACILITY UP TO AND INCLUDING 6" NOMINAL PIPE SIZE, ADJUSTED GREATER THAN 6" UP TO AND INCLUDING 9" IN ANY DIRECTION, TO FINAL POSITION** *At the following locations:* As Encountered and As Directed By Con Edison Representative **Total Quantity for JB 402B.2A = 8,661**	LF

□

CON EDISON JOINT BIDDING SCOPE OF WORK
SUPPORT AND PROTECTION
SANDRESM1
EAST SIDE COASTAL RESILIENCY
BOROUGH OF MANHATTAN

JB 402B.2B	**EXISTING TRANSMISSION FACILITY GREATER THAN 6" NOMINAL PIPE SIZE UP TO AND INCLUDING 12" NOMINAL PIPE SIZE, ADJUSTED GREATER THAN 6" UP TO AND INCLUDING 9" IN ANY DIRECTION, TO FINAL POSITION** *At the following locations:* As Encountered and As Directed By Con Edison Representative **Total Quantity for JB 402B.2B = 13,733**	**LF**
JB 402B.3A	**EXISTING TRANSMISSION FACILITY UP TO AND INCLUDING 6" NOMINAL PIPE SIZE, ADJUSTED GREATER THAN 9" UP TO AND INCLUDING 12" IN ANY DIRECTION, TO FINAL POSITION** *At the following locations:* As Encountered and As Directed By Con Edison Representative **Total Quantity for JB 402B.3A = 5,031**	**LF**
JB 402B.3B	**EXISTING TRANSMISSION FACILITY GREATER THAN 6" NOMINAL PIPE SIZE TO AND INCLUDING 12" NOMINAL PIPE SIZE, ADJUSTED GREATER THAN 9" UP TO AND INCLUDING 12" IN ANY DIRECTION, TO FINAL POSITION** *At the following locations:* As Encountered and As Directed By Con Edison Representative **Total Quantity for JB 402B.3B = 8,717**	**LF**
JB 403	**PLACING STEEL PROTECTION PLATES FOR UTILITY FACILITIES** *At the following locations:* As Encountered and As Directed By Con Edison Representative **Total Quantity for JB 403 = 4,000**	**SF**
JB 404	**PIER AND/OR PLATE METHOD OF PROTECTION FOR DUCTILE IRON WATER MAIN WITH LESS THAN 24" COVER** *At the following locations:* As Encountered and As Directed By Con Edison Representative **Total Quantity for JB 404 = 100**	**SF**

□□□□□□□□□□0□□
□□□□□□□□□□□□□□□0□0□
□□□□□□

CON EDISON JOINT BIDDING SCOPE OF WORK
SUPPORT AND PROTECTION
SANDRESM1
EAST SIDE COASTAL RESILIENCY
BOROUGH OF MANHATTAN

JB 404A	**PERMANENT SUPPORT REQUIREMENTS OF CRITICAL UTILITY FACILITIES IN AREAS OF SIGNIFICANT SETTLEMENT**	**FS**
	At the following locations:	
	As Directed By A Con Edison Representative	
	Total Quantity for JB 404A = 1	
JB 405.1	**EXCAVATION FOR INSTALLATION OF UTILITY FACILITIES WITH TOTAL DEPTHS LESS THAN 5 FEET**	**CY**
	At the following locations:	
	As Encountered and As Directed By Con Edison Representative	
	Total Quantity for JB 405.1 = 1,396	
JB 405.2	**EXCAVATION FOR INSTALLATION OF UTILITY FACILITIES WITH TOTAL DEPTHS EQUAL OR GREATER THAN 5 FEET**	**CY**
	At the following locations:	
	As Encountered and As Directed By Con Edison Representative	
	Total Quantity for JB 405.2 = 1,050	
JB 405A	**TRENCH EXCAVATION FOR CARBON FIBER WRAPPING EXISTING UTILITY FACILITIES**	**CY**
	At the following locations:	
	As Directed By Con Edison Representative	
	Total Quantity for JB 405A = 9,334	
JB 406	**EXCAVATION FOR UTILITY STRUCTURE**	**CY**
	At the following locations:	
	As Encountered and As Directed By Con Edison Representative	
	Total Quantity for JB 406 = 906	
JB 410.1	**MASS EXCAVATION (VOLUME UP TO AND INCLUDING 20%) FROM TOP OF ROADWAY LESS THAN 5 FT DEEP**	**CY**
	At the following locations:	
	As Encountered and As Directed By Con Edison Representative	
	Total Quantity for JB 410.1 = 940	

CON EDISON JOINT BIDDING SCOPE OF WORK
SUPPORT AND PROTECTION
SANDRESM1
EAST SIDE COASTAL RESILIENCY
BOROUGH OF MANHATTAN

JB 410.2	**MASS EXCAVATION (VOLUME OVER 20% UP TO AND INCLUDING 40%) FROM TOP OF ROADWAY LESS THAN 5 FT DEEP**	**CY**

At the following locations:

As Encountered and As Directed By Con Edison Representative

Total Quantity for JB 410.2 = 1,720

JB 450.1	**CONSTRUCTION FIELD SUPPORT REQUIRING AVERAGE SIZE SURVEY CREW PERFORMING TYPICAL SURVEY FUNCTIONS (TYPE .1)**	**CRHRS**

At the following locations:

As Directed By Con Edison Representative

Total Quantity for JB 450.1 = 428

JB 450.2	**CONSTRUCTION FIELD SUPPORT REQUIRING AVERAGE SMALL SIZE CREW CAPABLE OF PERFORMING VARIOUS TASKS (TYPE .2)**	**CRHRS**

At the following locations:

As Directed By Con Edison Representative

Total Quantity for JB 450.2 = 2,410

JB 450.3	**CONSTRUCTION FIELD SUPPORT REQUIRING AVERAGE MEDIUM SIZE CREW CAPABLE OF PERFORMING VARIOUS TASKS (TYPE .3)**	**CRHRS**

At the following locations:

As Directed By Con Edison Representative

Total Quantity for JB 450.3 = 3,710

JB 500	**REMOVAL OF ABANDONED UTILITY CONDUITS (NON-CONCRETE ENCASED)**	**LF**

At the following locations:

As Encountered and As Directed By Con Edison Representative

Total Quantity for JB 500 = 10,458

JB 501	**REMOVAL OF ABANDONED MASONRY FOR ELEC. AND TEL. FACILITIES**	**CY**

At the following locations:

As Encountered and As Directed By Con Edison Representative

Total Quantity for JB 501 = 85

CON EDISON JOINT BIDDING SCOPE OF WORK
SUPPORT AND PROTECTION
SANDRESM1
EAST SIDE COASTAL RESILIENCY
BOROUGH OF MANHATTAN

JB 603E.1	**INSTALL UTILITY CONDUITS PLACED IN FINAL POSITION WITHOUT CONCRETE ENCASEMENT**	**LF**

At the following locations:

As Directed By Con Edison Representative

Total Quantity for JB 603E.1 = 5,100

JB 603E.2	**INSTALL UTILITY CONDUITS PLACED IN FINAL POSITION WITH CONCRETE ENCASEMENT**	**LF**

At the following locations:

As Directed By Con Edison Representative

Total Quantity for JB 603E.2 = 8,300

JB 610.3	**INSTALLATION OF STEEL GAS PIPE - 3" DIAMETER**	**LF**

At the following locations:

As Directed By Con Edison Representative

Total Quantity for JB 610.3 = 528

JB 610.8	**INSTALLATION OF STEEL GAS PIPE - 8" DIAMETER**	**LF**

At the following locations:

As Directed By Con Edison Representative

Total Quantity for JB 610.8 = 743

JB 610.12	**INSTALLATION OF STEEL GAS PIPE - 12" DIAMETER**	**LF**

At the following locations:

As Directed By Con Edison Representative

Total Quantity for JB 610.12 = 407

JB 610.24	**INSTALLATION OF STEEL GAS PIPE - 24" DIAMETER**	**LF**

At the following locations:

As Directed By Con Edison Representative

Total Quantity for JB 610.24 = 176

CON EDISON JOINT BIDDING SCOPE OF WORK
SUPPORT AND PROTECTION
SANDRESM1
EAST SIDE COASTAL RESILIENCY
BOROUGH OF MANHATTAN

JB 611.3	**INSTALLATION OF STEEL GAS PIPE FITTING - 3" DIAMETER**	**EA**
	At the following locations:	
	As Directed By Con Edison Representative	
	Total Quantity for JB 611.3 = 23	
JB 611.8	**INSTALLATION OF STEEL GAS PIPE FITTING - 8" DIAMETER**	**EA**
	At the following locations:	
	As Directed By Con Edison Representative	
	Total Quantity for JB 611.8 = 21	
JB 611.12	**INSTALLATION OF STEEL GAS PIPE FITTING - 12" DIAMETER**	**EA**
	At the following locations:	
	As Directed By Con Edison Representative	
	Total Quantity for JB 611.12 = 8	
JB 611.24	**INSTALLATION OF STEEL GAS PIPE FITTING - 24" DIAMETER**	**EA**
	At the following locations:	
	As Directed By Con Edison Representative	
	Total Quantity for JB 611.24 = 7	
JB 615.3	**INSTALLATION OF PLASTIC GAS PIPE - 3" DIAMETER**	**LF**
	At the following locations:	
	As Directed By Con Edison Representative	
	Total Quantity for JB 615.3 = 116	
JB 615.8	**INSTALLATION OF PLASTIC GAS PIPE - 8" DIAMETER**	**LF**
	At the following locations:	
	As Directed By Con Edison Representative	
	Total Quantity for JB 615.8 = 286	

CON EDISON JOINT BIDDING SCOPE OF WORK
SUPPORT AND PROTECTION
SANDRESM1
EAST SIDE COASTAL RESILIENCY
BOROUGH OF MANHATTAN

JB 615.12 **INSTALLATION OF PLASTIC GAS PIPE - 12" DIAMETER** **LF**

At the following locations:

As Directed By Con Edison Representative

Total Quantity for JB 615.12 = 187

JB 616.3 **INSTALLATION OF PLASTIC GAS PIPE FITTING - 3" DIAMETER** **EA**

At the following locations:

As Directed By Con Edison Representative

Total Quantity for JB 616.3 = 7

JB 616.8 **INSTALLATION OF PLASTIC GAS PIPE FITTING - 8" DIAMETER** **EA**

At the following locations:

As Encountered and As Directed By Con Edison Representative

Total Quantity for JB 616.8 = 6

JB 616.12 **INSTALLATION OF PLASTIC GAS PIPE FITTING - 12" DIAMETER** **EA**

At the following locations:

As Directed By Con Edison Representative

Total Quantity for JB 616.12 = 12

JB 620.12 **INSTALLATION OF STEAM PIPE - 24" DIAMETER** **LF**

At the following locations:

As Directed By A Con Edison Representative

Total Quantity for JB 620.12 = 418

JB 621.12 **INSTALLATION OF STEAM PIPE FITTING - 24" DIAMETER** **EA**

At the following locations:

As Directed By A Con Edison Representative

Total Quantity for JB 621.12 = 20

CON EDISON JOINT BIDDING SCOPE OF WORK
SUPPORT AND PROTECTION
SANDRESM1
EAST SIDE COASTAL RESILIENCY
BOROUGH OF MANHATTAN

JB 622.36	**FURNISHING, DELIVERING AND INSTALLING 36-INCH STRAIGHT STEEL STEAM CASING PIPE**	**LF**

At the following locations:

As Directed By A Con Edison Representative
As Directed By A Con Edison Representative

Total Quantity for JB 622.36 = 80

JB 622.48	**FURNISHING, DELIVERING AND INSTALLING 48-INCH STRAIGHT STEEL STEAM CASING PIPE**	**LF**

At the following locations:

As Directed By A Con Edison Representative
As Directed By A Con Edison Representative

Total Quantity for JB 622.48 = 80

JB 625D	**INSTALLATION OF VALVE ASSEMBLY**	**EA**

At the following locations:

As Directed By Con Edison Representative

Total Quantity for JB 625D = 1

JB 625E	**INSTALLATION OF STEAM ANCHOR**	**EA**

At the following locations:

As Directed By Con Edison Representative

Total Quantity for JB 625E = 4

JB 625F	**INSTALLATION OF STEAM MANHOLE**	**EA**

At the following locations:

As Directed By Con Edison Representative

Total Quantity for JB 625F = 1

JB 636 EA	**ADJUSTMENT OF UTILITY HARDWARE (UNDER 7" WIDTH)**	**EA**

At the following locations:

As Encountered

Total Quantity for JB 636 EA = 10

CON EDISON JOINT BIDDING SCOPE OF WORK
SUPPORT AND PROTECTION
SANDRESM1
EAST SIDE COASTAL RESILIENCY
BOROUGH OF MANHATTAN

JB 636 EB	**ADJUSTMENT OF UTILITY HARDWARE (7" TO UNDER 14" WIDTH)**	**EA**
	At the following locations:	
	As Encountered	
	Total Quantity for JB 636 EB = 8	
JB 636 EC	**ADJUSTMENT OF UTILITY HARDWARE (14" TO UNDER 30" WIDTH)**	**EA**
	At the following locations:	
	As Encountered	
	Total Quantity for JB 636 EC = 6	
JB 636 ED	**ADJUSTMENT OF UTILITY HARDWARE (30" TO UNDER 34" WIDTH)**	**EA**
	At the following locations:	
	As Encountered	
	Total Quantity for JB 636 ED = 27	
JB 636 EE	**ADJUSTMENT OF UTILITY HARDWARE (34" TO UNDER 41" WIDTH)**	**EA**
	At the following locations:	
	As Encountered	
	Total Quantity for JB 636 EE = 10	
JB 636 EG	**ADJUSTMENT OF UTILITY HARDWARE (41" TO UNDER 75" WIDTH)**	**EA**
	At the following locations:	
	As Encountered	
	Total Quantity for JB 636 EG = 10	
JB 636 EH	**ADJUSTMENT OF UTILITY HARDWARE (75" TO UNDER 125" WIDTH)**	**EA**
	At the following locations:	
	As Encountered	
	Total Quantity for JB 636 EH = 9	

□□□□□□□□□□0□□
□□□□□□□□□□□□□□□0□0□
□□□□0□

CON EDISON JOINT BIDDING SCOPE OF WORK
SUPPORT AND PROTECTION
SANDRESM1
EAST SIDE COASTAL RESILIENCY
BOROUGH OF MANHATTAN

JB 636 EI	**ADJUSTMENT OF UTILITY HARDWARE (125" TO UNDER 170" WIDTH)**	**EA**
	At the following locations:	
	As Encountered	
	Total Quantity for JB 636 EI = 9	
JB 636 MD	**MODIFICATION OF WORK METHODS TO ACCOMMODATE UTILITY HARDWARE (30" TO UNDER 34" WIDTH)**	**EA**
	At the following locations:	
	As Encountered	
	Total Quantity for JB 636 MD = 10	
JB 636 ME	**MODIFICATION OF WORK METHODS TO ACCOMMODATE UTILITY HARDWARE (34" TO UNDER 41" WIDTH)**	**EA**
	At the following locations:	
	As Encountered	
	Total Quantity for JB 636 ME = 10	
JB 636 MG	**MODIFICATION OF WORK METHODS TO ACCOMMODATE UTILITY HARDWARE (41" TO UNDER 75" WIDTH)**	**EA**
	At the following locations:	
	As Encountered	
	Total Quantity for JB 636 MG = 10	
JB 636 R	**REPAIR TO UTILITY STRUCTURES**	**CY**
	At the following locations:	
	As Directed By A Con Edison Representative	
	Total Quantity for JB 636 R = 180	
JB 636 SA	**ADJUSTMENT OF UTILITY STEAM HARDWARE (CONCRETE COLLARS)**	**SF**
	At the following locations:	
	As Encountered	
	Total Quantity for JB 636 SA = 500	

□□□□□□□□□□0□□
□□□□□□□□□□□□□□□0□0□
□□□□□□

CON EDISON JOINT BIDDING SCOPE OF WORK
SUPPORT AND PROTECTION
SANDRESM1
EAST SIDE COASTAL RESILIENCY
BOROUGH OF MANHATTAN

JB 638 N	**INSTALLATION OF FIELD CONSTRUCTED UTILITY STRUCTURE**	**CY**
	At the following locations:	
	As Directed By Con Edison Representative	
	Total Quantity for JB 638 N = 305	
JB 638 R	**BREAK OUT AND REMOVE UTILITY STRUCTURE**	**CY**
	At the following locations:	
	As Directed By A Con Edison Representative	
	Total Quantity for JB 638 R = 670	
JB 700	**SPECIAL MODIFICATION OF WORK METHODS TO ACCOMMODATE/PROTECT UNDERGROUND FACILITIES WITH LIMITED COVER**	**CY**
	At the following locations:	
	As Encountered and As Directed By Con Edison Representative	
	Total Quantity for JB 700 = 180	
JB 710.1	**REMOVAL OF ABANDONED UTILITY STEEL/CAST IRON/PLASTIC, UP TO AND INCL. 12" DIAMETER PIPES**	**LF**
	At the following locations:	
	As Encountered and As Directed By Con Edison Representative	
	Total Quantity for JB 710.1 = 1,675	
JB 710.3	**REMOVAL OF ABANDONED UTILITY STEEL/CAST IRON/PLASTIC, OVER 20" DIAMETER PIPES**	**LF**
	At the following locations:	
	As Encountered and As Directed By Con Edison Representative	
	Total Quantity for JB 710.3 = 200	
JB 711	**USE SHEETING LINE AS FORM**	**LF**
	At the following locations:	
	As Encountered and As Directed By Con Edison Representative	
	Total Quantity for JB 711 = 3,293	

□□□□□□□□□0□□
□□□□□□□□□□□□□□□0□0□
□□□□□□

CON EDISON JOINT BIDDING SCOPE OF WORK
SUPPORT AND PROTECTION
SANDRESM1
EAST SIDE COASTAL RESILIENCY
BOROUGH OF MANHATTAN

JB 800	**MODIFICATION OF CONCRETE YOKE TROLLEY STRUCTURES REMOVAL WHEN CROSSING UTILITY FACILITIES**	**LF**

At the following locations:

As Encountered

Total Quantity for JB 800 = 150

JB 801	**MODIFICATION OF CONCRETE YOKE TROLLEY STRUCTURES REMOVAL PARALLEL TO UTILITY FACILITIES**	**LF**

At the following locations:

As Encountered

Total Quantity for JB 801 = 300

JB 803.1	**LINE CUT BY PNEUMATIC TOOLS IN LIEU OF SAW CUT ASSOCIATED WITH RDWY REMOVAL (LINE CUT ASPHALT ROADWAY)**	**LF**

At the following locations:

As Encountered and As Directed By Con Edison Representative

Total Quantity for JB 803.1 = 300

JB 803.2	**LINE CUT BY PNEUMATIC TOOLS IN LIEU OF SAW CUT ASSOCIATED WITH RDWY REMOVAL (LINE CUT ASPHALT AND CONCRETE ROADWAY)**	**LF**

At the following locations:

As Encountered and As Directed By Con Edison Representative

Total Quantity for JB 803.2 = 5,400

JB 803.3	**LINE CUT BY PNEUMATIC TOOLS IN LIEU OF SAW CUT ASSOCIATED WITH RDWY REMOVAL (LINE CUT ASPHALT, CONCRETE, AND BELGIUM BLOCK)**	**LF**

At the following locations:

As Encountered and As Directed By Con Edison Representative

Total Quantity for JB 803.3 = 800

JB 850	**INSTALLATION OF RUBBER SHEETS FOR UTILITY FACILITIES**	**SF**

At the following locations:

As Directed By Con Edison Representative

Total Quantity for JB 850 = 2,750

□

CON EDISON JOINT BIDDING SCOPE OF WORK
SUPPORT AND PROTECTION
SANDRESM1
EAST SIDE COASTAL RESILIENCY
BOROUGH OF MANHATTAN

JB 900	**EXTRA UTILITY WORK COSTS ALLOWANCE**	**FS**
	At the following locations:	
	As Encountered	
	Total Quantity for JB 900 = 1	
JB 1006V	**6" VERTICAL OR ROLLED WATER MAIN OFFSET**	**EA**
	At the following locations:	
	As Directed By Con Edison Representative	
	Total Quantity for JB 1006V = 4	
JB 1008V	**8" VERTICAL OR ROLLED WATER MAIN OFFSET**	**EA**
	At the following locations:	
	As Directed By Con Edison Representative	
	Total Quantity for JB 1008V = 2	
JB 1012V	**12" VERTICAL OR ROLLED WATER MAIN OFFSET**	**EA**
	At the following locations:	
	As Directed By Con Edison Representative	
	Total Quantity for JB 1012V = 3	

CON EDISON CONTRACT INCLUSION ANALYSIS
CITY BID ITEMS ESTIMATED QUANTITIES
SANDRESM1
EAST SIDE COASTAL RESILIENCY
BOROUGH OF MANHATTAN

CITY BID ITEM NUMBER	DESCRIPTION	UNIT	TOTAL QUANTITY
4.01 RAG	ASPHALT MACADAM PAVEMENT, 6" THICK	SY	258
4.02 CB	ASPHALTIC CONCRETE MIXTURE	TON	983
4.04 AC (N)	CONCRETE BASE COURSE FOR PAVEMENT, 6" THICK, CLASS B-32 (NIGHT WORK)	CY	37
4.04 HC	CONCRETE BASE FOR PAVEMENT, 8" THICK (HIGH-EARLY STRENGTH)	CY	162
4.04 HD	CONCRETE BASE FOR PAVEMENT, 9" THICK (HIGH-EARLY STRENGTH)	CY	153
4.09 AD	STRAIGHT STEEL FACED CONCRETE CURB (18" DEEP)	LF	500
4.09 BD	DEPRESSED STEEL FACED CONCRETE CURB (18" DEEP)	LF	100
4.09 CD	CORNER STEEL FACED CONCRETE CURB (18" DEEP)	LF	150
4.13 AAS	4" CONCRETE SIDEWALK (UNPIGMENTED)	SF	6,500
4.13 BAS	7" CONCRETE SIDEWALK (UNPIGMENTED)	SF	1,800
4.15	TOPSOIL	CY	148
6.02 AAN	UNCLASSIFIED EXCAVATION	CY	367
6.03 AA	STRIPPING PAVEMENT SURFACE (ASPHALTIC CONCRETE)	SY	130
6.20	BROKEN STONE BALLAST	CY	300
6.25 RS	TEMPORARY SIGNS	SF	100
6.28 AA	LIGHTED TIMBER BARRICADES	LF	1,400
6.34 AD	CHAIN LINK FENCE, 8'-0" HIGH	LF	800

CON EDISON CONTRACT INCLUSION ANALYSIS
CITY BID ITEMS ESTIMATED QUANTITIES
SANDRESM1
EAST SIDE COASTAL RESILIENCY
BOROUGH OF MANHATTAN

CITY BID ITEM NUMBER	DESCRIPTION	UNIT	TOTAL QUANTITY
6.55	SAWCUTTING EXISTING PAVEMENT	LF	2,500
6.87	PLASTIC BARRELS	EA	500
7.36	PEDESTRIAN STEEL BARRICADES	LF	1,000
8.02 A	SPECIAL CARE EXCAVATION AND RESTORATION FOR SIDEWALK WORK	SF	1,000
8.02 B	SPECIAL CARE EXCAVATION AND RESTORATION FOR CURB WORK	LF	1,980
9.99	FLASHING ARROW BOARD	EA	4
70.13MN	MINI-PILES (GROUTED)	VF	7,500
70.81CB	CLEAN BACKFILL	CY	9,734
73.41AG	ADDITIONAL SELECT GRANULAR BACKFILL	CY	4,180
PK-197	FOUNDATION MATERIAL FOR CONCRETE (TRUCK MEASURED)	CY	246
PK-ESCR 749	FOUNDATION MATERIAL FOR ASPHALT (TRUCK MEASURE)	CY	43

□

CON EDISON JOINT BIDDING SCOPE OF WORK
CITY BID ITEMS FOR INCLUSION IN
SANDRESM1
EAST SIDE COASTAL RESILIENCY
BOROUGH OF MANHATTAN

4.01 RAG	**ASPHALT MACADAM PAVEMENT, 6" THICK**	**SY**
	At the following locations:	
	As Directed By A Con Edison Representative	
	Total Quantity for 4.01 RAG = 258	
4.02 CB	**ASPHALTIC CONCRETE MIXTURE**	**TON**
	At the following locations:	
	As Directed By A Con Edison Representative	
	Total Quantity for 4.02 CB = 983	
4.04 AC (N)	**CONCRETE BASE COURSE FOR PAVEMENT, 6" THICK, CLASS B-32 (NIGHT WORK)**	**CY**
	At the following locations:	
	As Directed By A Con Edison Representative	
	Total Quantity for 4.04 AC (N) = 37	
4.04 HC	**CONCRETE BASE FOR PAVEMENT, 8" THICK (HIGH-EARLY STRENGTH)**	**CY**
	At the following locations:	
	As Directed By A Con Edison Representative	
	Total Quantity for 4.04 HC = 162	
4.04 HD	**CONCRETE BASE FOR PAVEMENT, 9" THICK (HIGH-EARLY STRENGTH)**	**CY**
	At the following locations:	
	As Directed By A Con Edison Representative	
	Total Quantity for 4.04 HD = 153	
4.09 AD	**STRAIGHT STEEL FACED CONCRETE CURB (18" DEEP)**	**LF**
	At the following locations:	
	As Directed By A Con Edison Representative	
	Total Quantity for 4.09 AD = 500	

□□□□□□□□□□0□□
□□□□□□□□□□□□□□□0□0□
□□□□□□

□

CON EDISON JOINT BIDDING SCOPE OF WORK
CITY BID ITEMS FOR INCLUSION IN
SANDRESM1
EAST SIDE COASTAL RESILIENCY
BOROUGH OF MANHATTAN

4.09 BD	**DEPRESSED STEEL FACED CONCRETE CURB (18" DEEP)**	**LF**
	At the following locations:	
	As Directed By A Con Edison Representative	
	Total Quantity for 4.09 BD = 100	
4.09 CD	**CORNER STEEL FACED CONCRETE CURB (18" DEEP)**	**LF**
	At the following locations:	
	As Directed By A Con Edison Representative	
	Total Quantity for 4.09 CD = 150	
4.13 AAS	**4" CONCRETE SIDEWALK (UNPIGMENTED)**	**SF**
	At the following locations:	
	As Directed By A Con Edison Representative	
	Total Quantity for 4.13 AAS = 6,500	
4.13 BAS	**7" CONCRETE SIDEWALK (UNPIGMENTED)**	**SF**
	At the following locations:	
	As Directed By A Con Edison Representative	
	Total Quantity for 4.13 BAS = 1,800	
4.15	**TOPSOIL**	**CY**
	At the following locations:	
	As Directed By A Con Edison Representative	
	Total Quantity for 4.15 = 148	
6.02 AAN	**UNCLASSIFIED EXCAVATION**	**CY**
	At the following locations:	
	As Directed By A Con Edison Representative	
	Total Quantity for 6.02 AAN = 367	

□□□□□□□□□0□□

□□□□□□□□□□□□□□□0□0□

□□□□□□

□

CON EDISON JOINT BIDDING SCOPE OF WORK
CITY BID ITEMS FOR INCLUSION IN
SANDRESM1
EAST SIDE COASTAL RESILIENCY
BOROUGH OF MANHATTAN

6.03 AA	**STRIPPING PAVEMENT SURFACE (ASPHALTIC CONCRETE)**	**SY**
	At the following locations:	
	As Directed By A Con Edison Representative	
	Total Quantity for 6.03 AA = 130	
6.20	**BROKEN STONE BALLAST**	**CY**
	At the following locations:	
	As Directed By A Con Edison Representative	
	Total Quantity for 6.20 = 300	
6.25 RS	**TEMPORARY SIGNS**	**SF**
	At the following locations:	
	As Directed By A Con Edison Representative	
	Total Quantity for 6.25 RS = 100	
6.28 AA	**LIGHTED TIMBER BARRICADES**	**LF**
	At the following locations:	
	As Directed By A Con Edison Representative	
	Total Quantity for 6.28 AA = 1,400	
6.34 AD	**CHAIN LINK FENCE, 8'-0" HIGH**	**LF**
	At the following locations:	
	As Directed By A Con Edison Representative	
	Total Quantity for 6.34 AD = 800	
6.55	**SAWCUTTING EXISTING PAVEMENT**	**LF**
	At the following locations:	
	As Directed By A Con Edison Representative	
	Total Quantity for 6.55 = 2,500	

□□□□□□□□□0□□
□□□□□□□□□□□□□□0□0□
□□□□□□

□

CON EDISON JOINT BIDDING SCOPE OF WORK
CITY BID ITEMS FOR INCLUSION IN
SANDRESM1
EAST SIDE COASTAL RESILIENCY
BOROUGH OF MANHATTAN

6.87	**PLASTIC BARRELS**	**EA**
	At the following locations:	
	As Directed By A Con Edison Representative	
	Total Quantity for 6.87 = 500	
7.36	**PEDESTRIAN STEEL BARRICADES**	**LF**
	At the following locations:	
	As Directed By A Con Edison Representative	
	Total Quantity for 7.36 = 1,000	
8.02 A	**SPECIAL CARE EXCAVATION AND RESTORATION FOR SIDEWALK WORK**	**SF**
	At the following locations:	
	As Directed By A Con Edison Representative	
	Total Quantity for 8.02 A = 1,000	
8.02 B	**SPECIAL CARE EXCAVATION AND RESTORATION FOR CURB WORK**	**LF**
	At the following locations:	
	As Directed By A Con Edison Representative	
	Total Quantity for 8.02 B = 1,980	
9.99	**FLASHING ARROW BOARD**	**EA**
	At the following locations:	
	As Directed By A Con Edison Representative	
	Total Quantity for 9.99 = 4	
70.13MN	**MINI-PILES (GROUTED)**	**VF**
	At the following locations:	
	As Directed By A Con Edison Representative	
	Total Quantity for 70.13MN = 7,500	

□

CON EDISON JOINT BIDDING SCOPE OF WORK
CITY BID ITEMS FOR INCLUSION IN
SANDRESM1
EAST SIDE COASTAL RESILIENCY
BOROUGH OF MANHATTAN

70.81CB	**CLEAN BACKFILL**	**CY**
	At the following locations:	
	As Directed By A Con Edison Representative	
	Total Quantity for 70.81CB = 9,734	
73.41AG	**ADDITIONAL SELECT GRANULAR BACKFILL**	**CY**
	At the following locations:	
	As Directed By A Con Edison Representative	
	Total Quantity for 73.41AG = 4,180	
PK-197	**FOUNDATION MATERIAL FOR CONCRETE (TRUCK MEASURED)**	**CY**
	At the following locations:	
	As Directed By A Con Edison Representative	
	Total Quantity for PK-197 = 246	
PK-ESCR 749	**FOUNDATION MATERIAL FOR ASPHALT (TRUCK MEASURE)**	**CY**
	At the following locations:	
	As Directed By A Con Edison Representative	
	Total Quantity for PK-ESCR 749 = 43	

□□□□□□□□□□0□□
□□□□□□□□□□□□□□□0□0□
□□□□□□

□

ECS **JANUARY 2020**

SANDRESM1
INSTALLATION OF EAST COAST RESILIENCY
Borough of Manhattan
Schedule JB: Scope of Work for Joint Bid Unit Price Items

JB ITEM	DESCRIPTION	UNITS	ESTIMATED QUANTITY
JB 100.1	UTILITIES CROSSING TRENCH FOR CATCH BASIN CHUTE CONNECTION AND/OR TEST PIT (TYPE .1)	EA	1
JB 400	TEST PITS FOR UTILITY FACILITIES	CY	10
JB 401	TRENCH EXCAVATION FOR ADJUSTMENT OF UTILITY FACILITIES	CY	67
JB 402T.1A	EXISTING CONCRETE ENCASED NON-STEEL/IRON TELECOMMUNICATIONS CONDUITS PLACED IN FINAL POSITION WITH CONCRETE ENCASEMENT	LF	80
JB 402T.2A	EXISTING NON-CONCRETE ENCASED NON-STEEL/IRON TELECOMMUNICATIONS CONDUITS PLACED IN FINAL POSITION WITH CONCRETE ENCASEMENT	LF	40
JB 402T.R2A	EXISTING NON-CONCRETE ENCASED STEEL/IRON TELECOMMUNICATIONS CONDUITS PLACED IN FINAL POSITION WITH CONCRETE ENCASEMENT	LF	40
JB 402T.V1A	EXISTING VACANT CONCRETE ENCASED TELECOMMUNICATION CONDUITS PLACED IN FINAL POSITION WITH CONCRETE ENCASEMENT	LF	40
JB 402T.V2A	EXISTING VACANT NON-CONCRETE ENCASED TELECOMMUNICATION CONDUITS PLACED IN FINAL POSITION WITH CONCRETE ENCASEMENT	LF	40
JB 450.5	CONSTRUCTION FIELD SUPPORT - PIPE RIPPING (TYPE .5)	Critrs	16
JB 500	REMOVAL OF ABANDONED UTILITY CONDUITS (NON-CONCRETE ENCASED)	LF	50
JB 501	REMOVAL OF ABANDONED MASONRY FOR UTILITY FACILITIES	CY	5
JB 636 EE RD	ADJUSTMENT OF UTILITY HARDWARE (34" TO UNDER 41" WIDTH) IN ROADWAY	EA	2
JB 700	SPECIAL MODIFICATION OF WORK METHODS TO ACCOMMODATE/PROTECT UNDERGOUND FACILITIES WITH LIMITED COVER	CY	30
JB 900	EXTRA UTILITY WORK COSTS ALLOWANCE	LS	1

□□□□□□□□□□0□□

□□□□□□□□□□□□□□□0□0□ □□□□□□□

□

ECS **JANUARY 2020**

SANDRESM1
INSTALLATION OF EAST COAST RESILIENCY
Borough of Manhattan
Schedule JB: Scope of Work for Joint Bid Unit Price Items

JB 100.1

UTILITIES CROSSING TRENCH FOR CATCH BASIN CHUTE CONNECTION AND/OR TEST PIT (TYPE .1)

@ THE FOLLOWING LOCATIONS

	QTY(EA)
SWC OF INTERSECTION OF MONTGOMERY STREET & SOUTH STREET	1
JB 100.1 TOTAL	**1**

JB 400

TEST PITS FOR UTILITY FACILITIES

	QTY(CY)
AS ENCOUNTERED & DIRECTED BY THE ECS FIELD REPRESENTATIVE	10
JB 400 TOTAL	**10**

JB 401

TRENCH EXCAVATION FOR ADJUSTMENT OF UTILITY FACILITIES

@ THE FOLLOWING LOCATIONS

	QTY(CY)
NWC OF INTERSECTION OF MONTGOMERY STREET & SOUTH STREET	23
NWC OF INTERSECTION OF MONTGOMERY STREET & SOUTH STREET	14
SEC OF INTERSECTION OF JACKSON STREET & FRANKLIN D ROOSEVELT DRIVE	30
JB 401 TOTAL	**67**

JB 402T.1A

EXISTING CONCRETE ENCASED NON-STEEL/IRON TELECOMMUNICATIONS CONDUITS PLACED IN FINAL POSITION WITH CONCRETE ENCASEMENT

@ THE FOLLOWING LOCATIONS

	QTY(LF)
SEC OF INTERSECTION OF JACKSON STREET & FRANKLIN D ROOSEVELT DRIVE	80
JB 402T.1A TOTAL	**80**

JB 402T.2A

EXISTING NON-CONCRETE ENCASED NON-STEEL/IRON TELECOMMUNICATIONS CONDUITS PLACED IN FINAL POSITION WITH CONCRETE ENCASEMENT

@ THE FOLLOWING LOCATIONS

	QTY(LF)
NWC OF INTERSECTION OF MONTGOMERY STREET & SOUTH STREET	40
JB 402T.2A TOTAL	**40**

□□□□□□□□□□0□□

□□□□□□□□□□□□□□□0□0□ □□□□□□

□

ECS **JANUARY 2020**

SANDRESM1
INSTALLATION OF EAST COAST RESILIENCY
Borough of Manhattan
Schedule JB: Scope of Work for Joint Bid Unit Price Items

JB 402T.R2A
EXISTING NON-CONCRETE ENCASED STEEL/IRON TELECOMMUNICATIONS CONDUITS PLACED IN FINAL POSITION WITH CONCRETE ENCASEMENT
@ THE FOLLOWING LOCATIONS

	QTY(LF)
NWC OF INTERSECTION OF MONTGOMERY STREET & SOUTH STREET	40
JB 402T.R2A TOTAL	**40**

JB 402T.V1A
EXISTING VACANT CONCRETE ENCASED TELECOMMUNICATION CONDUITS PLACED IN FINAL POSITION WITH CONCRETE ENCASEMENT
@ THE FOLLOWING LOCATIONS

	QTY(LF)
SEC OF INTERSECTION OF JACKSON STREET & FRANKLIN D ROOSEVELT DRIVE	40
JB 402T.V1A TOTAL	**40**

JB 402T.V2A
EXISTING VACANT NON-CONCRETE ENCASED TELECOMMUNICATION CONDUITS PLACED IN FINAL POSITION WITH CONCRETE ENCASEMENT
@ THE FOLLOWING LOCATIONS

	QTY(LF)
NWC OF INTERSECTION OF MONTGOMERY STREET & SOUTH STREET	40
JB 402T.V2A TOTAL	**40**

JB 450.5
CONSTRUCTION FIELD SUPPORT - PIPE RIPPING (TYPE .5)
@ THE FOLLOWING LOCATIONS

	QTY(CrHrs)
NWC OF INTERSECTION OF MONTGOMERY STREET & SOUTH STREET	16
JB 450.5 TOTAL	**16**

JB 500
REMOVAL OF ABANDONED UTILITY CONDUITS (NON-CONCRETE ENCASED)
@ THE FOLLOWING LOCATIONS

	QTY(LF)
SEC OF INTERSECTION OF MONTGOMERY STREET & MARGINAL STREET	50
JB 500 TOTAL	**50**

JB 501
REMOVAL OF ABANDONED MASONRY FOR UTILITY FACILITIES
@ THE FOLLOWING LOCATIONS

	QTY(CY)
SEC OF INTERSECTION OF MONTGOMERY STREET & MARGINAL STREET	5
JB 501 TOTAL	**5**

□

ECS **JANUARY 2020**

SANDRESM1
INSTALLATION OF EAST COAST RESILIENCY
Borough of Manhattan
Schedule JB: Scope of Work for Joint Bid Unit Price Items

JB 636 EE RD

ADJUSTMENT OF UTILITY HARDWARE (34" TO UNDER 41" WIDTH) IN ROADWAY

@ THE FOLLOWING LOCATIONS

	QTY(EA)
NWC OF INTERSECTION OF MONTGOMERY STREET & MARGINAL STREET	1
SWC OF INTERSECTION OF MONTGOMERY STREET & SOUTH STREET	1
JB 636 EE RD TOTAL	**2**

JB 700

SPECIAL MODIFICATION OF WORK METHODS TO ACCOMMODATE/PROTECT UNDERGOUND FACILITIES WITH LIMITED COVER

@ THE FOLLOWING LOCATIONS

	QTY(CY)
SWC OF INTERSECTION OF MONTGOMERY STREET & MARGINAL STREET	30
JB 700 TOTAL	**30**

JB 900

EXTRA UTILITY WORK COSTS ALLOWANCE

@ THE FOLLOWING LOCATIONS

	QTY(LS)
AS ENCOUNTERED & DIRECTED BY THE ECS FIELD REPRESENTATIVE	1
JB 900 TOTAL	**1**

□□□□□□□□□□0□□

□□□□□□□□□□□□□□□0□0□ □□□□□□

□

ECS **JANUARY 2020**

SANDRESM1
INSTALLATION OF EAST COAST RESILIENCY
Borough of Manhattan
Bid Item Accomodation Estimate

ITEM	DESCRIPTION	UNITS	ESTIMATED QUANTITY
4.02 AB-R	ASPHALTIC CONCRETE WEARING COURSE, 1-1/2" THICK	QTY(SY)	60
4.02 CB	ASPHALTIC CONCRETE MIXTURE	QTY(TON)	21
4.04 H	CONCRETE BASE FOR PAVEMENT 9", VARIABLE THICKNESS, FOR TRENCH RESTORATION (HIGH EARLY STRENGTH)	QTY(CY)	16
6.55	SAWCUTTING EXISTING PAVEMENT	QTY(LF)	266

□

ECS **JANUARY 2020**

SANDRESM1
INSTALLATION OF EAST COAST RESILIENCY
Borough of Manhattan
Bid Item Accommodation Scope

4.02 AB-R
ASPHALTIC CONCRETE WEARING COURSE, 1-1/2" THICK
@ THE FOLLOWING LOCATIONS

	QTY(SY)
NWC OF INTERSECTION OF MONTGOMERY STREET & SOUTH STREET	23
NWC OF INTERSECTION OF MONTGOMERY STREET & SOUTH STREET	14
SEC OF INTERSECTION OF JACKSON STREET & FRANKLIN D ROOSEVELT DRIVE	23
4.02 AB-R TOTAL	**60**

4.02 CB
ASPHALTIC CONCRETE MIXTURE
@ THE FOLLOWING LOCATIONS

	QTY(TON)
NWC OF INTERSECTION OF MONTGOMERY STREET & SOUTH STREET	8
NWC OF INTERSECTION OF MONTGOMERY STREET & SOUTH STREET	5
SEC OF INTERSECTION OF JACKSON STREET & FRANKLIN D ROOSEVELT DRIVE	8
4.02 CB TOTAL	**21**

4.04 H
CONCRETE BASE FOR PAVEMENT 9", VARIABLE THICKNESS, FOR TRENCH RESTORATION (HIGH EARLY STRENGTH)
@ THE FOLLOWING LOCATIONS

	QTY(CY)
NWC OF INTERSECTION OF MONTGOMERY STREET & SOUTH STREET	6
NWC OF INTERSECTION OF MONTGOMERY STREET & SOUTH STREET	4
SEC OF INTERSECTION OF JACKSON STREET & FRANKLIN D ROOSEVELT DRIVE	6
4.04 H TOTAL	**16**

6.55
SAWCUTTING EXISTING PAVEMENT
@ THE FOLLOWING LOCATIONS

	QTY(LF)
NWC OF INTERSECTION OF MONTGOMERY STREET & SOUTH STREET	90
NWC OF INTERSECTION OF MONTGOMERY STREET & SOUTH STREET	86
SEC OF INTERSECTION OF JACKSON STREET & FRANKLIN D ROOSEVELT DRIVE	90
6.55 TOTAL	**266**

PROJECT ID: □□□□□□M□

SANDRESM1

Installation of east side coastal resiliency

BOROUGH OF MANHATTAN

ITEM	DESCRIPTION	UNITS	ESTIMATED QUANTITY
100.1	UTILITIES CROSSING TRENCH FOR CATCH BASIN CHUTE CONNECTIONS AND/OR TEST PITS (TYPE .1)	EA	1
103.1	UTILITIES CROSSING TRENCH FOR SEWERS OVER 36" TO 48" DIAMETER (TYPE .1)	EA	1
401	TRENCH EXCAVATION FOR ADJUSTMENT OF UTILITY FACILITIES	CY	156.11
402T.1A	EXISTING CONCRETE ENCASED NON-STEEL/IRON CONDUITS PLACED IN FINAL POSITION WITH CONCRETE ENCASEMENT	LF	220
638 EE	ADJUSTMENT OF UTILITY HARDWARE (34" TO UNDER 41" WIDTH)	EA	2
900	EXTRA UTILITY WORK COSTS ALLOWANCE	LS	1

□□□□□□□

□0/0□□□□□□□

□

ALTICE **JANUARY 2020**

SANDRESM1
INSTALLATION OF EAST SIDE COASTAL RESILIENCY

Borough of Manhattan
Schedule JB: Scope of Work for Joint Bid Items

JB 100.1
UTILITIES CROSSING TRENCH FOR CATCH BASIN CHUTE CONNECTIONS AND/OR TEST PITS (TYPE .1)

@ THE FOLLOWING LOCATIONS

	QTY(EA)
MONTGOMERY ST & SOUTH ST (1)	1
JB 100.1 TOTAL	**1**

JB 103.1
UTILITIES CROSSING TRENCH FOR SEWERS OVER 36" TO 48" DIAMETER (TYPE .1)

@ THE FOLLOWING LOCATIONS

	QTY(EA)
FRANKLIN D. ROOSSEVELT DRIVE & JACKSON ST (2)	1
JB 103.1 TOTAL	**1**

JB 401
TRENCH EXCAVATION FOR ADJUSTMENT OF UTILITY FACILITIES

AS DIRECTED BY AN ALTICE REPRESENTATIVE @ THE FOLLOWING LOCATIONS

	QTY(CY)
MONTGOMERY ST & SOUTH ST (1)	8.33
FRANKLIN D. ROOSVELT DRIVE, FROM GOUVERNEUR SLIP WEST TO GOUVERNEUR SLIP EAST	147.78
JB 401 TOTAL	**156.11**

JB 402T.1A
EXISTING CONCRETE ENCASED NON-STEEL/IRON CONDUITS PLACED IN FINAL POSITION WITH CONCRETE ENCASEMENT

AS DIRECTED BY AN ALTICE REPRESENTATIVE @ THE FOLLOWING LOCATIONS

	QTY(LF)
MONTGOMERY ST & SOUTH ST (1)	30
FRANKLIN D. ROOSVELT DRIVE, FROM GOUVERNEUR SLIP WEST TO GOUVERNEUR SLIP EAST	190
JB 402T.1A TOTAL	**220**

JB 636EE
ADJUSTMENT OF UTILITY HARDWARE (34" TO UNDER 41" WIDTH)

AS DIRECTED BY AN ALTICE REPRESENTATIVE @ THE FOLLOWING LOCATIONS

	QTY(EA)
MONTGOMERY ST & FRANKLIN D. ROOSEVELT DRIVE (1)	1
FRANKLIN D. ROOSSEVELT DRIVE & JACKSON ST (2)	1
JB 636EE TOTAL	**2**

JB 900

EXTRA UTILITY WORK COSTS ALLOWANCE

@ THE FOLLOWING LOCATIONS

	QTY(LS)
AS ENCOUNTERED & DIRECTED BY THE ALTICE REPRESENTATIVE	1
JB 900 TOTAL	**1**

[illegible]

HUD - PAGES

U.S. DEPARTMENT OF HOUSING AND URBAN DEVELOPMENT PROJECTS

(NO TEXT ON THIS PAGE)

U.S. DEPARTMENT OF HOUSING AND URBAN DEVELOPMENT ("HUD")
FUNDING ATTACHMENT

THE CITY OF NEW YORK
DEPARTMENT OF DESIGN AND CONSTRUCTION
INFRASTRUCTURE DIVISION
BUREAU OF DESIGN

THIS ATTACHMENT IS HEREBY MADE A PART OF THE CONTRACT DOCUMENTS

1. The riders and exhibits listed below, and included in this Attachment, are made a part of this contract documents, and the Contractor shall be responsible for compliance with all the provisions contained therein:
    - UNIFORM FEDERAL CONTRACT PROVISIONS RIDER FOR FEDERALLY FUNDED PROCUREMENT CONTRACTS (1/20/2021)
    - CDBG RIDER (1/20/2021)
    - HUD EXHIBIT 3 (11/18/2016)
    - FEDERAL LABOR STANDARDS PROVISIONS (Form HUD-4010) (6/2009)
    - DAVIS-BACON WAGE RATES

(NO TEXT ON THIS PAGE)

UNIFORM FEDERAL CONTRACT PROVISIONS RIDER FOR FEDERALLY FUNDED PROCUREMENT CONTRACTS

(Version 01.20.2021)

[Instructions to Agencies: This Uniform Federal Contract Provisions Rider for Federally Funded Procurement Contracts ("Rider") must be attached to all federally funded procurement contracts (of any dollar amount) that are subject to 2 CFR Part 200 (Uniform Administrative Requirements, Cost Principles, and Audit Requirements for Federal Awards). This Rider does not apply to subrecipient or subaward agreements. Procurement contracts funded by HUD's CDBG Program, CDBG-DR Program, or by FEMA must also include the program-specific rider.]

A. *Definitions.* [illegible]

[illegible] "[illegible]" [illegible]

[illegible] "[illegible]" [illegible]

[illegible] "[illegible]" [illegible]

4. "[illegible]" [illegible]

[illegible] "[illegible]" [illegible]

6. "[illegible]" [illegible]

[illegible] "[illegible]" [illegible]

[illegible] "[illegible]" [illegible]

[illegible] "[illegible]" [illegible]

B. *Termination and Remedies for Breach of Contract.* [illegible]

[illegible] **Remedies for Breach of Contract.** [illegible]

[illegible]

Termination.

Termination for Cause

Notice to Cure.

Opportunity to be Heard.

Notice of Termination.

[illegible]

[illegible] Termination due to Force Majeure

[illegible]

[illegible]

[illegible]

[illegible]

d[illegible] Termination due to Reductions in Federal Funding

[illegible]

(2) ''Manufactured products'' [illegible]

[illegible] *Documentation of Costs.* [illegible]

[illegible] *Records Retention.* [illegible]
[illegible]

[illegible] *Records Access.* [illegible]

[illegible] *Small Firms, M/WBE Firms, and Labor Surplus Area Firms.* [illegible]

[illegible]

[illegible]

[illegible]

[illegible]

[illegible]

[illegible]

[illegible]

[illegible]

[illegible]

[illegible]

E. Rights to Inventions. [Special Provisions For Contracts Involving Experimental, Developmental, or Research Work.]

a. Definitions

"[illegible]" [illegible]

"[illegible]" [illegible]

"[illegible]" [illegible]

[illegible]

[illegible] "Modification" [illegible]

[illegible] "[illegible]" [illegible]

[illegible] "[illegible]" [illegible]

[illegible] "Statutory period" means the one [illegible]

[illegible] The "contractor" means any person, small business firm [illegible]

[illegible] *Allocation of Principal Rights* [illegible]

□□ *Invention Disclosure ,Election of Title and Filing of Patent Application by Contractor*□

□□□ □□□□□ □□r□□□r□□ □□□□d□□□□

March-in Rights

40 6

Special Provisions for Contracts with Nonprofit Organizations.

review the contractor's licensing program and decisions

Communication.

FEDERAL EXHIBIT 1

NOTICE OF REQUIREMENT FOR AFFIRMATIVE ACTION TO ENSURE EQUAL EMPLOYMENT OPPORTUNITY (EXECUTIVE ORDER 11246, as amended) FOR ALL CONSTRUCTION CONTRACTS AND SUB-CONTRACTS IN EXCESS OF $10,000.

FEDERAL EXHIBIT 2

[Insert Exhibit 2 for applicable federal grant program]

(NO TEXT ON THIS PAGE)

Applicability

The Project or Program to which the construction work covered by this contract pertains is being assisted by the United States of America and the following Federal Labor Standards Provisions are included in this Contract pursuant to the provisions applicable to such Federal assistance.

A. 1. (i) Minimum Wages. All laborers and mechanics employed or working upon the site of the work, will be paid unconditionally and not less often than once a week, and without subsequent deduction or rebate on any account (except such payroll deductions as are permitted by regulations issued by the Secretary of Labor under the Copeland Act (29 CFR Part 3), the full amount of wages and bona fide fringe benefits (or cash equivalents thereof) due at time of payment computed at rates not less than those contained in the wage determination of the Secretary of Labor which is attached hereto and made a part hereof, regardless of any contractual relationship which may be alleged to exist between the contractor and such laborers and mechanics. Contributions made or costs reasonably anticipated for bona fide fringe benefits under Section l(b)(2) of the Davis-Bacon Act on behalf of laborers or mechanics are considered wages paid to such laborers or mechanics, subject to the provisions of 29 CFR 5.5(a)(1)(iv); also, regular contributions made or costs incurred for more than a weekly period (but not less often than quarterly) under plans, funds, or programs, which cover the particular weekly period, are deemed to be constructively made or incurred during such weekly period.

Such laborers and mechanics shall be paid the appropriate wage rate and fringe benefits on the wage determination for the classification of work actually performed, without regard to skill, except as provided in 29 CFR 5.5(a)(4). Laborers or mechanics performing work in more than one classification may be compensated at the rate specified for each classification for the time actually worked therein: Provided, That the employer's payroll records accurately set forth the time spent in each classification in which work is performed. The wage determination (including any additional classification and wage rates conformed under 29 CFR 5.5(a)(1)(ii) and the Davis-Bacon poster (WH-1321) shall be posted at all times by the contractor and its subcontractors at the site of the work in a prominent and accessible, place where it can be easily seen by the workers.

(ii) (a) Any class of laborers or mechanics which is not listed in the wage determination and which is to be employed under the contract shall be classified in conformance with the wage determination. HUD shall approve an additional classification and wage rate and fringe benefits therefor only when the following criteria have been met:

(1) The work to be performed by the classification requested is not performed by a classification in the wage determination; and

(2) The classification is utilized in the area by the construction industry; and

(3) The proposed wage rate, including any bona fide fringe benefits, bears a reasonable relationship to the wage rates contained in the wage determination.

(b) If the contractor and the laborers and mechanics to be employed in the classification (if known), or their representatives, and HUD or its designee agree on the classification and wage rate (including the amount designated for fringe benefits where appropriate), a report of the action taken shall be sent by HUD or its designee to the Administrator of the Wage and Hour Division, Employment Standards Administration, U.S. Department of Labor, Washington, D.C. 20210. The Administrator, or an authorized representative, will approve, modify, or disapprove every additional classification action within 30 days of receipt and so advise HUD or its designee or will notify HUD or its designee within the 30-day period that additional time is necessary. (Approved by the Office of Management and Budget under OMB control number 1215-0140.)

(c) In the event the contractor, the laborers or mechanics to be employed in the classification or their representatives, and HUD or its designee do not agree on the proposed classification and wage rate (including the amount designated for fringe benefits, where appropriate), HUD or its designee shall refer the questions, including the views of all interested parties and the recommendation of HUD or its designee, to the Administrator for determination. The Administrator, or an authorized representative, will issue a determination within 30 days of receipt and so advise HUD or its designee or will notify HUD or its designee within the 30-day period that additional time is necessary. (Approved by the Office of Management and Budget under OMB Control Number 1215-0140.)

(d) The wage rate (including fringe benefits where appropriate) determined pursuant to subparagraphs (1)(ii)(b) or (c) of this paragraph, shall be paid to all workers performing work in the classification under this contract from the first day on which work is performed in the classification.

(iii) Whenever the minimum wage rate prescribed in the contract for a class of laborers or mechanics includes a fringe benefit which is not expressed as an hourly rate, the contractor shall either pay the benefit as stated in the wage determination or shall pay another bona fide fringe benefit or an hourly cash equivalent thereof.

(iv) If the contractor does not make payments to a trustee or other third person, the contractor may consider as part

of the wages of any laborer or mechanic the amount of any costs reasonably anticipated in providing bona fide fringe benefits under a plan or program, Provided, That the Secretary of Labor has found, upon the written request of the contractor, that the applicable standards of the Davis-Bacon Act have been met. The Secretary of Labor may require the contractor to set aside in a separate account assets for the meeting of obligations under the plan or program. (Approved by the Office of Management and Budget under OMB Control Number 1215-0140.)

2. Withholding. HUD or its designee shall upon its own action or upon written request of an authorized representative of the Department of Labor withhold or cause to be withheld from the contractor under this contract or any other Federal contract with the same prime contractor, or any other Federally-assisted contract subject to Davis-Bacon prevailing wage requirements, which is held by the same prime contractor so much of the accrued payments or advances as may be considered necessary to pay laborers and mechanics, including apprentices, trainees and helpers, employed by the contractor or any subcontractor the full amount of wages required by the contract In the event of failure to pay any laborer or mechanic, including any apprentice, trainee or helper, employed or working on the site of the work, all or part of the wages required by the contract, HUD or its designee may, after written notice to the contractor, sponsor, applicant, or owner, take such action as may be necessary to cause the suspension of any further payment, advance, or guarantee of funds until such violations have ceased. HUD or its designee may, after written notice to the contractor, disburse such amounts withheld for and on account of the contractor or subcontractor to the respective employees to whom they are due. The Comptroller General shall make such disbursements in the case of direct Davis-Bacon Act contracts.

3. (i) Payrolls and basic records. Payrolls and basic records relating thereto shall be maintained by the contractor during the course of the work preserved for a period of three years thereafter for all laborers and mechanics working at the site of the work. Such records shall contain the name, address, and social security number of each such worker, his or her correct classification, hourly rates of wages paid (including rates of contributions or costs anticipated for bona fide fringe benefits or cash equivalents thereof of the types described in Section l(b)(2)(B) of the Davis-bacon Act), daily and weekly number of hours worked, deductions made and actual wages paid. Whenever the Secretary of Labor has found under 29 CFR 5.5 (a)(1)(iv) that the wages of any laborer or mechanic include the amount of any costs reasonably anticipated in providing benefits under a plan or program described in Section l(b)(2)(B) of the Davis-Bacon Act, the contractor shall maintain records which show that the commitment to provide such benefits is enforceable, that the plan or program is financially responsible, and that the plan or program has been communicated in writing to the laborers or mechanics affected, and records which show the costs anticipated or the actual cost incurred in providing such benefits. Contractors employing apprentices or trainees under approved programs shall maintain written evidence of the registration of apprenticeship programs and certification of trainee programs, the registration of the apprentices and trainees, and the ratios and wage rates prescribed in the applicable programs. (Approved by the Office of Management and Budget under OMB Control Numbers 1215-0140 and 1215-0017.)

(ii) (a) The contractor shall submit weekly for each week in which any contract work is performed a copy of all payrolls to HUD or its designee if the agency is a party to the contract, but if the agency is not such a party, the contractor will submit the payrolls to the applicant sponsor, or owner, as the case may be, for transmission to HUD or its designee. The payrolls submitted shall set out accurately and completely all of the information required to be maintained under 29 CFR 5.5(a)(3)(i) except that full social security numbers and home addresses shall not be included on weekly transmittals. Instead the payrolls shall only need to include an individually identifying number for each employee (e.g., the last four digits of the employee's social security number). The required weekly payroll information may be submitted in any form desired. Optional Form WH-347 is available for this purpose from the Wage and Hour Division Web site at *http://www.dol.gov/esa/whd/forms/wh347instr.htm* or its successor site. The prime contractor is responsible for the submission of copies of payrolls by all subcontractors. Contractors and subcontractors shall maintain the full social security number and current address of each covered worker, and shall provide them upon request to HUD or its designee if the agency is a party to the contract, but if the agency is not such a party, the contractor will submit the payrolls to the applicant sponsor, or owner, as the case may be, for transmission to HUD or its designee, the contractor, or the Wage and Hour Division of the Department of Labor for purposes of an investigation or audit of compliance with prevailing wage requirements. It is not a violation of this subparagraph for a prime contractor to require a subcontractor to provide addresses and social security numbers to the prime contractor for its own records, without weekly submission to HUD or its designee. (Approved by the Office of Management and Budget under OMB Control Number 1215-0149.)

(b) Each payroll submitted shall be accompanied by a "Statement of Compliance," signed by the contractor or subcontractor or his or her agent who pays or supervises the payment of the persons employed under the contract and shall certify the following:

(1) That the payroll for the payroll period contains the information required to be provided under 29 CFR 5.5 (a)(3)(ii), the appropriate information is being maintained under 29 CFR 5.5(a)(3)(i), and that such information is correct and complete;

(2) That each laborer or mechanic (including each helper, apprentice, and trainee) employed on the contract during the payroll period has been paid the full weekly wages earned, without rebate, either directly or indirectly, and that no deductions have been made either directly or indirectly from the full wages earned, other than permissible deductions as set forth in 29 CFR Part 3;

(3) That each laborer or mechanic has been paid not less than the applicable wage rates and fringe benefits or cash equivalents for the classification of work performed, as specified in the applicable wage determination incorporated into the contract.

(c) The weekly submission of a properly executed certification set forth on the reverse side of Optional Form WH-347 shall satisfy the requirement for submission of the "Statement of Compliance" required by subparagraph A.3.(ii)(b).

(d) The falsification of any of the above certifications may subject the contractor or subcontractor to civil or criminal prosecution under Section 1001 of Title 18 and Section 231 of Title 31 of the United States Code.

(iii) The contractor or subcontractor shall make the records required under subparagraph A.3.(i) available for inspection, copying, or transcription by authorized representatives of HUD or its designee or the Department of Labor, and shall permit such representatives to interview employees during working hours on the job. If the contractor or subcontractor fails to submit the required records or to make them available, HUD or its designee may, after written notice to the contractor, sponsor, applicant or owner, take such action as may be necessary to cause the suspension of any further payment, advance, or guarantee of funds. Furthermore, failure to submit the required records upon request or to make such records available may be grounds for debarment action pursuant to 29 CFR 5.12.

4. Apprentices and Trainees.

(i) Apprentices. Apprentices will be permitted to work at less than the predetermined rate for the work they performed when they are employed pursuant to and individually registered in a bona fide apprenticeship program registered with the U.S. Department of Labor, Employment and Training Administration, Office of Apprenticeship Training, Employer and Labor Services, or with a State Apprenticeship Agency recognized by the Office, or if a person is employed in his or her first 90 days of probationary employment as an apprentice in such an apprenticeship program, who is not individually registered in the program, but who has been certified by the Office of Apprenticeship Training, Employer and Labor Services or a State Apprenticeship Agency (where appropriate) to be eligible for probationary employment as an apprentice. The allowable ratio of apprentices to journeymen on the job site in any craft classification shall not be greater than the ratio permitted to the contractor as to the entire work force under the registered program. Any worker listed on a payroll at an apprentice wage rate, who is not registered or otherwise employed as stated above, shall be paid not less than the applicable wage rate on the wage determination for the classification of work actually performed. In addition, any apprentice performing work on the job site in excess of the ratio permitted under the registered program shall be paid not less than the applicable wage rate on the wage determination for the work actually performed. Where a contractor is performing construction on a project in a locality other than that in which its program is registered, the ratios and wage rates (expressed in percentages of the journeyman's hourly rate) specified in the contractor's or subcontractor's registered program shall be observed. Every apprentice must be paid at not less than the rate specified in the registered program for the apprentice's level of progress, expressed as a percentage of the journeymen hourly rate specified in the applicable wage determination. Apprentices shall be paid fringe benefits in accordance with the provisions of the apprenticeship program. If the apprenticeship program does not specify fringe benefits, apprentices must be paid the full amount of fringe benefits listed on the wage determination for the applicable classification. If the Administrator determines that a different practice prevails for the applicable apprentice classification, fringes shall be paid in accordance with that determination. In the event the Office of Apprenticeship Training, Employer and Labor Services, or a State Apprenticeship Agency recognized by the Office, withdraws approval of an apprenticeship program, the contractor will no longer be permitted to utilize apprentices at less than the applicable predetermined rate for the work performed until an acceptable program is approved.

(ii) Trainees. Except as provided in 29 CFR 5.16, trainees will not be permitted to work at less than the predetermined rate for the work performed unless they are employed pursuant ',to and individually registered in a program which has received prior approval, evidenced by formal certification by the U.S. Department of Labor, Employment and Training Administration. The ratio of trainees to journeymen on the job site shall not be greater than permitted under the plan approved by the Employment and Training Administration. Every trainee must be paid at not less than the rate specified in the approved program for the trainee's level of progress, expressed as a percentage of the journeyman hourly rate specified in the applicable wage determination. Trainees shall be paid fringe benefits in accordance with the provisions of the trainee program. If the trainee program does not mention fringe benefits, trainees shall be paid the full amount of fringe benefits listed on the wage determination unless the Administrator of the Wage and Hour Division determines that there is an apprenticeship program associated with the corresponding journeyman wage rate on the wage determination which provides for less than full fringe benefits for apprentices. Any employee listed on the payroll at a trainee rate who is not registered and participating in a training plan approved by

the Employment and Training Administration shall be paid not less than the applicable wage rate on the wage determination for the work actually performed. In addition, any trainee performing work on the job site in excess of the ratio permitted under the registered program shall be paid not less than the applicable wage rate on the wage determination for the work actually performed. In the event the Employment and Training Administration withdraws approval of a training program, the contractor will no longer be permitted to utilize trainees at less than the applicable predetermined rate for the work performed until an acceptable program is approved.

(iii) Equal employment opportunity. The utilization of apprentices, trainees and journeymen under 29 CFR Part 5 shall be in conformity with the equal employment opportunity requirements of Executive Order 11246, as amended, and 29 CFR Part 30.

5. Compliance with Copeland Act requirements. The contractor shall comply with the requirements of 29 CFR Part 3 which are incorporated by reference in this contract

6. Subcontracts. The contractor or subcontractor will insert in any subcontracts the clauses contained in subparagraphs 1 through 11 in this paragraph A and such other clauses as HUD or its designee may by appropriate instructions require, and a copy of the applicable prevailing wage decision, and also a clause requiring the subcontractors to include these clauses in any lower tier subcontracts. The prime contractor shall be responsible for the compliance by any subcontractor or lower tier subcontractor with all the contract clauses in this paragraph.

7. Contract termination; debarment. A breach of the contract clauses in 29 CFR 5.5 may be grounds for termination of the contract and for debarment as a contractor and a subcontractor as provided in 29 CFR 5.12.

8. Compliance with Davis-Bacon and Related Act Requirements. All rulings and interpretations of the Davis-Bacon and Related Acts contained in 29 CFR Parts 1, 3, and 5 are herein incorporated by reference in this contract

9. Disputes concerning labor standards. Disputes arising out of the labor standards provisions of this contract shall not be subject to the general disputes clause of this contract. Such disputes shall be resolved in accordance with the procedures of the Department of Labor set forth in 29 CFR Parts 5, 6, and 7. Disputes within the meaning of this clause include disputes between the contractor (or any of its subcontractors) and HUD or its designee, the U.S. Department of Labor, or the employees or their representatives.

10. (i) Certification of Eligibility. By entering into this contract the contractor certifies that neither it (nor he or she) nor any person or firm who has an interest in the contractor's firm is a person or firm ineligible to be awarded Government contracts by virtue of Section 3(a) of the Davis-Bacon Act or 29 CFR 5.12(a)(1) or to be awarded HUD contracts or participate in HUD programs pursuant to 24 CFR Part 24.

(ii) No part of this contract shall be subcontracted to any person or firm ineligible for award of a Government contract by virtue of Section 3(a) of the Davis-Bacon Act or 29 CFR 5.12(a)(1) or to be awarded HUD contracts or participate in HUD programs pursuant to 24 CFR Part 24.

(iii) The penalty for making false statements is prescribed in the U.S. Criminal Code, 18 U.S.C. 1001. Additionally, U.S. Criminal Code, Section 1 01 0, Title 18, U.S.C., "Federal Housing Administration transactions", provides in part: "Whoever, for the purpose of . . . influencing in any way the action of such Administration..... makes, utters or publishes any statement knowing the same to be false..... shall be fined not more than $5,000 or imprisoned not more than two years, or both."

11. Complaints, Proceedings, or Testimony by Employees. No laborer or mechanic to whom the wage, salary, or other labor standards provisions of this Contract are applicable shall be discharged or in any other manner discriminated against by the Contractor or any subcontractor because such employee has filed any complaint or instituted or caused to be instituted any proceeding or has testified or is about to testify in any proceeding under or relating to the labor standards applicable under this Contract to his employer.

B. Contract Work Hours and Safety Standards Act. The provisions of this paragraph B are applicable where the amount of the prime contract exceeds $100,000. As used in this paragraph, the terms "laborers" and "mechanics" include watchmen and guards.

(1) Overtime requirements. No contractor or subcontractor contracting for any part of the contract work which may require or involve the employment of laborers or mechanics shall require or permit any such laborer or mechanic in any workweek in which the individual is employed on such work to work in excess of 40 hours in such workweek unless such laborer or mechanic receives compensation at a rate not less than one and one-half times the basic rate of pay for all hours worked in excess of 40 hours in such workweek.

(2) Violation; liability for unpaid wages; liquidated damages. In the event of any violation of the clause set forth in subparagraph (1) of this paragraph, the contractor and any subcontractor responsible therefor shall be liable for the unpaid wages. In addition, such contractor and subcontractor shall be liable to the United States (in the case of work done under contract for the District of Columbia or a territory, to such District or to such territory), for liquidated damages. Such liquidated damages shall be computed with respect to each individual laborer or mechanic, including watchmen and guards, employed in violation of the clause set forth in subparagraph (1) of this paragraph, in the sum of $10 for each calendar day on which such individual was required or permitted to work in excess of the standard workweek of 40 hours without payment of the overtime wages required by the clause set forth in sub paragraph (1) of this paragraph.

(3) Withholding for unpaid wages and liquidated damages. HUD or its designee shall upon its own action or upon written request of an authorized representative of the Department of Labor withhold or cause to be withheld, from any moneys payable on account of work performed by the contractor or subcontractor under any such contract or any other Federal contract with the same prime contract, or any other Federally-assisted contract subject to the Contract Work Hours and Safety Standards Act which is held by the same prime contractor such sums as may be determined to be necessary to satisfy any liabilities of such contractor or subcontractor for unpaid wages and liquidated damages as provided in the clause set forth in subparagraph (2) of this paragraph.

(4) Subcontracts. The contractor or subcontractor shall insert in any subcontracts the clauses set forth in subparagraph (1) through (4) of this paragraph and also a clause requiring the subcontractors to include these clauses in any lower tier subcontracts. The prime contractor shall be responsible for compliance by any subcontractor or lower tier subcontractor with the clauses set forth in subparagraphs (1) through (4) of this paragraph.

C. Health and Safety. The provisions of this paragraph C are applicable where the amount of the prime contract exceeds $100,000.

(1) No laborer or mechanic shall be required to work in surroundings or under working conditions which are unsanitary, hazardous, or dangerous to his health and safety as determined under construction safety and health standards promulgated by the Secretary of Labor by regulation.

(2) The Contractor shall comply with all regulations issued by the Secretary of Labor pursuant to Title 29 Part 1926 and failure to comply may result in imposition of sanctions pursuant to the Contract Work Hours and Safety Standards Act, (Public Law 91-54, 83 Stat 96). 40 USC 3701 et seq.

(3) The contractor shall include the provisions of this paragraph in every subcontract so that such provisions will be binding on each subcontractor. The contractor shall take such action with respect to any subcontractor as the Secretary of Housing and Urban Development or the Secretary of Labor shall direct as a means of enforcing such provisions.

CDBG-DR Rider

[illegible]

[illegible]

[illegible] the U.S. Department of Housing and Urban Development ("HUD") [illegible] ("CDBG [illegible]") Program [illegible] ***except those funded by the regular CDBG ("CDBG") Program*** [illegible]

[illegible]

[illegible]

[illegible]

[illegible]

Contents

□□□□□□□□□□ □□□□□□□□□□□

ARTICLE 1. DEFINITIONS

□ □□□□□d □□□□□□□□□□□□ □□□□□□ □ □d□r□

(a) "Act" means Title 1 of the Housing and Community Development Act of 1974 (P□□□ □□□□□□□□□□□□□□□□ □□d□d□

(b) "Agency" means the entity, or entities, executing this Agreement on behalf of the City □□□□ □□ □□ □r□□

(c) "Agreement" means either the "contract" (as defined by 2 CFR § 200.2 □□□□□□□ □□□□□□□□ □□□□□□d □□□□□□ □□r □□□r□r□r□□□□□□r □□□ □□□□□□□□ □□□□□□□ City and "Subrecipient" as defined by 2 □□□ □□□□□00□ □□□□□□□□□□□□□□□r□□□r□□□□

(d) "City" means the City of New York.

(e) "Construction" means the building, rehabilitation, alteration, conversion, extension, d□□ □□□□□□□□□□□□□□□□□□□□r□r□□□r□□□□□□□□□□□□ □r□□□□ □□□□□□□r□□□□r□□□r□□□r□□□

(f) "Contractor" and/or "Subrecipient" means the entity or entities executing this □□r□□□ □□□□□□□□□r□□□□□□□□□□□ □□□□□□□

(g) "Equipment" means tangible personal property (including information technology □□□□□□□ □□□□□□□□□□□□□□□□□□□□

ARTICLE 2. HOUSING AND COMMUNITY DEVELOPMENT ACT AND NATIONAL ENVIRONMENTAL POLICY ACT

[Applicable to Contractors and Subrecipients]

the Agency has received from the City's Office of Management and

ARTICLE 3. LABOR REQUIREMENTS

[Applicable to Contractors and Subrecipients; must be included in all subcontracts]

Section 3.

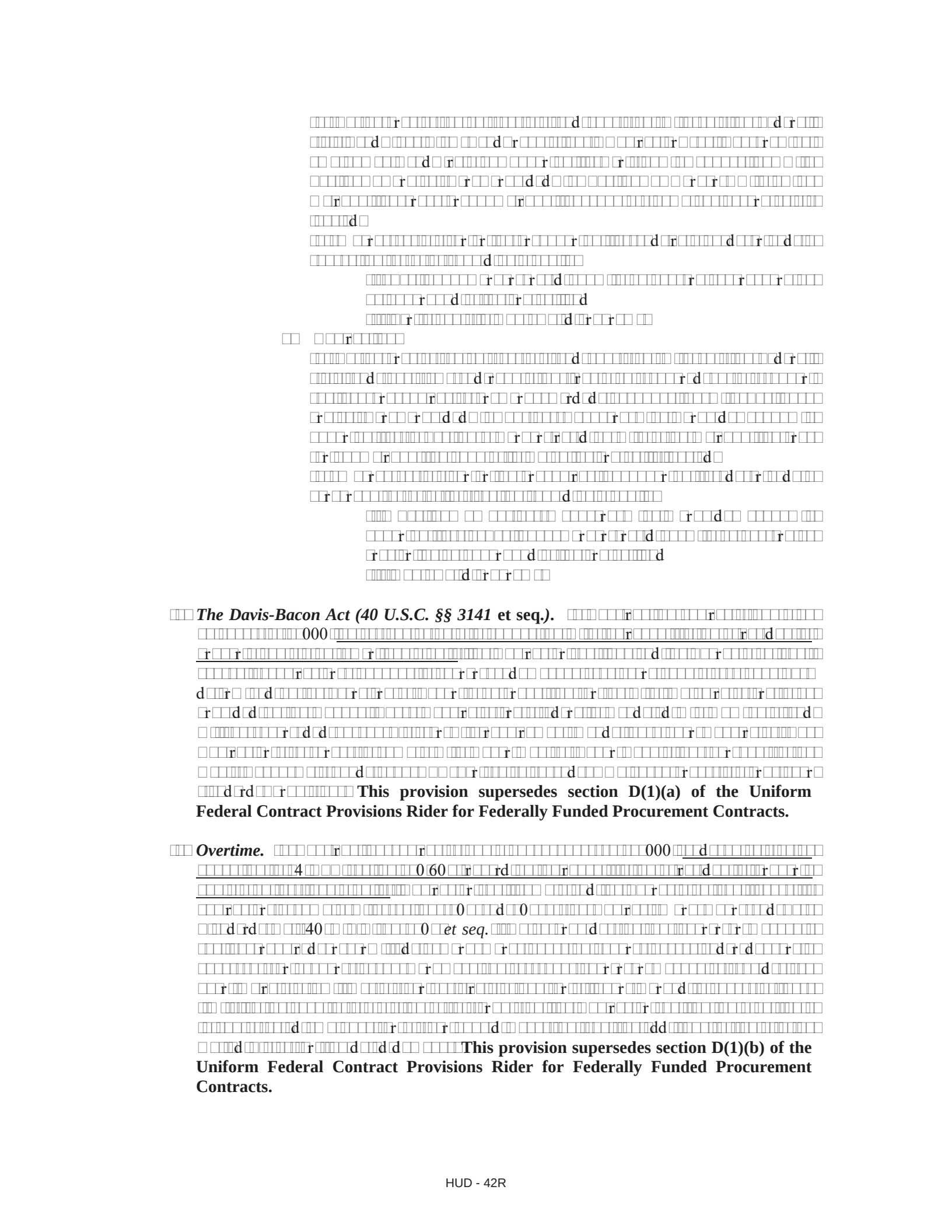

This provision supersedes section D(1)(a) of the Uniform Federal Contract Provisions Rider for Federally Funded Procurement Contracts.

This provision supersedes section D(1)(b) of the Uniform Federal Contract Provisions Rider for Federally Funded Procurement Contracts.

ARTICLE 4. ADDITIONAL FEDERAL CONDITIONS FOR CONSTRUCTION FOR SUBRECIPIENTS

[Applicable to Subrecipients. A similar provision for Contractors is included in the Uniform Federal Contract Provisions Rider for Federally Funded Procurement Contracts at section D(1)(c)-(d), (2) and (3).]

Impermissible Salary Deductions. land "Anti-Kickback"
than once a week, and prohibiting all but "permissible" sa

Federal Labor Standards.

Equal Employment Opportunity. ns and Clause below, the term "Construction Work" means the

Standard Federal Equal Employment Opportunity Construction Contract Specifications for Contracts and Subcontracts in Excess of $10,000. (Federal Notice Required by 41 CFR § 60-4.3)

"Covered area" means the geographical area described in the solicitation from

"Director" means Director, Office of Federal

"Employer identification number" means the Federal Social Security number used on the Employer's Quarterly Federal Tax Return, U.S.

d. "Minority" includes:

(1) Black persons (all persons having origins in any of the Black racial groups of Africa);

(2) Hispanic persons (all persons of Mexican, Puerto Rican, Cuban, Central or South American or other Spanish culture or origin, regardless of race);

(3) Native American (American Indians), Eskimos, and Aleuts (all persons having origins in any of the original peoples of North America); and

(4) Asian and Pacific Islanders (all persons having origins in any of the original peoples of the Far East, Southeast Asia, the Indian subcontinent, or the Pacific Islands).

5. Whenever the contractor, or any subcontractor at any tier, subcontracts a portion of the work involving any craft or trade in which it does not normally perform work with its own organization, the contractor shall actively solicit bids for the subcontract work from qualified minority and female construction subcontractors. A list of known minority and female construction subcontractors is available from the Area Office. In the event the contractor is unable to receive a bid for subcontract work from a minority or female construction subcontractor, the contractor shall so certify to the Area Office and shall set forth the efforts it made to obtain such bids.

6. If the contractor or subcontractor has a collective bargaining agreement or other contract or understanding that calls for all vacancies to be filled through referrals from a union with which the contractor has a collective bargaining agreement or other contract or understanding, and the union does not refer to the contractor or subcontractor a sufficient number of minority workers or women within the normal referral process, the contractor or subcontractor may, pursuant to applicable procedures, request such referrals fill such vacancies from any source other than the union's referral system. The contractor or subcontractor shall report in writing to the Area Office the efforts it has made to secure such referrals and shall request the union to refer minority workers or women sufficient to fill the vacancies. Within 10 days from the date of the request, the union shall respond to the request. Failure of the union to act within the 10 days shall be construed by the Area Office as unwillingness or inability to provide the referrals. The contractor or subcontractor is expected to make every effort to exhaust all sources of minority workers and women within the union's referral system before the union's inability to refer is deemed good cause for not meeting the obligations under these specifications. Even if the union refers minority workers or women sufficient to fill the vacancies, the contractor or subcontractor is expected to exhaust all sources of minority workers and women before the union's referral is deemed good cause for not meeting the obligations under these specifications. In the event the union is unable to provide sufficient minority workers or women, the contractor or subcontractor may be required to employ recruitment or training agencies gathering minority workers or women outside the union's referral system. The contractor or subcontractor shall report in writing to the Area Office any efforts it has made to recruit through such agencies. Determination of adequate recruitment through agencies is the responsibility of the Area Office. Adequate recruitment normally includes sending written notification to organizations such as the Area Office has listed.

7. The contractor shall not use the goals and timetables or affirmative action standards to discriminate against any person because of race, color, religion, sex, or national origin.

8. The contractor shall not enter into any subcontract with any person or firm debarred from Government contracts pursuant to Executive Order 11246.

9. The contractor shall carry out such sanctions and penalties for violation of these specifications and of the Equal Opportunity clause, including suspension, termination and cancellation of existing subcontracts as may be imposed or ordered pursuant to Executive Order 11246, as amended, and its implementing regulations, by the Office of Federal Contract Compliance Programs. Any contractor who fails to carry out such sanctions and penalties shall be in violation of these specifications and Executive Order 11246, as amended.

10. The contractor, subcontractor or any firm appearing to be an affiliate of the contractor or subcontractor shall provide prior notice to the Area Office of any future consolidation or merger proposals or future acquisitions of additional construction firms, and the Area Office may request such additional information and set such organizational completion deadlines as may be necessary to enable the Area Office to determine whether the proposed transaction will create a single employer or joint employer relationship. The Area Office shall process such requests in accordance with 41 CFR 60-4.3(b), including any exemptions contained therein.

11. The contractor, subcontractor or any firm appearing to be an affiliate of the contractor or subcontractor shall not engage in any transaction contemplated to circumvent these specifications or the equal opportunity clause, including the use of front companies, corporate mergers, consolidations, reorganizations or purchases or sales of portions of companies. If the contractor becomes aware of any transaction contemplated to circumvent these specifications or the equal opportunity clause, it shall notify the Area Office within 24 hours of becoming aware of the transaction. The Area Office shall process such notifications in accordance with 41 CFR 60-4.3(b), including any exemptions contained therein.

12. The contractor shall furnish to the Area Office such information as may be requested by the Area Office or the Director of the Office of Federal Contract Compliance Programs, and shall permit access to its premises, during normal business hours, by the Area Office or the Director of the Office of Federal Contract Compliance Programs for the purpose of investigating to ascertain compliance with these specifications and other applicable rules, regulations, and orders. Information obtained in this manner shall be used only in accordance with the provisions of 41 CFR 60-4.8(c)(1).

13. The contractor shall carry out these specifications with respect to any preaward period to the extent possible.

14. The contractor shall include these specifications in every subcontract, including pre-existing contracts, and shall take such action with respect to any subcontractor as may be directed by the Area Office or the Director of the Office of Federal Contract Compliance Programs, including sanctions for noncompliance. However, in the event a contractor becomes involved in litigation with a subcontractor or vendor as a result of such direction by the Area Office or the Director of the Office of Federal Contract Compliance Programs, the contractor may request the United States to enter into such litigation to protect the interests of the United States.

15. The contractor shall keep such records as are necessary to determine compliance with its equal opportunity obligations. The records kept by the contractor shall be designed to indicate:

a. The number of minority and nonminority group members and women employed in each work classification on the project;

b. The progress and efforts being made in cooperation with unions to increase employment opportunities for minorities and women (applicable to contractors and subcontractors subject to the bid conditions which include compliance with the goals set forth in the Area Office's Order on these specifications); and

c. The progress and efforts being made in locating, hiring, training, qualifying, and upgrading minorities and women.

16. Contractors and subcontractors shall submit an annual report to the Area Office each July for the duration of the project, indicating the number of minority, women, and nonminority group employees currently engaged in each work classification required by the contract work. This information is to be reported on Standard Form 100 (EEO-1). If on-the-job training is being required by special provision, contractors or subcontractors will be required to furnish Standard Form 1409 or any approved substitute thereof.

6

opportunity. The evaluation of the contractor's compliance with these specifications

and coercion at all sites, and in all facilities at which the contractor's employees are

r's obligation to maintain such a working environment, with specific attention to

opportunities available, and maintain a record of the organization's responses.

other information that the union referral process has impeded the contractor's efforts to

programs and apprenticeship and trainee programs relevant to the contractor's

Disseminate the contractor's EEO policy by providing notice of the policy to

□□ Review, at least annually, the company's EEO policy and affirmative action

□□ Disseminate the contractor's EEO policy externally by including it in any and providing written notification to and discussing the contractor's EEO policy with

□ and female recruitment and training organizations serving the contractor's recruitment

□ contractor's work force.

□□ 4 60

□ contractor's obligations under these specifications are being carried out.

□□ Conduct a review, at least annually, of all supervisor's adherence to and performance under the Contractor's EEO policies and affirmative action obligations.

□□

contractor's minority and female work force participation, makes a good faith effor
obligation to comply, however, is the contractor's and failure of such a group t
obligation shall not be a defense for the contractor's noncompliance.

[illegible]

Equal Opportunity Clause. [illegible]

[illegible]

[illegible]

[illegible]

[illegible]

[illegible]

[illegible]

[illegible]

ARTICLE 5. FEDERAL NON-DISCRIMINATION LAWS

[Applicable to Contractors and Subrecipients]

ARTICLE 7. UNIFORM RELOCATION ASSISTANCE

[Applicable to Contractors and Subrecipients]

ARTICLE 8. UNIFORM ADMINISTRATIVE REQUIREMENTS (INCLUDING PROCUREMENT STANDARDS), COST PRINCIPLES, AND AUDIT REQUIREMENTS FOR FEDERAL AWARDS

[Subdivision (a) is applicable to Contractors and Subrecipients; subdivision (b) is applicable to Subrecipients only; subdivision (c) is applicable to Contractors only]

[illegible] [illegible] 400 [illegible] 0 [illegible] d [illegible] 4 [illegible] [illegible] [illegible]

receive a statement from the Contractor's or Subrecipient's chief fiscal officer or its

ARTICLE 10. RECORDS AND AUDITS

[Applicable to Contractors and Subrecipients]

the City's

[illegible]

ARTICLE 11. SUBCONTRACTORS

[Applicable to Contractors and Subrecipients]

[illegible]

[illegible]

[illegible]

ARTICLE 12. CONFLICTS; EXHIBITS

[Applicable to Contractors and Subrecipients]

[illegible]

[illegible]

ARTICLE 13. REVERSION OF ASSETS

[Applicable to Subrecipients]

[illegible] At the Agreement's expiration, the Subrecipient shall transfer to the City all [illegible]

[illegible] Any real property under the Subrecipient's control that was acq[illegible]

[illegible]

[illegible]000 [illegible]

ARTICLE 14. SMALL FIRMS, M/WBE FIRMS, AND LABOR SURPLUS AREA FIRMS

[Applicable to Subrecipients. Contractors must follow section C(11) of the Uniform Federal Contract Provisions Rider for Federally Funded Procurement Contracts.]

[illegible] subcontracts are to be let, in order to ensure that minority firms, women's business enterprises, [illegible]

[illegible] rity businesses and women's business enterprises on [illegible]

[illegible] Assuring that small and minority businesses, and women's business enterprises are [illegible]

[illegible] to permit maximum participation by small and minority businesses, and women's [illegible]

[illegible] sinesses, and women's business enterprises; and

[illegible]

ARTICLE 15. INTANGIBLE PROPERTY

[Applicable to Subrecipients. A similar provision for Contractors is included in the Uniform Federal Contract Provisions Rider for Federally Funded Procurement Contracts at section C(14).]

[illegible]

[illegible] ("Copyrightable Materials"), and any and all drafts and/or [illegible]

[illegible] shall be considered "work [illegible] hire" within the meaning [illegible] Materials do not qualify as "work [illegible] hire," the [illegible]

ARTICLE 16. HATCH ACT; LOBBYING; CONFLICTS OF INTEREST

[Applicable to Subrecipients.]

ARTICLE 17. SUSPENSION AND TERMINATION

[Applicable to Subrecipients.]

ARTICLE 18. PERFORMANCE REQUIREMENTS AND REMEDIES

[Applicable to Contractors]

contracts to contain “performance requirements and penalties.”

FED. EXHIBIT 1

NOTICE TO BIDDERS

1. The Offeror's or Bidder's attention is called to the "Equal Opportunity Clause" and the "Standard Federal Equal Employment Opportunity Construction Contract Specifications" set

for the Contractor's aggregate workforce in

	0	0
	6	0
	4 6	6
	6	6 0
	6	6 0
	0	4
		0
		6
	4	
		0
	6	
	4	0
	0	0
	6 0	0 0
		0
	0	
	0	
	6 4	

0 6

the Contractor's Construction W

The Contractor's compliance with the Executive Order and the regulations in 41 CFR Part 60-4 for the sole purpose of meeting the Contractor's goals shall be a violation of the contract, the

4. As used in this Agreement, the "covered area" is the City of New York.

EXHIIBIT 2

EXHIBIT 3

INVESTIGATIONS CLAUSE, CONFLICTS OF INTEREST CLAUSE; AND EXECUTIVE ORDER NO. 50

I. Investigations Clause

□□ The term "entity" as used in this Section shall be defined a□□□□□□□r□ □□ □r□□r□□□□□□□r□□r□□□□□□□□□□□□□□□□□□□□r□□r□□□□□□□r□□□□□□□□□□□□□□□□□□□

basis of the owners', partners' or shareholders' race, color, creed, national origin

Division of Labor Services ("DLS"); and

"General Decision Number: NY20210003 01/01/2021

Superseded General Decision Number: NY20200003

State: New York

Construction Types: Building, Heavy, Highway and Residential

Counties: Bronx, Kings, New York, Queens and Richmond
Counties in New York.

BUILDING & RESIDENTIAL CONSTRUCTION PROJECTS (includes single family homes and apartments up to and including 4 stories), HEAVY AND HIGHWAY CONSTRUCTION PROJECTS

Note: Under Executive Order (EO) 13658, an hourly minimum wage of $10.95 for calendar year 2021 applies to all contracts subject to the Davis-Bacon Act for which the contract is awarded (and any solicitation was issued) on or after January 1, 2015. If this contract is covered by the EO, the contractor must pay all workers in any classification listed on this wage determination at least $10.95 per hour (or the applicable wage rate listed on this wage determination, if it is higher) for all hours spent performing on the contract in calendar year 2021. If this contract is covered by the EO and a classification considered necessary for performance of work on the contract does not appear on this wage determination, the contractor must pay workers in that classification at least the wage rate determined through the conformance process set forth in 29 CFR 5.5(a)(1)(ii) (or the EO minimum wage rate, if it is higher than the conformed wage rate). The EO minimum wage rate will be adjusted annually. Please note that this EO applies to the above-mentioned types of contracts entered into by the federal government that are subject to the Davis-Bacon Act itself, but it does not apply to contracts subject only to the Davis-Bacon Related Acts, including those set forth at 29 CFR 5.1(a)(2)-(60). Additional information on contractor requirements and worker protections under the EO is available at www.dol.gov/whd/govcontracts.

Modification Number	Publication Date
0	01/01/2021

ASBE0012-001 12/30/2019

	Rates	Fringes
Asbestos Workers/Insulator Includes application of all insulating materials, protective coverings, coatings and finishes to all types of mechanical systems	$ 69.01	34.16

HAZARDOUS MATERIAL HANDLER.....$ 39.00 12.75

BOIL0005-001 01/01/2017

	Rates	Fringes
BOILERMAKER.....$	55.23	33%+24.12+a

FOOTNOTE:

a. PAID HOLIDAYS: New Year's Day, Thanksgiving Day, Memorial Day, Independence Day, Labor Day and Good Friday, Friday after Thanksgiving, Christmas Eve Day and New Year's Eve

---

BRNY0001-001 07/01/2020

	Rates	Fringes
BRICKLAYER.....$	62.54	29.40
MASON - STONE.....$	67.88	36.91

BRNY0001-002 07/01/2020

	Rates	Fringes
Pointer, cleaner and caulker.....$	55.97	29.64

BRNY0004-001 07/01/2019

	Rates	Fringes
MARBLE MASON.....$	59.44	36.88

BRNY0007-001 01/01/2020

	Rates	Fringes
TERRAZZO FINISHER.....$	46.20	31.70
TERRAZZO WORKER/SETTER.....$	56.81	36.99

BRNY0020-001 07/01/2019

	Rates	Fringes
MARBLE FINISHER.....$	47.41	34.64

BRNY0024-001 01/01/2018

	Rates	Fringes
BRICKLAYER		
MARBLE POLISHERS.....$	40.89	26.69

BRNY0052-001 12/02/2019

	Rates	Fringes
Tile Layer.....$	59.73	35.37

BRNY0088-001 12/02/2019

	Rates	Fringes
TILE FINISHER	$ 46.20	31.70

CARP0001-003 07/01/2020

	Rates	Fringes
CARPENTER (HEAVY & HIGHWAY)	$ 55.93	51.79

CARP0001-009 07/01/2020

	Rates	Fringes
CARPENTER (BUILDING & RESIDENTIAL)		
Carpenters	$ 54.00	46.18
Soft Floor Layers	$ 54.00	46.18

CARP0740-001 07/01/2020

	Rates	Fringes
MILLWRIGHT	$ 55.70	53.61

CARP1556-006 07/01/2020

	Rates	Fringes
Dock Builder & Piledrivermen	$ 55.93	51.79

CARP1556-007 07/01/2020

	Rates	Fringes
Diver Tender	$ 50.34	51.79
Diver	$ 70.80	51.79

CARP1556-011 07/01/2020

	Rates	Fringes
Carpenters:		
TIMBERMEN	$ 51.05	51.24

ELEC0003-001 04/11/2019

	Rates	Fringes
ELECTRICIAN		
Electricians	$ 56.00	76.725%+16.25
Jobbing, and maintenance and repair work	$ 28.50	51.243%+7.50+a

PAID HOLIDAYS:

a. New Years Day, Martin Luther King, Jr.'s Birthday, Washington's Birthday, Memorial Day, Independence Day, Labor Day, Columbus Day, Election Day, Thanksgiving Day, the day after Thanksgiving Day, and Christmas Day

---

ELEC1049-001 03/31/2019

QUEENS COUNTY

	Rates	Fringes
Line Construction (Substation and Switching structures pipe type cable installation and maintenance jobs or projects; Railroad electrical distribution/transmission systems maintenance (when work is not performed by railroad employees) Overhead and Underground transmission/distribution line work. Fiber optic, telephone cable and equipment)		
Groundman	$ 34.45	23.06
Heavy Equipment Operator	$ 45.93	28.24
Lineman and Cable Splicer	$ 57.41	29.72
Tree Trimmer	$ 30.09	14.12

ELEV0001-002 03/17/2018

	Rates	Fringes
ELEVATOR MECHANIC		
Elevator Constructor	$ 64.48	36.21+a+b
Modernization and Repair	$ 50.49	40.399+a+b

FOOTNOTE:

a. PAID HOLIDAYS: New Year's Day, Good Friday, President's Day, Memorial Day, Independence Day, Labor Day, Columbus Day, Veteran's Day, Thanksgiving Day, Friday after Thanksgiving, and Christmas Day.

b. PAID VACATION: An employee who has worked less than 5 years shall recieve vacation pay credit on the basis of 4% of his hourly rate for all hours worked; an employee who has worked 5 to 15 years shall receive vacation pay credit on the basis of 6% of his hourly rate for all hours worked; an employee who has worked 15 or more years shall receive vacation pay credit on the basis of 8% of his hourly rate for all hours worked.

ENGI0014-001 07/01/2019

	Rates	Fringes

POWER EQUIPMENT OPERATOR
(HEAVY & HIGHWAY)

GROUP 1	$ 101.71	27.05
GROUP 2	$ 84.01	27.05
GROUP 3	$ 86.69	27.05
GROUP 4	$ 84.62	27.05
GROUP 5	$ 82.96	27.05
GROUP 6	$ 79.68	27.05
GROUP 7	$ 81.17	27.05
GROUP 8	$ 78.85	27.05
GROUP 9	$ 77.19	27.05
GROUP 10	$ 73.82	27.05
GROUP 11	$ 69.01	27.05
GROUP 12	$ 70.53	27.05
GROUP 13	$ 71.06	27.05
GROUP 14	$ 53.74	27.05
GROUP 15	$ 49.99	27.05

POWER EQUIPMENT OPERATOR
(PAVEMENT-HEAVY & HIGHWAY)

Asphalt Plants	$ 65.08	27.05
Asphalt roller	$ 76.83	27.05
Asphalt spreader	$ 78.85	27.05

POWER EQUIPMENT OPERATOR
(STEEL ERECTION)

Compressors, Welding Machines	$ 45.34	31.15
Cranes, Hydraulic Cranes, 2 drum derricks, Forklifts, Boom Trucks	$ 76.43	31.15
Three drum derricks	$ 79.54	31.15

POWER EQUIPMENT OPERATOR
(UTILITY)

Horizontal Boring Rig	$ 75.02	27.05
Off shift compressors	$ 62.44	27.05
Utility Compressors	$ 49.67	27.05

POWER EQUIPMENT OPERATOR CLASSIFICATIONS

GROUP 1: Tower crane

GROUP 2: Rubber Tire Backhoes over 37,000 lbs, Track Backhoes, power shovel, Hydraulic clam shells, moles and machines of a similar type

GROUP 3: Mine hoists and crane, etc. used as mine hoists

GROUP 4: Gradalls, keystones, cranes (with digging buckets), bridge cranes, trenching machines, vermeer cutter and machines of a similar nature

GROUP 5: Piledrivers, derrick boats, tunnel shovels

GROUP 6: All drills, and machines of a similar nature

GROUP 7: Back filling machines, cranes, mucking machines, dual drum pavers

GROUP 8: Mixers (concrete w/loading attachments), concrete pavers, cableways, land derricks, power house (low pressure

units), concrete pumps

GROUP 9: Concrete plants, well drilling machines, stone crushers double drum hoist, power house (other than above)

GROUP 10: Concrete mixers

GROUP 11: Elevators

GROUP 12: Concrete breaking machine, Hoists (single drum), load masters, locomotive and dinkies over 10 tons

GROUP 13: Vibratory console

GROUP 14: Compressors (portable 3 or more in battery), tugger machine (caissons), well point pumps, chum drill

GROUP 15: Boilers, (high pressure, compressors (portable, single, or 2 in battery, not over 100' apart), pumps (river cofferdam and welding machines (except where arc is operated by members of local 15) push button machines, all engines irrespective of power (power pac) used to drive auxilliary equipment, air, hydraulic etc.

PREMIUMS ON CRANES (Crawler or Truck):
100' to 149' boom - add .50
150' to 249' boom - add .75
250' to 349' boom - add 1.00
350' to 450' boom - add 1.50

Premiums for Cranes on Steel Erection:
100' to 149' boom - add 1.75
150' to 249' boom - add 2.00
250' to 349' boom - add 2.25
350' to 450' boom - add 2.75
Tower crane - add 2.00

FOOTNOTE:
a. Paid Holidays: New Year's Day; Lincoln's Birthday; Washington's Birthday; Memorial Day; Independence Day; Labor Day; Veterans Day; Columbus Day; Election Day; Thanksgiving Day; and Christmas Day; provided the employee works one day the payroll week in which the holiday occurs.

ENGI0014-002 07/01/2019

	Rates	Fringes
Power Equipment Operator		
BUILDING & RESIDENTIAL		
GROUP 1	$ 79.02	27.05
GROUP 2	$ 83.68	27.05
GROUP 3	$ 76.35	27.05
GROUP 4	$ 69.51	27.05
GROUP 5	$ 52.21	27.05

POWER EQUIPMENT OPERATORS CLASSIFICATIONS

GROUP 1: Double drum

GROUP 2: Stone derrick, cranes, hydraulic cranes, boom trucks

GROUP 3: 4 pole Hoist, Single Drum Hoists

GROUP 4: Fork lift, house cars, plaster (platform machine), plaster bucket, concrete pump and all other equipment used for hoisting material

GROUP 5: Compressors, welding machines (cutting concrete work), paint spraying, sand blasting, pumps (with the exclusion of concrete pumps), house car (settlement basis only), all engines irrespective of power (power pac) used to drive auxiliary equipment, air, hydraulic, etc., boilers

Premiums for Cranes:
100'-149' boom - add 1.75
150'-249' boom - add 2.00
250'-349' boom - add 2.25
350'-450' boom - add 2.75
Tower cranes add 2.00

FOOTNOTE:
a. PAID HOLIDAYS: New Year's Day, Lincoln's Birthday, Memorial Day, Independence Day, Labor Day, Veteran's Day, Columbus Day, Election Day, Thanksgiving Day, and Christmas Day, provided the employee works one day in the payroll week in which the holiday occurs

---

ENGI0015-001 07/01/2019

	Rates	Fringes
POWER EQUIPMENT OPERATOR		
HEAVY AND HIGHWAY		
GROUP 1	$ 70.71	36.75
GROUP 2	$ 68.58	36.75
GROUP 3	$ 65.00	36.75
GROUP 4	$ 61.42	36.75
GROUP 5	$ 42.13	36.75

POWER EQUIPMENT OPERATORS CLASSIFICATIONS

GROUP 1: Cherrypickers 20 tons and over and loaders (rubber-tired and/or tractor type with a manfufacturer's rated capacity of six cubic yards and over

GROUP 2: Rubber Tire Backhoes up to and including 37,000 lbs, Basin Machines, Groover, Mechanical Sweepers, Bobcat, Boom Truck, Barrier Transport (Barrier Mover) and machines of a similar nature, Boat Captains, Boat Operators, operation of Churn Drills and machines of a similar nature, Stetco Silent Hoist and machines of a similar nature, Vac-alls, Meyers Machines, John Beam and machines of a similar nature, Ross Carriers and Travel Lifts and machines of a similar nature, Bulldozers, Scrapers, and Turn-a Pulls,

Tugger Hoist (used exclusively for handling excavated material), Tractors with attachments, Hyster and Roustabout Cranes, Cherrypickers, Austin Western, Grove and machines of a similar nature, Scoopmobiles, Monorails, Conveyors, Trenchers, Loaders- Rubber-tired and Tractor, Barber Greene, Eimco Loaders and Eimco Backhoes, Mighty Midget and similar breakers and tampers, Curb and Gutter Pavers and Motor Patrol, Motor Graders and all machines of a similar nature, Locomotives ten (10) tons or under, Mini-Max, Break-Tech and machines of a similar nature, Milling Machines, robotic and demolition machines and machines of a similar nature including Bobcat, Pile Rig Rubber-tired Excavator (37,000 lbs. and under), 2 man auger
GROUP 3: Minor Equipment such as Tractors, Post Hole Diggers and Drivers, Ditch Witch (Walk Behind), Road Finishing Machines, Rollers (five (5) tons and under), Tugger Hoists, Dual Purpose Trucks, Fork Lifts and Dempsey Dumpsters

GROUP 4: Oilers for the following equipment: (all gasoline, electric, diesel, or air operated) gradalls and concrete pumps or similarly equipment manned by two-men

GROUP 5: Oilers for the following equipment: (all gasoline, electric, diesel, or air operated) shovels, cranes (draglines), backhoes, pavers, trenching machines, gunite machines, compressors (3 or more in battery)

Premiums for Cranes:
100'-149' boom - add 1.75
150'-249' boom - add 2.00
250'-349' boom - add 2.25
350'-450' boom - add 2.75
Tower cranes add 2.00

FOOTNOTE:
a. PAID HOLIDAYS: New Year's Day, Lincoln's Birthday, Memorial Day, Independence Day, Labor Day, Veteran's Day, Columbus Day, Election Day, Thanksgiving Day, and Christmas Day, provided the employee works one day in the payroll week in which the holiday occurs

---

ENGI0015-002 07/01/2016

	Rates	Fringes
POWER EQUIPMENT OPERATOR		
BUILDING		
GROUP 1	$ 65.94	32.95
GROUP 2	$ 63.98	32.95
GROUP 3	$ 57.42	32.95

POWER EQUIPMENT OPERATORS CLASSIFICATIONS
GROUP 1: Oiler
GROUP 2: Oilers on Crawler Cranes, Backhoes, Trenching machines, Gunite machines, Compressors (3 or more in Battery)
GROUP 3: Gradalls: Concrete Pumps, Power Houses - All equipment in same is manned by two (2) men only, Driving

Truck Cranes
FOOTNOTE:
a. PAID HOLIDAYS: New Year's Day, Lincoln's Birthday, Memorial Day, Independence Day, Labor Day, Veteran's Day, Columbus Day, Election Day, Thanksgiving Day, and Christmas Day, provided the employee works one day in the payroll week in which the holiday occurs

---

IRON0040-002 07/01/2019

BRONX, NEW YORK, RICHMOND

	Rates	Fringes
IRONWORKER, STRUCTURAL	$ 51.45	78.42

IRON0046-003 07/01/2019

	Rates	Fringes
IRONWORKER METALLIC LATHERS AND REINFORCING IRONWORKERS	$ 44.65	46.67

IRON0197-001 07/01/2019

	Rates	Fringes
IRONWORKER STONE DERRICKMAN	$ 50.91	54.11

IRON0361-002 07/01/2019

KINGS, QUEENS

	Rates	Fringes
Ironworkers: (STRUCTURAL)	$ 51.45	78.42

IRON0580-001 07/01/2019

	Rates	Fringes
IRONWORKER, ORNAMENTAL	$ 45.15	55.62

LABO0006-001 07/01/2016

	Rates	Fringes
LABORER (Cement and Concrete Workers)	$ 42.48	17.35

LABO0029-001 07/01/2017

	Rates	Fringes
Laborers:		

Heavy		
Blasters (hydraulic trac drill)	$ 47.15	35.49
Blasters	$ 46.27	35.49
Hydraulic Trac Drill	$ 41.29	35.49
Jackhammers, Chippers, Spaders, Concrete Breakers, All Other Pneumatic Tools, Walk Behind Self-Propelled Hydraulic Asphalt and Concrete Breaker	$ 39.34	35.49
Powder Carriers	$ 35.17	35.49

LABO0078-001 12/01/2016

	Rates	Fringes
LABORERS		
BUILDING CONSTRUCTION		
ASBESTOS (Removal, Abatement, Encapsulation or Decontamination of asbestos); LEAD; & HAZARDOUS WASTE LABORERS (Hazardous Waste, Hazardous Materials, Biochemical and Mold Remediation, HVAC, Duct Cleaning, Re-spray Fireproofing, etc)	$ 36.00	16.20

LABO0079-001 07/01/2018

	Rates	Fringes
LABORER (Building Construction)		
Demolition Laborers (Interior)		
Tier A	$ 37.44	23.60
Tier B	$ 26.63	17.57
Mason Tender/General Laborer	$ 40.65	28.85

CLASSIFICATIONS

TIER A: Responsible for the removal of all interior petitions and structural petitions that can consist of sheet rock, block or masonry. Also, all structural slab openings for ducts, mechanical, shafts, elevators, slab openings and exterior walls where the building is not being completely demolitioned.

TIER B: Responsible for shoveling of debris into containers, pushing containers from the inside to the outside of the building.

LABO0147-001 07/01/2016

	Rates	Fringes
LABORERS (FREE AIR & TUNNEL).....	$ 72.67	47.72

Maintenance Men, Inside Muck Lock Tenders, Pump Men, Electricians, Cement Finishers, Caulkers, Hydraulic Men, Shield Men, Monorail Operators, Motor Men, Conveyor Men, Powder Carriers, Pan Men, Riggers, Chuck Tenders, Track Men Painters, Nippers, Brakemen, Cable Men, Hose Men, Grout Men, Gravel Men, Form Workers, Concrete Workers, Tunnel Laborers, Mole Nipper (one (1) Mole Sipper per Working Shaft per Shift for up to and including Two (2) Moles

---

LABO0731-001 07/01/2016

	Rates	Fringes
LABORER		
Building, Heavy and Residential Construction		
LABORER: (Asbestos, Lead, Hazardous Waste Removal (including soil)/CEMENT/CONCRETE.....	$ 41.00	38.53
UTILITY LABORER.....	$ 40.85	38.53

Paid Holidays: Labor Day and Thanksgiving Day

LABO1010-001 07/01/2019

	Rates	Fringes
Laborers:		
HIGHWAY CONSTRUCTION		
Fence Installer & Repairer.	$ 42.98	43.91
FORMSETTERS.....	$ 46.85	43.91
LABORERS.....	$ 42.98	43.91
Landscape Planting & Maintenance.....	$ 42.98	43.91
Maintenance Safety Surface.	$ 42.98	43.91
Slurry/Sealcoater/Play Equipment Installer.....	$ 42.98	43.91
Small Equipment Operator (Not Operating Engineer)...	$ 42.98	43.91
Small Power Tools Operator.	$ 42.98	43.91

FOOTNOTES:

a. PAID HOLIDAYS: Memorial Day, Fourth of July, Labor Day, Columbus Day, Election Day and Thanksgiving Day, provided the employee has worked one (1) day in the calendar week in which the said holiday occurs.

LABO1010-002 07/01/2019

	Rates	Fringes
Laborers-Asphalt Construction:		
Micro Paver	$ 47.45	43.91
Raker	$ 46.85	43.91
Screedperson	$ 47.45	43.91
Shoveler (Production Paving Only)	$ 42.98	43.91
Small Equipment Operator (Asphalt)	$ 42.98	43.91

PAIN0009-001 05/01/2020

	Rates	Fringes
GLAZIER	$ 46.55	44.77
PAINTER		
Painters, Drywall Finishers, Lead Abatement Worker	$ 45.70	27.67
Spray, Scaffold and Sandblasting	$ 48.70	27.67

* PAIN0806-001 10/01/2020

	Rates	Fringes
Painters:		
Structural Steel and Bridge	$ 51.50	49.63

PAIN1974-001 09/28/2020

	Rates	Fringes
Painters:		
Drywall Tapers/Pointers	$ 48.47	27.91

PLAS0262-001 08/01/2019

	Rates	Fringes
PLASTERER	$ 45.73	30.37

PLAS0262-002 08/01/2019

KINGS AND QUEENS COUNTIES

	Rates	Fringes
PLASTERER	$ 45.73	30.37

PLAS0780-001 07/01/2018

	Rates	Fringes
CEMENT MASON/CONCRETE FINISHER	$ 51.97	33.56

PLUM0001-001 10/01/2018

	Rates	Fringes
PLUMBER		
MECHANICAL EQUIPMENT AND SERVICE		
Any repair and/or replacement of the present plumbing system that does not change the existing roughing	$ 42.30	17.11
PLUMBERS:	$ 68.40	33.80

PLUM0638-001 07/26/2019

	Rates	Fringes
PLUMBER		
SERVICE FITTERS	$ 41.75	14.00
SPRINKLER FITTERS, STEAMFITTERS	$ 57.50	50.39

Service Fitter work shall consist of all repair, service and maintenance work on domestic, commercial and industrial refrigeration, air conditioning and air cooling, stoker and oil burner apparatus and heating apparatus etc., including but not exclusively the charging, evacuation, leak testing and assembling for all machines for domestic, commercial and industrial refrigeration, air conditioning and heating apparatus. Also, work shall include adjusting, including capacity adjustments, checking and repairing or replacement of all controls and start up of all machines and repairing all defects that may develop on any system for domestic, commercial and industrial refrigeration and all air conditioning, air cooling, stoker and oil burner apparatus and heating apparatus regardless of size or type.

ROOF0008-003 07/01/2020

	Rates	Fringes
ROOFER	$ 44.25	34.87

SHEE0028-002 07/31/2014

	Rates	Fringes
SHEET METAL WORKER		
BUILDING CONSTRUCTION	$ 50.91	36.70
RESIDENTIAL CONSTRUCTION	$ 27.22	16.48

TEAM0282-001 07/01/2019

	Rates	Fringes
TRUCK DRIVER		
Asphalt	$ 42.68	46.9025+a
Euclids & Turnapulls	$ 44.40	49.0325+a
High Rise	$ 52.39	47.6925+a

FOOTNOTES:

PAID HOLIDAYS: New Year's Day, Presidents' Day, Memorial Day, Independence Day, Labor Day, Columbus Day, Election Day, Veterans' Day (Armistice Day), Thanksgiving Day, Day after Thanksgiving and Christmas Day. Employees working two (2) days in the calendar week in which a holiday falls are to be paid for such holiday, provided that they shape each remaining workday during such calendar week.

WELDERS - Receive rate prescribed for craft performing operation to which welding is incidental.

==========

Note: Executive Order (EO) 13706, Establishing Paid Sick Leave for Federal Contractors applies to all contracts subject to the Davis-Bacon Act for which the contract is awarded (and any solicitation was issued) on or after January 1, 2017. If this contract is covered by the EO, the contractor must provide employees with 1 hour of paid sick leave for every 30 hours they work, up to 56 hours of paid sick leave each year. Employees must be permitted to use paid sick leave for their own illness, injury or other health-related needs, including preventive care; to assist a family member (or person who is like family to the employee) who is ill, injured, or has other health-related needs, including preventive care; or for reasons resulting from, or to assist a family member (or person who is like family to the employee) who is a victim of, domestic violence, sexual assault, or stalking. Additional information on contractor requirements and worker protections under the EO is available at www.dol.gov/whd/govcontracts.

Unlisted classifications needed for work not included within the scope of the classifications listed may be added after award only as provided in the labor standards contract clauses (29CFR 5.5 (a) (1) (ii)).

The body of each wage determination lists the classification and wage rates that have been found to be prevailing for the cited type(s) of construction in the area covered by the wage determination. The classifications are listed in alphabetical order of ""identifiers"" that indicate whether the particular rate is a union rate (current union negotiated rate for local), a survey rate (weighted average rate) or a union average rate (weighted union average rate).

Union Rate Identifiers

A four letter classification abbreviation identifier enclosed in dotted lines beginning with characters other than ""SU"" or ""UAVG"" denotes that the union classification and rate were

prevailing for that classification in the survey. Example: PLUM0198-005 07/01/2014. PLUM is an abbreviation identifier of the union which prevailed in the survey for this classification, which in this example would be Plumbers. 0198 indicates the local union number or district council number where applicable, i.e., Plumbers Local 0198. The next number, 005 in the example, is an internal number used in processing the wage determination. 07/01/2014 is the effective date of the most current negotiated rate, which in this example is July 1, 2014.

Union prevailing wage rates are updated to reflect all rate changes in the collective bargaining agreement (CBA) governing this classification and rate.

Survey Rate Identifiers

Classifications listed under the ""SU"" identifier indicate that no one rate prevailed for this classification in the survey and the published rate is derived by computing a weighted average rate based on all the rates reported in the survey for that classification. As this weighted average rate includes all rates reported in the survey, it may include both union and non-union rates. Example: SULA2012-007 5/13/2014. SU indicates the rates are survey rates based on a weighted average calculation of rates and are not majority rates. LA indicates the State of Louisiana. 2012 is the year of survey on which these classifications and rates are based. The next number, 007 in the example, is an internal number used in producing the wage determination. 5/13/2014 indicates the survey completion date for the classifications and rates under that identifier.

Survey wage rates are not updated and remain in effect until a new survey is conducted.

Union Average Rate Identifiers

Classification(s) listed under the UAVG identifier indicate that no single majority rate prevailed for those classifications; however, 100% of the data reported for the classifications was union data. EXAMPLE: UAVG-OH-0010 08/29/2014. UAVG indicates that the rate is a weighted union average rate. OH indicates the state. The next number, 0010 in the example, is an internal number used in producing the wage determination. 08/29/2014 indicates the survey completion date for the classifications and rates under that identifier.

A UAVG rate will be updated once a year, usually in January of each year, to reflect a weighted average of the current negotiated/CBA rate of the union locals from which the rate is based.

WAGE DETERMINATION APPEALS PROCESS

1.) Has there been an initial decision in the matter? This can

be:

* an existing published wage determination
* a survey underlying a wage determination
* a Wage and Hour Division letter setting forth a position on a wage determination matter
* a conformance (additional classification and rate) ruling

On survey related matters, initial contact, including requests for summaries of surveys, should be with the Wage and Hour Regional Office for the area in which the survey was conducted because those Regional Offices have responsibility for the Davis-Bacon survey program. If the response from this initial contact is not satisfactory, then the process described in 2.) and 3.) should be followed.

With regard to any other matter not yet ripe for the formal process described here, initial contact should be with the Branch of Construction Wage Determinations. Write to:

Branch of Construction Wage Determinations
Wage and Hour Division
U.S. Department of Labor
200 Constitution Avenue, N.W.
Washington, DC 20210

2.) If the answer to the question in 1.) is yes, then an interested party (those affected by the action) can request review and reconsideration from the Wage and Hour Administrator (See 29 CFR Part 1.8 and 29 CFR Part 7). Write to:

Wage and Hour Administrator
U.S. Department of Labor
200 Constitution Avenue, N.W.
Washington, DC 20210

The request should be accompanied by a full statement of the interested party's position and by any information (wage payment data, project description, area practice material, etc.) that the requestor considers relevant to the issue.

3.) If the decision of the Administrator is not favorable, an interested party may appeal directly to the Administrative Review Board (formerly the Wage Appeals Board). Write to:

Administrative Review Board
U.S. Department of Labor
200 Constitution Avenue, N.W.
Washington, DC 20210

4.) All decisions by the Administrative Review Board are final.

==========

END OF GENERAL DECISION
"

(NO TEXT ON THIS PAGE)

Department of Design and Construction

INFRASTRUCTURE DIVISION

BUREAU OF DESIGN

VOLUME 3 OF 3

PROJECT ID: SANDRESM1

INSTALLATION OF EAST SIDE COASTAL RESILIENCY FROM MONTGOMERY STREET TO EAST 15TH STREET

TOGETHER WITH ALL WORK INCIDENTAL THERETO

INCLUDING FLOOD PROTECTION SYSTEM, ROLLER AND SWING GATES, PARK RECONSTRUCTION, SEWER, PEDESTRIAN BRIDGES, PARK, BUILDINGS, GROUND IMPROVEMENT, STREET LIGHTING AND TRAFFIC WORK

Together With All Work Incidental Thereto

BOROUGH OF MANHATTAN

CITY OF NEW YORK