CITY OF NEW YORK
DEPARTMENT OF DESIGN AND CONSTRUCTION
DIVISION OF INFRASTRUCTURE
VOLUME 1 – BID BOOKLET

TABLE OF CONTENTS

Introduction 2

Bid Submission Requirements 3

Notices to Bidders 4

- Pre Bid Questions (PBQs) 4
- NYC Contract Financing Loan Fund 4

M/WBE Notice to Prospective Contractors 5

Affirmation 13

Bid Schedule 15

Pre-Award Process 17

Project References 19

- A. Contracts completed by the bidder 19
- B. Contracts currently under construction by the bidder 20
- C. Pending contracts not yet started by the bidder 21

Introduction

This Bid Booklet is intended to provide general information necessary for bidding on a DDC public works project and is part of the Contract Documents, as per Article 1.1 of the Standard Construction Contract.

As this contract is solicited via the PASSPort system, the bidder will be required to complete all of the PASSPort forms and questionnaires. These forms and questionnaires, along with the bidder's responses, will become part of the Bid Booklet.

Additional information on the PASSPort system can be found at the following website:
https://www1.nyc.gov/site/mocs/systems/passport-user-materials.page

Bid Submission Requirements

THE FOLLOWING MUST BE COMPLETED AND SUBMITTED FOR THE BID TO BE CONSIDERED RESPONSIVE:

1. Completed electronic bid submission in PASSPort;
    a. All required fields in PASSPort must be completed.
2. Bid security, if required.
    a. If Bid security is in a form of a bid bond, bidders must include it with their electronic PASSPort submission.
    b. If Bid security is in a form of a certified check, bidders must hand deliver the certified check.

BIDDERS ARE ADVISED THAT PAPER BID SUBMISSIONS WILL BE DEEMED NON-RESPONSIVE. BIDDERS MUST SUBMIT THEIR BIDS ELECTRONICALLY IN PASSPORT AND PROVIDE THE BID SECURITY FOR THE BID TO BE CONSIDERED RESPONSIVE.

THE FOLLOWING MAY RESULT IN THE BID BEING FOUND NON-RESPONSIVE:

1. Failure to upload required files or documents as part of a mandatory PASSPort Questionnaire response.
2. Uploading an incorrect file as part of a mandatory PASSPort Questionnaire response.

Notices to Bidders

Pre Bid Questions (PBQs)

Please be advised that PBQs must be submitted to the Agency Contact Person via PASSPort (in the RFx Discussions with buyer section) within the timeframe indicated in the PASSPort procurement.

NYC Contract Financing Loan Fund

If your business is working as a prime or subcontractor on a project with a City agency or City-funded entity, you may be eligible for a Contract Financing Loan from a participating lender coordinated with the NYC Department of Small Business Services (SBS). Loan repayment terms align with the contract payment schedule.

For more information: Call 311 or visit https://www1.nyc.gov/nycbusiness/article/contract-financing-loan-fund

M/WBE Notice to Prospective Contractors

PARTICIPATION BY MINORITY-OWNED AND WOMEN-OWNED BUSINESS ENTERPRISES IN CITY PROCUREMENT (9/2020 version)

ARTICLE I. M/WBE PROGRAM

Section 6-129 of the Administrative Code of the City of New York ("Section 6-129") establishes the program for participation in City procurement ("M/WBE Program") by minority-owned business enterprises ("MBEs") and women-owned business enterprises ("WBEs"), certified in accordance with Section 1304 of the New York City Charter. As stated in Section 6-129, the intent of the program is to address the impact of discrimination on the City's procurement process, and to promote the public interest in avoiding fraud and favoritism in the procurement process, increasing competition for City business, and lowering contract costs. The contract provisions contained herein are pursuant to Section 6-129, and the rules of the Department of Small Business Services ("DSBS") promulgated thereunder.

If this Contract is subject to the M/WBE Program established by Section 6-129, the specific requirements of MBE and/or WBE participation for this Contract are set forth in Schedule B of the Contract (entitled the "M/WBE Utilization Plan") and are detailed below. Contracts solicited through the Procurement and Sourcing Solutions Portal (PASSPort) will contain a Schedule B in the format outlined in the Schedule B – M/WBE Utilization Plan & PASSPort rider. The provisions of this notice will apply to contracts subject to the M/WBE Program established by Section 6-129 regardless of solicitation source.

The Contractor must comply with all applicable MBE and WBE requirements for this Contract.

All provisions of Section 6-129 are hereby incorporated in the Contract by reference and all terms used herein that are not defined herein shall have the meanings given such terms in Section 6-129.

References to MBEs or WBEs shall also include such businesses certified pursuant to the executive law where credit is required by section 311 of the New York City Charter or other provision of law.

Article I, Part A, below, sets forth provisions related to the participation goals for construction, standard and professional services contracts.

Article I, Part B, below, sets forth miscellaneous provisions related to the M/WBE Program.

PART A

PARTICIPATION GOALS FOR CONSTRUCTION, STANDARD

AND PROFESSIONAL SERVICES CONTRACTS OR TASK ORDERS

1. The **MBE and/or WBE Participation Goals** established for this Contract or Task Orders issued pursuant to this Contract, ("**Participation Goals**"), as applicable, are set forth on Schedule B, Part 1 to this Contract (see Page 1, Line 1 Total Participation Goals) or will be set forth on Schedule B, Part 1 to Task Orders issued pursuant to this Contract, as applicable.

The **Participation Goals** represent a percentage of the total dollar value of the Contract or Task Order, as applicable, that may be achieved by awarding subcontracts to firms certified with DSBS as MBEs and/or WBEs, and/or by crediting the participation of prime contractors and/or qualified joint ventures as provided in Section 3 below, unless the goals have been waived or modified by Agency in accordance with Section 6-129 and Part A, Sections 10 and 11 below, respectively.

2. If **Participation Goals** have been established for this Contract or Task Orders issued pursuant to this Contract, Contractor agrees or shall agree as a material term of the Contract that Contractor shall be subject to the **Participation Goals**, unless the goals are waived or modified by Agency in accordance with Section 6-129 and Part A, Sections 10 and 11 below, respectively.

3. If **Participation Goals** have been established for this Contract or Task Order issued pursuant to this Contract, a Contractor that is an MBE and/or WBE shall be permitted to count its own participation toward fulfillment of the relevant **Participation Goal**, provided that in accordance with Section 6-129 the value of Contractor's participation shall be determined by subtracting from the total value of the Contract or Task Order, as applicable, any amounts that the Contractor pays to direct subcontractors (as defined in Section 6-129(c)(13)), and provided further that a Contractor that is certified as both an MBE and a WBE may count its own participation either toward the goal for MBEs or the goal for WBEs, but not both.

A Contractor that is a qualified joint venture (as defined in Section 6-129(c)(30)) shall be permitted to count a percentage of its own participation toward fulfillment of the relevant **Participation Goal**. In accordance with Section 6-129, the value of Contractor's participation shall be determined by subtracting from the total value of the Contract or Task Order, as applicable, any amounts that Contractor pays to direct subcontractors, and then multiplying the remainder by the percentage to be applied to total profit to determine the amount to which an MBE or WBE is entitled pursuant to the joint venture agreement, provided that where a participant in a joint venture is certified as both an MBE and a WBE, such amount shall be counted either toward the goal for MBEs or the goal for WBEs, but not both.

4. A. If **Participation Goals** have been established for this Contract, a prospective contractor shall be required to submit with its bid or proposal, as applicable, a completed Schedule B, M/WBE Utilization Plan, Part 2 (see Pages1-2) indicating: (a) whether the contractor is an MBE or WBE, or qualified joint venture; (b) the percentage of work it intends to award to direct subcontractors; (c) in cases where the contractor intends to award direct subcontracts, a description of the type and dollar value of work designated for participation by MBEs and/or WBEs, and the time frames in which such work is scheduled to begin and end; as well as the name, addresses, and telephone numbers of the M/WBE subcontractors if required by the solicitation; and (d) the prospective contractor's required certification and affirmations. In the event that this M/WBE Utilization Plan indicates that the bidder or proposer, as applicable, does not intend to meet the **Participation Goals**, the bid or proposal, as applicable, shall be deemed non-responsive, unless Agency has granted the bidder or proposer, as applicable, a pre-award waiver of the **Participation Goals** in accordance with Section 6-129 and Part A, Section 10 below.

B. (i) If this Contract is for a master services agreement or other requirements type contract that will result in the issuance of Task Orders that will be individually registered ("Master Services Agreement") and is subject to M/WBE **Participation Goals**, a prospective contractor shall be required to submit with its bid or proposal, as applicable, a completed Schedule B, M/WBE Participation Requirements for Master Services Agreements That Will Require Individually Registered Task Orders, Part 2 (page 2) indicating the prospective contractor's certification and required affirmations to make all reasonable good faith efforts to meet participation goals established on each individual Task Order issued pursuant to this Contract, or if a partial waiver is obtained or such goals are modified by the Agency, to meet the modified **Participation Goals** by soliciting and obtaining the participation of certified MBE and/or WBE firms. In the event that the Schedule B indicates that the bidder or proposer, as applicable, does not intend to meet the **Participation Goals** that may be established on Task Orders issued pursuant to this Contract, the bid or proposal, as applicable, shall be deemed non-responsive.

(ii) **Participation Goals** on a Master Services Agreement will be established for individual Task Orders issued after the Master Services Agreement is awarded. If **Participation Goals** have been established on a Task Order, a contractor shall be required to submit a Schedule B – M/WBE Utilization Plan For Independently Registered Task Orders That Are Issued Pursuant to Master Services Agreements, Part 2 (see Pages 1-2) indicating: (a) whether the contractor is an MBE or WBE, or qualified joint venture; (b) the percentage of work it intends to award to direct subcontractors; (c) in cases where the contractor intends to award direct subcontracts, a description of the type and dollar value of work designated for participation by MBEs and/or WBEs, and the time frames in which such work is scheduled to begin and end; as well as the name, addresses, and telephone numbers of the M/WBE subcontractors if required by the solicitation; and (d) the prospective contractor's required certification and affirmations. The contractor must engage in good faith efforts to meet the **Participation Goals** as established for the Task Order unless Agency has granted the contractor a pre-award waiver of the **Participation Goals** in accordance with Section 6-129 and Part A, Section 10 below.

C. THE BIDDER/PROPOSER MUST COMPLETE THE SCHEDULE B INCLUDED HEREIN (SCHEDULE B, PART 2). A SCHEDULE B SUBMITTED BY THE BIDDER/PROPOSER WHICH DOES NOT INCLUDE THE VENDOR CERTIFICATION AND REQUIRED AFFIRMATIONS WILL BE DEEMED TO BE NON-RESPONSIVE, UNLESS A FULL WAIVER OF THE PARTICIPATION GOALS IS GRANTED (SCHEDULE B, PART 3). IN THE EVENT THAT THE CITY DETERMINES THAT THE BIDDER/PROPOSER HAS SUBMITTED A SCHEDULE B WHERE THE VENDOR CERTIFICATION AND REQUIRED AFFIRMATIONS ARE COMPLETED BUT OTHER ASPECTS OF THE SCHEDULE B ARE NOT COMPLETE, OR CONTAIN A COPY OR COMPUTATION ERROR THAT IS AT ODDS WITH THE VENDOR CERTIFICATION AND AFFIRMATIONS, THE BIDDER/PROPOSER WILL BE NOTIFIED BY THE AGENCY AND WILL BE GIVEN FOUR (4) CALENDAR DAYS FROM RECEIPT OF NOTIFICATION TO CURE THE SPECIFIED DEFICIENCIES AND RETURN A COMPLETED SCHEDULE B TO THE AGENCY. FAILURE TO DO SO WILL RESULT IN A DETERMINATION THAT THE BID/PROPOSAL IS NON-RESPONSIVE. RECEIPT OF NOTIFICATION IS DEFINED AS THE DATE NOTICE IS E-MAILED OR FAXED (IF THE BIDDER/PROPOSER HAS PROVIDED AN E-MAIL ADDRESS OR FAX NUMBER), OR NO LATER THAN FIVE (5) CALENDAR DAYS FROM THE DATE OF MAILING OR UPON DELIVERY, IF DELIVERED.

5. Where an **M/WBE** Utilization Plan has been submitted, the Contractor shall, within 30 days of issuance by Agency of a notice to proceed, submit a list of proposed persons or entities to which it intends to award subcontracts within the subsequent 12 months. In the case of multi-year contracts, such list shall also be submitted every year thereafter. The Agency may also require the Contractor to report periodically about the contracts awarded by its direct subcontractors to indirect subcontractors (as defined in Section 6-129(c)(22)). **PLEASE NOTE: If this Contract is a public works project subject to GML §101(5) (i.e., a contract valued at or below $3M for projects in New York City) or if the Contract is subject to a project labor agreement in accordance with Labor Law §222, and the bidder is required to identify at the time of bid submission its intended subcontractors for the Wicks trades (plumbing and gas fitting; steam heating, hot water heating, ventilating and air conditioning (HVAC); and electric wiring), the Contractor must identify all those to which it intends to award construction subcontracts for any portion of the Wicks trade work at the time of bid submission, regardless of what point in the life of the contract such subcontracts will occur. In identifying intended subcontractors in the bid submission, bidders may satisfy any Participation Goals established for this Contract by proposing one or more subcontractors that are MBEs and/or WBEs for any portion of the Wicks trade work.** In the event that the Contractor's selection of a subcontractor is disapproved, the Contractor shall have a reasonable time to propose alternate subcontractors.

6. MBE and WBE firms must be certified by DSBS in order for the Contractor to credit such firms' participation toward the attainment of the **Participation Goals**. Such certification must occur prior to the firms' commencement of work. A list of city-certified MBE and WBE firms may be obtained from the DSBS

website at www.nyc.gov/buycertified, by emailing DSBS at buyer@sbs.nyc.gov, by calling (212) 513-6451, or by visiting or writing DSBS at One Liberty Plaza, New York, New York, 10006, 11th floor. Eligible firms that have not yet been certified may contact DSBS in order to seek certification by visiting www.nyc.gov/getcertified, emailing MWBE@sbs.nyc.gov, or calling the DSBS certification helpline at (212) 513-6311. A firm that is certified as both an MBE and a WBE may be counted either toward the goal for MBEs or the goal for WBEs, but not both. No credit shall be given for participation by a graduate MBE or graduate WBE, as defined in Section 6-129(c)(20).

7. Where an **M/WBE** Utilization Plan has been submitted, the Contractor shall, with each voucher for payment, and/or periodically as Agency may require, submit statements, certified under penalty of perjury, which shall include, but not be limited to,: the total amount the Contractor paid to its direct subcontractors, and, where applicable pursuant to Section 6-129(j), the total amount direct subcontractors paid to indirect subcontractors; the names, addresses and contact numbers of each MBE or WBE hired as a subcontractor by the Contractor, and, where applicable, hired by any of the Contractor's direct subcontractors; and the dates and amounts paid to each MBE or WBE. The Contractor shall also submit, along with its voucher for final payment: the total amount it paid to subcontractors, and, where applicable pursuant to Section 6-129(j), the total amount its direct subcontractors paid directly to their indirect subcontractors; and a final list, certified under penalty of perjury, which shall include the name, address and contact information of each subcontractor that is an MBE or WBE, the work performed by, and the dates and amounts paid to each.

8. If payments made to, or work performed by, MBEs or WBEs are less than the amount specified in the Contractor's **M/WBE** Utilization Plan, Agency shall take appropriate action, in accordance with Section 6-129 and Article II below, unless the Contractor has obtained a modification of its **M/WBE** Utilization Plan in accordance with Section 6-129 and Part A, Section 11 below.

9. Where an **M/WBE** Utilization Plan has been submitted, and the Contractor requests a change order the value of which exceeds the greater of 10 percent of the Contract or Task Order, as applicable, or $500,000, Agency shall review the scope of work for the Contract or Task Order, as applicable, and the scale and types of work involved in the change order, and determine whether the **Participation Goals** should be modified.

10. Pre-award waiver of **the Participation Goals**.

(a) A bidder or proposer, or contractor with respect to a Task Order, may seek a pre-award full or partial waiver of the Participation Goals in accordance with Section 6-129, which requests that Agency change one or more **Participation Goals** on the grounds that the **Participation Goals** are unreasonable in light of the availability of certified firms to perform the services required, or by demonstrating that it has legitimate business reasons for proposing a lower level of subcontracting in its M/WBE Utilization Plan.

(b) To apply for a full or partial waiver of the **Participation Goals**, a bidder, proposer, or contractor, as applicable, must complete Part 3 of Schedule B **and submit such request no later than seven (7) calendar days prior to the date and time the bids, proposals, or Task Orders are due, in writing to the Agency by email at MWBEModification@ddc.nyc.gov**. **Full or partial waiver requests that are received later than seven (7) calendar days prior to the date and time the bids, proposals, or Task Orders are due may be rejected as untimely**. Bidders, proposers, or contractors, as applicable, who have submitted timely requests will receive an Agency response by no later than two (2) calendar days prior to the due date for bids, proposals, or Task Orders; provided, however, that if that date would fall on a weekend or holiday, an Agency response will be provided by close-of-business on the business day before such weekend or holiday date.

(c) If the Agency determines that the **Participation Goals** are unreasonable in light of the availability of certified firms to perform the services required, it shall revise the solicitation and extend the deadline for bids and proposals, or revise the Task Order, as applicable.

(d) Agency may grant a full or partial waiver of the **Participation Goals** to a bidder, proposer or contractor, as applicable, who demonstrates—before submission of the bid, proposal or Task Order, as applicable—that it has legitimate business reasons for proposing the level of

subcontracting in its **M/WBE** Utilization Plan. In making its determination, Agency shall consider factors that shall include, but not be limited to, whether the bidder, proposer or contractor, as applicable, has the capacity and the bona fide intention to perform the Contract without any subcontracting, or to perform the Contract without awarding the amount of subcontracts represented by the **Participation Goals**. In making such determination, Agency may consider whether the **M/WBE** Utilization Plan is consistent with past subcontracting practices of the bidder, proposer or contractor, as applicable, whether the bidder, proposer or contractor, as applicable, has made efforts to form a joint venture with a certified firm, and whether the bidder, proposer, or contractor, as applicable, has made good faith efforts to identify other portions of the Contract that it intends to subcontract.

11. Modification of **M/WBE** Utilization Plan. (a) A Contractor may request a modification of its **M/WBE** Utilization Plan after award of this Contract. **PLEASE NOTE: If this Contract is a public works project subject to GML §101(5) (i.e., a contract valued at or below $3M for projects in New York City) or if the Contract is subject to a project labor agreement in accordance with Labor Law §222, and the bidder is required to identify at the time of bid submission its intended subcontractors for the Wicks trades (plumbing and gas fitting; steam heating, hot water heating, ventilating and air conditioning (HVAC); and electric wiring), the Contractor may request a Modification of its M/WBE Utilization Plan as part of its bid submission.** The Agency may grant a request for Modification of a Contractor's **M/WBE** Utilization Plan if it determines that the Contractor has established, with appropriate documentary and other evidence, that it made reasonable, good faith efforts to meet the **Participation Goals**. In making such determination, Agency shall consider evidence of the following efforts, as applicable, along with any other relevant factors:

(i) The Contractor advertised opportunities to participate in the Contract, where appropriate, in general circulation media, trade and professional association publications and small business media, and publications of minority and women's business organizations;

(ii) The Contractor provided notice of specific opportunities to participate in the Contract, in a timely manner, to minority and women's business organizations;

(iii) The Contractor sent written notices, by certified mail or facsimile, in a timely manner, to advise MBEs or WBEs that their interest in the Contract was solicited;

(iv) The Contractor made efforts to identify portions of the work that could be substituted for portions originally designated for participation by MBEs and/or WBEs in the **M/WBE** Utilization Plan, and for which the Contractor claims an inability to retain MBEs or WBEs;

(v) The Contractor held meetings with MBEs and/or WBEs prior to the date their bids or proposals were due, for the purpose of explaining in detail the scope and requirements of the work for which their bids or proposals were solicited;

(vi) The Contractor made efforts to negotiate with MBEs and/or WBEs as relevant to perform specific subcontracts, or act as suppliers or service providers;

(vii) Timely written requests for assistance made by the Contractor to Agency's M/WBE liaison officer and to DSBS;

(viii) Description of how recommendations made by DSBS and Agency were acted upon and an explanation of why action upon such recommendations did not lead to the desired level of participation of MBEs and/or WBEs.

Agency's M/WBE officer shall provide written notice to the Contractor of the determination.

(b) The Agency may modify the **Participation Goals** when the scope of the work has been changed by the Agency in a manner that affects the scale and types of work that the Contractor indicated in its **M/WBE Utilization Plan** would be awarded to subcontractors.

12. If the Contractor was required to identify in its bid or proposal the MBEs and/or WBEs they intended to use in connection with the performance of the Contract or Task Order, substitutions to the identified firms may only be made with the approval of the Agency, which shall only be given when the Contractor has proposed to use a firm that would satisfy the **Participation Goals** to the same extent as the firm previously identified, unless the Agency determines that the Contractor has established, with appropriate documentary and other evidence, that it made reasonable, good faith efforts. In making such determination, the Agency shall require evidence of the efforts listed in Section 11(a) above, as applicable, along with any other relevant factors.

13. If this Contract is for an indefinite quantity of construction, standard or professional services or is a requirements type contract and the Contractor has submitted an **M/WBE** Utilization Plan and has committed to subcontract work to MBEs and/or WBEs in order to meet the **Participation Goals**, the Contractor will not be deemed in violation of the M/WBE Program requirements for this Contract with regard to any work which was intended to be subcontracted to an MBE and/or WBE to the extent that the Agency has determined that such work is not needed.

14. If **Participation Goals** have been established for this Contract or a Task Order issued pursuant to this Contract, at least once annually during the term of the Contract or Task Order, as applicable, Agency shall review the Contractor's progress toward attainment of its **M/WBE** Utilization Plan, including but not limited to, by reviewing the percentage of work the Contractor has actually awarded to MBE and/or WBE subcontractors and the payments the Contractor made to such subcontractors.

15. If **Participation Goals** have been established for this Contract or a Task Order issued pursuant to this Contract, Agency shall evaluate and assess the Contractor's performance in meeting those goals, and such evaluation and assessment shall become part of the Contractor's overall contract performance evaluation.

PART B

MISCELLANEOUS

1. The Contractor shall take notice that, if this solicitation requires the establishment of a **M/WBE** Utilization Plan, the resulting contract may be audited by DSBS to determine compliance with Section 6-129. See §6-129(e)(10). Furthermore, such resulting contract may also be examined by the City's Comptroller to assess compliance with the **M/WBE** Utilization Plan.

2. Pursuant to DSBS rules, construction contracts that include a requirement for a **M/WBE** Utilization Plan shall not be subject to the law governing Locally Based Enterprises set forth in Section 6-108.1 of the Administrative Code of the City of New York.

3. DSBS is available to assist contractors and potential contractors in determining the availability of MBEs and/or WBEs to participate as subcontractors, and in identifying opportunities that are appropriate for participation by MBEs and/or WBEs in contracts.

4. Prospective contractors are encouraged to enter into qualified joint venture agreements with MBEs and/or WBEs as defined by Section 6-129(c)(30).

5. By submitting a bid or proposal the Contractor hereby acknowledges its understanding of the M/WBE Program requirements set forth herein and the pertinent provisions of Section 6-129, and any rules promulgated thereunder, and if awarded this Contract, the Contractor hereby agrees to comply with the M/WBE Program requirements of this Contract and pertinent provisions of Section 6-129, and any rules promulgated thereunder, all of which shall be deemed to be material terms of this Contract. The Contractor hereby agrees to make all reasonable, good faith efforts to solicit and obtain the participation of MBEs and/or WBEs to meet the required **Participation Goals**.

ARTICLE II. ENFORCEMENT

1. If Agency determines that a bidder or proposer, as applicable, has, in relation to this procurement, violated Section 6-129 or the DSBS rules promulgated pursuant to Section 6-129, Agency may disqualify such bidder or proposer, as applicable, from competing for this Contract and the Agency may revoke such bidder's or proposer's prequalification status, if applicable.

2. Whenever Agency believes that the Contractor or a subcontractor is not in compliance with Section 6-129 or the DSBS rules promulgated pursuant to Section 6-129, or any provision of this Contract that implements Section 6-129, including, but not limited to any **M/WBE** Utilization Plan, Agency shall send a written notice to the Contractor describing the alleged noncompliance and offering the Contractor an opportunity to be heard. Agency shall then conduct an investigation to determine whether such Contractor or subcontractor is in compliance.

3. In the event that the Contractor has been found to have violated Section 6-129, the DSBS rules promulgated pursuant to Section 6-129, or any provision of this Contract that implements Section 6-129, including, but not limited to, any **M/WBE** Utilization Plan, Agency may determine that one of the following actions should be taken:

(a) entering into an agreement with the Contractor allowing the Contractor to cure the violation;

(b) revoking the Contractor's pre-qualification to bid or make proposals for future contracts;

(c) making a finding that the Contractor is in default of the Contract;

(d) terminating the Contract;

(e) declaring the Contractor to be in breach of Contract;

(f) withholding payment or reimbursement;

(g) determining not to renew the Contract;

(h) assessing actual and consequential damages;

(i) assessing liquidated damages or reducing fees, provided that liquidated damages may be based on amounts representing costs of delays in carrying out the purposes of the M/WBE Program, or in meeting the purposes of the Contract, the costs of meeting utilization goals through additional

procurements, the administrative costs of investigation and enforcement, or other factors set forth in the Contract;

(j) exercising rights under the Contract to procure goods, services or construction from another contractor and charge the cost of such contract to the Contractor that has been found to be in noncompliance; or

(k) taking any other appropriate remedy.

4. If an **M/WBE** Utilization Plan has been submitted, and pursuant to this Article II, Section 3, the Contractor has been found to have failed to fulfill its **Participation Goals** contained in its **M/WBE** Utilization Plan or the **Participation Goals** as modified by Agency pursuant to Article I, Part A, Section 11, Agency may assess liquidated damages in the amount of ten percent (10%) of the difference between the dollar amount of work required to be awarded to MBE and/or WBE firms to meet the **Participation Goals** and the dollar amount the Contractor actually awarded and paid, and/or credited, to MBE and/or WBE firms. In view of the difficulty of accurately ascertaining the loss which the City will suffer by reason of Contractor's failure to meet the **Participation Goals**, the foregoing amount is hereby fixed and agreed as the liquidated damages that the City will suffer by reason of such failure, and not as a penalty. Agency may deduct and retain out of any monies which may become due under this Contract the amount of any such liquidated damages; and in case the amount which may become due under this Contract shall be less than the amount of liquidated damages suffered by the City, the Contractor shall be liable to pay the difference.

5. Whenever Agency has reason to believe that an MBE and/or WBE is not qualified for certification, or is participating in a contract in a manner that does not serve a commercially useful function (as defined in Section 6-129(c)(8)), or has violated any provision of Section 6-129, Agency shall notify the Commissioner of DSBS who shall determine whether the certification of such business enterprise should be revoked.

6. Statements made in any instrument submitted to Agency pursuant to Section 6-129 shall be submitted under penalty of perjury and any false or misleading statement or omission shall be grounds for the application of any applicable criminal and/or civil penalties for perjury. The making of a false or fraudulent statement by an MBE and/or WBE in any instrument submitted pursuant to Section 6-129 shall, in addition, be grounds for revocation of its certification.

7. The Contractor's record in implementing its **M/WBE** Utilization Plan shall be a factor in the evaluation of its performance. Whenever Agency determines that a Contractor's compliance with an **M/WBE** Utilization Plan has been unsatisfactory, Agency shall, after consultation with the City Chief Procurement Officer, file an advice of caution form for inclusion in PASSPort as caution data.

Affirmation

The Bidder affirms and declares:

1. The said bidder is of lawful age and the only one interested in this bid; and no person, firm or corporation other than hereinbefore named has any interest in this bid, or in the Contract proposed to be taken.

2. By submission of this bid, each bidder and each person signing on behalf of any bidder certifies, and in the case of a joint bid each party thereto certifies as to its own organization, under penalty of perjury, that to the best of its knowledge and belief: (1) the prices in this bid have been arrived at independently without collusion, consultation, communication or agreement, for the purpose of restricting competition, as to any matter relating to such prices with any other bidder or with any competitor; (2) unless otherwise required by law, the prices quoted in this bid have not been knowingly disclosed by the bidder and will not knowingly be disclosed by the bidder prior to opening, directly or indirectly, to any other bidder or to any competitor; and (3) no attempt has been made or will be made by the bidder to induce any other person, partnership or corporation to submit or not to submit a bid for the purpose of restricting competition.

3. No councilman or other officer or employee or person whose salary is payable in whole or in part from the City Treasury is directly or indirectly interested in this bid, or in the supplies, materials, equipment, work or labor to which it relates, or in any of the profits thereof.

4. The bidder is not in arrears to the City of New York upon debt or contract or taxes, and is not a defaulter, as surety or otherwise, upon any obligation of the City of New York, and has not been declared not responsible, or disqualified, by any agency of the City of New York or State of New York, nor is there any proceeding pending relating to the responsibility or qualification of the bidder to receive public contracts except as set forth on the Affirmation included as disclosed in PASSPort.

5. The bidder hereby affirms that is has paid all applicable City income, excise and other taxes for all it has conducted business activities in New York City.

6. The bidder, as an individual, or as a member, partner, director or officer of the bidder, if the same be a firm, partnership or corporation, executes this document expressly warranting and representing that should this bid be accepted by the City and the Contract awarded to him, he and his subcontractors engaged in the performance:

   (1) will comply with the provisions of Section 6-108 of the Administrative Code of the City of New York and the non-discrimination provisions of Section 220a of the New York State Labor Law, as more expressly and in detail set forth in the Agreement; (2) will comply with Section 6-109 of the Administrative Code of the City of New York in relation to minimum wages and other stipulations as more expressly and in detail set forth in the Agreement; (3) have complied with the provisions of the aforesaid laws since their respective effective dates, and (4) will post notices to be furnished by the City, setting forth the requirements of the aforesaid laws in prominent and conspicuous places in each and every plant, factory, building and structure where employees engaged in the performance of the Contract can readily view it, and will continue to keep such notices posted until the supplies, materials and equipment, or work labor and services required to be furnished or rendered by the Contractor have been finally accepted by the City. In the event of any breach or violation of the foregoing, the Contractor may be subject to damages, liquidated or otherwise, cancellation of the Contract and suspension as a

bidder for a period of three years. (The words, "the bidder", "he", "his", and "him" where used shall mean the individual bidder, firm, partnership or corporation executing this bid).

7. Compliance Report

   The bidder, as an individual, or as a member, partner, director, or officer of the bidder, if the same be a firm, partnership, or corporation, (1) represents that his attention has been specifically drawn to Executive Order No. 50, dated April 25, 1980, on Equal Employment Compliance of the contract, and (2) warrants that he will comply with the provisions of Executive Order No. 50. The Employment Report must be submitted as part of the bid.

8. The bidder, as an individual, or as a member, partner, director, or officer of the bidder, if the same be a firm, partnership, or corporation, executes this document expressly warranting that he will comply with: (1) the provision of the contract on providing records, Chapter 8.

9. By submission of this bid, the bidder certifies that it now has and will continue to have the financial capability to fully perform the work required for this contract. Any award of this contract will be made in reliance upon such certification. Upon request therefor, the bidder will submit written verification of such financial capability in a form that is acceptable to the department.

10. In accordance with Section 165 of the State Finance Law, the bidder agrees that tropical hardwoods, as defined in Section 165 of the State Finance Law, shall not be utilized in the performance of this Contract, except as the same are permitted by the foregoing provision of law.

11. The bidder has visited and examined the site of the work and has carefully examined the Contract in the form approved by the Corporation Counsel, and will execute the Contract and perform all its items, covenants and conditions, and will provide, furnish and deliver all the work, materials, supplies, tools and appliances for all labor and materials necessary or required for the hereinafter named work, all in strict conformity with the Contract, for the prices set forth in the Bid Schedule.

12. M/WBE UTILIZATION PLAN: By signing its bid, the bidder agrees to the M/WBE Vendor Certification and Required Affirmations set forth below, unless a full waiver of the Participation Goals is granted.

    I hereby:

    1) acknowledge my understanding of the M/WBE participation requirements as set forth in this Contract and the pertinent provisions of Section 6-129 of the Administrative Code of the City of New York and the rules promulgated thereunder;

    2) affirm that the information supplied in support of the M/WBE Utilization Plan is true and correct;

    3) agree, if awarded this Contract, to comply with the M/WBE participation requirements of this Contract, the pertinent provisions of Section 6-129, and the rules promulgated thereunder, all of which shall be deemed to be material terms of this Contract;

    4) agree and affirm that it is a material term of this Contract that the Vendor will award the total dollar value of the M/WBE Participation Goals to certified MBEs and/or WBEs, unless a full waiver is obtained or such goals are modified by the Agency; and

    agree and affirm, if awarded this Contract, to make all reasonable, good faith efforts to meet the M/WBE Participation Goals, or If a partial waiver is obtained or such goals are modified by the Agency, to meet the modified Participation Goals by soliciting and obtaining the participation of certified MBE and/or WBE firms.

Bid Schedule

The Questionnaire in the PASSPort system contains the Bid Schedule. Items listed in the Bid Schedule shall comply with the requirements of the corresponding sections of the specifications detailed in the table below. All references to the Standard Specifications, Details, Standards and Drawings shall be to the version in effect at the time of bid.

NOTES:

- "XXX" in the table below signifies any possible combination of characters and spaces.
- The table below may contain item formats which are not included in the Bid Schedule.
  Please refer to the Bid Schedule to determine which specifications apply.

Item Number Format	Applicable Specifications
4.XXX 6.XXX 7.XXX 8.XXX *(Except 8.01 XXX; see below)* 9.XXX HW-XXX	NYC Department of Transportation ("DOT") Standard Highway Specifications, as amended in the R-Pages, located in Volume 3 of 3 herein; ***AND*** NYC DOT Standard Details of Construction; ***OR,*** ***if the item is not contained within the Standard Specifications***, then see the applicable New Sections in the I-Pages, located in Volume 3 of 3 herein.
1.XXX 50.XXX through 55.XXX 60.XXX through 66.XXX 70.XXX through 79.XXX *(Except 79.11XXX; see below)* DSS XXX DSW XXX	NYC Department of Environmental Protection ("DEP") Standard Sewer and Water Main Specifications, as amended in the R-Pages and SW-Pages, located in Volume 3 of 3 herein; ***AND*** NYC DEP Specifications for Trunk Main Work; ***AND*** NYC DEP Sewer Design Standards; ***AND*** NYC DEP Water Main Standard Drawings; ***OR,*** ***if the item is not contained within the Standard Specifications,*** then see the Amendments to the Standard Sewer and Water Main Specifications in the SW-Pages, located in Volume 3 of 3 herein.
GI-XXX PM-XXX ROW XXX	New Sections in the I-Pages, located in Volume 3 of 3 herein ***AND*** NYC DEP Standards for Green Infrastructure.

Item Number Format	Applicable Specifications
UTL-XXX	Gas Cost Sharing Standard Specifications in the EP7-Pages, located in Volume 3 of 3 herein.
83X.XXX MX.XXX MP XXX NYC-XXX NYCT-XXX NYPD-XXX P XXX PK-XXX	New Sections in the I-Pages, located in Volume 3 of 3 herein.
BMP-XXX	Specifications for Construction of Best Management Practice (BMP) and Mitigation Area in the BMP-Pages, located in Volume 3 of 3 herein.
E XXX ME XXX	Specifications for the Specialty Electrical Works in the EL-Pages, located in Volume 3 of 3 herein.
SL-XXX	NYC DOT Division of Street Lighting Specifications ***AND*** NYC Division of Street Lighting Standard Drawings.
T-XXX	NYC DOT Specifications for Traffic Signals and Intelligent Transportation Systems ***AND*** NYC DOT Traffic Signal Standard Drawings.
JB XXX	Joint Bid Specifications in the JB-Pages, located in Volume 3 of 3 herein.
8.01 XXX	Specifications for Handling, Transportation and Disposal of Nonhazardous and Potentially Hazardous Contaminated Materials in the HAZ-Pages, located in Volume 3 of 3 herein.
67.XXX	Specifications for Abatement of Coal Tar Wrap Asbestos Containing Materials in the ASB-Pages, located in Volume 3 of 3 herein.
79.11XXX	Specifications for Abatement of Transit Authority Duct Insulation Asbestos Containing Materials in the ASB-Pages, located in Volume 3 of 3 herein.

Pre-Award Process

The bidder is advised that as part of the pre-award review of its bid, it may be required to submit the information described in Sections (A) through (D) below. If required, the bidder must submit such information within five (5) business days following receipt of notification from DDC that it is among the low bidders. Such notification from DDC will be by email and will specify the types of information which must be submitted directly to DDC.

In the event the bidder fails to submit the required information within the specified time frame, its bid may be rejected as nonresponsive.

****

(A) **Project Reference Form**: If required, the bidder must complete and submit the Project Reference Form set forth in this Bid Booklet. The Project Reference Form consists of 3 parts: (1) Contracts Completed by the Bidder, (2) Contracts Currently Under Construction by the Bidder, and (3) Pending Contracts Not Yet Started by the Bidder.

(B) **Copy of License**: If required, the bidder must submit a copy of the license under which the bidder will be performing the work. Such license must clearly show the following: (1) Name of the Licensee, (2) License Number, and (3) Expiration date of the License. A copy of the license will be required from bidders for the following contracts: Plumbing Work, Electrical Work and Asbestos Abatement.

(C) **Financial Information**: If required, the bidder must submit the financial information described below:

(1) Audited Financial Statements: Financial statements (Balance Sheet and Income Statement) of the entity submitting the bid, as audited by an independent auditor licensed to practice as a certified public accountant (CPA). Audited financial statements for the three most recent fiscal years must be submitted. Each such financial statement must include the auditor's standard report.

If the bidder does not have audited financial statements, it must submit an affidavit attesting to the fact that the bidder does not have such statements. In addition, the bidder must submit the following documentation covering the three most recent fiscal years: signed federal tax returns, unaudited financial statements, and a "certified review letter" from a certified public accountant (CPA) verifying the unaudited financial statements.

Unless the most recent audited or unaudited financial statement was issued within ninety (90) days, the bidder must submit interim financial information that includes data on financial position and results of operation (income data) for the current fiscal year. Such information may be summarized on a monthly or quarterly basis or at other intervals.

(2) Schedule of Aged Accounts Receivable, including portion due within ninety (90) days.

(D) **Project Specific Information**: If required, the bidder must submit the project specific information described below:

(1) Statement indicating the number of years of experience the bidder has had and in what type of construction.

(2) Resumes of all key personnel to be involved in the project, including the proposed project superintendent.

(3) List of significant pieces of equipment expected to be used for the contract, and whether such equipment is owned or leased.

(4) Description of work expected to be subcontracted, and to what firms, if known.

(5) List of key material suppliers.

(6) Preliminary bar chart time schedule

(7) Contractor's expected means of financing the project. This should be based on the assumption that the contractor is required to finance 2X average monthly billings throughout the contract period.

(8) Any other issues the contractor sees as impacting his ability to complete the project according to the contract.

In addition to the information described in Sections (A) through (D) above, the bidder shall submit such additional information as the Commissioner may require, including without limitation, an explanation or justification for specific unit price items.

The bidder is further advised that it may be required to attend a pre-award meeting with DDC representatives. If such a meeting is convened, the bidder will be advised as to any additional material to be provided.

Project References

A. Contracts completed by the bidder

List all contracts substantially completed within the last 4 years, up to a maximum of 10 projects, in descending order of date of substantial completion.

Project & Location	Project & Location	Contract Amount ($000)	Date Completed	Owner Reference & Tel. No.	Architect/Engineer Reference & Tel. No. (if different from owner)
SEQS24 Reconstruction of Existing Sewers, South Queens	Emergency Sewer	$10.2M±	3/25	NYCDDC/DEP	Michael Sullivan
BED819 Manhattan Beach Area, Brooklyn	Water mains, fire alarm, private utilities	$30.0M±	6/25	NYCDDC	Marie Brandao
RED388 Various locations, Brooklyn & Staten Island	Water mains	$7.7M±	6/23	NYCDDC	Adam Alweiss
QED1050 Various locations, Bronx & Queens	Water mains	$7M±	5/23	NYCDDC	Franco Mesiti
HWPR20Q1 Various locations, Queens	Pedestrian Ramps	$10.8M±	12/22	NYCDDC	Howard Jiang
HWK2013GB Gerritsen Beach Area Brooklyn	Storm and sanitary sewer, water mains	$2.4M±	12/22	NYCDDC Marie Brandao	Sub to Paul J. Scariano, Inc.
SEKBS8 Reconstruction of Existing Sewers, Brooklyn	Emergency Sewer	$7.8M±	6/22	NYCDDC/DEP	Michael Sullivan
SEQ002539 204th Street, Queens	Construction of storm and sanitary sewer, and installation of water mains, etc.	$8.3M±	1/21	NYCDDC	Sub to Paul J. Scariano, Inc.

SEQ200490 95th Street, Queens	Construction of storm sewer and water mains	$4M±	5/20	NYCDDC Bill Sifounious	Sub to Paul J. Scariano, Inc.
QED1047 Various Locations, Queens & Bronx	Installation of water mains	$2.5M±	4/20	NYCDDC	Sub to Paul J. Scariano, Inc.

B. Contracts currently under construction by the bidder

List all contracts currently under construction even if they are not similar to the contract being awarded.

Project & Location	Contract Type	Contract Amount ($000)	Date Scheduled to Completed	Subcontracted to Others ($000)	Uncompleted Portion	Owner Reference & Tel. No.	Architect/Engineer Reference & Tel. No. (if different from owner)
HWMWTCB6 Vesey St. Reconstruction Manhattan	Water mains, street lighting, private utilities	$6M±	6/26	$0.8M±	$2.7M±	NYCDDC Iyad Marzouq	N/A
SEK002383 Dean St, Brooklyn	Combined sewer, water mains, street lighting, private utilities	$16.2M±	6/27	$0.8M±	$7.4M±	NYCDDC Marie Brandao	N/A
LSLRPBX2 Various Locations, Bronx	Replacement of Lead service water lines	$10.6M±	2/26	$50K±	$9.0M±	DEP	
SAND 1048 Sunset Park North, Brooklyn	Reconstruction of Waterfront Greenway - roadway, sewers, and water main, etc.	$20.0M±	6/27	$2.0M±	$18.4M±	NYCDDC Marie Brandao	N/A
SEKS25 Reconstruction of Existing Sewers, South Brooklyn	Emergency Sewer	$10.4M±	4/26	$0.5M±	$8.1M±	NYCDDC/DEP	Michael Sullivan
4-42 26th Avenue Astoria, NY	Water, sanitary and storm sewer installation	$4.7M±	4/26	$0.0M±	$4.3M±	YNH Construction	Abe Smilowitz

C. Pending contracts not yet started by the bidder

List all contracts awarded to or won by the bidder but not yet started.

Project & Location	Contract Type	Contract Amount ($000)	Date Scheduled to Start	Owner Reference & Tel. No.	Architect/Engineer Reference & Tel. No. (if different from owner)
SEKS26 Reconstruction of Existing Sewers, South Brooklyn	Emergency Sewer	$8.1M±	TBD	NYCDDC/DEP	N/A

DeBoe Construction Corp.

325 Westbury Avenue
Carle Place, NY 11514
(516) 997-9615 (718) 341-6786

January 23, 2026

Anika Barrington
NYC Department of Design & Construction
30-30 Thomson Avenue, 1st Floor
Long Island City, NY 11101

RE: Project Specific Information
DDC Project # QED1063AC / 8502026B0023

Dear Anika Barrington,

DeBoe Construction Corp. (DeBoe) has been in business since July 1993 and has been actively installing sewer mains, water mains, and gas mains for the City of New York since July 1996. As the enclosed resume indicates, Christopher DeBonis (Owner/Supervisor) has 30± years of experience in the construction industry.

DeBoe anticipates utilizing the following pieces of machinery and equipment (all are owned):

- 1 Komatsu PC200
- 1 Komatsu PC238
- 2 Komatsu PC360
- 2 Caterpillar 938
- 2 Komatsu WA380
- 3 Caterpillar 450
- Sliderail System (600lf)
- 1 Vibratory Rollers (5ton)
- 4 Vibratory Rollers (1.5ton)
- 6 Tool Vans
- 4 6 Wheel Dump trucks w/ Compressors
- Air Compressors

Scopes of work such as Asphalt paving, Photography, Electrical, Environmental, and Arborist work are slated to be subcontracted.

Key material suppliers include:

- T. Mina Supply, Inc.
- Coastal Pipeline Products Corp. / Oldcastle Precast Corp.
- SRM Concrete / Best Concrete-Mix Corp
- Willets Point Asphalt / Flushing Asphalt

A preliminary schedule will be provided once there is a commence work date. The following is a preliminary sequence of work for this contract:

a. Sampling & Testing of contaminated soil
b. Mobilization
c. Tree Pruning
d. Utilities Work & Water Main installation
e. Curb installation
f. Street Light & Traffic Signal work
g. Sidewalk Installation
h. Concrete roadbase installation
i. Roadway final paving and pavement markings

DeBoe expects to finance the project by utilizing both working capital, highlighted by cash on hand and contract receivables, and the $3,000,000 Business Equity Credit Line with Flushing Bank.

Having worked hand in hand with this agency on multiple occasions and with five projects in progress, DeBoe emerges as the perfect candidate for this contract. Our impeccable track record, coupled with a reputation for delivering outstanding results, makes us highly qualified for this project. The Agency has had nothing but positive experiences with DeBoe, solidifying its standing as a contractor of the highest caliber.

Should you have any questions or require additional documentation, please do not hesitate to contact us.

Sincerely,

Mark Nowicki

Mark Nowicki
Chief Compliance Officer

QUALIFICATION FORM

Name of Contractor: DeBoe Construction Corp.

Name of Project: SEK002383 Combined Sewer Install & Water Main Replacement

Location of Project: Dean Street, Brooklyn

Owner or Owner's representative (Architect or Engineer) who is familiar with the work performed:

Name: NYCDDC Marie Brandao

Title: Borough Director Phone Number: 917-939-6971 brandao@ddc.nyc.gov

Brief description of the Project completed or the Project in progress: Installation of combined sewer system and replacement of water main including street restoration at Dean Street, Carlton Ave., and Vanderbilt Ave.

Was the Project performed as a prime, a subcontractor or a sub-subcontractor: Prime

Amount of Contract, Subcontract or Sub-subcontract: $16,233,118

Start Date and Completion Date: 11/12022 - 11/2025

****

Name of Contractor: DeBoe Construction Corp.

Name of Project: QED-1050 Install Water Mains throughout the Bronx and Queens

Location of Project: The Bronx & Queens

Owner or Owner's representative (Architect or Engineer) who is familiar with the work performed:

Name: NYCDDC Franco Mesiti

Title: Director Phone Number: 917-939-6794 mesitif@ddc.nyc.gov

Brief description of the Project completed or the Project in progress: Install water mains in connection with new building construction, or to improve the city's water main distribution system pertaining to water quality and fire protection. Furnish, deliver, install and restore 460 house service water connection under master plumber.

Was the Project performed as a prime, a subcontractor or a sub-subcontractor: Prime

Amount of Contract, Subcontract or Sub-subcontract: $6,995,148

Start Date and Completion Date: 7/2021 - 5/2023

QUALIFICATION FORM

Name of Contractor: DeBoe Construction Corp.

Name of Project: BED-819 Water Main Replacement in Oriental Blvd

Location of Project: Brooklyn

Owner or Owner's representative (Architect or Engineer) who is familiar with the work performed:

Name: NYCDDC Marie Brandao

Title: Borough Director Phone Number: 917-939-6971

Brief description of the Project completed or the Project in progress: Replacement of water mains as indicated in the contract drawings including furnish, delivering, installing, and restoring aproximatly 1080 house service water connections under a license master plumber

Was the Project performed as a prime, a subcontractor or a sub-subcontractor: Prime

Amount of Contract, Subcontract or Sub-subcontract: $35,324,319.00

Start Date and Completion Date: 9/19/2022 - 9/17/2024

****

Name of Contractor: DeBoe Construction Corp.

Name of Project: RED-388 Install Distribution Water Mains throughout Brooklyn, & Staten Island

Location of Project: Brooklyn and Staten Island

Owner or Owner's representative (Architect or Engineer) who is familiar with the work performed:

Name: NYCDDC Adam Alweiss

Title: Assistant Commissioner Phone Number: 917-417-6784 alweissa@ddc.nyc.com

Brief description of the Project completed or the Project in progress: Install water mains in connection with new building construction, or to improve the city's water main distribution system pertaining to water quality & fire protection on an as needed basis.

Was the Project performed as a prime, a subcontractor or a sub-subcontractor: Prime

Amount of Contract, Subcontract or Sub-subcontract: $7,662,559.00

Start Date and Completion Date: 7/12/2021 - 6/6/2023

Department of Design and Construction

NEW YORK CITY DEPARTMENT OF DESIGN AND CONSTRUCTION
DIVISION OF INFRASTRUCTURE - BUREAU OF DESIGN
BID SCHEDULE

Project ID: QED1063AC
ePIN: **85026B0023**

TOTAL BID PRICE: **$19,112,819.19**

Col. 1	Col. 2	Col. 3	Col. 4	Col. 5	Col. 6	Col. 7	Col.8	Col.9
Seq. No	Item Number	Line Type	Item Description	Engineer's Estimate of Quantity	Unit	Unit Price	Extended Amount	Price Criteria
1	4.02 AB-R	Bid Item	ASPHALTIC CONCRETE WEARING COURSE, 1-1/2" THICK	10,797.00	S.Y.	$44.00	$475,068.00	
2	4.02 AG	Bid Item	ASPHALTIC CONCRETE WEARING COURSE, 3" THICK	4,049.00	S.Y.	$1.00	$4,049.00	
3	4.02 CB	Bid Item	ASPHALTIC CONCRETE MIXTURE	1,741.00	TONS	$85.00	$147,985.00	
4	4.04 H	Bid Item	CONCRETE BASE FOR PAVEMENT, VARIABLE THICKNESS FOR TRENCH RESTORATION, (HIGH-EARLY STRENGTH)	1,258.00	C.Y.	$662.00	$832,796.00	
5	4.04 HB	Bid Item	CONCRETE BASE FOR PAVEMENT, 7" THICK (HIGH-EARLY STRENGTH)	91.00	C.Y.	$662.00	$60,242.00	
6	4.05 AX	Bid Item	HIGH-EARLY STRENGTH REINFORCED CONCRETE PAVEMENT (BUS STOPS)	33.00	C.Y.	$1,000.00	$33,000.00	
7	4.08 AA	Bid Item	CONCRETE CURB (18" DEEP)	378.00	L.F.	$1.00	$378.00	
8	4.09 AD	Bid Item	STRAIGHT STEEL FACED CONCRETE CURB (18" DEEP)	365.00	L.F.	$1.00	$365.00	
9	4.09 AF	Bid Item	STRAIGHT STEEL FACED CONCRETE CURB (27" DEEP)	90.00	L.F.	$1.00	$90.00	
10	4.09 BD	Bid Item	DEPRESSED STEEL FACED CONCRETE CURB (18" DEEP)	75.00	L.F.	$1.00	$75.00	
11	4.09 CD	Bid Item	CORNER STEEL FACED CONCRETE CURB (18" DEEP)	100.00	L.F.	$1.00	$100.00	
12	4.11 CA	Bid Item	FILL, PLACE MEASUREMENT	4.00	C.Y.	$1.00	$4.00	
13	4.13 AAS	Bid Item	4" CONCRETE SIDEWALK (UNPIGMENTED)	11,466.00	S.F.	$7.00	$80,262.00	
14	4.13 BAS	Bid Item	7" CONCRETE SIDEWALK (UNPIGMENTED)	540.00	S.F.	$1.00	$540.00	
15	4.13 DE	Bid Item	EMBEDDED PREFORMED DETECTABLE WARNING UNITS	145.00	S.F.	$0.01	$1.45	
16	4.14 W	Bid Item	WELDED STEEL WIRE FABRIC	750.00	LBS.	$0.01	$7.50	
17	4.15	Bid Item	TOPSOIL	188.00	C.Y.	$0.01	$1.88	
18	4.16 AA	Bid Item	TREES REMOVED (4" TO UNDER 12" CALIPER)	13.00	EACH	$625.00	$8,125.00	
19	4.16 AB	Bid Item	TREES REMOVED (12" TO UNDER 18" CALIPER)	5.00	EACH	$1,200.00	$6,000.00	
20	4.16 AC	Bid Item	TREES REMOVED (18" TO UNDER 24" CALIPER)	2.00	EACH	$2,200.00	$4,400.00	
21	4.16 AD	Bid Item	TREES REMOVED (24" CALIPER AND OVER)	2.00	EACH	$3,275.00	$6,550.00	
22	4.16 STUMP	Bid Item	STUMP REMOVAL	9.00	EACH	$600.00	$5,400.00	
23	4.18 A	Bid Item	MAINTENANCE TREE PRUNING (UNDER 12" CAL.)	227.00	EACH	$170.00	$38,590.00	
24	4.18 B	Bid Item	MAINTENANCE TREE PRUNING (12" TO UNDER 18" CAL.)	102.00	EACH	$235.00	$23,970.00	
25	4.18 C	Bid Item	MAINTENANCE TREE PRUNING (18" TO UNDER 24" CAL.)	30.00	EACH	$295.00	$8,850.00	
26	4.18 D	Bid Item	MAINTENANCE TREE PRUNING (24" CAL. AND OVER)	46.00	EACH	$340.00	$15,640.00	
27	4.19	Bid Item	SODDING	28.00	S.Y.	$0.01	$0.28	
28	4.20	Bid Item	SEEDING	184.00	S.Y.	$0.01	$1.84	
29	4.21	Bid Item	TREE CONSULTANT	2,180.00	P/HR	$1.00	$2,180.00	
30	51.23RF	Bid Item	REPLACEMENT OF EXISTING MANHOLE FRAME AND COVER	15.00	EACH	$1.00	$15.00	
31	52.41D06R	Bid Item	6" D.I.P. HOUSE CONNECTION DRAIN ON CONCRETE CRADLE (RECONNECTION)	250.00	L.F.	$1.00	$250.00	
32	52.41D08R	Bid Item	8" D.I.P. HOUSE CONNECTION DRAIN ON CONCRETE CRADLE (RECONNECTION)	250.00	L.F.	$1.00	$250.00	
33	52.41V06R	Bid Item	6" E.S.V.P. HOUSE CONNECTION DRAIN ON CONCRETE CRADLE (RECONNECTION)	250.00	L.F.	$1.00	$250.00	
34	52.41V08R	Bid Item	8" E.S.V.P. HOUSE CONNECTION DRAIN ON CONCRETE CRADLE (RECONNECTION)	250.00	L.F.	$1.00	$250.00	
35	54.12CS	Bid Item	CLEANING OF DRAINAGE STRUCTURES	60.00	C.Y.	$1.00	$60.00	
36	6.01 AC	Bid Item	CLEARING AND GRUBBING	28.00	S.Y.	$1.00	$28.00	
37	6.02 AAN	Bid Item	UNCLASSIFIED EXCAVATION	3,770.00	C.Y.	$1.00	$3,770.00	
38	6.02 PA	Bid Item	PNEUMATIC EXCAVATION AROUND TREES	25.00	C.Y.	$1.00	$25.00	
39	6.02 XSCW	Bid Item	INCREMENTAL COST FOR USING SPECIAL CARE WORK METHODS NEAR (FROM 3 FEET TO 50 FEET) TRANSIT FACILITIES	5.00	C.Y.	$1.00	$5.00	
40	6.25 RS	Bid Item	TEMPORARY SIGNS	11,955.00	S.F.	$0.01	$119.55	
41	6.26	Bid Item	TIMBER CURB	14,045.00	L.F.	$0.01	$140.45	
42	6.27 A	Bid Item	DEMOLITION OF STRUCTURES	10.00	C.Y.	$0.01	$0.10	
43	6.28 AA	Bid Item	LIGHTED TIMBER BARRICADES	10,320.00	L.F.	$0.01	$103.20	
44	6.34 ADTP	Bid Item	TEMPORARY CHAIN LINK FENCE, 8'-0" HIGH (WITH TOP AND BOTTOM RAILS AND POSTS MOUNTED ON STEEL PLATES)	1,200.00	L.F.	$0.01	$12.00	
45	6.36 DR	Bid Item	STRUCTURAL REPAIR AND ADJUSTMENT OF UTILITY STRUCTURES	1.00	C.Y.	$1.00	$1.00	
46	6.40 DU	Bid Item	ENGINEER'S FIELD OFFICE (JOINT USE) (TYPE DU)	30.00	MONTH	$1,000.00	$30,000.00	
47	6.44	Bid Item	THERMOPLASTIC REFLECTORIZED PAVEMENT MARKINGS (4" WIDE)	17,918.00	L.F.	$1.65	$29,564.70	

Department of Design and Construction

NEW YORK CITY DEPARTMENT OF DESIGN AND CONSTRUCTION
DIVISION OF INFRASTRUCTURE - BUREAU OF DESIGN
BID SCHEDULE

Project ID: QED1063AC
ePIN: **85026B0023**

TOTAL BID PRICE: **$19,112,819.19**

Col. 1	Col. 2	Col. 3	Col. 4	Col. 5	Col. 6	Col. 7	Col.8	Col.9
Seq. No	Item Number	Line Type	Item Description	Engineer's Estimate of Quantity	Unit	Unit Price	Extended Amount	Price Criteria
48	6.44 CST	Bid Item	COLOR SURFACE TREATMENT FOR PAVEMENTS (CST)	20,585.00	S.F.	$1.00	$20,585.00	
49	6.44 L	Bid Item	PAVEMENT MARKINGS - LETTERS AND NUMBERS	214.00	EACH	$255.00	$54,570.00	
50	6.44 S	Bid Item	PAVEMENT MARKINGS - SYMBOLS	123.00	EACH	$195.00	$23,985.00	
51	6.49	Bid Item	TEMPORARY PAVEMENT MARKINGS (4" WIDE)	15,944.00	L.F.	$0.01	$159.44	
52	6.52 CG	Bid Item	CROSSING GUARD	5,648.00	P/HR	$121.00	$683,408.00	Unit price bid shall not be less than: $100.00
53	6.53	Bid Item	REMOVE EXISTING LANE MARKINGS (4" WIDE)	21,780.00	L.F.	$0.01	$217.80	
54	6.55	Bid Item	SAWCUTTING EXISTING PAVEMENT	46,355.00	L.F.	$1.00	$46,355.00	
55	6.82 A	Bid Item	REMOVING EXISTING TRAFFIC AND STREET NAME SIGNS	54.00	S.F.	$0.01	$0.54	
56	6.82 B	Bid Item	REMOVING EXISTING TRAFFIC AND STREET NAME SIGN POSTS	75.00	L.F.	$0.01	$0.75	
57	6.83 AA	Bid Item	FURNISHING NEW NON-REFLECTORIZED TRAFFIC SIGNS	14.00	S.F.	$0.01	$0.14	
58	6.83 AB	Bid Item	FURNISHING NEW TRAFFIC SIGN POSTS	75.00	L.F.	$0.01	$0.75	
59	6.83 AR	Bid Item	FURNISHING NEW REFLECTORIZED TRAFFIC SIGNS	40.00	S.F.	$0.01	$0.40	
60	6.83 BA	Bid Item	INSTALLING TRAFFIC SIGNS	54.00	S.F.	$0.01	$0.54	
61	6.83 BB	Bid Item	INSTALLING TRAFFIC SIGN POSTS	75.00	L.F.	$0.01	$0.75	
62	6.84 B	Bid Item	LOLLIPOP TYPE BUS STOP SIGNS	1.00	F.S	$12,205.00	$12,205.00	Price bid shall be for the Fixed Sum of: $12,205.00
63	6.87	Bid Item	PLASTIC BARRELS	7,350.00	EACH	$1.00	$7,350.00	
64	6.91	Bid Item	REFLECTIVE CRACKING MEMBRANE (18" WIDE)	41,100.00	L.F.	$3.00	$123,300.00	
65	60.11R520	Bid Item	FURNISHING AND DELIVERING 20-INCH DUCTILE IRON RESTRAINED JOINT PIPE (CLASS 55)	20.00	L.F.	$267.00	$5,340.00	
66	60.11R606	Bid Item	FURNISHING AND DELIVERING 6-INCH DUCTILE IRON RESTRAINED JOINT PIPE (CLASS 56)	869.00	L.F.	$56.00	$48,664.00	
67	60.11R608	Bid Item	FURNISHING AND DELIVERING 8-INCH DUCTILE IRON RESTRAINED JOINT PIPE (CLASS 56)	8,266.00	L.F.	$88.00	$727,408.00	
68	60.11R612	Bid Item	FURNISHING AND DELIVERING 12-INCH DUCTILE IRON RESTRAINED JOINT PIPE (CLASS 56)	10,781.00	L.F.	$140.00	$1,509,340.00	
69	60.12D06	Bid Item	LAYING 6-INCH DUCTILE IRON PIPE AND FITTINGS	918.00	L.F.	$110.00	$100,980.00	
70	60.12D08	Bid Item	LAYING 8-INCH DUCTILE IRON PIPE AND FITTINGS	8,465.00	L.F.	$178.00	$1,506,770.00	
71	60.12D12	Bid Item	LAYING 12-INCH DUCTILE IRON PIPE AND FITTINGS	11,200.00	L.F.	$203.00	$2,273,600.00	
72	60.12D20	Bid Item	LAYING 20-INCH DUCTILE IRON PIPE AND FITTINGS	34.00	L.F.	$400.00	$13,600.00	
73	60.13M0A24	Bid Item	FURNISHING AND DELIVERING DUCTILE IRON MECHANICAL JOINT 24-INCH DIAMETER AND SMALLER FITTINGS, INCLUDING WEDGE TYPE RETAINER GLANDS	66.00	TONS	$1,000.00	$66,000.00	
74	61.11DMM06	Bid Item	FURNISHING AND DELIVERING 6-INCH MECHANICAL JOINT DUCTILE IRON GATE VALVE COMPLETE WITH WEDGE TYPE RETAINER GLANDS	68.00	EACH	$1,459.00	$99,212.00	
75	61.11DMM08	Bid Item	FURNISHING AND DELIVERING 8-INCH MECHANICAL JOINT DUCTILE IRON GATE VALVE COMPLETE WITH WEDGE TYPE RETAINER GLANDS	29.00	EACH	$2,249.00	$65,221.00	
76	61.11DMM12	Bid Item	FURNISHING AND DELIVERING 12-INCH MECHANICAL JOINT DUCTILE IRON GATE VALVE COMPLETE WITH WEDGE TYPE RETAINER GLANDS	39.00	EACH	$4,649.00	$181,311.00	
77	61.11TWC08	Bid Item	FURNISHING AND DELIVERING 8-INCH WET CONNECTION TAPPING VALVE COMPLETE WITH WEDGE TYPE RETAINER GLANDS	1.00	EACH	$2,530.00	$2,530.00	
78	61.11TWC12	Bid Item	FURNISHING AND DELIVERING 12-INCH WET CONNECTION TAPPING VALVE COMPLETE WITH WEDGE TYPE RETAINER GLANDS	6.00	EACH	$3,213.00	$19,278.00	
79	61.12DMM06	Bid Item	SETTING 6-INCH MECHANICAL JOINT DUCTILE IRON GATE VALVE COMPLETE WITH WEDGE TYPE RETAINER GLANDS	68.00	EACH	$400.00	$27,200.00	
80	61.12DMM08	Bid Item	SETTING 8-INCH MECHANICAL JOINT DUCTILE IRON GATE VALVE COMPLETE WITH WEDGE TYPE RETAINER GLANDS	29.00	EACH	$1,550.00	$44,950.00	
81	61.12DMM12	Bid Item	SETTING 12-INCH MECHANICAL JOINT DUCTILE IRON GATE VALVE COMPLETE WITH WEDGE TYPE RETAINER GLANDS	39.00	EACH	$1,550.00	$60,450.00	
82	61.12TWC08	Bid Item	SETTING 8-INCH WET CONNECTION TAPPING VALVE COMPLETE WITH WEDGE TYPE RETAINER GLANDS	1.00	EACH	$1.00	$1.00	
83	61.12TWC12	Bid Item	SETTING 12-INCH WET CONNECTION TAPPING VALVE COMPLETE WITH WEDGE TYPE RETAINER GLANDS	6.00	EACH	$1.00	$6.00	
84	62.11SD	Bid Item	FURNISHING AND DELIVERING HYDRANTS	60.00	EACH	$5,345.00	$320,700.00	
85	62.11SS	Bid Item	FURNISHING AND DELIVERING HYDRANTS - SMITH TYPE (S-2-LP)	5.00	EACH	$5,345.00	$26,725.00	

Department of Design and Construction

NEW YORK CITY DEPARTMENT OF DESIGN AND CONSTRUCTION
DIVISION OF INFRASTRUCTURE - BUREAU OF DESIGN
BID SCHEDULE

Project ID: QED1063AC
ePIN: **85026B0023**

TOTAL BID PRICE: **$19,112,819.19**

Col. 1	Col. 2	Col. 3	Col. 4	Col. 5	Col. 6	Col. 7	Col.8	Col.9
Seq. No	Item Number	Line Type	Item Description	Engineer's Estimate of Quantity	Unit	Unit Price	Extended Amount	Price Criteria
86	62.12SG	Bid Item	SETTING HYDRANTS COMPLETE WITH WEDGE TYPE RETAINER GLANDS	65.00	EACH	$600.00	$39,000.00	
87	62.13RH	Bid Item	REMOVING HYDRANTS	44.00	EACH	$1.00	$44.00	
88	62.14FS	Bid Item	FURNISHING, DELIVERING AND INSTALLING HYDRANT FENDERS	130.00	EACH	$600.00	$78,000.00	
89	63.11VC	Bid Item	FURNISHING AND DELIVERING VARIOUS CASTINGS	108.00	TONS	$1.00	$108.00	
90	64.11EL	Bid Item	WITHDRAWING AND REPLACING HOUSE SERVICES USING 1-1/2-INCH OR LARGER SCREW TAPS	36.00	EACH	$675.00	$24,300.00	
91	64.11ST	Bid Item	WITHDRAWING AND REPLACING HOUSE SERVICES USING SMALLER THAN 1-1/2-INCH SCREW TAPS	187.00	EACH	$263.00	$49,181.00	
92	64.12COEG	Bid Item	CUTTING AND OFFSETTING HOUSE SERVICE WATER CONNECTIONS (EQUAL TO OR GREATER THAN 3-INCH DIAMETER)	20.00	L.F.	$1.00	$20.00	
93	64.12COLT	Bid Item	CUTTING AND OFFSETTING HOUSE SERVICE WATER CONNECTIONS (LESS THAN 3-INCH DIAMETER)	152.00	L.F.	$1.00	$152.00	
94	64.12ESEG	Bid Item	EXTENDING HOUSE SERVICE WATER CONNECTIONS (EQUAL TO OR GREATER THAN 3-INCH DIAMETER)	20.00	L.F.	$1.00	$20.00	
95	64.12ESLT	Bid Item	EXTENDING HOUSE SERVICE WATER CONNECTIONS (LESS THAN 3-INCH DIAMETER)	350.00	L.F.	$12.00	$4,200.00	
96	64.13WC12	Bid Item	FURNISHING, DELIVERING AND INSTALLING WET CONNECTION SLEEVE ON 12-INCH WATER MAIN PIPE WITH VARIOUS OUTLETS	5.00	EACH	$2,359.00	$11,795.00	
97	64.14A	Bid Item	REPLACEMENT OF SERVICE LINE UP TO 1 IN, UP TO 40 FT	222.00	EACH	$7,000.00	$1,554,000.00	
98	64.14AL	Bid Item	ADDITIONAL LENGTH OF SERVICE LINE UP TO 1 IN BEYOND 40 FT	2,877.00	L.F.	$12.00	$34,524.00	
99	64.14AM	Bid Item	REPLACEMENT OF SERVICE LINE UP TO 1 IN BETWEEN BUILDING CONTROL VALVE AND METER	222.00	L.F.	$12.00	$2,664.00	
100	64.14B	Bid Item	REPLACEMENT OF SERVICE LINE 1-1/4 TO 2 IN, UP TO 40 FT	28.00	EACH	$7,500.00	$210,000.00	
101	64.14BL	Bid Item	ADDITIONAL LENGTH OF SERVICE LINE 1 -1/4 TO 2 IN BEYOND 40 FT	35.00	L.F.	$17.00	$595.00	
102	64.14BM	Bid Item	REPLACEMENT OF SERVICE LINE 1-1/4 TO 2 IN, BETWEEN BUILDING CONTROL VALVE AND METER	28.00	L.F.	$17.00	$476.00	
103	64.14V	Bid Item	INSTALL NEW BUILDING CONTROL VALVE 2 IN AND UNDER	250.00	EACH	$100.00	$25,000.00	
104	65.11BR	Bid Item	FURNISHING, DELIVERING AND INSTALLING BANDS, RODS, WASHERS, ETC., COMPLETE, FOR RESTRAINING JOINTS	1,093.00	LBS.	$0.01	$10.93	
105	65.21PS	Bid Item	FURNISHING AND PLACING POLYETHYLENE SLEEVE	10,348.00	L.F.	$2.00	$20,696.00	Unit price bid shall not be less than: $2.00
106	65.31FF	Bid Item	FURNISHING, DELIVERING AND PLACING FILTER FABRIC	156,675.00	S.F.	$0.10	$15,667.50	Unit price bid shall not be less than: $0.10
107	65.51PC	Bid Item	FURNISHING AND PLACING CAST-IN-PLACE CONCRETE CLASS 40 AND PRECAST CONCRETE CLASS 50	18.00	C.Y.	$0.01	$0.18	
108	65.61SS	Bid Item	FURNISHING, DELIVERING AND PLACING STRUCTURAL, REINFORCING AND MISCELLANEOUS STEEL	700.00	LBS.	$0.01	$7.00	
109	65.71SG	Bid Item	FURNISHING, DELIVERING AND PLACING SCREENED GRAVEL OR SCREENED BROKEN STONE BEDDING	632.00	C.Y.	$0.01	$6.32	
110	7.07 A	Bid Item	REMOVING EXISTING STEEL BOLLARDS	4.00	EACH	$0.01	$0.04	
111	7.07 MB2	Bid Item	MARTELLO BOLLARD, VERSION 2.0	4.00	EACH	$0.01	$0.04	
112	7.13 B	Bid Item	MAINTENANCE OF SITE	24.00	MONTH	$1.00	$24.00	
113	7.16 D	Bid Item	TEST PITS	10.00	C.Y.	$500.00	$5,000.00	
114	7.19	Bid Item	LOAD TRANSFER JOINT	80.00	L.F.	$1.00	$80.00	
115	7.30 B	Bid Item	REMOVAL OF TRACK	40.00	L.F.	$1.00	$40.00	
116	7.31 A	Bid Item	DEMOLITION OF ROADWAY VAULTS	16.00	C.Y.	$1.00	$16.00	
117	7.31 B	Bid Item	DEMOLITION OF TROLLEY TRACK TRUSS BLOCKS	2.00	C.Y.	$1.00	$2.00	
118	7.35	Bid Item	PEDESTRIAN CHANNELIZER	22,485.00	L.F.	$1.00	$22,485.00	
119	7.88 AA	Bid Item	RODENT INFESTATION SURVEY AND MONITORING	1.00	L.S.	$27,900.00	$27,900.00	
120	7.88 AB	Bid Item	RODENT BAIT STATIONS	560.00	EACH	$65.00	$36,400.00	Unit price bid shall not be less than: $65.00
121	7.88 AC	Bid Item	BAITING OF RODENT BAIT STATIONS	560.00	EACH	$11.00	$6,160.00	Unit price bid shall not be less than: $11.00
122	7.88 AD	Bid Item	WATERBUG BAIT APPLICATIONS	580.00	BLOCK	$75.00	$43,500.00	Unit price bid shall not be less than: $75.00
123	70.31FN	Bid Item	FENCING	14,045.00	L.F.	$1.50	$21,067.50	Unit price bid shall not be less than: $1.50
124	70.51EO	Bid Item	EXCAVATION OF BOULDERS IN OPEN CUT	20.00	C.Y.	$75.00	$1,500.00	Unit price bid shall not be less than: $75.00
125	70.61RE	Bid Item	ROCK EXCAVATION	20.00	C.Y.	$2,000.00	$40,000.00	
126	70.81CB	Bid Item	CLEAN BACKFILL	4,851.00	C.Y.	$15.00	$72,765.00	Unit price bid shall not be less than: $15.00

Department of Design and Construction

NEW YORK CITY DEPARTMENT OF DESIGN AND CONSTRUCTION
DIVISION OF INFRASTRUCTURE - BUREAU OF DESIGN
BID SCHEDULE

Project ID: QED1063AC
ePIN: **85026B0023**

TOTAL BID PRICE: **$19,112,819.19**

Col. 1	Col. 2	Col. 3	Col. 4	Col. 5	Col. 6	Col. 7	Col.8	Col.9
Seq. No	Item Number	Line Type	Item Description	Engineer's Estimate of Quantity	Unit	Unit Price	Extended Amount	Price Criteria
127	70.91SW12	Bid Item	FURNISHING AND PLACING SHEETING AND BRACING IN TRENCH FOR WATER MAIN PIPE 12-INCH IN DIAMETER AND LESS	4,692.00	S.F.	$0.01	$46.92	
128	70.91SW20	Bid Item	FURNISHING AND PLACING SHEETING AND BRACING IN TRENCH FOR WATER MAIN PIPE 20-INCH IN DIAMETER	422.00	S.F.	$1.00	$422.00	
129	73.11AB	Bid Item	ADDITIONAL BRICK MASONRY	10.00	C.Y.	$62.50	$625.00	Unit price bid shall not be less than: $62.50
130	73.21AC	Bid Item	ADDITIONAL CONCRETE	20.00	C.Y.	$62.50	$1,250.00	Unit price bid shall not be less than: $62.50
131	73.31AE0	Bid Item	ADDITIONAL EARTH EXCAVATION INCLUDING TEST PITS (ALL DEPTHS)	749.00	C.Y.	$20.00	$14,980.00	Unit price bid shall not be less than: $20.00
132	73.41AG	Bid Item	ADDITIONAL SELECT GRANULAR BACKFILL	20.00	C.Y.	$15.00	$300.00	Unit price bid shall not be less than: $15.00
133	73.51AS	Bid Item	ADDITIONAL STEEL REINFORCING BARS	1,000.00	LBS.	$1.00	$1,000.00	Unit price bid shall not be less than: $1.00
134	8.01 C1	Bid Item	HANDLING, TRANSPORTING AND DISPOSAL OF NON-HAZARDOUS CONTAMINATED SOIL	8,982.00	TONS	$60.00	$538,920.00	Unit price bid shall not be less than: $60.00
135	8.01 C2	Bid Item	SAMPLING AND TESTING OF CONTAMINATED/POTENTIALLY HAZARDOUS SOIL FOR DISPOSAL PURPOSES	47.00	SETS	$2,500.00	$117,500.00	Unit price bid shall not be less than: $2,500.00
136	8.01 H	Bid Item	HANDLING, TRANSPORTING AND DISPOSAL OF HAZARDOUS SOIL	1,497.00	TONS	$400.00	$598,800.00	Unit price bid shall not be less than: $400.00
137	8.01 S	Bid Item	HEALTH AND SAFETY	1.00	L.S.	$20,000.00	$20,000.00	Unit price bid shall not be less than: $20,000.00
138	8.01 W1	Bid Item	REMOVAL, TREATMENT, AND DISCHARGE/DISPOSAL OF CONTAMINATED WATER	5.00	DAY	$17,000.00	$85,000.00	Unit price bid shall not be less than: $1,700.00
139	8.01 W2	Bid Item	SAMPLING AND TESTING OF CONTAMINATED WATER	5.00	SETS	$1,600.00	$8,000.00	Unit price bid shall not be less than: $1,600.00
140	8.02 A	Bid Item	SPECIAL CARE EXCAVATION AND RESTORATION FOR SIDEWALK WORK	163.00	S.F.	$1.00	$163.00	
141	8.02 B	Bid Item	SPECIAL CARE EXCAVATION AND RESTORATION FOR CURB WORK	33.00	L.F.	$1.00	$33.00	
142	8.10 B	Bid Item	NEW SURVEY MONUMENTS, TYPE "B"	4.00	EACH	$1.00	$4.00	
143	8.10 BM	Bid Item	NEW SURVEY MONUMENTS, TYPE "B" (WITH MONUMENT COVER)	1.00	EACH	$1.00	$1.00	
144	8.32	Bid Item	BARK CHIP MULCH	2,250.00	S.Y.	$0.01	$22.50	
145	9.00 C	Bid Item	EXPLORATORY TEST PITS	10.00	C.F.	$500.00	$5,000.00	
146	9.06 HW	Bid Item	ALLOWANCE FOR DECORATIVE MESH FABRIC	1.00	F.S	$112,450.00	$112,425.00	Price bid shall be for the Fixed Sum of: $112,425.00
147	9.23	Bid Item	PRICE ADJUSTMENTS	1.00	F.S	$30,000.00	$30,000.00	Price bid shall be for the Fixed Sum of: $30,000.00
148	9.28	Bid Item	EXPANDED WORK ALLOWANCE	1.00	F.S	$1,004,000.00	$1,004,000.00	Price bid shall be for the Fixed Sum of: $1,004,000.00
149	9.30	Bid Item	STORM WATER POLLUTION PREVENTION	1.00	L.S.	$48,000.00	$48,000.00	
150	HW-900H	Bid Item	ALLOWANCE FOR CITY WORK ACCELERATION	1.00	F.S	$492,000.00	$492,000.00	Price bid shall be for the Fixed Sum of: $492,000.00
151	JB 108.1	Bid Item	UTILITIES CROSSING TRENCH FOR WATER MAIN UP TO AND INCLUDING 12" DIAMETER (TYPE .1)	97.00	EACH	$945.00	$91,665.00	Unit price bid shall not be less than: $945.00
152	JB 108.2	Bid Item	UTILITIES CROSSING TRENCH FOR WATER MAIN UP TO AND INCLUDING 12" DIAMETER (TYPE .2)	68.00	EACH	$1,627.00	$110,636.00	Unit price bid shall not be less than: $1,627.00
153	JB 108.3	Bid Item	UTILITIES CROSSING TRENCH FOR WATER MAIN UP TO AND INCLUDING 12" DIAMETER (TYPE .3)	9.00	EACH	$2,317.00	$20,853.00	Unit price bid shall not be less than: $2,317.00
154	JB 109.1	Bid Item	UTILITIES CROSSING TRENCH FOR WATER MAIN OVER 12" AND UP TO 24" DIAMETER (TYPE .1)	3.00	EACH	$1,370.00	$4,110.00	Unit price bid shall not be less than: $1,370.00
155	JB 300.1	Bid Item	SPECIAL CARE EXCAVATION AND BACKFILLING IN TRENCH LESS THAN 5' DEEP	123.00	C.Y.	$281.00	$34,563.00	Unit price bid shall not be less than: $281.00
156	JB 300.2	Bid Item	SPECIAL CARE EXCAVATION AND BACKFILLING IN TRENCH GREATER THAN 5' DEEP	107.00	C.Y.	$319.00	$34,133.00	Unit price bid shall not be less than: $319.00
157	JB 301	Bid Item	SPECIAL CARE EXCAVATION AND BACKFILLING FOR OIL-O-STATIC PIPE	132.00	C.Y.	$427.00	$56,364.00	Unit price bid shall not be less than: $427.00
158	JB 303	Bid Item	FURNISH, DELIVER AND INSTALL TYPE 3/8 CLEAN SAND BACKFILL	114.00	C.Y.	$224.00	$25,536.00	Unit price bid shall not be less than: $224.00
159	JB 330E	Bid Item	SUPPORT AND PROTECTION OF UTILITY FACILITIES DURING EXCAVATION	308.00	L.F.	$192.00	$59,136.00	Unit price bid shall not be less than: $192.00
160	JB 330T1	Bid Item	SUPPORT AND PROTECTION OF COMMUNICATION UTILITY FACILITIES DURING EXCAVATION OF CITY TRENCH WHEN PARALLELING COMMUNICATION FACILITIES LIE COMPLETELY IN THE PROPOSED CITY TRENCH	323.00	L.F.	$166.00	$53,618.00	Unit price bid shall not be less than: $166.00
161	JB 330T2.1	Bid Item	COMMUNICATIONS FACILITY OPERATOR(S) REQUEST THE TRENCH BE WIDENED	50.00	L.F.	$373.00	$18,650.00	Unit price bid shall not be less than: $373.00
162	JB 330T2.2	Bid Item	COMMUNICATIONS FACILITY OPERATOR(S) REQUESTS THE TRENCH/SHEETING BE MODIFIED	50.00	L.F.	$483.00	$24,150.00	Unit price bid shall not be less than: $483.00
163	JB 350	Bid Item	OVERHEAD ACCOMMODATION, PROTECTION OF OVERHEAD FACILITIES, POLES AND APPURTENANCES	1.00	L.S.	$100,000.00	$100,000.00	
164	JB 351	Bid Item	INSTALL AND REMOVE "A" FRAME ON UTILITY POLES	8.00	EACH	$1,533.00	$12,264.00	Unit price bid shall not be less than: $1,533.00
165	JB 400	Bid Item	TEST PITS FOR UTILITY FACILITIES	137.00	C.Y.	$355.00	$48,635.00	Unit price bid shall not be less than: $355.00

Department of Design and Construction

NEW YORK CITY DEPARTMENT OF DESIGN AND CONSTRUCTION
DIVISION OF INFRASTRUCTURE - BUREAU OF DESIGN
BID SCHEDULE

Project ID: QED1063AC
ePIN: **85026B0023**

TOTAL BID PRICE: **$19,112,819.19**

Col. 1	Col. 2	Col. 3	Col. 4	Col. 5	Col. 6	Col. 7	Col.8	Col.9
Seq. No	Item Number	Line Type	Item Description	Engineer's Estimate of Quantity	Unit	Unit Price	Extended Amount	Price Criteria
166	JB 401	Bid Item	TRENCH EXCAVATION FOR ADJUSTMENT OF UTILITY FACILITIES	747.00	C.Y.	$380.00	$283,860.00	Unit price bid shall not be less than: $380.00
167	JB 402.1	Bid Item	EXISTING CONCRETE ENCASED CONDUITS PLACED IN FINAL POSITION WITHOUT CONCRETE ENCASEMENT	15.00	L.F.	$76.00	$1,140.00	Unit price bid shall not be less than: $76.00
168	JB 402.2	Bid Item	EXISTING NON-CONCRETE ENCASED CONDUITS PLACED IN FINAL POSITION WITHOUT CONCRETE ENCASEMENT	715.00	L.F.	$50.00	$35,750.00	Unit price bid shall not be less than: $50.00
169	JB 402T.1A	Bid Item	EXISTING CONCRETE ENCASED TELECOMMUNICATION CONDUITS PLACED IN FINAL POSITION WITH CONCRETE ENCASEMENT	849.00	L.F.	$83.00	$70,467.00	Unit price bid shall not be less than: $83.00
170	JB 402T.2A	Bid Item	EXISTING NON-CONCRETE ENCASED TELECOMMUNICATION CONDUITS PLACED IN FINAL POSITION WITH CONCRETE ENCASEMENT	2,413.00	L.F.	$71.00	$171,323.00	Unit price bid shall not be less than: $71.00
171	JB 402T.3	Bid Item	ACM REMOVAL AND DISPOSAL OF VERIZON/ECS CONDUITS WITH ASBESTOS CONTAINING MATERIAL TRANSITE PIPES (ACM-TP) UP TO AND INCLUDING 4" DIAMETER	50.00	L.F.	$107.00	$5,350.00	Unit price bid shall not be less than: $107.00
172	JB 402T.V1A	Bid Item	EXISTING VACANT CONCRETE ENCASED TELECOMMUNICATION CONDUITS PLACED IN FINAL POSITION WITH CONCRETE ENCASEMENT	177.00	L.F.	$53.00	$9,381.00	Unit price bid shall not be less than: $53.00
173	JB 402T.V2A	Bid Item	EXISTING VACANT NON-CONCRETE ENCASED TELECOMMUNICATION CONDUITS PLACED IN FINAL POSITION WITH CONCRETE ENCASEMENT	272.00	L.F.	$73.00	$19,856.00	Unit price bid shall not be less than: $73.00
174	JB 403	Bid Item	PLACING STEEL PROTECTION PLATES FOR UTILITY FACILITIES	100.00	S.F.	$4.00	$400.00	Unit price bid shall not be less than: $4.00
175	JB 403T.2	Bid Item	FURNISH AND INSTALL STEEL PROTECTION PLATES FOR UTILITES FACILITES (3/8" THICK)	50.00	S.F.	$20.00	$1,000.00	Unit price bid shall not be less than: $20.00
176	JB 405.1	Bid Item	TRENCH EXCAVATION FOR INSTALLATION OF UTILITY FACILITIES WITH TOTAL DEPTHS LESS THAN FIVE FEET	16.00	C.Y.	$398.00	$6,368.00	Unit price bid shall not be less than: $398.00
177	JB 406	Bid Item	EXCAVATION FOR UTILITY STRUCTURE	77.00	C.Y.	$332.00	$25,564.00	Unit price bid shall not be less than: $332.00
178	JB 450.1	Bid Item	CONSTRUCTION FIELD SUPPORT - SURVEY CREW (TYPE .1)	75.00	CREW/HF	$382.00	$28,650.00	Unit price bid shall not be less than: $382.00
179	JB 450.2	Bid Item	CONSTRUCTION FIELD SUPPORT - SMALL SIZE CREW (TYPE .2)	70.00	CREW/HF	$538.00	$37,660.00	Unit price bid shall not be less than: $538.00
180	JB 450.3	Bid Item	CONSTRUCTION FIELD SUPPORT - MEDIUM SIZE CREW (TYPE .3)	100.00	CREW/HF	$1,294.00	$129,400.00	Unit price bid shall not be less than: $1,294.00
181	JB 500	Bid Item	REMOVAL OF ABANDONED UTILITY CONDUITS (NON-CONCRETE ENCASED)	373.00	L.F.	$5.00	$1,865.00	Unit price bid shall not be less than: $5.00
182	JB 501	Bid Item	REMOVAL OF ABANDONED MASONRY FOR UTILITY FACILITIES	2.00	C.Y.	$308.00	$616.00	Unit price bid shall not be less than: $308.00
183	JB 603E.1	Bid Item	INSTALL UTILITY CONDUITS PLACED IN FINAL POSITION WITHOUT CONCRETE ENCASEMENT	110.00	L.F.	$4.00	$440.00	Unit price bid shall not be less than: $4.00
184	JB 636 MD	Bid Item	MODIFICATION OF WORK METHODS TO ACCOMMODATE UTILITY HARDWARE (30" TO UNDER 34" WIDTH)	8.00	EACH	$198.00	$1,584.00	Unit price bid shall not be less than: $198.00
185	JB 636 R	Bid Item	REPAIR TO UTILITY STRUCTURES	10.00	C.Y.	$267.00	$2,670.00	Unit price bid shall not be less than: $267.00
186	JB 638 N	Bid Item	INSTALLATION OF FIELD CONSTRUCTED UTILITIES STRUCTURES	34.00	C.Y.	$1,256.00	$42,704.00	Unit price bid shall not be less than: $1,256.00
187	JB 638 NT	Bid Item	INSTALLATION OF FIELD CONSTRUCTED TELEPHONE/COMMUNICATIONS UTILITY STRUCTURE	1.00	C.Y.	$3,539.00	$3,539.00	Unit price bid shall not be less than: $3,539.00
188	JB 638 R	Bid Item	BREAK OUT AND REMOVE UTILITY STRUCTURE	60.00	C.Y.	$686.00	$41,160.00	Unit price bid shall not be less than: $686.00
189	JB 638 RT	Bid Item	BREAK OUT AND REMOVE TELEPHONE/COMMUNICATIONS UTILITY STRUCTURE CONTAINING ACTIVE CABLES	1.00	C.Y.	$6,991.00	$6,991.00	Unit price bid shall not be less than: $6,991.00
190	JB 700	Bid Item	SPECIAL MODIFICATION OF WORK METHODS TO ACCOMMODATE/PROTECT UNDERGROUND FACILITIES WITH LIMITED COVER	50.00	C.Y.	$146.00	$7,300.00	Unit price bid shall not be less than: $146.00
191	JB 710.1	Bid Item	REMOVAL OF ABANDONED UTILITY STEEL/CAST IRON/ PLASTIC PIPES, UP TO AND INCLUDING 12" DIAMETER PIPE	60.00	L.F.	$16.00	$960.00	Unit price bid shall not be less than: $16.00
192	JB 802A	Bid Item	SPECIAL CARE EXCAVATION AND RESTORATION FOR SIDEWALK WORK	50.00	S.F.	$6.00	$300.00	Unit price bid shall not be less than: $6.00
193	JB 802B	Bid Item	SPECIAL CARE EXCAVATION AND RESTORATION FOR CURB WORK	10.00	L.F.	$13.00	$130.00	Unit price bid shall not be less than: $13.00
194	JB 803.2	Bid Item	LINE CUT BY PNEUMATIC TOOLS IN LIEU OF SAW CUT ASSOCIATED WITH ROADWAY REMOVAL OPERATIONS (LINE CUT ANY COMBINATION OF ASPHALT AND CONCRETE ROADWAY)	220.00	L.F.	$24.00	$5,280.00	Unit price bid shall not be less than: $24.00
195	JB 9.28	Bid Item	UTILITY EXPANDED WORK ALLOWANCE	1.00	F.S	$310,679.20	$310,679.20	Price bid shall be for the Fixed Sum of: $310,679.20
196	T-1.2	Bid Item	INSTALL TYPE "F-1" FOUNDATION	1.00	EACH	$2,600.00	$2,600.00	
197	T-1.21	Bid Item	REMOVE TYPE "F-1" FOUNDATION	1.00	EACH	$1,000.00	$1,000.00	
198	T-2.2	Bid Item	INSTALL TYPE "S-14" POST	1.00	EACH	$1,100.00	$1,100.00	
199	T-2.23	Bid Item	REMOVE TYPE "S-10", "T-10" OR "S-14" SERIES POST	1.00	EACH	$900.00	$900.00	
200	T-20021	Bid Item	b) FURNISH 1" ANCHOR BOLT ASSEMBLIES FOR F-1 (EACH) (4 REQUIRED PER POST)	1.00	EACH	$160.00	$160.00	

Department of Design and Construction

NEW YORK CITY DEPARTMENT OF DESIGN AND CONSTRUCTION
DIVISION OF INFRASTRUCTURE - BUREAU OF DESIGN
BID SCHEDULE

Project ID: QED1063AC
ePIN: **85026B0023**

TOTAL BID PRICE: **$19,112,819.19**

Col. 1	Col. 2	Col. 3	Col. 4	Col. 5	Col. 6	Col. 7	Col.8	Col.9
Seq. No	Item Number	Line Type	Item Description	Engineer's Estimate of Quantity	Unit	Unit Price	Extended Amount	Price Criteria
201	T-20640	Bid Item	FURNISH ALUMINUM TRAFFIC SIGNAL POST TYPE "S-14"	1.00	EACH	$2,000.00	$2,000.00	
202	T-3.1	Bid Item	INSTALL "ONE-WAY" SIGNAL UNIT ON MAST ARM OR TOP OF TRAFFIC POST	2.00	EACH	$780.00	$1,560.00	
203	T-3.18	Bid Item	REMOVE SIGNAL HEAD FROM ANY TYPE POST	2.00	EACH	$490.00	$980.00	
204	T-3.21	Bid Item	REMOVE PEDESTRIAN SIGNAL OR SIGN UNIT OR OTHER ILLUMINATED SIGNS FROM ANY POST	2.00	EACH	$460.00	$920.00	
205	T-3.40	Bid Item	INSTALL ONE ACCESSIBLE PEDESTRIAN SIGNAL (APS) WITH APS INFORMATION SIGN ON METAL POLE	1.00	EACH	$940.00	$940.00	
206	T-3.6	Bid Item	INSTALL PEDESTRIAN SIGNAL ON ANY TYPE POST	2.00	EACH	$780.00	$1,560.00	
207	T-30013L	Bid Item	FURNISH ADJUSTABLE 3 SECTION 1-WAY, DIE CAST ALUMINUM TRAFFIC SIGNALS 8" - W/LED LENS	1.00	EACH	$780.00	$780.00	
208	T-31150	Bid Item	FURNISH "1SA" ALUMINUM DIE CASTINGS AND ASSEMBLY FOR POST SIGNAL MOUNTING	1.00	EACH	$315.00	$315.00	
209	T-31210	Bid Item	h) "HUB" ASSEMBLY *ASSEMBLY IS EQUAL TO ONE PAIR	1.00	EACH	$190.00	$190.00	
210	T-31351	Bid Item	g) "VB-2P" ASSEMBLY *ASSEMBLY IS EQUAL TO ONE PAIR	1.00	EACH	$432.00	$432.00	
211	T-31501GA	Bid Item	FURNISH 12 INCH GREEN ARROW LED (AS PER NYC SPECIFICATION)	1.00	EACH	$450.00	$450.00	
212	T-33001-L	Bid Item	FURNISH POLYCARBONATE PEDESTRIAN SIGNAL (16 X 16) W/LED COUNT LENS (SPECIFICATION A-L)	2.00	EACH	$780.00	$1,560.00	
213	T-33002	Bid Item	FURNISH AUDIBLE PEDESTRIAN SIGNAL UNIT	1.00	EACH	$980.00	$980.00	
214	T-5.14	Bid Item	SAW CUT ROADWAY	20.00	L.F.	$6.00	$120.00	
215	T-5.34	Bid Item	RESTORING PERMANENT SIDEWALK	20.00	S.F.	$10.00	$200.00	
216	T-5.50	Bid Item	FURNISH AND INSTALL 2" HDPE UNDERGROUND CONDUIT IN PAVED ROADWAY	20.00	L.F.	$39.00	$780.00	
217	T-6.10	Bid Item	REMOVE CABLE (INCLUDES OVERHEAD)	20.00	L.F.	$6.00	$120.00	
218	T-6.2	Bid Item	INSTALL MULTIPLE CABLE (INCLUDES OVERHEAD)	20.00	L.F.	$8.00	$160.00	
219	T-60000B	Bid Item	FURNISH 2 c # 10B (BREAKDOWN = 2#10 WITH 3RD WIRE FOR GROUNDING).	20.00	L.F.	$4.69	$93.80	
220	T-60040	Bid Item	c) 7 CONDUCTOR, 14 A.W.G.	20.00	L.F.	$4.06	$81.20	
221	T-60190	Bid Item	e) 13 CONDUCTOR, 14 A.W.G.	40.00	L.F.	$4.95	$198.00	
222	T-60200	Bid Item	FURNISH AND INSTALL AUDIBLE PEDESTRIAN SIGNALS CABLE	20.00	L.F.	$4.50	$90.00	
223	T-7.45	Bid Item	REMOVE PEDESTRIAN PUSHBUTTON AND PUSHBUTTON SIGN	1.00	EACH	$275.00	$275.00	
224	UTL-6.01.1 (CE)	Bid Item	GAS MAIN CROSSING SEWER UP TO 24" IN DIAMETER (S6.01)	15.00	EACH	$1,040.00	$15,600.00	Unit price bid shall not be less than: $1,040.00
225	UTL-6.01.8 (CE)	Bid Item	GAS SERVICES CROSSING TRENCHES AND/OR EXCAVATIONS (S6.01)	9.00	EACH	$465.00	$4,185.00	Unit price bid shall not be less than: $465.00
226	UTL-6.01.9 (CE)	Bid Item	GAS MAIN CROSSING WATER MAIN UP TO 20" IN DIAMETER (S6.01)	29.00	EACH	$485.00	$14,065.00	Unit price bid shall not be less than: $485.00
227	UTL-6.01.9 (NG)	Bid Item	GAS MAIN CROSSING WATER MAIN UP TO 20" IN DIAMETER (S6.01)	14.00	EACH	$485.00	$6,790.00	Unit price bid shall not be less than: $485.00
228	UTL-6.03 (CE)	Bid Item	REMOVAL OF ABANDONED GAS FACILITIES. ALL SIZES. (S6.03)	1,178.00	L.F.	$15.00	$17,670.00	Unit price bid shall not be less than: $15.00
229	UTL-6.03 (NG)	Bid Item	REMOVAL OF ABANDONED GAS FACILITIES. ALL SIZES. (S6.03)	1,500.00	L.F.	$15.00	$22,500.00	Unit price bid shall not be less than: $15.00
230	UTL-6.03.1 (NG)	Bid Item	REMOVAL OF ABANDONED GAS FACILITIES WITH POSSIBLE COAL TAR WRAP. ALL SIZES. (FOR NATIONAL GRID WORK ONLY) (S6.03)	1,500.00	L.F.	$25.00	$37,500.00	Unit price bid shall not be less than: $25.00
231	UTL-6.04 (NG)	Bid Item	ADJUST HARDWARE TO GRADE USING SPACER RINGS/ADAPTORS. (STREET REPAVING.) (S6.04)	6.00	EACH	$35.00	$210.00	Unit price bid shall not be less than: $35.00
232	UTL-6.05 (NG)	Bid Item	ADJUST HARDWARE TO GRADE BY RESETTING. (ROAD RECONSTRUCTION.) (S6.05)	6.00	EACH	$65.00	$390.00	Unit price bid shall not be less than: $65.00
233	UTL-6.06 (CE)	Bid Item	SPECIAL CARE EXCAVATION AND BACKFILLING (S6.06)	102.00	C.Y.	$180.00	$18,360.00	Unit price bid shall not be less than: $180.00
234	UTL-6.06 (NG)	Bid Item	SPECIAL CARE EXCAVATION AND BACKFILLING (S6.06)	800.00	C.Y.	$180.00	$144,000.00	Unit price bid shall not be less than: $180.00
235	UTL-6.07 (CE)	Bid Item	TEST PITS FOR GAS FACILITIES (S6.07)	58.00	C.Y.	$100.00	$5,800.00	Unit price bid shall not be less than: $100.00
236	UTL-6.07 (NG)	Bid Item	TEST PITS FOR GAS FACILITIES (S6.07)	50.00	C.Y.	$100.00	$5,000.00	Unit price bid shall not be less than: $100.00
237	UTL-6.09 (NG)	Bid Item	TRENCH EXCAVATION AND BACKFILL FOR GAS MAINS AND SERVICES. GAS INSTALLED BY OTHERS (FOR NATIONAL GRID WORK ONLY). (S6.09)	50.00	C.Y.	$190.00	$9,500.00	Unit price bid shall not be less than: $190.00
238	UTL-6.09A (CE)	Bid Item	TRENCH EXCAVATION AND BACKFILL FOR GAS MAINS AND SERVICES. GAS INSTALLED BY OTHERS (FOR CON EDISON WORK ONLY). (S6.09)	164.00	C.Y.	$200.00	$32,800.00	Unit price bid shall not be less than: $200.00
239	UTL-6.11 (NG)	Bid Item	SUPPORTS FOR PARALLEL FULLY EXPOSED GAS MAINS IN TRENCH	3.00	EACH	$1,200.00	$3,600.00	Unit price bid shall not be less than: $1,200.00
240	UTL-GCS-2WS (CE)	Bid Item	GAS INTERFERENCES AND ACCOMMODATIONS	1.00	F.S	$50,000.00	$50,000.00	Price bid shall be for the Fixed Sum of: $50,000.00
241	UTL-GCS-2WS (NG)	Bid Item	GAS INTERFERENCES AND ACCOMMODATIONS	1.00	F.S	$25,000.00	$25,000.00	Price bid shall be for the Fixed Sum of: $25,000.00
		Subtotal	**SUBTOTAL**				**$17,697,055.19**	

Department of Design and Construction

NEW YORK CITY DEPARTMENT OF DESIGN AND CONSTRUCTION
DIVISION OF INFRASTRUCTURE - BUREAU OF DESIGN
BID SCHEDULE

Project ID: QED1063AC
ePIN: **85026B0023**

TOTAL BID PRICE: **$19,112,819.19**

Col. 1	Col. 2	Col. 3	Col. 4	Col. 5	Col. 6	Col. 7	Col.8	Col.9
Seq. No	**Item Number**	**Line Type**	**Item Description**	**Engineer's Estimate of Quantity**	**Unit**	**Unit Price**	**Extended Amount**	**Price Criteria**
242	6.39 B	Mob	MOBILIZATION	1.00	L.S.	$1,415,764.00	$1,415,764.00	BID PRICE OF MOBILIZATION SHALL NOT EXCEED 8% OF THE ABOVE SUB-TOTAL PRICE.

Mayor's Office of Contract Services

SCHEDULE B – M/WBE Utilization Plan

Part 1: M/WBE Participation Goals

Contract Overview (To be completed by contracting agency)

APT E-Pin# 85026B0023 FMS Project ID# QED1063AC

Project Title Installation of Distribution Water Mains Queens and the Bronx Agency PIN# 8502025WM0001C

Contracting Agency New York Department of Design & Construction Bid/Proposal Response Date TBD

Agency Address 30-30 Thomson Ave City Long Island City State NY ZIP 11101

Contact Person Elyza Mule Title MWBE Outreach & Compliance Specialist

Telephone 718-391-1268 Email muleel@ddc.nyc.gov

Project Description (attach additional pages if necessary)

This water main project is needed to replace water mains in the boroughs of Queens and The Bronx as directed by distribution engineer. The objective is to improve water quality and residual pressure in the area.

Bidder or proposer ☐ is required OR ☒ is not required to specifically identify the contact information of all M/WBE firms they intend to use as a subcontractor on this contract, including the M/WBE vendor name, address and telephone number in the space provided below in Part 2 Section 4.

M/WBE Participation Goals for Services

Enter the percentage amount for each category or for an unspecified Goal.

Prime Contract Industry: Construction

Category and Breakdown:

Unspecified 11.00 %

Black American ____ %

Hispanic American ____ %

Asian American ____ %

Women ____ %

Total Participation Goals 11.00 %
Line 1

Part 2: M/WBE Participation Plan

(To be completed by the bidder/proposer unless granted a full waiver, which must be submitted with the bid/proposal in lieu of this form)

Section 1: Prime Contractor Contact Information

Tax ID# 11-3172446 FMS Vendor ID# 0000592900

Business Name DeBoe Construction Corp. Contact Person Joel Martins

Business Address 325 Westbury Ave. City Carle Place State NY ZIP 11514

Telephone 516-997-9615 Email joel@deboeconstruction.com

Section 3: Contractor M/WBE Utilization Plan

Please review the Notice to Prospective Contractors for more information on how to obtain credit for M/WBE participation. Check applicable box. The Proposer or Bidder will fulfill the M/WBE Participation Goals:

☐ As an M/WBE Prime Contractor that will self-perform and/or subcontract to other M/WBE firms a portion of the contract the value of which is at least the amount located on Lines 2 or 3 in the panels in Section 2, as applicable. The value of any work subcontracted to non-M/WBE firms will not be credited towards fulfillment of M/WBE Participation Goals. Please check all that apply to Prime Contractor: ☐ MBE ☐ WBE

☐ As a Qualified Joint Venture with an M/WBE partner, in which the value of the M/WBE partner's participation and/or the value of any work subcontracted to other M/WBE firms is at least the amount located on Lines 2 or 3 in the panels in Section 2, as applicable. The value of any work subcontracted to non-M/WBE firms will not be credited towards fulfillment of M/WBE Participation Goals.

☒ As a non-M/WBE Prime Contractor that will enter into subcontracts with M/WBE firms the value of which is at least the amount located on Lines 2 or 3 in the panels in Section 2, as applicable.

Section 2: M/WBE Utilization Goal Calculation

Prime Contractor Adopting Agency Participation Goals
For Prime Contractors (including Qualified Joint Ventures and M/WBE firms) adopting Agency M/WBE Participation Goals.

Total Bid/Proposal Value $ 19,112,819.61

multiplied by x

Total Participation Goals 11.00 %
(Line 1 above)

Calculated M/WBE Participation Amount $ 2,102,410.16
Line 2

OR

Prime Contractor With Partial Waiver Approval Adopting Revised Participation Goals
For Prime Contractors (including Qualified Joint Ventures and M/WBE firms) adopting Revised M/WBE Participation Goals.

Total Bid/Proposal Value $ ____

multiplied by x

Total Revised Participation Goals ____ %

Calculated M/WBE Participation Amount $ ____
Line 3

Tax ID# 11-3172446 APT E-Pin# 85026B0023

Section 4: General Contract Information

What is the expected percentage of the total contract dollar value that you expect to award in subcontracts for services, regardless of M/WBE status? 11.00 %

Enter a brief description of the type(s) and dollar value of subcontracts for all services you plan to subcontract if awarded this contract, along with the anticipated start and end dates for such subcontracts. For each item, indicate whether the work is designated for participation by an M/WBE. Where the contracting agency's solicitation has indicated a requirement that the bidder or proposer specifically identify the contact information of all M/WBEs they intend to use on this contract, vendors must also include the M/WBE vendor name, address and telephone number in the space provided below. Use additional sheets if necessary.

	Description of Work	Start Date (MM/YY)	End Date (MM/YY)	Planned $ Amount	Designated for M/WBE Y	Designated for M/WBE N	M/WBE Vendor Name	M/WBE Address	M/WBE Telephone
1.	Tree Pruning & Removal	TBD /	TBD /	$ 117,525.00	■	☐	Valley Tree & Landscaping, Inc	PO Box 986, Long Beach, NY 11561	(516) 889 - 7534
2.	Tree Consultant	TBD /	TBD /	$ 141,700.00	■	☐	JP Arbor Consulting	183 Grant Ave, New Providence, NJ 07974	(646) 784 - 1689
3.	Photography	TBD /	TBD /	$ 64,000.00	■	☐	Nadine Plaut Construction Photography	1300 Walt Whitman Rd., Suite 101, Melville, NY 11747	(516) 410 - 7378
4.	Asphalt Paving	TBD /	TBD /	$ 519,610	■	☐	TBD		( ) -
5.	Electrical	TBD /	TBD /	$ 18,900	■	☐	Windsor Electrical Contracting, Inc.	95-01 Brisbin St., Jamaica, NY 11435	(718) 850 - 6523
6.	Pavement marking	TBD /	TBD /	$ 326,000	■	☐	TBD		( ) -
7.	Rodent Control	TBD /	TBD /	$ 66,000	■	☐	TBD		( ) -
8.	Environmental Consulting	TBD /	TBD /	$ 155,000	■	☐	Applemon Corp	151 S Mountain Rd. New City, NY 10956	(845) 634 - 858
9.	Hauling	TBD /	TBD /	$ 695,000	■	☐	TBD		( ) -
10.		/	/	$	☐	☐			( ) -

Section 5: Vendor Certification and Required Affirmations

I hereby:

1. *acknowledge my understanding of the M/WBE participation requirements as set forth herein and the pertinent provisions of Section 6-129 of the Administrative Code of the City of New York ("Section 6-129"), and the rules promulgated thereunder;*
2. *affirm that the information supplied in support of this M/WBE Utilization Plan is true and correct;*
3. *agree, if awarded this Contract, to comply with the M/WBE participation requirements of this Contract, the pertinent provisions of Section 6-129, and the rules promulgated thereunder, all of which shall be deemed to be material terms of this Contract;*
4. *agree and affirm that it is a material term of this Contract that the Vendor will award the total dollar value of the M/WBE Participation Goals to certified MBEs and/or WBEs, unless a full waiver is obtained or such Goals are modified by the Agency; and*
5. *agree and affirm, if awarded this Contract, to make all reasonable, good faith efforts to meet the M/WBE Participation Goals, or If a partial waiver is obtained or such Goals are modified by the Agency, to meet the modified Participation Goals by soliciting and obtaining the participation of certified MBE and/or WBE firms.*

Signature _____ Date 2/10/2026

Print Name Joel Martins Title Manager

Mayor's Office of Contract Services

SCHEDULE B – Part 3

Request for Waiver of M/WBE Participation Requirement

Contract Overview

Tax ID#_____ FMS Vendor ID#_____

Business Name_____ Contact Name_____

Email_____ Telephone_____

Contracting Agency_____

APT E-Pin#_____ Bid/Proposal Due Date_____

M/WBE Participation Goals for Services

Defined by AGENCY in bid/ solicitation documents
Percent of the total contract value to be subcontracted to M/WBE vendors for services and/or credited to an M/WBE Qualified Joint Venture.

Unspecified _____%
Black American _____%
Hispanic American _____%
Asian American _____%
Women _____%

Total Participation Goals _____%

Proposed by VENDOR seeking waiver
Percent of the total contract value anticipated in good faith by the bidder/ proposer to be subcontracted to M/WBE businesses for services. Or if M/WBE Qualified Joint Venture, percent of total contract value anticipated to be credited to M/WBE vendor(s).

Unspecified _____%
Black American _____%
Hispanic American _____%
Asian American _____%
Women _____%

Total Participation Goals _____%

Basis for Waiver Request: Check appropriate box & explain in detail below (attach additional pages if needed)

☐ Vendor does not subcontract services, and has the capacity and good faith intention to perform all such work itself with its own employees.

☐ Vendor subcontracts some of this type of work but at a lower % than bid/solicitation describes, and has the capacity and good faith intention to do so on this contract. Identify your subcontracting plan in the vendor certification section below.

☐ Vendor has other legitimate business reasons for proposing the M/WBE Participation Goal requested here. Explain under separate cover.

Vendor Contract History

Using the attached Excel template, list all contracts (for City and Non-City work) performed within the last 3 years and provide the requested information for each contract.

From the list of all contracts, provide reference information below for the 5 most relevant contracts in size, scale and scope (performed for New York City or any other entity) to the bid or proposal for which you are submitting this waiver request. Provide the requested information for each subcontract awarded during the life of the listed reference contract.

Please make sure to highlight the 5 reference contracts provided below among the comprehensive list of all your contract awards within the attached Excel template.

Reference 1

Agency/Organization_____ Contract #_____

Reference Contact_____ Telephone_____ Email_____

Contract Start Date _____ Contract End Date_____ Total Contract Value $_____

Prime Contract description

Did the vendor perform as a Prime Contractor or as a Subcontractor? ☐ Prime Contractor ☐ Subcontractor

Was the Prime Contract subject to any Goals? ☐ City M/WBE Goals ☐ State Goals ☐ Federal Goals ☐ No Applicable Goals

Did the Prime Contractor meet Goal requirements? ☐ Yes ☐ No ☐ N/A

If the Prime Contractor did not meet Goal requirements or contract is still ongoing, please explain

If you performed as the Prime Contractor, please provide a description and value of all work subcontracted to other vendors.

_____ $_____
_____ $_____
_____ $_____
_____ $_____
_____ $_____
_____ $_____
_____ $_____
_____ $_____

Percentage of total contract value subcontracted to other vendors _____%

If you performed as the Subcontractor, please provide a description and value of work areas you self-performed.

_____ $_____

Reference 2

Agency/Organization_____ Contract #_____

Reference Contact_____ Telephone_____ Email_____

Contract Start Date _____ Contract End Date_____ Total Contract Value $_____

Prime Contract description

Did the vendor perform as a Prime Contractor or as a Subcontractor? ☐ Prime Contractor ☐ Subcontractor

Was the Prime Contract subject to any Goals? ☐ City M/WBE Goals ☐ State Goals ☐ Federal Goals ☐ No Applicable Goals

Did the Prime Contractor meet Goal requirements? ☐ Yes ☐ No ☐ N/A

If the Prime Contractor did not meet Goal requirements or contract is still ongoing, please explain

If you performed as the Prime Contractor, please provide a description and value of all work subcontracted to other vendors.

_____ $_____
_____ $_____
_____ $_____
_____ $_____
_____ $_____
_____ $_____
_____ $_____
_____ $_____
_____ $_____

Percentage of total contract value subcontracted to other vendors _____%

If you performed as the Subcontractor, please provide a description and value of work areas you self-performed.

_____ $_____

Reference 3

Agency/Organization_____ Contract #_____

Reference Contact_____ Telephone_____ Email_____

Contract Start Date _____ Contract End Date_____ Total Contract Value $_____

Prime Contract description

Did the vendor perform as a Prime Contractor or as a Subcontractor? ☐ Prime Contractor ☐ Subcontractor

Was the Prime Contract subject to any Goals? ☐ City M/WBE Goals ☐ State Goals ☐ Federal Goals ☐ No Applicable Goals

Did the Prime Contractor meet Goal requirements? ☐ Yes ☐ No ☐ N/A

If the Prime Contractor did not meet Goal requirements or contract is still ongoing, please explain

If you performed as the Prime Contractor, please provide a description and value of all work subcontracted to other vendors.

_____ $_____
_____ $_____
_____ $_____
_____ $_____
_____ $_____
_____ $_____
_____ $_____
_____ $_____
_____ $_____

Percentage of total contract value subcontracted to other vendors _____%

If you performed as the Subcontractor, please provide a description and value of work areas you self-performed.

_____ $_____

Reference 4

Agency/Organization_____ Contract #_____

Reference Contact_____ Telephone_____ Email_____

Contract Start Date _____ Contract End Date_____ Total Contract Value $_____

Prime Contract description

Did the vendor perform as a Prime Contractor or as a Subcontractor? ☐ Prime Contractor ☐ Subcontractor

Was the Prime Contract subject to any Goals? ☐ City M/WBE Goals ☐ State Goals ☐ Federal Goals ☐ No Applicable Goals

Did the Prime Contractor meet Goal requirements? ☐ Yes ☐ No ☐ N/A

If the Prime Contractor did not meet Goal requirements or contract is still ongoing, please explain

If you performed as the Prime Contractor, please provide a description and value of all work subcontracted to other vendors.

_____ $_____

_____ $_____

_____ $_____

_____ $_____

_____ $_____

_____ $_____

Percentage of total contract value subcontracted to other vendors _____%

If you performed as the Subcontractor, please provide a description and value of work areas you self-performed.

_____ $_____

Reference 5

Agency/Organization_____ Contract #_____

Reference Contact_____ Telephone_____ Email_____

Contract Start Date _____ Contract End Date_____ Total Contract Value $_____

Prime Contract description

Did the vendor perform as a Prime Contractor or as a Subcontractor? ☐ Prime Contractor ☐ Subcontractor

Was the Prime Contract subject to any Goals? ☐ City M/WBE Goals ☐ State Goals ☐ Federal Goals ☐ No Applicable Goals

Did the Prime Contractor meet Goal requirements? ☐ Yes ☐ No ☐ N/A

If the Prime Contractor did not meet Goal requirements or contract is still ongoing, please explain

If you performed as the Prime Contractor, please provide a description and value of all work subcontracted to other vendors.

_____ $_____

_____ $_____

_____ $_____

_____ $_____

_____ $_____

_____ $_____

Percentage of total contract value subcontracted to other vendors _____%

If you performed as the Subcontractor, please provide a description and value of work areas you self-performed.

_____ $_____

Vendor Certification

Identify/list all the work areas you intend on subcontracting on the current anticipated contract for which you are submitting this waiver request.

I hereby affirm that the information supplied in support of this waiver request is true and correct, and that this request is made in good faith. I further affirm that the work that I did not list as work that will be subcontracted on this contract for which I am submitting this waiver request is work that I have performed on past contracts and will not subcontract if awarded this contract.

Signature_____ Date_____

Print Name_____ Title_____

Approvals (for Agency completion only)

ACCO Signature_____ Date_____

CCPO Signature_____ Date_____

Waiver Determination

☐ Full Waiver Approved

☐ Waiver Denied

☐ Partial Waiver Approved

Revised Participation Goal _____%

FORM OF BID BOND

KNOW ALL MEN BY THESE PRESENTS. That we, DeBoe Construction Corp.
325 Westbury Avenue
Carle Place, NY 11514

hereinafter referred to as the "Principal", and Fidelity and Deposit Company of Maryland
1299 Zurich Way
Schaumburg, IL 60196-1056

hereinafter referred to as the "Surety" are held and firmly bound to THE CITY OF NEW YORK, hereinafter referred to as the "CITY", or to its successors and assigns in the penal sum of

Ten Percent of Amount Bid

($ 10%), Dollars lawful money of the United States, for the payment of which said sum of money well and truly to be made, we, and each of us, bind ourselves, our heirs, executors, administrators, successors and assigns, jointly and severally, firmly by these presents.

Whereas, the Principal is about to submit (or has submitted) to the City the accompanying proposal, hereby made a part hereof, to enter into a contract in writing for

Installation of Distribution Water Mains - Replace aging water pipes to improve water distribution and quality

NOW, THEREFORE, the conditions of this obligation are such that if the Principal shall not withdraw said Proposal without the consent of the City for a period of forty-five (45) days after the opening of bids and in the event of acceptance of the Principal's Proposal by the City, if the Principal shall:

(a) Within ten (10) days after notification by the City, execute in quadruplicate and deliver to the City all the executed counterparts of the Contract in the form set forth in the Contract Documents, in accordance with the proposal as accepted, and

(b) Furnish a performance bond and separate payment bond, as may be required by the City, for the faithful performance and proper fulfillment of such Contract, which bonds shall be satisfactory in all respects to the City and shall be executed by good and sufficient sureties, and

(c) In all respects perform the agreement created by the acceptance of said Proposal as provided in the Information for Bidders, bound herewith and made a part hereof, or if the City shall reject the aforesaid Proposal, then this obligation shall be null and void; otherwise to remain in full force and effect.

In the event that the Proposal of the Principal shall be accepted and the Contract be awarded to the Principal the Surety hereunder agrees subject only to the payment by the Principal of the premium therefore, if requested by the City, to write the aforementioned performance and payment bonds in the form set forth in the Contract Documents.

It is expressly understood and agreed that the liability of the Surety for any and all claims hereunder shall in no event exceed the penal amount of this obligation as herein stated.

There shall be no liability under this bond if, in the event of the acceptance of the Principal's Proposal by the City, either a performance bond or payment bond, or both, shall not be required by the City on or before the 30th day after the date on which the City signs the Contract.

The surety, for the value received, hereby stipulates and agrees that the obligations of the Surety and its bond shall in no way be impaired or affected by any postponements of the date upon which the City will receive or open bids, or by any extensions of the time within which the City may accept the Principal's Proposal, or by any waiver by the City of any of the requirements of the Information for Bidders, and the Surety hereby waives notice of any such postponements, extensions, or waivers.

IN WITNESS WHEREOF, the Principal and the Surety have hereunto set their hands and seals and such of them as are corporations have caused their corporate seals to be hereto affixed and these presents to be signed by their proper officers the 17th day of November, 2025.

(Seal)

DeBoe Construction Corp. (L.S.)
Principal

By: _____

(Seal)

Fidelity and Deposit Company of Maryland
Surety

By: _____
Theresa A. Lanfranco, Attorney-In-Fact

ACKNOWLEDGMENT OF PRINCIPAL, IF A CORPORATION

State of New York County of Westchester ss:
On this 19 day of November, 2025, before me personally came Paul Scariano to me known, who, being by me duly sworn, did depose and say that he/she/they resides at 88 Rockledge Rd, Brownsville NY that he/she/they is the CEO of DeBue Construction Corp. the corporation described in and which executed the foregoing instrument; that he/she/they knows the seal of said corporation; that one of the seals affixed to said instrument is such seal; that it was so affixed by order of the directors of said corporation, and that he/she/they signed his name thereto by like order.

MARIA T. TIRONE
Notary Public, State of New York
No. 01TI5049851
Qualified in Westchester County
Commission Expires September 25, 2029

Notary Public

ACKNOWLEDGMENT OF PRINCIPAL, IF A PARTNERSHIP

State of _____ County of _____ ss:
On this _____ day of _____, _____, before me personally appeared _____ to me known and known to me to be one of the members of the firm of _____ described in and who executed the foregoing instrument, and he/she/they acknowledged to me that he/she/they executed the same as and for the act and deed of said firm.

_____

Notary Public

ACKNOWLEDGMENT OF PRINCIPAL, IF AN INDIVIDUAL

State of _____ County of _____ ss:
On this _____ day of _____, _____, before me personally appeared _____ to me known and known to me to be the person described in and who executed the foregoing instrument and acknowledged that he/she/they executed the same.

_____

Notary Public

AFFIX ACKNOWLEDGMENTS AND JUSTIFICATION OF SURETIES

Acknowledgment of Surety

State of New York)

County of Nassau) ss.:

On the 17th day of November in the year 2025 before me Cornelia DeSouza, Notary Public personally came to me Theresa A. Lanfranco known, who, being by me duly sworn, did depose and say that he/she resides in Huntington, NY
(if the place of residence is in a city, include the street and street number, if any, thereof); that he/she is the duly appointed Attorney-in-Fact of the ,
Fidelity and Deposit Company of Maryland
the corporation described in and which executed the above instrument; that he/she knows the seal of said corporation; that the seal affixed to said instrument is such corporate seal; that it was so affixed by authority of the board of directors of said corporation, and that he/she signed his/her name thereto by like authority.

Cornelia DeSouza
Notary Public, State of New York
Reg. No. 01DE0002028
Qualified in Nassau County
Commission Expires 02/27/2027

(Notary Seal)

Cornelia DeSouza Notary Public

February 27, 2027
Notary Public Commission Expiration Date

Bond No. **Bid Bond**

Obligee: **NYC Department of Environmental Protection**

ZURICH AMERICAN INSURANCE COMPANY
COLONIAL AMERICAN CASUALTY AND SURETY COMPANY
FIDELITY AND DEPOSIT COMPANY OF MARYLAND
POWER OF ATTORNEY

KNOW ALL MEN BY THESE PRESENTS: That the ZURICH AMERICAN INSURANCE COMPANY, a corporation of the State of New York, the COLONIAL AMERICAN CASUALTY AND SURETY COMPANY, a corporation of the State of Illinois, and the FIDELITY AND DEPOSIT COMPANY OF MARYLAND a corporation of the State of Illinois (herein collectively called the "Companies"), by Christopher Nolan, Vice President, in pursuance of authority granted by Article V, Section 8, of the By-Laws of said Companies, which are set forth on the reverse side hereof and are hereby certified to be in full force and effect on the date hereof, do hereby nominate, constitute, and appoint **Theresa A. Lanfranco**, its true and lawful agent and Attorney-in-Fact, to make, execute, seal and deliver, for, and on its behalf as surety, and as its act and deed: **any and all bonds and undertakings,** and the execution of such bonds or undertakings in pursuance of these presents, shall be as binding upon said Companies, as fully and amply, to all intents and purposes, as if they had been duly executed and acknowledged by the regularly elected officers of the ZURICH AMERICAN INSURANCE COMPANY at its office in New York, New York., the regularly elected officers of the COLONIAL AMERICAN CASUALTY AND SURETY COMPANY at its office in Owings Mills, Maryland., and the regularly elected officers of the FIDELITY AND DEPOSIT COMPANY OF MARYLAND at its office in Owings Mills, Maryland., in their own proper persons.

The said Vice President does hereby certify that the extract set forth on the reverse side hereof is a true copy of Article V, Section 8, of the By-Laws of said Companies, and is now in force.

IN WITNESS WHEREOF, the said Vice-President has hereunto subscribed his/her names and affixed the Corporate Seals of the said **ZURICH AMERICAN INSURANCE COMPANY, COLONIAL AMERICAN CASUALTY AND SURETY COMPANY, and FIDELITY AND DEPOSIT COMPANY OF MARYLAND,** this 7th day of February, A.D. 2025.

ATTEST:
ZURICH AMERICAN INSURANCE COMPANY
COLONIAL AMERICAN CASUALTY AND SURETY COMPANY
FIDELITY AND DEPOSIT COMPANY OF MARYLAND

By: Christopher Nolan
Vice President

By: Dawn E. Brown
Secretary

State of Maryland
County of Baltimore

On this 7th day of February, A.D. 2025, before the subscriber, a Notary Public of the State of Maryland, duly commissioned and qualified, **Christopher Nolan, Vice President and Dawn E. Brown, Secretary** of the Companies, to me personally known to be the individuals and officers described in and who executed the preceding instrument, and acknowledged the execution of same, and being by me duly sworn, deposeth and saith, that he/she is the said officer of the Company aforesaid, and that the seals affixed to the preceding instrument are the Corporate Seals of said Companies, and that the said Corporate Seals and the signature as such officer were duly affixed and subscribed to the said instrument by the authority and direction of the said Corporations.

IN TESTIMONY WHEREOF, I have hereunto set my hand and affixed my Official Seal the day and year first above written.

Genevieve M. Maison
Notary Public
My Commission Expire January 27, 2029

Authenticity of this bond can be confirmed at bondvalidator.zurichna.com or 410-559-8790

EXTRACT FROM BY-LAWS OF THE COMPANIES

"Article V, Section 8, Attorneys-in-Fact. The Chief Executive Officer, the President, or any Executive Vice President or Vice President may, by written instrument under the attested corporate seal, appoint attorneys-in-fact with authority to execute bonds, policies, recognizances, stipulations, undertakings, or other like instruments on behalf of the Company, and may authorize any officer or any such attorney-in-fact to affix the corporate seal thereto; and may with or without cause modify of revoke any such appointment or authority at any time."

CERTIFICATE

I, the undersigned, Vice President of the ZURICH AMERICAN INSURANCE COMPANY, the COLONIAL AMERICAN CASUALTY AND SURETY COMPANY, and the FIDELITY AND DEPOSIT COMPANY OF MARYLAND, do hereby certify that the foregoing Power of Attorney is still in full force and effect on the date of this certificate; and I do further certify that Article V, Section 8, of the By-Laws of the Companies is still in force.

This Power of Attorney and Certificate may be signed by facsimile under and by authority of the following resolution of the Board of Directors of the ZURICH AMERICAN INSURANCE COMPANY at a meeting duly called and held on the 15th day of December 1998.

RESOLVED: "That the signature of the President or a Vice President and the attesting signature of a Secretary or an Assistant Secretary and the Seal of the Company may be affixed by facsimile on any Power of Attorney...Any such Power or any certificate thereof bearing such facsimile signature and seal shall be valid and binding on the Company."

This Power of Attorney and Certificate may be signed by facsimile under and by authority of the following resolution of the Board of Directors of the COLONIAL AMERICAN CASUALTY AND SURETY COMPANY at a meeting duly called and held on the 5th day of May, 1994, and the following resolution of the Board of Directors of the FIDELITY AND DEPOSIT COMPANY OF MARYLAND at a meeting duly called and held on the 10th day of May, 1990.

RESOLVED: "That the facsimile or mechanically reproduced seal of the company and facsimile or mechanically reproduced signature of any Vice-President, Secretary, or Assistant Secretary of the Company, whether made heretofore or hereafter, wherever appearing upon a certified copy of any power of attorney issued by the Company, shall be valid and binding upon the Company with the same force and effect as though manually affixed.

IN TESTIMONY WHEREOF, I have hereunto subscribed my name and affixed the corporate seals of the said Companies, this 17th day of November, 2025.

Mary Jean Pethick
Vice President

TO REPORT A CLAIM WITH REGARD TO A SURETY BOND, PLEASE SUBMIT A COMPLETE DESCRIPTION OF THE CLAIM INCLUDING THE PRINCIPAL ON THE BOND, THE BOND NUMBER, AND YOUR CONTACT INFORMATION TO:

Zurich Surety Claims
1299 Zurich Way
Schaumburg, IL 60196-1056
reportsfclaims@zurichna.com
800-626-4577

Authenticity of this bond can be confirmed at bondvalidator.zurichna.com or 410-559-8790

THE FIDELITY AND DEPOSIT COMPANY

OF MARYLAND
1299 Zurich Way Schaumburg, IL 60196

Statement of Financial Condition
As Of December 31, 2024

ASSETS

Bonds	$ 181,162,758
Stocks	18,212,825
Cash and Short-Term Investments	2,411,982
Reinsurance Recoverable	20,361,515
Federal Income Tax Recoverable	10,150
Other Accounts Receivable	26,284,837
TOTAL ADMITTED ASSETS	$ 248,444,067

LIABILITIES, SURPLUS AND OTHER FUNDS

Reserve for Taxes and Expenses		$ 103,295
Ceded Reinsurance Premiums Payable		45,005,200
Remittances and Items Unallocated		0
Payable to parents, subs and affiliates		0
Securities Lending Collateral Liability		0
TOTAL LIABILITIES		$ 45,108,495
Capital Stock, Paid Up	$ 5,000,000	
Surplus	198,335,572	
Surplus as regards Policyholders		203,335,572
TOTAL		$ 248,444,067

Securities carried at $78,636,217 in the above statement are deposited with various states as required by law.

Securities carried on the basis prescribed by the National Association of Insurance Commissioners. On the basis of market quotations for all bonds and stocks owned, the Company's total admitted assets at December 31, 2024 would be $236,552,538 and surplus as regards policyholders $191,444,043.

I, LAURA J. LAZARCZYK, Corporate Secretary of the FIDELITY AND DEPOSIT COMPANY OF MARYLAND, do hereby certify that the foregoing statement is a correct exhibit of the assets and liabilities of the said Company on the 31st day of December, 2024.

Signed by:
Laura J. Lazarczyk

Corporate Secretary

State of Illinois
City of Schaumburg } SS:

Subscribed and sworn to, before me, a Notary Public of the State of Illinois, in the City of Schaumburg, this 25th day of February, 2025.

Notary Public

Official Seal
KATHERINE R SCHULTZ
Notary Public, State of Illinois
Commission No. 686903
My Commission Expires December 7, 2027

careers
businesses
neighborhoods

Kevin D. Kim
Commissioner

1 Liberty Plaza
11th Floor
New York, NY 10006

212.513.6300 tel
212.618.8891 fax
711 NY Relay

DLS File #223CY391

September 26, 2023

Dominic Parisi
Chief Operating Officer
DeBoe Construction Corp.
325 Westbury Avenue
Carle Place, NY 11514

RE: **Department of Design and Construction (DDC); Project # EC-SEQS24 /PIN #85024B0004;** Reconstruction of Existing Sewers; Borough of Queens; **Contract Value: $13,839,174.49**; **Certificate of Approval.**

Dear Dominic Parisi :

The Department of Small Business Services/Division of Labor Services (DLS) has concluded that **DeBoe Construction Corp.** has met the equal employment opportunity requirements of the City of New York, as stated in Executive Order No. 50 (1980) as amended (E.O. 50), its implementing Rules (Rules), and Chapter 56 of the City Charter (Chapter 56). Consequently, DLS has notified the **Department of Agency** of this determination.

Contingent upon **DeBoe Construction Corp.**'s ongoing compliance with E.O. 50 and Chapter 56, this approval shall be effective for the three (3) year period commencing on **September 26, 2023** and terminating on **September 25, 2026**. **The determination for a three-year approval only exempts contractors from completing the policy and procedure section of the employment report on future contracts within the three-year period.** However, a Construction employment report must be submitted for each new project. In addition, **DeBoe Construction Corp.** must regularly submit to DLS the **Monthly Workforce Utilization Table and Payroll Records** However, a Construction employment report must be submitted for each new project as explained during the E-PAC Training.

It is important that **DeBoe Construction Corp.**, as a New York City contractor, provide equal employment opportunity for all employees and applicants for employment.

Please direct all correspondence to Fareha Mazumder, Compliance Officer. Should you have any questions regarding this letter, you may contact Fareha Mazumder at fmazumder@sbs.nyc.gov.

Very truly yours,

Miri Shpuza/MS
Chief Vendor Compliance Officer
DEFO/DLS

c: Karen General (DDC)
Fareha Mazumder (DSBS)
File

Department of Design and Construction

THE CITY OF NEW YORK
DEPARTMENT OF DESIGN AND CONSTRUCTION
DIVISION OF INFRASTRUCTURE
30-30 THOMSON AVENUE
LONG ISLAND CITY, NY, 11101
TEL: 718.391.1000
WEB: www.nyc.gov/ddc

TO BE FILLED IN BY THE BIDDER:

BIDDER'S NAME:

_____

_____

BID SECURITY (CIRCLE ONE):
BID BOND / CERTIFIED CHECK

NUMBER OF ADDENDUMS RECEIVED AND ATTACHED TO BID:
_____ ADDENDUMS

DDC CLIENT AGENCY:
THE DEPARTMENT OF ENVIRONMENTAL PROTECTION

PREPARED BY:
IN HOUSE

DATE PREPARED:
08/07/2025

VOLUME 2 OF 3

FOR FURNISHING ALL LABOR AND MATERIALS NECESSARY AND REQUIRED FOR:

PROJECT ID: QED1063AC

INFORMATION FOR BIDDERS
CONTRACT
PERFORMANCE AND PAYMENT BONDS
PREVAILING WAGE SCHEDULE

INSTALLATION OF DISTRIBUTION WATER MAINS

TOGETHER WITH ALL WORK INCIDENTAL THERETO

BOROUGH OF QUEENS AND THE BRONX
CITY OF NEW YORK

CITY OF NEW YORK

DEPARTMENT OF DESIGN AND CONSTRUCTION

INFORMATION FOR BIDDERS

October 2025

THIS PAGE INTENTIONALLY LEFT BLANK

CITY OF NEW YORK
DEPARTMENT OF DESIGN AND CONSTRUCTION

INFORMATION FOR BIDDERS

TABLE OF CONTENTS

1.	Description and Location of Work	1
2.	Time and Place for Receipt of Bids	1
3.	Definitions	1
4.	Invitation For Bids and Contract Documents	1
5.	Pre-Bid Conference	1
6.	Agency Contact	1
7.	Bidder's Oath	1
8.	Examination and Viewing of Site, Consideration of Other Sources of Information and Changed Conditions	2
9.	Examination of Proposed Contract	2
10.	Form of Bid	2
11.	Irrevocability of Bid	2
12.	Acknowledgment of Amendments	3
13.	Bid Samples and Descriptive Literature	3
14.	Proprietary Information/Trade Secrets	3
15.	Pre-Opening Modification or Withdrawal of Bids	3
16.	Bid Evaluation and Award	3
17.	Late Bids, Late Withdrawals and Late Modifications	3
18.	Withdrawal of Bids.	3
19.	Mistake in Bids	4
20.	Low Tie Bids	4
21.	Rejection of Bids	4
22.	Right to Appeal Determinations of Non-Responsiveness or Non-Responsibility and Right to Protest Solicitations and Award	5
23.	Affirmative Action and Equal Employment Opportunity	5
25.	Complaints About the Bid Process	6
26.	Bid, Performance and Payment Security	6
27.	Failure to Execute Contract	7
28.	Bidder Responsibilities and Qualifications	7
29.	Employment Report	8
30.	Labor Law Requirements	8
31.	Insurance	8
32.	Lump Sum Contracts	8
33.	Unit Price Contracts	9

34. Excise Tax 9
35. Licenses and Permits 9
36. Multiple Prime Contractors 9
37. Locally Based Enterprise Requirements (LBE) 9
38. Bid Submission Requirements 11
39. Comptroller's Certificate 11
40. Procurement Policy Board Rules 11
41. DDC Safety Requirements 11

1. Description and Location of Work

The description and location of the work for which bids are requested are specified in the PASSPort RFx field "Description".

2. Time and Place for Receipt of Bids

Sealed bids shall be received on or before the date and hour specified in the PASSPort RFx, at which time they will be publicly opened and read aloud in the presence of the Commissioner or the Commissioner's or her representative, and any bidders who may desire to be present.

3. Definitions

The definitions set forth in the Procurement Policy Board Rules shall apply to this Invitation For Bids.

4. Invitation For Bids and Contract Documents

(A) Except for titles, sub-titles, headings, running headlines, tables of contents and indices (all of which are printed herein merely for convenience) the following, except for such portions thereof as may be specifically excluded, shall be deemed to be part of the Contract and the Invitation for Bids.

(1) All provisions required by law to be inserted in this Contract, whether actually inserted or not

(2) The Contract Drawings and Specifications

(3) The General Conditions, the General Requirements and the Special Conditions, if any

(4) The Contract

(5) The Information for Bidders; Request for Proposals; Notice of Solicitation and Proposal For Bids; Bid or Proposal, and the Bid Booklet

(6) The Budget Director's Certificate; all Addenda issued prior to the receipt of the bids; the Notice of Award; Performance and Payment Bonds, if required; and the Notice to Proceed with the Work.

(B) For particulars as to this procurement, including quantity and quality of the purchase, extent of the work or labor to be performed, delivery and performance schedule, and any other special instructions, prospective bidders are referred to the Invitation For Bids Documents. A copy of such documents can be obtained in the PASSPort RFx.

5. Pre-Bid Conference

A pre-bid conference shall be held as set forth in the PASSPort RFx. Nothing stated at the pre-bid conference shall change the terms or conditions of the Invitation For Bids Documents, unless a change is made by written amendment as provided in Section 9 below. Failure to attend a mandatory pre-bid conference shall constitute grounds for the rejection of the bid.

6. Agency Contact

Any questions or correspondence relating to this bid solicitation shall be addressed to the Agency Contact person specified in the PASSPort RFx.

7. Bidder's Oath

(A) The bid shall be properly signed by an authorized representative of the bidder and the bid shall be verified by the written oath of the authorized representative who signed the bid, that the several matters stated and information furnished therein are in all aspects true.

(B) A materially false statement willfully or fraudulently made in connection with the bid or any of the forms completed and submitted with the bid may result in the termination of any Contract between the City and the Bidder. As a result, the Bidder may be barred from participating in future City contracts as well as be subject to possible criminal prosecution.

8. Examination and Viewing of Site, Consideration of Other Sources of Information and Changed Conditions

(A) Pre-Bidding (Investigation) Viewing of Site - Bidders must carefully view and examine the site of the proposed work, as well as its adjacent area, and seek other usual sources of information, for they will be conclusively presumed to have full knowledge of any and all conditions on, about or above the site relating to or affecting in any way the performance of the work to be done under the Contract which were or should have been indicated to a reasonably prudent bidder. To arrange a date for visiting the work site, bidders are to contact the Agency Contact person specified in The PASSPort RFx.

(B) Should the contractor encounter during the progress of the work subsurface conditions at the site materially differing from any shown on the Contract Drawings or indicated in the Specifications or such subsurface conditions as could not reasonably have been anticipated by the contractor and were not anticipated by the City, which conditions will materially affect the cost of the work to be done under the Contract, the attention of the Commissioner must be called immediately to such conditions before they are disturbed. The Commissioner shall thereupon promptly investigate the conditions. If the Commissioner finds that they do so materially differ, or that they could not reasonably have been anticipated by the contractor and were not anticipated by the City, the Contract may be modified with the Commissioner's written approval.

9. Examination of Proposed Contract

(A) Request for Interpretation or Correction: Prospective bidders must examine the Contract Documents carefully and before bidding must request the Commissioner in writing for an interpretation or correction of every patent ambiguity, inconsistency or error therein which should have been discovered by a reasonably prudent bidder. Such interpretation or correction, as well as any additional contract provisions the Commissioner may decide to include, will be issued in writing by the Commissioner as an addendum to the Contract, which will be transmitted to each person recorded as having received a copy of the Contract Documents from the Department. Transmission of such addendum will be by mail, e-mail, facsimile or hand delivery. Such addendum will also be posted at the place where the Contract Documents are available for the inspection of prospective bidders. Upon transmission as provided for herein, such addendum shall become a part of the Contract Documents, and binding on all bidders, whether or not actual notice of such addendum is shown.

(B) Only Commissioner's Interpretation or Correction Binding: Only the written interpretation or correction so given by the Commissioner shall be binding, and prospective bidders are warned that no other officer, agent or employee of the City is authorized to give information concerning, or to explain or interpret, the Contract.

(C) Documents given to a subcontractor for the purpose of soliciting the subcontractor's bid shall include either a copy of the bid cover sheet or a separate information sheet setting forth the project name, the Contract number (if available), the contracting agency and the Project's location.

10. Form of Bid

Each bid must be submitted upon the prescribed form and must contain: a) the name, residence and place of business of the person or persons making the same; b) the names of all persons interested therein, and if no other person is so interested, such fact must be distinctly stated; c) a statement to the effect that it is made without any connection with any other person making a bid for the same purpose and that it is in all respects fair and without collusion or fraud; d) a statement that no Council member or other officer or employee or person whose salary is payable in whole or part from the City Treasury is directly or indirectly interested therein or in the supplies, materials or equipment and work or labor to which it relates, or in any portion of the profits thereof; e) a statement that the bidder is not in arrears to the City or to any agency upon a debt or contract or taxes, and is not a defaulter as surety or otherwise upon any obligation to the City to any agency thereof, except as set forth in the bid.

11. Irrevocability of Bid

The prices set forth in the bid cannot be revoked and shall be effective until the award of the Contract, unless the bid is withdrawn as provided for in Sections 15 and 18 below.

12. Acknowledgment of Amendments

The receipt of any amendment to the Contract Documents shall be acknowledged by the bidder in its bid submission.

13. Bid Samples and Descriptive Literature

Bid samples and descriptive literature shall not be submitted by the bidder, unless expressly requested elsewhere in the Contract or Contract Documents. Any unsolicited bid samples or descriptive literature which are submitted shall not be examined or tested and shall not be deemed to vary any of the provisions of this Contract.

14. Proprietary Information/Trade Secrets

(A) The bidder shall identify those portions of the bid which it deems to be confidential, proprietary information or trade secrets, and provide justification why such materials shall not be disclosed by the City. All such materials shall be clearly indicated by stamping the pages on which such information appears, at the top and bottom thereof with the word "Confidential". Such materials stamped "Confidential" must be easily separable from the non-confidential sections of the bid.

(B) All such materials so indicated shall be reviewed by the Agency and any decision not to honor a request for confidentiality shall be communicated in writing to the bidder. For those bids which are unsuccessful, all such confidential materials shall be returned to the bidder. Prices, makes and model or catalog numbers of the items offered, deliveries, and terms of payment shall be publicly available after bid opening, regardless of any designation of confidentiality made by the bidder.

15. Pre-Opening Modification or Withdrawal of Bids

Bids may be modified or withdrawn by written notice received in the office designated in the PASSPort RFx, before the time and date set for the bid opening. If a bid is withdrawn in accordance with this Section, the bid security, if any, shall be returned to the bidder.

16. Bid Evaluation and Award

In accordance with the New York City Charter, the Procurement Policy Board Rules and the terms and conditions of this Invitation For Bids, this Contract shall be awarded, if at all, to the responsible bidder whose bid meets the requirements and evaluation criteria set forth in the Invitation For Bids, and whose bid price is either the most favorable bid price or, if the Invitation For Bids so states, the most favorable evaluated bid price. A bid may not be evaluated for any requirement or criterion that is not disclosed in the Invitation For Bids.

Restriction: No negotiations with any bidder shall be allowed to take place except under the circumstances and in the manner set forth in Section 21. Nothing in this Section shall be deemed to permit a contract award to a bidder submitting a higher quality item than that designated in the Invitation For Bids, if that bid is not also the most favorable bid.

17. Late Bids, Late Withdrawals and Late Modifications

Any bid received at the place designated in the solicitation after the time and date set for receipt of bids is late and shall not be considered. Any request for withdrawal or modification received at the place designated in the solicitation after the time and date set for receipt of bids is late and shall not be considered. The exception to this provision is that a late modification of a successful bid that makes the bid terms more favorable to the City shall be considered at any time it is received.

18. Withdrawal of Bids.

Except as provided for in Section 15, above, a bidder may not withdraw its bid before the expiration of forty-five (45) days after the date of the opening of bids; thereafter, a bidder may withdraw its bid only in writing and in advance of an actual award. If within sixty (60) days after the execution of the Contract, the Commissioner fails to fix the date for commencement of work by written notice to the bidder, the bidder at the bidder's option, may ask to be relieved of the bidder's obligation to perform the work called for by written notice to the Commissioner. If such notice is given to the Commissioner, and the request to withdraw is granted, the bidder waives all claims in connection with this Contract.

19. Mistake in Bids

(A) Mistake Discovered Before Bid Opening: A bidder may correct mistakes discovered before the time and date set for bid opening by withdrawing or correcting the bid as provided in Section 15 above.

(B) Mistakes Discovered Before Award

(1) In accordance with General Municipal Law (Section 103, subdivision 11), where a unilateral error or mistake is discovered in a bid, such bid may be withdrawn upon written approval of the Agency Chief Contracting Officer if the following conditions are met:

(a) The mistake is known or made known to the agency prior to the awarding of the Contract or within 3 days after the opening of the bid, whichever period is shorter; and

(b) The price bid was based upon an error of such magnitude that enforcement would be unconscionable; and

(c) The bid was submitted in good faith and the bidder submits credible evidence that the mistake was a clerical error as opposed to a judgment error; and

(d) The error in the bid is actually due to an unintentional and substantial arithmetic error or an unintentional omission of a substantial quantity of work, labor, material or services made directly in the compilation of the bid, which unintentional arithmetic error or unintentional omission can be clearly shown by objective evidence drawn from inspection of the original work paper, documents, or materials used in the preparation of the bid sought to be withdrawn; and

(e) It is possible to place the agency in the same position as existed prior to the bid.

(2) Unless otherwise required by law, the sole remedy for a bid mistake in accordance with this Article shall be withdrawal of the bid, and the return of the bid bond or other security, if any, to the bidder. Thereafter, the agency may, in its discretion, award the Contract to the next lowest bidder or rebid the Contract. Any amendment to or reformation of a bid or a Contract to rectify such an error or mistake therein is strictly prohibited.

(3) If the mistake and the intended correct bid are clearly evident on the face of the bid document, the bid shall be corrected to the intended correct bid and may not be withdrawn. Examples of mistakes that may be corrected are typographical errors, errors in extending unit prices, transposition errors and arithmetical errors.

20. Low Tie Bids

(A) When two or more low responsive bids from responsible bidders are identical in price, meeting all the requirements and criteria set forth in the Invitation For Bids, the Agency Chief Contracting Officer will break the tie in the following manner and order of priority:

(1) Award to a certified New York City small, minority or woman-owned business entity bidder;

(2) Award to a New York City bidder;

(3) Award to a certified New York State small, minority or woman-owned business bidder;

(4) Award to a New York State bidder.

(B) If two or more bidders still remain equally eligible after application of paragraph (A) above, award shall be made by a drawing by lot limited to those bidders. The bidders involved shall be invited to attend the drawing. A witness shall be present to verify the drawing and shall certify the results on the bid tabulation sheet.

21. Rejection of Bids

(A) Rejection of Individual Bids: The Agency may reject a bid if:

(1) The bidder fails to furnish any of the information required pursuant to Section 24 or 28 hereof; or if

(2) The bidder is determined to be not responsible pursuant to the Procurement Policy Board Rules; or if

(3) The bid is determined to be non-responsive pursuant to the Procurement Policy Board Rules; or if

(4) The bid, in the opinion of the Agency Chief Contracting Officer, contains unbalanced bid prices and is thus non-responsive, unless the bidder can show that the prices are not unbalanced for the probable required quantity of items, or if the imbalance is corrected pursuant to Section 15.

(B) Rejection of All Bids: The Agency, upon written approval by the Agency Chief Contracting Officer, may reject all bids and may elect to resolicit bids if in its sole opinion it shall deem it in the best interest of the City so to do.

(C) Rejection of All Bids and Negotiation With All Responsible Bidders: The Agency Head may determine that it is appropriate to cancel the Invitation For Bids after bid opening and before award and to complete the acquisition by negotiation. This determination shall be based on one of the following reasons:

(1) All otherwise acceptable bids received are at unreasonable prices, or only one bid is received and the Agency Chief Contracting Officer cannot determine the reasonableness of the bid price, or no responsive bid has been received from a responsible bidder; or

(2) In the judgment of the Agency Chief Contracting Officer, the bids were not independently arrived at in open competition, were collusive, or were submitted in bad faith.

(B) When the Agency has determined that the Invitation for Bids is to be canceled and that use of negotiation is appropriate to complete the acquisition, the contracting officer may negotiate and award the Contract without issuing a new solicitation, subject to the following conditions:

(1) prior notice of the intention to negotiate and a reasonable opportunity to negotiate have been given by the contracting officer to each responsible bidder that submitted a bid in response to the Invitation for Bids;

(2) the negotiated price is the lowest negotiated price offered by a responsible bidder; and

(3) the negotiated price is lower than the lowest rejected bid price of a responsible bidder that submitted a bid in response to the Invitation for Bids.

22. Right to Appeal Determinations of Non-Responsiveness or Non-Responsibility and Right to Protest Solicitations and Award

The bidder has the right to appeal a determination of non-responsiveness or non-responsibility and has the right to protest a solicitation and award. For further information concerning these rights, the bidder is directed to the Procurement Policy Board Rules.

23. Affirmative Action and Equal Employment Opportunity

This Invitation For Bids is subject to applicable provisions of Federal, State and Local Laws and executive orders requiring affirmative action and equal employment opportunity.

24. PASSPort COMPLIANCE

All vendors that intend to do business with the City of New York must complete a disclosure process in order to be considered for a contract. This disclosure process was formerly completed using Vendor Information Exchange System (VENDEX) paper-based forms. The City of New York has moved collection of vendor disclosure information online. In early August 2017, the New York City Mayor's Office of Contract Services (MOCS) launched the Procurement and Sourcing Solutions Portal (PASSPort), a new online procurement system that replaced the paper-VENDEX process. In anticipation of awards, all bidders must create online accounts in the new PASSPort system, and file all disclosure information using PASSPort. Paper submissions, including certifications of no changes to existing VENDEX packages, will not be accepted in lieu of complete online filings using PASSPort.

All vendors that intend to do business with the City, but specifically those that fall into any of the following

categories, are required to enroll:

- Have a pending award with a City Agency; or
- Hold a current contract with a City Agency and have either an expiring VENDEX or expiring Certificate of No Change.

The Department of Design and Construction (DDC) and MOCS hereby notifies all proposers that the PASSPort system is available, and that disclosure filing completion is required prior to any award through this competitive bid.

To enroll in PASSPort and to access the PASSPort website (including online training), please visit www.nyc.gov/passport. Contact MOCS at passport@mocs.nyc.gov for additional information and technical support.

25. Complaints About the Bid Process

The New York City Comptroller is charged with the audit of contracts in New York City. Any vendor who believes that there has been unfairness, favoritism or impropriety in the bid process should inform the Comptroller, Office of Contract Administration, One Centre Street, Room 835, New York, New York; telephone number (212)669-2323.

26. Bid, Performance and Payment Security

(A) Bid Security: Each bid must be accompanied by bid security in an amount and type specified in the PASSPort RFx questionnaire. The bid security shall assure the City of New York of the adherence of the bidder to its proposal, the execution of the Contract, and the furnishing of Performance and Payment Bonds by the bidder, if required in the PASSPort RFx. Bid security shall be returned to the bidder as follows:

(1) Within ten (10) days after the bid opening, the Comptroller will be notified to return the deposits of all but the three (3) lowest bidders. Within five (5) days after the award, the Comptroller will be notified to return the deposits of the remaining two unsuccessful bidders.

(2) Within five (5) days after the execution of the Contract and acceptance of the Contractor's bonds, the Comptroller will be notified to return the bid security of the successful bidder or, if performance and payment bonds are not required, only after the sum retained under Article 21 of the Contract equals the amount of the bid security.

(3) Where all bids are rejected, the Comptroller will be notified to return the deposit of the three (3) lowest bidders at the time of rejection.

(B) Performance and Payment Security: Performance and Payment Security must be provided in an amount and type specified in the PASSPort RFx. The performance and payment security shall be delivered by the contractor prior to or at the time of execution of the Contract. If a contractor fails to deliver the required performance and payment security, its bid security shall be enforced, and an award of Contract may be made to the next lowest responsible and responsive bidder, or the contract may be rebid.

(C) Acceptable Types of Security: Acceptable types of security for bids, performance, and payment shall be limited to the following:

(1) a one-time bond in a form satisfactory to the City;

(2) a bank certified check or money order;

(3) obligations of the City of New York; or

(4) other financial instruments as determined by the Office of Construction in consultation with the Comptroller.

Whenever the successful bidder deposits obligations of the City of New York as performance and payment security, the Comptroller may sell and use the proceeds thereof for any purpose for which the principal or surety on such bond would be liable under the terms of the Contract. If the money is deposited with the Comptroller, the successful bidder shall not be entitled to receive interest on such money from the City.

(D) Form of Bonds: Security provided in the form of bonds must be prepared on the form of bonds authorized by the City of New York. Forms for bid, performance, and payment bonds are included in the Invitation for Bids Documents. Such bonds must have as surety thereunder such surety company or companies as are: (1) approved by the City of New York; (2) authorized to do business in the State of New York, and (3) approved by the Department of the Treasury of the United States. Premiums for any required bonds must be included in the base bid.

The bidder is advised that submission of a bid bond where the surety on such bond fails to meet the criteria set forth herein, shall result in the rejection of the bid as non-responsive.

The Department of the Treasury of the United States advises that information concerning approved surety companies may be obtained as follows: (1) from the Government Printing Office at 215-364-6465; (2) through the Internet at https://www.fiscal.treasury.gov/surety-bonds/.

(E) Power of Attorney: Attorneys in fact who sign bid, performance, or payment bonds must file with each bond a certified copy of their power of attorney to sign said bonds.

27. Failure to Execute Contract

In the event of failure of the successful bidder to execute the Contract and furnish the required security within ten (10) days after notice of the award of the Contract, the deposit of the successful bidder or so much thereof as shall be applicable to the amount of the award made shall be retained by the City, and the successful bidder shall be liable for and hereby agrees to pay on demand the difference between the price bid and the price for which such Contract shall be subsequently awarded, including the cost of any required reletting and less the amount of such deposit. No plea of mistake in such accepted bid shall be available to the bidder for the recovery of the deposit or as a defense to any action based upon such accepted bid. Further, should the bidder's failure to comply with this Section cause any funding agency, body or group (Federal, State, City, Public, Private, etc.) to terminate, cancel or reduce the funding on this project, the bidder in such event shall be liable also to the City for the amount of actual funding withdrawn by such agency on this project, less the amount of the forfeited deposit.

28. Bidder Responsibilities and Qualifications

(A) Bidders must include with their bids all information necessary for a determination of bidder responsibility, as set forth in the Specifications.

(B) The Agency may require any bidder or prospective bidder to furnish all books of account, records, vouchers, statements or other information concerning the bidder's financial status for examination as may be required by the Agency to ascertain the bidder's responsibility and capability to perform the Contract. If required, a bidder must also submit a sworn statement setting forth such information as the Agency may require concerning present and proposed plant and equipment, the personnel and qualifications of the bidder’s working organizations, prior experience and performance record.

(C) Oral Examination on Qualifications: In addition thereto, and when directed by the Agency, the bidder, or a responsible officer, agent or employee of the bidder, must submit to an oral examination to be conducted by the Agency in relation to the bidder’s proposed tentative plan and schedule of operations, and such other matters as the Agency may deem necessary in order to determine the bidder's ability and responsibility to perform the work in accordance with the Contract. Each person so examined must sign and verify a stenographic transcript of such examination noting thereon such corrections as such person may desire to make.

(D) If the bidder fails or refuses to supply any of the documents or information set forth in paragraph (B) hereof or fails to comply with any of the requirements thereof, the Agency may reject the bid.

29. Employment Report

In accordance with Executive Order No. 50 (1980) as modified by Executive Order 108 (1986), the filing of a completed Employment Report (ER) is a requirement of doing business with the City of New York for construction contractors with contracts of $1,000,000 or more and subcontractors with construction subcontracts of $750,000 or more. The required forms and information are included in the PASSPort Vendor Profile.

30. Labor Law Requirements

(A) General: The successful bidder will be required to comply strictly with all Federal, State and local labor laws and regulations.

(B) New York State Labor Law: This Contract is subject to New York State Labor Law Section 220, which requires that construction workers on the site be paid prevailing wages and supplements. The Contractor is reminded that all wage provisions of this Contract will be enforced strictly and failure to comply will be considered when evaluating performance. Noncompliance may result in the contractor being debarred by the City from future contracts. Complaints filed with the Comptroller may result in decisions which may debar a contractor from bidding contracts with any state governmental entity and other political subdivisions.

(C) Records: The Contractor is expected to submit accurate payroll reports and other required documents and verify attendance and job classifications being utilized in compliance with the law, Contract provisions and agency procedures.

31. Insurance

(A) Bidders are advised that the insurance requirements contained herein are regarded as material terms of the Contract. As required by Article 22 of the Contract, the contractor must effect and maintain with companies licensed and authorized to do business in the State of New York, the types of insurance set forth therein, when required by and in the amounts set forth in Schedule A of the General Conditions. Such required insurance must be provided from the date the contractor is ordered to commence work and up to the date of final acceptance of all required work.

(B) The contractor must, within ten days of receipt of the notice of award, submit the following insurance documentation: (a) original certificate of insurance for general liability in the amount required by Schedule A of the General Conditions, and (b) original certificates of insurance or other proof of coverage for workers' compensation and disability benefits, as required by Section 57 of the New York State Workers' Compensation Law and Section 220 of the Disability Benefits Law.

32. Lump Sum Contracts

(A) Comparison of Bids: Bids on Lump Sum Contracts will be compared on the basis of the lump sum price bid, adjusted for alternate prices bid, if any.

(B) Lump Sum Bids for "General Construction Work" which include excavation shall include all necessary excavation work defined in the Specifications as being included in the lump sum bid. The bidder shall also bid a unit price for the additional cost of excavating material which is defined in the Specifications as excavation for which additional payment will be made. The total estimated additional cost of removing such material will be taken as the quantity set forth in the Engineer's Estimate multiplied by the unit price bid. This total estimated cost of additional excavation shall be added to the lump sum bid for the General Construction Work for the purpose of comparing bids to determine the low bidder.

(C) Variations from Engineer's Estimate: The Engineer's Estimate of the quantity of excavation for which additional payment will be made is approximate only and is given solely to be used as a uniform basis for the comparison of bids and such estimate is not to be considered as part of this contract. The quantities actually required to complete the contract work may be more or less than the quantities in the Engineer's Estimate and, if so, no action for damages or for loss of profits shall accrue to the contractor by reason thereof.

33. Unit Price Contracts

(A) Comparison of Bids: Bids on Unit Price Contracts will be compared on the basis of a total estimated price, arrived at by taking the sum of the estimated quantities of such items, in accordance with the Engineer's Estimate of Quantities set forth in the Bid Schedule, multiplied by the corresponding unit prices, and including any lump sum bids on individual items.

(B) Variations from Engineer's Estimate: Bidders are warned that the Engineer's Estimate of Quantities on the various items of work and materials is approximate only, given solely to be used as a uniform basis for the comparison of bids, and is not be considered part of this contract. The quantities actually required to complete the contract work may be less or more than so estimated, and if so, no action for damages or for loss of profits shall accrue to the contractor by reason thereof.

(C) Overruns: The terms and conditions applicable to overruns of unit price items are set forth in Article 26 of the Contract.

34. Excise Tax

Bidders are referred to the Specifications for information on Federal Excise Tax exemptions.

35. Licenses and Permits

The successful bidder will be required to obtain all necessary licenses and permits necessary to perform the work.

36. Multiple Prime Contractors

If more than one prime contractor will be involved on this project, all contractors are required to examine the Invitation for Bid packages for all other parts of the project.

37. Locally Based Enterprise Requirements (LBE)

This Contract is subject to the requirements of Administrative Code, Section 6-108.1, and the regulations promulgated thereunder. No construction contract will be awarded unless and until these requirements have been complied with in their entirety. The bidder is advised of the provisions set forth below, as well as the provisions with respect to the Locally Based Enterprise Program contained in Article 67 of the Contract. The contractor is advised that:

(A) If any portion of the Contract is subcontracted, not less than ten percent of the total dollar amount of the contract shall be awarded to locally based enterprises ("LBEs"); except, where less than ten percent of the total dollar amount of the Contract is subcontracted, such lesser percentage shall be so awarded.

(B) No contractor shall require performance and payment bonds from LBE subcontractors.

(C) No Contract shall be awarded unless the contractor first identifies in its bid:

(1) the percentage, dollar amount and type of work to be subcontracted; and

(2) the percentage, dollar amount and type of work to be subcontracted to LBEs.

(D) Within ten calendar days after notification of low bid, the apparent low bidder shall submit an "LBE Participation Schedule" to the contracting agency. If such schedule does not identify sufficient LBE subcontractors to meet the requirements of Administrative Code Section 6-108.1, the apparent low bidder shall submit documentation of its good faith efforts to meet such requirements.

(1) The "LBE Participation Schedule" shall include:

(a) the name and address of each LBE that will be given a subcontract,

(b) the percentage, dollar amount and type of work to be subcontracted to the LBE, and

(c) the dates when the LBE subcontract work will commence and end.

(2) The following documents shall be attached to the "LBE Participation Schedule":

(a) verification letters from each subcontractor listed in the "LBE Participation Schedule" stating that the LBE will enter into a formal agreement for work,

(b) certification documents of any proposed LBE subcontractor which is not on the LBE certified list, and

(c) copies of the certification letter of any proposed subcontractor which is an LBE.

(3) Documentation of good faith efforts to achieve the required LBE percentage shall include as appropriate but not limited to the following:

(a) attendance at prebid meetings, when scheduled by the agency, to advise bidders of contract requirements;

(b) advertisement where appropriate in general circulation media, trade association publications and small business media of the specific subcontracts that would be at least equal to the percentage goal for LBE utilization specified by the contractor;

(c) written notification to association of small, minority and women contractors soliciting specific subcontractors;

(d) written notification by certified mail to LBE firms that their interest in the contract is solicited for specific work items and their estimated values;

(e) demonstration of efforts made to select portions of the work for performance by LBE firms in order to increase the likelihood of achieving the stated goal;

(f) documented efforts to negotiate with LBE firms for specific subcontracts, including at a minimum:

(i) The names, address and telephone numbers of LBE firms that are contacted;

(ii) A description of the information provided to LBE firms regarding the plans and specifications for portions of the work to be performed;

(iii) Documentation showing that no reasonable price can be obtained from LBE firms;

(iv) A statement of why agreements with LBE firms were not reached;

(g) a statement of the reason for rejecting any LBE firm which the contractor deemed to be unqualified; and

(h) documentation of efforts made to assist the LBE firms contacted that needed assistance in obtaining required insurance.

(E) Unless otherwise waived by the Commissioner with the approval of the Office of Economic and Financial Opportunity, failure of a proposed contractor to provide the information required by paragraphs (C) and (D) above may render the bid non-responsive and the Contract may not be awarded to the bidder. If the contractor states that it will subcontract a specific portion of the work, but can demonstrate despite good faith efforts it cannot achieve its required LBE percentage for subcontracted work until after award of Contract, the Contract may be awarded, subject to a letter of compliance from the contractor stating that it will comply with Administrative Code Section 6-108.1 and subject to approval by the Commissioner. If the contractor has not met its required LBE percentage prior to award, the contractor shall demonstrate that a good faith effort has been made subsequent to award to obtain LBEs on each subcontract until its meets the required percentage.

(F) When a bidder indicates prior to award that no work will be subcontracted, no work may be subcontracted without the prior written approval of the Commissioner, which shall be granted only if the contractor in good faith seeks LBE subcontractors at least six weeks prior to the start of work.

(G) The contractor may not substitute or change any LBE which was identified prior to award of the contract without the written permission of the Commissioner. The contractor shall make a written application to the Commissioner for permission to make such substitution or change, explaining why the contractor needs to change its LBE subcontractor and how the contractor will meet its LBE subcontracting requirement. Copies of such application must be served on the originally identified LBE by certified mail return receipt requested, as well as the proposed substitute LBE. The Commissioner shall determine whether or not to grant the contractor's request for substitution.

38. Bid Submission Requirements

The Bid Submission Requirements are set forth in the PASSPort RFx.

39. Comptroller's Certificate

This Contract shall not be binding or of any force unless it is registered by the Comptroller in accordance with Section 328 of the City Charter and the Procurement Policy Board Rules. This Contract shall continue in force only after annual appropriation of funds by the City of New York and certification as hereinabove set forth.

40. Procurement Policy Board Rules

This Invitation For Bids is subject to the Rules of the Procurement Policy Board of the City of New York. In the event of a conflict between said Rules and a provision of this Invitation For Bids, the Rules shall take precedence.

41. DDC Safety Requirements

The DDC Safety Requirements apply to the work to be performed pursuant to the Contract. The DDC Safety Requirements are set forth on the following pages.

THIS PAGE INTENTIONALLY LEFT BLANK

CITY OF NEW YORK
DEPARTMENT OF DESIGN AND CONSTRUCTION
CONTRACT SAFETY REQUIREMENTS

---

1. POLICY ON SITE SAFETY
2. PURPOSE
3. DEFINITIONS
4. RESPONSIBILITIES
5. SAFETY QUESTIONNAIRE
6. SITE SAFETY PLAN
7. KICK-OFF/PRE-CONSTRUCTION MEETINGS
8. SAFETY COMPLIANCE DURING WORK IN PROGRESS
9. SAFETY PERFORMANCE EVALUATION

1. POLICY ON SITE SAFETY

1.1 The City of New York Department of Design and Construction (DDC) is committed to preventing workplace injuries and illnesses, as well as managing risks associated with construction activities. This commitment includes protecting both the workers involved in DDC projects and the general public.

1.2 Construction sites are dynamic environments where workers perform a variety of tasks that may expose them to numerous safety hazards. These hazards include, but are not limited to, falling objects, working at heights on rooftops or scaffolding, operating heavy construction equipment, and using temporary electrical circuits in damp conditions while handling electrical tools and machinery. DDC project sites encompass a wide range of construction activities, including construction of new buildings, renovation of existing facilities, major repairs or modifications to building systems, and horizontal infrastructure work such as installation of water and sewer mains, road and sidewalk repairs, and other street and roadway improvements across the five Boroughs.

1.3 The Contract Safety Requirements for construction projects outlines the safety, health, and environmental policies and procedures applicable to all Contractors working on DDC construction projects. While this document provides guidance on key safety protocols, it remains the sole responsibility of Contractors, their staff, and any subcontractors to fully comply with the safety requirements below.

1.4 All work performed on DDC construction sites must adhere to the most current versions of applicable federal, state, and city laws, rules, and regulations, including, but not limited to, those referenced in this document. In addition, Contractors, subcontractors, and Construction Manager firms must comply with any newly issued or revised laws, regulations, rules, and contract requirements that arise during the course of the project. All costs associated with such compliance are the sole responsibility of the Contractor and Construction Manager firms and will not be reimbursed by DDC.

- Code of Federal Regulations, Title 29, Part 1926 (29 CFR 1926) and other applicable standards of U.S. Occupational Safety and Health Administration (OSHA)
- Federal Highway Administration – Manual on Uniform Traffic Control Devices (MUTCD)
- New York Codes, Rules and Regulations (NYCRR), Title 12, Part 23 – Protection in Construction, Demolition and Excavation Operations
- New York Codes, Rules and Regulations (NYCRR), Title 16, Part 753 – Protection of Underground Facilities
- New York City Administrative Code, Title 28 – New York City Construction Codes
- Rules of the City of New York, Title 15, Chapter 13 – Rules Pertaining to the Prevention of the Emission of Dust from Construction Related Activities
- Rules of the City of New York, Title 15, Chapter 28 – Citywide Construction Noise Mitigation
- Rules of the City of New York, Title 34 Chapter 2 – NYCDOT Highway Rules
- New York City Building Code, Chapter 33 – Fire Safety During Construction, Alteration, and Demolition
- New York City Fire Code

2. PURPOSE

2.1 The purpose of these Contract Safety Requirements is to ensure that all work performed by Contractors and their subcontractors on DDC projects is carried out in full compliance with applicable federal, state, and city laws, rules, and regulations. Contractors are expected to provide effective supervision of both their own personnel and those of their subcontractors, and to maintain full accountability for their safety performance.

2.2 Contractors are also responsible for identifying, minimizing, and eliminating safety and health hazards that may impact both the jobsite and the general public. This responsibility must be fulfilled through a structured approach that includes planning, inspections, audits, and timely corrective actions. The primary objective is to manage risks effectively and reduce the occurrence of injuries, illnesses, incidents, and accidents involving Contractor and

subcontractor personnel, Construction Manager and DDC staff, and members of the public while also preventing damage to city-owned and private property to the greatest extent possible.

2.3 Construction Manager (CM) firms share responsibility for maintaining safety standards on DDC projects. This includes actively monitoring Contractor and subcontractor performance, enforcing compliance with safety requirements, identifying potential risks, and working collaboratively with both DDC and the Contractor to implement corrective actions. CM must ensure that safety policies are consistently upheld throughout all phases of the project. They are also expected to facilitate continuous communication regarding jobsite conditions and safety concerns to support a safe and responsive work environment.

3. DEFINITIONS

3.1 "Accident" means an unplanned project related event that results in a fatality or personal injury requiring medical treatment beyond first aid.

3.2 "Agency" means a city, county, borough or other office, position, department, division, Office, board or commission, or a corporation, institution or agency of government, the expenses of which are paid in whole or in part from the City treasury.

3.3 "Agency Chief Contracting Officer" or "ACCO" means the position delegated authority by the Agency Head to organize and supervise the procurement activity of subordinate Agency staff in conjunction with the City Chief Procurement Officer.

3.4 "Auditor" means a representative of the Office of Construction Safety, Quality Assurance, or Environmental & HazMat Services who conducts inspection and assessment services to verify compliance and promote health and safety on active DDC construction projects. The responsibilities of the Auditor include performing site audits; reviewing safety plans, construction permits, and drawings; verifying Contractor compliance with applicable federal, state, and city laws, rules, and regulations; ensuring adherence to Agency requirements; and providing technical advice and assistance to project staff.

3.5 "Competent Person" means an individual as defined by OSHA who is capable of identifying existing and foreseeable hazards in the surroundings or working conditions that are unsanitary, hazardous, or dangerous to employees or the general public, and who is authorized to take prompt corrective measures to eliminate such hazards. The Competent Person shall have successfully completed, at a minimum, an authorized 30-hour OSHA Construction Safety Course applicable to construction projects and shall possess a valid Site Safety Training (SST) Supervisor Card for projects where such certification is required. Multiple Competent Persons may be required based on the scope and complexity of work.

3.6 "Construction Manager (CM) means a representative, duly designated to act on the Commissioner's behalf at the Project Site. This role may be fulfilled by a vendor retained by the DDC, which may include, but is not limited to, a Construction Management firm, a Resident Engineer Inspection (REI) firm, or a Project Management/Construction Management (PMCM) firm, depending on the project delivery method and contract type.

3.7 "Contractor" means any individual or entity that enters into an agreement with the DDC to perform construction work. Depending on the project delivery method and contract type, the responsible party may include, but is not limited to, a Contractor, Design-Builder, or Construction Manager-Builder (CM-Builder).

3.8 "Corrective Action Plan" means a structured approach to address unsafe conditions through evaluation, determination of root cause, and specific, step-by-step actions to mitigate the unsafe condition and prevent recurrence.

3.9 "Daily Safety Job Briefing" means a jobsite safety meeting given to all jobsite personnel by the Contractor at the Project Site on a daily basis before work begins, and/or whenever hazards or potential hazards are identified during the course of work. The purpose of the Daily Safety Job Briefing is to discuss the scheduled activities for the day, the hazards associated with those activities, activity-specific safety procedures, and the JHA relevant to the

planned construction work. Daily Safety Job Briefings shall be documented and made available upon request at the jobsite. Documentation shall include, at a minimum: the topics discussed; the name and signature of the individual conducting the briefing; the names and signatures of all attendees; the name of the designated Competent Person; the names of the Contractor and subcontractor(s); the DDC Project ID; and the date, time, and location of the briefing.

3.10 "Department" or "DDC" means the Department of Design and Construction of the City of New York acting by and through the Commissioner thereof, or his/her duly authorized representative.

3.11 “Job Hazard Analysis (JHA)” means a process used to identify major job tasks and any potential site-specific hazards that may be present during construction, and to establish the means and methods for eliminating or controlling those hazards. A JHA shall be documented and made available upon request at the jobsite. At a minimum, the JHA shall include: the work task being performed; identified hazards; control methods for the identified hazards; the names of the Contractor and subcontractor(s); the DDC Project ID; the location and date; and the name and signature of the certifying individual. A JHA is a living document and must be re-evaluated and revised as necessary to address new or evolving hazards and tasks that may arise during the course of the project.

3.12 “Incident” means an unplanned project related event that results in personal injury requiring first aid or property damage.

3.13 “Multiemployer Site” means a Project Site where multiple Contractors and one or more subcontractors may be present, with subcontractors operating under the oversight of the respective Contractors.

3.14 “Near-Miss” means an unplanned project related event that does not result in an injury or damage but could have possibly led to an injury or damage.

3.15 “Office of Construction Safety (OCS)” means an office of DDC Safety and Site Support Division that assesses contractors’ safety compliance on DDC construction projects and advises responsible parties of needed corrective actions.

3.16 “Office of Environmental & HazMat Services (OEHS)” means an office of DDC Safety and Site Support Division that assesses contractors’ environmental compliance on DDC construction projects and advises responsible parties of needed corrective actions.

3.17 “Office of Quality Assurance (OQA)” means an office of DDC Safety and Site Support Division that assesses contractors’ quality and safety compliance on DDC construction projects and advises responsible parties of needed corrective actions.

3.18 “Project Site” means the area(s) upon or in which the construction work for the Project is performed, and such other areas adjacent thereto as may be designated by the Commissioner.

3.19 “Project Safety Representative” means an individual designated by the Contractor to oversee safety at the Project Site. A Project Safety Representative is required for all DDC construction projects and may perform other duties, provided that their primary focus remains on safety. The Project Safety Representative shall be present on-site during all construction work activities and shall be responsible for the proper planning and implementation of all applicable safety measures, continuous monitoring of safety performance during construction activities, conducting documented daily safety inspections, and ensuring timely execution of corrective actions to maintain a safe and compliant work environment. Multiple Project Safety Representatives may be required based on the scope and complexity of work. DDC reserves the right to require a full-time Project Safety Representative dedicated to safety compliance at any point during the project, for any reason, and the Contractor shall provide this representative at no additional cost to DDC. The Project Safety Representative shall, at a minimum, have successfully completed a 30-hour OSHA Construction Safety Course applicable to construction activities, and possess a Site Safety Training (SST) Supervisor Card where required. This individual shall have sufficient experience and expertise to identify health and safety hazards, apply appropriate controls, and hold the authority to initiate corrective actions.

3.20 “Project Safety Manager” means a dedicated, full-time safety professional required on construction projects as determined by the Commissioner or his/her duly authorized representative. The Project Safety Manager may be mandated by DDC at any time during the course of the project, for any reason, and shall be provided by the Contractor at no additional cost to DDC. The designated full-time Project Safety Manager shall be present on-site during all work activities and shall, at a minimum, possess the following qualifications: successful completion of an OSHA 30-hour Construction Safety certification; a valid Site Safety Training (SST) Supervisor Card where required; and one of the following professional credentials: Certified Safety Professional (CSP), Associate Safety Professional (ASP), or Certified Health and Safety Technician (CHST). The individual shall also have additional safety training and certifications relevant to the scope of work performed by the Contractor and/or subcontractor(s). The Project Safety Manager must have sufficient experience and expertise to identify and understand site-specific health and safety hazards and appropriate control measures and shall have the authority to enforce the implementation of corrective actions as necessary.

3.21 “Qualified Person” means, as defined by OSHA, an individual who by possession of a recognized degree, certificate, license, or professional standing, or who by extensive knowledge, training, and experience, has successfully demonstrated the ability to solve problems relating to the subject matter, the work, or the project. Qualified Persons are required under regulation to address issues pertaining, but without limit, to fall protection, scaffold design, maintenance and protection of traffic, and excavation protective system, among others.

3.22 “Registered Construction Superintendent (Construction Superintendent)” means an individual officially registered with the New York City Department of Buildings (DOB) and responsible for performing all duties outlined in Chapter 33 of Title 1 of the Rules of the City of New York. For applicable projects, as specified in Title 28 of the New York City Construction Codes, Contractors are required to assign one or more Construction Superintendents to ensure compliance with regulatory requirements and provide effective site safety oversight.

3.23 ”Safety Questionnaire” means a form used by DDC to assess a contractor’s current and historical safety performance. Completion of the Safety Questionnaire is mandatory for all Contractors, as part of the pre-award evaluation process.

3.24 “Site Safety Coordinator” means an individual designated by the Contractor for certain projects, as defined in Title 28 of the New York City Construction Codes. This individual must hold a valid Site Safety Coordinator License issued by the New York City Department of Buildings.

3.25 “Site Safety Manager” means an individual designated by the Contractor for specific projects, as defined in Title 28 of the New York City Construction Codes. This individual must hold a valid Site Safety Manager License issued by the New York City Department of Buildings.

3.26 “Site Safety Plan (SSP)” means a project-specific document that identifies all construction activities within the defined scope of work, evaluates associated hazards, and outlines appropriate safety procedures and training requirements necessary for the safe execution of tasks. The SSP shall include tailored safety measures based on the nature of the work and is subject to review and formal acceptance by the Office of Construction Safety (OCS) prior to the commencement of any on-site activities.

3.27 “Stop Work Order (SWO)” means to an action issued by DDC in response to either (a) a hazardous condition presenting imminent danger to life or property, where the Contractor is unable to take immediate corrective action, or (b) noncompliance with applicable federal, state, and city laws, regulations, and agency requirements. If such conditions are identified and immediate remediation is not feasible, the Office of Construction Safety (OCS), Office of Quality Assurance (OQA) or Environmental & HazMat Services (OEHS) has the authority to issue a full or partial SWO. The SWO mandates the suspension of all work associated with the identified hazard or noncompliance and will remain in effect until the Contractor submits satisfactory corrective measures, which are reviewed and approved by OCS, OQA, or OEHS, and fully implemented on-site.

3.28 “Site Safety Training (SST) Card” means a certification card issued by New York City Department of Buildings (DOB) under Local Law 196. The Law requires workers and supervisors at construction sites, that

designated a Construction Superintendent, Site Safety Manager, or Site Safety Coordinator, to complete safety training and obtain DOB approved SST cards.

3.29 "Subcontractor" means any person, firm, or corporation, other than employees of the Contractor, that enters into an agreement with the Contractor or with another subcontractor to furnish, or actually furnishes, labor; labor and materials; labor and equipment; or superintendence, supervision, and/or management services at the Project Site. Wherever the term "Subcontractor" appears, it shall also include sub-subcontractors.

3.30 "Unsafe or Unhealthy Condition" means A condition that poses a potential risk to the health and safety of personnel or the general public, and/or may result in harm to equipment, machinery, property, or the surrounding environment.

3.31 "Weekly Safety Meetings" means scheduled jobsite safety meetings conducted weekly by the Contractor for all on-site personnel. These meetings are intended to address general safety topics as well as project-specific requirements relevant to the DDC Project Site. Each meeting must be documented and include, at a minimum: the topics discussed, meeting content, name and signature of the individual conducting the meeting, names and signatures of attendees, Contractor's name, DDC Project ID, date, and location. Documentation shall be made available upon request.

3.32 "Work" means construction activities required under the Contractor's Contract Documents, whether completed or partially completed, and performed by the Contractor and/or subcontractor(s). Work encompasses the furnishing of labor, the supply and integration of materials and equipment into the construction process, and the provision of services necessary to fulfill the Contractor's obligation to complete the Project in accordance with the Contract Documents. "Work" may also include Utility Interference work, commonly referred to as "Section U," "EP-7," and "Joint Bid" work when performed in connection with the Contract.

4. RESPONSIBILITIES

4.1 All individuals who manage, perform, or provide support for construction projects shall conduct all operations in full compliance with the requirements set forth in these Safety Requirements, as well as all applicable laws, regulations, and guidelines issued by governing regulatory agencies pertaining to construction safety.

4.1.1 For Design-Build and CM-Build projects, the Design-Builder or CM-Builder assumes the dual roles of Contractor and CM and is responsible for both the execution and oversight of all construction activities.

4.1.2 DDC reserves the right to request the replacement of any personnel of the Contractor, CM, Design-Builder, or CM-Builder at any time during the project, for any reason, at no additional cost.

4.1.3 DDC reserves the right to require the Contractor to replace any personnel, whether directly or indirectly involved in the safety of construction activities, at any time and for any reason, at no additional cost to the City. This includes, but is not limited to: Project Safety Representative, Project Safety Manager, Competent Person, Site Safety Coordinators, Site Safety Managers, Construction Superintendent, tradespeople, and subcontractor personnel.

4.2 <u>Construction Manager (CM) Responsibilities</u>

4.2.1 <u>Site Safety Plan:</u> Review and approve Contractor's SSP, subcontractor safety plans, and activity specific safety procedures in accordance with the requirements set forth in Section 6, below, of this Contract Safety Requirements. Facilitate the initial submission and revisions of Contractor's SSP to OCS for review and acceptance.

4.2.2 <u>Construction Commencement Notification:</u> Notify OCS of the start of construction activities and provide a timely look-ahead schedule, as well as refer to Critical Activity Planning as set forth below.

4.2.3 Training Verification: Develop and implement a process to verify that all CM, Contractor, and subcontractor personnel are properly trained. Maintain records of initial and refresher training, ensuring documentation is available on-site upon request.

4.2.4 Safety Meetings Documentation: Attend and maintain records of Weekly Safety Meetings and Daily Safety Job Briefings.

4.2.5 Job Hazard Analysis (JHA): Ensure Contractor JHAs are current and accurately reflect the work being performed, associated hazards, and mitigation measures. Verify that all site personnel are trained on the JHAs and maintain supporting documentation on-site.

4.2.6 Critical Activity Planning: Ensure thorough planning for critical construction activities (e.g., crane operations, excavation, confined space entry), including coordination among Contractors, DDC, and any other relevant Agency.

4.2.7 Permit and Documentation: Maintain custody of all construction-related permits, plans, approvals, and drawings. Make sure that all permits are valid. Ensure these documents are readily available on-site.

4.2.8 Hazard Mitigation: Identify, minimize, or eliminate jobsite and public hazards through documented planning, inspections, verifications, and corrective actions process.

4.2.9 Site Condition Monitoring: Monitor Project Site conditions for compliance with the Contractor's SSP, DDC policies, permits, and applicable safety regulations.

4.2.10 Non-Compliance Notification and Remediation: Immediately notify the Contractor and DDC of any non-compliant conditions or activities, including violations of the SSPor applicable codes, or any situation posing risk to workers, the public, or property. Direct the Contractor to take corrective action, including providing necessary labor, materials, equipment, and supervision.

4.2.11 Accident, Incident and Near Miss Reporting: Notify OCS and the ACCO's Insurance and Risk Management Unit of any project-related Accidents, Incidents, or Near Misses within two (2) hours of occurrence, in accordance with DDC's Construction Safety Emergency and Accident Notification and Response Procedure.

4.2.12 Accident Site Integrity and Reporting: In the event of an Accident, Incident, or Near Miss, the CM shall ensure that the Contractor preserves the integrity of the Project Site. This includes safeguarding all physical evidence, documenting all personnel present at the time of the event, gathering relevant facts, and preparing the required DDC Construction Accident Report as per DDC's Construction Safety Emergency and Accident Notification and Response Procedure. The CM shall also ensure that the Contractor performs a thorough investigation, develops and implements corrective actions to prevent recurrence, and maintains all related records. Such records shall be made available upon request.

4.2.13 Regulatory Inspection Notification: Notify OCS within two (2) hours of the start of any inspection by external regulatory agencies (e.g., NYS, OSHA, NYC DOB). Submit a copy of the inspection report within one (1) business day of receipt.

4.2.14 Audit Support: Escort and assist OCS, OQA, and OEHS Auditors during all field and record audits.

4.2.15 Emergency Condition Reporting: Immediately report any emergency conditions to OCS by calling (718) 391-1911.

4.2.16 Qualified Personnel: Provide personnel who are appropriately certified and trained for the project. Maintain documentation of certifications and training and make it available upon request.

4.3 Contractors Responsibilities

4.3.1 Safety Questionnaire: Submit a completed Safety Questionnaire and all relevant safety performance documentation with the bid or as part of the pre-qualification package in accordance with the requirements set forth in Section 5, below, of this Contract Safety Requirements.

4.3.2 Site Safety Plan (SSP): Prepare and submit SSP, subcontractor safety plans and activity-specific safety procedures in accordance with the requirements set forth in Section 6, below, of this Contract Safety Requirements. The SSP must be revised and updated as necessary throughout the project and made available upon request.

4.3.3 Project Safety Representative and Project Safety Manager: Designate and identify a Project Safety Representative, and if applicable, a Project Safety Manager in the SSP. Notify OCS immediately of any permanent changes to these roles in a form and manner acceptable to OCS. If the designated individual is temporarily unavailable, an alternate must be provided. Provide resumes outlining qualifications and experience upon request by DDC. DDC reserves the right to request replacement of personnel at any time, at no additional cost.

4.3.4 Competent Person(s): Identify Competent Person(s) in the SSP. Multiple individuals may be required based on the scope and complexity of work. Competent Person(s) must be present during all work activities. DDC reserves the right to request replacements or additional personnel at any time.

4.3.5 NYC DOB Safety Roles: For applicable projects under NYC Construction Codes – Title 28, designate and identify a Licensed Site Safety Manager, Site Safety Coordinator, and/or Registered Construction Superintendent.

- Resumes shall be available upon request.
- Notify OCS of any permanent or temporary changes to these roles.
- Provide alternates as needed and inform OCS of all changes.
- DDC reserves the right to request replacements at any time, at no additional cost.
- JHA
- Develop a written JHA identifying safety hazards and control methods for project-specific tasks.
- Include a preliminary JHAs in the SSP.
- Update and revise the JHA as new tasks and hazards arise.
- Maintain copies on-site and produce upon request.

4.3.6 Subcontractor Safety Plans: Determine whether subcontractors will adhere to their own safety plans or the SSP developed by the Contractor. Review, approve, and submit to CM or DDC subcontractor's safety plans in accordance with the requirements outlined in Section 6 below.

4.3.7 Activity-Specific Safety Procedures: Develop and implement activity-specific safety procedures to safeguard workers, the public, and city-owned property and private-owned property throughout the duration of the project. If such procedures are prepared by subcontractors, the Contractor shall review and approve them prior to submission to the CM or DDC in accordance with the requirements set forth in Section 6 below.

4.3.8 Utility Safety Compliance: Follow all utility safety procedures when performing Utility Interference work (e.g., "Section U," "EP-7," "Joint Bid" work).

4.3.9 Employee Safety Awareness and Orientation: Conduct and document site-specific safety orientation for all Contractor and subcontractor personnel. Provide documentation to the CM and make it available upon request.

4.3.10 Training Requirements: Ensure that all Contractor and subcontractor employees are properly trained prior to mobilization and as needed throughout the duration of the project. At a minimum, all personnel must have completed the following training within the past five (5) calendar years:

- OSHA 10-hour Construction Safety Course
- Site Safety Training (SST) card with a minimum of 40 hours of training, as required for certain DDC projects
- Additional applicable training, including but not limited to: flagger, scaffold, fall protection, confined space entry, and excavation safety
- All training records must be submitted to the CM prior to mobilization, kept up to date throughout the project and made available for review upon request.

4.3.11 Safety Meetings and Briefings: Conduct and document weekly safety meetings and daily job briefings throughout the project. Attendance of all Contractor and subcontractor employees is mandatory. Maintain written records and make them available upon request and at the Project Site.

4.3.12 Documentation: Maintain and ensure immediate availability of all applicable and current safety documentation at the Project Site. This documentation can include, but is not limited to, the following:

- Task-specific JHAs
- Training records
- MPT Plan (if applicable
- Noise and Dust Mitigation Plans
- Excavation protective system drawings
- Emergency Evacuation Plan
- Fall Protection and Confined Space Programs
- Required permits
- Weekly Safety and daily job briefing records
- Crane operation documentation
- Daily inspection checklists
- Scaffold and sidewalk shed drawings
- Safety Data Sheets (SDS) for chemicals in use

4.3.13 Regulatory Compliance: Comply with all current applicable federal, state, and local safety and health laws, rules, and regulations, as amended or revised during the entire term of the project.

4.3.14 SSP Compliance: Adhere to all provisions outlined in the approved SSP.

4.3.15 Daily Safety Inspections: Conduct daily safety inspections, document findings, implement corrective actions, and maintain inspection records for review upon request.

4.3.16 Reporting Unsafe or Unhealthy Conditions: Report any unsafe or unhealthy conditions to the CM and/or DDC project staff as soon as practicable, but no later than twenty-four (24) hours after discovery. Prompt action shall be taken to remove or abate such conditions. If an imminent dangerous condition is discovered, the Contractor shall immediately stop all work in the affected area until corrective measures are implemented and accepted by the CM and/or DDC project staff and reviewed and accepted by OCS.

4.3.17 Reporting and Investigation of Accidents, Incidents, and Near Misses:

a) The Contractor shall report all Accidents, Incidents, and Near Misses involving injury to workers or the general public, as well as any property damage, to the CM and/or DDC project staff within one (1) hour of occurrence.

b) Following any Accident, Incident or Near Miss, and unless otherwise directed by the CM or OCS, the Contractor shall not remove or alter any equipment, structure, material, or evidence related to the Accident, Incident or Near Miss. **Exception:** Immediate emergency procedures may be taken to secure structures, temporary construction, operations, or equipment that pose a continued imminent danger, or to facilitate

assistance for individuals who are trapped or have sustained bodily injury. Additional measures shall be taken as necessary to secure the Project Site and prevent further injury or property damage.

c) The Contractor shall conduct a root cause investigation of the Accident, Incident, or Near Miss. Within twenty-four (24) hours of the event, the Contractor shall prepare and submit to the CM and/or DDC project staff a written investigation report detailing findings, corrective actions, and hazard mitigation measures to prevent recurrence. The report shall include, at a minimum:
    - Results of re-evaluation of the unsafe condition(s)
    - Determined root cause
    - A detailed description of step-by-step actions to implement hazard control methods
    - Responsibilities of involved personnel

4.3.18 Notification of Regulatory Inspections: Notify the CM and/or DDC project staff within one (1) hour of the commencement of any inspection conducted by outside regulatory agency personnel, including but not limited to OSHA, DOB, or any other relevant federal, state, or local authorities.

4.3.19 Multiemployer worksites: Ensure that Project Site conditions and existing and/or created safety and health hazards are communicate to or between all Contractor and subcontractor(s) employees prior to and during the course of the project. Exercise, every precaution to prevent injury to persons (including workers and members of the public) or damage to city-owned property or assets or any other property, as applicable.

4.3.20 The Contractor shall cooperate fully with DDC, including OCS, OQA and OEHS and the CM, and shall address all safety-related recommendations issued by DDC. Compliance with such recommendations shall in no way relieve the Contractor of its sole and continuing responsibility for safety on the project.

5. SAFETY QUESTIONNAIRE

5.1 DDC requires all Contractors to provide detailed information regarding their current and historical safety performance and programs. This requirement is fulfilled through the completion of the DDC Safety Questionnaire.

5.2 DDC reserves the right to request updates to the DDC Safety Questionnaire and/or to require additional, more detailed safety-related information at any time. Contractors must provide the requested documentation within ten (10) calendar days of the request.

5.3 As part of the bid or proposal submission package, Contractors shall submit a fully completed DDC Safety Questionnaire. The DDC Safety Questionnaire must include, among other required details, the company's Workers' Compensation Experience Modification Rating (EMR) and OSHA Incident Rates for the three (3) calendar years preceding the signature date of the Contractor's representative on the submitted Safety Questionnaire. DDC will evaluate the Contractor's safety performance over the three-year period using the following criteria:

5.3.1 Incident Rate for Lost Time Injuries; and

5.3.2 OSHA Form 300 "Log of Work-Related Injuries and Illnesses" and OSHA Form 300A "Summary of Work-Related Injuries and Illnesses" for the past three years for Contractors with more than ten (10) employees; and

5.3.3 Intrastate and Interstate Experience Modification Rate (EMR); and

5.3.4 Any willful violations issued by OSHA or DOB construction safety-related violations; and

5.3.5 History of OSHA serious violations; and

5.3.6 Any work-related fatality or injury, requiring OSHA notification; and

5.3.7 Past safety performance on DDC projects - work-related fatality or work-related injury requiring medical treatment beyond first aid, involving a Contractor's or subcontractor's employee(s), which occurred on a DDC Project.

5.4 OCS, through ACCO, may request additional information regarding the Contractor's safety performance. DDC may require the Contractor to submit documentation including, but not limited to, accident investigation reports, OSHA records, citations or violations, and written corrective action plans.

5.5 OCS is responsible for reviewing and evaluating the submitted Safety Questionnaire, along with any other relevant information based on the criteria outlined in this Section of the DDC Contract Safety Requirements. The evaluation results and recommendations will be provided by OCS to ACCO.

5.6 Upon receiving the Contractor's safety performance evaluation, ACCO will incorporate this information into the overall bid or proposal assessment. Based on the outcome of the safety performance review, DDC reserves the right to require the Contractor to develop and implement additional safety measures prior to and throughout the duration of construction activities.

6. SITE SAFETY PLAN

6.1 General: For all DDC construction projects, including Design-Build and CM-Build, the Contractor shall prepare and submit a comprehensive SSP.

6.1.1 The SSP must clearly outline the project's scope of work, planned construction activities, and any existing or potential health and safety hazards, along with procedures to eliminate or mitigate the identified hazards. The SSP must incorporate subcontractors' safety plans and any activity-specific safety procedures necessary to safely execute the work.

6.1.2 The SSP must be prepared and submitted through the SSP application available on the Contractor Access Portal (CAP). Relevant sections will become accessible to the Contractor upon selection of construction activities aligned with the project's scope of work. Each section will include a standardized template and outline the required supporting documentation, all of which must be completed prior to submission for CM and/or DDC review.

6.1.3 The SSP is a living document and must be continuously re-evaluated and updated by the Contractor as necessary to reflect changes in work scope, site conditions, hazards, tasks, equipment, means and methods, safety standards, or any other factors that may arise throughout the duration of the project. The most current version of the SSP, along with activity-specific safety procedures and subcontractor safety plans, shall be maintained on-site at all times and made available upon request.

6.1.4 The SSP is subject to review and acceptance by the OCS prior to the commencement of any Project Site work. Failure to submit an acceptable SSP will constitute grounds for default of the contract. The preparation, submission, review, and approval of the SSP shall follow the process outlined below.

6.2 SSP-Related Responsibilities: For Design-Build and CM-Build projects, the Design-Builder or CM-Builder assumes the dual roles of Contractor and CM and is responsible for reviewing and approving subcontractor safety plans and activity-specific safety procedures.

6.2.1 Construction Manager (CM): Responsible party may be CM/REI/PMCM, depending on project delivery method and contract type.

- Review and approve all safety documentation prior to the commencement of work by the Contractor or its subcontractor(s), in accordance with Sections 6.3.1.b and 6.3.2.b, below. Maintain safety-related records and ensure timely follow-up on required revisions

6.2.2 Contractor: Responsible party may be Contractor/Design-Builder/CM-Builder depending on project delivery method and contract type.

- Prepare and submit a comprehensive SSP for CM review and approval, if applicable, and for acceptance by DDC OCS
- Review and submit subcontractor safety plans for CM review and approval, if applicable
- Develop, review and submit activity-specific safety procedures, including those prepared by subcontractors, for CM review and approval
- Address feedback from DDC project staff, OCS and/or CM and revise documentation as needed throughout the construction phase
- Ensure that SSP is reviewed and approved by CM, and accepted by OCS prior to the commencement of construction work
- Ensure that subcontractor safety plans and activity-specific safety procedures are reviewed and approved by CM, unless otherwise directed by OCS, prior to the commencement of construction activities
- Train all applicable workers on the OCS-accepted SSP and CM-approved subcontractor safety plans and activity-specific safety procedures
- Ensure proper implementation of the OCS-accepted SSP and CM-approved subcontractor safety plans and activity-specific safety procedures

6.2.3 Subcontractors:

- Prepare and submit safety plans and activity-specific safety procedures to the Contractor for review and subsequent CM review and approval, if applicable.
- Address feedback and revise safety plans and activity-specific safety procedures accordingly
- Implement all approved safety plans and activity-specific safety procedures
- Participate in and provide required training

6.2.4 DDC Project Staff

- Review submitted SSP for completeness and alignment with the project scope and schedule

6.2.5 DDC Office of Construction Safety (OCS)

- Review the Contractor's SSP submitted via the designated process and determine its acceptability
- Verify CM's review and approval of subcontractor's safety plans and activity-specific safety procedures
- Conduct on-site audits to verify the implementation of the Contractor's SSP, subcontractor safety plans, and activity-specific safety procedures during active construction phases
- Issue full or partial Stop Work Orders in cases of non-compliance with the DDC Project Safety Plan Preparation, Review and Approval Policy, DDC Contract Safety Requirements and/or the presence of hazardous site conditions

6.3 SSP Submission and Review Procedures

6.3.1 Pre-Construction Phase: For in-house managed projects, Design-Build, CM-Build, or projects where the CM had not yet been onboarded at the time of the SSP submission, CM review and approval are not applicable. In such cases, the Contractor may bypass the CM review and approval step and submit the SSP directly to the DDC project staff, followed by submission to OCS.
Contractor SSP is subject to review and acceptance by OCS. The initial SSP submission during the pre-construction phase, as well as any re-submissions during construction phases, follows the process outlined below.

a. Initial Preparation and Submission: Contractor prepares the SSP utilizing the Site Safety Plan (SSP)

application available through the Contractor Access Portal and submits the SSP, including all available subcontractor safety plans and any available activity-specific procedures, to CM for review and approval, if applicable.

b. CM Review and Approval: Upon completion of the review, CM provides written comments or approval to Contractor. The review should confirm that the SSP meets, at a minimum, the following criteria:
   - Compliance with applicable federal, state, and local safety regulations
   - Coverage of known or anticipated hazards relevant to the project scope
   - Defined means and methods to eliminate or control existing or potential health and safety hazards
   - Completeness, clarity, and suitability for the scope of work

c. Submission to DDC: Contractor uploads the CM-approved SSP, along with the completed CM Review and Approval Logs (when applicable), to the SSP application via the Contractor Access Portal (CAP).

   - Design-Build and CM-Build projects: At least sixty (60) days prior to the commencement of construction work, or as otherwise directed.
   - Other project types: Within forty-five (45) days from the "Notice of Intent to Award" date, or as otherwise directed.

d. Project Staff Review: DDC Project Staff reviews the submitted SSP in the SSP application to ensure that all construction activities, schedule, and applicable templates are accurately represented.

e. OCS Review: OCS completes the review and assigns one of the following statuses:

   - Acceptable – Contractor may proceed with construction work

   - Conditionally Acceptable
     - Contractor may proceed with construction activities related to the portions of the SSP that have been deemed "Acceptable." However, for any sections marked "Conditionally Acceptable," additional documentation must be submitted prior to the start of work.
     - At least 30 calendar days before commencing construction activities associated with "Conditionally Acceptable" SSP sections, the Contractor must complete and upload the relevant templates, along with all required attachments, through the SSP application. These materials are required to be reviewed and accepted by OCS.
     - Failure to submit the required templates and attachments prior to beginning work on "Conditionally Acceptable" sections will result in the SSP status being changed to "Unacceptable" by OCS.

   - Unacceptable
     - Contractor is required to revise the SSP in accordance with comments provided by OCS, obtain CM re-approval if applicable, and resubmit the SSP through the SSP application for OCS review and acceptance.
     - Commencement of construction work without an SSP reviewed and accepted by OCS will result in a Stop Work Order issued by OCS.

6.3.2 Construction Phases: All subcontractor safety plans, and activity-specific safety procedures must be reviewed and approved by CM before the start of any construction work, by any subcontractor or sub-subcontractors.

   - In-house managed projects: Contractor submits subcontractor safety plans and activity-specific procedures directly to OCS for review and acceptance.
   - Design-Build and CM-Build projects: Subcontractor safety plans and activity-specific procedures are reviewed and approved by the Design-Builder or CM-Builder, unless otherwise directed by OCS.

a. Submission: Contractor submits to the CM, subcontractor safety plans and activity-specific safety procedures, including JHA forms, developed by Contractor and/or by subcontractor(s) and reviewed by the Contractor.

b. CM Review and Approval: CM evaluates submitted subcontractor safety plans and activity-specific safety procedures to ensure alignment, at minimum, with:

- Approved Contractor SSP
- Actual Project Site conditions
- Construction means and methods
- Applicable regulatory standards
- Written approval is issued once all criteria are satisfied

6.3.3 Revisions: Any of the following changes or impacting factors must prompt a reevaluation and update of the Contractor SSP, subcontractor safety plans and/or activity-specific safety procedures:

- Changes in work scope
- Modifications to Project Site conditions
- Alterations in construction means and methods
- Occurrence of Accidents, Incidents, or Near Misses
- Revisions to applicable safety standards or regulations
- Other factors that may affect site safety of the Project Site

All revised safety documentation is subject to CM review and approval, and, if directed, must submitted to OCS for further review and acceptance.

6.4 Training and Documentation

6.4.1 Training Requirements: Contractor ensures that all applicable personnel, including subcontractors, receive required safety training prior to the commencement of construction activities. This includes additional training requirements that must be satisfied before initiating any high-risk work. All safety training must be:

- Conducted in accordance with approved safety plans and procedures
- Federal, State and Local rules and regulations
- Properly documented, maintained on-site and readily accessible for review by project stakeholders and regulatory authorities upon request

6.4.2 Documentation: All documentation shall be maintained on-site and must be readily accessible for review by project stakeholders and regulatory authorities upon request. Contractor maintains the following safety-related documentation, including but not limited to:

- Contractor's SSP
- Subcontractor safety plans
- Activity-specific safety procedures, including JHA
- Training records for Contractor and subcontractor personnel, including applicable certifications, training cards, and licenses
- Applicable permits, drawings, equipment inspection records, and plans, such as MPT, Noise Mitigation, Dust Mitigation, etc.
- CM Review and Approval Logs for subcontractor safety plans and activity-specific safety procedures

6.4.3 CM Review and Approval Logs: Logs must include the name, title, and signature of the CM reviewer/approver, along with the date of approval for each subcontractor safety plan and activity-specific procedure.

6.5 Compliance

6.5.1 The DDC, through OCS, reserves the right to:

- Review all safety-related procedures, including the Contractor's SSP, subcontractor safety plans, and activity-specific safety procedures
- Verify adherence to the review and approval process outlined in this policy
- Enforce corrective action requirements where deficiencies or violations are identified

6.5.2 Failure by the Contractor to submit an acceptable or conditionally acceptable SSP, or to obtain CM approval for subcontractor safety plans and activity-specific safety procedures prior to commencing construction, may result in a full or partial Stop Work Order. Non-compliance with this policy may lead to project delays or suspension of ongoing construction activities until appropriate corrective actions are implemented.

6.5.3 If the DDC determines that either the Contractor or CM have not followed the required review and approval process, the Contractor must obtain formal acceptance from OCS before starting or resuming any construction activity that involves subcontractor safety plans or activity-specific safety procedures.

7. KICK-OFF/PRE-CONSTRUCTION MEETINGS

7.1 Prior to the commencement of construction activities on all DDC projects, the CM, if applicable, or designated DDC project staff shall invite representatives from DDC OCS, OQA, and OEHS to participate in the construction kick-off meeting.

7.2 Applicable representatives from each OCS, OQA, and OEHS will attend the meeting to review and discuss, but not be limited to, the following items:

- Contract Safety Requirements
- Project-specific conditions based on the project's scope of work, location, and other factors that may impact the safety of workers and the general public
- SSP and JHA requirements
- Accident/Incident reporting and investigation procedures
- Safety personnel roles and responsibilities
- Field audits and inspections by DDC**,** including construction safety, quality assurance, environmental compliance, and prevailing wage enforcement
- Other applicable requirements related to quality assurance, environmental protection, and hazardous materials (hazmat) management

8. SAFETY COMPLIANCE DURING WORK IN PROGRESS

8.1 General: The Contractor's compliance with DDC Safety Requirements, as well as applicable federal, state, and local regulations, will be monitored throughout the duration of the project. This evaluation will be conducted through the following procedures. Notwithstanding, always during the life of a construction project, nothing ever relieves the Contractor of the responsibility for following federal, state, or city (local) regulations, as amended or updated, or industry best practice.

8.2 Field Auditing: Various field audits will be performed using a standardized checklist by representatives from OCS, OQA, and OEHS, or other designated DDC personnel, along with the CM, if applicable. These audits will include both routine inspections and comprehensive site reviews. Findings will be shared with the Contractor, CM and/or DDC project staff to support the implementation of any required corrective actions.

8.3 Accidents, Incidents, and Near Misses: The Contractor shall notify the CM, if applicable, or DDC project staff within one hour of any Accidents, Incidents, or Near Misses. These events include, but are not limited to, fatalities, injuries to personnel or the public, and property damage. All such occurrences shall be investigated by the Contractor, and investigation reports, along with any additional documentation requested by OCS, must be submitted promptly to support review and follow-up actions.

8.4 Continuous Monitoring by the CM: The CM will conduct ongoing inspections of the Contractor's safety and environmental practices. Any deficiencies identified will be promptly reported to the Contractor's Project Safety Representative and, when applicable, to the on-site Project Safety Manager for immediate correction. The CM will maintain written documentation of all deficiencies, which will be made available upon request. Any critical deficiencies must be reported immediately to the Office of Construction Safety Unit at (718) 391-1911.

8.5 Performance Review Meetings: If the Contractor's safety performance does not meet DDC standards (e.g., poor safety metrics, accident/incident rates), OCS will arrange a performance review meeting with the Contractor's Project Safety Representative, the CM, and the DDC Environmental Specialist if environmental concerns are involved. The meeting will include:

- Assessment of the level of non-compliance
- Clarification of applicable safety and environmental requirements
- Development and implementation of a corrective action plan

8.6 Continued Non-Compliance: If deficiencies persist, DDC reserves the right to issue a Full Stop Work Order and follow the default provisions set forth in the contract documents.

8.7 Stop Work Orders: If imminent danger to life or property is identified, or if there is non-compliance with applicable laws, regulations, DDC Contract Safety Requirements or other agency standards and policies and immediate corrective action is not feasible, a Partial Stop Work Order (PSWO) or Full Stop Work Order (SWO) will be issued. The PSWO or SWO will remain in effect until corrective actions are completed and approved by OCS, OQA, and OEHS.

9. SAFETY PERFORMANCE EVALUATION

9.1 At the completion of designated construction phases and at project closeout, DDC's Office of Construction Safety shall conduct a formal evaluation of the Contractor's safety performance. This assessment shall be based on established criteria, including but not limited to Accident and Incident history, the number of Stop Work Orders issued, results of DDC safety audits, and compliance with Safety Site Plan (SSP) preparation, submission, review, and approval requirements.

9.2 The final safety performance rating shall be recorded in the City's PASSPort or any other system instituted by the City, and may be considered in future procurement decisions, in accordance with the City's Procurement Policy Board Rules and DDC's procurement solicitation.

NOTICE TO BIDDERS

Please be advised that the following Riders to the March 2017 New York City Standard Construction Contract have been attached and incorporated in this Invitation for Bid:

- Rider regarding Community Hiring for Construction Contracts;
- Rider regarding Non-Compensable Delays and Grounds for Extension;
- Rider regarding NYC Earned Safe and Sick Time Act;
- Rider regarding City Fleet and Truck Safety Requirements for City Contractors;
- Rider regarding Certified Payrolls

Other than provisions specifically delineated in the Riders, all other terms of the March 2017 New York City Standard Construction Contract continue to apply in full force and effect.

Community Hiring Rider

For Construction Contracts

Version: February 20, 2025

Program Description

Community Hiring, as authorized under Chapter 79 of the New York City Charter ("Charter"), is an initiative to set workforce goals on City procurement for contractors to employ low-income individuals and residents of economically disadvantaged communities.

The provisions set forth in this Rider shall apply to contracts with a total value exceeding three million dollars, unless otherwise exempt under the rules set forth under the Community Hiring Rules, adopted as Title 74 of the Rules of the City of New York (RCNY). Under 74 RCNY § 1-03(b), the following contracts are exempt: preferred source contracts; contracts for the performance of services by a city-affiliated not-for-profit corporation, goods contracts; contracts in an amount below the small purchase threshold; contracts for investigative or confidential services; contracts subject to federal or state funding requirements that preclude or substantially conflict with the application of Community Hiring Goals; contracts awarded through the United States General Services administration, or through the New York State Office of General Services; contracts for emergency demolition services procured by the Department of Housing Preservation and Development; contracts for which contractor selection is made by an elected official other than the Mayor or an agency other than a Mayoral Agency; contracts subject to 9 RCNY § 1-02(f); contracts designated for inclusion in a mentoring program as defined in Section 1206 or 1309 of the Charter; and contracts for banking services, electronic payment services, or other related services procured by the New York City Department of Finance.

The Community Hiring Rules are hereby incorporated in this Contract by reference and all terms used herein shall have the meanings given such terms in the Community Hiring Rules. In the event of any conflict between the Community Hiring Rules and this Rider, the rules shall control. As of the execution of this Contract, the Contactor represents that it has read, in its entirety, and agrees to comply with the Community Hiring Rules.

The Community Hiring program supersedes the HireNYC initiatives and the related riders, including, but not limited to references to the Public Assistance Commitment Rider and the HireNYC Hiring and Employment Rider. Article 35.6 of this Contract is amended and replaced with the Community Hiring Rules.

Community Hiring Requirements

The Contractor agrees to comply with the requirements of the Community Hiring Rules in the performance of this Contract.

A. Community Hiring Goal

Pursuant to 74 RCNY § 4-02(b), the Contractor shall make best efforts to meet the applicable Community Hiring Goal to employ Residence-Based Community Hires as defined in 74 RCNY § 2-01(a) for contracts involving construction work.

For each Contract involving Construction Work that is not subject to a Project Labor Agreement, the Contractor shall agree to make best efforts to meet the Community Hiring Goal of 30 percent of cumulative labor hours of construction work to be performed by Residence-Based Community Hires as established in 74 RCNY § 4-02(b)(1). For contracts involving Construction Work that are subject to a Project Labor Agreement, the Contractor shall agree to make best efforts to meet the numerical goal(s) regarding Residence-Based Community Hires and Apprentices established in such Project Labor Agreement.

In accordance with 74 RCNY § 5-01(b), the Contractor shall require its subcontractors, as defined under 74 RCNY § 1-02, to make best efforts to meet the applicable Community Hiring Goal.

B. Advertising Employment Opportunities

The Contractor, except those performing Construction Work pursuant to a Project Labor Agreement, agrees to advertise the Employment Opportunities, as defined in 74 RCNY § 1-02, in conspicuous places available to the public and in a manner reasonable for the industry.

For purposes of meeting a Community Hiring Goal, the Contractor shall notify a Referral Source, as provided in accordance with 74 RCNY § 3-02(a), of the job opportunities to be filled by Community Hires. The Contractor shall provide notice to the Office of Community Hiring and Workforce Development (OCH) when the Referral Source has impeded the Contractor's efforts to meet the Community Hiring Goal.

C. System Enrollment and Reporting

The Contractor shall enroll with an electronic system designated by the Director of OCH in accordance with 74 RCNY § 5-01(e).

Once enrolled into the system, the Contractor shall be responsible for updating the information in the system in a reasonable and timely manner.

The Contractor may fulfill the advertising requirement set forth in 74 RCNY § 5-01(c) by posting in such system all the relevant information of an Employment Opportunity to be filled by Community Hires. The Contractor shall also provide, upon request by the City with reasonable notice, any information related to the Contractor's compliance with or progress towards meeting the Community Hiring Goal.

Records

A. Retention

The Contractor shall maintain records in accordance with the applicable requirements set forth in 74 RCNY §§ 6-01 and 6-02.

For purposes of 74 RCNY § 6-01(b), the Contractor shall designate a representative to monitor all activity related to compliance to ensure that the Contractor is exercising best efforts to meet the Community Hiring Goal and maintain records to submit the documentation relating to the provisions herein.

B. Access to Records

The Contractor shall furnish, and require its subcontractors to furnish, all information and reports in accordance with the laws, rules, regulations or guidance from the City.

Compliance

Without limitation to any other provisions under this Contract and any other remedies available to the City, a failure to comply with the requirements under the Community Hiring Rules is a non-compliance that may be subject to civil penalties pursuant to Chapter 7 of the Community Hiring Rules and may be considered as a factor in evaluating contract performance in accordance with 9 RCNY § 4-01.

A. Best Efforts

Where the Contractor has failed to meet the Community Hiring Goal, the Contractor shall demonstrate that it exercised best efforts to meet the goal. Where determined, as set forth in 74 RCNY § 5-03, that the Contractor failed to make best efforts, the City shall send written notice to the Contractor's designated representative, notwithstanding the notice provisions in the Contract. The Contractor shall respond in accordance with the instructions in the notice. Failure to timely respond can result in a non-compliance determination subject to civil penalties as set forth in 74 RCNY § 7-01.

B. Corrective Action

Where the City determines that the non-compliance may be remedied through a corrective action and provides notice to the Contractor pursuant to 74 RCNY § 7-02(a)(2), the Contractor shall respond in accordance with the requirements outlined in the notice. The Contractor is responsible for timely demonstration of taking the requisite corrective action. Demonstration of corrective action to the satisfaction of the Director of OCH, may result in waiving of the civil penalties[1] as set forth in the Community Hiring Rules.

[1] Only civil penalties relating to non-compliance with the Community Hiring Rules can be waived in this instance.

C. Civil Penalties

Where Contractor is found non-compliant subject to civil penalties, the City can impose a civil penalty amount in accordance with the schedule set forth in 74 RCNY § 7-03.

The City may withhold from the Contractor the amount of the civil penalties upon final determination as set forth in 74 RCNY § 7-01(d).

RIDER TO NEW YORK CITY STANDARD CONSTRUCTION CONTRACT (MARCH 2017) REGARDING NON-COMPENSABLE DELAYS AND GROUNDS FOR EXTENSION

The following provisions supersede the corresponding provisions in the March 2017 version of the New York City Standard Construction Contract:

1. Section **11.5.1** provides as follows:

   11.5.1 The acts or omissions of public or government bodies (other than **City** agencies) or of any third parties who are disclosed in the **Contract Documents,** or those third parties who are ordinarily encountered or who are generally recognized as related to the **Work**, including but not limited to, **Other Contractors**, utilities or private enterprises;

2. Section **11.5.6** provides as follows:

   11.5.6 Climatic conditions, storms, floods, droughts, tidal waves, fires, hurricanes, earthquakes, landslides or other catastrophes or acts of God; acts of war or of the public enemy or terrorist acts; disruption, outage or power failure caused by a utility's inability or failure to provide service, pandemics, epidemics, outbreaks of infectious disease or any other public health emergency; other states of emergency declared by the City, State or Federal government , quarantine restrictions, and freight embargoes; including the **City's** reasonable responses to any of the above; and

3. Section **13.3** provides as follows:

   13.3 Grounds for Extension: If such application is made, the **Contractor** shall be entitled to an extension of time for delay in completion of the **Work** caused solely:

   13.3.1 By any of the acts or omissions of the **City**, its officials, agents or employees set forth in Articles **11.4.1.1** through **11.4.1.9**; or

   13.3.2 By or attributable to any of the items set forth in Articles **11.5.1** through **11.5.7**.

   13.3.3 The **Contractor** shall, however, be entitled to an extension of time for such causes only for the number of **Days** of delay which the **ACCO** or the Board may determine to be due solely to such causes, and then only if the **Contractor** shall have strictly complied with all of the requirements of Articles 9 and 10.

NYC EARNED SAFE AND SICK TIME ACT CONTRACT RIDER

(To supersede Section 4.06 of the January 2018 Appendix A and Section 35.5 of the March 2017 Standard Construction Contract and to be attached to other City contracts and solicitations)

A. *Introduction and General Provisions.*

1. The Earned Safe and Sick Time Act ("ESSTA"), codified at Title 20, Chapter 8 of the New York City Administrative Code, also known as the "Paid Safe and Sick Leave Law," requires covered employees (as defined in Admin. Code § 20-912) in New York City ("City") to be provided with paid safe and sick time. Contractors of the City or of other governmental entities may be required to provide safe and sick time pursuant to the ESSTA. The ESSTA is enforced by the City's Department of Consumer and Worker Protection ("DCWP"), which has promulgated 6 RCNY §§ 7-101 and 201 *et seq*. ("DCWP Rules").

2. The Contractor agrees to comply in all respects with the ESSTA and the DCWP Rules, and as amended, if applicable, in the performance of this agreement. The Contractor further acknowledges that such compliance is a material term of this agreement and that failure to comply with the ESSTA in performance of this agreement may result in its termination.

3. The Contractor must notify (with a copy to DCWP at ComplianceMonitoring@dcwp.nyc.gov) the Agency Chief Contracting Officer of the City Agency or other entity with whom it is contracting in writing within 10 days of receipt of a complaint (whether oral or written) or notice of investigation regarding the ESSTA involving the performance of this agreement. Additionally, the Contractor must cooperate with DCWP's guidance and must comply with DCWP's subpoenas, requests for information, and other document demands as set forth in the ESSTA and the DCWP Rules. More information is available at https://www1.nyc.gov/site/dca/about/paid-sick-leave-what-employers-need-to-know.page.

4. Upon conclusion of a DCWP investigation, Contractor will receive a findings letter detailing any employee relief and civil penalties owed. Pursuant to the findings, Contractor will have the opportunity to settle any violations and cure the breach of this agreement caused by failure to comply with the ESSTA either i) without a trial by entering into a consent order or ii) appearing before an impartial judge at the City's administrative tribunal. In addition to and notwithstanding any other rights and remedies available to the City, non-payment of relief and penalties owed pursuant to a consent order or final adjudication within 30 days of such consent order or final adjudication may result in the termination of this agreement without further opportunity to settle or cure the violations.

5. The ESSTA is briefly summarized below for the convenience of the Contractor. The Contractor is advised to review the ESSTA and the DCWP Rules in their entirety. The Contractor may go to www.nyc.gov/PaidSickLeave for resources for employers, such as Frequently Asked Questions, timekeeping tools and model forms, and an event calendar of upcoming presentations and webinars at which the Contractor can get more information about how to comply with the ESSTA and the DCWP Rules. The Contractor acknowledges that it is responsible for compliance with the ESSTA and the DCWP Rules notwithstanding any inconsistent language contained herein.

B. *Pursuant to the ESSTA and DCWP Rules: Applicability, Accrual, and Use.*

1. An employee who works within the City must be provided paid safe and sick time.[1] Employers with one hundred or more employees are required to provide 56 hours of safe and sick time for an employee each calendar year. Employers with fewer than one hundred employees are required to provide 40 hours of sick leave each calendar year. Employers must provide a minimum of one hour of safe and sick time for every 30 hours worked by an employee and compensation for such safe and sick time must be provided at the greater of the employee's regular hourly rate or the minimum wage at the time the paid safe or sick time is taken. Employers are not discouraged or prohibited from providing more generous safe and sick time policies than what the ESSTA requires.

2. Employees have the right to determine how much safe and sick time they will use, provided that an employer may set a reasonable minimum increment for the use of safe and sick time not to exceed four hours per day. For the use of safe time or sick time beyond the set minimum increment, an employer may set fixed periods of up to thirty minutes beyond the minimum increment. In addition, an employee may carry over up to 40 or 56 hours of unused safe and sick time to the following calendar year, provided that no employer is required to carry over unused paid safe and sick time if the employee is paid for such unused safe and sick time and the employer provides the employee with at least the legally required amount of paid safe and sick time for such employee for the immediately subsequent calendar year on the first day of such calendar year.

3. An employee entitled to safe and sick time pursuant to the ESSTA may use safe and sick time for any of the following:

a. such employee's mental illness, physical illness, injury, or health condition or the care of such illness, injury, or condition or such employee's need for medical diagnosis or preventive medical care;

b. such employee's care of a family member (an employee's child, spouse, domestic partner, parent, sibling, grandchild, or grandparent, the child or parent of an employee's spouse or domestic partner, any other individual related by blood to the employee, and any other individual whose close association with the employee is the equivalent of a family relationship) who has a mental illness, physical illness, injury or health condition or who has a need for medical diagnosis or preventive medical care;

---

[1] Pursuant to the ESSTA, if fewer than five employees work for the same employer, and the employer had a net income of less than one million dollars during the previous tax year, such employer has the option of providing such employees uncompensated safe and sick time.

c. closure of such employee's place of business by order of a public official due to a public health emergency;

d. such employee's need to care for a child whose school or childcare provider has been closed due to a public health emergency; or

e. when the employee or a family member has been the victim of a family offense matter, sexual offense, stalking, or human trafficking:

1. to obtain services from a domestic violence shelter, rape crisis center, or other shelter or services program for relief from a family offense matter, sexual offense, stalking, or human trafficking;
2. to participate in safety planning, temporarily or permanently relocate, or take other actions to increase the safety of the employee or employee's family members from future family offense matters, sexual offenses, stalking, or human trafficking;
3. to meet with a civil attorney or other social service provider to obtain information and advice on, and prepare for or participate in any criminal or civil proceeding, including but not limited to, matters related to a family offense matter, sexual offense, stalking, human trafficking, custody, visitation, matrimonial issues, orders of protection, immigration, housing, discrimination in employment, housing or consumer credit;
4. to file a complaint or domestic incident report with law enforcement;
5. to meet with a district attorney's office;
6. to enroll children in a new school; or
7. to take other actions necessary to maintain, improve, or restore the physical, psychological, or economic, health or safety of the employee or the employee's family member or to protect those who associate or work with the employee.

4. An employer must not require an employee, as a condition of taking safe and sick time, to search for a replacement. However, where the employee's need for safe and sick time is foreseeable, an employer may require an employee to provide reasonable notice of the need to use safe and sick time. For an absence of more than three consecutive work days, an employer may require reasonable documentation that the use of safe and sick time was needed for a reason listed in Admin. Code § 20-914; and/or written confirmation that an employee used safe and sick time pursuant to the ESSTA. However, an employer may not require documentation specifying the nature of a medical condition, require disclosure of the details of a medical condition, or require disclosure of the details of a family offense matter, sexual offense, stalking, or human trafficking, as a condition of providing safe and sick time. Health information and information concerning family offenses, sexual offenses, stalking or human trafficking obtained solely due to an

employee's use of safe and sick time pursuant to the ESSTA must be treated by the employer as confidential. An employer must reimburse an employee for all reasonable costs or expenses incurred in obtaining such documentation for the employer.

5. An employer must provide to all employees a written policy explaining its method of calculating sick time, policies regarding the use of safe and sick time (including any permissible discretionary conditions on use), and policies regarding carry-over of unused time at the end of the year, among other topics. It must provide the policy to employees using a delivery method that reasonably ensures that employees receive the policy. If such employer has not provided its written policy, it may not deny safe and sick time to an employee because of non-compliance with such a policy.

6. An employer must provide a pay statement or other form of written documentation that informs the employee of the amount of safe/sick time accrued and used during the relevant pay period and the total balance of the employee's accrued safe/sick time available for use.

7. Safe and sick time to which an employee is entitled must be paid no later than the payday for the next regular payroll period beginning after the safe and sick time was used.

C. *Exemptions and Exceptions*. Notwithstanding the above, the ESSTA does not apply to any of the following:

1. an independent contractor who does not meet the definition of employee under N.Y. Labor Law § 190(2);

2. an employee covered by a valid collective bargaining agreement, if the provisions of the ESSTA are expressly waived in such agreement and such agreement provides a benefit comparable to that provided by the ESSTA for such employee;

3. an audiologist, occupational therapist, physical therapist, or speech language pathologist who is licensed by the New York State Department of Education and who calls in for work assignments at will, determines their own schedule, has the ability to reject or accept any assignment referred to them, and is paid an average hourly wage that is at least four times the federal minimum wage;

4. an employee in a work study program under Section 2753 of Chapter 42 of the United States Code;

5. an employee whose work is compensated by a qualified scholarship program as that term is defined in the Internal Revenue Code, Section 117 of Chapter 20 of the United States Code; or

6. a participant in a Work Experience Program (WEP) under N.Y. Social Services Law § 336-c.

D. *Retaliation Prohibited.* An employer shall not take any adverse action against an employee that penalizes the employee for, or is reasonably likely to deter the employee from or interfere with the employee exercising or attempting in good faith to exercise any right provided by the ESSTA. In addition, an employer shall not interfere with any investigation, proceeding, or hearing pursuant to the ESSTA.

E. *Notice of Rights.*

1. An employer must provide its employees with written notice of their rights pursuant to the ESSTA. Such notice must be in English and the primary language spoken by an employee, provided that DCWP has made available a translation into such language. Downloadable notices are available on DCWP's website at https://www1.nyc.gov/site/dca/about/Paid-Safe-Sick-Leave-Notice-of-Employee-Rights.page. The notice must be provided to the employees by a method that reasonably ensures personal receipt by the employee.

2. Any person or entity that willfully violates these notice requirements is subject to a civil penalty in an amount not to exceed $50.00 for each employee who was not given appropriate notice.

F. *Records*. An employer must retain records documenting its compliance with the ESSTA for a period of at least three years, and must allow DCWP to access such records in furtherance of an investigation related to an alleged violation of the ESSTA.

G. *Enforcement and Penalties.*

1. Upon receiving a complaint alleging a violation of the ESSTA, DCWP must investigate such complaint. DCWP may also open an investigation to determine compliance with the ESSTA on its own initiative. Upon notification of a complaint or an investigation by DCWP, the employer must provide DCWP with a written response and any such other information as DCWP may request. If DCWP believes that a violation of the ESSTA has occurred, it has the right to issue a notice of violation to the employer .

2. DCWP has the power to grant an employee or former employee all appropriate relief as set forth in Admin. Code § 20-924(d). Such relief may include, but is not limited to, treble damages for the wages that should have been paid; statutory damages for unlawful retaliation; and damages, including statutory damages, full compensation for wages and benefits lost, and reinstatement, for unlawful discharge. In addition, DCWP may impose on an employer found to have violated the ESSTA civil penalties not to exceed $500.00 for a first violation, $750.00 for a second violation within two years of the first violation, and $1,000.00 for each succeeding violation within two years of the previous violation. When an employer has a policy or practice of not providing or refusing to allow the use of safe and sick time to its employees, DCWP may seek penalties and relief on a per employee basis.

3. Pursuant to Admin. Code § 20-924.2, (a) where reasonable cause exists to believe that an employer is engaged in a pattern or practice of violations of the ESSTA, the Corporation Counsel may commence a civil action on behalf of the City in a court of competent jurisdiction by filing a complaint setting forth facts relating to such pattern or practice and requesting relief, which may include injunctive relief, civil penalties and any other appropriate relief. Nothing in § 20-924.2 prohibits DCWP from exercising its authority under section 20-924 or the Charter, provided that a civil action pursuant to § 20-924.2 shall not have previously been commenced.

H. *More Generous Polices and Other Legal Requirements.* Nothing in the ESSTA is intended to discourage, prohibit, diminish, or impair the adoption or retention of a more generous safe and sick time policy, or the obligation of an employer to comply with any contract, collective bargaining agreement, employment benefit plan or other agreement providing more generous safe and sick time. The ESSTA provides minimum requirements pertaining to safe and sick time and does not preempt, limit, or otherwise affect the applicability of any other law, regulation, rule, requirement, policy or standard that provides for greater accrual or use by employees of safe and sick leave or time, whether paid or unpaid, or that extends other protections to employees. The ESSTA may not be construed as creating or imposing any requirement in conflict with any federal or state law, rule or regulation.

New York City Mayoral Executive Order No. 39 Rider

City Fleet and Truck Safety Requirements for City Contractors

Version: 11/19/24

Section 1.01 Background

This rider is included in the Agreement and made a part thereof pursuant to the provisions of Mayoral Executive Order 39 of 2024.

Section 1.02 Definitions

A. Capitalized terms not otherwise defined in this rider shall have the meaning ascribed to them in the Agreement.

B. Agreement: The agreement between the City and the Contractor, to which this rider has been added and made a part.

C. City-contracted Vehicle means a Truck (as hereinafter defined) or any other motor vehicle that the Contractor anticipates providing in accordance with this Agreement or using in performing its obligations under this Agreement on a weekly or more frequent basis[1]. This includes those vehicles anticipated to be provided or used by subcontractors to fulfill the scope of a subcontract for work to be performed under a contract that is subject to the Executive Order, regardless of monetary value of the subcontract, if the vehicle is utilized on a weekly or more frequent basis.

D. Contracting Agency: the City agency or office through which the City of New York has entered into this Agreement.

[1] The following vehicles are not considered City-contracted vehicles and are thus not subject to Executive Order 39: any motor vehicle or truck that is utilized pursuant to (1) contracts registered prior to July 1, 2024, including the renewal, extension, or modification of such contracts; (2) an agency on-call emergency contract; (3) an emergency procurement made pursuant to section 3-06 of title 9 of the Rules of the City of New York or pursuant to an executive order of the Mayor or Governor issued under section 24 or section 29-A of the New York State Executive Law; (4) intergovernmental contracts; (5) government-to-government contracts between the City and any State or Federal government agency; and (6) a contract for utilities, as identified in subdivision (b) of section 825 of the New York City Charter.

E. Contractor: the entity providing services under this Agreement.

F. Executive Order: Mayoral Executive Order 39 of 2024, as it may be amended.

G. High Vision Truck: A Truck with a cab-over or cab-forward design wherein the driver sits in front of the front axle as opposed to conventional cab design wherein the engine and front axle are in front of the driver. The distance from the forward of the center of the vehicle bumper at which the driver can see the top of a 3-foot cone shall not exceed eight feet and the distance beyond the exterior of the passenger side door at which the driver can first see the top of the 4-foot cone shall not exceed six feet.

H. Registration: Registration of this Agreement pursuant to Section 328 of the New York City Charter.

I. Telematics: Automatic vehicle location systems that track vehicle location and speed and alert the driver and another designated person(s) to such location and speed in real time.

J. Truck: A City-contracted Vehicle with a manufacturer's gross vehicle weight rating exceeding 10,000 pounds. The term does not include off-road construction vehicles.

K. Truck Surround Cameras: A system of cameras, sensors, and alerts placed on a Truck that provides a Truck operator with a full view of all four sides of the Truck.

L. Vehicle Safety Plan: A plan with regard to City-contracted Vehicles, approved by the Contracting Agency, that includes the components listed in Section 2.03(A) through (F) of this rider.

Section 2.01 Vehicle Requirements

All City-contracted Vehicles shall conform to the following requirements:

A. Truck Surround Cameras: All Trucks, other than High Vision Trucks, shall be outfitted with truck surround cameras in accordance with the following schedule:
   a. Contracts involving 10 or fewer Trucks: No later than 12 months from Registration.
   b. Contracts involving more than 10 Trucks: No later than 18 months from Registration.
   c. New or replacement Truck acquired after work under this Agreement has begun: Truck must be outfitted with Truck Surround Cameras within 12 months from the date of first using such Truck.
   d. Contractor must submit to the Contracting Agency photographic and purchase order evidence, that is satisfactory to the Contracting Agency, of compliance with this Paragraph (A).

B. Truck Side-guards: Contractor shall provide side-guards for City-contracted Vehicles as applicable pursuant to Section 6-141 of the New York City Administrative Code.

C. Telematics: All City-contracted Vehicles must be installed with Telematics. Data gathered by Telematics must be made available in a manner that is satisfactory to the Contracting Agency.

Section 2.02 Safety Requirements

Contractor shall provide the following:

A. Licensing: Contractors shall ensure proper licensing for all drivers who operate City-contracted Vehicles. Contractors shall ensure that all drivers operating City-contracted Vehicles are enrolled in the New York State License Notification System (LENS) and that all out-of-state licenses are being monitored by Contractor. Contractor must notify the Contracting Agency of any license suspensions and/or arrests tied to unsafe or illegal vehicle operation by any drivers of City-contracted Vehicles.

B. Training: Contractor must provide the Contracting Agency documentation, satisfactory to the Contracting Agency, showing:
    a. That all drivers of City-contracted Vehicles have taken a New York State approved defensive driving class within six months after Registration; or
    b. That all drivers of City-contracted Vehicles have attended a New York State-approved defensive driving class within 3 years prior to Registration; or
    c. That all drivers of City-contracted Vehicles have received alternative safe driver training acceptable to the Contracting Agency that is documented to the satisfaction of the Contracting agency.

C. Crash tracking: Contractors must notify the Contracting Agency of any and all collisions that take place involving City-contracted Vehicles while performing services under this Agreement.

Section 2.03 Vehicle Safety Plan

Within one month after Registration, the Contractor must submit, for review and approval, to Contracting Agency, at the address set forth in the Agreement for notices to the City, and DCAS Fleet (C/O Chief Fleet Management Officer, 23rd Floor South, Municipal Building, 1 Centre Street, NY, NY 10007) a proposed vehicle safety plan that shall include at the minimum the components listed in Paragraphs (A) through (E) below. If directed by the Contracting Agency,

Contractor shall revise said proposed vehicle safety plan in accordance with the directions of the Contracting Agency, and until the Contracting Agency issues its approval thereof, Contractor shall submit a revised proposed vehicle safety plan to the Contracting Agency in each case, within 15 days after receipt by Contractor of directions to that effect from the Contracting Agency. Upon approval of the proposed vehicle safety plan, said proposed plan shall be considered the Vehicle Safety Plan and Contractor shall comply with the terms thereof. Each second anniversary of the approval of the Vehicle Safety Plan the Contractor shall submit an update thereof. The Vehicle Safety Plan shall include at the minimum the following components:

A. Vehicle List: List of City-contracted Vehicles, including the year, make, model, VIN and license plate number of each City-contracted Vehicle;

B. Safety Training: Documentation showing that all drivers of City-contracted Vehicles have completed the training detailed in section 2.02(B) of this Rider;

C. Technology: A list of all relevant technology investments installed on City-contracted vehicles, including but not limited to the technology listed in section 2.01 of this Rider;

D. Crash Tracking: An explanation of Contractor's process of monitoring and reviewing collisions including plans to notify Contracting Agency of collisions that take place while performing services under this Agreement;

E. Corrective Action: A corrective action program for drivers of City-contracted Vehicles that engage in unsafe or dangerous driving behaviors and license monitoring; and

F. Additional Safety Measures: Contractor must indicate if there are any additional safety technologies, safety practices, training, or other procedures that are utilized for City-contracted Vehicles during the term of this Agreement.

Section 3.01 Liquidated Damages

A. Contractor acknowledges that its failure to comply with the provisions of this Vehicle Safety Plan will cause loss and damage to the City, the precise extent of which is difficult to ascertain in monetary terms. For this reason, the parties desire to provide fair and reasonable compensation to the City for such losses, which compensation shall not be construed as a penalty. It is therefore agreed that, in addition to any other liquidated damages that the Contractor shall be required to pay to the City in accordance with the provisions of the Agreement, Contractor shall pay to the City the following:
    a. The sum of $500.00 for each instance of a failure by the Contractor to submit a Vehicle Safety Plan in accordance with the provisions of Section 2.03.

b. The sum of $500.00 for each instance of a failure by the Contractor to comply with the provisions of Section 2.02(A) [Licensing].
c. The sum of $500.00 for each instance of a failure by the Contractor to comply with the provisions of Section 2.02(B) [Training].
d. The sum of $500.00 for each instance of a failure by the Contractor to comply with the provisions of Section 2.02(C) [Crash Tracking].
e. The sum of $500.00 for each instance of a failure by the Contractor to comply with the provisions of Section 2.01(C) [Telematics].
f. The sum of $3,000 for each instance of a failure by the Contractor to comply with the provisions of Section 2.01(A).
g. The Contracting Agency will provide at least 5 working days of notice to the Contractor and opportunity to rectify before implementing these liquidated damages.

B. Liquidated damages received pursuant to this Agreement are not intended to be nor shall they be treated as either a partial or full waiver or discharge of the City's right to indemnification, or the Contractor's obligation to indemnify the City, or to any other remedy provided for in this Agreement or by Law. The City may deduct and retain out of the monies which may become due under this Agreement, the amount of any such liquidated damages; and in case the amount which may become due hereunder shall be less than the amount of liquidated damages suffered by the City, the Contractor shall be liable to pay the difference.

RIDER TO NEW YORK CITY STANDARD CONSTRUCTION CONTRACT (MARCH 2017) REGARDING CERTIFIED PAYROLLS

The following provisions supersede the corresponding provisions in the March 2017 version of the New York City Standard Construction Contract. Article 38 provides as follows:

ARTICLE 38. PAYROLL REPORTS

38.1 The **Contractor** and its **Subcontractor(s)** shall maintain the original payrolls or transcripts thereof which the **Contractor** and its **Subcontractor(s)** are required to maintain and shall submit such original payrolls or transcripts, subscribed and affirmed by it as true, within thirty (30) **Days** after issuance of its first payroll, and every thirty (30) **Days** thereafter, pursuant to Labor Law Section 220(3-a)(a)(iii), as modified by Labor Law Section 220-j. The **Contractor** and **Subcontractor(s)** shall submit such original payrolls or transcripts into the Electronic Certified Payroll Database (as hereinafter defined). If payment requisitions are not submitted at least once a month, the **Contractor** and its **Subcontractor(s)** shall submit original payrolls and transcripts both at the same time payment requisitions are submitted and independently of its payment requisitions. For purposes of this Article 38, "Electronic Certified Payroll Record Database" means the City's publicly accessible online database of electronic certified payroll records through which contractors and subcontractors submit certified payroll reports in an electronic format. The database is accessible at the following link: https://nyc-oti.ecomply.us/

38.2 The **Contractor** shall maintain payrolls or transcripts thereof for six (6) years from the date of completion of the **Work** on this **Contract**. If such payrolls and transcripts are maintained outside of New York City after the completion of the **Work** and their production is required pursuant to this Article 38, the **Contractor** shall produce such records in New York City upon request by the City.

38.3 The **Contractor** and **Subcontractor(s)** shall comply with any written order, direction, or request made by the **Engineer**, the **Commissioner**, the **ACCO**, the **Agency EAO**, the **Agency Labor Law Investigator(s)**, or the **Comptroller**, to provide to the requesting party any of the following information and/or records within five (5) **Days** of such written order, direction, or request:

38.3.1 Such original payrolls or transcripts thereof subscribed and affirmed by it as true and the statements signed by each worker pursuant to this Chapter VIII; and/or

38.3.2 Attendance sheets for each **Day** on which any employee of the **Contractor** and/or any of the **Subcontractor(s)** performed **Work** on the **Site**, which attendance sheet shall be in a form acceptable to the **Agency** and shall provide information acceptable to the **Agency** to identify each such employee; and/or

38.3.3 Any other information to satisfy the **Engineer**, the **Commissioner**, the **ACCO**, the **Agency EAO**, the **Agency Labor Law Investigator(s)** or the **Comptroller**, that this Chapter VIII and the Labor Law, as to the hours of employment and prevailing rates of wages and/or supplemental benefits, are being observed.

CITY OF NEW YORK

STANDARD CONSTRUCTION CONTRACT

March 2017

(NO TEXT ON THIS PAGE)

CITY OF NEW YORK STANDARD CONSTRUCTION CONTRACT

TABLE OF CONTENTS

(NO TEXT ON THIS PAGE) 6
CHAPTER I: THE CONTRACT AND DEFINITIONS 7
ARTICLE 1. THE CONTRACT 7
ARTICLE 2. DEFINITIONS 7
CHAPTER II: THE WORK AND ITS PERFORMANCE 10
ARTICLE 3. CHARACTER OF THE WORK 10
ARTICLE 4. MEANS AND METHODS OF CONSTRUCTION 10
ARTICLE 5. COMPLIANCE WITH LAWS 11
ARTICLE 6. INSPECTION 16
ARTICLE 7. PROTECTION OF WORK AND OF PERSONS AND PROPERTY; NOTICESAND INDEMNIFICATION 17
CHAPTER III: TIME PROVISIONS 18
ARTICLE 8. COMMENCEMENT AND PROSECUTION OF THE WORK 18
ARTICLE 9. PROGRESS SCHEDULES 18
ARTICLE 10. REQUESTS FOR INFORMATION OR APPROVAL 19
ARTICLE 11. NOTICE OF CONDITIONS CAUSING DELAY AND DOCUMENTATION OF DAMAGES CAUSED BY DELAY 19
ARTICLE 12. COORDINATION WITH OTHER CONTRACTORS 23
ARTICLE 13. EXTENSION OF TIME FOR PERFORMANCE 24
ARTICLE 14. COMPLETION AND FINAL ACCEPTANCE OF THE WORK 27
ARTICLE 15. LIQUIDATED DAMAGES 28
ARTICLE 16. OCCUPATION OR USE PRIOR TO COMPLETION 29
CHAPTER IV: SUBCONTRACTS AND ASSIGNMENTS 29
ARTICLE 17. SUBCONTRACTS 29
ARTICLE 18. ASSIGNMENTS 31
CHAPTER V: CONTRACTOR'S SECURITY AND GUARANTEE 32
ARTICLE 19. SECURITY DEPOSIT 32
ARTICLE 20. PAYMENT GUARANTEE 32
ARTICLE 21. RETAINED PERCENTAGE 35
ARTICLE 22. INSURANCE 35
ARTICLE 23. MONEY RETAINED AGAINST CLAIMS 41
ARTICLE 24. MAINTENANCE AND GUARANTY 42
CHAPTER VI: CHANGES, EXTRA WORK, AND DOCUMENTATION OF CLAIM 43
ARTICLE 25. CHANGES 43
ARTICLE 26. METHODS OF PAYMENT FOR OVERRUNS AND EXTRA WORK 43
ARTICLE 27. RESOLUTION OF DISPUTES 46
ARTICLE 28. RECORD KEEPING FOR EXTRA OR DISPUTED WORK OR WORK ON ATIME & MATERIALS BASIS 50
ARTICLE 29. OMITTED WORK 51
ARTICLE 30. NOTICE AND DOCUMENTATION OF COSTS AND DAMAGES;PRODUCTION OF FINANCIAL RECORDS 51
CHAPTER VII: POWERS OF THE RESIDENT ENGINEER, THE ENGINEER ORARCHITECT

AND THE COMMISSIONER 52
ARTICLE 31. THE RESIDENT ENGINEER 52
ARTICLE 32. THE ENGINEER OR ARCHITECT OR PROJECT MANAGER 53
ARTICLE 33. THE COMMISSIONER 53
ARTICLE 34. NO ESTOPPEL 54
CHAPTER VIII: LABOR PROVISIONS 54
ARTICLE 35. EMPLOYEES 54
ARTICLE 36. NO DISCRIMINATION 61
ARTICLE 37. LABOR LAW REQUIREMENTS 63
ARTICLE 38. PAYROLL REPORTS 68
ARTICLE 39. DUST HAZARDS 69
CHAPTER IX: PARTIAL AND FINAL PAYMENTS 69
ARTICLE 40. CONTRACT PRICE 69
ARTICLE 41. BID BREAKDOWN ON LUMP SUM 69
ARTICLE 42. PARTIAL PAYMENTS 70
ARTICLE 43. PROMPT PAYMENT 70
ARTICLE 44. SUBSTANTIAL COMPLETION PAYMENT 71
ARTICLE 45. FINAL PAYMENT 72
ARTICLE 46. ACCEPTANCE OF FINAL PAYMENT 73
ARTICLE 47. APPROVAL BY PUBLIC DESIGN COMMISSION 73
CHAPTER X: CONTRACTOR'S DEFAULT 74
ARTICLE 48. COMMISSIONER'S RIGHT TO DECLARE CONTRACTOR IN DEFAULT 74
ARTICLE 49. EXERCISE OF THE RIGHT TO DECLARE DEFAULT 75
ARTICLE 50. QUITTING THE SITE 75
ARTICLE 51. COMPLETION OF THE WORK 75
ARTICLE 52. PARTIAL DEFAULT 76
ARTICLE 53. PERFORMANCE OF UNCOMPLETED WORK 76
ARTICLE 54. OTHER REMEDIES 76
CHAPTER XI: MISCELLANEOUS PROVISIONS 77
ARTICLE 55. CONTRACTOR'S WARRANTIES 77
ARTICLE 56. CLAIMS AND ACTIONS THEREON 77
ARTICLE 57. INFRINGEMENT 78
ARTICLE 58. NO CLAIM AGAINST OFFICIALS, AGENTS OR EMPLOYEES 78
ARTICLE 59. SERVICE OF NOTICES 78
ARTICLE 60. UNLAWFUL PROVISIONS DEEMED STRICKEN FROM CONTRACT 78
ARTICLE 61. ALL LEGAL PROVISIONS DEEMED INCLUDED 79
ARTICLE 62. TAX EXEMPTION 79
ARTICLE 63. INVESTIGATION(S) CLAUSE 80
ARTICLE 64. TERMINATION BY THE CITY 82
ARTICLE 65. CHOICE OF LAW, CONSENT TO JURISDICTION AND VENUE 85
ARTICLE 66. PARTICIPATION IN AN INTERNATIONAL BOYCOTT 85
ARTICLE 67. LOCALLY BASED ENTERPRISE PROGRAM 86
ARTICLE 68. ANTITRUST 87
ARTICLE 69. MacBRIDE PRINCIPLES PROVISIONS 87
ARTICLE 70. ELECTRONIC FILING/NYC DEVELOPMENT HUB 89
ARTICLE 71. PROHIBITION OF TROPICAL HARDWOODS 89
ARTICLE 72. CONFLICTS OF INTEREST 89

ARTICLE 73. MERGER CLAUSE **89**
ARTICLE 74. STATEMENT OF WORK **89**
ARTICLE 75. COMPENSATION TO BE PAID TO CONTRACTOR **90**
ARTICLE 76. ELECTRONIC FUNDS TRANSFER **90**
ARTICLE 77. RECORDS RETENTION **90**
ARTICLE 78. EXAMINATION AND VIEWING OF SITE, CONSIDERATION OF OTHER SOURCES OF INFORMATION AND CHANGED SITE CONDITIONS **90**
ARTICLE 79. PARTICIPATION BY MINORITY-OWNED AND WOMEN-OWNED BUSINESS ENTERPRISES IN CITY PROCUREMENT **91**
PERFORMANCE BOND #1 ..... **99**
PERFORMANCE BOND #2 ..... **103**
PAYMENT BOND **107**

(NO TEXT ON THIS PAGE)

WITNESSETH:

The parties, in consideration of the mutual agreements contained herein, agree as follows:

CHAPTER I: THE CONTRACT AND DEFINITIONS

ARTICLE 1. THE CONTRACT

1.1 Except for titles, subtitles, headings, running headlines, tables of contents and indices (all of which are printed herein merely for convenience), the following, except for such portions thereof as maybe specifically excluded, shall be deemed to be part of this **Contract**:

1.1.1 All provisions required by law to be inserted in this **Contract**, whether actuallyinserted or not;

1.1.2 The Contract Drawings and Specifications;

1.1.3 The General Conditions and Special Conditions, if any;

1.1.4 The **Contract**;

1.1.5 The Information for Bidders; Request for Proposals; Notice of Solicitation andProposal For Bids; Bid or Proposal, and, if used, the Bid Booklet;

1.1.6 All Addenda issued prior to the receipt of the bids; the Notice of Award; Performance and Payment Bonds, if required; and the Notice to Proceed or the Order to Work.

1.2 Should any conflict occur in or between the Drawings and Specifications, the **Contractor** shall be deemed to have estimated the most expensive way of doing the **Work**, unless the **Contractor** shall have asked for and obtained a decision in writing from the **Commissioner** of the **Agency** that is entering into this **Contract**, before the submission of its bid, as to what shall govern.

ARTICLE 2. DEFINITIONS

2.1 The following words and expressions, or pronouns used in their stead, shall, wherever they appear in this Contract, be construed as follows, unless a different meaning is clear from the context:

2.1.1 **"Addendum"** or **"Addenda"** shall mean the additional Contract provisions and/or technical clarifications issued in writing by the Commissioner prior to the receipt of bids.

2.1.2 **"Agency"** shall mean a city, county, borough or other office, position, department, division, bureau, board or commission, or a corporation, institution or agency of government, the expenses of which are paid in whole or in part from the City treasury.

2.1.3 **"Agency Chief Contracting Officer" (ACCO)** shall mean a person delegated authority by the Commissioner to organize and supervise the procurement activity of subordinate Agency staff in conjunction with the CCPO, or his/her duly authorized representative.

2.1.4 **"Allowance"** shall mean a sum of money which the Agency may include in the total amount of the Contract for such specific contingencies as the Agency believes may be necessary to complete the Work, *e.g.*, lead or asbestos remediation, and for which the Contractor will be paid on the basis of stipulated unit prices or a formula set forth in the Contract or negotiated between the parties provided, however, that if the Contractor is not directed to use the Allowance, the Contractor shall have no right to such money and it shall be deducted from the total amount of the Contract.

2.1.5 **"City"** shall mean the City of New York.

2.1.6 **"City Chief Procurement Officer" (CCPO)** shall mean a person delegated authority by the Mayor to coordinate and oversee the procurement activity of Mayoral agency staff, including the ACCO and any offices which have oversight responsibility for the procurement of construction, or his/her duly authorized representative.

2.1.7 **"Commissioner"** shall mean the head of the Agency that has entered into this Contract, or his/her duly authorized representative.

2.1.8 **"Comptroller"** shall mean the Comptroller of the City of New York.

2.1.9 **"Contract"** or **"Contract Documents"** shall mean each of the various parts of the contract referred to in Article 1 hereof, both as a whole and severally.

2.1.10 **"Contract Drawings"** shall mean only those drawings specifically entitled as such and listed in the Specifications or in any Addendum, or any drawings furnished by the Commissioner, pertaining or supplemental thereto.

2.1.11 **"Contract Work"** shall mean everything required to be furnished and done by the Contractor by any one or more of the parts of the Contract referred to in Article 1, except Extra Work as hereinafter defined.

2.1.12 **"Contractor"** shall mean the entity which executed this Contract, whether a corporation, firm, partnership, joint venture, individual, or any combination thereof, and its, their, his/her successors, personal representatives, executors, administrators, and assigns, and any person, firm, partnership, joint venture, individual, or corporation which shall at any time be substituted in the place of the Contractor under this Contract.

2.1.13 **"Days"** shall mean calendar days, except where otherwise specified.

2.1.14 **"Engineer"** or **"Architect"** or **"Project Manager"** shall mean the person so designated in writing by the Commissioner in the Notice to Proceed or the Order to Work to act as such in relation to this Contract, including a private Architect or Engineer or Project Manager, as the case may be. Subject to written approval by the Commissioner, the Engineer, Architect or Project Manager may designate an authorized representative.

2.1.15 **"Engineering Audit Officer" (EAO)** shall mean the person so designated by the Commissioner to perform responsible auditing functions hereunder.

2.1.16 **"Extra Work"** shall mean Work other than that required by the Contract at the time of award which is authorized by the Commissioner pursuant to Chapter VI of this Contract.

2.1.17 **"Federal-Aid Contract"** shall mean a contract in which the United States (federal) Government provides financial funding as so designated in the Information for Bidders.

2.1.18 **"Final Acceptance"** shall mean final written acceptance of all the Work by the Commissioner, a copy of which shall be sent to the Contractor.

2.1.19 **"Final Approved Punch List"** shall mean a list, approved pursuant to Article 14.2.2, specifying those items of Work to be completed by the Contractor after Substantial Completion and dates for the completion of each item of Work.

2.1.20 **"Law"** or **"Laws"** shall mean the Constitution of the State of New York, the New York City Charter, the New York City Administrative Code, a statute of the United States or of the State of New York, a local law of the City of New York, any ordinance, rule or regulation having the force of law, or common law.

2.1.21 **"Materialman"** shall mean any corporation, firm, partnership, joint venture, or individual, other than employees of the Contractor, who or which contracts with the Contractor or any Subcontractor, to fabricate or deliver, or who actually fabricates or delivers, plant, materials or equipment to be incorporated in the Work.

2.1.22 **"Means and Methods of Construction"** shall mean the labor, materials, temporary structures, tools, plant, and construction equipment, and the manner and time of their use, necessary to accomplish the result intended by this Contract.

2.1.23**"Notice to Proceed" or "Order to Work"** shall mean the written notice issued bythe Commissioner specifying the time for commencement of the Work and the Engineer, Architect or Project Manager.

2.1.24 **"Other Contractor(s)"** shall mean any contractor (other than the entity which executed this Contract or its Subcontractors) who or which has a contract with the City for work on or adjacent to the building or Site of the Work.

2.1.25 **"Payroll Taxes"** shall mean State Unemployment Insurance (SUI), Federal Unemployment Insurance (FUI), and payments pursuant to the Federal Insurance Contributions Act (FICA).

2.1.26 **"Project"** shall mean the public improvement to which this Contract relates.

2.1.27 **"Procurement Policy Board" (PPB)** shall mean the Agency of the City of New York whose function is to establish comprehensive and consistent procurement policies and rules which shall have broad application throughout the City.

2.1.28 **"Required Quantity"** in a unit price Contract shall mean the actual quantity of any item of Work or materials which is required to be performed or furnished in order to comply with the Contract.

2.1.29 **"Resident Engineer"** shall mean the representative of the Commissioner duly designated by the Commissioner to be his/her representative at the site of the Work.

2.1.30 **"Site"** shall mean the area upon or in which the Contractor's operations are carried on, and such other areas adjacent thereto as may be designated as such by the Engineer.

2.1.31 **"Small Tools"** shall mean items that are ordinarily required for a worker's job

function, including but not limited to, equipment that ordinarily has no licensing, insurance or substantive storage costs associated with it; such as circular and chain saws, impactdrills, threaders, benders, wrenches, socket tools, etc.

2.1.32 **"Specifications"** shall mean all of the directions, requirements, and standards of performance applying to the Work as hereinafter detailed and designated under the Specifications.

2.1.33 **"Subcontractor"** shall mean any person, firm or corporation, other than employees of the Contractor, who or which contracts with the Contractor or with its subcontractors to furnish, or actually furnishes labor, or labor and materials, or labor and equipment, or superintendence, supervision and/or management at the Site. Wherever the word Subcontractor appears, it shall also mean sub-Subcontractor.

2.1.34 **"Substantial Completion"** shall mean the written determination by the Engineer that the Work required under this Contract is substantially, but not entirely, complete and the approval of the **Final Approved Punch List**.

2.1.35 **"Work"** shall mean all services required to complete the Project in accordance with the Contract Documents, including without limitation, labor, material, superintendence, management, administration, equipment, and incidentals, and obtaining any and all permits, certifications and licenses as may be necessary and required to complete the Work, and shall include both Contract Work and Extra Work.

CHAPTER II: THE WORK AND ITS PERFORMANCE

ARTICLE 3. CHARACTER OF THE WORK

3.1 Unless otherwise expressly provided in the **Contract Drawings**, **Specifications,** and **Addenda**, the **Work** shall be performed in accordance with the best modern practice, utilizing, unless otherwise specified in writing, new and unused materials of standard first grade quality and workmanship anddesign of the highest quality, to the satisfaction of the **Commissioner**.

ARTICLE 4. MEANS AND METHODS OF CONSTRUCTION

4.1 Unless otherwise expressly provided in the **Contract Drawings**, **Specifications,** and **Addenda**, the **Means and Methods of Construction** shall be such as the **Contractor** may choose; subject, however, to the **Engineer's** right to reject the **Means and Methods of Construction** proposed by the **Contractor** which in the opinion of the **Engineer**:

4.1.1 Will constitute or create a hazard to the **Work**, or to persons or property; or

4.1.2 Will not produce finished **Work** in accordance with the terms of the **Contract**; or

4.1.3 Will be detrimental to the overall progress of the **Project**.

4.2 The **Engineer's** approval of the **Contractor's Means and Methods of Construction**, orhis/her failure to exercise his/her right to reject such means or methods, shall not relieve the **Contractor** of its obligation to complete the **Work** as provided in this **Contract**; nor shall the exercise of such rightto reject

create a cause of action for damages.

ARTICLE 5. COMPLIANCE WITH LAWS

5.1 The **Contractor** shall comply with all **Laws** applicable to this **Contract** and to the **Work** to be done hereunder.

5.2 Procurement Policy Board Rules: This **Contract** is subject to the Rules of the **PPB** ("**PPB** Rules") in effect at the time of the bid opening for this **Contract**. In the event of a conflict between the **PPB** Rules and a provision of this **Contract**, the **PPB** Rules shall take precedence.

5.3 Noise Control Code provisions.

5.3.1 In accordance with the provisions of Section 24-216(b) of the Administrative Code of the **City** ("Administrative Code"), Noise Abatement Contract Compliance, devices and activities which will be operated, conducted, constructed or manufactured pursuant to this **Contract** and which are subject to the provisions of the **City** Noise Control Code shall be operated, conducted, constructed, or manufactured without causing a violation of the Administrative Code. Such devices and activities shall incorporate advances in the art of noise control development for the kind and level of noise emitted or produced by such devices and activities, in accordance with regulations issued by the **Commissioner** of the **City** Department of Environmental Protection.

5.3.2 The **Contractor** agrees to comply with Section 24-219 of the Administrative Code and implementing rules codified at 15 Rules of the City of New York ("RCNY") Section 28-100 *et seq*. In accordance with such provisions, the **Contractor**, if the **Contractor** is the responsible party under such regulations, shall prepare and post a Construction Noise Mitigation Plan at each **Site**, in which the **Contractor** shall certify that all construction tools and equipment have been maintained so that they operate at normal manufacturers operating specifications. If the **Contractor** cannot make this certification, it must have in place an Alternative Noise Mitigation Plan approved by the **City** Department of Environmental Protection. In addition, the **Contractor**'s certified Construction Noise Mitigation Plan is subject inspection by the **City** Department of Environmental Protection in accordance with Section 28-101 of Title 15 of RCNY. No **Contract Work** may take place at a **Site** unless there is a Construction Noise Mitigation Plan or approved Alternative Noise Mitigation Plan in place. In addition, the **Contractor** shall create and implement a noise mitigation training program. Failure to comply with these requirements may result in fines and other penalties pursuant to the applicable provisions of the Administrative Code and RCNY.

5.4 Ultra Low Sulfur Diesel Fuel: In accordance with the provisions of Section 24-163.3 of the Administrative Code, the **Contractor** specifically agrees as follows:

5.4.1 Definitions. For purposes of this Article 5.4, the following definitions apply:

5.4.1(a) "Contractor" means any person or entity that enters into a Public Works Contract with a **City Agency**, or any person or entity that enters into an agreement with such person or entity, to perform work or provide labor or services related to such Public Works Contract.

5.4.1(b) "Motor Vehicle" means any self-propelled vehicle designed for transporting

persons or property on a street or highway.

5.4.1(c) "Nonroad Engine" means an internal combustion engine (including the fuel system) that is not used in a Motor Vehicle or a vehicle used solely for competition,or that is not subject to standards promulgated under Section 7411 or Section 7521 of Title 42 of the United States Code, except that this term shall apply to internal combustion engines used to power generators, compressors or similar equipment used in any construction program or project.

5.4.1(d) "Nonroad Vehicle" means a vehicle that is powered by a Nonroad Engine, fifty (50) horsepower and greater, and that is not a Motor Vehicle or a vehicle used solely for competition, which shall include, but not be limited to, excavators, backhoes, cranes, compressors, generators, bulldozers, and similar equipment, except that this term shall not apply to horticultural maintenance vehicles used for landscaping purposes that are powered by a Nonroad Engine of sixty-five (65) horsepower or less and that are not used in any construction program or project.

5.4.1(e) "Public Works Contract" means a contract with a **City Agency** for a construction program or project involving the construction, demolition, restoration, rehabilitation, repair, renovation, or abatement of any building, structure, tunnel, excavation, roadway, park or bridge; a contract with a **City Agency** for the preparation for any construction program or project involving the construction, demolition, restoration, rehabilitation, repair, renovation, or abatement of any building, structure, tunnel, excavation, roadway, park or bridge; or a contract with a **City Agency** for any final work involved in the completion of any construction program or project involving the construction, demolition, restoration, rehabilitation, repair, renovation, or abatement of any building, structure, tunnel, excavation, roadway, park or bridge.

5.4.1(f) "Ultra Low Sulfur Diesel Fuel" means diesel fuel that has a sulfur content of no more than fifteen parts per million (15 ppm).

5.4.2 Ultra Low Sulfur Diesel Fuel

5.4.2(a) All **Contractors** shall use Ultra Low Sulfur Diesel Fuel in diesel-powered Nonroad Vehicles in the performance of this **Contract**.

5.4.2(b) Notwithstanding the requirements of Article 5.4.2(a), **Contractors** may use diesel fuel that has a sulfur content of no more than thirty parts per million (30 ppm)to fulfill the requirements of this Article 5.4.2, where the Commissioner of the **City** Department of Environmental Protection ("DEP Commissioner") has issued a determination that a sufficient quantity of Ultra Low Sulfur Diesel Fuel is not available to meet the needs of **Agencies** and **Contractors**. Any such determination shall expire after six (6) months unless renewed.

5.4.2(c) **Contractors** shall not be required to comply with this Article 5.4.2 where the **City Agency** letting this **Contract** makes a written finding, which is approved, in writing, by the DEP Commissioner, that a sufficient quantity of Ultra Low Sulfur Diesel Fuel, or diesel fuel that has a sulfur content of no more than thirty parts per million (30 ppm) is not available to meet the requirements of Section 24-163.3 of the Administrative Code, provided that such **Contractor** in its fulfillment of the requirements of this **Contract**, to the extent practicable, shall use whatever quantity of Ultra Low Sulfur Diesel Fuel or diesel fuel that has a sulfur content of no more than thirty parts per

million (30 ppm) is available. Any finding made pursuant to this Article 5.4.2(c) shall expire after sixty (60) **Days**, at which time the requirements of this Article 5.4.2 shall be in full force and effect unless the **City Agency** renews the finding in writing and such renewal is approved by the DEP Commissioner.

5.4.2(d) **Contractors** may check on determinations and approvals issued by the DEP Commissioner pursuant to Section 24-163.3 of the Administrative Code, if any, at www.dep.nyc.gov or by contacting the **City Agency** letting this **Contract**.

5.4.2(e) The requirements of this Article 5.4.2 do not apply where they are precluded by federal or State funding requirements or where the **Contract** is an emergency procurement.

5.4.3 Best Available Technology

5.4.3(a) All **Contractors** shall utilize the best available technology for reducing the emission of pollutants for diesel-powered Nonroad Vehicles in the performance of this **Contract**. For determinations of best available technology for each type of diesel-powered Nonroad Vehicle, **Contractors** shall comply with the regulations of the **City** Department of Environmental Protection, as and when adopted, Chapter 14 of Title 15 of the Rules of the City of New York (RCNY). The **Contractor** shall fully document all steps in the best available technology selection process and shall furnish such documentation to the **City Agency** or the DEP Commissioner upon request. The **Contractor** shall retain all documentation generated in the best available technology selection process for as long as the selected best available technology is in use.

5.4.3(b) No **Contractor** shall be required to replace best available technology for reducing the emission of pollutants or other authorized technology utilized for a diesel-powered Nonroad Vehicle in accordance with the provisions of this Article 5.4.3 within three (3) years of having first utilized such technology for such vehicle.

5.4.3(c) This Article 5.4.3 shall not apply to any vehicle used to satisfy the requirements of a specific Public Works Contract for fewer than twenty (20) **Days**.

5.4.3(d) The **Contractor** shall not be required to comply with this Article 5.4.3 with respect to a diesel-powered Nonroad Vehicle under the following circumstances:

5.4.3(d)(i) Where the **City Agency** makes a written finding, which is approved, in writing, by the DEP Commissioner, that the best available technology for reducing the emission of pollutants as required by this Article 5.4.3 is unavailable for such vehicle, the **Contractor** shall use whatever technology for reducing the emission of pollutants, if any, is available and appropriate for such vehicle.

5.4.3(d)(ii) Where the DEP Commissioner has issued a written waiver based upon the Contractor having demonstrated to the DEP Commissioner that the use of the best available technology for reducing the emission of pollutants might endanger the operator of such vehicle or those working near such vehicle, due to engine malfunction, the **Contractor** shall use whatever technology for reducing the emission of pollutants, if any, is available and appropriate for such vehicle, which would not endanger the operator of such vehicle or those working near such vehicle.

5.4.3(d)(iii) In determining which technology to use for the purposes of Articles 5.4.3(d)(i) and 5.4.3(d)(ii) above, the **Contractor** shall primarily consider the reduction in emissions of particulate matter and secondarily consider the reduction in emissions of nitrogen oxides associated with the use of such technology, which shall in no event result in an increase in the emissions of either such pollutant.

5.4.3(d)(iv) The **Contractor** shall submit requests for a finding or a waiver pursuant to this Article 5.4.3(d) in writing to the DEP Commissioner, with a copy to the **ACCO** of the **City Agency** letting this **Contract**. Any finding or waiver made or issued pursuant to Articles 5.4.3(d)(i) and 5.4.3(d)(ii) above shall expire after one hundred eighty (180) **Days**, at which time the requirements of Article 5.4.3(a) shall be in full force and effect unless the **City Agency** renews the finding, in writing, and the DEP Commissioner approves such finding, in writing, or the DEP Commissioner renews the waiver, in writing.

5.4.3(e) The requirements of this Article 5.4.3 do not apply where they are precluded by federal or State funding requirements or where the **Contract** is an emergency procurement.

5.4.4 Section 24-163 of the Administrative Code. The **Contractor** shall comply with Section 24-163 of the Administrative Code related to the idling of the engines of motor vehicles while parking.

5.4.5 Compliance

5.4.5(a) The **Contractor's** compliance with Article 5.4 may be independently monitored. If it is determined that the **Contractor** has failed to comply with any provision of Article 5.4, any costs associated with any independent monitoring incurred by the **City** shall be reimbursed by the **Contractor**.

5.4.5(b) Any **Contractor** who violates any provision of Article 5.4, except as provided in Article 5.4.5(c) below, shall be liable for a civil penalty between the amounts of one thousand ($1,000) and ten thousand ($10,000) dollars, in addition to twice the amount of money saved by such **Contractor** for failure to comply with Article 5.4.

5.4.5(c) No **Contractor** shall make a false claim with respect to the provisions of Article 5.4 to a **City Agency**. Where a **Contractor** has been found to have done so, such **Contractor** shall be liable for a civil penalty of twenty thousand ($20,000) dollars, in addition to twice the amount of money saved by such **Contractor** in association with having made such false claim.

5.4.6 Reporting

5.4.6(a) For all Public Works Contracts covered by this Article 5.4, the **Contractor** shall report to the **City Agency** the following information:

5.4.6(a)(i) The total number of diesel-powered Nonroad Vehicles used to fulfill the requirements of this Public Works Contract;

5.4.6(a)(ii) The number of such Nonroad Vehicles that were powered by Ultra Low Sulfur Diesel Fuel;

5.4.6(a)(iii) The number of such Nonroad Vehicles that utilized the best available technology for reducing the emission of pollutants, including a breakdown by vehicle model and the type of technology;

5.4.6(a)(iv) The number of such Nonroad Vehicles that utilized such other authorized technology in accordance with Article 5.4.3, including a breakdown by vehicle model and the type of technology used for each such vehicle;

5.4.6(a)(v) The locations where such Nonroad Vehicles were used; and

5.4.6(a)(vi) Where a determination is in effect pursuant to Article 5.4.2(b) or 5.4.2(c), detailed information concerning the **Contractor's** efforts to obtain Ultra Low Sulfur Diesel Fuel or diesel fuel that has a sulfur content of no more than thirty parts per million (30 ppm).

5.4.6(b) The **Contractor** shall submit the information required by Article 5.4.6(a) at the completion of **Work** under the Public Works Contract and on a yearly basis no later than August 1 throughout the term of the Public Works Contract. The yearly report shall cover **Work** performed during the preceding fiscal year (July 1 - June 30).

5.5 Ultra Low Sulfur Diesel Fuel. In accordance with the Coordinated Construction Act for Lower Manhattan, as amended:

5.5.1 Definitions. For purposes of this Article 5.5, the following definitions apply:

5.5.1(a) "Lower Manhattan" means the area to the south of and within the following lines: a line beginning at a point where the United States pierhead line in the Hudson River as it exists now or may be extended would intersect with the southerly line of West Houston Street in the Borough of Manhattan extended, thence easterly along the southerly side of West Houston Street to the southerly side of Houston Street, thence easterly along the southerly side of Houston Street to the southerly side of East Houston Street, thence northeasterly along the southerly side of East Houston Street to the point where it would intersect with the United States pierhead line in the East River as it exists now or may be extended, including tax lots within or immediately adjacent thereto.

5.5.1(b) "Lower Manhattan Redevelopment Project" means any project in Lower Manhattan that is funded in whole or in part with federal or State funding, or any project intended to improve transportation between Lower Manhattan and the two air terminals in the **City** known as LaGuardia Airport and John F. Kennedy International Airport, or between Lower Manhattan and the air terminal in Newark known as Newark Liberty International Airport, and that is funded in whole or in part with federal funding.

5.5.1(c) "Nonroad Engine" means an internal combustion engine (including the fuel system) that is not used in a Motor Vehicle or a vehicle used solely for competition, or that is not subject to standards promulgated under Section 7411 or Section 7521 of Title 42 of the United States Code, except that this term shall apply to internal combustion engines used to power generators, compressors or similar equipment used in any construction program or project.

5.5.1(d) "Nonroad Vehicle" means a vehicle that is powered by a Nonroad Engine, fifty (50) horsepower (HP) and greater, and that is not a Motor Vehicle or a vehicle used

solely for competition, which shall include, but not be limited to, excavators, backhoes, cranes, compressors, generators, bulldozers, and similar equipment, except that this terms shall not apply to horticultural maintenance vehicles used for landscaping purposes that are powered by a Nonroad Engine of sixty-five (65) HP or less and that are not used in any construction program or project.

5.5.1(e) "Ultra Low Sulfur Diesel Fuel" means diesel fuel that has a sulfur content of no more than fifteen parts per million (15 ppm).

5.5.2 Requirements. **Contractors** and **Subcontractors** are required to use only Ultra Low Sulfur Diesel Fuel to power the diesel-powered Nonroad Vehicles with engine HP rating of fifty (50) HP and above used on a Lower Manhattan Redevelopment Project and, where practicable, to reduce the emission of pollutants by retrofitting such Nonroad Vehicles with oxidation catalysts, particulate filters, or technology that achieves lowest particulate matter emissions.

5.6 Pesticides. In accordance with Section 17-1209 of the Administrative Code, to the extent that the **Contractor** or any **Subcontractor** applies pesticides to any property owned or leased by the **City**, the **Contractor,** and any **Subcontractor** shall comply with Chapter 12 of the Administrative Code.

5.7 Waste Treatment, Storage, and Disposal Facilities and Transporters. In connection withthe **Work**, the **Contractor** and any **Subcontractor** shall use only those waste treatment, storage, and disposal facilities and waste transporters that possess the requisite license, permit or other governmental approval necessary to treat, store, dispose, or transport the waste, materials or hazardous substances.

5.8 Environmentally Preferable Purchasing. The **Contractor** shall ensure that products purchased or leased by the **Contractor** or any **Subcontractor** for the **Work** that are not specified by the **City** or are submitted as equivalents to a product specified by the **City** comply with the requirements of the New York City Environmentally Preferable Purchasing Program contained in Chapter 11 of Title 43 of the RCNY, pursuant to Chapter 3 of Title 6 of the Administrative Code.

ARTICLE 6. INSPECTION

6.1 During the progress of the **Work** and up to the date of **Final Acceptance**, the **Contractor** shall at all times afford the representatives of the **City** every reasonable, safe, and proper facility for inspecting all **Work** done or being done at the **Site** and also for inspecting the manufacture or preparation of materials and equipment at the place of such manufacture or preparation.

6.2 The **Contractor's** obligation hereunder shall include the uncovering or taking down of finished **Work** and its restoration thereafter; provided, however, that the order to uncover, take down and restore shall be in writing, and further provided that if **Work** thus exposed proves satisfactory, and if the **Contractor** has complied with Article 6.1, such uncovering or taking down and restoration shall be considered an item of **Extra Work** to be paid for in accordance with the provisions of Article 26. If the **Work** thus exposed proves unsatisfactory, the **City** has no obligation to compensate the **Contractor** for the uncovering, taking down or restoration.

6.3 Inspection and approval by the **Commissioner**, the **Engineer**, **Project Manager**, or **Resident Engineer**, of finished **Work** or of **Work** being performed, or of materials and equipment at the place of manufacture or preparation, shall not relieve the **Contractor** of its obligation to perform the **Work** in strict accordance with the **Contract**. Finished or unfinished **Work** not found to be in strict accordance with the

Contract shall be replaced as directed by the **Engineer**, even though such **Work** may have been previously approved and paid for. Such corrective **Work** is **Contract Work** and shall not be deemed **Extra Work**.

6.4 Rejected **Work** and materials shall be promptly taken down and removed from the **Site**, which must at all times be kept in a reasonably clean and neat condition.

ARTICLE 7. PROTECTION OF WORK AND OF PERSONS AND PROPERTY; NOTICESAND INDEMNIFICATION

7.1 During the performance of the **Work** and up to the date of **Final Acceptance**, the **Contractor** shall be under an absolute obligation to protect the finished and unfinished **Work** against any damage, loss, injury, theft and/or vandalism and in the event of such damage, loss, injury, theft and/or vandalism,it shall promptly replace and/or repair such **Work** at the **Contractor's** sole cost and expense, as directed by the **Resident Engineer**. The obligation to deliver finished **Work** in strict accordance with the **Contract** prior to **Final Acceptance** shall be absolute and shall not be affected by the **Resident Engineer's** approval of, or failure to prohibit, the **Means and Methods of Construction** used by the **Contractor**.

7.2 During the performance of the **Work** and up to the date of **Final Acceptance**, the **Contractor** shall take all reasonable precautions to protect all persons and the property of the **City** and of others from damage, loss or injury resulting from the **Contractor's**, and/or its **Subcontractors'** operations under this **Contract.** The **Contractor's** obligation to protect shall include the duty to provide, place or replace, and adequately maintain at or about the **Site** suitable and sufficient protection such as lights, barricades, and enclosures.

7.3 The **Contractor** shall comply with the notification requirements set forth below in the event of any loss, damage or injury to **Work**, persons or property, or any accidents arising out of the operations of the **Contractor** and/or its **Subcontractors** under this **Contract**.

7.3.1 The **Contractor** shall make a full and complete report in writing to the **Resident Engineer** within three (3) **Days** after the occurrence.

7.3.2 The **Contractor** shall also send written notice of any such event to all insurance carriers that issued potentially responsive policies (including commercial general liability insurance carriers for events relating to the **Contractor**'s own employees) no later than twenty (20) days after such event and again no later than twenty (20) days after the initiation of any claim and/or action resulting therefrom. Such notice shall contain the following information: the number of the insurance policy, the name of the Named Insured, the date and location of the incident, and the identity of the persons injured or property damaged. For any policy on which the **City** and/or the **Engineer**, **Architect**, or **Project Manager** are Additional Insureds, such notice shall expressly specify that "this notice is being given on behalf of the City of New York as Additional Insured, such other AdditionalInsureds, as well as the Named Insured."

7.3.2(a) Whenever such notice is sent under a policy on which the **City** is an Additional Insured, the **Contractor** shall provide copies of the notice to the **Comptroller,** the **Commissioner** and the **City** Corporation Counsel. The copy to the **Comptroller** shall be sent to the Insurance Unit, NYC Comptroller's Office, 1 Centre Street – Room 1222, New York, New York, 10007. The copy to the **Commissioner** shall be sent to the address set forth in Schedule A of the General Conditions. The copy to the **City** Corporation Counsel shall be sent to Insurance Claims Specialist, Affirmative Litigation

Division, New York City Law Department, 100 Church Street, New York, New York 10007.

7.3.2(b) If the **Contractor** fails to provide any of the foregoing notices to anyappropriate insurance carrier(s) in a timely and complete manner, the **Contractor**shall indemnify the **City** for all losses, judgments, settlements, and expenses, including reasonable attorneys' fees, arising from an insurer's disclaimer of coverage citing late notice by or on behalf of the **City**.

7.4 To the fullest extent permitted by law, the **Contractor** shall defend, indemnify, and hold the **City**, its employees, and officials (the "Indemnitees") harmless against any and all claims (including but not limited to claims asserted by any employee of the **Contractor** and/or its **Subcontractors**) and costs and expenses of whatever kind (including but not limited to payment or reimbursement of attorneys' fees and disbursements) allegedly arising out of or in any way related to the operations of the **Contractor** and/or its **Subcontractors** in the performance of this **Contract** or from the **Contractor's** and/or its **Subcontractors'** failure to comply with any of the provisions of this **Contract** or of the **Law**. Such costs and expenses shall include all those incurred in defending the underlying claim and those incurred in connection with the enforcement of this Article 7.4 by way of cross-claim, third-party claim, declaratory action or otherwise. The parties expressly agree that the indemnification obligation hereunder contemplates (1) full indemnity in the event of liability imposed against the Indemnitees without negligence and solely by reason of statute, operation of **Law** or otherwise; and (2) partial indemnity in the event of any actual negligence on the part of the Indemnitees either causing orcontributing to the underlying claim (in which case, indemnification will be limited to any liability imposed over and above that percentage attributable to actual fault whether by statute, by operation of **Law**, or otherwise). Where partial indemnity is provided hereunder, all costs and expenses shall be indemnified on a pro rata basis.

7.4.1 Indemnification under Article 7.4 or any other provision of the **Contract** shall operate whether or not **Contractor** or its **Subcontractors** have placed and maintained the insurance specified under Article 22.

7.5 The provisions of this Article 7 shall not be deemed to create any new right of action in favor of third parties against the **Contractor** or the **City**.

CHAPTER III: TIME PROVISIONS

ARTICLE 8. COMMENCEMENT AND PROSECUTION OF THE WORK

8.1 The **Contractor** shall commence the **Work** on the date specified in the **Notice to Proceed** or the **Order to Work**. The time for performance of the **Work** under the **Contract** shall be computed from the date specified in the **Notice to Proceed** or the **Order to Work**. **TIME BEING OF THE ESSENCE** to the **City**, the **Contractor** shall thereafter prosecute the **Work** diligently, using such **Means and Methods of Construction** as are in accord with Article 4 herein and as will assure its completion not later than the date specified in this Contract, or on the date to which the time for completion may be extended.

ARTICLE 9. PROGRESS SCHEDULES

9.1 To enable the **Work** to be performed in an orderly and expeditious manner, the **Contractor**, within fifteen (15) **Days** after the **Notice to Proceed** or **Order to Work**, unless otherwise directed by the **Engineer**, shall submit to the **Engineer** a proposed progress schedule based on the Critical Path Methodin the form of

a bar graph or in such other form as specified by the **Engineer**, and monthly cash flow requirements, showing:

9.1.1 The anticipated time of commencement and completion of each of the variousoperations to be performed under this **Contract**; and

9.1.2 The sequence and interrelation of each of these operations with the others and with those of other related contracts; and

9.1.3 The estimated time required for fabrication or delivery, or both, of all materials and equipment required for the **Work**, including the anticipated time for obtaining required approvals pursuant to Article 10; and

9.1.4 The estimated amount in dollars the **Contractor** will claim on a monthly basis.

9.2 The proposed schedule shall be revised as directed by the **Engineer**, until finally approved by the **Engineer**, and after such approval, subject to the provisions of Article 11, shall be strictly adhered to by the **Contractor**.

9.3 If the **Contractor** shall fail to adhere to the approved progress schedule, or to the schedule as revised pursuant to Article 11, it shall promptly adopt such other or additional **Means and Methods of Construction**, at its sole cost and expense, as will make up for the time lost and will assure completion in accordance with the approved progress schedule. The approval by the **City** of a progress schedule which is shorter than the time allotted under the **Contract** shall not create any liability for the **City** if the approved progress schedule is not met.

9.4 The **Contractor** will not receive any payments until the proposed progress schedule is submitted.

ARTICLE 10. REQUESTS FOR INFORMATION OR APPROVAL

10.1 From time to time as the **Work** progresses and in the sequence indicated by the approved progress schedule, the **Contractor** shall submit to the **Engineer** a specific request in writing for each item of information or approval required by the **Contractor**. These requests shall state the latest date upon which the information or approval is actually required by the **Contractor**, and shall be submitted in a reasonable time in advance thereof to provide the **Engineer** a sufficient time to act upon such submissions, or any necessary re-submissions thereof.

10.2 The **Contractor** shall not have any right to an extension of time on account of delays due to the **Contractor's** failure to submit requests for the required information or the required approval in accordance with the above requirements.

ARTICLE 11. NOTICE OF CONDITIONS CAUSING DELAY AND DOCUMENTATION OF DAMAGES CAUSED BY DELAY

11.1 After the commencement of any condition which is causing or may cause a delay in completion of the **Work**, including conditions for which the **Contractor** may be entitled to an extension of time, the following notifications and submittals are required:

11.1.1 Within fifteen (15) **Days** after the **Contractor** becomes aware or reasonably should be

aware of each such condition, the **Contractor** must notify the **Resident Engineer** or **Engineer**, as directed by the **Commissioner**, in writing of the existence, nature and effect of such condition upon the approved progress schedule and the **Work**, and must state why and in what respects, if any, the condition is causing or may cause a delay. Such notice shall include a description of the construction activities that are or could be affected by the condition and may include any recommendations the **Contractor** may have to address the delay condition and any activities the **Contractor** may take to avoid or minimize the delay.

11.1.2 If the **Contractor** shall claim to be sustaining damages for delay as provided for in this Article 11,within forty-five (45) **Days** from the time such damages are first incurred for each such condition, the **Contractor** shall submit to the **Commissioner** a verified written statement of the details and estimates of the amounts of such damages, including categories of expected damages and projected monthly costs, together with documentary evidence of such damages as the **Contractor** may have at the time of submission ("statement of delay damages"), as further detailed in Article 11.6. The **Contractor** may submit the above statement within such additional time as may be granted by the **Commissioner** in writing upon written request therefor.

11.1.3 Articles 11.1.1 and 11.1.2 do not relieve the **Contractor** of its obligation to comply with the provisions of Article 44.

11.2 Failure of the **Contractor** to strictly comply with the requirements of Article 11.1.1 may, inthe discretion of the **Commissioner**, be deemed sufficient cause to deny any extension of time on account of delay arising out of such condition. Failure of the **Contractor** to strictly comply with the requirements of both Articles 11.1.1 and 11.1.2 shall be deemed a conclusive waiver by the **Contractor** of any and all claims for damages for delay arising from such condition and no right to recover on such claims shall exist.

11.3 When appropriate and directed by the **Engineer**, the progress schedule shall be revised by the **Contractor** until finally approved by the **Engineer**. The revised progress schedule must be strictly adhered to by the **Contractor**.

11.4 Compensable Delays

11.4.1 The **Contractor** agrees to make claim only for additional costs attributable to delayin the performance of this **Contrac**t necessarily extending the time for completion of the **Work** or resulting from acceleration directed by the **Commissioner** and required to maintain the progress schedule, occasioned solely by any act or omission to act of the **City** listed below. The **Contractor** also agrees that delay from any other cause shall be compensated, if at all, solely by an extension of time to complete the performance of the **Work**.

11.4.1.1 The failure of the **City** to take reasonable measures to coordinate and progress the **Work** to the extent required by the **Contract**, except that the City shall not be responsible for the **Contractor's** obligation to coordinate and progress the **Work** of its **Subcontractors**.

11.4.1.2 Unreasonable delays attributable to the review of shop drawings, the issuance of change orders, or the cumulative impact of change orders that were not brought about by any act or omission of the **Contractor**.

11.4.1.3 The unavailability of the **Site** caused by acts or omissions of the **City**..

11.4.1.4 The issuance by the **Engineer** of a stop work order that was not brought about through any act or omission of the **Contractor**.

11.4.1.5 Differing site conditions or environmental hazards that were neitherknown nor reasonably ascertainable on a pre-bid inspection of the **Site**or review

of the bid documents or other publicly available sources, and that are not ordinarily encountered in the **Project**'s geographical area or neighborhood or in the type of **Work** to be performed.

11.4.1.6 Delays caused by the **City's** bad faith or its willful, malicious, or grossly negligent conduct;

11.4.1.7 Delays not contemplated by the parties;

11.4.1.8 Delays so unreasonable that they constitute an intentional abandonment of the **Contract** by the **City**; and

11.4.1.9 Delays resulting from the **City's** breach of a fundamental obligation of the **Contract**.

11.4.2 No claim may be made for any alleged delay in **Substantial Completion** of the **Work** if the **Work** will be or is substantially completed by the date of **Substantial Completion** provided for in Schedule A unless acceleration has been directed by the **Commissioner** to meet the date of **Substantial Completion** set forth in Schedule A, or unless there is a provision in the **Contract** providing for additional compensation for early completion.

11.4.3 The provisions of this Article 11 apply only to claims for additional costs attributable to delay and do not preclude determinations by the **Commissioner** allowing reimbursements for additional costs for **Extra Work** pursuant to Articles 25 and 26 of this **Contract**. To the extent that any cost attributable to delay is reimbursed as part of a change order, no additional claim for compensation under this Article 11 shall be allowed.

11.5 Non-Compensable Delays. The **Contractor** agrees to make no claim for, and is deemed to have included in its bid prices for the various items of the **Contract**, the extra/additional costs attributable to any delays caused by or attributable to the items set forth below. For such items, the **Contractor** shall be compensated, if at all, solely by an extension of time to complete the performance of the **Work**, in accordance with the provisions of Article 13. Such extensions of time will be granted, if at all, pursuant to the grounds set forth in Article 13.3.

11.5.1 The acts or omissions of any third parties, including but not limited to **Other Contractors**, public/ governmental bodies (other than **City Agencies**), utilities or private enterprises, who are disclosed in the **Contract Documents** or are ordinarily encountered or generally recognized as related to the **Work**;

11.5.2 Any situation which was within the contemplation of the parties at the time of entering into the **Contract**, including any delay indicated or disclosed in the **Contract Documents** or that would be generally recognized by a reasonably prudent contractor as related to the nature of the **Work**, and/or the existence of any facility or appurtenance owned, operated or maintained by any third party, as indicated or disclosed in the **Contract Documents** or ordinarily encountered or generally recognized as related to the nature of the **Work**;

11.5.3 Restraining orders, injunctions or judgments issued by a court which were caused by a Contractor's submission, action or inaction or by a Contractor's **Means and Methods of Construction**, or by third parties, unless such order, injunction or judgment was the result of an act or omission by the **City**;

11.5.4 Any labor boycott, strike, picketing, lockout or similar situation;

11.5.5 Any shortages of supplies or materials, or unavailability of equipment, required by the **Contract Work**;

11.5.6 Climatic conditions, storms, floods, droughts, tidal waves, fires, hurricanes, earthquakes, landslides or other catastrophes or acts of God, or acts of war or of the public enemy or terrorist acts, including the **City's** reasonable responses thereto; and

11.5.7 **Extra Work** which does not significantly affect the overall completion of the **Contract**, reasonable delays in the review or issuance of change orders or field orders and/or in shop drawing reviews or approvals.

11.6 Required Content of Submission of Statement of Delay Damages

11.6.1 In the verified written statement of delay damages required by Article 11.1.2, the following information shall be provided by the **Contractor**:

11.6.1.1 For each delay, the start and end dates of the claimed periods of delay and, in addition, a description of the operations that were delayed, an explanation of how they were delayed, and the reasons for the delay, including identifying the applicable act or omission of the City listed in Article 11.4.

11.6.1.2 A detailed factual statement of the claim providing all necessary dates, locations and items of **Work** affected by the claim.

11.6.1.3 The estimated amount of additional compensation sought and a breakdown of that amount into categories as described in Article 11.7.

11.6.1.4 Any additional information requested by the **Commissioner**.

11.7 Recoverable Costs

11.7.1 Delay damages may be recoverable for the following costs actually and necessarily incurred in the performance of the **Work**:

11.7.1.1 Direct labor, including payroll taxes (subject to statutory wage caps) and supplemental benefits, based on time and materials records;

11.7.1.2 Necessary materials (including transportation to the **Site**), based on time and material records;

11.7.1.3 Reasonable rental value of necessary plant and equipment other than small tools, plus fuel/energy costs according to the applicable formula set forth in Articles 26.2.4 and/or 26.2.8, based on time and material records;

11.7.1.4 Additional insurance and bond costs;

11.7.1.5 Extended **Site** overhead, field office rental, salaries of field office staff, on-site project managers and superintendents, field office staff vehicles, **Project-**specific storage, field office utilities and telephone, and field office consumables;

11.7.1.6 Labor escalation costs based on actual costs;

11.7.1.7 Materials and equipment escalation costs based on applicable industry indices unless documentation of actual increased cost is provided;

11.7.1.8 Additional material and equipment storage costs based on actual documented costs and additional costs necessitated by extended manufacturer warranty periods; and

11.7.1.9 Extended home office overhead calculated based on the following formula:

(1) Subtract from the original **Contract** amount the amount earned by original contractual **Substantial Completion** date (not

including change orders);

(2) Remove 15% overhead and profit from the calculation in item (1) by dividing the results of item (1) by 1.15;

(3) Multiply the result of item (2) by 7.25% for the total home office overhead;

(4) Multiply the result of item (3) by 7.25% for the total profit; and

(5) The total extended home office overhead will be the total of items (3) and (4).

11.7.2 Recoverable Subcontractor Costs. When the **Work** is performed by a **Subcontractor**, the **Contractor** may be paid the actual and necessary costs of such subcontracted **Work** as outlined above in Articles 11.7.1.1 through 11.7.1.8, and an additional overhead of 5% of the costs outlined in Articles 11.7.1.1 through 11.7.1.3.

11.7.3 Non-Recoverable Costs. The parties agree that the **City** will have no liability for the following items and the **Contractor** agrees it shall make no claim for the following items:

11.7.3.1 Profit, or loss of anticipated or unanticipated profit, except as provided in Article 11.7.1.9;

11.7.3.2 Consequential damages, including, but not limited to, construction or bridge loans or interest paid on such loans, loss of bonding capacity, bidding opportunities, or interest in investment, or any resulting insolvency;

11.7.3.3 Indirect costs or expenses of any nature except those included in Article 11.7.1;

11.7.3.4 Direct or indirect costs attributable to performance of **Work** where the **Contractor**, because of situations or conditions within its control, hasnot progressed the **Work** in a satisfactory manner; and

11.7.3.5 Attorneys' fees and dispute and claims preparation expenses.

11.8 Any claims for delay under this Article 11 are not subject to the jurisdiction of the Contract Dispute Resolution Board pursuant to the dispute resolution process set forth in Article 27.

11.9 Any compensation provided to the **Contractor** in accordance with this Article 11 will be made pursuant to a claim filed with the **Comptroller**. Nothing in this Article 11 extendsthe time for the **Contractor** to file an action with respect to a claim within six months after **Substantial Completion** pursuant to Article 56.

ARTICLE 12. COORDINATION WITH OTHER CONTRACTORS

12.1 During the progress of the **Work**, **Other Contractors** may be engaged in performing other work or may be awarded other contracts for additional work on this **Project**. In that event, the **Contractor** shall coordinate the **Work** to be done hereunder with the work of such **Other Contractors** and the **Contractor** shall fully cooperate with such **Other Contractors** and carefully fit its own **Work** to that provided under other contracts as may be directed by the **Engineer**. The **Contractor** shall not commit or permit any act which will interfere with the performance of work by any **Other Contractors**.

12.2 If the **Engineer** determines that the **Contractor** is failing to coordinate its **Work** with the work of **Other Contractors** as the **Engineer** has directed, then the **Commissioner** shall have the right to withhold any payments otherwise due hereunder until the **Contractor** completely complies with the **Engineer's** directions.

12.3 The **Contractor** shall notify the **Engineer** in writing if any **Other Contractor** on this **Project** is failing to coordinate its work with the **Work** of this **Contract**. If the **Engineer** finds such charges to be true, the **Engineer** shall promptly issue such directions to the **Other Contractor** with respect thereto as the situation may require. The **City** shall not, however, be liable for any damages suffered by any **Other Contractor's** failure to coordinate its work with the **Work** of this **Contract** or by reason of the **Other Contractor's** failure to promptly comply with the directions so issued by the **Engineer**, or by reason of any **Other Contractor's** default in performance, it being understood that the **City** does not guarantee the responsibility or continued efficiency of any contractor. The **Contractor** agrees to make no claim against the **City** for any damages relating to or arising out of any directions issued by the **Engineer** pursuant to this Article 12 (including but not limited to the failure of any **Other Contractor** to comply or promptly comply with such directions), or the failure of any **Other Contractor** to coordinate its work, or the default in performance of any **Other Contractor**.

12.4 The **Contractor** shall indemnify and hold the **City** harmless from any and all claims or judgments for damages and from costs and expenses to which the **City** may be subjected or which it may suffer or incur by reason of the **Contractor's** failure to comply with the **Engineer's** directions promptly; and the **Comptroller** shall have the right to exercise the powers reserved in Article 23 with respect to any claims which may be made for damages due to the **Contractor's** failure to comply with the **Engineer's** directions promptly. Insofar as the facts and **Law** relating to any claim would preclude the **City** from being completely indemnified by the **Contractor**, the **City** shall be partially indemnified by the **Contractor** to the fullest extent provided by **Law**.

12.5 Should the **Contractor** sustain any damage through any act or omission of any **Other Contractor** having a contract with the **City** for the performance of work upon the **Site** or of work which may be necessary to be performed for the proper prosecution of the **Work** to be performed hereunder, or through any act or omission of a subcontractor of such **Other Contractor**, the **Contractor** shall have no claim against the **City** for such damage, but shall have a right to recover such damage from the **Other**
12.5 **Contractor** under the provision similar to the following provisions which apply to this Contract and have been or will be inserted in the contracts with such Other Contractors:

> 12.5.1 Should any **Other Contractor** having or who shall hereafter have a contract with the **City** for the performance of work upon the **Site** sustain any damage through any act or omission of the **Contractor** hereunder or through any act or omission of any **Subcontractor** of the **Contractor**, the **Contractor** agrees to reimburse such **Other Contractor** for all such damages and to defend at its own expense any action based upon such claim and if any judgment or claim (even if the allegations of the action are without merit) against the **City** shall be allowed the **Contractor** shall pay or satisfy such judgment or claim and pay all costs and expenses in connection therewith and agrees to indemnify and hold the **City** harmless from all such claims. Insofar as the facts and **Law** relating to any claim would preclude the **City** from being completely indemnified by the **Contractor**, the **City** shall be partially indemnified by the **Contractor** to the fullest extent provided by **Law**.

12.6 The **City's** right to indemnification hereunder shall in no way be diminished, waived or discharged by its recourse to assessment of liquidated damages as provided in Article 15, or by the exercise of any other remedy provided for by **Contract** or by **Law**.

ARTICLE 13. EXTENSION OF TIME FOR PERFORMANCE

13.1 If performance by the **Contractor** is delayed for a reason set forth in Article 13.3, the **Contractor** may be allowed a reasonable extension of time in conformance with this Article 13 and the **PPB**

Rules.

13.2 Any extension of time may be granted only by the **ACCO** or by the Board for the Extension of Time (hereafter "Board") (as set forth below) upon written application by the **Contractor**.

13.3 Grounds for Extension: If such application is made, the **Contractor** shall be entitled to an extension of time for delay in completion of the **Work** caused solely:

13.3.1 By the acts or omissions of the **City**, its officials, agents or employees; or

13.3.2 By the act or omissions of **Other Contractors** on this **Project**; or

13.3.3 By supervening conditions entirely beyond the control of either party hereto (such as, but not limited to, acts of God or the public enemy, excessive inclement weather, war or other national emergency making performance temporarily impossible or illegal, or strikes or labor disputes not brought about by any act or omission of the **Contractor**).

13.3.4 The **Contractor** shall, however, be entitled to an extension of time for such causes only for the number of **Days** of delay which the **ACCO** or the Board may determine to be due solely to such causes, and then only if the **Contractor** shall have strictly complied with all of the requirements of Articles 9 and 10.

13.4 The **Contractor** shall not be entitled to receive a separate extension of time for each of several causes of delay operating concurrently, but, if at all, only for the actual period of delay in completion of the **Work** as determined by the **ACCO** or the Board, irrespective of the number of causes contributing to produce such delay. If one of several causes of delay operating concurrently results from any act, fault or omission of the **Contractor** or of its **Subcontractors** or **Materialmen**, and would of itself (irrespective of the concurrent causes) have delayed the **Work**, no extension of time will be allowed for the period ofdelay resulting from such act, fault or omission.

13.5 The determination made by the **ACCO** or the Board on an application for an extension of time shall be binding and conclusive on the **Contractor**.

13.6 The **ACCO** or the Board acting entirely within their discretion may grant an application for an extension of time for causes of delay other than those herein referred.

13.7 Permitting the **Contractor** to continue with the **Work** after the time fixed for its completion has expired, or after the time to which such completion may have been extended has expired, or the making of any payment to the **Contractor** after such time, shall in no way operate as a waiver on the part of the **City** of any of its rights under this **Contract**.

13.8 Application for Extension of Time:

13.8.1 Before the **Contractor's** time extension request will be considered, the **Contractor** shall notify the **ACCO** of the condition which allegedly has caused or is causing the delay, and shall submit a written application to the **ACCO** identifying:

13.8.1(a) The **Contractor**; the registration number; and **Project** description;

13.8.1(b) Liquidated damage assessment rate, as specified in the **Contract**;

13.8.1(c) Original total bid price;

13.8.1(d) The original **Contract** start date and completion date;

13.8.1(e) Any previous time extensions granted (number and duration); and

13.8.1(f) The extension of time requested.

13.8.2 In addition, the application for extension of time shall set forth in detail:

13.8.2(a) The nature of each alleged cause of delay in completing the **Work**;

13.8.2(b) The date upon which each such cause of delay began and ended and the number of **Days** attributable to each such cause;

13.8.2(c) A statement that the **Contractor** waives all claims except for those delineated in the application, and the particulars of any claims which the **Contractor** does not agree to waive. For time extensions for **Substantial Completion** and final completion payments, the application shall include a detailed statement of the dollar amounts of each element of claim item reserved; and

13.8.2(d) A statement indicating the **Contractor's** understanding that the time extension is granted only for purposes of permitting continuation of **Contract** performance and payment for **Work** performed and that the **City** retains its right to conduct an investigation and assess liquidated damages as appropriate in the future.

13.9 Analysis and Approval of Time Extensions:

13.9.1 For time extensions for partial payments, a written determination shall be made by the **ACCO** who may, for good and sufficient cause, extend the time for the performance of the **Contract** as follows:

13.9.1(a) If the **Work** is to be completed within six (6) months, the time for performance may be extended for sixty (60) **Days**;

13.9.1(b) If the **Work** is to be completed within less than one (1) year but more than six (6) months, an extension of ninety (90) **Days** may be granted;

13.9.1(c) If the **Contract** period exceeds one (1) year, besides the extension granted in Article 13.9.1(b), an additional thirty (30) **Days** may be granted for each multipleof six (6) months involved beyond the one (1) year period; or

13.9.1(d) If exceptional circumstances exist, the **ACCO** may extend the time for performance beyond the extensions in Articles 13.9.1(a), 13.9.1(b), and 13.9.1(c). In that event, the **ACCO** shall file with the Mayor's Office of Contract Services a written explanation of the exceptional circumstances.

13.9.2 For extensions of time for **Substantial Completion** and final completion payments, the **Engineer**, in consultation with the **ACCO**, shall prepare a written analysis of the delay (including a preliminary determination of the causes of delay, the beginning and end dates for each such cause of delay, and whether the delays are excusable under the terms of this **Contract**). The report shall be subject to review by and approval of the Board, which shall have authority to question its analysis and determinations and request additional facts or documentation. The report as reviewed and made final by the Board shall be made a part of the **Agency** contract file. Neither the report itself nor anything contained therein shall operate as a

waiver or release of any claim the **City** may have against the **Contractor** for either actual or liquidated damages.

13.9.3 Approval Mechanism for Time Extensions for **Substantial Completion** or Final Completion Payments: An extension shall be granted only with the approval of the Board which is comprised of the **ACCO** of the **Agency**, the **City** Corporation Counsel, and the **Comptroller**, or their authorized representatives.

13.9.4 Neither the granting of any application for an extension of time to the **Contractor** or any **Other Contractor** on this **Project** nor the papers, records or reports related to any application for or grant of an extension of time or determination related thereto shall be referred to or offered in evidence by the **Contractor** or its attorneys in any action or proceeding.

13.10 No Damage for Delay: The **Contractor** agrees to make no claim for damages for delay in the performance of this **Contract** occasioned by any act or omission to act of the **City** or any of its representatives, except as provided for in Article 11.

ARTICLE 14. COMPLETION AND FINAL ACCEPTANCE OF THE WORK

14.1 Date for **Substantial Completion**: The **Contractor** shall substantially complete the **Work** within the time fixed in Schedule A of the General Conditions, or within the time to which such **Substantial Completion** may be extended.

14.2 Determining the Date of **Substantial Completion**: The **Work** will be deemed to be substantially complete when the two conditions set forth below have been met.

14.2.1 Inspection: The **Engineer** or **Resident Engineer**, as applicable, has inspected the **Work** and has made a written determination that it is substantially complete.

14.2.2 Approval of **Final Approved Punch List** and Date for **Final Acceptance**: Following inspection of the **Work**, the **Engineer/Resident Engineer** shall furnish the **Contractor** with a final punch list, specifying all items of **Work** to be completed and proposing dates for the completion of each specified item of **Work**. The **Contractor** shall then submit in writing to the **Engineer/Resident Engineer** within ten (10) **Days** of the **Engineer/Resident Engineer** furnishing the final punch list either acceptance of the dates or proposed alternative dates for the completion of each specified item of **Work**. If the **Contractor** neither accepts the dates nor proposes alternative dates within ten (10) **Days**, the schedule proposed by the **Engineer/Resident Engineer** shall be deemed accepted. If the **Contractor** proposes alternative dates, then, within a reasonable time after receipt, the **Engineer/Resident Engineer**, in a written notification to the **Contractor**, shall approve the **Contractor's** completion dates or, if they are unable to agree, the **Engineer/Resident Engineer** shall establish dates for the completion of each item of **Work**. The latest completion date specified shall be the date for **Final Acceptance** of the **Work**.

14.3 Date of **Substantial Completion**. The date of approval of the **Final Approved Punch List**, shall be the date of **Substantial Completion**. The date of approval of the **Final Approved Punch List** shall be either (a) if the **Contractor** approves the final punch list and proposed dates for completion furnished by the **Engineer/Resident Engineer**, the date of the **Contractor**'s approval; or (b) if the **Contractor** neither accepts the dates nor proposes alternative dates, ten (10) **Days** after the **Engineer/Resident Engineer** furnishes the **Contractor** with a final punch list and proposed dates for completion; or (c) if the **Contractor** proposes alternative dates, the date that the **Engineer/Resident Engineer** sends written notification to the

Contractor either approving the **Contractor**'s proposed alternative dates or establishing dates for the completion for each item of **Work**.

14.4 Determining the Date of **Final Acceptance**: The **Work** will be accepted as final and complete as of the date of the **Engineer**'s/**Resident Engineer**'s inspection if, upon such inspection, the **Engineer/Resident Engineer** finds that all items on the **Final Approved Punch List** are complete andno further **Work** remains to be done. The **Commissioner** will then issue a written determination of **Final Acceptance**.

14.5 Request for Inspection: Inspection of the **Work** by the **Engineer/Resident Engineer** for the purpose of **Substantial Completion** or **Final Acceptance** shall be made within fourteen (14) **Days** after receipt of the **Contractor's** written request therefor.

14.6 Request for Re-inspection: If upon inspection for the purpose of **Substantial Completion** or **Final Acceptance**, the **Engineer/Resident Engineer** determines that there are items of **Work** still to be performed, the **Contractor** shall promptly perform them and then request a re-inspection. If upon re-inspection, the **Engineer/Resident Engineer** determines that the **Work** is substantially complete or finally accepted, the date of such re-inspection shall be the date of **Substantial Completion** or **Final Acceptance**. Re-inspection by the **Engineer/Resident Engineer** shall be made within ten (10) **Days** after receipt of the **Contractor's** written request therefor.

14.7 Initiation of Inspection by the **Engineer/Resident Engineer**: If the **Contractor** does not request inspection or re-inspection of the **Work** for the purpose of **Substantial Completion** or **Final Acceptance**, the **Engineer/Resident Engineer** may initiate such inspection or re-inspection.

ARTICLE 15. LIQUIDATED DAMAGES

15.1 In the event the **Contractor** fails to substantially complete the **Work** within the time fixed for such **Substantial Completion** in Schedule A of the General Conditions, plus authorized time extensions, or if the **Contractor**, in the sole determination of the **Commissioner**, has abandoned the **Work**, the **Contractor** shall pay to the **City** the sum fixed in Schedule A of the General Conditions, for each and every **Day** that the time consumed in substantially completing the **Work** exceeds the time allowed therefor; which said sum, in view of the difficulty of accurately ascertaining the loss which the **City** will suffer by reason of delay in the **Substantial Completion** of the **Work** hereunder, is hereby fixed and agreed as the liquidated damages that the **City** will suffer by reason of such delay, and not as a penalty. This Article 15 shall also apply to the **Contractor** whether or not the **Contractor** is defaulted pursuant to Chapter X of this **Contract**. Neither the failure to assess liquidated damages nor the granting of any time extension shall operate as a waiver or release of any claim the **City** may have against the **Contractor** for either actual or liquidated damages.

15.2 Liquidated damages received hereunder are not intended to be nor shall they be treated as either a partial or full waiver or discharge of the **City's** right to indemnification, or the **Contractor's** obligation to indemnify the **City**, or to any other remedy provided for in this **Contract** or by **Law**.

15.3 The **Commissioner** may deduct and retain out of the monies which may become due hereunder, the amount of any such liquidated damages; and in case the amount which may become due hereunder shall be less than the amount of liquidated damages suffered by the **City**, the **Contractor** shall be liable to pay the difference.

ARTICLE 16. OCCUPATION OR USE PRIOR TO COMPLETION

16.1 Unless otherwise provided for in the **Specifications**, the **Commissioner** may take over, use, occupy or operate any part of the **Work** at any time prior to **Final Acceptance**, upon written notification to the **Contractor**. The **Engineer** or **Resident Engineer**, as applicable, shall inspect the part of the**Work** to be taken over, used, occupied, or operated, and will furnish the **Contractor** with a written statement of the **Work**, if any, which remains to be performed on such part. The **Contractor** shall not object to, nor interfere with, the **Commissioner's** decision to exercise the rights granted by Article 16. In the event the **Commissioner** takes over, uses, occupies, or operates any part of the **Work:**

16.1.1 the **Engineer/Resident Engineer** shall issue a written determination of **Substantial Completion** with respect to such part of the **Work**;

16.1.2 the **Contractor** shall be relieved of its absolute obligation to protect such part of the unfinished **Work** in accordance with Article 7;

16.1.3 the **Contractor's** guarantee on such part of the **Work** shall begin on the date of such use by the **City**; and;

16.1.4 the **Contractor** shall be entitled to a return of so much of the amount retained in accordance with Article 21 as it relates to such part of the **Work**, except so much thereof as may be retained under Articles 24 and 44.

CHAPTER IV: SUBCONTRACTS AND ASSIGNMENTS

ARTICLE 17. SUBCONTRACTS

17.1 The **Contractor** shall not make subcontracts totaling an amount more than the percentage of the total **Contract** price fixed in Schedule A of the General Conditions, without prior written permission from the **Commissioner**. All subcontracts made by the **Contractor** shall be in writing. No **Work** may be performed by a **Subcontractor** prior to the **Contractor** entering into a written subcontract with the **Subcontractor** and complying with the provisions of this Article 17.

17.2 Before making any subcontracts, the **Contractor** shall submit a written statement to the **Commissioner** giving the name and address of the proposed **Subcontractor**; the portion of the **Work** and materials which it is to perform and furnish; the cost of the subcontract; the VENDEX questionnaire if required; the proposed subcontract if requested by the **Commissioner**; and any other information tending to prove that the proposed **Subcontractor** has the necessary facilities, skill, integrity, past experience, and financial resources to perform the **Work** in accordance with the terms and conditions of this **Contract**.

17.3 In addition to the requirements in Article 17.2, **Contractor** is required to list the **Subcontractor** in the web based Subcontractor Reporting System through the City's Payee Information Portal (PIP), available at www.nyc.gov/pip.[1]For each **Subcontractor** listed, **Contractor** is required to provide the following information: maximum contract value, description of **Subcontractor's** Work, start and end date of the subcontract and identification of the **Subcontractor**'s industry. Thereafter, **Contractor** will be required to report in the system the payments made to each **Subcontractor** within 30 days of making the

[1] In order to use the new system, a PIP account will be required. Detailed instructions on creating a PIP account and using the new system are also available at www.nyc.gov/pip. Additional assistance with PIP may be obtained by emailing the Financial Information Services Agency Help Desk at pip@fisa.nyc.gov.

payment. If any of the required information changes throughout the Term of the **Contract**, **Contractor** will be required to revise the information in the system.

Failure of the **Contractor** to list a **Subcontractor** and/or to report **Subcontractor** payments in a timely fashion may result in the **Commissioner** declaring the **Contractor** in default of the **Contract** and will subject **Contractor** to liquidated damages in the amount of $100 per day for each day that the **Contractor** fails to identify a **Subcontractor** along with the required information about the **Subcontractor** and/or fails to report payments to a **Subcontractor**, beyond the time frames set forth herein or in the notice from the **City**. Article 15 shall govern the issue of liquidated damages.

17.4 If an approved **Subcontractor** elects to subcontract any portion of its subcontract, the proposed sub-subcontract shall be submitted in the same manner as directed above.

17.5 The **Commissioner** will notify the **Contractor** in writing whether the proposed **Subcontractor** is approved. If the proposed **Subcontractor** is not approved, the **Contractor** may submit another proposed **Subcontractor** unless the **Contractor** decides to do the **Work**. No **Subcontractor** shall be permitted to enter or perform any work on the **Site** unless approved.

17.6 Before entering into any subcontract hereunder, the **Contractor** shall provide the proposed **Subcontractor** with a complete copy of this document and inform the proposed **Subcontractor** fully and completely of all provisions and requirements of this **Contract** relating either directly or indirectly to the **Work** to be performed and the materials to be furnished under such subcontract, and every such **Subcontractor** shall expressly stipulate that all labor performed and materials furnished by the **Subcontractor** shall strictly comply with the requirements of this **Contract.**

17.7 Documents given to a prospective **Subcontractor** for the purpose of soliciting the **Subcontractor's** bid shall include either a copy of the bid cover or a separate information sheet setting forth the **Project** name, the **Contract** number (if available), the **Agency** (as noted in Article 2.1.6), and the **Project's** location.

17.8 The **Commissioner's** approval of a **Subcontractor** shall not relieve the **Contractor** of any of its responsibilities, duties, and liabilities hereunder. The **Contractor** shall be solely responsible to the **City** for the acts or defaults of its **Subcontractor** and of such **Subcontractor's** officers, agents, and employees, each of whom shall, for this purpose, be deemed to be the agent or employee of the **Contractor** to the extent of its subcontract.

17.9 If the **Subcontractor** fails to maintain the necessary facilities, skill, integrity, past experience, and financial resources (other than due to the **Contractor's** failure to make payments where required) to perform the **Work** in accordance with the terms and conditions of this **Contract**, the **Contractor** shall promptly notify the **Commissioner** and replace such **Subcontractor** with a newly approved **Subcontractor** in accordance with this Article 17.

17.10 The **Contractor** shall be responsible for ensuring that all **Subcontractors** performing **Work** at the **Site** maintain all insurance required by **Law**.

17.11 The **Contractor** shall promptly, upon request, file with the **Engineer** a conformed copy ofthe subcontract and its cost. The subcontract shall provide the following:

17.11.1 Payment to **Subcontractors**: The agreement between the **Contractor** and its **Subcontractor** shall contain the same terms and conditions as to method of payment for **Work**, labor, and materials, and as to retained percentages, as are contained in this **Contract**.

17.11.2 Prevailing Rate of Wages: The agreement between the **Contractor** and its **Subcontractor** shall include the prevailing wage rates and supplemental benefits to be paid in accordance with Labor Law Section 220.

17.11.3 Section 6-123 of the Administrative Code: Pursuant to the requirements of Section 6-123 of the Administrative Code, every agreement between the **Contractor** and a **Subcontractor** in excess of fifty thousand ($50,000) dollars shall include a provision that the **Subcontractor** shall not engage in any unlawful discriminatory practice as defined in Title VIII of the Administrative Code (Section 8-101 *et seq*.).

17.11.4 All requirements required pursuant to federal and/or state grant agreement(s), if applicable to the **Work**.

17.12 The **Commissioner** may deduct from the amounts certified under this **Contract** to be due to the **Contractor**, the sum or sums due and owing from the **Contractor** to the **Subcontractors** according to the terms of the said subcontracts, and in case of dispute between the **Contractor** and its **Subcontractor**, or **Subcontractors**, as to the amount due and owing, the **Commissioner** may deduct and withhold from the amounts certified under this **Contract** to be due to the **Contractor** such sum or sums as may be claimed by such **Subcontractor**, or **Subcontractors**, in a sworn affidavit, to be due and owing until such time as such claim or claims shall have been finally resolved.

17.13 On contracts where performance bonds and payment bonds are executed, the **Contractor** shall include on each requisition for payment the following data: **Subcontractor's** name, value of the subcontract, total amount previously paid to **Subcontractor** for **Work** previously requisitioned, and the amount, including retainage, to be paid to the **Subcontractor** for **Work** included in the requisition.

17.14 On **Contracts** where performance bonds and payment bonds are not executed, the **Contractor** shall include with each requisition for payment submitted hereunder, a signed statement from each and every **Subcontractor** and/or **Materialman** for whom payment is requested in such requisition. Such signed statement shall be on the letterhead of the **Subcontractor** and/or **Materialman** for whom payment is requested and shall (i) verify that such **Subcontractor** and/or **Materialman** has been paid in full for all **Work** performed and/or material supplied to date, exclusive of any amount retained and any amount included on the current requisition, and (ii) state the total amount of retainage to date, exclusive of any amount retained on the current requisition.

ARTICLE 18. ASSIGNMENTS

18.1 The **Contractor** shall not assign, transfer, convey or otherwise dispose of this **Contract**, or the right to execute it, or the right, title or interest in or to it or any part thereof, or assign, by power of attorney or otherwise any of the monies due or to become due under this **Contract**, unless the previous written consent of the **Commissioner** shall first be obtained thereto, and the giving of any such consent to a particular assignment shall not dispense with the necessity of such consent to any further or other assignments.

18.2 Such assignment, transfer, conveyance or other disposition of this **Contract** shall not be valid until filed in the office of the **Commissioner** and the **Comptroller**, with the written consent of the **Commissioner** endorsed thereon or attached thereto.

18.3 Failure to obtain the previous written consent of the **Commissioner** to such an assignment,

transfer, conveyance or other disposition, may result in the revocation and annulment of this **Contract**. The **City** shall thereupon be relieved and discharged from any further liability to the **Contractor**, its assignees, transferees or sublessees, who shall forfeit and lose all monies therefor earned under the **Contract**, except so much as may be required to pay the **Contractor's** employees.

18.4 The provisions of this clause shall not hinder, prevent, or affect an assignment by the **Contractor** for the benefit of its creditors made pursuant to the **Laws** of the State of New York.

18.5 This **Contract** may be assigned by the **City** to any corporation, agency or instrumentality having authority to accept such assignment.

CHAPTER V: CONTRACTOR'S SECURITY AND GUARANTEE

ARTICLE 19. SECURITY DEPOSIT

19.1 If performance and payment bonds are required, the **City** shall retain the bid security to ensure that the successful bidder executes the **Contract** and furnishes the required payment and performance security within ten (10) **Days** after notice of the award of the **Contract**. If the successful bidder fails to execute the **Contract** and furnish the required payment and performance security, the **City** shall retain such bid security as set forth in the Information for Bidders. If the successful bidder executes the **Contract** and furnishes the required payment and performance security, the **City** shall return the bid security within a reasonable time after the furnishing of such bonds and execution of the **Contract** by the **City**.

19.2 If performance and payment bonds are not required, the bid security shall be retained by the **City** as security for the **Contractor**'s faithful performance of the **Contract**. If partial payments are provided, the bid security will be returned to the **Contractor** after the sum retained under Article 21 equals the amount of the bid security, subject to other provisions of this **Contract**. If partial payments are not provided, the bid security will be released when final payment is certified by the **City** for payment.

19.3 If the **Contractor** is declared in default under Article 48 prior to the return of the deposit, or if any claim is made such as referred to in Article 23, the amount of such deposit, or so much thereof as the **Comptroller** may deem necessary, may be retained and then applied by the **Comptroller**:

19.3.1 To compensate the **City** for any expense, loss or damage suffered or incurred by reason of or resulting from such default, including the cost of re-letting and liquidated damages; or

19.3.2 To indemnify the **City** against any and all claims.

ARTICLE 20. PAYMENT GUARANTEE

20.1 On **Contracts** where one hundred (100%) percent performance bonds and payment bonds are executed, this Article 20 does not apply.

20.2 In the event the terms of this **Contract** do not require the **Contractor** to provide a payment bond or where the **Contract** does not require a payment bond for one hundred (100%) percent of the **Contract** price, the **City** shall, in accordance with the terms of this Article 20, guarantee payment of all lawful claims for:

20.2.1 Wages and compensation for labor performed and/or services rendered; and

20.2.2 Materials, equipment, and supplies provided, whether incorporated into the **Work** or not, when demands have been filed with the **City** as provided hereinafter by any person, firm, or corporation which furnished labor, material, equipment, supplies, or any combination thereof, in connection with the **Work** performed hereunder (hereinafter referred to as the "beneficiary") at the direction of the **City** or the **Contractor**.

20.3 The provisions of Article 20.2 are subject to the following limitations and conditions:

20.3.1 If the **Contractor** provides a payment bond for a value that is less than one hundred (100%) percent of the value of the **Contract Work**, the payment bond provided by the **Contractor** shall be primary (and non-contributing) to the payment guarantee provided under this Article 20.

20.3.2 The guarantee is made for the benefit of all beneficiaries as defined in Article 20.2 provided that those beneficiaries strictly adhere to the terms and conditions of Article 20.3.4 and 20.3.5.

20.3.3 Nothing in this Article 20 shall prevent a beneficiary providing labor, services or material for the **Work** from suing the **Contractor** for any amounts due and owing the beneficiary by the **Contractor**.

20.3.4 Every person who has furnished labor or material, to the **Contractor** or to a **Subcontractor** of the **Contractor**, in the prosecution of the **Work** and who has not been paid in full therefor before the expiration of a period of ninety (90) **Days** after the date on which the last of the labor was performed or material was furnished by him/her for which the claim is made, shall have the right to sue on this payment guarantee in his/her own name for the amount, or the balance thereof, unpaid at the time of commencement of the action; provided, however, that a person having a direct contractual relationship with a **Subcontractor** of the **Contractor** but no contractual relationship express or implied with the **Contractor** shall not have a right of action upon the guarantee unless he/she shall have given written notice to the **Contractor** within one hundred twenty (120) **Days** from the date on which the last of the labor was performed or the last of the material was furnished, for which his/her claim is made, stating with substantial accuracy the amount claimed and the name of the party to whom the material was furnished or for whom the labor was performed. The notice shall be served by delivering the same personally to the **Contractor** or by mailing the same by registered mail, postage prepaid, in an envelope addressed to the **Contractor** at any place where it maintains an office or conducts its business; provided, however, that where such notice is actually received by the **Contractor** by other means, such notice shall be deemed sufficient.

20.3.5 Except as provided in Labor Law Section 220-g, no action on this payment guarantee shall be commenced after the expiration of the one-year limitations period set forth in Section 137(4)(b) of the State Finance Law.

20.3.6 The **Contractor** shall promptly forward to the **City** any notice or demand received pursuant to Article 20.3.4. The **Contractor** shall inform the **City** of any defenses to the notice or demand and shall forward to the **City** any documents the **City** requests concerning the notice or demand.

20.3.7 All demands made against the **City** by a beneficiary of this payment guarantee shall be presented to the **Engineer** along with all written documentation concerning the demand which the **Engineer** deems reasonably appropriate or necessary, which may include, but shall not be

limited to: the subcontract; any invoices presented to the **Contractor** for payment; the notarized statement of the beneficiary that the demand is due and payable, that a request for payment has been made of the **Contractor** and that the demand has not been paid by the **Contractor** within the time allowed for such payment by the subcontract; and copies of any correspondence between the beneficiary and the **Contractor** concerning such demand. The **City** shall notify the **Contractor** that a demand has been made. The **Contractor** shall inform the **City** of any defenses to the demand and shall forward to the **City** any documents the **City** requests concerning the demand.

20.3.8 The **City** shall make payment only if, after considering all defenses presented by the **Contractor**, it determines that the payment is due and owing to the beneficiary making the demand.

20.3.9 No beneficiary shall be entitled to interest from the **City**, or to any other costs, including, but not limited to, attorneys' fees, except to the extent required by State Finance Law Section 137.

20.3.10

20.4 Upon the receipt by the **City** of a demand pursuant to this Article 20, the **City** may withhold from any payment otherwise due and owing to the **Contractor** under this **Contract** an amount sufficient to satisfy the demand.

20.4.1 In the event the **City** determines that the demand is valid, the **City** shall notify the **Contractor** of such determination and the amount thereof and direct the **Contractor** to immediately pay such amount to the beneficiary. In the event the **Contractor**, within seven (7) **Days** of receipt of such notification from the **City**, fails to pay the beneficiary, such failure shall constitute an automatic and irrevocable assignment of payment by the **Contractor** to the beneficiary for the amount of the demand determined by the **City** to be valid. The **Contractor**, without further notification or other process, hereby gives its unconditional consent to such assignment of payment to the beneficiary and authorizes the **City**, on its behalf, to take all necessary actions to implement such assignment of payment, including without limitation the execution of any instrument or documentation necessary to effectuate such assignment.

20.4.2 In the event that the amount otherwise due and owing to the **Contractor** by the **City** is insufficient to satisfy such demand, the **City** may, at its option, require payment from the **Contractor** of an amount sufficient to cover such demand and exercise any other right to require or recover payment which the **City** may have under **Law** or **Contract**.

20.4.3 In the event the **City** determines that the demand is invalid, any amount withheld pending the **City**'s review of such demand shall be paid to the **Contractor**; provided, however, no lien has been filed. In the event a claim or an action has been filed, the terms and conditions set forth in Article 23 shall apply. In the event a lien has been filed, the parties will be governed by the provisions of the Lien Law of the State of New York.

20.5 The provisions of this Article 20 shall not prevent the **City** and the **Contractor** from resolving disputes in accordance with the **PPB** Rules, where applicable.

20.6 In the event the **City** determines that the beneficiary is entitled to payment pursuant to this Article 20, such determination and any defenses and counterclaims raised by the **Contractor** shall be taken into account in evaluating the **Contractor's** performance.

20.7 Nothing in this Article 20 shall relieve the **Contractor** of the obligation to pay the claims of all

persons with valid and lawful claims against the **Contractor** relating to the **Work**.

20.8 The **Contractor** shall not require any performance, payment or other bonds of any **Subcontractor** if this **Contract** does not require such bonds of the **Contractor**.

20.9 The payment guarantee made pursuant to this Article 20 shall be construed in a manner consistent with Section 137 of the State Finance Law and shall afford to persons furnishing labor or materials to the **Contractor** or its **Subcontractors** in the prosecution of the **Work** under this **Contract** all of the rights and remedies afforded to such persons by such section, including but not limited to, the right to commence an action against the **City** on the payment guarantee provided by this Article 20 within the one-year limitations period set forth in Section 137(4)(b).

ARTICLE 21. RETAINED PERCENTAGE

21.1 If this **Contract** requires one hundred (100%) percent performance and payment security, then as further security for the faithful performance of this **Contract**, the **Commissioner** shall deduct, and retain until the substantial completion of the **Work**, five (5%) percent of the value of **Work** certified for payment in each partial payment voucher.

21.2 If this **Contract** does not require one hundred (100%) percent performance and payment security and if the price for which this **Contract** was awarded does not exceed one million ($1,000,000) dollars, then as further security for the faithful performance of this **Contract**, the **Commissioner** shall deduct, and retain until the substantial completion of the **Work**, five (5%) percent of the value of **Work** certified for payment in each partial payment voucher.

21.3 If this **Contract** does not require one hundred (100%) percent performance and payment security and if the price for which this **Contract** was awarded exceeds one million ($1,000,000) dollars, then as further security for the faithful performance of this **Contract,** the **Commissioner** shall deduct, and retain until the substantial completion of the **Work**, up to ten (10%) percent of the value of **Work** certified for payment in each partial payment voucher. The percentage to be retained is set forth in Schedule A of the General Conditions.

ARTICLE 22. INSURANCE

22.1 Types of Insurance: The **Contractor** shall procure and maintain the following types of insurance if, and as indicated, in Schedule A of the General Conditions (with the minimum limits and special conditions specified in Schedule A). Such insurance shall be maintained from the date the **Contractor** is required to provide Proof of Insurance pursuant to Article 22.3.1 through the date of completion of all required **Work** (including punch list work as certified in writing by the **Resident Engineer**), except for insurance required pursuant to Article 22.1.4, which may terminate upon **Substantial Completion** of the **Contract**. All insurance shall meet the requirements set forth in this Article 22. Wherever this Article requires that insurance coverage be "at least as broad" as a specified form (including all ISO forms), there is no obligation that the form itself be used, provided that the **Contractor** can demonstrate that the alternative form or endorsement contained in its policy provides coverage at least as broad as the specified form.

22.1.1 Commercial General Liability Insurance: The **Contractor** shall provide Commercial General Liability Insurance covering claims for property damage and/or bodily injury, including death, which may arise from any of the operations under this **Contract**. Coverage under this insurance shall be at least as broad as that provided by the latest edition of Insurance

Services Office ("ISO") Form CG 0001. Such insurance shall be "occurrence" based rather than "claims-made" and include, without limitation, the following types of coverage: premises operations; products and completed operations; contractual liability (including the tort liability of another assumed in a contract); broad form property damage; independent contractors; explosion, collapse and underground (XCU); construction means and methods; and incidental malpractice. Such insurance shall contain a "per project" aggregate limit, as specified in Schedule A, that applies separately to operations under this **Contract**.

22.1.1(a) Such Commercial General Liability Insurance shall name the **City** as an Additional Insured. Coverage for the City shall specifically include the **City's** officials and employees, be at least as broad as the latest edition of ISO Form CG 20 10 and provide completed operations coverage at least as broad as the latest edition of ISO Form CG 20 37.

22.1.1(b) Such Commercial General Liability Insurance shall name all other entities designated as additional insureds in Schedule A but only for claims arising from the **Contractor's** operations under this **Contract**, with coverage at least as broad as the latest edition of ISO Form CG 20 26.

22.1.1(c) If the **Work** requires a permit from the Department of Buildings pursuant to 1 RCNY Section 101-08, the **Contractor** shall provide Commercial General Liability Insurance with limits of at least those required by 1 RCNY section 101-08 or greater limits required by the Agency in accordance with Schedule A. If the **Work** does not require such a permit, the minimum limits shall be those provided for in Schedule A.

22.1.1(d) If any of the **Work** includes repair of a waterborne vessel owned by or to be delivered to the **City**, such Commercial General Liability shall include, or be endorsed to include, Ship Repairer's Legal Liability Coverage to protect against, without limitation, liability arising from navigation of such vessels prior to delivery to and acceptance by the **City**.

22.1.2 Workers' Compensation Insurance, Employers' Liability Insurance, and Disability Benefits Insurance: The **Contractor** shall provide, and shall cause its **Subcontractors** to provide, Workers Compensation Insurance, Employers' Liability Insurance, and Disability Benefits Insurance in accordance with the **Laws** of the State of New York on behalf of all employees providing services under this **Contract** (except for those employees, if any, for which the **Laws** require insurance only pursuant to Article 22.1.3).

22.1.3 United States Longshoremen's and Harbor Workers Act and/or Jones Act Insurance: If specified in Schedule A of the General Conditions or if required by **Law**, the **Contractor** shall provide insurance in accordance with the United States Longshoremen's and Harbor Workers Act and/or the Jones Act, on behalf of all qualifying employees providing services under this **Contract**.

22.1.4 Builders Risk Insurance: If specified in Schedule A of the General Conditions, the **Contractor** shall provide Builders Risk Insurance on a completed value form for the total value of the **Work** through **Substantial Completion** of the **Work** in its entirety. Such insurance shall be provided on an All Risk basis and include coverage, without limitation, for windstorm (including named windstorm), storm surge, flood and earth movement. Unless waived by the **Commissioner**, it shall include coverage for ordinance and law, demolition and increased costs of construction, debris removal, pollutant clean up and removal, and expediting costs. Such insurance shall cover, without limitation, (a) all buildings and/or structures involved in the

Work, as well as temporary structures at the **Site**, and (b) any property that is intended to become a permanent part of such building or structure, whether such property is on the **Site**, in transit or in temporary storage. Policies shall name the **Contractor** as Named Insured and list the **City** as both an Additional Insuredand a Loss Payee as its interest may appear.

22.1.4(a) Policies of such insurance shall specify that, in the event a loss occurs at an occupied facility, occupancy of such facility is permitted without the consent of the issuing insurance company.

22.1.4(b) Such insurance may be provided through an Installation Floater, at the **Contractor's** option, if it otherwise conforms with the requirements of this Article 22.1.4.

22.1.5 Commercial Automobile Liability Insurance: The **Contractor** shall provide Commercial Automobile Liability Insurance for liability arising out of ownership, maintenance or use of any owned (if any), non-owned and hired vehicles to be used in connection with this **Contract**. Coverage shall be at least as broad as the latest edition of ISO Form CA0001. If vehicles are used for transporting hazardous materials, the Automobile Liability Insurance shall be endorsed to provide pollution liability broadened coverage for covered vehicles (endorsement CA 99 48) as well as proof of MCS 90.

22.1.6 Contractors Pollution Liability Insurance: If specified in Schedule A of the General Conditions, the **Contractor** shall maintain, or cause the **Subcontractor** doing such **Work**to maintain, Contractors Pollution Liability Insurance covering bodily injury and property damage. Such insurance shall provide coverage for actual, alleged or threatened emission, discharge, dispersal, seepage, release or escape of pollutants (including asbestos), including any loss, cost or expense incurred as a result of any cleanup of pollutants (including asbestos) or in the investigation, settlement or defense of any claim, action, or proceedings arising from the operations under this **Contract**. Such insurance shall be in the **Contractor's** name and list the **City** as an Additional Insured and any other entity specified in Schedule A. Coverage shall include, without limitation, (a) loss of use of damaged property or of property that has not been physically injured, (b) transportation, and (c) non- owned disposal sites.

22.1.6(a) Coverage for the **City** as Additional Insured shall specifically include the **City's** officials and employees and be at least as broad as provided to the **Contractor** for this **Project**.

22.1.6(b) If such insurance is written on a claims-made policy, such policy shall have a retroactive date on or before the effective date of this **Contract**, and continuous coverage shall be maintained, or an extended discovery period exercised, for a period of not less than three (3) years from the time the **Work** under this **Contract** is completed.

22.1.7 Marine Insurance:

22.1.7(a) Marine Protection and Indemnity Insurance: If specified in Schedule A of the General Conditions or if the **Contractor** engages in marine operations in the execution of any part of the **Work**, the **Contractor** shall maintain, or cause the**Subcontractor** doing such Work to maintain, Marine Protection and Indemnity Insurance with coverage at least as broad as Form SP-23. The insurance shall provide coverage for the **Contractor** or **Subcontractor** (whichever is doing this **Work**) and for the **City** (together with its officials and employees) and any other entity specified in Schedule A as an Additional Insured for bodily injury and property damage arising from marine operations under this

Contract. Coverage shall include, without limitation, injury or death of crew members (if not fully provided through other insurance), removal of wreck, damage to piers, wharves and other fixed or floating objects and loss of or damage to any other vessel or craft, or to property on such other vessel or craft.

22.1.7(b) Hull and Machinery Insurance: If specified in Schedule A of the General Conditions or if the **Contractor** engages in marine operations in the execution of any part of the **Work**, the **Contractor** shall maintain, or cause the **Subcontractor** doing such **Work** to maintain, Hull and Machinery Insurance with coverage for the **Contractor** or **Subcontractor** (whichever is doing this Work) and for the **City** (together with its officials and employees) as Additional Insured at least as broad as the latest edition of American Institute Tug Form for all tugs used under this **Contract** and Collision Liability at least as broad as the latest edition of American Institute Hull Clauses.

22.1.7(c) Marine Pollution Liability Insurance: If specified in Schedule A of the General Conditions or if the **Contractor** engages in marine operations in the execution of any part of the **Work**, the **Contractor** shall maintain, or cause the **Subcontractor** doing such Work to maintain, Marine Pollution Liability Insurance covering itself (or the Subcontractor doing such Work) as Named Insured and the **City** (together with its officials and employees) and any other entity specified in Schedule A as an Additional Insured. Coverage shall be at least as broad as that provided by the latest edition of Water Quality Insurance Syndicate Form and include, without limitation, liability arising from the discharge or substantial threat of a discharge of oil, or from the release or threatened release of a hazardous substance including injury to, or economic losses resulting from, the destruction of or damage to real property, personal property or natural resources.

22.1.8 The **Contractor** shall provide such other types of insurance, at such minimum limits and with such conditions, as are specified in Schedule A of the General Conditions.

22.2 General Requirements for Insurance Coverage and Policies:

22.2.1 All required insurance policies shall be maintained with companies that may lawfully issue the required policy and have an A.M. Best rating of at least A-/VII or a Standard and Poor's rating of at least A, unless prior written approval is obtained from the **City** Corporation Counsel.

22.2.2 The **Contractor** shall be solely responsible for the payment of all premiums for all required policies and all deductibles and self-insured retentions to which such policies are subject, whether or not the **City** is an insured under the policy.

22.2.3 In his/her sole discretion, the **Commissioner** may, subject to the approval of the **Comptroller** and the **City** Corporation Counsel, accept Letters of Credit and/or custodial accounts in lieu of required insurance.

22.2.4 The **City's** limits of coverage for all types of insurance required pursuant to Schedule A of the General Conditions shall be the greater of (i) the minimum limits set forth in Schedule A or (ii) the limits provided to the **Contractor** as Named Insured under all primary, excess, and umbrella policies of that type of coverage.

22.2.5 The **Contractor** may satisfy its insurance obligations under this Article 22 through primary policies or a combination of primary and excess/umbrella policies, so long as all policies provide the scope of coverage required herein.

22.2.6 Policies of insurance provided pursuant to this Article 22 shall be primary and non-contributing to any insurance or self-insurance maintained by the **City**.

22.3 Proof of Insurance:

22.3.1 For all types of insurance required by Article 22.1 and Schedule A, except for insurance required by Articles 22.1.4 and 22.1.7, the **Contractor** shall file proof of insurance in accordance with this Article 22.3 within ten (10) **Days** of award. For insurance provided pursuant to Articles 22.1.4 and 22.1.7, proof shall be filed by a date specified by the **Commissioner** or ten (10) **Days** prior to the commencement of the portion of the **Work** covered by such policy, whichever is earlier.

22.3.2 For Workers' Compensation Insurance provided pursuant to Article 22.1.2, the **Contractor** shall submit one of the following forms: C-105.2 Certificate of Workers' Compensation Insurance; U-26.3 - State Insurance Fund Certificate of Workers' Compensation Insurance; Request for WC/DB Exemption (Form CE-200); equivalent or successor forms used by the New York State Workers' Compensation Board; or other proof of insurance in a form acceptable to the **Commissioner**. For Disability Benefits Insurance provided pursuant to Article 22.1.2, the Contractor shall submit DB-120.1 - Certificate Of Insurance Coverage Under The NYS Disability Benefits Law, Request for WC/DB Exemption (Form CE-200); equivalent or successor forms used by the New York State Workers' Compensation Board; or other proof of insurance in a form acceptable to the **Commissioner**. ACORD forms are not acceptable.

22.3.3 For policies provided pursuant to all of Article 22.1 other than Article 22.1.2, the **Contractor** shall submit one or more Certificates of Insurance on forms acceptable to the **Commissioner**. All such Certificates of Insurance shall certify (a) the issuance and effectiveness of such policies of insurance, each with the specified minimum limits (b) for insurance secured pursuant to Article 22.1.1 that the **City** and any other entity specified in Schedule A is an Additional Insured thereunder; (c) in the event insurance is required pursuant to Article 22.1.6 and/or Article 22.1.7, that the City is an Additional Insured thereunder; (d) the company code issued to the insurance company by the National Association of Insurance Commissioners (the NAIC number); and (e) the number assigned to the **Contract** by the **City**. All such Certificates of Insurance shall be accompanied by either a duly executed "Certification by Insurance Broker or Agent" in the form contained in Part III of Schedule A or copies of all policies referenced in such Certificate of Insurance as certified by an authorized representative of the issuing insurance carrier. If any policy is not available at the time of submission, certified binders may be submitted until such time as the policy is available, at which time a certified copy of the policy shall be submitted.

22.3.4 Documentation confirming renewals of insurance shall be submitted to the **Commissioner** prior to the expiration date of coverage of policies required under this **Contract**. Such proofs of insurance shall comply with the requirements of Articles 22.3.2 and 22.3.3.

22.3.5 The **Contractor** shall be obligated to provide the **City** with a copy of any policy of insurance provided pursuant to this Article 22 upon the demand for such policy by the **Commissioner** or the **City** Corporation Counsel.

22.4 Operations of the **Contractor**:

22.4.1 The **Contractor** shall not commence the **Work** unless and until all required certificates have been submitted to and accepted by the **Commissioner**. Acceptance by the

Commissioner of a certificate does not excuse the **Contractor** from securing insurance consistent with all provisions of this Article 22 or of any liability arising from its failure todo so.

22.4.2 The **Contractor** shall be responsible for providing continuous insurance coverage in the manner, form, and limits required by this **Contract** and shall be authorized to perform **Work** only during the effective period of all required coverage.

22.4.3 In the event that any of the required insurance policies lapse, are revoked, suspended or otherwise terminated, for whatever cause, the **Contractor** shall immediately stop all **Work**, and shall not recommence **Work** until authorized in writing to do so by the **Commissioner**. Upon quitting the **Site**, except as otherwise directed by the **Commissioner**, the **Contractor** shall leave all plant, materials, equipment, tools, and supplies on the **Site**. **Contract** time shall continue to run during such periods and no extensions of time will be granted. The **Commissioner** may also declare the **Contractor** in default for failure to maintain required insurance.

22.4.4 In the event the **Contractor** receives notice, from an insurance company or other person, that any insurance policy required under this Article 22 shall be cancelled or terminated (or has been cancelled or terminated) for any reason, the **Contractor** shall immediately forward a copy of such notice to both the **Commissioner** and the New York City Comptroller, attn: Office of Contract Administration, Municipal Building, One Centre Street, room 1005, New York, New York 10007. Notwithstanding the foregoing, the**Contractor** shall ensure that there is no interruption in any of the insurance coverage required under this Article 22.

22.4.5 Where notice of loss, damage, occurrence, accident, claim or suit is required under an insurance policy maintained in accordance with this Article 22, the **Contractor** shall notify in writing all insurance carriers that issued potentially responsive policies of any such event relating to any operations under this **Contract** (including notice to Commercial General Liability insurance carriers for events relating to the **Contractor**'s own employees) no later than 20 days after such event. For any policy where the **City** is an Additional Insured, such notice shall expressly specify that "this notice is being given on behalf of the City of New York as Insured as well as the Named Insured." Such notice shall also contain the following information: the number of the insurance policy, the name of the named insured, the date and location of the damage, occurrence, or accident, and the identity of the persons or things injured, damaged or lost. The **Contractor** shall simultaneously send a copy of such notice to the City of New York c/o Insurance Claims Specialist, Affirmative Litigation Division, New York City Law Department, 100 Church Street, New York, New York 10007.

22.4.6 In the event of any loss, accident, claim, action, or other event that does or can give rise to a claim under any insurance policy required under this Article 22, the **Contractor** shall at all times fully cooperate with the **City** with regard to such potential or actual claim.

22.5 **Subcontractor** Insurance: In the event the **Contractor** requires any **Subcontractor** to procure insurance with regard to any operations under this **Contract** and requires such **Subcontractor** to name the **Contractor** as an **Additional Insured** thereunder, the **Contractor** shall ensure that the **Subcontractor** name the **City**, including its officials and employees, as an Additional Insured with coverage at least as broad as the most recent edition of ISO Form CG 20 26.

22.6 Wherever reference is made in Article 7 or this Article 22 to documents to be sent to the **Commissioner** (e.g., notices, filings, or submissions), such documents shall be sent to the address set forth in Schedule A of the General Conditions. In the event no address is set forth in Schedule A, such documents

are to be sent to the **Commissioner's** address as provided elsewhere in this **Contract**.

22.7 Apart from damages or losses covered by insurance provided pursuant to Articles 22.1.2, 22.1.3, or 22.1.5, the **Contractor** waives all rights against the **City**, including its officials and employees, for any damages or losses that are covered under any insurance required under this Article 22 (whether or not such insurance is actually procured or claims are paid thereunder) or any other insurance applicableto the operations of the **Contractor** and/or its employees, agents, or **Subcontractors**.

22.8 In the event the **Contractor** utilizes a self-insurance program to satisfy any of the requirements of this Article 22, the **Contractor** shall ensure that any such self-insurance program provides the **City** with all rights that would be provided by traditional insurance under this Article 22, including but not limited to the defense and indemnification obligations that insurers are required to undertake in liability policies.

22.9 Materiality/Non-Waiver: The **Contractor's** failure to secure policies in complete conformity with this Article 22, or to give an insurance company timely notice of any sort required in this **Contract** or to do anything else required by this Article 22 shall constitute a material breach of this **Contract**. Such breach shall not be waived or otherwise excused by any action or inaction by the **City** at any time.

22.10 Pursuant to General Municipal Law Section 108, this **Contract** shall be void and of no effect unless **Contractor** maintains Workers' Compensation Insurance for the term of this **Contract** tothe extent required and in compliance with the New York State Workers' Compensation Law.

22.11 Other Remedies: Insurance coverage provided pursuant to this Article 22 or otherwise shall not relieve the **Contractor** of any liability under this **Contract**, nor shall it preclude the **City** from exercising any rights or taking such other actions available to it under any other provisions of this **Contract** or **Law**.

ARTICLE 23. MONEY RETAINED AGAINST CLAIMS

23.1 If any claim shall be made by any person or entity (including **Other Contractors** with the **City** on this **Project**) against the **City** or against the **Contractor** and the **City** for any of the following:

(a) An alleged loss, damage, injury, theft or vandalism of any of the kinds referred to in Articles 7 and 12, plus the reasonable costs of defending the **City**, which in the opinion of the **Comptroller** may not be paid by an insurance company (for any reason whatsoever);or

(b) An infringement of copyrights, patents or use of patented articles, tools, etc., asreferred to in Article 57; or

(c) Damage claimed to have been caused directly or indirectly by the failure of the **Contractor** to perform the **Work** in strict accordance with this **Contract,**

the amount of such claim, or so much thereof as the **Comptroller** may deem necessary, may be withheld by the **Comptroller**, as security against such claim, from any money due hereunder. The **Comptroller**, in his/her discretion, may permit the **Contractor** to substitute other satisfactory security in lieu of the monies so withheld.

23.2 If an action on such claim is timely commenced and the liability of the **City**, or the **Contractor**,

or both, shall have been established therein by a final judgment of a court of competent jurisdiction, or if such claim shall have been admitted by the **Contractor** to be valid, the **Comptroller** shall pay such judgment or admitted claim out of the monies retained by the **Comptroller** under the provisions of this Article 23, and return the balance, if any, without interest, to the **Contractor**.

ARTICLE 24. MAINTENANCE AND GUARANTY

24.1 The **Contractor** shall promptly repair, replace, restore or rebuild, as the **Commissioner** may determine, any finished **Work** in which defects of materials or workmanship may appear or to which damage may occur because of such defects, during the one (1) year period subsequent to the date of **Substantial Completion** (or use and occupancy in accordance with Article 16), except where other periods of maintenance and guaranty are provided for in Schedule A.

24.2 As security for the faithful performance of its obligations hereunder, the **Contractor**, upon filing its requisition for payment on **Substantial Completion**, shall deposit with the **Commissioner** a sum equal to one (1%) percent of the price (or the amount fixed in Schedule A of the General Conditions) in cash or certified check upon a state or national bank and trust company or a check of such bank and trust company signed by a duly authorized officer thereof and drawn to the order of the **Comptroller**, or obligations of the **City**, which the **Comptroller** may approve as of equal value with the sum so required.

24.3 In lieu of the above, the **Contractor** may make such security payment to the **City** byauthorizing the **Commissioner** in writing to deduct the amount from the **Substantial Completion** payment which shall be deemed the deposit required above.

24.4 If the **Contractor** has faithfully performed all of its obligations hereunder the **Commissioner** shall so certify to the **Comptroller** within five (5) **Days** after the expiration of one (1) year from the date of **Substantial Completion** and acceptance of the **Work** or within thirty (30) **Days** after the expirationof the guarantee period fixed in the **Specifications**. The security payment shall be repaid to the **Contractor** without interest within thirty (30) **Days** after certification by the **Commissioner** to the **Comptroller** that the **Contractor** has faithfully performed all of its obligations hereunder.

24.5 Notice by the **Commissioner** to the **Contractor** to repair, replace, rebuild or restore such defective or damaged **Work** shall be timely, pursuant to this article, if given not later than ten (10) **Days** subsequent to the expiration of the one (1) year period or other periods provided for herein.

24.6 If the **Contractor** shall fail to repair, replace, rebuild or restore such defective or damaged **Work** promptly after receiving such notice, the **Commissioner** shall have the right to have the **Work** done by others in the same manner as provided for in the completion of a defaulted **Contract**, under Article 51.

24.7 If the security payment so deposited is insufficient to cover the cost of such **Work**, the **Contractor** shall be liable to pay such deficiency on demand by the **Commissioner**.

24.8 The **Engineer's** certificate setting forth the fair and reasonable cost of repairing, replacing, rebuilding or restoring any damaged or defective **Work** when performed by one other than the **Contractor**, shall be binding and conclusive upon the **Contractor** as to the amount thereof.

24.9 The **Contractor** shall obtain all manufacturers' warranties and guaranties of all equipment and materials required by this **Contract** in the name of the **City** and shall deliver same to the **Commissioner**. All of the **City's** rights and title and interest in and to said manufacturers' warranties and guaranties may be assigned by the **City** to any subsequent purchasers of such equipment and materials or lessees of the

premises into which the equipment and materials have been installed.

CHAPTER VI: CHANGES, EXTRA WORK, AND DOCUMENTATION OF CLAIM

ARTICLE 25. CHANGES

25.1 Changes may be made to this **Contract** only as duly authorized in writing by the **Commissioner** in accordance with the **Law** and this **Contract**. All such changes, modifications, and amendments will become a part of the **Contract**. **Work** so ordered shall be performed by the **Contractor**.

25.2 **Contract** changes will be made only for **Work** necessary to complete the **Work** included inthe original scope of the **Contract** and/or for non-material changes to the scope of the **Contract**.Changes are not permitted for any material alteration in the scope of **Work** in the **Contract**.

25.3 The **Contractor** shall be entitled to a price adjustment for **Extra Work** performed pursuant toa written change order. Adjustments to price shall be computed in one or more of the following ways:

25.3.1 By applicable unit prices specified in the **Contract**; and/or

25.3.2 By agreement of a fixed price; and/or

25.3.3 By time and material records; and/or

25.3.4 In any other manner approved by the **CCPO**.

25.4 All payments for change orders are subject to pre-audit by the **Engineering Audit Officer** and may be post-audited by the **Comptroller** and/or the **Agency**.

ARTICLE 26. METHODS OF PAYMENT FOR OVERRUNS AND EXTRA WORK

26.1 Overrun of Unit Price Item: An overrun is any quantity of a unit price item which the **Contractor** is directed to provide which is in excess of one hundred twenty-five (125%) percent of the estimated quantity for that item set forth in the bid schedule.

26.1.1 For any unit price item, the **Contractor** will be paid at the unit price bid for any quantity up to one hundred twenty-five (125%) percent of the estimated quantity for that item set forth in the bid schedule. If during the progress of the **Work**, the actual quantity of any unit price item required to complete the **Work** approaches the estimated quantity forthat item, and for any reason it appears that the actual quantity of any unit price item necessary to complete the **Work** will exceed the estimated quantity for that item by twenty- five (25%) percent, the **Contractor** shall immediately notify the **Engineer** of such anticipated overrun. The **Contractor** shall not be compensated for any quantity of a unit price item provided which is in excess of one hundred twenty-five (125%) percent of the estimated quantity for that item set forth in the bid schedule without written authorization from the **Engineer**.

26.1.2 If the actual quantity of any unit price item necessary to complete the **Work** will exceed one hundred twenty five (125%) percent of the estimated quantity for that item set forth in the bid schedule, the **City** reserves the right and the **Contractor** agrees to negotiate a new unit price for such item. In no event shall such negotiated new unit price exceed the unit bid price. If the **City** and **Contractor** cannot agree on a new unit price, then the **City** shall order the **Contractor** and the **Contractor** agrees to provide additional quantities of the item on the

basis of time and material records for the actual and reasonable cost as determined under Article 26.2, but in no event at a unit price exceeding the unit price bid.

26.2 **Extra Work:** For **Extra Work** where payment is by agreement on a fixed price in accordance with Article 25.3.2, the price to be paid for such **Extra Work** shall be based on the fair and reasonable estimated cost of the items set forth below. For **Extra Work** where payment is based on time and material records in accordance with Article 25.3.3, the price to be paid for such **Extra Work** shall be the actual and reasonable cost of the items set forth below, calculated in accordance with the formula specified therein, if any.

26.2.1 Necessary materials (including transportation to the **Site**); plus

26.2.2 Necessary direct labor, including payroll taxes (subject to statutory wage caps) and supplemental benefits; plus

26.2.3 Sales and personal property taxes, if any, required to be paid on materials not incorporated into such **Extra Work**; plus

26.2.4 Reasonable rental value of **Contractor**-owned (or **Subcontractor**-owned, as applicable), necessary plant and equipment other than **Small Tools**, plus fuel/energy costs. Except for fuel costs for pick-up trucks which shall be reimbursed based on a consumption of five (5) gallons per shift, fuel costs shall be reimbursed based on actual costs or, in the absence of auditable documentation, the following fuel consumption formula per operating hour: (.035) x (HP rating) x (Fuel cost/gallon). Reasonable rental value is defined as the lower of either seventy-five percent of the monthly prorated rental rates established in "The AED Green Book, Rental Rates and Specifications for Construction Equipment" published by Equipment Watch (the "Green Book"), or seventy-five percent of the monthly prorated rental rates established in the "Rental Rate Blue Book for Construction Equipment" published by Equipment Watch (the "Blue Book") (the applicable Blue Book rate being for rental only without the addition of any operational costs listed in the Blue Book). The reasonable rental value is deemed to be inclusive of all operating costs except for fuel/energy consumption and equipment operator's wages/costs. For multiple shift utilization, reimbursement shall be calculated as follows: first shift shall be seventy-five (75%) percent of such rental rates; second shift shall be sixty (60%) percent of the first shift rate; and third shift shall be forty (40%) percent of the first shift rate. Equipment on standby shall be reimbursed at one-third (1/3) the prorated monthly rental rate. **Contractor**-owned (or **Subcontractor**-owned, as applicable) equipment includes equipment from rental companies affiliated with or controlled by the **Contractor** (or **Subcontractor**, as applicable)**,** as determined by the **Commissioner**. In establishing cost reimbursement for non-operating **Contractor**-owned (or **Subcontractor**-owned, as applicable) equipment (scaffolding, sheeting systems, road plates, etc.), the **City** may restrict reimbursement to a purchase-salvage/life cycle basis if less than the computed rental costs; plus

26.2.5 Necessary installation and dismantling of such plant and equipment, including transportation to and from the **Site**, if any, provided that, in the case of non-**Contractor**-owned (or non-**Subcontractor**-owned, as applicable) equipment rented from a third party, the cost of installation and dismantling are not allowable if such costs are included in the rental rate; plus

26.2.6 Necessary fees charged by governmental entities; plus

26.2.7 Necessary construction-related service fees charged by non-governmental entities, such as landfill tipping fees; plus

26.2.8 Reasonable rental costs of non-**Contractor**-owned (or non-**Subcontractor**-owned, as applicable) necessary plant and equipment other than **Small Tools**, plus fuel/energy costs. Except for fuel costs for pick-up trucks which shall be reimbursed based on a consumption of five (5) gallons per shift, fuel costs shall be reimbursed based on actual costs or, in the absence of auditable documentation, the following fuel consumption formula per hour of operation: (.035) x (HP rating) x (Fuel cost/gallon). In lieu of renting, the **City** reserves the right to direct the purchase of non-operating equipment (scaffolding, sheeting systems, road plates, etc.), with payment on a purchase-salvage/life cycle basis, if less than the projected rental costs; plus

26.2.9 Workers' Compensation Insurance, and any insurance coverage expressly required by the **City** for the performance of the **Extra Work** which is different than the types of insurance required by Article 22 and Schedule A of the General Conditions. The cost of Workers' Compensation Insurance is subject to applicable payroll limitation caps and shall be based upon the carrier's Manual Rate for such insurance derived from the applicable class Loss Cost ("LC") and carrier's Lost Cost Multiplier ("LCM") approved by the New York State Department of Financial Services, and with the exception of experience rating, rate modifiers as promulgated by the New York Compensation Insurance Rating Board ("NYCIRB"); plus

26.2.10 Additional costs incurred as a result of the **Extra Work** for performance and payment bonds; plus

26.2.11 Twelve percent (12%) percent of the total of items in Articles 26.2.1 through 26.2.5 as compensation for overhead, except that no percentage for overhead will be allowed on **Payroll Taxes** or on the premium portion of overtime pay or on sales and personal property taxes. Overhead shall include without limitation, all costs and expenses in connection with administration, management superintendence, small tools, and insurance required by Schedule A of the General Conditions other than Workers' Compensation Insurance; plus

26.2.12 Ten (10%) percent of the total of items in Articles 26.2.1 through 26.2.5, plus the items in Article 26.2.11, as compensation for profit, except that no percentage for profit will be allowed on **Payroll Taxes** or on the premium portion of overtime pay or on sales and personal property taxes; plus

26.2.13 Five (5%) percent of the total of items in Articles 26.2.6 through 26.2.10 as compensation for overhead and profit.

26.3 Where the **Extra Work** is performed in whole or in part by other than the **Contractor's** own forces pursuant to Article 26.2, the **Contractor** shall be paid, subject to pre-audit by the **Engineering Audit Officer**, the cost of such **Work** computed in accordance with Article 26.2 above, plus an additional allowance of five (5%) percent to cover the **Contractor's** overhead and profit.

26.4 Where a change is ordered, involving both **Extra Work** and omitted or reduced **Contract Work,** the **Contract** price shall be adjusted, subject to pre-audit by the **EAO**, in an amount based on the difference between the cost of such **Extra Work** and of the omitted or reduced **Work**.

26.5 Where the **Contractor** and the **Commissioner** can agree upon a fixed price for **Extra Work** in accordance with Article 25.3.2 or another method of payment for **Extra Work** in accordance with Article 25.3.4, or for **Extra Work** ordered in connection with omitted **Work**, such method, subject to pre-audit by the **EAO**, may, at the option of the **Commissioner**, be substituted for the cost plus a percentage method provided in Article 26.2; provided, however, that if the **Extra Work** is performed by a **Subcontractor**, the **Contractor** shall not be entitled to receive more than an additional allowance of five (5%) percent for overhead and profit over

the cost of such **Subcontractor's Work** as computed in accordance with Article 26.2.

ARTICLE 27. RESOLUTION OF DISPUTES

27.1 All disputes between the **City** and the **Contractor** of the kind delineated in this Article 27.1 that arise under, or by virtue of, this **Contract** shall be finally resolved in accordance with the provisions of this Article 27 and the **PPB** Rules. This procedure for resolving all disputes of the kind delineated herein shall be the exclusive means of resolving any such disputes.

27.1.1 This Article 27 shall not apply to disputes concerning matters dealt with in other sections of the **PPB** Rules, or to disputes involving patents, copyrights, trademarks, or trade secrets (as interpreted by the courts of New York State) relating to proprietary rights in computer software.

27.1.2 This Article 27 shall apply only to disputes about the scope of **Work** delineated by the **Contract**, the interpretation of **Contract** documents, the amount to be paid for **Extra Work** or disputed work performed in connection with the **Contract**, the conformity of the **Contractor's Work** to the **Contract**, and the acceptability and quality of the **Contractor's Work**; such disputes arise when the **Engineer**, **Resident Engineer**, **Engineering Audit Officer**, or other designee of the **Commissioner** makes a determination with which the **Contractor** disagrees.

27.2 All determinations required by this Article 27 shall be made in writing clearly stated, with a reasoned explanation for the determination based on the information and evidence presented to the party making the determination. Failure to make such determination within the time required by this Article 27 shall be deemed a non-determination without prejudice that will allow application to the next level.

27.3 During such time as any dispute is being presented, heard, and considered pursuant to this Article 27, the **Contract** terms shall remain in force and the **Contractor** shall continue to perform **Work** as directed by the **ACCO** or the **Engineer**. Failure of the **Contractor** to continue **Work** as directed shall constitute a waiver by the **Contractor** of its claim.

27.4 Presentation of Disputes to **Commissioner**.

Notice of Dispute and Agency Response. The **Contractor** shall present its dispute in writing ("Notice of Dispute") to the **Commissioner** within thirty (30) Days of receiving written notice of the determination or action that is the subject of the dispute. This notice requirement shall not be read to replace any other notice requirements contained in the **Contract**. The Notice of Dispute shall include all the facts, evidence, documents, or other basis upon which the **Contractor** relies in support of its position, as well as a detailed computation demonstrating how any amount of money claimed by the **Contractor** inthe dispute was arrived at. Within thirty (30) Days after receipt of the detailed written submission comprising the complete Notice of Dispute, the **Engineer**, **Resident Engineer**, **Engineering Audit Officer**, or other designee of the **Commissioner** shall submit to the **Commissioner** all materials he or she deems pertinent to the dispute. Following initial submissions to the **Commissioner**, either party may demand of the other the production of any document or other material the demanding party believes may be relevant to the dispute. The requested party shall produce all relevant materials that are not otherwise protected by a legal privilege recognized by the courts of New York State. Any question of relevancy shall be determined by the **Commissioner** whose decision shall be final. Willful failure of the **Contractor** to produce any requested material whose relevancy the **Contractor** has not disputed, or whose relevancy has been affirmatively determined, shall constitute a waiver by the **Contractor** of its claim.

27.4.1 **Commissioner** Inquiry. The **Commissioner** shall examine the material and may, in his or her discretion, convene an informal conference with the **Contractor**, the **ACCO**, and the **Engineer**, **Resident Engineer**, **Engineering Audit Officer**, or other designee of the **Commissioner** to resolve the issue by mutual consent prior to reaching a determination. The **Commissioner** may seek such technical or other expertise as he or she shall deem appropriate, including the use of neutral mediators, and require any such additional material from either or both parties as he or she deems fit. The **Commissioner's** ability to render, and the effect of, a decision hereunder shall not be impaired by any negotiations in connection with the dispute presented, whether or not the **Commissioner** participated therein. The **Commissioner** may or, at the request of any party to the dispute, shall compel the participation of any **Other Contractor** with a contract related to the **Work** of this **Contract**, and that **Contractor** shall be bound by the decision of the **Commissioner**. Any **Other Contractor** thus brought into the dispute resolution proceeding shall have the same rights and obligations under this Article 27 as the **Contractor** initiating the dispute.

27.4.2 **Commissioner** Determination. Within thirty (30) **Days** after the receipt of all materials and information, or such longer time as may be agreed to by the parties, the **Commissioner** shall make his or her determination and shall deliver or send a copy of such determination to the **Contractor**, the **ACCO,** and **Engineer**, **Resident Engineer**,**Engineering Audit Officer**, or other designee of the **Commissioner**, as applicable, together with a statement concerning how the decision may be appealed.

27.4.3 Finality of **Commissioner's** Decision. The **Commissioner's** decision shall be final and binding on all parties, unless presented to the Contract Dispute Resolution Board pursuant to this Article 27. The **City** may not take a petition to the Contract Dispute Resolution Board. However, should the **Contractor** take such a petition, the **City** may seek, and the Contract Dispute Resolution Board may render, a determination less favorable to the **Contractor** and more favorable to the **City** than the decision of the **Commissioner**.

27.5 Presentation of Dispute to the **Comptroller**. Before any dispute may be brought by the **Contractor** to the Contract Dispute Resolution Board, the **Contractor** must first present its claim to the **Comptroller** for his or her review, investigation, and possible adjustment.

27.5.1 Time, Form, and Content of Notice. Within thirty (30) **Days** of its receipt of a decision by the **Commissioner,** the **Contractor** shall submit to the **Comptroller** and to the **Commissioner** a Notice of Claim regarding its dispute with the **Agency**. The Notice of Claim shall consist of (i) a brief written statement of the substance of the dispute, the amount of money, if any, claimed and the reason(s) the **Contractor** contends the dispute was wrongly decided by the **Commissioner**; (ii) a copy of the written decision of the **Commissioner**; and (iii) a copy of all materials submitted by the **Contractor** to the **Agency**, including the Notice of Dispute. The **Contractor** may not present to the **Comptroller** any material not presented to the **Commissioner**, except at the request of the **Comptroller**.

27.5.2 Response. Within thirty (30) **Days** of receipt of the Notice of Claim, the **Agency** shall make available to the **Comptroller** a copy of all material submitted by the **Agency** to the **Commissioner** in connection with the dispute. The **Agency** may not present to the **Comptroller** any material not presented to the **Commissioner** except at the request of the **Comptroller**.

27.5.3 **Comptroller** Investigation. The **Comptroller** may investigate the claim in dispute and, in the course of such investigation, may exercise all powers provided in Sections 7-201 and 7-203 of the Administrative Code. In addition, the **Comptroller** may demand of either party, and such party shall provide, whatever additional material the **Comptroller** deems pertinent to the claim, including original business records of the **Contractor**. Willful failure of the **Contractor** to produce within fifteen (15) **Days** any material requested by the **Comptroller** shall constitute a waiver by the **Contractor** of its claim. The **Comptroller** may also schedule an informal conference to be attended by the **Contractor**, **Agency** representatives, and any other personnel desired by the **Comptroller**.

27.5.4 Opportunity of **Comptroller** to Compromise or Adjust Claim. The **Comptroller** shall have forty-five (45) **Days** from his or her receipt of all materials referred to in Article 27.5.3 to investigate the disputed claim. The period for investigation and compromise may be further extended by agreement between the **Contractor** and the **Comptroller**, to a maximum of ninety (90) **Days** from the **Comptroller's** receipt of all materials. The **Contractor** may not present its petition to the Contract Dispute Resolution Board until the period for investigation and compromise delineated in this Article 27.5.4 has expired. In compromising or adjusting any claim hereunder, the **Comptroller** may not revise or disregard the terms of the **Contract** between the parties.

27.6 Contract Dispute Resolution Board. There shall be a Contract Dispute Resolution Board composed of:

27.6.1 The chief administrative law judge of the Office of Administrative Trials and Hearings (OATH) or his/her designated OATH administrative law judge, who shall act as chairperson, and may adopt operational procedures and issue such orders consistent with this Article 27 as may be necessary in the execution of the Contract Dispute Resolution Board's functions, including, but not limited to, granting extensions of time to present or respond to submissions;

27.6.2 The **CCPO** or his/her designee; any designee shall have the requisite background to consider and resolve the merits of the dispute and shall not have participated personally and substantially in the particular matter that is the subject of the dispute or report to anyone who so participated; and

27.6.3 A person with appropriate expertise who is not an employee of the **City**. This person shall be selected by the presiding administrative law judge from a prequalified panel of individuals, established and administered by OATH with appropriate background to act as decision-makers in a dispute. Such individual may not have a contract or dispute with the **City** or be an officer or employee of any company or organization that does, or regularly represents persons, companies, or organizations having disputes with the **City**.

27.7 Petition to the Contract Dispute Resolution Board. In the event the claim has not been settled or adjusted by the **Comptroller** within the period provided in this Article 27, the **Contractor**, within thirty (30) **Days** thereafter, may petition the Contract Dispute Resolution Board to review the

Commissioner's determination.

27.7.1 Form and Content of Petition by **Contractor**. The **Contractor** shall present its dispute to the Contract Dispute Resolution Board in the form of a petition, which shall include (i) a brief written statement of the substance of the dispute, the amount of money, if any, claimed, and the reason(s) the **Contractor** contends the dispute was wrongly decided by the **Commissioner**; (ii) a copy of the written Decision of the **Commissioner,** (iii) copies of all materials submitted by the **Contractor** to the Agency; (iv) a copy of the written decision of the **Comptroller**, if any, and (v) copies of all correspondence with, or written material submitted by the **Contractor**, to the **Comptroller**. The **Contractor** shall concurrently submit four (4) complete sets of the Petition: one set to the **City** Corporation Counsel (Attn: Commercial and Real Estate Litigation Division) and three (3) sets to the Contract Dispute Resolution Board at OATH's offices with proof of service on the **City** Corporation Counsel. In addition, the **Contractor** shall submit a copy of the written statement of the substance of the dispute, cited in (i) above, to both the **Commissioner** and the **Comptroller**.

27.7.2 **Agency** Response. Within thirty (30) **Days** of its receipt of the Petition by the **City** Corporation Counsel, the **Agency** shall respond to the brief written statement of the **Contractor** and make available to the Contract Dispute Resolution Board all material it submitted to the **Commissioner** and **Comptroller**. Three (3) complete copies of the **Agency** response shall be provided to the Contract Dispute Resolution Board and one to the **Contractor**. Extensions of time for submittal of the **Agency** response shall be given as necessary upon a showing of good cause or, upon consent of the parties, for an initial period of up to thirty (30) Days.

27.7.3 Further Proceedings. The Contract Dispute Resolution Board shall permit the **Contractor** to present its case by submission of memoranda, briefs, and oral argument. The Contract Dispute Resolution Board shall also permit the **Agency** to present its case in response to the **Contractor** by submission of memoranda, briefs, and oral argument. If requested by the **City** Corporation Counsel, the **Comptroller** shall provide reasonable assistance in the preparation of the **Agency's** case. Neither the **Contractor** nor the **Agency** may support its case with any documentation or other material that was not considered by the **Comptroller**, unless requested by the Contract Dispute Resolution Board. The Contract Dispute Resolution Board, in its discretion, may seek such technical or other expert advice as it shall deem appropriate and may seek, on its own or upon application of a party, any such additional material from any party as it deems fit. The Contract Dispute Resolution Board, in its discretion, may combine more than one dispute between the parties for concurrent resolution.

27.7.4 Contract Dispute Resolution Board Determination. Within forty-five (45) **Days** of the conclusion of all written submissions and oral arguments, the Contract Dispute Resolution Board shall render a written decision resolving the dispute. In an unusually complex case, the Contract Dispute Resolution Board may render its decision in a longer period, not to exceed ninety (90) **Days**, and shall so advise the parties at the commencement of this period. The Contract Dispute Resolution Board's decision must be consistent with the terms of the **Contract**. Decisions of the Contract Dispute Resolution Board shall only resolve matters before the Contract Dispute Resolution Board and shall not have precedential effect with respect to matters not before the Contract Dispute Resolution Board.

27.7.5 Notification of Contract Dispute Resolution Board Decision. The Contract Dispute Resolution Board shall send a copy of its decision to the **Contractor**, the **ACCO**, the Engineer, the **Comptroller**, the **City** Corporation Counsel, the CCPO, and the **PPB**. A decision in favor of the **Contractor** shall be subject to the prompt payment provisions of the **PPB** Rules. The

Required Payment Date shall be thirty (30) Days after the date the parties are formally notified of the Contract Dispute Resolution Board's decision.

27.7.6 Finality of Contract Dispute Resolution Board Decision. The Contract Dispute Resolution Board's decision shall be final and binding on all parties. Any party may seek review of the Contract Dispute Resolution Board's decision solely in the form of a challenge, filed within four (4) months of the date of the Contract Dispute Resolution Board's decision, in a court of competent jurisdiction of the State of New York, County of New York pursuant to Article 78 of the Civil Practice Law and Rules. Such review by the court shall be limited to the question of whether or not the Contract Dispute Resolution Board's decision was made in violation of lawful procedure, was affected by an error of **Law**, or was arbitrary and capricious or an abuse of discretion. No evidence or information shall be introduced or relied upon in such proceeding that was not presented to the Contract Dispute Resolution Board in accordance with this Article 27.

27.8 Any termination, cancellation, or alleged breach of the **Contract** prior to or during the pendency of any proceedings pursuant to this Article 27 shall not affect or impair the ability of the **Commissioner** or Contract Dispute Resolution Board to make a binding and final decision pursuant to this Article 27.

ARTICLE 28. RECORD KEEPING FOR EXTRA OR DISPUTED WORK OR WORK ON ATIME & MATERIALS BASIS

28.1 While the **Contractor** or any of its **Subcontractors** is performing **Work** on a time and material basis or **Extra Work** on a time and material basis ordered by the **Commissioner** under Article 25, or where the **Contractor** believes that it or any of its **Subcontractors** is performing **Extra Work** but a final determination by **Agency** has not been made, or the **Contractor** or any of its **Subcontractors** is performing disputed **Work** (whether on or off the **Site**), or complying with a determination or order under protest in accordance with Articles 11, 27, and 30, in each such case the **Contractor** shall furnish the **Resident Engineer** daily with three (3) copies of written statements signed by the **Contractor's** representative at the **Site** showing:

28.1.1 The name, trade, and number of each worker employed on such **Work** or engaged in complying with such determination or order, the number of hours employed, and the character of the **Work** each is doing; and

28.1.2 The nature and quantity of any materials, plant and equipment furnished or used in connection with the performance of such **Work** or compliance with such determination or order, and from whom purchased or rented.

28.2 A copy of such statement will be countersigned by the **Resident Engineer**, noting thereon any items not agreed to or questioned, and will be returned to the **Contractor** within two (2) **Days** after submission.

28.3 The **Contractor** and its **Subcontractors**, when required by the **Commissioner**, or the **Comptroller**, shall also produce for inspection, at the office of the **Contractor** or **Subcontractor**, any and all of its books, bid documents, financial statements, vouchers, records, daily job diaries and reports, and cancelled checks, and any other documents relating to showing the nature and quantity of the labor, materials, plant and equipment actually used in the performance of such **Work**, or in complying with such determination or order, and the amounts expended therefor, and shall permit the **Commissioner** and the

Comptroller to make such extracts therefrom, or copies thereof, as they or either of them may desire.

28.4 In connection with the examination provided for herein, the **Commissioner**, upon demand therefor, will produce for inspection by the **Contractor** such records as the **Agency** may have withrespect to such **Extra Work** or disputed **Work** performed under protest pursuant to order of the **Commissioner**, except those records and reports which may have been prepared for the purpose of determining the accuracy and validity of the **Contractor's** claim.

28.5 Failure to comply strictly with these requirements shall constitute a waiver of any claim for extra compensation or damages on account of the performance of such **Work** or compliance with such determination or order.

ARTICLE 29. OMITTED WORK

29.1 If any **Contract Work** in a lump sum **Contract**, or if any part of a lump sum item in a unit price, lump sum, or percentage-bid **Contract** is omitted by the **Commissioner** pursuant to Article 33, the **Contract** price, subject to audit by the EAO, shall be reduced by a pro rata portion of the lump sum bid amount based upon the percent of **Work** omitted subject to Article 29.4. For the purpose of determining the pro rata portion of the lump sum bid amount, the bid breakdown submitted in accordance with Article 41 shall be considered, but shall not be the determining factor.

29.2 If the whole of a lump sum item or units of any other item is so omitted by the **Commissioner** in a unit price, lump sum, or percentage-bid **Contract**, then no payment will be made therefor except as provided in Article 29.4.

29.3 For units that have been ordered but are only partially completed, the unit price shall be reduced by a pro rata portion of the unit price bid based upon the percentage of **Work** omitted subject to Article 29.4.

29.4 In the event the **Contractor**, with respect to any omitted **Work**, has purchased any non-cancelable material and/or equipment that is not capable of use except in the performance of this **Contract** and has been specifically fabricated for the sole purpose of this **Contract**, but not yet incorporated into the **Work**, the **Contractor** shall be paid for such material and/or equipment in accordance with Article 64.2.1(b); provided, however, such payment is contingent upon the **Contractor's** delivery of such material and/or equipment in acceptable condition to a location designated by the **City**.

29.5 The **Contractor** agrees to make no claim for damages or for loss of overhead and profit with regard to any omitted **Work**.

ARTICLE 30. NOTICE AND DOCUMENTATION OF COSTS AND DAMAGES; PRODUCTION OF FINANCIAL RECORDS

30.1 If the **Contractor** shall claim to be sustaining damages by reason of any act or omission of the **City** or its agents, it shall submit to the **Commissioner** within forty-five (45) **Days** from the time such damages are first incurred, and every thirty (30) **Days** thereafter to the extent additional damages are being incurred for the same condition, verified statements of the details and the amounts of such damages, together with documentary evidence of such damages. The **Contractor** may submit any of the above statements within such additional time as may be granted by the **Commissioner** in writing upon written request therefor. Failure of the **Commissioner** to respond in writing to a written request for additional time within thirty (30) **Days** shall be deemed a denial of the request. On failure of the **Contractor** to strictly comply with

the foregoing provisions, such claims shall be deemed waived and no right to recover on such claims shall exist. Damages that the **Contractor** may claim in any action or dispute resolution procedure arising under or by reason of this **Contract** shall not be different from or in excess of the statements and documentation made pursuant to this Article 30. This Article 30.1 does not apply to claims submitted to the **Commissioner** pursuant to Article 11 or to claims disputing a determination under Article 27.

30.2 In addition to the foregoing statements, the **Contractor** shall, upon notice from the **Commissioner**, produce for examination at the **Contractor's** office, by the **Engineer**, **Architect** or **Project Manager**, all of its books of account, bills, invoices, payrolls, subcontracts, time books, daily reports, bank deposit books, bank statements, check books, and cancelled checks, showing all of its acts and transactions in connection with or relating to or arising by reason of this **Contract**, and submit itself and persons in its employment, for examination under oath by any person designated by the **Commissioner** or **Comptroller** to investigate claims made or disputes against the **City** under this **Contract**. At such examination, a duly authorized representative of the **Contractor** may be present.

30.3 In addition to the statements required under Article 28 and this Article 30, the **Contractor** and/or its **Subcontractor** shall, within thirty (30) **Days** upon notice from the **Commissioner** or **Comptroller**, produce for examination at the **Contractor's** and/or **Subcontractor's** office, by a representative of either the **Commissioner** or **Comptroller**, all of its books of account, bid documents, financial statements, accountant workpapers, bills, invoices, payrolls, subcontracts, time books, daily reports, bank deposit books, bank statements, check books, and cancelled checks, showing all of its acts and transactions in connection with or relating to or arising by reason of this **Contract**. Further, the **Contractor** and/or its **Subcontractor** shall submit any person in its employment, for examination under oath by any person designated by the **Commissioner** or **Comptroller** to investigate claims made or disputes against the **City** under this **Contract**. At such examination, a duly authorized representative of the **Contractor** may be present.

30.4 Unless the information and examination required under Article 30.3 is provided by the **Contractor** and/or its **Subcontractor** upon thirty (30) **Days'** notice from the **Commissioner** or **Comptroller**, or upon the **Commissioner's** or **Comptroller's** written authorization to extend the time to comply, the **City** shall be released from all claims arising under, relating to or by reason of this **Contract**, except for sums certified by the **Commissioner** to be due under the provisions of this **Contract**. It is further stipulated and agreed that no person has the power to waive any of the foregoing provisions and that in any action or dispute resolution procedure against the **City** to recover any sum in excess of the sums certified by the **Commissioner** to be due under or by reason of this **Contract**, the **Contractor** must allege in its complaint and prove, at trial or during such dispute resolution procedure, compliance with the provisions of this Article 30.

30.5 In addition, after the commencement of any action or dispute resolution procedure by the **Contractor** arising under or by reason of this **Contract**, the **City** shall have the right to require the **Contractor** to produce for examination under oath, up until the trial of the action or hearing before the Contract Dispute Resolution Board, the books and documents described in Article 30.3 and submit itself and all persons in its employ for examination under oath. If this Article 30 is not complied with as required, then the **Contractor** hereby consents to the dismissal of the action or dispute resolutionprocedure.

CHAPTER VII: POWERS OF THE RESIDENT ENGINEER, THE ENGINEER ORARCHITECT AND THE COMMISSIONER

ARTICLE 31. THE RESIDENT ENGINEER

31.1 The **Resident Engineer** shall have the power to inspect, supervise, and control the performance

of the **Work**, subject to review by the **Commissioner**. The **Resident Engineer** shall not, however, have the power to issue an **Extra Work** order, except as specifically designated in writing bythe **Commissioner**.

ARTICLE 32. THE ENGINEER OR ARCHITECT OR PROJECT MANAGER

32.1 The **Engineer** or **Architect** or **Project Manager**, in addition to those matters elsewhere herein delegated to the **Engineer** and expressly made subject to his/her determination, direction or approval, shall have the power, subject to review by the **Commissioner**:

32.1.1 To determine the amount, quality, and location of the **Work** to be paid for hereunder; and

32.1.2 To determine all questions in relation to the **Work**, to interpret the **Contract Drawings**, **Specifications**, and **Addenda**, and to resolve all patent inconsistencies or ambiguities therein; and

32.1.3 To determine how the **Work** of this **Contract** shall be coordinated with **Work** of **Other Contractors** engaged simultaneously on this **Project**, including the power to suspend any part of the **Work**, but not the whole thereof; and

32.1.4 To make minor changes in the **Work** as he/she deems necessary, provided such changes do not result in a net change in the cost to the **City** or to the **Contractor** of the **Work** to be done under the **Contract**; and

32.1.5 To amplify the **Contract Drawings**, add explanatory information and furnish additional **Specifications** and drawings, consistent with this **Contract**.

32.2 The foregoing enumeration shall not imply any limitation upon the power of the **Engineer** or **Architect** or **Project Manager**, for it is the intent of this **Contract** that all of the **Work** shall generally be subject to his/her determination, direction, and approval, except where the determination, direction or approval of someone other than the **Engineer** or **Architect** or **Project Manager** is expressly called for herein.

32.3 The **Engineer** or **Architect** or **Project Manager** shall not, however, have the power to issuean **Extra Work** order, except as specifically designated in writing by the **Commissioner**.

ARTICLE 33. THE COMMISSIONER

33.1 The **Commissioner**, in addition to those matters elsewhere herein expressly made subject to his/her determination, direction or approval, shall have the power:

33.1.1 To review and make determinations on any and all questions in relation to this **Contract** and its performance; and

33.1.2 To modify or change this **Contract** so as to require the performance of **Extra Work** (subject, however, to the limitations specified in Article 25) or the omission of **Contract Work**; and

33.1.3 To suspend the whole or any part of the **Work** whenever in his/her judgment such suspension is required:

33.1.3(a) In the interest of the **City** generally; or

33.1.3(b) To coordinate the **Work** of the various contractors engaged on this **Project** pursuant to the provisions of Article 12; or

33.1.3(c) To expedite the completion of the entire **Project** even though the completion of this particular **Contract** may thereby be delayed.

ARTICLE 34. NO ESTOPPEL

34.1 Neither the **City** nor any **Agency**, official, agent or employee thereof, shall be bound, precluded or estopped by any determination, decision, approval, order, letter, payment or certificate made or given under or in connection with this **Contract** by the **City**, the **Commissioner**, the **Engineer**, the **Resident Engineer**, or any other official, agent or employee of the **City**, either before or after the final completion and acceptance of the **Work** and payment therefor:

34.1.1 From showing the true and correct classification, amount, quality or character of the **Work** actually done; or that any such determination, decision, order, letter, payment or certificate was untrue, incorrect or improperly made in any particular, or that the **Work**, or any part thereof, does not in fact conform to the requirements of this **Contract**; and

34.1.2 From demanding and recovering from the **Contractor** any overpayment made to it, or such damages as the **City** may sustain by reason of the **Contractor's** failure to perform each and every part of its **Contract**.

CHAPTER VIII: LABOR PROVISIONS

ARTICLE 35. EMPLOYEES

35.1 The **Contractor** and its **Subcontractors** shall not employ on the **Work**:

35.1.1 Anyone who is not competent, faithful and skilled in the **Work** for which he/she shall be employed; and whenever the **Commissioner** shall inform the **Contractor**, in writing, that any employee is, in his/her opinion, incompetent, unfaithful or disobedient, that employee shall be discharged from the **Work** forthwith, and shall not again be employed upon it; or

35.1.2 Any labor, materials or means whose employment, or utilization during the course of this **Contract**, may tend to or in any way cause or result in strikes, work stoppages, delays, suspension of **Work** or similar troubles by workers employed by the **Contractor** or its **Subcontractors**, or by any of the trades working in or about the buildings and premises where **Work** is being performed under this **Contract**, or by **Other Contractors** or their **Subcontractors** pursuant to other contracts, or on any other building or premises owned or operated by the **City**, its **Agencies**, departments, boards or authorities. Any violation by the **Contractor** of this requirement may, upon certification of the **Commissioner**, be considered as proper and sufficient cause for declaring the **Contractor** to be in default, and for the **City** to take action against it as set forth in Chapter X of this **Contract**, or such other article of this **Contract** as the Commissioner may deem proper; or

35.1.3 In accordance with Section 220.3-e of the Labor Law of the State of New York (hereinafter "Labor Law"), the **Contractor** and its **Subcontractors** shall not employ on the **Work** any apprentice, unless he/she is a registered individual, under a bona fide program registered with the New York State Department of Labor. The allowable ratio of apprentices to journey-level workers in any craft classification shall not be greater than the ratio permitted to the **Contractor** as to its work force on any job under the registered program. Any employee listed on a payroll at an apprentice wage rate, who is not registered as above, shall be paid the wage rate determined by the **Comptroller** of the **City** for the classification of **Work** actually performed. The **Contractor** or **Subcontractor** will be required to furnish written evidence of the registration of its program and apprentices as well as all the appropriate ratios and wage rates, for the area of the construction prior to using any apprentices on the **Contract Work**.

35.2 If the total cost of the **Work** under this **Contract** is at least two hundred fifty thousand ($250,000) dollars, all laborers, workers, and mechanics employed in the performance of the C**ontract** on the public work site, either by the **Contractor**, **Subcontractor** or other person doing or contracting to do the whole or a part of the **Work** contemplated by the **Contract**, shall be certified prior to performing any **Work** as having successfully completed a course in construction safety and health approved by the United States Department of Labor's Occupational Safety and Health Administration that is at least ten (10) hours in duration.

35.3 In accordance with Local Law Nos. 30-2012 and 33-2012, codified at sections 6-132 and 12-113 of the Administrative Code, respectively,

35.3.1 The **Contractor** shall not take an adverse personnel action with respect to an officer or employee in retaliation for such officer or employee making a report of information concerning conduct which such officer or employee knows or reasonably believes to involve corruption, criminal activity, conflict of interest, gross mismanagement or abuse of authority by any officer or employee relating to this **Contract** to (a) the Commissioner of the Department of Investigation, (b) a member of the New York City Council, the Public Advocate, or the **Comptroller**, or (c) the **CCPO**, **ACCO**, **Agency** head, or **Commissioner**.

35.3.2 If any of the **Contractor**'s officers or employees believes that he or she has been the subject of an adverse personnel action in violation of Article 35.3.1, he or she shall be entitled to bring a cause of action against the **Contractor** to recover all relief necessary to make him or her whole. Such relief may include but is not limited to: (a) an injunction to restrain continued retaliation, (b) reinstatement to the position such employee would have had but for the retaliation or to an equivalent position, (c) reinstatement of full fringe benefits and seniority rights, (d) payment of two times back pay, plus interest, and (e) compensation for any special damages sustained as a result of the retaliation, including litigation costs and reasonable attorney's fees.

35.3.3 The **Contractor** shall post a notice provided by the **City** in a prominent and accessible place on any site where work pursuant to the **Contract** is performed that contains information about:

35.3.3(a) how its employees can report to the New York City Department of Investigation allegations of fraud, false claims, criminality or corruption arising outof or in connection with the **Contract**; and

35.3.3(b) the rights and remedies afforded to its employees under Administrative Code sections 7-805 (the New York City False Claims Act) and 12-113 (the Whistleblower Protection Expansion Act) for lawful acts taken in connection withthe

reporting of allegations of fraud, false claims, criminality or corruption in connection with the **Contract**.

35.3.4 For the purposes of this Article 35.3, "adverse personnel action" includes dismissal, demotion, suspension, disciplinary action, negative performance evaluation, any action resulting in loss of staff, office space, equipment or other benefit, failure to appoint, failure to promote, or any transfer or assignment or failure to transfer or assign against the wishes of the affected officer or employee.

35.3.5 This Article 35.3 is applicable to all of the **Contractor**'s **Subcontractors** having subcontracts with a value in excess of $100,000; accordingly, the **Contractor** shall include this rider in all subcontracts with a value a value in excess of $100,000.

35.4 Article 35.3 is not applicable to this **Contract** if it is valued at $100,000 or less. Articles 35.3.1, 35.3.2, 35.3.4, and 35.3.5 are not applicable to this **Contract** if it was solicited pursuant to a finding of an emergency.

35.5 Paid Sick Leave Law.

35.5.1 Introduction and General Provisions.

35.5.1(a) The Earned Sick Time Act, also known as the Paid Sick Leave Law ("PSLL"), requires covered employees who annually perform more than 80 hours of work in New York City to be provided with paid sick time[2]. Contractors of the **City** or of other governmental entities may be required to provide sick time pursuant to the PSLL.

35.5.1(b) The PSLL became effective on April 1, 2014, and is codified at Title 20, Chapter 8, of the New York City Administrative Code. It is administered by the City's Department of Consumer Affairs ("DCA"); DCA's rules promulgated under the PSLL are codified at Chapter 7 of Title 6 of the Rules of the City of New York ("Rules").

35.5.1(c) The **Contractor** agrees to comply in all respects with the PSLL and the Rules, and as amended, if applicable, in the performance of this **Contract**. The **Contractor** further acknowledges that such compliance is a material term of this **Contract** and that failure to comply with the PSLL in performance of this **Contract** may result in its termination.

35.5.1(d) The **Contractor** must notify the **Agency Chief Contracting Officer** of the **Agency** with whom it is contracting in writing within ten (10) days of receipt of a complaint (whether oral or written) regarding the PSLL involving the performance of this **Contract**. Additionally, the **Contractor** must cooperate with DCA's education efforts and must comply with DCA's subpoenas and other document demands as set forth in the PSLL and Rules.

35.5.1(e) The PSLL is summarized below for the convenience of the **Contractor**. The **Contractor** is advised to review the PSLL and Rules in their entirety. On the

[2] Pursuant to the PSLL, if fewer than five employees work for the same employer, as determined pursuant to New York City Administrative Code § 20-912(g), such employer has the option of providing such employees uncompensated sick time.

website www.nyc.gov/PaidSickLeave there are links to the PSLL and the associated Rules as well as additional resources for employers, such as Frequently Asked Questions, timekeeping tools and model forms, and an event calendar of upcoming presentations and webinars at which the **Contractor** can get more information about how to comply with the PSLL. The **Contractor** acknowledges that it is responsible for compliance with the PSLL notwithstanding any inconsistent language contained herein.

35.5.2 Pursuant to the PSLL and the Rules: Applicability, Accrual, and Use.

35.5.2(a) An employee who works within the City of New York for more than eighty hours in any consecutive 12-month period designated by the employer as its "calendar year" pursuant to the PSLL ("Year") must be provided sick time. Employers must provide a minimum of one hour of sick time for every 30 hours worked by an employee and compensation for such sick time must be provided at the greater of the employee's regular hourly rate or the minimum wage. Employers are not required to provide more than 40 hours of sick time to an employee in any Year.

35.5.2(b) An employee has the right to determine how much sick time he or she will use, provided that employers may set a reasonable minimum increment for the use of sick time not to exceed four hours per **Day**. In addition, an employee may carry over up to 40 hours of unused sick time to the following Year, provided that no employer is required to allow the use of more than forty hours of sick time in a Year or carry over unused paid sick time if the employee is paid for such unused sick time and the employer provides the employee with at least the legally required amount of paid sick time for such employee for the immediately subsequent Year on the first **Day** of such Year.

35.5.2(c) An employee entitled to sick time pursuant to the PSLL may use sick time for any of the following:

i. such employee's mental illness, physical illness, injury, or health condition or the care of such illness, injury, or condition or such employee's need for medical diagnosis or preventive medical care;
ii. such employee's care of a family member (an employee's child, spouse, domestic partner, parent, sibling, grandchild or grandparent, or the child or parent of an employee's spouse or domestic partner) who has a mental illness, physical illness, injury or health condition or who has a need for medical diagnosis or preventive medical care;
iii. closure of such employee's place of business by order of a public official due to a public health emergency; or
iv. such employee's need to care for a child whose school or childcare providerhas been closed due to a public health emergency.

35.5.2(d) An employer must not require an employee, as a condition of taking sick time, to search for a replacement. However, an employer may require an employee to provide: reasonable notice of the need to use sick time; reasonable documentation that the use of sick time was needed for a reason above if for an absence of more than three consecutive work days; and/or written confirmation that an employee used sick time pursuant to the PSLL. However, an employer may not require documentation specifying the nature of a medical condition or otherwise require disclosure of the details of a medical condition as a condition of providing sick time and health information obtained solely due to an employee's use of sick time pursuant to the PSLL must be treated by the

employer as confidential.

35.5.2(e) If an employer chooses to impose any permissible discretionary requirement as a condition of using sick time, it must provide to all employees a written policy containing those requirements, using a delivery method that reasonably ensures that employees receive the policy. If such employer has not provided its written policy, it may not deny sick time to an employee because of non-compliance with such a policy.

35.5.2(f) Sick time to which an employee is entitled must be paid no later than the payday for the next regular payroll period beginning after the sick time was used.

35.5.3 Exemptions and Exceptions. Notwithstanding the above, the PSLL does not apply to any of the following:

35.5.3(a) an independent contractor who does not meet the definition of employee under section 190(2) of the New York State Labor Law;

35.5.3(b) an employee covered by a valid collective bargaining agreement in effect on April 1, 2014, until the termination of such agreement;

35.5.3(c) an employee in the construction or grocery industry covered by a valid collective bargaining agreement if the provisions of the PSLL are expressly waived in such collective bargaining agreement;

35.5.3(d) an employee covered by another valid collective bargaining agreement if such provisions are expressly waived in such agreement and such agreement provides a benefit comparable to that provided by the PSLL for such employee;

35.5.3(e) an audiologist, occupational therapist, physical therapist, or speech language pathologist who is licensed by the New York State Department of Education and who calls in for work assignments at will, determines his or her own schedule, has the ability to reject or accept any assignment referred to him or her, and is paid an average hourly wage that is at least four times the federal minimum wage;

35.5.3(f) an employee in a work study program under Section 2753 of Chapter 42 of the United States Code;

35.5.3(g) an employee whose work is compensated by a qualified scholarship program as that term is defined in the Internal Revenue Code, Section 117 of Chapter 20 of the United States Code; or

35.5.3(h) a participant in a Work Experience Program (WEP) under section 336-c of the New York State Social Services Law.

35.5.4 Retaliation Prohibited. An employer may not threaten or engage in retaliation against an employee for exercising or attempting in good faith to exercise any right provided by the PSLL. In addition, an employer may not interfere with any investigation, proceeding, or hearing pursuant to the PSLL.

35.5.5 Notice of Rights.

35.5.5(a) An employer must provide its employees with written notice of their rights pursuant to the PSLL. Such notice must be in English and the primary language spoken

by an employee, provided that DCA has made available a translation into such language. Downloadable notices are available on DCA's website at http://www.nyc.gov/html/dca/html/law/PaidSickLeave.shtml.

35.5.5(b) Any person or entity that willfully violates these notice requirements is subject to a civil penalty in an amount not to exceed fifty dollars for each employee who was not given appropriate notice.

35.5.6 Records. An employer must retain records documenting its compliance with the PSLL for a period of at least three years, and must allow DCA to access such records in furtherance of an investigation related to an alleged violation of the PSLL.

35.5.7 Enforcement and Penalties.

35.5.7(a) Upon receiving a complaint alleging a violation of the PSLL, DCA has the right to investigate such complaint and attempt to resolve it through mediation. Within 30 **Days** of written notification of a complaint by DCA, or sooner in certain circumstances, the employer must provide DCA with a written response and such other information as DCA may request. If DCA believes that a violation of the PSLL has occurred, it has the right to issue a notice of violation to the employer.

35.5.7(b) DCA has the power to grant an employee or former employee all appropriate relief as set forth in New York City Administrative Code § 20-924(d). Such relief may include, among other remedies, treble damages for the wages that should have been paid, damages for unlawful retaliation, and damages and reinstatement for unlawful discharge. In addition, DCA may impose on an employer found to have violated the PSLL civil penalties not to exceed $500 for a first violation, $750 for a second violation within two years of the first violation, and
$1,000 for each succeeding violation within two years of the previous violation.

35.5.8 More Generous Polices and Other Legal Requirements. Nothing in the PSLL is intended to discourage, prohibit, diminish, or impair the adoption or retention of a more generous sick time policy, or the obligation of an employer to comply with any contract, collective bargaining agreement, employment benefit plan or other agreement providing more generous sick time. The PSLL provides minimum requirements pertaining to sick time and does not preempt, limit or otherwise affect the applicability of any other law, regulation, rule, requirement, policy or standard that provides for greater accrual or use by employees of sick leave or time, whether paid or unpaid, or that extends other protections to employees. The PSLL may not be construed as creating or imposing any requirement in conflict with any federal or state law, rule or regulation.

35.6 HireNYC: Hiring and Reporting Requirements. This Article 35.6 applies to construction contracts of $1,000,000 or more. The **Contractor** shall comply with the requirements of Articles 35.6.1-35.6.5 for all non-trades jobs (e.g., for an administrative position arising out of **Work** ant located in New York City). The **Contractor** shall reasonably cooperate with SBS and the **City** on specific outreach events, including "Hire-on-the-Spot" events, for the hiring of trades workers in connection with the **Work**. If provided elsewhere in this **Contract**, this **Contract** is subject to a project labor agreement.

35.6.1 Enrollment. The **Contractor** shall enroll with the HireNYC system, found at www.nyc.gov/sbs, within thirty (30) days after the registration of this **Contract** pursuant to Section 328 of the New York City Charter. The **Contractor** shall provide information about the business, designate a primary contact and say whether it intends to hire for any entry

to mid-level job opportunities arising from this **Contract** and located in New York City, and, if so, the approximate start date of the first hire.

35.6.2 Job Posting Requirements.

35.6.2(a) Once enrolled in HireNYC, the **Contractor** agrees to update the HireNYC portal with all entry to mid-level job opportunities arising from this **Contract** and located in New York City, if any, which shall be defined as jobs requiring no more than an associate degree, as provided by the New York State Department of Labor (see Column F of https://labor.ny.gov/stats/2012-2022- NYS- Employment-Prospects.xls). The information to be updated includes the types of entry and mid-level positions made available from the work arising from the **Contract** and located in New York City, the number of positions, the anticipated schedule of initiating the hiring process for these positions, and the contact information for the **Contractor's** representative charged with overseeing hiring. The **Contractor** must update the HireNYC portal with any hiring needs arising from the contract and located in New York City, and the requirements of the jobs to be filled, no less than three weeks prior to the intended first day of employment for each new position, except with the permission of SBS, not to be unreasonably withheld, and must also update the HireNYC portal as set forth below.

35.6.2(b) After enrollment through HireNYC and submission of relevant information, SBS will work with the **Contractor** to develop a recruitment plan which will outline the candidate screening process, and will provide clear instructions as to when, where, and how interviews will take place. HireNYC will screen applicants based on employer requirements and refer applicants whom it believes are qualified to the **Contractor** for interviews. The **Contractor** must interview referred applicants whom it believes are qualified.

35.6.2(c) After completing an interview of a candidate referred by HireNYC, the **Contractor** must provide feedback via the portal within twenty (20) business days to indicate which candidates were interviewed and hired, if any. In addition, the **Contractor** shall provide the start date of new hires, and additional information reasonably related to such hires, within twenty (20) business days after the start date. In the event the **Contractor** does not have any job openings covered by this Rider in any given year, the **Contractor** shall be required to provide an annual update to HireNYC to that effect. For this purpose, the reporting year shall run from the date of the registration of the **Contract** pursuant to Charter section 328 and each anniversary date.

35.6.2(d) These requirements do not limit the **Contractor's** ability to assess the qualifications of prospective workers, and to make final hiring and retention decisions. No provision of this Article 35.6 shall be interpreted so as to require the **Contractor** to employ any particular worker.

35.6.2(e) In addition, the provisions of this Article 35.6 shall not apply to positions that the **Contractor** intends to fill with employees employed pursuant to the job retention provision of Section 22-505 of the Administrative Code of the City of New York. The **Contractor** shall not be required to report such openings with HireNYC. However, the **Contractor** shall enroll with the HireNYC system pursuant to Article 35.6.1, above, and, if such positions subsequently become open, then the remaining provisions of this Article 35.6 will apply.

35.6.3 Breach and Liquidated Damages. If the **Contractor** fails to comply with the termsof the **ContrSact** and this Article 35.6 (l) by not enrolling its business with HireNYC; (2) by not informing HireNYC, as required, of open positions; or (3) by failing to interview a qualified candidate, the **Agency** may assess liquidated damages in the amount of two- thousand five hundred dollars ($2,500) per breach. For all other events of noncompliance with the terms of this Article 35.6, the **Agency** may assess liquidated damages in the amount of five hundred dollars ($500) per breach. Furthermore, in the event the **Contractor** breaches the requirements of this Article 35.6 during the term of the **Contract**, the **City** may hold the **Contractor** in default of this **Contract**.

35.6.4 Audit Compliance. In addition to the auditing requirements set forth in other partsof the **Contract**, the **Contractor** shall permit SBS and the **City** to inspect any and all records concerning or relating to job openings or the hiring of individuals for work arising from the **Contract** and located in New York City. The **Contractor** shall permit an inspection within seven (7) business days of the request.

35.6.5 Other Reporting Requirements. The **Contractor** shall report to the **City**, on amonthly basis, all information reasonably requested by the **City** that is necessary for the **City** to comply with any reporting requirements imposed by **Law**, including any requirement that the **City** maintain a publicly accessible database. In addition, the **Contractor** agrees to comply with all reporting requirements imposed by **Law**, or as otherwise requested by the **City**.

35.6.6 Federal Hiring Requirements. If this **Contract** is federally funded (as indicated elsewhere in this Contract), the **Contractor** shall comply with all federal hiring requirements as may be set forth in this **Contract**, including, as applicable: (a) Section 3 of the HUD Act of 1968, which requires, to the greatest extent feasible, economic opportunities for 30 percent of new hires be given to low- and very low-income persons, particularly persons who are recipients of HUD assistance for housing and Executive Order 11246, which prohibits discrimination in employment due to race, color, religion,sex or national origin, and requires the implementation of goals for minority and female participation for work involving any construction trade.

ARTICLE 36. NO DISCRIMINATION

36.1 The **Contractor** specifically agrees, as required by Labor Law Section 220-e, as amended, that:

36.1.1 In the hiring of employees for the performance of **Work** under this **Contract** or any subcontract hereunder, neither the **Contractor**, **Subcontractor**, nor any person acting on behalf of such **Contractor** or **Subcontractor**, shall by reason of race, creed, color or national origin discriminate against any citizen of the State of New York who is qualifiedand available to perform the **Work** to which the employment relates;

36.1.2 Neither the **Contractor**, **Subcontractor**, nor any person on its behalf shall, in any manner, discriminate against or intimidate any employee hired for the performance of **Work** under this **Contract** on account of race, creed, color or national origin;

36.1.3 There may be deducted from the amount payable to the **Contractor** by the **City** under this **Contract** a penalty of fifty ($50.00) dollars for each person for each **Day** during which such person was discriminated against or intimidated in violation of the provisions of this

Contract; and

36.1.4 This **Contract** may be cancelled or terminated by the **City** and all moneys due or to become due hereunder may be forfeited, for a second or any subsequent violation of the terms or conditions of this Article 36.

36.1.5 This Article 36 covers all construction, alteration and repair of any public building or public work occurring in the State of New York and the manufacture, sale, and distribution of materials, equipment, and supplies to the extent that such operations are performed within the State of New York pursuant to this **Contract**.

36.2 The **Contractor** specifically agrees, as required by Section 6-108 of the Administrative Code,as amended, that:

36.2.1 It shall be unlawful for any person engaged in the construction, alteration or repairof buildings or engaged in the construction or repair of streets or highways pursuant to a **Contract** with the **City** or engaged in the manufacture, sale or distribution of materials, equipment or supplies pursuant to a **Contract** with the **City** to refuse to employ or to refuse to continue in any employment any person on account of the race, color or creed of such person.

36.2.2 It shall be unlawful for any person or any servant, agent or employee of any person, described in Article 36.1.2, to ask, indicate or transmit, orally or in writing, directly or indirectly, the race, color or creed or religious affiliation of any person employed or seeking employment from such person, firm or corporation.

36.2.3 Breach of the foregoing provisions shall be deemed a violation of a material provision of this **Contract**.

36.2.4 Any person, or the employee, manager or owner of or officer of such firm or corporation who shall violate any of the provisions of this Article 36.2 shall, upon conviction thereof, be punished by a fine of not more than one hundred ($100.00) dollars or by imprisonment for not more than thirty (30) **Days**, or both.

36.3 This **Contract** is subject to the requirements of Executive Order No. 50 (1980) ("E.O. 50"), as revised, and the rules and regulations promulgated thereunder. No contract will be awarded unless and until these requirements have been complied with in their entirety. By signing this **Contract**, the **Contractor** agrees that it:

36.3.1 Will not engage in any unlawful discrimination against any employee or applicantfor employment because of race, creed, color, national origin, sex, age, disability, marital status or sexual orientation with respect to all employment decisions including, but not limited to, recruitment, hiring, upgrading, demotion, downgrading, transfer, training, ratesof pay or other forms of compensation, layoff, termination, and all other terms and conditions of employment; and

36.3.2 Will not engage in any unlawful discrimination in the selection of **Subcontractors** on the basis of the owner's race, color, creed, national origin, sex, age, disability, marital status or sexual orientation; and

36.3.3 Will state in all solicitations or advertisements for employees placed by or on behalf of the **Contractor** that all qualified applicants will receive consideration for employment without unlawful discrimination based on race, creed, color, national origin, sex, age, citizens status,

disability, marital status, sexual orientation, or that it is an equal employment opportunity employer; and

36.3.4 Will send to each labor organization or representative of workers with which it has a collective bargaining agreement or other contract or memorandum of understanding, written notification of its equal employment opportunity commitments under E.O. 50 and the rules and regulations promulgated thereunder; and

36.3.5 Will furnish, before the award of the **Contract**, all information and reports, including an employment report, that are required by E.O. 50, the rules and regulations promulgated thereunder, and orders of the **City** Department of Business Services, Division of Labor Services (**DLS**) and will permit access to its books, records, and accounts by the **DLS** for the purposes of investigation to ascertain compliance with such rules, regulations, and orders.

36.4 The **Contractor** understands that in the event of its noncompliance with the nondiscrimination clauses of this **Contract** or with any of such rules, regulations, or orders, such noncompliance shall constitute a material breach of this **Contract** and noncompliance with E.O. 50 and the rules and regulations promulgated thereunder. After a hearing held pursuant to the rules of the **DLS**, the Director of the **DLS** may direct the **Commissioner** to impose any or all of the following sanctions:

36.4.1 Disapproval of the **Contractor**; and/or

36.4.2 Suspension or termination of the **Contract**; and/or

36.4.3 Declaring the **Contractor** in default; and/or

36.4.4 In lieu of any of the foregoing sanctions, the Director of the **DLS** may impose an employment program.

In addition to any actions taken under this **Contract**, failure to comply with E.O. 50 and the rules and regulations promulgated thereunder, in one or more instances, may result in a **City Agency** declaring the **Contractor** to be non-responsible in future procurements. The **Contractor** further agrees that it will refrain from entering into any **Contract** or **Contract** modification subject to E.O. 50 and the rules and regulations promulgated thereunder with a **Subcontractor** who is not in compliance with the requirements of E.O. 50 and the rules and regulations promulgated thereunder.

36.5 The **Contractor** specifically agrees, as required by Section 6-123 of the AdministrativeCode, that:

36.5.1 The **Contractor** will not engage in any unlawful discriminatory practice in violation of Title 8 of the Administrative Code; and

36.5.2 Any failure to comply with this Article 36.5 may subject the **Contractor** to the remedies set forth in Section 6-123 of the Administrative Code, including, where appropriate, sanctions such as withholding of payment, imposition of an employment program, finding the **Contractor** to be in default, cancellation of the **Contract**, or any other sanction or remedy provided by **Law** or **Contract**.

ARTICLE 37. LABOR LAW REQUIREMENTS

37.1 The **Contractor** shall strictly comply with all applicable provisions of the Labor Law, as

amended. Such compliance is a material term of this **Contract**.

37.2 The **Contractor** specifically agrees, as required by Labor Law Sections 220 and 220-d, as amended, that:

37.2.1 Hours of **Work**: No laborer, worker, or mechanic in the employ of the **Contractor**, **Subcontractor** or other person doing or contracting to do the whole or a part of the **Work** contemplated by this **Contract** shall be permitted or required to work more than eight (8) hours in any one (1) **Day**, or more than five (5) **Days** in any one (1) week, except as provided in the Labor Law and in cases of extraordinary emergency including fire, flood, or danger to life or property, or in the case of national emergency when so proclaimed by the President of the United States of America.

37.2.2 In situations in which there are not sufficient laborers, workers, and mechanics who may be employed to carry on expeditiously the **Work** contemplated by this **Contract** as a result of such restrictions upon the number of hours and **Days** of labor, and the immediate commencement or prosecution or completion without undue delay of the **Work** is necessary for the preservation of the **Site** and/or for the protection of the life and limb of the persons using the same, such laborers, workers, and mechanics shall be permitted or required to work more than eight (8) hours in any one (1) **Day**; or five (5) **Days** in any one (1) week; provided, however, that upon application of any **Contractor**, the **Commissioner** shall have first certified to the Commissioner of Labor of the State of New York (hereinafter "Commissioner of Labor") that such public **Work** is of an important nature and that a delay in carrying it to completion would result in serious disadvantage to the public; and provided, further, that such Commissioner of Labor shall have determined that such an emergency does in fact exist as provided in Labor Law Section 220.2.

37.2.3 Failure of the **Commissioner** to make such a certification to the Commissioner of Labor shall not entitle the **Contractor** to damages for delay or for any cause whatsoever.

37.2.4 Prevailing Rate of Wages: The wages to be paid for a legal day's **Work** to laborers, workers, or mechanics employed upon the **Work** contemplated by this **Contract** or upon any materials to be used thereon shall not be less than the "prevailing rate of wage" as defined in Labor Law Section 220, and as fixed by the **Comptroller** in the attached Schedule of Wage Rates and in updated schedules thereof. The prevailing wage rates and supplemental benefits to be paid are those in effect at the time the **Work** is being performed.

37.2.5 Requests for interpretation or correction in the Information for Bidders includes all requests for clarification of the classification of trades to be employed in the performance of the **Work** under this **Contract**. In the event that a trade not listed in the **Contract** is in fact employed during the performance of this **Contract**, the **Contractor** shall be required to obtain from the **Agency** the prevailing wage rates and supplementary benefits for the trades used and to complete the performance of this **Contract** at the price at which the **Contract** was awarded.

37.2.6 Minimum Wages: Except for employees whose wage is required to be fixed pursuant to Labor Law Section 220, all persons employed by the **Contractor** and any **Subcontractor** in the manufacture or furnishing of the supplies, materials, or equipment, or the furnishing of work, labor, or services, used in the performance of this **Contract**, shall be paid, without subsequent deduction or rebate unless expressly authorized by **Law**, not less than the sum mandated by **Law**.

37.3 Working Conditions: No part of the **Work**, labor or services shall be performed or rendered by

the **Contractor** in any plants, factories, buildings or surroundings or under working conditions which are unsanitary or hazardous or dangerous to the health and safety of employees engaged in the performance of this **Contract**. Compliance with the safety, sanitary, and factory inspection **Laws** of the state in which the **Work** is to be performed shall be prima facie evidence of compliance with this Article 37.3.

37.4 Prevailing Wage Enforcement: The **Contractor** agrees to pay for all costs incurred by the **City** in enforcing prevailing wage requirements, including the cost of any investigation conducted by or on behalf of the **Agency** or the **Comptroller,** where the **City** discovers a failure to comply with any of the requirements of this Article 37 by the **Contractor** or its **Subcontractor(s)**. The **Contractor** also agrees that, should it fail or refuse to pay for any such investigation, the **Agency** is hereby authorized to deduct from a **Contractor's** account an amount equal to the cost of such investigation.

37.4.1 The Labor Law Section 220 and Section 220-d, as amended, provide that this **Contract** shall be forfeited and no sum paid for any **Work** done hereunder on a second conviction for willfully paying less than:

37.4.1(a) The stipulated prevailing wage scale as provided in Labor Law section 220, as amended, or

37.4.1(b) The stipulated minimum hourly wage scale as provided in Labor Law section 220-d, as amended.

37.4.2 For any breach or violation of either working conditions (Article 37.3) or minimum wages (Article 37.2.6) provisions, the party responsible therefor shall be liable to the **City** for liquidated damages, which may be withheld from any amounts due on any contracts with the **City** of such party responsible, or may be recovered in actions brought by the **City** Corporation Counsel in the name of the **City**, in addition to damages for any other breach of this **Contract**, for a sum equal to the amount of any underpayment of wages due to any employee engaged in the performance of this **Contract**. In addition, the **Commissioner** shall have the right to cancel contracts and enter into other contracts for the completion of the original contract, with or without public letting, and the original **Contractor** shall be liable for any additional cost. All sums withheld or recovered as deductions, rebates, refunds, or underpayment of wages hereunder, shall be held in a special deposit account and shall be paid without interest, on order of the **Comptroller**, directly to the employees who have been paid less than minimum rates of pay as set forth herein and on whose account such sums were withheld or recovered, provided that no claims by employees for such payments shall be entertained unless made within two (2) years from the date of actual notice to the **Contractor** of the withholding or recovery of such sums by the **City**.

37.4.3 A determination by the **Comptroller** that a **Contractor** and/or its **Subcontractor** willfully violated Labor Law Section 220 will be forwarded to the **City's** five District Attorneys for review.

37.4.4 The **Contractor's** or **Subcontractor's** noncompliance with this Article 37.4 and Labor Law Section 220 may result in an unsatisfactory performance evaluation and the **Comptroller** may also find and determine that the **Contractor** or **Subcontractor** willfully violated the New York Labor **Law**.

37.4.4(a) An unsatisfactory performance evaluation for noncompliance with this Article 37.4 may result in a determination that the **Contractor** is a non-responsible bidder on subsequent procurements with the **City** and thus a rejection of a future award

of a contract with the **City**, as well as any other sanctions provided for by**Law**.

37.4.4(b) Labor Law Section 220-b, as amended, provides that when two (2) final determinations have been rendered against a **Contractor** or **Subcontractor** within any consecutive six (6) year period determining that such **Contractor** or **Subcontractor** has willfully failed to pay the prevailing rate of wages or to provide supplements in accordance with the Labor Law and this Article 37.4, whether such failures were concurrent or consecutive and whether or not such final determinations concerning separate public works projects are rendered simultaneously, such **Contractor** or **Subcontractor** shall be ineligible to submit a bid on or be awarded any public works contract with the **City** for a period of five (5) years from the second final determination. If the final determination involves the falsification of payroll records or the kickback of wages or supplements, the **Contractor** or **Subcontractor** shall be ineligible to submit a bid on or be awarded any public works contract with the **City** for a period of five (5) years from the first final determination.

37.4.4(c) Labor Law Section 220, as amended, provides that the **Contractor** or **Subcontractor** found to have violated this Article 37.4 may be directed to make payment of wages or supplements including interest found to be due, and the **Contractor** or **Subcontractor** may be directed to make payment of a further sum asa civil penalty in an amount not exceeding twenty-five (25%) percent of the total amount found to be due.

37.5 The **Contractor** and its **Subcontractors** shall within ten (10) **Days** after mailing of a Noticeof Award or written order, post in prominent and conspicuous places in each and every plant, factory, building, and structure where employees of the **Contractor** and its **Subcontractors** engaged in the performance of this **Contract** are employed, notices furnished by the **City**, in relation to prevailing wages and supplements, minimum wages, and other stipulations contained in Sections 220 and 220-h of the Labor Law, and the **Contractor** and its **Subcontractors** shall continue to keep such notices posted in such prominent and conspicuous places until **Final Acceptance** of the supplies, materials, equipment, or **Work**, labor, or services required to be furnished or rendered under this **Contract**.

37.6 The **Contractor** shall strictly comply with all of the provisions of Articles 37.6.1 through 37.6.5, and provide for all workers, laborers or mechanics in its employ, the following:

37.6.1 Notices Posted At **Site**: Post, in a location designated by the **City**, schedules of prevailing wages and supplements for this **Project**, a copy of all re-determinations of such schedules for the **Project**, the Workers' Compensation **Law** Section 51 notice, all other notices required by **Law** to be posted at the **Site**, the **City** notice that this **Project** is a public works project on which each worker is entitled to receive the prevailing wages and supplements for the occupation at which he or she is working, and all other notices whichthe **City** directs the **Contractor** to post. The **Contractor** shall provide a surface for such notices which is satisfactory to the **City**. The **Contractor** shall maintain and keep current such notices in a legible manner and shall replace any notice or schedule which is damaged, defaced, illegible or removed for any reason. The **Contractor** shall post such notices before commencing any **Work** on the **Site** and shall maintain such notices until all **Work**on the **Site** is complete; and

37.6.2 Daily **Site** Sign-in Sheets: Maintain daily **Site** sign-in sheets, and require that **Subcontractors** maintain daily **Site** sign-in sheets for its employees, which include blank spaces for an employee's name to be both printed and signed, job title, date started and Social Security number, the time the employee began work and the time the employee left

work, until **Final Acceptance** of the supplies, materials, equipment, or **Work**, labor, or services to be furnished or rendered under this **Contract** unless exception is granted by the **Comptroller** upon application by the **Agency**. In the alternative, subject to the approval of the **CCPO**, the **Contractor** and **Subcontractor** may maintain an electronic or biometric sign-in system, which provides the information required by this Article 37.6.2; and

37.6.3 Individual Employee Information Notices: Distribute a notice to each worker, laborer or mechanic employed under this **Contract**, in a form provided by the **Agency**, that this **Project** is a public works project on which each worker, laborer or mechanic is entitled to receive the prevailing rate of wages and supplements for the occupation at which he orshe is working. If the total cost of the **Work** under this **Contract** is at least two hundred fifty thousand ($250,000) dollars, such notice shall also include a statement that each worker, laborer or mechanic must be certified prior to performing any **Work** as having successfully completed a course in construction safety and health approved by the United States Department of Labor's Occupational Safety and Health Administration that is at least ten (10) hours in duration. Such notice shall be distributed to each worker before he or she starts performing any **Work** of this **Contract** and with the first paycheck after July first of each year. "Worker, laborer or mechanic" includes employees of the **Contractor** and all **Subcontractors** and all employees of suppliers entering the **Site**. At the time of distribution, the **Contractor** shall have each worker, laborer or mechanic sign a statement, in a form provided by the **Agency**, certifying that the worker has received the notice required by this Article 37.6.3, which signed statement shall be maintained with the payroll records required by this **Contract**; and

37.6.3(a) The **Contractor** and each **Subcontractor** shall notify each worker, laborer or mechanic employed under this **Contract** in writing of the prevailing rate of wages for their particular job classification. Such notification shall be given to every worker, laborer, and mechanic on their first pay stub and with every pay stub thereafter; and

37.6.4 **Site** Laminated Identification Badges: The **Contractor** shall provide laminated identification badges which include a photograph of the worker's, laborer's or mechanic's face and indicate the worker's, laborer's or mechanic's name, trade, employer's name, and employment starting date (month/day/year). Further, the **Contractor** shall require as acondition of employment on the **Site**, that each and every worker, laborer or mechanic wear the laminated identification badge at all times and that it may be seen by any representative of the **City**. The **Commissioner** may grant a written waiver from the requirement that the laminated identification badge include a photograph if the **Contractor** demonstrates that the identity of an individual wearing a laminated identification badge can be easily verified by another method; and

37.6.5 Language Other Than English Used On **Site**: Provide the **ACCO** notice when three (3) or more employees (worker and/or laborer and/or mechanic) on the **Site**, at any time, speak a language other than English. The **ACCO** will then provide the **Contractor** the notices described in Article 37.6.1 in that language or languages as may be required. The **Contractor** is responsible for all distributions under this Article 37; and

37.6.6 Provision of Records: The **Contractor** and **Subcontractor(s)** shall produce within five (5) **Days** on the **Site** of the **Work** and upon a written order of the **Engineer**, the **Commissioner**, the **ACCO**, the **Agency EAO**, or the **Comptroller,** such records as are required to be kept by this Article 37.6; and

37.6.7 The **Contractor** and **Subcontractor(s)** shall pay employees by check or direct deposit. If this **Contract** is for an amount greater than one million ($1,000,000) dollars, checks issued by the **Contractor** to covered employees shall be generated by a payroll service or automated payroll system (an in-house system may be used if approved by the **Agency**). For any subcontract for an amount greater than seven hundred fifty thousand ($750,000) dollars, checks issued by a **Subcontractor** to covered employees shall be generated by a payroll service or automated payroll system (an in-house system may be usedif approved by the **Agency**); and

37.6.8 The failure of the **Contractor** or **Subcontractor(s)** to comply with the provisions of Articles 37.6.1 through 37.6.7 may result in the **Commissioner** declaring the **Contractor** in default and/or the withholding of payments otherwise due under the **Contract**.

37.7 The **Contractor** and its **Subcontractors** shall keep such employment and payroll records as are required by Section 220 of the Labor Law. The failure of the **Contractor** or **Subcontractor(s)** to comply with the provisions of this Article 37.7 may result in the **Commissioner** declaring the **Contractor** in default and/or the withholding of payments otherwise due under the **Contract.**

37.8 At the time the **Contractor** makes application for each partial payment and for final payment, the **Contractor** shall submit to the **Commissioner** a written payroll certification, in the form provided by this **Contract**, of compliance with the prevailing wage, minimum wage, and other provisions and stipulations required by Labor Law Section 220 and of compliance with the training requirements of Labor Law Section 220-h set forth in Article 35.2. This certification of compliance shall be a condition precedent to payment and no payment shall be made to the **Contractor** unless and until each such certification shall have been submitted to and received by the **Commissioner**.

37.9 This **Contract** is executed by the **Contractor** with the express warranty and representation that the **Contractor** is not disqualified under the provisions of Section 220 of the Labor Law from the award of the **Contract**.

37.10 Any breach or violation of any of the foregoing shall be deemed a breach or violation of a material provision of this **Contract**, and grounds for cancellation thereof by the **City**.

ARTICLE 38. PAYROLL REPORTS

38.1 The **Contractor** and its **Subcontractor(s)** shall maintain on the **Site** during the performanceof the **Work** the original payrolls or transcripts thereof which the **Contractor** and its **Subcontractor(s)** are required to maintain and shall submit such original payrolls or transcripts, subscribed and affirmed by it as true, within thirty (30) **Days** after issuance of its first payroll, and every thirty (30) **Days** thereafter, pursuant to Labor Law Section 220(3-a)(a)(iii). The **Contractor** and **Subcontractor(s)** shall submit such original payrolls or transcripts along with each and every payment requisition. If payment requisitions are not submitted at least once a month, the **Contractor** and its **Subcontractor(s)** shall submit original payrolls and transcripts both along with its payment requisitions and independently of its payment requisitions.

38.2 The **Contractor** shall maintain payrolls or transcripts thereof for six (6) years from the date of completion of the **Work** on this **Contract**. If such payrolls and transcripts are maintained outside of New York City after the completion of the **Work** and their production is required pursuant to this Article 38, the **Contractor** shall produce such records in New York City upon request by the City.

38.3 The **Contractor** and **Subcontractor(s)** shall comply with any written order, direction, or request made by the **Engineer**, the **Commissioner**, the **ACCO**, the **Agency EAO**, the **Agency Labor Law**

Investigator(s), or the **Comptroller**, to provide to the requesting party any of the following information and/or records within five (5) **Days** of such written order, direction, or request:

38.3.1 Such original payrolls or transcripts thereof subscribed and affirmed by it as true and the statements signed by each worker pursuant to this Chapter VIII; and/or

38.3.2 Attendance sheets for each **Day** on which any employee of the **Contractor** and/or any of the **Subcontractor(s)** performed **Work** on the **Site**, which attendance sheet shall be in a form acceptable to the **Agency** and shall provide information acceptable to the **Agency** to identify each such employee; and/or

38.3.3 Any other information to satisfy the **Engineer**, the **Commissioner**, the **ACCO**, the **Agency EAO**, the **Agency Labor Law Investigator(s)** or the **Comptroller**, that this Chapter VIII and the Labor Law, as to the hours of employment and prevailing rates of wages and/or supplemental benefits, are being observed.

38.4 The failure of the **Contractor** or **Subcontractor(s)** to comply with the provisions of Articles 38.1 and/or 38.2 may result in the **Commissioner** declaring the **Contractor** in default and/or the withholding of payments otherwise due under the **Contract**.

ARTICLE 39. DUST HAZARDS

39.1 Should a harmful dust hazard be created in performing the **Work** of this **Contract**, for the elimination of which appliances or methods have been approved by the Board of Standards and Appeals of the City of New York, such appliances and methods shall be installed, maintained, and effectively operated during the continuance of such harmful dust hazard. Failure to comply with this provision after notice shall make this **Contract** voidable at the sole discretion of the **City**.

CHAPTER IX: PARTIAL AND FINAL PAYMENTS

ARTICLE 40. CONTRACT PRICE

40.1 The **City** shall pay, and the **Contractor** agrees to accept, in full consideration for the **Contractor's** performance of the **Work** subject to the terms and conditions hereof, the lump sum priceor unit prices for which this **Contract** was awarded, plus the amount required to be paid for any **Extra Work** ordered by the **Commissioner** under Article 25, less credit for any **Work** omitted pursuant to Article 29.

ARTICLE 41. BID BREAKDOWN ON LUMP SUM

41.1 Within fifteen (15) **Days** after the commencement date specified in the **Notice to Proceed** or **Order to Work**, unless otherwise directed by the **Resident Engineer**, the **Contractor** shall submitto the **Resident Engineer** a breakdown of its bid price, or of lump sums bid for items of the **Contract**, showing the various operations to be performed under the **Contract**, as directed in the progress schedule required under Article 9, and the value of each of such operations, the total of such items to equal the lump sum price bid. Said breakdown must be approved in writing by the **Resident Engineer**.

41.2 No partial payment will be approved until the **Contractor** submits a bid breakdown that is acceptable to the **Resident Engineer**.

41.3 The **Contractor** shall also submit such other information relating to the bid breakdown as directed by the **Resident Engineer**. Thereafter, the breakdown may be used only for checking the **Contractor's** applications for partial payments hereunder, but shall not be binding upon the **City**, the **Commissioner**, or the **Engineer** for any purpose whatsoever.

ARTICLE 42. PARTIAL PAYMENTS

42.1 From time to time as the **Work** progresses satisfactorily, but not more often than once each calendar month (except where the **Commissioner** approves in writing the submission of invoices on a more frequent basis and for invoices relating to **Work** performed pursuant to a change order), the **Contractor** may submit to the **Engineer** a requisition for a partial payment in the prescribed form, which shall contain an estimate of the quantity and the fair value of the **Work** done during the payment period.

42.2 Partial payments may be made for materials, fixtures, and equipment in advance of their actual incorporation in the **Work**, as the **Commissioner** may approve, and upon the terms and conditions set forth in the General Conditions.

42.3 The **Contractor** shall also submit to the **Commissioner** in connection with every application for partial payment a verified statement in the form prescribed by the **Comptroller** setting forth the information required under Labor Law Section 220-a.

42.4 Within thirty (30) **Days** after receipt of a satisfactory payment application, and within sixty (60) **Days** after receipt of a satisfactory payment application in relation to **Work** performed pursuant to a change order, the **Engineer** will prepare and certify, and the **Commissioner** will approve, a voucher for a partial payment in the amount of such approved estimate, less any and all deductions authorized to be made by the **Commissioner** under the terms of this **Contract** or by **Law**.

ARTICLE 43. PROMPT PAYMENT

43.1 The Prompt Payment provisions of the **PPB** Rules in effect at the time of the bid will be applicable to payments made under this **Contract**. The provisions require the payment to the **Contractor** of interest on payments made after the required payment date, except as set forth in the **PPB** Rules.

43.2 The **Contractor** shall submit a proper invoice to receive payment, except where the **Contract** provides that the **Contractor** will be paid at predetermined intervals without having to submit an invoice for each scheduled payment.

43.3 Determination of interest due will be made in accordance with the **PPB** Rules.

43.4 If the **Contractor** is paid interest, the proportionate share(s) of that interest shall be forwarded by the **Contractor** to its **Subcontractor(s)**.

43.5 The **Contractor** shall pay each **Subcontractor** or **Materialman** not later than seven (7) **Days** after receipt of payment out of amounts paid to the **Contractor** by the **City** for **Work** performed by the **Subcontractor** or **Materialman** under this **Contract**.

43.5.1 If **Contractor** fails to make any payment to any **Subcontractor** or **Materialman** within seven (7) **Days** after receipt of payment by the **City** pursuant to this Article 43.5,

then the **Contractor** shall pay interest on amounts due to such **Subcontractor** or **Materialman** at the rate of interest in effect on the date such payment is made by the **Contractor** computed in accordance with Section 756-b (1)(b) of the New York General Business Law. Accrual of interest shall commence on the **Day** immediately following the expiration of the seventh **Day** following receipt of payment by the **Contractor** from the **City** and shall end on the date on which payment is made.

43.6 The **Contractor** shall include in each of its subcontracts a provision requiring each **Subcontractor** to make payment to each of its **Subcontractors** or **Materialmen** for **Work** performed under this **Contract** in the same manner and within the same time period set forth above.

ARTICLE 44. SUBSTANTIAL COMPLETION PAYMENT

44.1 The **Contractor** shall submit with the **Substantial Completion** requisition:

44.1.1 A final verified statement of any pending Article 27 disputes in accordance with the **PPB** Rules and this **Contract** and any and all alleged claims against the **City**, in any way connected with or arising out of this **Contract** (including those as to which details may have been furnished pursuant to Articles 11, 27, 28, and 30) setting forth with respect to each such claim the total amount thereof, the various items of labor and materials included therein, and the alleged value of each item; and if the alleged claim be one for delay, the alleged cause of each such delay, the period or periods of time, giving the dates when the **Contractor** claims the performance of the **Work** or a particular part thereof was delayed,and an itemized statement and breakdown of the amount claimed for each such delay.

44.1.1(a) With respect to each such claim, the **Commissioner**, the **Comptroller** and, in the event of litigation, the **City** Corporation Counsel shall have the same right to inspect, and to make extracts or copies of, the **Contractor's** books, vouchers, records, etc., as is referred to in Articles 11, 27, 28, and 30. Nothing contained in this Article 44.1.1(a) is intended to or shall relieve the **Contractor** from the obligation of complying strictly with Articles 11, 27, 28, and 30. The **Contractor** is warned that unless such claims are completely set forth as herein required, the **Contractor** upon acceptance of the **Substantial Completion** payment pursuant to this Article 44, will have waived any such claims.

44.1.2 A **Final Approved Punch List**.

44.1.3 Where required, a request for an extension of time to achieve **Substantial Completion** or final extension of time.

44.2 The **Commissioner** shall issue a voucher calling for payment of any part or all of the balance due for **Work** performed under the **Contract**, including monies retained under Article 21, less any and all deductions authorized to be made by the **Commissioner**, under this **Contract** or by **Law**, and less twice the amount the **Commissioner** considers necessary to ensure the completion of the balance of the **Work** by the **Contractor**. Such a payment shall be considered a partial and not a final payment. No **Substantial Completion** payment shall be made under this Article 44 where the **Contractor** failed to complete the **Work** within the time fixed for such completion in the Schedule A of the General Conditions, or within the time to which completion may have been extended, until an extension or extensions of time for the completion of **Work** have been acted upon pursuant to Article 13.

44.3 No further partial payments shall be made to the **Contractor** after **Substantial Completion**, except the **Substantial Completion** payment and payment pursuant to any **Contractor's** requisition that were properly filed with the **Commissioner** prior to the date of **Substantial Completion**; however, the **Commissioner** may grant a waiver for further partial payments after the date of **Substantial Completion** to permit payments for change order **Work** and/or release of retainage and deposits pursuant to Articles 21 and 24. Such waiver shall be in writing.

44.4 The **Contractor** acknowledges that nothing contained in this Article 44 is intended to or shall in any way diminish the force and effect of Article 13.

ARTICLE 45. FINAL PAYMENT

45.1 After completion and **Final Acceptance** of the **Work**, the **Contractor** shall submit all required certificates and documents, together with a requisition for the balance claimed to be due under the **Contract**, less the amount authorized to be retained for maintenance under Article 24. Such submission shall be within 90 days of the date of the **Commissioner's** written determination of **Final Acceptance**, or within such additional time as may be granted by the **Commissioner** in writing. If the **Contractor** fails to submit all required certificates and documents within the time allowed, no payment of the balance claimed shall be made to the **Contractor** and the **Contractor** shall be deemed to have forfeited its right to payment of any balance claimed. A verified statement similar to that required in connection with applications for partial payments shall also be submitted to the **Commissioner**.

45.2 Amended Verified Statement of Claims: The **Contractor** shall also submit with the final requisition any amendments to the final verified statement of any pending dispute resolution procedures in accordance with the **PPB** Rules and this **Contract** and any and all alleged claims against the **City**, in any way connected with or arising out of this **Contract** (including those as to which details may have been furnished pursuant to Articles 11, 27, 28, and 30) that have occurred subsequent to **Substantial Completion**, setting forth with respect to each such claim the total amount thereof, the various items of labor and materials included therein, and the alleged value of each such item; and if the alleged claim be one for delay, the alleged cause of each such delay, the period or periods of time, giving the dates when the **Contractor** claims the performance of the **Work** or a particular part thereof was delayed, and an itemized statement and breakdown of the amount claimed for each such delay. With reference to each such claim, the **Commissioner**, the **Comptroller** and, in the event of litigation, the **City** Corporation Counsel shall have the same right to inspect, and to make extracts or copies of, the **Contractor's** books, vouchers, records, etc., as is referred to in Articles 11, 27, 28, and 30. Nothing contained in this Article 45.2, is intended to or shall relieve the **Contractor** from the obligation of complying strictly with Articles 11, 27, 28, and 30. The **Contractor** is warned that unless such claims are completely set forth as herein required, the **Contractor**, upon acceptance of the Final Payment pursuant to Article 46, will have waived any such claims.

45.3 Preparation of Final Voucher: Upon determining the balance due hereunder other than on account of claims, the **Engineer** will prepare and certify, for the Commissioner's approval, a voucher for final payment in that amount less any and all deductions authorized to be made by the **Commissioner** under this **Contract** or by **Law**. In the case of a lump sum **Contract**, the **Commissioner** shall certify the voucher for final payment within thirty (30) **Days** from the date of completion and acceptance of the **Work**, provided all requests for extensions of time have been acted upon.

45.3.1 All prior certificates and vouchers upon which partial payments were made, being merely estimates made to enable the **Contractor** to prosecute the **Work** more advantageously, shall be subject to correction in the final voucher, and the certification of the **Engineer**

thereon and the approval of the **Commissioner** thereof, shall be conditions precedent to the right of the **Contractor** to receive any money hereunder. Such final voucher shall be binding and conclusive upon the **Contractor**.

45.3.2 Payment pursuant to such final voucher, less any deductions authorized to be made by the **Commissioner** under this **Contract** or by **Law**, shall constitute the final payment, and shall be made by the **Comptroller** within thirty (30) **Days** after the filing of such voucher in his/her office.

45.4 The **Contractor** acknowledges that nothing contained in this Article 45 is intended to or shall in any way diminish the force and effect of Article 13.

ARTICLE 46. ACCEPTANCE OF FINAL PAYMENT

46.1 The acceptance by the **Contractor**, or by anyone claiming by or through it, of the final payment, whether such payment be made pursuant to any judgment of any court, or otherwise, shall constitute and operate as a release of the **City** from any and all claims of and liability to the **Contractor** for anything heretofore done or furnished for the **Contractor** relating to or arising out of this **Contract** and the **Work** done hereunder, and for any prior act, neglect or default on the part of the **City** or any of its officials, agents or employees, excepting only a claim against the **City** for the amounts deducted or retained in accordance with the terms and provisions of this **Contract** or by **Law**, and excepting any claims, not otherwise waived, or any pending dispute resolution procedures which are contained in the verified statement filed with the **Contractor's** substantial and final requisitions pursuant to Articles 44and 45.

46.2 The **Contractor** is warned that the execution by it of a release, in connection with the acceptance of the final payment, containing language purporting to reserve claims other than those herein specifically excepted from the operation of this Article 46, or those for amounts deducted by the **Commissioner** from the final requisition or from the final payment as certified by the **Engineer** and approved by the **Commissioner**, shall not be effective to reserve such claims, anything stated to the **Contractor** orally or in writing by any official, agent or employee of the **City** to the contrary notwithstanding.

46.3 Should the **Contractor** refuse to accept the final payment as tendered by the **Comptroller**, it shall constitute a waiver of any right to interest thereon.

46.4 The **Contractor**, however, shall not be barred by this Article 46 from commencing an action for breach of **Contract** to the extent permitted by **Law** and by the terms of the **Contract** for any claims that are contained in the verified statement filed with the **Contractor's** substantial and final requisitions pursuant to Articles 44 and 45 or that arose after submission of the final payment requisition, provided that a detailed and verified statement of claim is served upon the contracting **Agency** and **Comptroller** not later than forty (40) **Days** after the making of such final payment by electronic funds transfer (EFT)or the mailing of such final payment. The statement shall specify the items upon which the claim will be based and any such claim shall be limited to such items.

ARTICLE 47. APPROVAL BY PUBLIC DESIGN COMMISSION

47.1 All works of art, including paintings, mural decorations, stained glass, statues, bas-reliefs, and other sculptures, monuments, fountains, arches, and other structures of a permanent character intendedfor ornament or commemoration, and every design of the same to be used in the performance of this **Contract**, and the design of all bridges, approaches, buildings, gates, fences, lamps, or structures to be erected, pursuant

to the terms of this **Contract**, shall be submitted to the Art Commission, d/b/a the Public Design Commission of the City of New York, and shall be approved by the Public Design Commission prior to the erection or placing in position of the same. The final payment shall not become due or payable under this **Contract** unless and until the Public Design Commission shall certify that the design for the **Work** herein contracted for has been approved by the said Public Design Commission, and that the same has been executed in substantial accordance with the design so approved, pursuant to the provisions of Chapter 37, Section 854 of the **City** Charter, as amended.

CHAPTER X: CONTRACTOR'S DEFAULT

ARTICLE 48. COMMISSIONER'S RIGHT TO DECLARE CONTRACTOR IN DEFAULT

48.1 In addition to those instances specifically referred to in other Articles herein, the **Commissioner** shall have the right to declare the **Contractor** in default of this **Contract** if:

48.1.1 The **Contractor** fails to commence **Work** when notified to do so by the **Commissioner**; or if

48.1.2 The **Contractor** shall abandon the **Work**; or if

48.1.3 The **Contractor** shall refuse to proceed with the **Work** when and as directed by the **Commissioner**; or if

48.1.4 The **Contractor** shall, without just cause, reduce its working force to a number which, if maintained, would be insufficient, in the opinion of the **Commissioner**, to complete the **Work** in accordance with the progress schedule; or if

48.1.5 The **Contractor** shall fail or refuse to increase sufficiently such working force when ordered to do so by the **Commissioner**; or if

48.1.6 The **Contractor** shall sublet, assign, transfer, convert or otherwise dispose of this **Contract** other than as herein specified; or sell or assign a majority interest in the **Contractor**; or if

48.1.7 The **Contractor** fails to secure and maintain all required insurance; or if

48.1.8 A receiver or receivers are appointed to take charge of the **Contractor's** property or affairs; or if

48.1.9 The **Commissioner** shall be of the opinion that the **Contractor** is or has been unnecessarily or unreasonably or willfully delaying the performance and completion of the **Work**, or the award of necessary subcontracts, or the placing of necessary material and equipment orders; or if

48.1.10 The **Commissioner** shall be of the opinion that the **Contractor** is or has been willfully or in bad faith violating any of the provisions of this **Contract**; or if

48.1.11 The **Commissioner** shall be of the opinion that the **Work** cannot be completed within the time herein provided therefor or within the time to which such completion may have been extended; provided, however, that the impossibility of timely completion is, in the

Commissioner's opinion, attributable to conditions within the **Contractor's** control; orif

48.1.12 The **Work** is not completed within the time herein provided therefor or within the time to which the **Contractor** may be entitled to have such completion extended; or if

48.1.13 Any statement or representation of the **Contractor** in the **Contract** or in any document submitted by the **Contractor** with respect to the **Work**, the **Project**, or the **Contract** (or for purposes of securing the **Contract**) was untrue or incorrect when made; or if

48.1.14 The **Contractor** or any of its officers, directors, partners, five (5%) percent shareholders, principals, or other persons substantially involved in its activities, commits any of the acts or omissions specified as the grounds for debarment in the **PPB** Rules.

48.2 Before the **Commissioner** shall exercise his/her right to declare the **Contractor** in default, the **Commissioner** shall give the **Contractor** an opportunity to be heard, upon not less than two (2) **Days**' notice.

ARTICLE 49. EXERCISE OF THE RIGHT TO DECLARE DEFAULT

49.1 The right to declare the **Contractor** in default for any of the grounds specified or referred to in Article 48 shall be exercised by sending the **Contractor** a notice, signed by the **Commissioner**, setting forth the ground or grounds upon which such default is declared (hereinafter referred to as a "Notice of Default").

49.2 The **Commissioner's** determination that the **Contractor** is in default shall be conclusive, final, and binding on the parties and such a finding shall preclude the **Contractor** from commencing a plenary action for any damages relating to the **Contract**. If the **Contractor** protests the determination of the **Commissioner**, the **Contractor** may commence an action in a court of competent jurisdiction of the State of New York under Article 78 of the New York Civil Practice Law and Rules.

ARTICLE 50. QUITTING THE SITE

50.1 Upon receipt of such notice the **Contractor** shall immediately discontinue all further operations under this **Contract** and shall immediately quit the **Site**, leaving untouched all plant, materials, equipment, tools, and supplies then on the **Site**.

ARTICLE 51. COMPLETION OF THE WORK

51.1 The **Commissioner**, after declaring the **Contractor** in default, may then have the **Work** completed by such means and in such manner, by contract with or without public letting, or otherwise, as he/she may deem advisable, utilizing for such purpose such of the **Contractor's** plant, materials, equipment, tools, and supplies remaining on the **Site**, and also such **Subcontractors**, as he/she may deem advisable.

51.2 After such completion, the **Commissioner** shall make a certificate stating the expense incurred in such completion, which shall include the cost of re-letting and also the total amount of liquidated damages (at the rate provided for in the **Contract**) from the date when the **Work** should have been completed by the **Contractor** in accordance with the terms hereof to the date of actual completion of the **Work**. Such certificate shall be binding and conclusive upon the **Contractor**, its sureties, and any person claiming under the **Contractor**, as to the amount thereof.

51.3 The expense of such completion, including any and all related and incidental costs, as so certified by the **Commissioner**, and any liquidated damages assessed against the **Contractor**, shall be charged against and deducted out of monies which are earned by the **Contractor** prior to the date of default. Should the expense of such completion, as certified by the **Commissioner**, exceed the total sum which would have been payable under the **Contract** if it had been completed by the **Contractor**, any excess shall be paid by the **Contractor**.

ARTICLE 52. PARTIAL DEFAULT

52.1 In case the **Commissioner** shall declare the **Contractor** in default as to a part of the **Work** only, the **Contractor** shall discontinue such part, shall continue performing the remainder of the **Work**in strict conformity with the terms of this **Contract**, and shall in no way hinder or interfere with any **Other Contractor(s)** or persons whom the **Commissioner** may engage to complete the **Work** as to which the **Contractor** was declared in default.

52.2 The provisions of this Chapter relating to declaring the **Contractor** in default as to the entire **Work** shall be equally applicable to a declaration of partial default, except that the **Commissioner** shallbe entitled to utilize for completion of the part of the **Work** as to which the **Contractor** was declared in default only such plant, materials, equipment, tools, and supplies as had been previously used by the **Contractor** on such part.

ARTICLE 53. PERFORMANCE OF UNCOMPLETED WORK

53.1 In completing the whole or any part of the **Work** under the provisions of this Chapter X, the **Commissioner** shall have the power to depart from or change or vary the terms and provisions of this **Contract**, provided, however, that such departure, change or variation is made for the purpose ofreducing the time or expense of such completion. Such departure, change or variation, even to the extent of accepting a lesser or different performance, shall not affect the conclusiveness of the **Commissioner's** certificate of the cost of completion referred to in Article 51, nor shall it constitute a defense to an action to recover the amount by which such certificate exceeds the amount which would have been payable to the **Contractor** hereunder but for its default.

ARTICLE 54. OTHER REMEDIES

54.1 In addition to the right to declare the **Contractor** in default pursuant to this Chapter X, the **Commissioner** shall have the absolute right, in his/her sole discretion and without a hearing, to complete or cause to be completed in the same manner as described in Articles 51 and 53, any or all unsatisfactory or uncompleted punch list **Work** that remains after the completion date specified in the **Final Approved Punch List**. A written notice of the exercise of this right shall be sent to the **Contractor** who shall immediately quit the **Site** in accordance with the provisions of Article 50.

54.2 The expense of completion permitted under Article 54.1, including any and all related and incidental costs, as so certified by the **Commissioner**, shall be charged against and deducted out of monies which have been earned by the **Contractor** prior to the date of the exercise of the right set forthin Article 54.1; the balance of such monies, if any, subject to the other provisions of this **Contract**, to be paid to the **Contractor** without interest after such completion. Should the expense of such completion,as certified by

the **Commissioner**, exceed the total sum which would have been payable under the **Contract** if it had been completed by the **Contractor**, any excess shall be paid by the **Contractor**.

54.3 The previous provisions of this Chapter X shall be in addition to any and all other remedies available under **Law** or in equity.

54.4 The exercise by the **City** of any remedy set forth herein shall not be deemed a waiver by the **City** of any other legal or equitable remedy contained in this **Contract** or provided under **Law**.

CHAPTER XI: MISCELLANEOUS PROVISIONS

ARTICLE 55. CONTRACTOR'S WARRANTIES

55.1 In consideration of, and to induce, the award of this **Contract** to the **Contractor**, the **Contractor** represents and warrants:

55.1.1 That it is financially solvent, sufficiently experienced and competent to performthe **Work**; and

55.1.2 That the facts stated in its bid and the information given by it pursuant to the Information for Bidders is true and correct in all respects; and

55.1.3 That it has read and complied with all requirements set forth in the **Contract**.

ARTICLE 56. CLAIMS AND ACTIONS THEREON

56.1 Any claim, that is not subject to dispute resolution under the **PPB** Rules or this **Contract**, against the **City** for damages for breach of **Contract** shall not be made or asserted in any action, unless the **Contractor** shall have strictly complied with all requirements relating to the giving of notice and of information with respect to such claims, as herein before provided.

56.2 Nor shall any action be instituted or maintained on any such claims unless such action is commenced within six (6) months after **Substantial Completion**; except that:

56.2.1 Any claims arising out of events occurring after **Substantial Completion** and before **Final Acceptance** of the **Work** shall be asserted within six (6) months of **Final Acceptance** of the **Work**;

56.2.2 If the **Commissioner** exercises his/her right to complete or cause to complete any or all unsatisfactory or uncompleted punch list **Work** that remains after the completion date specified in the **Final Approved Punch List** pursuant to Article 54, any such action shall be commenced within six (6) months from the date the **Commissioner** notifies the **Contractor** in writing that he/she has exercised such right. Any claims for monies deducted, retained or withheld under the provisions of this **Contract** shall be assertedwithin six (6) months after the date when such monies otherwise become due and payable hereunder; and

56.2.3 If the **Commissioner** exercises his/her right to terminate the **Contract** pursuant to Article 64, any such action shall be commenced within six (6) months of the date the **Commissioner** exercises said right.

ARTICLE 57. INFRINGEMENT

57.1 The **Contractor** shall be solely responsible for and shall defend, indemnify, and hold the **City** harmless from any and all claims (even if the allegations of the lawsuit are without merit) and judgments for damages and from costs and expenses to which the **City** may be subject to or which it may suffer or incur allegedly arising out of or in connection with any infringement by the **Contractor** of any copyright, trade secrets, trademark or patent rights or any other property or personal right of any third party by the **Contractor** and/or its **Subcontractors** in the performance or completion of the **Work**. Insofar as thefacts or **Law** relating to any claim would preclude the **City** from being completely indemnified by the **Contractor**, the **City** shall be partially indemnified by the **Contractor** to the fullest extent permitted by **Law**.

ARTICLE 58. NO CLAIM AGAINST OFFICIALS, AGENTS OR EMPLOYEES

58.1 No claim whatsoever shall be made by the **Contractor** against any official, agent or employeeof the **City** for, or on account of, anything done or omitted to be done in connection with this **Contract**.

ARTICLE 59. SERVICE OF NOTICES

59.1 The **Contractor** hereby designates the business address, fax number, and email addressspecified in its bid, as the place where all notices, directions or other communications to the **Contractor** may be delivered, or to which they may be mailed. Any notice, direction, or communication from either party to the other shall be in writing and shall be deemed to have been given when (i) delivered personally; (ii) sent by certified mail, return receipt requested; (iii) delivered by overnight or same day courier service in a properly addressed envelope with confirmation; or (iv) sent by fax or email and,unless receipt of the fax or e-mail is acknowledged by the recipient by fax or e-mail, deposited in a post office box regularly maintained by the United States Postal Service in a properly addressed, postage pre- paid envelope.

59.2 **Contractor's** notice address, email address, or fax number may be changed at any time by an instrument in writing, executed and acknowledged by the **Contractor**, and delivered to the**Commissioner**.

59.3 Nothing herein contained shall, however, be deemed to preclude or render inoperative the service of any notice, direction or other communication upon the **Contractor** personally, or, if the **Contractor** is a corporation, upon any officer thereof.

ARTICLE 60. UNLAWFUL PROVISIONS DEEMED STRICKEN FROM CONTRACT

60.1 If this **Contract** contains any unlawful provision not an essential part of the **Contract** and which shall not appear to have been a controlling or material inducement to the making thereof, the same shall be deemed of no effect and shall, upon notice by either party, be deemed stricken from the **Contract** without affecting the binding force of the remainder.

ARTICLE 61. ALL LEGAL PROVISIONS DEEMED INCLUDED

61.1 It is the intent and understanding of the parties to this **Contract** that each and every provision of **Law** required to be inserted in this **Contract** shall be and is inserted herein. Furthermore, it is hereby stipulated that every such provision is to be deemed to be inserted herein, and if, through mistake or otherwise, any such provision is not inserted, or is not inserted in correct form, then this **Contract** shall forthwith upon the application of either party be amended by such insertion so as to comply strictly with the **Law** and without prejudice to the rights of either party hereunder.

ARTICLE 62. TAX EXEMPTION

62.1 The **City** is exempt from payment of Federal, State, and local taxes, including sales and compensating use taxes of the State of New York and its cities and counties on all tangible personal property sold to the **City** pursuant to the provisions of this **Contract**. These taxes are not to be included in bids. However, this exemption does not apply to tools, machinery, equipment or other property leased by or to the **Contractor**, **Subcontractor** or **Materialman** or to tangible personal property which, even though it is consumed, is not incorporated into the completed **Work** (consumable supplies) and tangible personal property that the **Contractor** is required to remove from the **Site** during or upon completion of the **Work**. The **Contractor** and its **Subcontractors** and **Materialmen** shall be responsible for and pay any and all applicable taxes, including sales and compensating use taxes, on such leased tools, machinery, equipment or other property and upon all such consumable supplies and tangible personal property that the **Contractor** is required to remove from the **Site** during or upon completion of the **Work**.

62.2 The **Contractor** agrees to sell and the **City** agrees to purchase all tangible personal property, other than consumable supplies and other tangible personal property that the **Contractor** is required to remove from the **Site** during or upon completion of the **Work**, that is required, necessary or proper for or incidental to the construction of the **Project** covered by this **Contract**. The sum paid under this **Contract** for such tangible personal property shall be in full payment and consideration for the sale of such tangible personal property.

> 62.2.1 The **Contractor** agrees to construct the **Project** and to perform all **Work**, labor and services rendered, necessary, proper or incidental thereto for the sum shown in the bid forthe performance of such **Work**, labor, and services, and the sum so paid pursuant to this **Contract** for such **Work**, labor, and services, shall be in full consideration for the performance by the **Contractor** of all its duties and obligations under this **Contract** in connection with said **Work,** labor, and services.

62.3 20 NYCRR Section 541.3(d) provides that a **Contractor**'s purchases of tangible personal property that is either incorporated into real property owned by a governmental entity or purchased for and sold to a governmental entity are exempt from sales and use tax. The **City** shall not pay sales tax for any such tangible personal property that it purchases from the **Contractor** pursuant to the **Contract.** With respect to such tangible personal property, the **Contractor**, at the request of the **City**, shall furnish to the **City** such bills of sale and other instruments as may be required by the **City**, properly executed, acknowledged and delivered assuring to the **City** title to such tangible personal property, free of liens and/or encumbrances, and the **Contractor** shall mark or otherwise identify all such tangible personal property as the property of the **City**.

62.4 Title to all tangible personal property to be sold by the **Contractor** to the **City** pursuant to the provisions of the **Contract** shall immediately vest in and become the sole property of the **City** upon delivery of such tangible personal property to the **Site**. Notwithstanding such transfer of title, the **Contractor** shall

have the full and continuing responsibility to install such tangible personal property in accordance with the provisions of this **Contract**, protect it, maintain it in a proper condition and forthwith repair, replace and make good any damage thereto, theft or disappearance thereof, and furnish additional tangible personal property in place of any that may be lost, stolen or rendered unusable, without cost to the **City**, until such time as the **Work** covered by the **Contract** is fully accepted by the **City**. Such transfer of title shall in no way affect any of the **Contractor's** obligations hereunder. In the event that, after title has passed to the **City**, any of the tangible personal property is rejected as being defective or otherwise unsatisfactory, title to all such tangible personal property shall be deemed to have been transferred back to the **Contractor**.

62.5 The purchase by **Subcontractors** or **Materialmen** of tangible personal property to be sold hereunder shall be a purchase or procurement for resale to the **Contractor** (either directly or through other **Subcontractors**) and therefore not subject to the aforesaid sales and compensating use taxes, provided that the subcontracts and purchase agreements provide for the resale of such tangible personal property and that such subcontracts and purchase agreements are in a form similar to this **Contract** with respect to the separation of the sale of consumable supplies and tangible personal property that the **Contractor** is required to remove from the **Site** during or upon completion of the **Work** from the **Work** and labor, services, and any other matters to be provided, and provided further that the subcontracts and purchase agreements provide separate prices for tangible personal property and all other services and matters. Such separation shall actually be followed in practice, including the separation of payments for tangible personal property from the payments for other **Work** and labor and other things to be provided.

62.6 The **Contractor** and its **Subcontractors** and **Materialmen** shall furnish a **Contractor** Exempt Purchase Certificate to all persons, firms or corporations from which they purchase tangible personal property for the performance of the **Work** covered by this **Contract**.

62.7 In the event any of the provisions of this Article 62 shall be deemed to be in conflict with any other provisions of this **Contract** or create any ambiguity, then the provisions of this Article 62 shall control.

ARTICLE 63. INVESTIGATION(S) CLAUSE

63.1 The parties to this **Contract** agree to cooperate fully and faithfully with any investigation, audit or inquiry conducted by a United States, a State of New York (State) or a **City** governmental agency or authority that is empowered directly or by designation to compel the attendance of witnesses and to examine witnesses under oath, or conducted by the Inspector General of a governmental agency that is a party in interest to the transaction, submitted bid, submitted proposal, contract, lease, permit or license that is the subject of the investigation, audit or inquiry.

63.2 If any person who has been advised that his/her statement, and any information from such statement, will not be used against him/her in any subsequent criminal proceeding refuses to testify before a grand jury or other governmental agency or authority empowered directly or by designation to compel the attendance of witnesses and to examine witnesses under oath concerning the award of or performance under any transaction, agreement, lease, permit, contract, or license entered into with the **City**, the State, or any political subdivision or public authority thereof, or the Port Authority of NewYork and New Jersey, or any local development corporation within the **City**, or any public benefit corporation organized under the **Laws** of the State of New York, or;

63.3 If any person refuses to testify for a reason other than the assertion of his/her privilege against self incrimination in an investigation, audit or inquiry conducted by a **City** or State governmental agency or authority empowered directly or by designation to compel the attendance of witnesses and to take testimony under oath, or by the Inspector General of the governmental agency that is a party in interestin, and is

seeking testimony concerning the award of, or performance under any transaction, agreement, lease, permit, contract, or license entered into with the **City**, the State, or any political subdivision thereof or any local development corporation within the **City**, then;

63.4 The **Commissioner** whose **Agency** is a party in interest to the transaction, submitted bid, submitted proposal, contract, lease, permit, or license shall convene a hearing, upon not less than five (5) **Days**' written notice to the parties involved to determine if any penalties should attach for the failure of a person to testify.

63.5 If any non-governmental party to the hearing requests an adjournment, the **Commissioner** who convened the hearing may, upon granting the adjournment, suspend any contract, lease, permit, or license, pending the final determination pursuant to Article 63.7 without the **City** incurring any penalty or damages for delay or otherwise.

63.6 The penalties which may attach after a final determination by the **Commissioner** may include but shall not exceed:

63.6.1 The disqualification for a period not to exceed five (5) years from the date of an adverse determination for any person, or any entity of which such person was a member at the time the testimony was sought, from submitting bids for, or transacting business with, or entering into or obtaining any contract, lease, permit or license with or from the **City**; and/or

63.6.2 The cancellation or termination of any and all such existing **City** contracts, leases, permits or licenses that the refusal to testify concerns and that have not been assigned as permitted under this **Contract**, nor the proceeds of which pledged, to an unaffiliated and unrelated institutional lender for fair value prior to the issuance of the notice scheduling the hearing, without the **City** incurring any penalty or damages on account of such cancellation or termination; monies lawfully due for goods delivered, work done, rentals, or fees accrued prior to the cancellation or termination shall be paid by the **City**.

63.7 The **Commissioner** shall consider and address in reaching his/her determination and inassessing an appropriate penalty the factors in Articles 63.7.1 and 63.7.2. The **Commissioner** may also consider, if relevant and appropriate, the criteria established in Articles 63.7.3 and 63.7.4, in addition to any other information which may be relevant and appropriate:

63.7.1 The party's good faith endeavors or lack thereof to cooperate fully and faithfully with any governmental investigation or audit, including but not limited to the discipline, discharge, or disassociation of any person failing to testify, the production of accurate and complete books and records, and the forthcoming testimony of all other members, agents, assignees or fiduciaries whose testimony is sought.

63.7.2 The relationship of the person who refused to testify to any entity that is a party tothe hearing, including but not limited to, whether the person whose testimony is sought has an ownership interest in the entity and/or the degree of authority and responsibility theperson has within the entity.

63.7.3 The nexus of the testimony sought to the subject entity and its contracts, leases, permits or licenses with the **City**.

63.7.4 The effect a penalty may have on an unaffiliated and unrelated party or entity thathas a significant interest in an entity subject to penalties under Article 63.6, provided that the party

or entity has given actual notice to the **Commissioner** upon the acquisition of the interest, or at the hearing called for in Article 63.4, gives notice and proves that such interest was previously acquired. Under either circumstance the party or entity shall present evidence at the hearing demonstrating the potential adverse impact a penalty will have on such person or entity.

63.8 Definitions:

63.8.1 The term "license" or "permit" as used in this Article 63 shall be defined as a license, permit, franchise or concession not granted as a matter of right.

63.8.2 The term "person" as used in this Article 63 shall be defined as any natural person doing business alone or associated with another person or entity as a partner, director, officer, principal or employee.

63.8.3 The term "entity" as used in this Article 63 shall be defined as any firm, partnership, corporation, association, joint venture, or person that receives monies, benefits, licenses, leases, or permits from or through the **City** or otherwise transacts business with the **City**.

63.8.4 The term "member" as used in this Article 63 shall be defined as any person associated with another person or entity as a partner, director, officer, principal or employee.

63.9 In addition to and notwithstanding any other provision of this **Contract**, the **Commissioner** may in his/her sole discretion terminate this **Contract** upon not less than three (3) **Days'** written notice in the event the **Contractor** fails to promptly report in writing to the **Commissioner** of the Department of Investigations ("DOI") of the **City** any solicitation of money, goods, requests for future employment or other benefit or thing of value, by or on behalf of any employee of the **City** or other person, firm, corporation or entity for any purpose which may be related to the procurement or obtaining of this **Contract** by the **Contractor**, or affecting the performance of this **Contract**.

ARTICLE 64. TERMINATION BY THE CITY

64.1 In addition to termination pursuant to any other article of this **Contract**, the **Commissioner** may, at any time, terminate this **Contract** by written notice to the **Contractor**. In the event of termination, the **Contractor** shall, upon receipt of such notice, unless otherwise directed by the **Commissioner**:

64.1.1 Stop **Work** on the date specified in the notice;

64.1.2 Take such action as may be necessary for the protection and preservation of the **City's** materials and property;

64.1.3 Cancel all cancelable orders for material and equipment;

64.1.4 Assign to the **City** and deliver to the **Site** or another location designated by the **Commissioner**, any non-cancelable orders for material and equipment that is not capable of use except in the performance of this **Contract** and has been specifically fabricated for the sole purpose of this **Contract** and not incorporated in the **Work**;

64.1.5 Take no action which will increase the amounts payable by the **City** under this
64.1.5 **Contract**.

64.2 In the event of termination by the **City** pursuant to this Article 64, payment to the **Contractor** shall be in accordance with Articles 64.2.1, 64.2.2 or 64.2.3, to the extent that each respective article applies.

64.2.1 Lump Sum Contracts or Items: On all lump sum **Contracts**, or on lump sum items in a **Contract**, the **City** will pay the **Contractor** the sum of the amounts described in Articles 64.2.1(a) and 64.2.1(b), less all payments previously made pursuant to this **Contract**. On lump sum **Contracts** only, the **City** will also pay the **Contractor** an additional sum as provided in Article 64.2.1(c).

64.2.1(a) For **Work** completed prior to the notice of termination, the **Contractor** shall be paid a pro rata portion of the lump sum bid amount, plus approved change orders, based upon the percent completion of the **Work**, as determined by the **Commissioner**. For the purpose of determining the pro rata portion of the lump sum bid amount to which the **Contractor** is entitled, the bid breakdown submitted in accordance with Article 41 shall be considered, but shall not be dispositive. The **Commissioner's** determination hereunder shall be final, binding, and conclusive.

64.2.1(b) For non-cancelable material and equipment that is not capable of use except in the performance of this **Contract** and has been specifically fabricated for the sole purpose of this **Contract**, but not yet incorporated in the **Work**, the **Contractor** shall be paid the lesser of the following, less salvage value:

64.2.1(b)(i) The Direct Cost, as defined in Article 64.2.4; or

64.2.1(b)(ii) The fair and reasonable value, if less than Direct Cost, of such material and equipment, plus necessary and reasonable delivery costs.

64.2.1(b)(iii) In addition, the **Contractor** shall be paid five (5%) percent of the amount described in Article 64.2.1(b)(i) or Article 64.2.1(b)(ii), whichever applies.

64.2.1(c) Except as otherwise provided in Article 64.2.1(d), on all lump sum **Contracts**, the **Contractor** shall be paid the percentage indicated below applied tothe difference between the total lump sum bid amount and the total of all payments made prior to the notice of termination plus all payments allowed pursuant to Articles 64.2.1(a) and 64.2.1(b):

64.2.1(c)(i) Five (5%) percent of the first five million ($5,000,000) dollars; and

64.2.1(c)(ii) Three (3%) percent of any amount between five million ($5,000,000) dollars and fifteen million ($15,000,000) dollars; plus

64.2.1(c)(iii) One (1%) percent of any amount over fifteen million ($15,000,000) dollars.

64.2.1(d) In the event the **City** terminates a lump sum **Contract** pursuant to this Article 64 within ninety (90) **Days** after registration of the **Contract** with the **Comptroller**, the **Contractor** shall be paid one (1%) percent of the difference between the lump sum bid amount and the total of all payments made pursuant to this Article 64.2.

64.2.2 Unit Price Contracts or Items: On all unit price **Contracts**, or on unit price items ina

Contract, the **City** will pay the **Contractor** the sum of the amounts described in Articles 64.2.2(a) and 64.2.2(b), less all payments previously made pursuant to this **Contract**:

64.2.2(a) For all completed units, the unit price stated in the **Contract**, and

64.2.2(b) For units that have been ordered but are only partially completed, the **Contractor** will be paid:

64.2.2(b)(i) A pro rata portion of the unit price stated in the **Contract** based upon the percent completion of the unit and

64.2.2(b)(ii) For non-cancelable material and equipment, payment willbe made pursuant to Article 64.2.1(b).

64.2.3 Time and Materials Contracts or Items Based on Time and Material Records: On all **Contracts** or items in a **Contract** where payment for the **Work** is based on time and material records, the **Contractor** shall be paid in accordance with Article 26, less all payments previously made pursuant to this **Contract**.

64.2.4 Direct Costs: Direct Costs as used in this Article 64.2 shall mean:

64.2.4(a) The actual purchase price of material and equipment, plus necessary and reasonable delivery costs,

64.2.4(b) The actual cost of labor involved in construction and installation at the **Site**, and

64.2.4(c) The actual cost of necessary bonds and insurance purchased pursuant to requirements of this **Contract** less any amounts that have been or should be refunded by the **Contractor's** sureties or insurance carriers.

64.2.4(d) Direct Costs shall not include overhead.

64.3 In no event shall any payments under this Article 64 exceed the **Contract** price for such items.

64.4 All payments pursuant to Article 64 shall be in the nature of liquidated damages and shall be accepted by the **Contractor** in full satisfaction of all claims against the **City**.

64.5 The **City** may deduct or set off against any sums due and payable pursuant to this Article 64, any deductions authorized by this **Contract** or by **Law** (including but not limited to liquidated damages) and any claims it may have against the **Contractor**. The **City's** exercise of the right to terminate the **Contract** pursuant to this Article 64 shall not impair or otherwise effect the **City's** right to assert any claims it may have against the **Contractor** in a plenary action.

64.6 Where the **Work** covered by the **Contract** has been substantially completed, as determined in writing by the **Commissioner**, termination of the **Work** shall be handled as an omission of **Work** pursuant to Articles 29 and 33, in which case a change order will be issued to reflect an appropriate reduction in the **Contract** sum, or if the amount is determined after final payment, such amount shall be paid by the **Contractor**.

ARTICLE 65. CHOICE OF LAW, CONSENT TO JURISDICTION AND VENUE

65.1 This **Contract** shall be deemed to be executed in the **City** regardless of the domicile of the **Contractor**, and shall be governed by and construed in accordance with the **Laws** of the State of New York and the **Laws** of the United States, where applicable.

65.2 The parties agree that any and all claims asserted against the **City** arising under this **Contract** or related thereto shall be heard and determined in the courts of the State of New York ("New York State Courts") located in the **City** and County of New York. To effect this **Contract** and intent, the **Contractor** agrees:

65.2.1 If the **City** initiates any action against the **Contractor** in Federal court or in a New York State Court, service of process may be made on the **Contractor** either in person, wherever such **Contractor** may be found, or by registered mail addressed to the **Contractor** at its address as set forth in this **Contract**, or to such other address as the **Contractor** may provide to the **City** in writing; and

65.2.2 With respect to any action between the **City** and the **Contractor** in a New York State Court, the **Contractor** hereby expressly waives and relinquishes any rights it might otherwise have:

65.2.2(a) To move to dismiss on grounds of forum non conveniens;

65.2.2(b) To remove to Federal Court; and

65.2.2(c) To move for a change of venue to a New York State Court outside New York County.

65.2.3 With respect to any action brought by the **City** against the **Contractor** in a Federal Court located in the **City**, the **Contractor** expressly waives and relinquishes any right it might otherwise have to move to transfer the action to a Federal Court outside the **City**.

65.2.4 If the **Contractor** commences any action against the **City** in a court located other than in the **City** and County of New York, upon request of the **City**, the **Contractor** shall either consent to a transfer of the action to a New York State Court of competent jurisdiction located in the **City** and County of New York or, if the Court where the action is initially brought will not or cannot transfer the action, the **Contractor** shall consent to dismiss such action without prejudice and may thereafter reinstate the action in a New York State Court of competent jurisdiction in New York County.

65.3 If any provision(s) of this Article 65 is held unenforceable for any reason, each and all other provision(s) shall nevertheless remain in full force and effect.

ARTICLE 66. PARTICIPATION IN AN INTERNATIONAL BOYCOTT

66.1 The **Contractor** agrees that neither the **Contractor** nor any substantially owned affiliated company is participating or shall participate in an international boycott in violation of the provisions ofthe Federal Export Administration Act of 1979, as amended, or the regulations of the United States Department of Commerce (Commerce Department) promulgated thereunder.

66.2 Upon the final determination by the Commerce Department or any other agency of the United States as to, or conviction of the **Contractor** or a substantially-owned affiliated company thereof for participation in an international boycott in violation of the provisions of the Export Administration Act of 1979, as amended, or the regulations promulgated thereunder, the **Comptroller** may, at his/her option, render forfeit and void this **Contract**.

66.3 The **Contractor** shall comply in all respects, with the provisions of Section 6-114 of the Administrative Code and the rules and regulations issued by the **Comptroller** thereunder.

ARTICLE 67. LOCALLY BASED ENTERPRISE PROGRAM

67.1 This **Contract** is subject to the requirements of Section 6-108.1 of the Administrative Code and regulations promulgated thereunder. No construction contract shall be awarded unless and until these requirements have been complied with in their entirety; however, compliance with this Article 67 is not required if the Agency sets Subcontractor Participation Goals for Minority- and Women-Owned Business Enterprises (M/WBEs).

67.2 Unless specifically waived by the **Commissioner** with the approval of the Division of Economic and Financial Opportunity of the **City** Department of Business Services, if any portion of the **Contract** is subcontracted, not less than ten (10%) percent of the total dollar amount of the **Contract** shall be awarded to locally based enterprises (LBEs); except that where less than ten (10%) percent of the total dollar amount of the **Contract** is subcontracted, such lesser percentage shall be so awarded.

67.3 The **Contractor** shall not require performance and payment bonds from LBE **Subcontractors**.

67.4 If the **Contractor** has indicated prior to award that no **Work** will be subcontracted, no **Work** shall be subcontracted without the prior approval of the **Commissioner**, which shall be granted only ifthe **Contractor** makes a good faith effort beginning at least six (6) weeks before the **Work** is to be performed to obtain LBE **Subcontractors** to perform the **Work**.

67.5 If the **Contractor** has not identified sufficient LBE **Subcontractors** prior to award, it shall sign a letter of compliance stating that it complies with Section 6-108.1 of the Administrative Code, recognizes that achieving the LBE requirement is a condition of its **Contract**, and shall submit documentation demonstrating its good faith efforts to obtain LBEs. After award, the **Contractor** shall begin to solicit LBE's to perform subcontracted **Work** at least six (6) weeks before the date such **Work**is to be performed and shall demonstrate that a good faith effort has been made to obtain LBEs on each subcontract until it meets the required percentage.

67.6 Failure of the **Contractor** to comply with the requirements of Section 6-108.1 of the Administrative Code and the regulations promulgated thereunder shall constitute a material breach of this **Contract**. Remedy for such breach may include the imposition of any or all of the following sanctions:

67.6.1 Reducing the **Contractor's** compensation by an amount equal to the dollar value ofthe percentage of the LBE subcontracting requirement not complied with;

67.6.2 Declaring the **Contractor** in default;

67.6.3 If the **Contractor** is an LBE, de-certifying and declaring the **Contractor** ineligibleto participate in the LBE program for a period of up to three (3) years.

ARTICLE 68. ANTITRUST

68.1 The **Contractor** hereby assigns, sells, and transfers to the **City** all right, title, and interest in and to any claims and causes of action arising under the antitrust **Laws** of New York State or of the United States relating to the particular goods or services purchased or procured by the **City** under this **Contract**.

ARTICLE 69. MacBRIDE PRINCIPLES PROVISIONS

69.1 Notice To All Prospective **Contractors**:

69.1.1 Local Law No. 34 of 1991 became effective on September 10, 1991 and added Section 6-115.1 of the Administrative Code. The local **Law** provides for certain restrictions on **City Contracts** to express the opposition of the people of the **City** to employment discrimination practices in Northern Ireland to promote freedom of work-place opportunity.

69.1.2 Pursuant to Section 6-115.1, prospective **Contractors** for **Contracts** to provide goods or services involving an expenditure of an amount greater than ten thousand ($10,000.) dollars, or for construction involving an amount greater than fifteen thousand ($15,000.) dollars, are asked to sign a rider in which they covenant and represent, as a material condition of their **Contract**, that any business operations in Northern Ireland conducted by the **Contractor** and any individual or legal entity in which the **Contractor** holds a ten (10%) percent or greater ownership interest in the **Contractor** will be conducted in accordance with the MacBride Principles of nondiscrimination in employment.

69.1.3 Prospective **Contractors** are not required to agree to these conditions. However, in the case of **Contracts** let by competitive sealed bidding, whenever the lowest responsible bidder has not agreed to stipulate to the conditions set forth in this notice and another bidder who has agreed to stipulate to such conditions has submitted a bid within five (5%) percent of the lowest responsible bid for a **Contract** to supply goods, services or contraction of comparable quality, the **Agency** shall refer such bids to the Mayor, the Speaker or other officials, as appropriate, who may determine, in accordance with applicable **Law**, that it is in the best interest of the **City** that the **Contract** be awarded to other than the lowest responsible pursuant to Section 313(b)(2) of the **City** Charter.

69.1.4 In the case of **Contracts** let by other than competitive sealed bidding, if a prospective **Contractor** does not agree to these conditions, no **Agency**, elected official or the **City** Council shall award the **Contract** to that bidder unless the **Agency** seeking to use the goods, services or construction certifies in writing that the **Contract** is necessary for the **Agency** to perform its functions and there is no other responsible **Contractor** who will supply goods, services or construction of comparable quality at a comparable price.

69.2 In accordance with Section 6-115.1 of the Administrative Code, the **Contractor** stipulates that such **Contractor** and any individual or legal entity in which the **Contractor** holds a ten (10%) percent or greater ownership interest in the **Contractor** either:

69.2.1 Have no business operations in Northern Ireland, or

69.2.2 Shall take lawful steps in good faith to conduct any business operations they have in

Northern Ireland in accordance with the MacBride Principles, and shall permit independent monitoring of their compliance with such principles.

69.3 For purposes of this Article, the following terms shall have the following meanings:

69.3.1 "MacBride Principles" shall mean those principles relating to nondiscrimination in employment and freedom of work-place opportunity which require employers doing business in Northern Ireland to:

69.3.1(a) increase the representation of individuals from under-represented religious groups in the workforce, including managerial, supervisory, administrative, clerical and technical jobs;

69.3.1(b) take steps to promote adequate security for the protection of employees from under-represented religious groups both at the work-place and while traveling toand from **Work**;

69.3.1(c) ban provocative religious or political emblems from the workplace;

69.3.1(d) publicly advertise all job openings and make special recruitment efforts to attract applicants from under-represented religious groups;

69.3.1(e) establish layoff, recall, and termination procedures which do not in practice favor a particular religious group;

69.3.1(f) abolish all job reservations, apprenticeship restrictions and different employment criteria which discriminate on the basis of religion;

69.3.1(g) develop training programs that will prepare substantial numbers of current employees from under-represented religious groups for skilled jobs, including the expansion of existing programs and the creation of new programs to train, upgrade, and improve the skills of workers from under-represented religious groups;

69.3.1(h) establish procedures to asses, identify, and actively recruit employees from under-represented religious groups with potential for further advancement; and

69.3.1(i) appoint a senior management staff member to oversee affirmative actionefforts and develop a timetable to ensure their full implementation.

69.4 The **Contractor** agrees that the covenants and representations in Article 69.2 are material conditions to this **Contract**. In the event the **Agency** receives information that the **Contractor** who made the stipulation required by this Article 69 is in violation thereof, the **Agency** shall review such information and give the **Contractor** an opportunity to respond. If the **Agency** finds that a violation has occurred, the **Agency** shall have the right to declare the **Contractor** in default in default and/or terminate this **Contract** for cause and procure supplies, services or **Work** from another source in the manner the **Agency** deems proper. In the event of such termination, the **Contractor** shall pay to the **Agency**, or the **Agency** in its sole discretion may withhold from any amounts otherwise payable to the **Contractor**, the difference between the **Contract** price for the uncompleted portion of this **Contract** and the cost to the **Agency** of completing performance of this **Contract** either itself or by engaging another **Contractor** or **Contractors**. In the case of a requirement **Contract**, the **Contractor** shall be liable for such difference in price for the entire amount of supplies required by the **Agency** for the uncompleted term of **Contractor's Contract**. In the case of a construction **Contract**, the **Agency** shall also have the right to hold the **Contractor** in partial or total default in

accordance with the default provisions of this **Contract**, and/or may seek debarment or suspension of the **Contractor**. The rights and remedies of the **Agency** hereunder shall be in addition to, and not in lieu of, any rights and remedies the **Agency** has pursuant to this **Contract** or by operation of **Law**.

ARTICLE 70. ELECTRONIC FILING/NYC DEVELOPMENT HUB

70.1 The **Contractor** shall electronically file all alteration type-2 and alteration type-3 applications via the New York City Development Hub Web site, except applications for the following types of minor alterations: enlargements, curb cuts, legalizations, fire alarms, builders pavement plans, and jobs filed on Landmark Preservation Commission calendared properties. All such filings must be professionally certified. Information about electronic filing via the New York City Development Hub is available on the **City** Department of Buildings Web site at www.nyc.gov/buildings.

ARTICLE 71. PROHIBITION OF TROPICAL HARDWOODS

71.1 Tropical hardwoods, as defined in Section 165 of the New York State Finance Law (Finance Law), shall not be utilized in the performance of this **Contract** except as expressly permitted by Section 165 of the Finance Law.

ARTICLE 72. CONFLICTS OF INTEREST

72.1 Section 2604 of the **City** Charter and other related provisions of the **City** Charter, the Administrative Code, and the Penal Law are applicable under the terms of this **Contract** in relation to conflicts of interest and shall be extended to **Subcontractors** authorized to perform **Work**, labor and services pursuant to this **Contract** and further, it shall be the duty and responsibility of the **Contractor**to so inform its respective **Subcontractors**. Notice is hereby given that, under certain circumstances, penalties may be invoked against the donor as well as the recipient of any form of valuable gift.

ARTICLE 73. MERGER CLAUSE

73.1 The written **Contract** herein, contains all the terms and conditions agreed upon by the parties hereto, and no other agreement, oral or otherwise, regarding the subject matter of this **Contract** shall be deemed to exist or to bind any of the parties hereto, or to vary any of the terms contained herein.

ARTICLE 74. STATEMENT OF WORK

74.1 The **Contractor** shall furnish all labor and materials and perform all **Work** in strictaccordance with the **Specifications** and **Addenda** thereto, numbered as shown in Schedule A.

ARTICLE 75. COMPENSATION TO BE PAID TO CONTRACTOR

75.1 The **City** will pay and the **Contractor** will accept in full consideration for the performance of the **Contract**, subject to additions and deductions as provided herein, the total sum shown in Schedule A, this said sum being the amount at which the **Contract** was awarded to the **Contractor** at a public letting thereof, based upon the **Contractor's** bid for the **Contract**.

ARTICLE 76. ELECTRONIC FUNDS TRANSFER

76.1 In accordance with Section 6-107.1 of the Administrative Code, the **Contractor** agrees to accept payments under this **Contract** from the **City** by electronic funds transfer (EFT). An EFT is any transfer of funds, other than a transaction originated by check, draft or similar paper instrument, which is initiated through an electronic terminal, telephonic instrument or computer or magnetic tape so as to order, instruct or authorize a financial institution to debit or credit an account. Prior to the first payment made under this **Contract**, the **Contractor** shall designate one financial institution or other authorized payment agent and shall complete the attached "EFT Vendor Payment Enrollment Form" in order to provide the Commissioner of the **City** Department of Finance with information necessary for the **Contractor** to receive electronic funds transfer payments through a designated financial institution or authorized payment agent. The crediting of the amount of a payment to the appropriate account on the books of a financial institution or other authorized payment agent designated by the **Contractor** shall constitute full satisfaction by the **City** for the amount of the payment under this **Contract**. The account information supplied by the **Contractor** to facilitate the electronic funds transfer shall remain confidential to the fullest extent provided by **Law**.

76.2 The **Commissioner** may waive the application of the requirements of this Article 76 to payments on contracts entered into pursuant to Section 315 of the **City** Charter. In addition, the Commissioner of the Department of Finance and the Comptroller may jointly issue standards pursuant to which the **Agency** may waive the requirements of this Article 76 for payments in the following circumstances: (i) for individuals or classes of individuals for whom compliance imposes a hardship; (ii) for classifications or types of checks; or (iii) in other circumstances as may be necessary in the interest of the **City**.

ARTICLE 77. RECORDS RETENTION

77.1 The **Contractor** agrees to retain all books, records, and other documents relevant to this **Contract** for six years after the final payment or termination of this **Contract**, whichever is later. **City**, state, and federal auditors and any other persons duly authorized by the **City** shall have full access to and the right to examine any such books, records, and other documents during the retention period.

ARTICLE 78. EXAMINATION AND VIEWING OF SITE, CONSIDERATION OF OTHER SOURCES OF INFORMATION AND CHANGED SITE CONDITIONS

78.1 Pre-Bidding (Investigation) Viewing of Site – Bidders must carefully view and examine the **Site** of the proposed **Work**, as well as its adjacent area, and seek other usual sources of information, for they will be conclusively presumed to have full knowledge of any and all conditions and hazards on, about or above the **Site** relating to or affecting in any way the performance of the **Work** to be done under the **Contract** that were or should have been known by a reasonably prudent bidder. To arrange a date for visiting the **Site**,

bidders are to contact the **Agency** contact person specified in the bid documents.

78.2 Should the **Contractor** encounter during the progress of the Work site conditions or environmental hazards at the **Site** materially differing from any shown on the **Contract Drawings** or indicated in the **Specifications** or such conditions or environmental hazards as could not reasonablyhave been anticipated by the **Contractor**, which conditions or hazards will materially affect the cost of the **Work** to be done under the **Contract**, the attention of the **Commissioner** must be called immediately to such conditions or hazards before they are disturbed. The **Commissioner** shall thereupon promptly investigate the conditions or hazards. If the **Commissioner** finds that they do so materially differ, and that they could not have been reasonably anticipated by the **Contractor**, the **Contract** may be modified with the **Commissioner**'s written approval.

ARTICLE 79. PARTICIPATION BY MINORITY-OWNED AND WOMEN-OWNED BUSINESS ENTERPRISES IN CITY PROCUREMENT

ARTICLE I. M/WBE PROGRAM

Section 6-129 of the Administrative Code of the City of New York ("Section 6-129") establishes the program for participation in City procurement ("M/WBE Program") by minority- owned business enterprises ("MBEs") and women-owned business enterprises ("WBEs"), certified in accordance with Section 1304 of the New York City Charter. As stated in Section 6- 129, the intent of the program is to address the impact of discrimination on the City's procurement process, and to promote the public interest in avoiding fraud and favoritism in the procurement process, increasing competition for City business, and lowering contract costs. The contract provisions contained herein are pursuant to Section 6-129, and the rules of the Department of Small Business Services ("DSBS") promulgated thereunder.

If this Contract is subject to the M/WBE Program established by Section 6-129, the specific requirements of MBE and/or WBE participation for this Contract are set forth in Schedule B of the Contract (entitled the "M/WBE Utilization Plan") and are detailed below.

The Contractor must comply with all applicable MBE and WBE requirements for this Contract.

All provisions of Section 6-129 are hereby incorporated in the Contract by reference and all terms used herein that are not defined herein shall have the meanings given such terms in Section 6-129.

References to MBEs or WBEs shall also include such businesses certified pursuant to the executive law where credit is required by section 311 of the New York City Charter or other provision of law.

Article I, Part A, below, sets forth provisions related to the participation goals for construction, standard and professional services contracts.

Article I, Part B, below, sets forth miscellaneous provisions related to the M/WBE Program.

PART A: PARTICIPATION GOALS FOR CONSTRUCTION, STANDARD AND PROFESSIONAL SERVICES CONTRACTS OR TASK ORDERS

1. The MBE and/or WBE Participation Goals established for this Contract or Task Orders issued pursuant to this Contract, ("Participation Goals"), as applicable, are set forth on Schedule B, Part 1 to this Contract (see Page 1, Line 1 Total Participation Goals) or will be set forth on Schedule B, Part 1 to Task Orders issued pursuant to this Contract, as applicable.

The Participation Goals represent a percentage of the total dollar value of the Contract or Task Order, as applicable, that may be achieved by awarding subcontracts to firms certified with DSBS as MBEs and/or WBEs, and/or by crediting the participation of prime contractors and/or qualified joint ventures as provided in Section 3 below, unless the goals have been waived or modified by Agency in accordance with Section 6-129 and Part A, Sections 10 and 11 below, respectively.

2. If Participation Goals have been established for this Contract or Task Orders issued pursuant to this Contract, Contractor agrees or shall agree as a material term of the Contract that Contractor shall be subject to the Participation Goals, unless the goals are waived or modified by Agency in accordance with Section 6-129 and Part A, Sections 10 and 11 below, respectively.

3. If Participation Goals have been established for this Contract or Task Order issued pursuant to this Contract, a Contractor that is an MBE and/or WBE shall be permitted to count its own participation toward fulfillment of the relevant Participation Goal, provided that in accordance with Section 6-129 the value of Contractor's participation shall be determined by subtracting from the total value of the Contract or Task Order, as applicable, any amounts that the Contractor pays to direct subcontractors (as defined in Section 6-129(c)(13)), and provided further that a Contractor that is certified as both an MBE and a WBE may count its own participation either toward the goal for MBEs or the goal for WBEs, but not both.

A Contractor that is a qualified joint venture (as defined in Section 6-129(c)(30)) shall be permitted to count a percentage of its own participation toward fulfillment of the relevant Participation Goal. In accordance with Section 6-129, the value of Contractor's participation shall be determined by subtracting from the total value of the Contract or Task Order, as applicable, any amounts that Contractor pays to direct subcontractors, and then multiplying the remainder by the percentage to be applied to total profit to determine the amount to which an MBE or WBE is entitled pursuant to the joint venture agreement, provided that where a participant in a joint venture is certified as both an MBE and a WBE, such amount shall be counted either toward the goal for MBEs or the goal for WBEs, but not both.

4. A. If Participation Goals have been established for this Contract, a prospective contractor shall be required to submit with its bid or proposal, as applicable, a completed Schedule B, M/WBE Utilization Plan, Part 2 (see Pages1-2) indicating: (a) whether the contractor is an MBE or WBE, or qualified joint venture; (b) the percentage of work it intends to award to direct subcontractors; (c) in cases where the contractor intends to award direct subcontracts, a description of the type and dollar value of work designated for participation by MBEs and/or WBEs, and the time frames in which such work is scheduled to begin and end; as well as the name, addresses, and telephone numbers of the M/WBE subcontractors if required by the solicitation; and (d) the prospective contractor's required certification and affirmations. In the event that this M/WBE Utilization Plan indicates that the bidder or proposer, as applicable, does not intend to meet the Participation Goals, the bid or proposal, as applicable, shall be deemed non-responsive, unless Agency has granted the bidder or proposer, as applicable, a pre-award waiver of the Participation Goals in accordance with Section 6-129 and Part A, Section 10 below.

B. (i) If this Contract is for a master services agreement or other requirements type contract that will result in the issuance of Task Orders that will be individually registered ("Master Services Agreement") and is subject to M/WBE Participation Goals, a prospective contractor shall be required to submit with its bid or proposal, as applicable, a completed Schedule B, M/WBE Participation Requirements for Master Services Agreements That Will Require Individually Registered Task Orders, Part 2 (page 2) indicating the prospective contractor's certification and required affirmations to make all reasonable good faith efforts to meet participation goals established on each individual Task Order issued pursuant to this Contract, or if a partial waiver is obtained or such goals are modified by the Agency, to meet the modified Participation Goals by soliciting and obtaining the participation of certified MBE and/or WBE firms. In the event that the Schedule B indicates that the bidder or proposer, as applicable, does not intend to meet the Participation Goals that may be established on Task Orders issued pursuant to this Contract, the bid or proposal, as applicable, shall be deemed non- responsive.

(ii) Participation Goals on a Master Services Agreement will be established for individual Task Orders issued after the Master Services Agreement is awarded. If Participation Goals have been established on a Task Order, a contractor shall be required to submit a Schedule B – M/WBE Utilization Plan For Independently Registered Task Orders That Are Issued Pursuant to Master Services Agreements, Part 2 (see Pages 1-2) indicating: (a) whether the contractor is an MBE or WBE, or qualified joint venture; (b) the percentage of work it intends to award to direct subcontractors; (c) in cases where the contractor intends to award direct subcontracts, a description of the type and dollar value of work designated for participation by MBEs and/or WBEs, and the time frames in which such work is scheduled to begin and end; as well as the name, addresses, and telephone numbers of the M/WBE subcontractors if required by the solicitation; and (d) the prospective contractor's required certification and affirmations. The contractor must engage in good faith efforts to meet the Participation Goals as established for the Task Order unless Agency has granted the contractor a pre-award waiver of the Participation Goals in accordance with Section 6-129 and Part A, Section 10 below.

C. THE BIDDER/PROPOSER MUST COMPLETE THE SCHEDULE B INCLUDED HEREIN (SCHEDULE B, PART 2). A SCHEDULE B SUBMITTED BY THE BIDDER/PROPOSER WHICH DOES NOT INCLUDE THE VENDOR CERTIFICATION AND REQUIRED AFFIRMATIONS WILL BE DEEMED TO BE NON-RESPONSIVE, UNLESS A FULL WAIVER OF THE PARTICIPATION GOALS IS GRANTED (SCHEDULE B, PART 3). IN THE EVENT THAT THE CITY DETERMINES THAT THE BIDDER/PROPOSER HAS SUBMITTED A SCHEDULE B WHERE THE VENDOR CERTIFICATION AND REQUIRED AFFIRMATIONS ARE COMPLETED BUT OTHER ASPECTS OF THE SCHEDULE B ARE NOT COMPLETE, OR CONTAIN A COPY OR COMPUTATION ERROR THAT IS AT ODDS WITH THE VENDOR CERTIFICATION AND AFFIRMATIONS, THE BIDDER/PROPOSER WILL BE NOTIFIED BY THE AGENCY AND WILL BE GIVEN FOUR (4) CALENDAR DAYS FROM RECEIPT OF NOTIFICATION TO CURE THE SPECIFIED DEFICIENCIES AND RETURN A COMPLETED SCHEDULE B TO THE AGENCY. FAILURE TO DO SO WILL RESULT IN A DETERMINATION THAT THE BID/PROPOSAL IS NON-RESPONSIVE. RECEIPT OF NOTIFICATION IS DEFINED AS THE DATE NOTICE IS E-MAILED OR FAXED (IF THE BIDDER/PROPOSER HAS PROVIDED AN E-MAIL ADDRESS OR FAX NUMBER), OR NO LATER THAN FIVE (5) CALENDAR DAYS FROM THE DATE OF MAILING OR UPON DELIVERY, IF DELIVERED.

5. Where an M/WBE Utilization Plan has been submitted, the Contractor shall, within 30 days of issuance by Agency of a notice to proceed, submit a list of proposed persons or entities to which it intends to award subcontracts within the subsequent 12 months. In the case of multi- year contracts, such list shall also be submitted every year thereafter. The Agency may also require the Contractor to report periodically about the contracts awarded by its direct subcontractors to indirect subcontractors (as defined in Section 6-129(c)(22)). PLEASE NOTE: If this Contract is a public works project subject to GML §101(5) (i.e., a contract valued at or below $3M for projects in New York City) or if the Contract is subject to a project labor agreement in accordance with Labor Law §222, and the bidder is required to identify at the time of bid submission its intended subcontractors for the Wicks trades (plumbing and gas fitting; steam heating, hot water heating, ventilating and air conditioning (HVAC); and electric wiring), the Contractor must identify all those to which it intends to award construction subcontracts for any portion of the Wicks trade work at the time of bid submission, regardless of what point in the life of the contract such subcontracts will occur. In identifying intended subcontractors in the bid submission, bidders may satisfy any Participation Goals established for this Contract by proposing one or more subcontractors that are MBEs and/or WBEs for any portion of the Wicks trade work. In the event that the Contractor's selection of a subcontractor is disapproved, the Contractor shall have a reasonable time to propose alternate subcontractors.

6. MBE and WBE firms must be certified by DSBS in order for the Contractor to credit such firms' participation toward the attainment of the Participation Goals. Such certification must occur prior to the firms' commencement of work. A list of city-certified MBE and WBE firms may be obtained from the DSBS website at www.nyc.gov/buycertified, by emailing DSBS at buyer@sbs.nyc.gov, by calling (212) 513-6451, or by visiting or writing DSBS at One Liberty Plaza ., New York, New York, 10006, 11th floor. Eligible firms that have not yet

been certified may contact DSBS in order to seek certification by visiting www.nyc.gov/getcertified, emailing MWBE@sbs.nyc.gov, or calling the DSBS certification helpline at (212) 513-6311. A firm that is certified as both an MBE and a WBE may be counted either toward the goal for MBEs or the goal for WBEs, but not both. No credit shall be given for participation by a graduate MBE or graduate WBE, as defined in Section 6-129(c)(20).

7. Where an M/WBE Utilization Plan has been submitted, the Contractor shall, with each voucher for payment, and/or periodically as Agency may require, submit statements, certified under penalty of perjury, which shall include, but not be limited to,: the total amount the Contractor paid to its direct subcontractors, and, where applicable pursuant to Section 6-129(j), the total amount direct subcontractors paid to indirect subcontractors; the names, addresses and contact numbers of each MBE or WBE hired as a subcontractor by the Contractor, and, where applicable, hired by any of the Contractor's direct subcontractors; and the dates and amounts paid to each MBE or WBE. The Contractor shall also submit, along with its voucher for final payment: the total amount it paid to subcontractors, and, where applicable pursuant to Section 6- 129(j), the total amount its direct subcontractors paid directly to their indirect subcontractors; and a final list, certified under penalty of perjury, which shall include the name, address and contact information of each subcontractor that is an MBE or WBE, the work performed by, and the dates and amounts paid to each.

8. If payments made to, or work performed by, MBEs or WBEs are less than the amount specified in the Contractor's M/WBE Utilization Plan, Agency shall take appropriate action, in accordance with Section 6-129 and Article II below, unless the Contractor has obtained a modification of its M/WBE Utilization Plan in accordance with Section 6-129 and Part A, Section 11 below.

9. Where an M/WBE Utilization Plan has been submitted, and the Contractor requests a change order the value of which exceeds the greater of 10 percent of the Contract or Task Order, as applicable, or $500,000, Agency shall review the scope of work for the Contract or Task Order, as applicable, and the scale and types of work involved in the change order, and determine whether the Participation Goals should be modified.

10. Pre-award waiver of the Participation Goals. (a) A bidder or proposer, or contractor with respect to a Task Order, may seek a pre-award full or partial waiver of the Participation Goals in accordance with Section 6-129, which requests that Agency change one or more Participation Goals on the grounds that the Participation Goals are unreasonable in light of the availability of certified firms to perform the services required, or by demonstrating that it has legitimate business reasons for proposing a lower level of subcontracting in its M/WBE Utilization Plan.

(b) To apply for a full or partial waiver of the Participation Goals, a bidder, proposer, or contractor, as applicable, must complete Part 3 of Schedule B **and submit such request no later than seven (7) calendar days prior to the date and time the bids, proposals, or Task Orders are due, in writing by email at MWBEModification@ddc.nyc.gov. Full or partial waiver requests that are received later than seven (7) calendar days prior to the date and time the bids, proposals, or Task Orders are due may be rejected as untimely.** Bidders, proposers, or contractors, as applicable, who have submitted timely requests will receive an Agency response by no later than two (2) calendar days prior to the due date for bids, proposals, or Task Orders; provided, however, that if that date would fall on a weekend or holiday, an Agency response will be provided by close-of-business on the business day before such weekend or holiday date.

(c) If the Agency determines that the Participation Goals are unreasonable in light of the availability of certified firms to perform the services required, it shall revise the solicitation and extend the deadline for bids and proposals, or revise the Task Order, as applicable.

(d) Agency may grant a full or partial waiver of the Participation Goals to a bidder, proposer or contractor, as applicable, who demonstrates—before submission of the bid, proposal or Task Order, as applicable—that it has legitimate business reasons for proposing the level of subcontracting in its M/WBE Utilization Plan. In making its determination, Agency shall consider factors that shall include, but not be limited

to, whether the bidder, proposer or contractor, as applicable, has the capacity and the bona fide intention to perform the Contract without any subcontracting, or to perform the Contract without awarding the amount of subcontracts represented by the Participation Goals. In making such determination, Agency may consider whether the M/WBE Utilization Plan is consistent with past subcontracting practices of the bidder, proposer or contractor, as applicable, whether the bidder, proposer or contractor, as applicable, has made efforts to form a joint venture with a certified firm, and whether the bidder, proposer, or contractor, as applicable, has made good faith efforts to identify other portions of the Contract that it intends to subcontract.

11. Modification of M/WBE Utilization Plan. (a) A Contractor may request a modification of its M/WBE Utilization Plan after award of this Contract. PLEASE NOTE: If this Contract is a public works project subject to GML §101(5) (i.e., a contract valued at or below $3M for projects in New York City) or if the Contract is subject to a project labor agreement in accordance with Labor Law §222, and the bidder is required to identify at the time of bid submission its intended subcontractors for the Wicks trades (plumbing and gas fitting; steam heating, hot water heating, ventilating and air conditioning (HVAC); and electric wiring), the Contractor may request a Modification of its M/WBE Utilization Plan as part of its bid submission. The Agency may grant a request for Modification of a Contractor's M/WBE Utilization Plan if it determines that the Contractor has established, with appropriate documentary and other evidence, that it made reasonable, good faith efforts to meet the Participation Goals. In making such determination, Agency shall consider evidence of the following efforts, as applicable, along with any other relevant factors:

(i) The Contractor advertised opportunities to participate in the Contract, where appropriate, in general circulation media, trade and professional association publications and small business media, and publications of minority and women's business organizations;
(ii) The Contractor provided notice of specific opportunities to participate in the Contract, in a timely manner, to minority and women's business organizations;
(iii) The Contractor sent written notices, by certified mail or facsimile, in a timely manner, to advise MBEs or WBEs that their interest in the Contract was solicited;
(iv) The Contractor made efforts to identify portions of the work that could be substituted for portions originally designated for participation by MBEs and/or WBEs in the M/WBE Utilization Plan, and for which the Contractor claims an inability to retain MBEs or WBEs;
(v) The Contractor held meetings with MBEs and/or WBEs prior to the date their bids or proposals were due, for the purpose of explaining in detail the scope and requirements of the work for which their bids or proposals were solicited;
(vi) The Contractor made efforts to negotiate with MBEs and/or WBEs as relevant to perform specific subcontracts, or act as suppliers or service providers;
(vii) Timely written requests for assistance made by the Contractor to Agency's M/WBE liaison officer and to DSBS;
(viii) Description of how recommendations made by DSBS and Agency were acted upon and an explanation of why action upon such recommendations did not lead to the desired level of participation of MBEs and/or WBEs.

Agency's M/WBE officer shall provide written notice to the Contractor of the determination.

(b) The Agency may modify the Participation Goals when the scope of the work has been changed by the Agency in a manner that affects the scale and types of work that the Contractor indicated in its M/WBE Utilization Plan would be awarded to subcontractors.

12. If the Contractor was required to identify in its bid or proposal the MBEs and/or WBEs they intended to use in connection with the performance of the Contract or Task Order, substitutions to the identified firms may only be made with the approval of the Agency, which shall only be given when the Contractor has proposed to use a firm that would satisfy the Participation Goals to the same extent as the firm previously identified, unless the Agency determines that the Contractor has established, with appropriate documentary and other evidence, that it made reasonable, good faith efforts. In making such determination, the Agency shall require evidence of the

efforts listed in Section 11(a) above, as applicable, along with any other relevant factors.

13. If this Contract is for an indefinite quantity of construction, standard or professional services or is a requirements type contract and the Contractor has submitted an M/WBE Utilization Plan and has committed to subcontract work to MBEs and/or WBEs in order to meet the Participation Goals, the Contractor will not be deemed in violation of the M/WBE Program requirements for this Contract with regard to any work which was intended to be subcontracted to an MBE and/or WBE to the extent that the Agency has determined that such work is not needed.

14. If Participation Goals have been established for this Contract or a Task Order issued pursuant to this Contract, at least once annually during the term of the Contract or Task Order, as applicable, Agency shall review the Contractor's progress toward attainment of its M/WBE Utilization Plan, including but not limited to, by reviewing the percentage of work the Contractor has actually awarded to MBE and/or WBE subcontractors and the payments the Contractor made to such subcontractors.

15. If Participation Goals have been established for this Contract or a Task Order issued pursuant to this Contract, Agency shall evaluate and assess the Contractor's performance in meeting those goals, and such evaluation and assessment shall become part of the Contractor's overall contract performance evaluation.

PART B: MISCELLANEOUS

The Contractor shall take notice that, if this solicitation requires the establishment of a M/WBE Utilization Plan, the resulting contract may be audited by DSBS to determine compliance with Section 6-129. See §6-129(e)(10). Furthermore, such resulting contract may also be examined by the City's Comptroller to assess compliance with the M/WBE Utilization Plan.

1. Pursuant to DSBS rules, construction contracts that include a requirement for a M/WBE Utilization Plan shall not be subject to the law governing Locally Based Enterprises set forth in Section 6-108.1 of the Administrative Code of the City of New York.

2. DSBS is available to assist contractors and potential contractors in determining the availability of MBEs and/or WBEs to participate as subcontractors, and in identifying opportunities that are appropriate for participation by MBEs and/or WBEs in contracts.

3. Prospective contractors are encouraged to enter into qualified joint venture agreements with MBEs and/or WBEs as defined by Section 6-129(c)(30).

4. By submitting a bid or proposal the Contractor hereby acknowledges its understanding of the M/WBE Program requirements set forth herein and the pertinent provisions of Section 6-129, and any rules promulgated thereunder, and if awarded this Contract, the Contractor hereby agrees to comply with the M/WBE Program requirements of this Contract and pertinent provisions of Section 6-129, and any rules promulgated thereunder, all of which shall be deemed to be material terms of this Contract. The Contractor hereby agrees to make all reasonable, good faith efforts to solicit and obtain the participation of MBEs and/or WBEs to meet the required Participation Goals.

ARTICLE II. ENFORCEMENT

1. If Agency determines that a bidder or proposer, as applicable, has, in relation to this procurement, violated Section 6-129 or the DSBS rules promulgated pursuant to Section 6-129, Agency may disqualify such bidder or proposer, as applicable, from competing for this Contract and the Agency may revoke such bidder's or proposer's prequalification status, if applicable.

2. Whenever Agency believes that the Contractor or a subcontractor is not in compliance with Section 6-129

or the DSBS rules promulgated pursuant to Section 6-129, or any provision of this Contract that implements Section 6-129, including, but not limited to any M/WBE Utilization Plan, Agency shall send a written notice to the Contractor describing the alleged noncompliance and offering the Contractor an opportunity to be heard. Agency shall then conduct an investigation to determine whether such Contractor or subcontractor is in compliance.

3. In the event that the Contractor has been found to have violated Section 6-129, the DSBS rules promulgated pursuant to Section 6-129, or any provision of this Contract that implements Section 6-129, including, but not limited to, any M/WBE Utilization Plan, Agency may determine that one of the following actions should be taken:

(a) entering into an agreement with the Contractor allowing the Contractor to cure the violation;
(b) revoking the Contractor's pre-qualification to bid or make proposals for future contracts;
(c) making a finding that the Contractor is in default of the Contract;
(d) terminating the Contract;
(e) declaring the Contractor to be in breach of Contract;
(f) withholding payment or reimbursement;
(g) determining not to renew the Contract;
(h) assessing actual and consequential damages;
(i) assessing liquidated damages or reducing fees, provided that liquidated damages may be based on amounts representing costs of delays in carrying out the purposes of the M/WBE Program, or in meeting the purposes of the Contract, the costs of meeting utilization goals through additional procurements, the administrative costs of investigation and enforcement, or other factors set forth in the Contract;
(j) exercising rights under the Contract to procure goods, services or construction from another contractor and charge the cost of such contract to the Contractor that has been found to be in noncompliance; or
(k) taking any other appropriate remedy.

4. If an M/WBE Utilization Plan has been submitted, and pursuant to this Article II, Section 3, the Contractor has been found to have failed to fulfill its Participation Goals contained in its M/WBE Utilization Plan or the Participation Goals as modified by Agency pursuant to Article I, Part A, Section 11, Agency may assess liquidated damages in the amount of ten percent (10%) of the difference between the dollar amount of work required to be awarded to MBE and/or WBE firms to meet the Participation Goals and the dollar amount the Contractor actually awarded and paid, and/or credited, to MBE and/or WBE firms. In view of the difficulty of accurately ascertaining the loss which the City will suffer by reason of Contractor’s failure to meet the Participation Goals, the foregoing amount is hereby fixed and agreed as the liquidated damages that the City will suffer by reason of such failure, and not as a penalty. Agency may deduct and retain out of any monies which may become due under this Contract the amount of any such liquidated damages; and in case the amount which may become due under this Contract shall be less than the amount of liquidated damages suffered by the City, the Contractor shall be liable to pay the difference.

5. Whenever Agency has reason to believe that an MBE and/or WBE is not qualified for certification, or is participating in a contract in a manner that does not serve a commercially useful function (as defined in Section 6-129(c)(8)), or has violated any provision of Section 6- 129, Agency shall notify the Commissioner of DSBS who shall determine whether the certification of such business enterprise should be revoked.

6. Statements made in any instrument submitted to Agency pursuant to Section 6-129 shall be submitted under penalty of perjury and any false or misleading statement or omission shall be grounds for the application of any applicable criminal and/or civil penalties for perjury. The making of a false or fraudulent statement by an MBE and/or WBE in any instrument submitted pursuant to Section 6-129 shall, in addition, be grounds for revocation of its certification.

7. The Contractor's record in implementing its M/WBE Utilization Plan shall be a factor in the evaluation of

its performance. Whenever Agency determines that a Contractor's compliance with an M/WBE Utilization Plan has been unsatisfactory, Agency shall, after consultation with the City Chief Procurement Officer, file an advice of caution form for inclusion in PASSPort as caution data.

Docusign Envelope ID: 39CF3A85-6B08-4C49-9516-28DAB96F905A

CONTRACT SIGNATURE PAGE

This Contract is entered by and between the City of New York ("City"), acting by and through the **DEPARTMENT OF DESIGN AND CONSTRUCTION**, and **DEBOE CONSTRUCTION CORP.** ("Contractor").

This Contract consists of this contract signature page as well as the following documents ("Contract Documents") which are located in the Documents tab of the PASSPort record titled **85026B0023-QED1063AC** .

1. bid bond(2) - Apr 3 2026 7:56PM
2. Broker Cert - Apr 7 2026 3:55PM
3. COI - Apr 7 2026 3:56PM
4. DeBoe Cert of Contractor Registration 24 - 26(5) - Apr 7 2026 6:08PM
5. DEBOE CONSTRUCTION CORP._ Bid_Schedule_QED1063AC - Apr 7 2026 6:23PM
6. DeBoe DDC Disability COI Exp 3-31-2027 - Apr 7 2026 3:55PM
7. performance and payout bonds - Apr 7 2026 3:54PM
8. Proposal_Bid_85026B0023001.pdf - Apr 7 2026 6:10PM
9. QED1063AC - Infra_Postponement Notice - Apr 8 2026 3:47PM
10. QED1063AC - Infra_Postponement Notice_1-5-2026 - Apr 8 2026 3:47PM
11. QED1063AC Addendum1 - Apr 7 2026 4:48PM
12. QED1063AC Addendum10 - Apr 7 2026 5:05PM
13. QED1063AC Addendum11 - Apr 7 2026 5:19PM
14. QED1063AC Addendum14 - Apr 7 2026 5:30PM
15. QED1063AC Addendum15 - Apr 7 2026 6:06PM
16. QED1063AC Addendum2 - Apr 7 2026 4:49PM
17. QED1063AC Addendum3 - Apr 7 2026 4:48PM
18. QED1063AC Addendum4 - Apr 7 2026 4:49PM
19. QED1063AC Addendum5 - Apr 7 2026 4:52PM
20. QED1063AC Addendum6 - Apr 7 2026 4:53PM
21. QED1063AC Addendum7 - Apr 7 2026 4:54PM
22. QED1063AC Addendum8 - Apr 7 2026 4:56PM
23. QED1063AC Addendum9 - Apr 7 2026 5:03PM
24. QED1063AC Final Drawing Plans 1 of 2 Addendum8 - Nov 26 2025 5:09PM
25. QED1063AC Final Drawing Plans 2 of 2 Addendum8 - Nov 26 2025 5:10PM
26. QED1063AC PLANHOLDERS LIST Addendum4 - Apr 7 2026 4:51PM

27. QED1063AC SER Requirements (Infra) 2023-09 - Apr 7 2026 4:44PM
28. QED1063AC VOL2 OF 3 Addendum11 - Apr 7 2026 5:18PM
29. QED1063AC VOL3 OF 3 Addendum11 - Apr 7 2026 5:17PM
30. Qualifications(3) - Apr 7 2026 6:07PM
31. RFx Document_85026B0023001 (1).pdf - Apr 7 2026 6:11PM
32. V1 Infra Bid Booklet PASSPort 2024-07... (9) - Apr 7 2026 6:18PM
33. Workers Comp revised - Apr 7 2026 3:57PM

The above order does not represent an order of precedence. The Contract shall be governed by the order of precedence, if any, in the Contract Documents or by ordinary contract principles if no such order of precedence exists.

Each party is signing this Contract electronically on the date stated in that party's electronic signature.

The City of New York
By: **DEPARTMENT OF DESIGN AND CONSTRUCTION**

DocuSigned by:
ERIC MACFARLANE
1A87ABA0188B41C...
(Signature)

Name: ERIC MACFARLANE

Title: First Deputy Commissioner

Date: 4/15/2026 | 13:47:13 EDT

Contractor
By: **DEBOE CONSTRUCTION CORP.**

Signed by:
Dominic Parisi
A6F0884573C8487...
(Signature)

Name: Dominic Parisi

Title: President

Date: 4/15/2026 | 13:45:46 EDT

Docusign Envelope ID: 39CF3A85-6B08-4C49-9516-28DAB96F905A

Signatures

Number of pages (including this one): 3

- ✓ Document signed electronically, the signatories agreeing that it is authentic between them.
- ✓ By signing this document, the signatories acknowledge and agree that they have carefully read this document and approve all its terms.

Nom: Parisi Dominic	Place: 12 Potter Ave New Rochelle NY 10801
Fonction: VP	Date: 4/15/2026 | 13:45:46 EDT
	Signed by: Dominic Parisi A6F0884573C8487...

Nom: Macfarlane Eric	Place: Lic NY
Fonction:	Date: 4/15/2026 | 13:47:13 EDT
	DocuSigned by: ERIC MACFARLANE 1A87ABA0188B41C...

CERTIFICATE OF LIABILITY INSURANCE

DATE (MM/DD/YYYY): 3/26/2026

THIS CERTIFICATE IS ISSUED AS A MATTER OF INFORMATION ONLY AND CONFERS NO RIGHTS UPON THE CERTIFICATE HOLDER. THIS CERTIFICATE DOES NOT AFFIRMATIVELY OR NEGATIVELY AMEND, EXTEND OR ALTER THE COVERAGE AFFORDED BY THE POLICIES BELOW. THIS CERTIFICATE OF INSURANCE DOES NOT CONSTITUTE A CONTRACT BETWEEN THE ISSUING INSURER(S), AUTHORIZED REPRESENTATIVE OR PRODUCER, AND THE CERTIFICATE HOLDER.

IMPORTANT: If the certificate holder is an ADDITIONAL INSURED, the policy(ies) must have ADDITIONAL INSURED provisions or be endorsed. If SUBROGATION IS WAIVED, subject to the terms and conditions of the policy, certain policies may require an endorsement. A statement on this certificate does not confer rights to the certificate holder in lieu of such endorsement(s).

PRODUCER
Graham Company, a Marsh & McLennan Agency, LLC company
One Penn Square West
Philadelphia, PA 19102
www.grahamco.com

CONTACT NAME: Jim Bonner/Edna Reitz
PHONE (A/C, No, Ext): 215-701-5372 **FAX (A/C, No):** 215-525-0234
E-MAIL ADDRESS: Bonner_Unit@grahamco.com

INSURER(S) AFFORDING COVERAGE	NAIC #
INSURER A : Travelers Indemnity Company	25658
INSURER B : Starr Indemnity & Liability Company	38318
INSURER C : New Jersey Manufacturers Insurance Co	12122
INSURER D :	
INSURER E :	
INSURER F :	

INSURED
DeBoe Construction Corp.
325 Westbury Ave.
Carle Place NY 11514

COVERAGES **CERTIFICATE NUMBER:** 89880913 **REVISION NUMBER:**

THIS IS TO CERTIFY THAT THE POLICIES OF INSURANCE LISTED BELOW HAVE BEEN ISSUED TO THE INSURED NAMED ABOVE FOR THE POLICY PERIOD INDICATED. NOTWITHSTANDING ANY REQUIREMENT, TERM OR CONDITION OF ANY CONTRACT OR OTHER DOCUMENT WITH RESPECT TO WHICH THIS CERTIFICATE MAY BE ISSUED OR MAY PERTAIN, THE INSURANCE AFFORDED BY THE POLICIES DESCRIBED HEREIN IS SUBJECT TO ALL THE TERMS, EXCLUSIONS AND CONDITIONS OF SUCH POLICIES. LIMITS SHOWN MAY HAVE BEEN REDUCED BY PAID CLAIMS.

INSR LTR	TYPE OF INSURANCE	ADDL INSD	SUBR WVD	POLICY NUMBER	POLICY EFF (MM/DD/YYYY)	POLICY EXP (MM/DD/YYYY)	LIMITS	
A	✓ **COMMERCIAL GENERAL LIABILITY** ☐ CLAIMS-MADE ✓ OCCUR ✓ Contractual Liability GEN'L AGGREGATE LIMIT APPLIES PER: ☐ POLICY ✓ PRO-JECT ☐ LOC ☐ OTHER:	✓		VTC2KCO5R63433AIND25	8/1/2025	8/1/2026	EACH OCCURRENCE	$ 2,000,000
							DAMAGE TO RENTED PREMISES (Ea occurrence)	$ 300,000
							MED EXP (Any one person)	$ 5,000
							PERSONAL & ADV INJURY	$ 2,000,000
							GENERAL AGGREGATE	$ 4,000,000
							PRODUCTS - COMP/OP AGG	$ 4,000,000
								$
A	**AUTOMOBILE LIABILITY** ✓ ANY AUTO ☐ OWNED AUTOS ONLY ☐ SCHEDULED AUTOS ☐ HIRED AUTOS ONLY ☐ NON-OWNED AUTOS ONLY	✓		VT2NKCAP5R634316IND25	8/1/2025	8/1/2026	COMBINED SINGLE LIMIT (Ea accident)	$ 1,000,000
							BODILY INJURY (Per person)	$
							BODILY INJURY (Per accident)	$
							PROPERTY DAMAGE (Per accident)	$
								$
B	☐ **UMBRELLA LIAB** ✓ OCCUR ✓ **EXCESS LIAB** ☐ CLAIMS-MADE ☐ DED ☐ RETENTION $			1000585129251	8/1/2025	8/1/2026	EACH OCCURRENCE	$ 2,000,000
							AGGREGATE	$ 2,000,000
								$
C	**WORKERS COMPENSATION AND EMPLOYERS' LIABILITY** ANYPROPRIETOR/PARTNER/EXECUTIVE OFFICER/MEMBER EXCLUDED? **(Mandatory in NH)** Y / N: N If yes, describe under DESCRIPTION OF OPERATIONS below	N / A		W41787325	8/1/2025	8/1/2026	✓ PER STATUTE ☐ OTH-ER	
							E.L. EACH ACCIDENT	$ 500,000
							E.L. DISEASE - EA EMPLOYEE	$ 500,000
							E.L. DISEASE - POLICY LIMIT	$ 500,000

DESCRIPTION OF OPERATIONS / LOCATIONS / VEHICLES (ACORD 101, Additional Remarks Schedule, may be attached if more space is required)

Project ID.: QED1063AC
RE: Installation of Distribution Water Mains, Queens & The Bronx

See attached addendum.

CERTIFICATE HOLDER
QED1063AC

City of New York
Department of Design and Construction
3030 Thomson Avenue
Long Island City NY 11101

CANCELLATION

SHOULD ANY OF THE ABOVE DESCRIBED POLICIES BE CANCELLED BEFORE THE EXPIRATION DATE THEREOF, NOTICE WILL BE DELIVERED IN ACCORDANCE WITH THE POLICY PROVISIONS.

AUTHORIZED REPRESENTATIVE
Carl Bloomfield

© 1988-2015 ACORD CORPORATION. All rights reserved.

AGENCY CUSTOMER ID: _____

LOC #: _____

ADDITIONAL REMARKS SCHEDULE

AGENCY		NAMED INSURED
Graham Company, a Marsh & McLennan Agency, LLC		DeBoe Construction Corp. 325 Westbury Ave. Carle Place NY 11514
POLICY NUMBER		
CARRIER	NAIC CODE	EFFECTIVE DATE:

ADDITIONAL REMARKS

THIS ADDITIONAL REMARKS FORM IS A SCHEDULE TO ACORD FORM,

FORM NUMBER: 25 **FORM TITLE:** Certificate of Liability Insurance (03/16)

HOLDER: City of New York Department of Design and Construction

ADDRESS: 3030 Thomson Avenue Long Island City NY 11101

City of New York, including its officials and employee, The Consolidated Edison Company of New York, Inc. (“Coned”), Crown Castle USA (“Crown Castle”), Charter Communications, Inc, (“Charter Spectrum”), Empire City Subway Company, LTD (“ECS”), Verizon New York Inc. (“Verizon”), National Grid USA (“National Grid”), Altice USA, Inc. (“Altice”) are Additional Insureds on a primary and non-contributory basis on the above General Liability and Auto Liability Policies if required by written contract.

Additional Insured, where required under written contract applies to both Ongoing and Completed Operations of the Insured.

Issuing Producer will endeavor to provide certificate holder with 30 days notice of cancellation.

© 2008 ACORD CORPORATION. All rights reserved.

The ACORD name and logo are registered marks of ACORD

SCHEDULE OF OTHER POLICIES

DATE ISSUED
3/26/2026

NAMED INSURED:

DeBoe Construction Corp.
325 Westbury Ave.
Carle Place NY 11514

CERTIFICATE HOLDER:

City of New York
Department of Design and Construction
3030 Thomson Avenue
Long Island City NY 11101

Coverage	Carrier	NAIC	Policy #	Eff. - Exp. Date	Limits
Pollution/Professional	St. Paul Surplus Lines Ins. Co	30481	ZCE41N9059A	8/1/2025 to 8/1/2026	$5,000,000 per occurrence/aggregate

THIS ENDORSEMENT CHANGES THE POLICY. PLEASE READ IT CAREFULLY.

XTEND ENDORSEMENT FOR CONTRACTORS

This endorsement modifies insurance provided under the following:

COMMERCIAL GENERAL LIABILITY COVERAGE PART

GENERAL DESCRIPTION OF COVERAGE – This endorsement broadens coverage. However, coverage for any injury, damage or medical expenses described in any of the provisions of this endorsement may be excluded or limited by another endorsement to this Coverage Part, and these coverage broadening provisions do not apply to the extent that coverage is excluded or limited by such an endorsement. The following listing is a general coverage description only. Read all the provisions of this endorsement and the rest of your policy carefully to determine rights, duties, and what is and is not covered.

A. Who Is An Insured – Unnamed Subsidiaries

B. Blanket Additional Insured – Governmental Entities – Permits Or Authorizations Relating To Operations

C. Incidental Medical Malpractice

D. Blanket Waiver Of Subrogation

E. Contractual Liability – Railroads

F. Damage To Premises Rented To You

PROVISIONS

A. WHO IS AN INSURED – UNNAMED SUBSIDIARIES

The following is added to **SECTION II – WHO IS AN INSURED**:

Any of your subsidiaries, other than a partnership, joint venture or limited liability company, that is not shown as a Named Insured in the Declarations is a Named Insured if:

a. You are the sole owner of, or maintain an ownership interest of more than 50% in, such subsidiary on the first day of the policy period; and

b. Such subsidiary is not an insured under similar other insurance.

No such subsidiary is an insured for "bodily injury" or "property damage" that occurred, or "personal and advertising injury" caused by an offense committed:

a. Before you maintained an ownership interest of more than 50% in such subsidiary; or

b. After the date, if any, during the policy period that you no longer maintain an ownership interest of more than 50% in such subsidiary.

For purposes of Paragraph **1.** of Section **II** – Who Is An Insured, each such subsidiary will be deemed to be designated in the Declarations as:

a. An organization other than a partnership, joint venture or limited liability company; or

b. A trust;

as indicated in its name or the documents that govern its structure.

B. BLANKET ADDITIONAL INSURED – GOVERNMENTAL ENTITIES – PERMITS OR AUTHORIZATIONS RELATING TO OPERATIONS

The following is added to **SECTION II – WHO IS AN INSURED**:

Any governmental entity that has issued a permit or authorization with respect to operations performed by you or on your behalf and that you are required by any ordinance, law, building code or written contract or agreement to include as an additional insured on this Coverage Part is an insured, but only with respect to liability for "bodily injury", "property damage" or "personal and advertising injury" arising out of such operations.

The insurance provided to such governmental entity does not apply to:

a. Any "bodily injury", "property damage" or "personal and advertising injury" arising out of operations performed for the governmental entity; or

b. Any "bodily injury" or "property damage" included in the "products-completed operations hazard".

© 2017 The Travelers Indemnity Company. All rights reserved.
Includes copyrighted material of Insurance Services Office, Inc., with its permission.

C. INCIDENTAL MEDICAL MALPRACTICE

1. The following replaces Paragraph **b.** of the definition of "occurrence" in the **DEFINITIONS** Section:

b. An act or omission committed in providing or failing to provide "incidental medical services", first aid or "Good Samaritan services" to a person, unless you are in the business or occupation of providing professional health care services.

2. The following replaces the last paragraph of Paragraph **2.a.(1)** of **SECTION II – WHO IS AN INSURED**:

Unless you are in the business or occupation of providing professional health care services, Paragraphs **(1)(a)**, **(b)**, **(c)** and **(d)** above do not apply to "bodily injury" arising out of providing or failing to provide:

(a) "Incidental medical services" by any of your "employees" who is a nurse, nurse assistant, emergency medical technician or paramedic; or

(b) First aid or "Good Samaritan services" by any of your "employees" or "volunteer workers", other than an employed or volunteer doctor. Any such "employees" or "volunteer workers" providing or failing to provide first aid or "Good Samaritan services" during their work hours for you will be deemed to be acting within the scope of their employment by you or performing duties related to the conduct of your business.

3. The following replaces the last sentence of Paragraph **5.** of **SECTION III – LIMITS OF INSURANCE**:

For the purposes of determining the applicable Each Occurrence Limit, all related acts or omissions committed in providing or failing to provide "incidental medical services", first aid or "Good Samaritan services" to any one person will be deemed to be one "occurrence".

4. The following exclusion is added to Paragraph **2.**, **Exclusions**, of **SECTION I – COVERAGES – COVERAGE A – BODILY INJURY AND PROPERTY DAMAGE LIABILITY**:

Sale Of Pharmaceuticals

"Bodily injury" or "property damage" arising out of the violation of a penal statute or ordinance relating to the sale of pharmaceuticals committed by, or with the knowledge or consent of, the insured.

5. The following is added to the **DEFINITIONS** Section:

"Incidental medical services" means:

a. Medical, surgical, dental, laboratory, x-ray or nursing service or treatment, advice or instruction, or the related furnishing of food or beverages; or

b. The furnishing or dispensing of drugs or medical, dental, or surgical supplies or appliances.

6. The following is added to Paragraph **4.b.**, **Excess Insurance**, of **SECTION IV – COMMERCIAL GENERAL LIABILITY CONDITIONS**:

This insurance is excess over any valid and collectible other insurance, whether primary, excess, contingent or on any other basis, that is available to any of your "employees" for "bodily injury" that arises out of providing or failing to provide "incidental medical services" to any person to the extent not subject to Paragraph **2.a.(1)** of Section **II** – Who Is An Insured.

D. BLANKET WAIVER OF SUBROGATION

The following is added to Paragraph **8.**, **Transfer Of Rights Of Recovery Against Others To Us**, of **SECTION IV – COMMERCIAL GENERAL LIABILITY CONDITIONS**:

If the insured has agreed in a contract or agreement to waive that insured's right of recovery against any person or organization, we waive our right of recovery against such person or organization, but only for payments we make because of:

a. "Bodily injury" or "property damage" that occurs; or

b. "Personal and advertising injury" caused by an offense that is committed;

subsequent to the execution of the contract or agreement.

E. CONTRACTUAL LIABILITY – RAILROADS

1. The following replaces Paragraph **c.** of the definition of "insured contract" in the **DEFINITIONS** Section:

c. Any easement or license agreement;

© 2017 The Travelers Indemnity Company. All rights reserved.
Includes copyrighted material of Insurance Services Office, Inc., with its permission.

2. Paragraph **f.(1)** of the definition of "insured contract" in the **DEFINITIONS** Section is deleted.

F. DAMAGE TO PREMISES RENTED TO YOU

The following replaces the definition of "premises damage" in the **DEFINITIONS** Section:

"Premises damage" means "property damage" to:

a. Any premises while rented to you or temporarily occupied by you with permission of the owner; or

b. The contents of any premises while such premises is rented to you, if you rent such premises for a period of seven or fewer consecutive days.

© 2017 The Travelers Indemnity Company. All rights reserved.
Includes copyrighted material of Insurance Services Office, Inc., with its permission.

THIS ENDORSEMENT CHANGES THE POLICY. PLEASE READ IT CAREFULLY.

BLANKET ADDITIONAL INSURED – PRIMARY AND NON-CONTRIBUTORY WITH OTHER INSURANCE – CONTRACTORS

This endorsement modifies insurance provided under the following:

BUSINESS AUTO COVERAGE FORM

PROVISIONS

1. The following is added to Paragraph **c.** in **A.1.**, **Who Is An Insured**, of **SECTION II – COVERED AUTOS LIABILITY COVERAGE**:

   This includes any person or organization who you are required under a written contract or agreement, that is signed by you before the "bodily injury" or "property damage" occurs and that is in effect during the policy period, to name as an additional insured for Covered Autos Liability Coverage, but only for damages to which this insurance applies and only to the extent of that person's or organization's liability for the conduct of another "insured".

2. The following is added to Paragraph **B.5.**, **Other Insurance** of **SECTION IV – BUSINESS AUTO CONDITIONS**:

   Regardless of the provisions of paragraph **a.** and paragraph **d.** of this part **5. Other Insurance**, this insurance is primary to and non-contributory with applicable other insurance under which an additional insured person or organization is a named insured when a written contract or agreement with you, that is signed by you before the "bodily injury" or "property damage" occurs and that is in effect during the policy period, requires this insurance to be primary and non-contributory.

© 2016 The Travelers Indemnity Company. All rights reserved.
Includes copyrighted material of Insurance Services Office, Inc. with its permission.

THIS ENDORSEMENT CHANGES THE POLICY. PLEASE READ IT CAREFULLY.

NEW YORK BUSINESS AUTO EXTENSION ENDORSEMENT

This endorsement modifies insurance provided under the following:

BUSINESS AUTO COVERAGE FORM

GENERAL DESCRIPTION OF COVERAGE – This endorsement broadens coverage. However, coverage for any injury, damage or medical expenses described in any of the provisions of this endorsement may be excluded or limited by another endorsement to the Coverage Part, and these coverage broadening provisions do not apply to the extent that coverage is excluded or limited by such an endorsement. The following listing is a general coverage description only. Limitations and exclusions may apply to these coverages. Read all the provisions of this endorsement and the rest of your policy carefully to determine rights, duties, and what is and is not covered.

A. BROAD FORM NAMED INSURED

B. BLANKET ADDITIONAL INSURED

C. EMPLOYEE HIRED AUTO

D. EMPLOYEES AS INSURED

E. SUPPLEMENTARY PAYMENTS – INCREASED LIMITS

F. WAIVER OF DEDUCTIBLE – GLASS

G. HIRED AUTO PHYSICAL DAMAGE – LOSS OF USE – INCREASED LIMIT

H. PHYSICAL DAMAGE – TRANSPORTATION EXPENSES – INCREASED LIMIT

I. PERSONAL PROPERTY

J. AIRBAGS

K. NOTICE AND KNOWLEDGE OF ACCIDENT OR LOSS

L. BLANKET WAIVER OF SUBROGATION

M. UNINTENTIONAL ERRORS OR OMISSIONS

PROVISIONS

A. BROAD FORM NAMED INSURED

The following is added to Paragraph **A.1.**, **Who Is An Insured**, of **SECTION II – COVERED AUTOS LIABILITY COVERAGE**:

Any organization you newly acquire or form during the policy period over which you maintain 50% or more ownership interest and that is not separately insured for Business Auto Coverage. Coverage under this provision is afforded only until the 180th day after you acquire or form the organization or the end of the policy period, whichever is earlier.

B. BLANKET ADDITIONAL INSURED

The following is added to Paragraph **c.** in **A.1.**, **Who Is An Insured**, of **SECTION II – COVERED AUTOS LIABILITY COVERAGE**:

Any person or organization who is required under a written contract or agreement between you and that person or organization, that is signed and executed by you before the "bodily injury" or "property damage" occurs and that is in effect during the policy period, to be named as an additional insured is an "insured" for Covered Autos Liability Coverage, but only for damages to which this insurance applies and only to the extent that person or organization qualifies as an "insured" under the Who Is An Insured provision contained in Section **II**.

C. EMPLOYEE HIRED AUTO

1. The following is added to Paragraph **A.1.**, **Who Is An Insured**, of **SECTION II – COVERED AUTOS LIABILITY COVERAGE**:

An "employee" of yours is an "insured" while operating an "auto" hired or rented under a contract or agreement in an "employee's" name, with your permission, while performing duties related to the conduct of your business.

2. The following replaces Paragraph **b.** in **B.5.**, **Other Insurance**, of **SECTION IV – BUSINESS AUTO CONDITIONS**:

b. For Hired Auto Physical Damage Coverage, the following are deemed to be covered "autos" you own:

© 2015 The Travelers Indemnity Company. All rights reserved.
Includes copyrighted material of Insurance Services Office, Inc., with its permission.

(1) Any covered "auto" you lease, hire, rent or borrow; and

(2) Any covered "auto" hired or rented by your "employee" under a contract in an "employee's" name, with your permission, while performing duties related to the conduct of your business.

However, any "auto" that is leased, hired, rented or borrowed with a driver is not a covered "auto".

D. EMPLOYEES AS INSURED

The following is added to Paragraph **A.1.**, **Who Is An Insured**, of **SECTION II – COVERED AUTOS LIABILITY COVERAGE**:

Any "employee" of yours is an "insured" while using a covered "auto" you don't own, hire or borrow in your business or your personal affairs.

E. SUPPLEMENTARY PAYMENTS – INCREASED LIMITS

1. The following replaces Paragraph **A.2.a.(2)**, of **SECTION II – COVERED AUTOS LIABILITY COVERAGE**:

(2) Up to $3,000 for cost of bail bonds (including bonds for related traffic law violations) required because of an "accident" we cover. We do not have to furnish these bonds.

2. The following replaces Paragraph **A.2.a.(4)**, of **SECTION II – COVERED AUTOS LIABILITY COVERAGE**:

(4) All reasonable expenses incurred by the "insured" at our request, including actual loss of earnings up to $500 a day because of time off from work.

F. WAIVER OF DEDUCTIBLE – GLASS

The following is added to Paragraph **D.**, **Deductible**, of **SECTION III – PHYSICAL DAMAGE COVERAGE**:

No deductible for a covered "auto" will apply to glass damage if the glass is repaired rather than replaced.

G. HIRED AUTO PHYSICAL DAMAGE – LOSS OF USE – INCREASED LIMIT

The following replaces the last sentence of Paragraph **A.4.b.**, **Loss Of Use Expenses**, of **SECTION III – PHYSICAL DAMAGE COVERAGE**:

However, the most we will pay for any expenses for loss of use is $65 per day, to a maximum of $750 for any one "accident".

H. PHYSICAL DAMAGE – TRANSPORTATION EXPENSES – INCREASED LIMIT

The following replaces the first sentence in Paragraph **A.4.a.**, **Transportation Expenses**, of **SECTION III – PHYSICAL DAMAGE COVERAGE**:

We will pay up to $50 per day to a maximum of $1,500 for temporary transportation expense incurred by you because of the total theft of a covered "auto" of the private passenger type.

I. PERSONAL PROPERTY

The following is added to Paragraph **A.4.**, **Coverage Extensions**, of **SECTION III – PHYSICAL DAMAGE COVERAGE**:

Personal Property

We will pay up to $400 for "loss" to wearing apparel and other personal property which is:

(1) Owned by an "insured"; and

(2) In or on your covered "auto".

This coverage applies only in the event of a total theft of your covered "auto".

No deductibles apply to this Personal Property coverage.

J. AIRBAGS

The following is added to Paragraph **B.3.**, **Exclusions**, of **SECTION III – PHYSICAL DAMAGE COVERAGE**:

Exclusion **3.a.** does not apply to "loss" to one or more airbags in a covered "auto" you own that inflate due to a cause other than a cause of "loss" set forth in Paragraphs **A.1.b.** and **A.1.c.**, but only:

a. If that "auto" is a covered "auto" for Comprehensive Coverage under this policy;

b. The airbags are not covered under any warranty; and

c. The airbags were not intentionally inflated.

We will pay up to a maximum of $1,000 for any one "loss".

K. NOTICE AND KNOWLEDGE OF ACCIDENT OR LOSS

The following is added to Paragraph **A.2.a.**, of **SECTION IV – BUSINESS AUTO CONDITIONS**:

Your duty to give us or our authorized representative notice as soon as reasonably

© 2015 The Travelers Indemnity Company. All rights reserved.
Includes copyrighted material of Insurance Services Office, Inc., with its permission.

possible of the "accident" or "loss" applies only when the "accident" or "loss" is known to:

(a) You (if you are an individual);

(b) A partner (if you are a partnership);

(c) A member (if you are a limited liability company);

(d) An executive officer, director or insurance manager (if you are a corporation or other organization); or

(e) Any "employee" authorized by you to give notice of the "accident" or "loss".

L. BLANKET WAIVER OF SUBROGATION

The following replaces Paragraph **A.5.**, **Transfer Of Rights Of Recovery Against Others To Us**, of **SECTION IV – BUSINESS AUTO CONDITIONS**:

5. Transfer Of Rights Of Recovery Against Others To Us

We waive any right of recovery we may have against any person or organization to the extent required of you by a written contract signed and executed prior to any "accident" or "loss", provided that the "accident" or "loss" arises out of operations contemplated by such contract. The waiver applies only to the person or organization designated in such contract.

M. UNINTENTIONAL ERRORS OR OMISSIONS

The following is added to Paragraph **B.2.**, **Concealment, Misrepresentation, Or Fraud**, of **SECTION IV – BUSINESS AUTO CONDITIONS**:

The unintentional omission of, or unintentional error in, any information given by you shall not prejudice your rights under this insurance. However this provision does not affect our right to collect additional premium or exercise our right of cancellation or non-renewal.

© 2015 The Travelers Indemnity Company. All rights reserved.
Includes copyrighted material of Insurance Services Office, Inc., with its permission.

CERTIFICATION BY INSURANCE BROKER OR AGENT

The undersigned insurance broker or agent represents to the Certificate Holder that the attached Certificate of Insurance is accurate in all material respects.

Graham Company, a Marsh & McLennan Agency, LLC company

[Name of broker or agent (typewritten)]

The Graham Building, 1 Penn Square West, Philadelphia, PA 19102

[Address of broker or agent (typewritten)]

Bonner_Unit@grahamco.com

[Email address of broker or agent (typewritten)]

215-701-5372

[Phone number/Fax number of broker or agent (typewritten)]

[Signature of authorized official, broker, or agent]

James H. Bonner, Vice President

[Name and title of authorized official, broker, or agent (typewritten)]

State of Pennsylvania .....)
) ss.:
County of Philadelphia .....)

Sworn to before me this 26th day of March 2026

Commonwealth of Pennsylvania - Notary Seal
Bridget A Magee, Notary Public
Philadelphia County
My Commission Expires February 28, 2029
Commission Number 1210060

NOTARY PUBLIC FOR THE STATE OF Pennsylvania

CERTIFICATE OF
NYS WORKERS' COMPENSATION INSURANCE COVERAGE

1a. Legal Name & Address of Insured (use street address only) DeBoe Construction Corp. 325 Westbury Ave. Carle Place NY 11514 Work Location of Insured *(Only required if coverage is specifically limited to certain locations in New York State, i.e., a Wrap-Up Policy)*	1b. Business Telephone Number of Insured (914) 623-9200 1c. NYS Unemployment Insurance Employer Registration Number of Insured 1d. Federal Employer Identification Number of Insured or Social Security Number 11-3172446
2. Name and Address of Entity Requesting Proof of Coverage (Entity Being Listed as the Certificate Holder) City of New York Department of Design and Construction 3030 Thomson Avenue Long Island City NY 11101	3a. Name of Insurance Carrier New Jersey Manufacturers Insurance Co 3b. Policy Number of Entity Listed in Box "1a" W41787325 3c. Policy effective period 08/01/2025 to 08/01/2026 3d. The Proprietor, Partners or Executive Officers are ☐ included. (Only check box if all partners/officers included) ☐ all excluded or certain partners/officers excluded.

This certifies that the insurance carrier indicated above in box “3" insures the business referenced above in box “1a” for workers' compensation under the New York State Workers' Compensation Law. **(To use this form, New York (NY) must be listed under Item 3A on the INFORMATION PAGE of the workers' compensation insurance policy).** The Insurance Carrier or its licensed agent will send this Certificate of Insurance to the entity listed above as the certificate holder in box “2".

The insurance carrier must notify the above certificate holder and the Workers' Compensation Board within 10 days IF a policy is canceled due to nonpayment of premiums or within 30 days IF there are reasons other than nonpayment of premiums that cancel the policy or eliminate the insured from the coverage indicated on this Certificate. (These notices may be sent by regular mail.) **Otherwise, this Certificate is valid for one year after this form is approved by the insurance carrier or its licensed agent, or until the policy expiration date listed in box "3c", whichever is earlier.**

This certificate is issued as a matter of information only and confers no rights upon the certificate holder. This certificate does not amend, extend or alter the coverage afforded by the policy listed, nor does it confer any rights or responsibilities beyond those contained in the referenced policy.

This certificate may be used as evidence of a Workers' Compensation contract of insurance only while the underlying policy is in effect.

Please Note: Upon cancellation of the workers' compensation policy indicated on this form, if the business continues to be named on a permit, license or contract issued by a certificate holder, the business must provide that certificate holder with a new Certificate of Workers' Compensation Coverage or other authorized proof that the business is complying with the mandatory coverage requirements of the New York State Workers' Compensation Law.

Under penalty of perjury, I certify that I am an authorized representative or licensed agent of the insurance carrier referenced above and that the named insured has the coverage as depicted on this form.

Approved by: Carl M. Bloomfield
(or licensed agent of insurance carrier)

Approved by: Carl M Bloomfield 03/26/2026
(Signature) (Date)

Title: _____

Telephone Number of authorized representative or licensed agent of insurance carrier: 215-567-6300

Please Note: Only insurance carriers and their licensed agents are authorized to issue Form C-105.2. Insurance brokers are NOT authorized to issue it.

Workers' Compensation Law

Section 57. Restriction on issue of permits and the entering into contracts unless compensation is secured.

1. The head of a state or municipal department, board, commission or office authorized or required by law to issue any permit for or in connection with any work involving the employment of employees in a hazardous employment defined by this chapter, and notwithstanding any general or special statute requiring or authorizing the issue of such permits, shall not issue such permit unless proof duly subscribed by an insurance carrier is produced in a form satisfactory to the chair, that compensation for all employees has been secured as provided by this chapter. Nothing herein, however, shall be construed as creating any liability on the part of such state or municipal department, board, commission or office to pay any compensation to any such employee if so employed.

2. The head of a state or municipal department, board, commission or office authorized or required by law to enter into any contract for or in connection with any work involving the employment of employees in a hazardous employment defined by this chapter, notwithstanding any general or special statute requiring or authorizing any such contract, shall not enter into any such contract unless proof duly subscribed by an insurance carrier is produced in a form satisfactory to the chair, that compensation for all employees has been secured as provided by this chapter.

NEW YORK STATE | Workers' Compensation Board

CERTIFICATE OF INSURANCE COVERAGE
NYS DISABILITY AND PAID FAMILY LEAVE BENEFITS LAW

PART 1. To be completed by NYS disability and Paid Family Leave benefits carrier or licensed insurance agent of that carrier

1a. Legal Name & Address of Insured (use street address only)

DEBOE CONSTRUCTION CORP.
6 Elks Court
Huntingtoon NY, 11743

Work Location of Insured *(Only required if coverage is specifically limited to certain locations in New York State, i.e., Wrap-Up Policy)*

1b. Business Telephone Number of Insured

(516) 997-9615

1c. Federal Employer Identification Number of Insured or Social Security Number

11-3172446

2. Name and Address of Entity Requesting Proof of Coverage (Entity Being Listed as the Certificate Holder)

City of New York
Department of Design and Construction
3030 Thomson Avenue
Long Island City NY 11101

3a. Name of Insurance Carrier

The Guardian Life Insurance Company of America

3b. Policy Number of Entity Listed in Box 1a

00990449-0000

3c. Policy Effective Period

04/01/2026 to 03/31/2027

4. Policy provides the following benefits:
   - [x] A. Both disability and Paid Family Leave benefits.
   - [ ] B. Disability benefits only.
   - [ ] C. Paid Family Leave benefits only.

5. Policy covers:
   - [x] A. All of the employer's employees eligible under the NYS Disability and Paid Family Leave Benefits Law.
   - [ ] B. Only the following class or classes of employer's employees:

Under penalty of perjury, I certify that I am an authorized representative or licensed agent of the insurance carrier referenced above and that the named insured has NYS disability and/or Paid Family Leave benefits insurance coverage as described above.

Date Signed 01/12/2026 By _____
(Signature of insurance carrier's authorized representative or NYS licensed insurance agent of that insurance carrier)

Telephone Number 1-888-278-4542 Name and Title Michael Prestileo, Head of Group Benefits Strategy, Product & Underwriting

IMPORTANT: If Boxes 4A and 5A are checked, and this form is signed by the insurance carrier's authorized representative or NYS Licensed Insurance Agent of that carrier, this certificate is COMPLETE. Mail it directly to the certificate holder.

If Box 4B, 4C or 5B is checked, this certificate is NOT COMPLETE for purposes of Section 220, Subd. 8 of the NYS Disability and Paid Family Leave Benefits Law. It must be emailed to PAU@wcb.ny.gov or it can be mailed for completion to the Workers' Compensation Board, Plans Acceptance Unit, PO Box 5200, Binghamton, NY 13902-5200.

PART 2. To be completed by the NYS Workers' Compensation Board (Only if Box 4B, 4C or 5B have been checked)

State of New York
Workers' Compensation Board

According to information maintained by the NYS Workers' Compensation Board, the above-named employer has complied with the NYS Disability and Paid Family Leave Benefits Law(Article 9 of the Workers' Compensation Law) with respect to all of their employees.

Date Signed _____ By _____
(Signature of Authorized NYS Workers' Compensation Board Employee)

Telephone Number _____ Name and Title _____

Please Note: *Only insurance carriers licensed to write NYS disability and Paid Family Leave benefits insurance policies and NYS licensed insurance agents of those insurance carriers are authorized to issue Form DB-120.1.* ***Insurance brokers are NOT authorized to issue this form.***

Additional Instructions for Form DB-120.1

By signing this form, the insurance carrier identified in Box 3 on this form is certifying that it is insuring the business referenced in Box 1a for disability and/or Paid Family Leave benefits under the NYS Disability and Paid Family Leave Benefits Law. The insurance carrier or its licensed agent will send this Certificate of Insurance Coverage (Certificate) to the entity listed as the certificate holder in Box 2.

The insurance carrier must notify the above certificate holder and the Workers' Compensation Board within 10 days IF a policy is cancelled due to nonpayment of premiums or within 30 days IF there are reasons other than nonpayment of premiums that cancel the policy or eliminate the insured from coverage indicated on this Certificate. (These notices may be sent by regular mail.) Otherwise, this Certificate is valid for one year after this form is approved by the insurance carrier or its licensed agent, or until the policy expiration date listed in Box 3c, whichever is earlier.

This Certificate is issued as a matter of information only and confers no rights upon the certificate holder. This Certificate does not amend, extend or alter the coverage afforded by the policy listed, nor does it confer any rights or responsibilities beyond those contained in the referenced policy.

This Certificate may be used as evidence of a NYS disability and/or Paid Family Leave benefits contract of insurance only while the underlying policy is in effect.

Please Note: Upon the cancellation of the disability and/or Paid Family Leave benefits policy indicated on this form, if the business continues to be named on a permit, license or contract issued by a certificate holder, the business must provide that certificate holder with a new Certificate of Insurance Coverage for NYS disability and/ or Paid Family Leave Benefits or other authorized proof that the business is complying with the mandatory coverage requirements of the NYS Disability and Paid Family Leave Benefits Law.

NYS DISABILITY AND PAID FAMILY LEAVE BENEFITS LAW

§220. Subd. 8

(a) The head of a state or municipal department, board, commission or office authorized or required by law to issue any permit for or in connection with any work involving the employment of employees in employment as defined in this article, and not withstanding any general or special statute requiring or authorizing the issue of such permits, shall not issue such permit unless proof duly subscribed by an insurance carrier is produced in a form satisfactory to the chair, that the payment of disability benefits and after January first, two thousand and twenty-one, the payment of family leave benefits for all employees has been secured as provided by this article. Nothing herein, however, shall be construed as creating any liability on the part of such state or municipal department, board, commission or office to pay any disability benefits to any such employee if so employed.

(b) The head of a state or municipal department, board, commission or office authorized or required by law to enter into any contract for or in connection with any work involving the employment of employees in employment as defined in this article and notwithstanding any general or special statute requiring or authorizing any such contract, shall not enter into any such contract unless proof duly subscribed by an insurance carrier is produced in a form satisfactory to the chair, that the payment of disability benefits and after January first, two thousand eighteen, the payment of family leave benefits for all employees has been secured as provided by this article.

PERFORMANCE BOND #1

Performance Bond #1 (4 Pages): Use if the total contract price is $5 Million Or Less. Performance Bond #1 has been approved by the U.S. Small Business Administration ("SBA")for participation in its Bond Guarantee Program.

PERFORMANCE BOND #1 (Page 1)

KNOW ALL PERSONS BY THESE PRESENTS:,

That we, _____

_____

_____

hereinafter referred to as the "Principal,"

and, _____

_____

_____

hereinafter referred to as the "Surety" ("Sureties") are held and firmly bound to THE CITY OF NEW YORK, hereinafter referred to as the "City" or to its successors and assigns in the penal sum of _____

_____

_____

($_____) Dollars, lawful money of the United States for the payment of whichsaid sum of money well and truly to be made, we, and each of us, bind ourselves, our heirs, executors, administrators, successors and assigns, jointly and severally, firmly by these presents.

WHEREAS, the Principal is about to enter, or has entered, into a Contract in writing with the City for

_____

_____

a copy of which Contract is annexed to and hereby made a part of this bond as though herein set forth infull;

NOW, THEREFORE, the conditions of this obligation are such that if the Principal, his or its representatives or assigns, shall well and faithfully perform the said Contract and all modifications, amendments, additions and alterations thereto that may hereafter be made, according to its terms and its true intent and meaning, including repair and or replacement of defective work and guarantees of maintenance for the periods stated in the Contract, and shall fully indemnify and save harmless the City from all cost and damage which it may suffer by reason of the Principal's default of the Contract, and shall fully reimburse and repay the City for all outlay and expense which the City may incur in making good any such default and shall protect the said City of New York against, and pay any and all amounts, damages, cost and judgments which may or shall be recovered against said City or its officers or agents or which the said City of New York may be called upon to pay any person or corporation by reason of any damages arising or growing out of the Principal's default of the Contract, then this obligation shall be nulland void, otherwise to remain in full force and effect.

The Surety (Sureties), for value received, hereby stipulates and agrees, upon written notice from the Citythat the City has determined that the Principal is in default of the Contract, to (1) pay the City the cost tocomplete the contract as determined by the City in excess of the balance of the Contract held by the City, plus any damages or costs to which the City is entitled, up to the full amount of the above penal sum, (2)fully perform and complete the Work to be performed under the Contract, pursuant to the terms, conditions, and covenants thereof, or (3) tender a completion Contractor that is acceptable to the City. The Surety (Sureties) further agrees, at its option, either to notify the City that it elects to pay the city thecost of completion plus any applicable damages and costs under option (1) above, or to commence anddiligently perform the Work specified in the Contract, including physical site work, within twenty-five
(25) business days after written notice thereof from the City and, if the Surety elects to fully perform and complete the Work, then to complete all Work within the time set forth in the Contract or such other timeas agreed to between the City and Surety in accordance with the Contract. If the Surety elects to tender payment pursuant to (1) above, then the Surety shall tender such amount within fifteen (15) business days notification from the City of the cost of completion. The Surety and the City reserve all rights and defenses each may have against the other; provided, however, that the Surety expressly agrees that its reservation of rights shall not provide a basis for non-performance of its obligation to pay the City the costof completion, to commence and complete all Work as provided herein, or to tender a completion contractor.

The Surety (Sureties), for value received, for itself and its successors and assigns, hereby stipulates and agrees that the obligation of said Surety (Sureties) and its bond shall be in no way impaired or affected byany extension of time, modification, omission, addition, or change in or to the said Contract or the Workto be performed thereunder, or by any payment thereunder before the time required therein, or by any waiver of any provisions thereof, or any moneys due or to become due thereunder; and said Surety (Sureties) does hereby waive notice of any and all of such extensions, modifications, omissions, additions,changes, payments, and waivers, and hereby expressly stipulates and agrees that any and all things doneand omitted to be done by and in relation to subcontractors shall have the same effect as to said Surety (Sureties) as though done or omitted to be done by or in relation to said Principal. Notwithstanding the above, if the City makes payments to the Principal before the time required by the contract that in the aggregate exceed $100,000 or 10% of the Contract price, whichever is less, and that have not become earned prior to the Principal being found to be in default, then all payments made to the Principal before the time required by the Contract shall be added to the remaining contract value available to be paid forthe completion of the Contract as if such sums had not been paid to the Principal, but shall not provide abasis for non-performance of its obligation to pay the City the cost of completion, to commence and to complete all Work as provided herein, or to tender a completion contractor.

IN WITNESS WHEREOF, The Principal and the Surety (Sureties) have hereunto set their hands and seals, and such of them as are corporations have caused their corporate seals to be hereunto affixed and these presents to be signed by their proper officers, this

_____ day of_____, 20_____.(Seal)

_____(L.S.)
Principal

(Seal)

By: _____.

Surety

By:_____.
_____.
(Seal) Surety

By:_____.
_____.
(Seal) Surety

By:_____.
_____.
(Seal) Surety

By:_____.
_____.
(Seal) Surety

By:_____.

Bond Premium Rate _____.

Bond Premium Cost _____.

If the Contractor (Principal) is a partnership, the bond should be signed by each of the individuals who are partners.

If the Contractor (Principal) is a corporation, the bond should be signed in its correct corporate name by aduly authorized officer, agent, or attorney-in-fact.

There should be executed an appropriate number of counterparts of the bond corresponding to the numberof counterparts of the Contract.

ACKNOWLEDGMENT OF PRINCIPAL IF A CORPORATION

State of_____County of_____ss:

On this_____day of_____, 20_____before me personally came_____,
to me known, who, being by me duly sworn did depose and say that he/she residesat _____
_____; that he/she is the _____
of the corporation described in and which executed the foregoing instrument; and that he/she signed his/her name to the foregoing instrument by order of the directors of said corporation as the duly authorized and binding act thereof.

_____
Notary Public or Commissioner of Deeds.

ACKNOWLEDGMENT OF PRINCIPAL IF A PARTNERSHIP

State of_____County of_____ss:

On this_____day of_____, 20_____before me personally came_____,
to me known, who, being by me duly sworn did dispose and say that he/she residesat _____
_____; that he/she is_____partner of
_____, a limited/general partnership existing under the laws of the State of
_____, the partnership described in and which executed the foregoing instrument; and that he/she signed his/her name to the foregoing instrument as the duly authorized and binding act ofsaid partnership.

_____
Notary Public or Commissioner of Deeds.

ACKNOWLEDGMENT OF PRINCIPAL IF AN INDIVIDUAL

State of_____County of_____ss:

On this_____day of_____, 20_____before me personally came_____,
to me known, who, being by me duly sworn did depose and say that he/she residesat _____
_____, and that he/she is the individual whose name is subscribed to the within instrument and acknowledged to me that by his/her signature on the instrument, said individual executed the instrument.

_____
Notary Public or Commissioner of Deeds

Each executed bond should be accompanied by: (a) appropriate acknowledgments of the respective parties; (b) appropriate duly certified copy of Power of Attorney or other certificate of authority where bond is executed by agent, officer or other representative of Principal or Surety; (c) a duly certified extract from By-Laws or resolutions of Surety under which Power of Attorney or other certificate of authority of its agent, officer or representative was issued, and (d) certified copy of latest published financial statement of assets and liabilities of Surety.

* * * * * * * *

Affix Acknowledgments and Justification of Sureties.

Bond No. PRF9368141

Performance Bond #2 (Pages 104 to 107): Use if the total contract price is more than $5 Million.

PERFORMANCE BOND #2

KNOW ALL PERSONS BY THESE PRESENTS:,
That we, DeBoe Construction Corp.

325 Westbury Avenue, Carle Place, NY 11514

hereinafter referred to as the "Principal,"
and, Fidelity and Deposit Company of Maryland and Zurich American Insurance Company

1299 Zurich Way , Schaumburg, IL 60196-1056

hereinafter referred to as the "Surety" ("Sureties") are held and firmly bound to THE CITY OF NEW YORK, hereinafter referred to as the "City" or to its successors and assigns in the penal sum of Nineteen Million One Hundred Twelve Thousand Eight Hundred Nineteen Dollars and 19/100

($ 19,112,819.19) Dollars, lawful money of the United States for the payment of which said sum of money well and truly to be made, we, and each of us, bind ourselves, our heirs, executors, administrators, successors and assigns, jointly and severally, firmly by these presents.

WHEREAS, the Principal is about to enter, or has entered, into a Contract in writing with the City for

QED1063AC - Installation of Distribution Water Mains, Queens & The Bronx

a copy of which Contract is annexed to and hereby made a part of this bond as though herein set forth in full;

NOW, THEREFORE, the conditions of this obligation are such that if the Principal, his or its representatives or assigns, shall well and faithfully perform the said Contract and all modifications, amendments, additions and alterations thereto that may hereafter be made, according to its terms and its true intent and meaning, including repair and or replacement of defective work and guarantees of maintenance for the periods stated in the Contract, and shall fully indemnify and save harmless the City from all cost and damage which it may suffer by reason of the Principal's default of the Contract, and shall fully reimburse and repay the City for all outlay and expense which the City may incur in making

<u>Performance Bond #2 (Pages 104 to 107)</u>: Use if the total contract price is more than $5 Million.

good any such default and shall protect the said City of New York against, and pay any and all amounts, damages, cost and judgments which may or shall be recovered against said City or its officers or agents or which the said City of New York may be called upon to pay any person or corporation by reason of any damages arising or growing out of the Principal's default of the Contract, then this obligation shall be null and void, otherwise to remain in full force and effect.

The Surety (Sureties), for value received, hereby stipulates and agrees, upon written notice from the City that the City has determined that the Principal is in default of the Contract, to either (1) pay the full amount of the above penal sum in complete discharge and exoneration of this bond and of all the liabilities of the Surety relating to this bond, or (2) fully perform and complete the Work to be performed under the Contract, pursuant to the terms, conditions, and covenants thereof. The Surety (Sureties) further agrees, at its option, either to tender the penal sum or to commence and diligently perform the Work specified in the Contract, including physical site work, within twenty-five (25) business days after written notice thereof from the City and to complete all Work within the time set forth in the Contract or such other time as agreed to between the City and Surety in accordance with the Contract. The Surety and the City reserve all rights and defenses each may have against the other; provided, however, that the Surety expressly agrees that its reservation of rights shall not provide a basis for non-performance of its obligation to commence and to complete all Work as provided herein.

The Surety (Sureties), for value received, for itself and its successors and assigns, hereby stipulates and agrees that the obligation of said Surety (Sureties) and its bond shall be in no way impaired or affected by any extension of time, modification, omission, addition, or change in or to the said Contract or the Work to be performed thereunder, or by any payment thereunder before the time required therein, or by any waiver of any provisions thereof, or by any assignment, subletting or other transfer thereof or of any Work to be performed or any moneys due or to become due thereunder; and said Surety (Sureties) does hereby waive notice of any and all of such extensions, modifications, omissions, additions, changes, payments, waivers, assignments, subcontracts and transfers, and hereby expressly stipulates and agrees that any and all things done and omitted to be done by and in relation to assignees, subcontractors, and other transferees shall have the same effect as to said Surety (Sureties) as though done or omitted to be done by or in relation to said Principal.

Performance Bond #2 (Pages 104 to 107): Use if the total contract price is more than $5 Million.

IN WITNESS WHEREOF, The Principal and the Surety (Sureties) have hereunto set their hands and seals, and such of them as are corporations have caused their corporate seals to be hereunto affixed and these presents to be signed by their proper officers, this 26th day of March, 2026.

(Seal)

DeBoe Construction Corp. (L.S.)
Principal

By: _____

Fidelity and Deposit Company of Maryland
and Zurich American Insurance Company
Surety

By: Mary L. Padilla
Mary L. Padilla, Attorney-in-Fact

(Seal)

_____
Surety

By: _____

(Seal)

_____
Surety

By: _____

(Seal)

_____
Surety

By: _____

(Seal)

_____
Surety

By: _____

Bond Premium Rate Scale.
Bond Premium Cost 144,397.00.

If the Contractor (Principal) is a partnership, the bond should be signed by each of the individuals who are partners.

If the Contractor (Principal) is a corporation, the bond should be signed in its correct corporate name by a duly authorized officer, agent, or attorney-in-fact.

There should be executed an appropriate number of counterparts of the bond corresponding to the number of counterparts of the Contract.

Performance Bond #2 (Pages 104 to 107): Use if the total contract price is more than $5 Million.

ACKNOWLEDGMENT OF PRINCIPAL IF A CORPORATION

State of New York County of Westchester ss:

On this 30 day of March, 2026 before me personally came Dominic Panisi,
to me known, who,.being by me duly sworn did depose and say that he/she resides
at Tarrytown, NY; that he/she is the President
of the corporation described in and which executed the foregoing instrument; and that he/she signed his/her name to the foregoing instrument by order of the directors of said corporation as the duly authorized and binding act thereof.

MARIA T. TIRONE
Notary Public, State of New York
No. 01TI5049851
Qualified in Westchester County
Commission Expires September 25, 2029

Notary Public or Commissioner of Deeds

ACKNOWLEDGMENT OF PRINCIPAL IF A PARTNERSHIP

State of _____ County of _____ ss:

On this _____ day of _____, _____ before me personally came _____,
to me known, who,.being by me duly sworn did depose and say that he/she resides
at _____
_____; that he/she is _____ partner of
_____, a limited/general partnership existing under the laws of the State of
_____, the partnership described in and which executed the foregoing instrument;
and that he/she signed his/her name to the foregoing instrument as the duly authorized and binding act of said partnership.

_____
Notary Public or Commissioner of Deeds

ACKNOWLEDGMENT OF PRINCIPAL IF AN INDIVIDUAL

State of _____ County of _____ ss:

On this _____ day of _____, _____ before me personally came _____,
to me known, who,.being by me duly sworn did depose and say that he/she resides
at _____
_____, and that he/she is the individual whose name is subscribed to the within instrument and acknowledged to me that by his/her signature on the instrument, said individual executed the instrument.

_____
Notary Public or Commissioner of Deeds

Each executed bond should be accompanied by: (a) appropriate acknowledgments of the respective parties; (b) appropriate duly certified copy of Power of Attorney or other certificate of authority where bond is executed by agent, officer or other representative of Principal or Surety; (c) a duly certified extract from By-Laws or resolutions of Surety under which Power of Attorney or other certificate of authority of its agent, officer or representative was issued, and (d) certified copy of latest published financial statement of assets and liabilities of Surety.

* * * * * * * *

Affix Acknowledgments and Justification of Sureties.

Surety Acknowledgment

State of **New York**

County of **Westchester**

On the **26th** day of **March, 2026** personally came **Mary L. Padilla** to me known, who being by me duly sworn did depose and say that he/she/they is an Attorney-in-Fact of **Fidelity and Deposit Company of Maryland** and **Zurich American Insurance Company** in and which executed the above Instrument know(s) the corporate seal of said corporation; that the seal affixed to the within instrument is such corporate seal, and that he/she/they signed the said instrument and affixed the said seal as Attorney-in-Fact by authority of the Board of Directors of said corporation and by authority of this office under the standing resolution thereof.

My commission expires 4-7-2027

Jesse Engel
Notary Public

JESSE ENGEL
Notary Public, State of New York
No. 01EN0005306
Qualified in Westchester County
Commission Expires 4/07/2027

ZURICH AMERICAN INSURANCE COMPANY
COLONIAL AMERICAN CASUALTY AND SURETY COMPANY
FIDELITY AND DEPOSIT COMPANY OF MARYLAND
POWER OF ATTORNEY

KNOW ALL MEN BY THESE PRESENTS: That the ZURICH AMERICAN INSURANCE COMPANY, a corporation of the State of New York, the COLONIAL AMERICAN CASUALTY AND SURETY COMPANY, a corporation of the State of Illinois, and the FIDELITY AND DEPOSIT COMPANY OF MARYLAND a corporation of the State of Illinois (herein collectively called the "Companies"), by Robert D. Murray, Vice President, in pursuance of authority granted by Article V, Section 8, of the By-Laws of said Companies, which are set forth on the reverse side hereof and are hereby certified to be in full force and effect on the date hereof, do hereby nominate, constitute, and appoint Raymond C. CARMAN, Cornelia M. DESOUZA, Theresa A. LANFRANCO, Mary L. PADILLA, of Uniondale, New York, its true and lawful agent and Attorney-in-Fact, to make, execute, seal and deliver, for, and on its behalf as surety, and as its act and deed: **any and all bonds and undertakings,** and the execution of such bonds or undertakings in pursuance of these presents, shall be as binding upon said Companies, as fully and amply, to all intents and purposes, as if they had been duly executed and acknowledged by the regularly elected officers of the ZURICH AMERICAN INSURANCE COMPANY at its office in New York, New York., the regularly elected officers of the COLONIAL AMERICAN CASUALTY AND SURETY COMPANY at its office in Owings Mills, Maryland., and the regularly elected officers of the FIDELITY AND DEPOSIT COMPANY OF MARYLAND at its office in Owings Mills, Maryland., in their own proper persons.

The said Vice President does hereby certify that the extract set forth on the reverse side hereof is a true copy of Article V, Section 8, of the By-Laws of said Companies, and is now in force.

IN WITNESS WHEREOF, the said Vice-President has hereunto subscribed his/her names and affixed the Corporate Seals of the said **ZURICH AMERICAN INSURANCE COMPANY, COLONIAL AMERICAN CASUALTY AND SURETY COMPANY, and FIDELITY AND DEPOSIT COMPANY OF MARYLAND**, this 8th day of May, A.D. 2024.

Colonial American Casualty and Surety Company CORPORATE SEAL
ZURICH AMERICAN INSURANCE COMPANY CORPORATE SEAL 1927 NEW YORK
Fidelity and Deposit Company of Maryland CORPORATE SEAL 1890

ATTEST:
ZURICH AMERICAN INSURANCE COMPANY
COLONIAL AMERICAN CASUALTY AND SURETY COMPANY
FIDELITY AND DEPOSIT COMPANY OF MARYLAND

By: Robert D. Murray
Vice President

By: Dawn E. Brown
Secretary

State of Maryland
County of Baltimore

On this 8th day of May, A.D. 2024, before the subscriber, a Notary Public of the State of Maryland, duly commissioned and qualified, **Robert D. Murray, Vice President and Dawn E. Brown, Secretary** of the Companies, to me personally known to be the individuals and officers described in and who executed the preceding instrument, and acknowledged the execution of same, and being by me duly sworn, deposeth and saith, that he/she is the said officer of the Company aforesaid, and that the seals affixed to the preceding instrument are the Corporate Seals of said Companies, and that the said Corporate Seals and the signature as such officer were duly affixed and subscribed to the said instrument by the authority and direction of the said Corporations.

IN TESTIMONY WHEREOF, I have hereunto set my hand and affixed my Official Seal the day and year first above written.

Genevieve M. Maison

GENEVIEVE M. MAISON
NOTARY PUBLIC
BALTIMORE COUNTY, MD
My Commission Expires JANUARY 27, 2025

GENEVIEVE M. MAISON NOTARY PUBLIC EXP. 01/27/2025 BALTIMORE COUNTY, MD

Authenticity of this bond can be confirmed at bondvalidator.zurichna.com or 410-559-8790

EXTRACT FROM BY-LAWS OF THE COMPANIES

"Article V, Section 8, Attorneys-in-Fact. The Chief Executive Officer, the President, or any Executive Vice President or Vice President may, by written instrument under the attested corporate seal, appoint attorneys-in-fact with authority to execute bonds, policies, recognizances, stipulations, undertakings, or other like instruments on behalf of the Company, and may authorize any officer or any such attorney-in-fact to affix the corporate seal thereto; and may with or without cause modify of revoke any such appointment or authority at any time."

CERTIFICATE

I, the undersigned, Vice President of the ZURICH AMERICAN INSURANCE COMPANY, the COLONIAL AMERICAN CASUALTY AND SURETY COMPANY, and the FIDELITY AND DEPOSIT COMPANY OF MARYLAND, do hereby certify that the foregoing Power of Attorney is still in full force and effect on the date of this certificate; and I do further certify that Article V, Section 8, of the By-Laws of the Companies is still in force.

This Power of Attorney and Certificate may be signed by facsimile under and by authority of the following resolution of the Board of Directors of the ZURICH AMERICAN INSURANCE COMPANY at a meeting duly called and held on the 15th day of December 1998.

RESOLVED: "That the signature of the President or a Vice President and the attesting signature of a Secretary or an Assistant Secretary and the Seal of the Company may be affixed by facsimile on any Power of Attorney...Any such Power or any certificate thereof bearing such facsimile signature and seal shall be valid and binding on the Company."

This Power of Attorney and Certificate may be signed by facsimile under and by authority of the following resolution of the Board of Directors of the COLONIAL AMERICAN CASUALTY AND SURETY COMPANY at a meeting duly called and held on the 5th day of May, 1994, and the following resolution of the Board of Directors of the FIDELITY AND DEPOSIT COMPANY OF MARYLAND at a meeting duly called and held on the 10th day of May, 1990.

RESOLVED: "That the facsimile or mechanically reproduced seal of the company and facsimile or mechanically reproduced signature of any Vice-President, Secretary, or Assistant Secretary of the Company, whether made heretofore or hereafter, wherever appearing upon a certified copy of any power of attorney issued by the Company, shall be valid and binding upon the Company with the same force and effect as though manually affixed.

IN TESTIMONY WHEREOF, I have hereunto subscribed my name and affixed the corporate seals of the said Companies, this 26th day of March, 2026.

Thomas O. McClellan
Vice President

TO REPORT A CLAIM WITH REGARD TO A SURETY BOND, PLEASE SUBMIT A COMPLETE DESCRIPTION OF THE CLAIM INCLUDING THE PRINCIPAL ON THE BOND, THE BOND NUMBER, AND YOUR CONTACT INFORMATION TO:

Zurich Surety Claims
1299 Zurich Way
Schaumburg, IL 60196-1056
reportsfclaims@zurichna.com
800-626-4577

Authenticity of this bond can be confirmed at bondvalidator.zurichna.com or 410-559-8790

THE FIDELITY AND DEPOSIT COMPANY

OF MARYLAND
1299 Zurich Way Schaumburg, IL 60196

Statement of Financial Condition
As Of December 31, 2025

ASSETS

Bonds	$ 163,187,715
Stocks	18,642,935
Cash and Short-Term Investments	4,039,704
Reinsurance Recoverable	58,043,167
Federal Income Tax Recoverable	0
Other Accounts Receivable	3,360,596
TOTAL ADMITTED ASSETS	$ 247,274,117

LIABILITIES, SURPLUS AND OTHER FUNDS

Reserve for Taxes and Expenses		$ 312,062
Ceded Reinsurance Premiums Payable		47,234,348
Remittances and Items Unallocated		3
Payable to parents, subs and affiliates		12,441,616
Other Liabilities		16,700
Securities Lending Collateral Liability		0
TOTAL LIABILITIES		$ 60,004,729
Capital Stock, Paid Up	$ 5,000,000	
Surplus	182,269,388	
Surplus as regards Policyholders		187,269,388
TOTAL		$ 247,274,117

Securities carried at $78,444,411 in the above statement are deposited with various states as required by law.

Securities carried on the basis prescribed by the National Association of Insurance Commissioners. On the basis of market quotations for all bonds and stocks owned, the Company's total admitted assets on December 31, 2025, would be $241,749,332 and surplus as regards policyholders $181,744,603.

I, LAURA J. LAZARCZYK, Corporate Secretary of the FIDELITY AND DEPOSIT COMPANY OF MARYLAND, do hereby certify that the foregoing statement is a correct exhibit of the assets and liabilities of the said Company on the 31st day of December 2025.

Signed by:
Laura J. Lazarczyk

Corporate Secretary

State of Illinois
City of Schaumburg } SS:

Subscribed and sworn to, before me, a Notary Public of the State of Illinois, in the City of Schaumburg, this 11th day of March 2026.

Grace Ibeth Herrera

Notary Public

OFFICIAL SEAL
GRACE IBETH HERRERA
Notary Public, State of Illinois
Commission No. 1018292
My Commission Expires
October 01, 2029

ZURICH AMERICAN INSURANCE COMPANY
COMPARATIVE BALANCE SHEET
4 WORLD TRADE CENTER, 150 GREENWICH STREET, NEW YORK, NY 10007
As of December 31, 2025 and December 31, 2024

	12/31/2025	12/31/2024
Assets		
Bonds	$ 14,986,706,885	$ 14,585,320,733
Preferred Stock	8,649,220	-
Common Stock	2,445,688,980	2,318,962,357
Real Estate	1,168,052,895	1,203,299,515
Other Invested Assets	1,661,661,653	1,557,095,337
Derivatives	4,612,289	9,084,392
Short-term Investments	9,454,286	538,419
Receivable for securities	17,002,072	76,176,280
Cash and cash equivalents	159,190,433	442,486,445
Securities lending reinvested collateral assets	-	-
Employee Trust for Deferred Compensation Plan	205,678,117	172,754,053
Total Cash and Invested Assets	$ 20,666,696,830	$ 20,365,717,530
Premiums Receivable	$ 5,286,640,545	$ 6,819,954,449
Funds Held with Reinsurers	1,990,265	2,283,644
Reinsurance Recoverable	1,528,748,870	1,502,965,418
Accrued Investment Income	140,489,639	129,291,204
Federal Income Tax Recoverable	691,280,386	714,744,916
Due from Affiliates	143,622,939	132,941,409
Other Assets	1,838,325,885	707,816,920
Total Assets	$ 30,297,795,359	$ 30,375,715,489
Liabilities and Policyholders' Surplus		
Liabilities:		
Loss and LAE Reserves	$ 12,563,528,099	$ 12,234,708,389
Unearned Premium Reserve	5,112,734,102	4,915,163,970
Funds Held with Reinsurers	904,983,002	773,420,047
Loss In Course of Payment	807,368,672	1,483,026,238
Commission Reserve	214,473,503	213,774,361
Federal Income Tax Payable	-	-
Remittances and Items Unallocated	207,095,477	243,519,684
Payable to parent, subs and affiliates	446,424,027	388,489,825
Provision for Reinsurance	15,307,495	64,258,573
Ceded Reinsurance Premiums Payable	2,104,794,885	2,159,392,851
Securities Lending Collateral Liability	-	-
Other Liabilities	1,884,772,781	2,065,429,910
Total Liabilities	$ 24,261,482,043	$ 24,541,183,850
Policyholders' Surplus:		
Common Capital Stock	$ 5,000,000	$ 5,000,000
Paid-In and Contributed Surplus	4,393,616,489	4,393,615,052
Surplus Notes	-	-
Special Surplus Funds	3,316,518	3,993,000
Cumulative Unrealized Gain	34,754,104	38,342,087
Unassigned Surplus	1,599,626,205	1,393,581,502
Total Policyholders' Surplus	$ 6,036,313,316	$ 5,834,531,641
Total Liabilities and Policyholders' Surplus	$ 30,297,795,359	$ 30,375,715,490

I, LAURA J. LAZARCZYK, Corporate Secretary of ZURICH AMERICAN INSURANCE COMPANY do hereby certify that the foregoing statement is a correct exhibit of the assets and liabilities of the said Company, on the 31st day of December, 2025, according to the best of my information, knowledge and belief.

Signed by: Laura J. Lazarczyk

Corporate Secretary

State of Illinois
County of Cook } SS:

Subscribed and sworn to, before me, a Notary Public of the State of Illinois, in the City of Schaumburg, this 11th day of March, 2026.

Notary public

OFFICIAL SEAL
GRACE IBETH HERRERA
Notary Public, State of Illinois
Commission No. 1018292
My Commission Expires
October 01, 2029

INTERNAL USE ONLY

Bond No. PRF9368141

Payment Bond (Pages 108 to 111): Use for any contract for which a Payment Bond is required.

PAYMENT BOND

KNOW ALL PERSONS BY THESE PRESENTS, That we,

DeBoe Construction Corp.

325 Westbury Avenue, Carle Place, NY 11514

hereinafter referred to as the "Principal", and Fidelity and Deposit Company of Maryland

and Zurich American Insurance Company

1299 Zurich Way , Schaumburg, IL 60196-1056

hereinafter referred to as the "Surety" ("Sureties") are held and firmly bound to THE CITY OF NEW YORK, hereinafter referred to as the "City" or to its successors and assigns, in the penal sum of

Nineteen Million One Hundred Twelve Thousand Eight Hundred Nineteen Dollars and 19/100

($ 19,112,819.19) Dollars, lawful money of the United States, for the payment of which said sum of money well and truly to be made, we, and each of us, bind ourselves, our heirs, executors, administrators, successors and assigns, jointly and severally, firmly by these presents.

WHEREAS, the Principal is about to enter, or has entered, into a Contract in writing with the City for

QED1063AC - Installation of Distribution Water Mains, Queens & The Bronx

a copy of which Contract is annexed to and hereby made a part of this bond as though herein set forth in full;

NOW, THEREFORE, the conditions of this obligation are such that if the Principal, his or its representatives or assigns and other Subcontractors to whom Work under this Contract is sublet and his or their successors and assigns shall promptly pay or cause to be paid all lawful claims for

(a) Wages and compensation for labor performed and services rendered by all persons engaged in the prosecution of the Work under said Contract, and any amendment or extension thereof or addition thereto, whether such persons be agents servants or employees of the Principal or any such Subcontractor, including all persons so engaged who perform the work of laborers or mechanics at or in the vicinity of the site

<u>Payment Bond (Pages 108 to 111)</u>: Use for any contract for which a Payment Bond is required.

of the Project regardless of any contractual relationship between the Principal or such Subcontractors, or his or their successors or assigns, on the one hand and such laborers or mechanics on the other, but not including office employees not regularly stationed at the site of the project; and

(b) Materials and supplies (whether incorporated in the permanent structure or not), as well as teams, fuels, oils, implements or machinery furnished, used or consumed by said Principal or any subcontractor at or in the vicinity of the site of the Project in the prosecution of the Work under said Contract and any amendment or extension thereof or addition thereto; then this obligation shall be void, otherwise to remain in full force and effect.

This bond is subject to the following additional conditions, limitations and agreements:

(a) The Principal and Surety (Sureties) agree that this bond shall be for the benefit of any materialmen or laborer having a just claim, as well as the City itself.

(b) All persons who have performed labor, rendered services or furnished materials and supplies, as aforesaid, shall have a direct right of action against the Principal and his, its or their successors and assigns, and the Surety (Sureties) herein, or against either or both or any of them and their successors and assigns. Such persons may sue in their own name, and may prosecute the suit to judgment and execution without the necessity of joining with any other persons as party plaintiff.

(c) The Principal and Surety (Sureties) agree that neither of them will hold the City liable for any judgment for costs of otherwise, obtained by either or both of them against a laborer or materialman in a suit brought by either a laborer or materialman under this bond for moneys allegedly due for performing work or furnishing material.

(d) The Surety (Sureties) or its successors and assigns shall not be liable for any compensation recoverable by an employee or laborer under the Workmen's Compensation Law.

(e) In no event shall the Surety (Sureties), or its successors or assigns, be liable for a greater sum than the penalty of this bond or be subject to any suit, action or proceeding hereon that is instituted by any person, firm, or corporation hereunder later than two years after the complete performance of said Contract and final settlement thereof.

The Principal, for himself and his successors and assigns, and the Surety (Sureties), for itself and its successors and assigns, do hereby expressly waive any objection that might be interposed as to the right of the City to require a bond containing the foregoing provisions, and they do hereby further expressly waive any defense which they or either of them might interpose to an action brought hereon by any person, firm or corporation, including subcontractors, materialmen and third persons, for work, labor, services, supplies or material performed rendered, or furnished as aforesaid upon the ground that there is no law authorizing the City to require the foregoing provisions to be place in this bond.

And the Surety (Sureties), for value received, for itself and its successors and assigns, hereby stipulates and agrees that the obligation of said Surety (Sureties), and its bonds shall be in no way impaired or affected by any extension of time, modification, omission, addition, or change in or of the said Contract or the work to be performed thereunder, or by any payment thereunder before the time required therein, or by any waiver of any provisions thereof, or by any assignment, subletting or other transfer thereof or of any part thereof, or of any Work to be performed, or any moneys due to become due thereunder and said Surety (Sureties) does hereby waive notice of any and all of such extensions, modifications, omissions, additions, changes, payments, waivers, assignments, subcontracts and transfers, and hereby expressly stipulates and agrees that any and all things done and omitted to be done by and in relation to assignees, Subcontractors, and other transferees shall have the same effect as to said Surety (Sureties) as though done or omitted to be done or in relation to said Principal.

Payment Bond (Pages 108 to 111): Use for any contract for which a Payment Bond is required.

IN WITNESS WHEREOF, the Principal and the Surety (Sureties) have hereunto set their hands and seals, and such of them as are corporations have caused their corporate seals to be hereunto affixed and these presents to be signed by their proper officers, this 26th day of March, 2026.

(Seal)

DeBoe Construction Corp. (L.S.)
Principal

By:

Fidelity and Deposit Company of Maryland
and Zurich American Insurance Company
Surety

By: Mary L. Padilla
Mary L. Padilla, Attorney-in-Fact

(Seal)

Surety

By:

(Seal)

Surety

By:

(Seal)

Surety

By:

If the Contractor (Principal) is a partnership, the bond should be signed by each of the individuals who are partners.

If the Contractor (Principal) is a corporation, the bond should be signed in its correct corporate name by a duly authorized officer, agent, or attorney-in-fact.

There should be executed an appropriate number of counterparts of the bond corresponding to the number of counterparts of the Contract.

Payment Bond (Pages 108 to 111): Use for any contract for which a Payment Bond is required.

ACKNOWLEDGMENT OF PRINCIPAL, IF A CORPORATION

State of New York County of Westchester ss:

On this 30 day of March, 2026, before me personally came Dominic Pricci to me known, who, being by me duly sworn did depose and say that he resides at 2006 Watch Hill Dr Tarrytown, NY that he is the President of the corporation described in and which executed the foregoing instrument; that he knows the seal of said corporation; that one of the seals affixed to said instrument is such seal; that it was so affixed by order of the directors of said corporation, and that he signed his name thereto by like order.

MARIA T. TIRONE
Notary Public, State of New York
No. 01TI5049851
Qualified in Westchester County
Commission Expires September 25, 2029

Notary Public or Commissioner of Deeds

ACKNOWLEDGMENT OF PRINCIPAL, IF A PARTNERSHIP

State of _____ County of _____ ss:

On this _____ day of _____, _____, before me personally appeared _____ to me known, and known to me to be one of the members of the firm of _____ _____ described in and who executed the foregoing instrument; and he acknowledged to me that he executed the same as and for the act and deed of said firm.

Notary Public or Commissioner of Deeds

ACKNOWLEDGMENT OF PRINCIPAL, IF AN INDIVIDUAL

State of _____ County of _____ ss:

On this _____ day of _____, _____, before me personally appeared _____ to me known, and known to me to be the person described in and who executed the foregoing instrument; and acknowledged that he executed the same.

Notary Public or Commissioner of Deeds

Each executed bond should be accompanied by: (a) appropriate acknowledgments of the respective parties; (b) appropriate duly certified copy of Power of Attorney or other certificate of authority where bond is executed by agent, officer or other representative of Principal or Surety; (c) a duly certified extract from By-Laws or resolutions of Surety under which Power of Attorney or other certificate of authority of its agent, officer or representative was issued, and (d) certified copy of latest published financial statement of assets and liabilities of Surety.

* * * * * * * *

Affix Acknowledgments and Justification of Sureties.

Surety Acknowledgment

State of **New York**

County of **Westchester**

On the **26th** day of **March, 2026** personally came **Mary L. Padilla** to me known, who being by me duly sworn did depose and say that he/she/they is an Attorney-in-Fact of **Fidelity and Deposit Company of Maryland** and **Zurich American Insurance Company** in and which executed the above Instrument know(s) the corporate seal of said corporation; that the seal affixed to the within instrument is such corporate seal, and that he/she/they signed the said instrument and affixed the said seal as Attorney-in-Fact by authority of the Board of Directors of said corporation and by authority of this office under the standing resolution thereof.

My commission expires 4-7-2027

Notary Public

JESSE ENGEL
Notary Public, State of New York
No. 01EN0005306
Qualified in Westchester County
Commission Expires 4/07/2027

ZURICH AMERICAN INSURANCE COMPANY
COLONIAL AMERICAN CASUALTY AND SURETY COMPANY
FIDELITY AND DEPOSIT COMPANY OF MARYLAND
POWER OF ATTORNEY

KNOW ALL MEN BY THESE PRESENTS: That the ZURICH AMERICAN INSURANCE COMPANY, a corporation of the State of New York, the COLONIAL AMERICAN CASUALTY AND SURETY COMPANY, a corporation of the State of Illinois, and the FIDELITY AND DEPOSIT COMPANY OF MARYLAND a corporation of the State of Illinois (herein collectively called the "Companies"), by Robert D. Murray, Vice President, in pursuance of authority granted by Article V, Section 8, of the By-Laws of said Companies, which are set forth on the reverse side hereof and are hereby certified to be in full force and effect on the date hereof, do hereby nominate, constitute, and appoint Raymond C. CARMAN, Cornelia M. DESOUZA, Theresa A. LANFRANCO, Mary L. PADILLA, of Uniondale, New York, its true and lawful agent and Attorney-in-Fact, to make, execute, seal and deliver, for, and on its behalf as surety, and as its act and deed: **any and all bonds and undertakings,** and the execution of such bonds or undertakings in pursuance of these presents, shall be as binding upon said Companies, as fully and amply, to all intents and purposes, as if they had been duly executed and acknowledged by the regularly elected officers of the ZURICH AMERICAN INSURANCE COMPANY at its office in New York, New York., the regularly elected officers of the COLONIAL AMERICAN CASUALTY AND SURETY COMPANY at its office in Owings Mills, Maryland., and the regularly elected officers of the FIDELITY AND DEPOSIT COMPANY OF MARYLAND at its office in Owings Mills, Maryland., in their own proper persons.

The said Vice President does hereby certify that the extract set forth on the reverse side hereof is a true copy of Article V, Section 8, of the By-Laws of said Companies, and is now in force.

IN WITNESS WHEREOF, the said Vice-President has hereunto subscribed his/her names and affixed the Corporate Seals of the said **ZURICH AMERICAN INSURANCE COMPANY, COLONIAL AMERICAN CASUALTY AND SURETY COMPANY, and FIDELITY AND DEPOSIT COMPANY OF MARYLAND**, this 8th day of May, A.D. 2024.

Colonial American Casualty and Surety Company CORPORATE SEAL
Zurich American Insurance Company CORPORATE SEAL 1927 NEW YORK
Fidelity and Deposit Company of Maryland CORPORATE SEAL 1890

ATTEST:
ZURICH AMERICAN INSURANCE COMPANY
COLONIAL AMERICAN CASUALTY AND SURETY COMPANY
FIDELITY AND DEPOSIT COMPANY OF MARYLAND

By: Robert D. Murray
Vice President

By: Dawn E. Brown
Secretary

State of Maryland
County of Baltimore

On this 8th day of May, A.D. 2024, before the subscriber, a Notary Public of the State of Maryland, duly commissioned and qualified, **Robert D. Murray, Vice President and Dawn E. Brown, Secretary** of the Companies, to me personally known to be the individuals and officers described in and who executed the preceding instrument, and acknowledged the execution of same, and being by me duly sworn, deposeth and saith, that he/she is the said officer of the Company aforesaid, and that the seals affixed to the preceding instrument are the Corporate Seals of said Companies, and that the said Corporate Seals and the signature as such officer were duly affixed and subscribed to the said instrument by the authority and direction of the said Corporations.

IN TESTIMONY WHEREOF, I have hereunto set my hand and affixed my Official Seal the day and year first above written.

Genevieve M. Maison

GENEVIEVE M. MAISON
NOTARY PUBLIC
BALTIMORE COUNTY, MD
My Commission Expires JANUARY 27, 2025

GENEVIEVE M. MAISON NOTARY PUBLIC BALTIMORE COUNTY, MD EXP. 01/27/2025

Authenticity of this bond can be confirmed at bondvalidator.zurichna.com or 410-559-8790

EXTRACT FROM BY-LAWS OF THE COMPANIES

"Article V, Section 8, Attorneys-in-Fact. The Chief Executive Officer, the President, or any Executive Vice President or Vice President may, by written instrument under the attested corporate seal, appoint attorneys-in-fact with authority to execute bonds, policies, recognizances, stipulations, undertakings, or other like instruments on behalf of the Company, and may authorize any officer or any such attorney-in-fact to affix the corporate seal thereto; and may with or without cause modify of revoke any such appointment or authority at any time."

CERTIFICATE

I, the undersigned, Vice President of the ZURICH AMERICAN INSURANCE COMPANY, the COLONIAL AMERICAN CASUALTY AND SURETY COMPANY, and the FIDELITY AND DEPOSIT COMPANY OF MARYLAND, do hereby certify that the foregoing Power of Attorney is still in full force and effect on the date of this certificate; and I do further certify that Article V, Section 8, of the By-Laws of the Companies is still in force.

This Power of Attorney and Certificate may be signed by facsimile under and by authority of the following resolution of the Board of Directors of the ZURICH AMERICAN INSURANCE COMPANY at a meeting duly called and held on the 15th day of December 1998.

RESOLVED: "That the signature of the President or a Vice President and the attesting signature of a Secretary or an Assistant Secretary and the Seal of the Company may be affixed by facsimile on any Power of Attorney...Any such Power or any certificate thereof bearing such facsimile signature and seal shall be valid and binding on the Company."

This Power of Attorney and Certificate may be signed by facsimile under and by authority of the following resolution of the Board of Directors of the COLONIAL AMERICAN CASUALTY AND SURETY COMPANY at a meeting duly called and held on the 5th day of May, 1994, and the following resolution of the Board of Directors of the FIDELITY AND DEPOSIT COMPANY OF MARYLAND at a meeting duly called and held on the 10th day of May, 1990.

RESOLVED: "That the facsimile or mechanically reproduced seal of the company and facsimile or mechanically reproduced signature of any Vice-President, Secretary, or Assistant Secretary of the Company, whether made heretofore or hereafter, wherever appearing upon a certified copy of any power of attorney issued by the Company, shall be valid and binding upon the Company with the same force and effect as though manually affixed.

IN TESTIMONY WHEREOF, I have hereunto subscribed my name and affixed the corporate seals of the said Companies, this 26th day of March, 2026.

Thomas O. McClellan
Vice President

TO REPORT A CLAIM WITH REGARD TO A SURETY BOND, PLEASE SUBMIT A COMPLETE DESCRIPTION OF THE CLAIM INCLUDING THE PRINCIPAL ON THE BOND, THE BOND NUMBER, AND YOUR CONTACT INFORMATION TO:

Zurich Surety Claims
1299 Zurich Way
Schaumburg, IL 60196-1056
reportsfclaims@zurichna.com
800-626-4577

Authenticity of this bond can be confirmed at bondvalidator.zurichna.com or 410-559-8790

THE FIDELITY AND DEPOSIT COMPANY

OF MARYLAND
1299 Zurich Way Schaumburg, IL 60196

Statement of Financial Condition
As Of December 31, 2025

ASSETS

Bonds	$ 163,187,715
Stocks	18,642,935
Cash and Short-Term Investments	4,039,704
Reinsurance Recoverable	58,043,167
Federal Income Tax Recoverable	0
Other Accounts Receivable	3,360,596
TOTAL ADMITTED ASSETS	$ 247,274,117

LIABILITIES, SURPLUS AND OTHER FUNDS

Reserve for Taxes and Expenses		$ 312,062
Ceded Reinsurance Premiums Payable		47,234,348
Remittances and Items Unallocated		3
Payable to parents, subs and affiliates		12,441,616
Other Liabilities		16,700
Securities Lending Collateral Liability		0
TOTAL LIABILITIES		$ 60,004,729
Capital Stock, Paid Up	$ 5,000,000	
Surplus	182,269,388	
Surplus as regards Policyholders		187,269,388
TOTAL		$ 247,274,117

Securities carried at $78,444,411 in the above statement are deposited with various states as required by law.

Securities carried on the basis prescribed by the National Association of Insurance Commissioners. On the basis of market quotations for all bonds and stocks owned, the Company's total admitted assets on December 31, 2025, would be $241,749,332 and surplus as regards policyholders $181,744,603.

I, LAURA J. LAZARCZYK, Corporate Secretary of the FIDELITY AND DEPOSIT COMPANY OF MARYLAND, do hereby certify that the foregoing statement is a correct exhibit of the assets and liabilities of the said Company on the 31st day of December 2025.

Laura J. Lazarczyk

Corporate Secretary

State of Illinois
City of Schaumburg } SS:

Subscribed and sworn to, before me, a Notary Public of the State of Illinois, in the City of Schaumburg, this 11th day of March 2026.

Grace Ibeth Herrera

Notary Public

OFFICIAL SEAL
GRACE IBETH HERRERA
Notary Public, State of Illinois
Commission No. 1018292
My Commission Expires
October 01, 2029

ZURICH AMERICAN INSURANCE COMPANY
COMPARATIVE BALANCE SHEET
4 WORLD TRADE CENTER, 150 GREENWICH STREET, NEW YORK, NY 10007
As of December 31, 2025 and December 31, 2024

	12/31/2025	12/31/2024
Assets		
Bonds	$ 14,986,706,885	$ 14,585,320,733
Preferred Stock	8,649,220	-
Common Stock	2,445,688,980	2,318,962,357
Real Estate	1,168,052,895	1,203,299,515
Other Invested Assets	1,661,661,653	1,557,095,337
Derivatives	4,612,289	9,084,392
Short-term Investments	9,454,286	538,419
Receivable for securities	17,002,072	76,176,280
Cash and cash equivalents	159,190,433	442,486,445
Securities lending reinvested collateral assets	-	-
Employee Trust for Deferred Compensation Plan	205,678,117	172,754,053
Total Cash and Invested Assets	$ 20,666,696,830	$ 20,365,717,530
Premiums Receivable	$ 5,286,640,545	$ 6,819,954,449
Funds Held with Reinsurers	1,990,265	2,283,644
Reinsurance Recoverable	1,528,748,870	1,502,965,418
Accrued Investment Income	140,489,639	129,291,204
Federal Income Tax Recoverable	691,280,386	714,744,916
Due from Affiliates	143,622,939	132,941,409
Other Assets	1,838,325,885	707,816,920
Total Assets	$ 30,297,795,359	$ 30,375,715,489
Liabilities and Policyholders' Surplus		
Liabilities:		
Loss and LAE Reserves	$ 12,563,528,099	$ 12,234,708,389
Unearned Premium Reserve	5,112,734,102	4,915,163,970
Funds Held with Reinsurers	904,983,002	773,420,047
Loss In Course of Payment	807,368,672	1,483,026,238
Commission Reserve	214,473,503	213,774,361
Federal Income Tax Payable	-	-
Remittances and Items Unallocated	207,095,477	243,519,684
Payable to parent, subs and affiliates	446,424,027	388,489,825
Provision for Reinsurance	15,307,495	64,258,573
Ceded Reinsurance Premiums Payable	2,104,794,885	2,159,392,851
Securities Lending Collateral Liability	-	-
Other Liabilities	1,884,772,781	2,065,429,910
Total Liabilities	$ 24,261,482,043	$ 24,541,183,850
Policyholders' Surplus:		
Common Capital Stock	$ 5,000,000	$ 5,000,000
Paid-In and Contributed Surplus	4,393,616,489	4,393,615,052
Surplus Notes	-	-
Special Surplus Funds	3,316,518	3,993,000
Cumulative Unrealized Gain	34,754,104	38,342,087
Unassigned Surplus	1,599,626,205	1,393,581,502
Total Policyholders' Surplus	$ 6,036,313,316	$ 5,834,531,641
Total Liabilities and Policyholders' Surplus	$ 30,297,795,359	$ 30,375,715,490

I, LAURA J. LAZARCZYK, Corporate Secretary of ZURICH AMERICAN INSURANCE COMPANY do hereby certify that the foregoing statement is a correct exhibit of the assets and liabilities of the said Company, on the 31st day of December, 2025, according to the best of my information, knowledge and belief.

Signed by: Laura J. Lazarczyk

Corporate Secretary

State of Illinois
County of Cook } SS:

Subscribed and sworn to, before me, a Notary Public of the State of Illinois, in the City of Schaumburg, this 11th day of March, 2026.

Notary public

OFFICIAL SEAL
GRACE IBETH HERRERA
Notary Public, State of Illinois
Commission No. 1018292
My Commission Expires
October 01, 2029

.INTERNAL USE ONLY

LABOR LAW ARTICLE 8 - NYC PUBLIC WORKS

Workers, Laborers and Mechanics employed on a public work project must receive not less than the prevailing rate of wage and benefits for the classification of work performed by each upon such public work. Pursuant to New York Labor Law Article 8 the Comptroller of the City of New York has promulgated this schedule solely for Workers, Laborers and Mechanics engaged by private contractors on New York City public work projects. Prevailing rates are required to be annexed to and form part of the public work contract pursuant to Labor Law section 220 (3).

This schedule is a compilation of separate determinations of the prevailing rate of wage and supplements made by the Comptroller for each trade classification listed herein pursuant to Labor Law section 220 (5). The source of the wage and supplement rates, whether a collective bargaining agreement, survey data or other, is listed at the end of each classification.

Agency Chief Contracting Officers should contact the Bureau of Labor Law's Classification Unit with any questions concerning trade classifications, prevailing rates or prevailing practices with respect to procurement on New York City public work contracts. Contractors are advised to review the Comptroller's Prevailing Wage Schedule before bidding on public work contracts. Contractors with questions concerning trade classifications, prevailing rates or prevailing practices with respect to public work contracts in the procurement stage must contact the contracting agency responsible for the procurement.

Any error as to compensation under the prevailing wage law or other information as to trade classification, made by the contracting agency in the contract documents or in any other communication, will not preclude a finding against the contractor of prevailing wage violation.

Any questions concerning trade classifications, prevailing rates or prevailing practices on New York City public work contracts that have already been awarded may be directed to the Bureau of Labor Law's Classification Unit by calling (212) 669-4443. All callers must have the agency name and contract registration number available when calling with questions on public work contracts. Please direct all other compliance issues to: laborlaw@comptroller.nyc.gov or Bureau of Labor Law, Attn: Paul Brumlik, Office of the Comptroller, 1 Centre Street, Room 651, New York, N.Y. 10007.

Pursuant to Labor Law § 220 (3-a) (a), the appropriate schedule of prevailing wages and benefits must be posted in a prominent and accessible place at all public work sites along with the Construction Poster provided on our web site at comptroller.nyc.gov/wages. In addition, covered employees must be given the appropriate schedule of prevailing wages and benefits along with the Worker Notice provided on our web site at the time the public work project begins, and with the first paycheck to each such employee after July first of each year.

This schedule is applicable to work performed during the effective period, unless otherwise noted. Changes to this schedule are published on our web site comptroller.nyc.gov/wages. Contractors must pay the wages and supplements in effect when the worker, laborer, mechanic performs the work. Preliminary schedules for future one-year periods appear in the City Record on or about June 1 each succeeding year. Final schedules appear on or about July 1 in the City Record and on our web site comptroller.nyc.gov/wages.

Prevailing rates and ratios for apprentices are published in the Construction Apprentice Prevailing Wage Schedule. Pursuant to Labor Law § 220 (3-e), only apprentices who are individually

registered in a bona fide program to which the employer contractor is a participant, registered with the New York State Department of Labor, may be paid at the apprentice rates. Apprentices who are not so registered must be paid as journey persons.

New York City public work projects awarded pursuant to a Project Labor Agreement ("PLA") in accordance with Labor Law section 222 may have different labor standards for shift, premium and overtime work. Please refer to the PLA's pre-negotiated labor agreements for wage and benefit rates applicable to work performed outside of the regular workday. More information is available at the Mayor's Office of Contract Services (MOCS) web page at:

https://www.nyc.gov/site/mocs/regulations/project-labor-agreements.page

All the provisions of Labor Law Article 8 remain applicable to PLA work including, but not limited to, the enforcement of prevailing wage requirements by the Comptroller in accordance with the trade classifications in this schedule; however, we will enforce shift, premium, overtime and other non-standard rates as they appear in a project's pre-negotiated labor agreement.

In order to meet their obligation to provide prevailing supplemental benefits to each covered employee, employers must either:

1) **Provide bona fide fringe benefits which cost the employer no less than the prevailing supplemental benefits rate; or**
2) **Supplement the employee's hourly wage by an amount no less than the prevailing supplemental benefits rate; or**
3) **Provide a combination of bona fide fringe benefits and wage supplements which cost the employer no less than the prevailing supplemental benefits rate in total.**

Although prevailing wage laws do not require employers to provide bona fide fringe benefits (as opposed to wage supplements) to their employees, other laws may. For example, the Employee Retirement Income Security Act, 29 U.S.C. § 1001 et seq., the Patient Protection and Affordable Care Act, 42 U.S.C. § 18001 et seq., and the New York City Paid Sick Leave Law, N.Y.C. Admin. Code § 20-911 et seq., require certain employers to provide certain benefits to their employees. Labor agreements to which employers are a party may also require certain benefits. The Comptroller's Office does not enforce these laws or agreements.

Employers must provide prevailing supplemental benefits at the straight time rate for each hour worked unless otherwise noted in the classification.

Paid Holidays, Vacation and Sick Leave when listed must be paid or provided in addition to the prevailing hourly supplemental benefit rate.

For more information, please refer to the Comptroller's Prevailing Wage Law Regulations in Title 44 of the Rules of the City of New York, Chapter 2, available at comptroller.nyc.gov/wages.

Paul Brumlik
Director of Classifications
Bureau of Labor Law

TABLE OF CONTENTS

CLASSIFICATION	PAGE
ASBESTOS HANDLER	5
BLASTER	5
BOILERMAKER	6
BRICKLAYER	7
CARPENTER - BUILDING COMMERCIAL	8
CARPENTER - HEAVY CONSTRUCTION WORK	9
CARPENTER - HIGH RISE CONCRETE FORMS	10
CARPENTER - SIDEWALK SHED, SCAFFOLD AND HOIST	11
CARPENTER - WOOD WATER STORAGE TANK	12
CEMENT & CONCRETE WORKER	13
CEMENT MASON	14
CORE DRILLER	15
DERRICKPERSON AND RIGGER	16
DIVER	17
DOCKBUILDER - PILE DRIVER	18
DRIVER: TRUCK (TEAMSTER)	19
ELECTRICIAN	21
ELECTRICIAN - ALARM TECHNICIAN	28
ELECTRICIAN-STREET LIGHTING WORKER	29
ELEVATOR CONSTRUCTOR	31
ELEVATOR REPAIR & MAINTENANCE	31
ENGINEER	32
ENGINEER - CITY SURVEYOR AND CONSULTANT	38
ENGINEER - FIELD (BUILDING CONSTRUCTION)	39
ENGINEER - FIELD (HEAVY CONSTRUCTION)	40
ENGINEER - FIELD (STEEL ERECTION)	41
ENGINEER - OPERATING	42
FLAGGER	50
FLOOR COVERER	51
GLAZIER	52
GLAZIER - REPAIR & MAINTENANCE	53
HAZARDOUS MATERIAL HANDLER	54
HEAT AND FROST INSULATOR	54
HOUSE WRECKER	55
IRON WORKER - ORNAMENTAL	56
IRON WORKER - STRUCTURAL	57
LABORER – HEAVY & HIGHWAY	58
LABORER - PAVER & ROADBUILDER	59

LABORER - PAVER & ROADBUILDER LINE STRIPING (ROADWAY) 61
LANDSCAPING 62
MARBLE MECHANIC 64
MASON TENDER 66
MASON TENDER (INTERIOR DEMOLITION WORKER) 66
METALLIC LATHER 67
MILLWRIGHT 68
MOSAIC MECHANIC 69
PAINTER 70
PAINTER - BRIDGE & STRUCTURAL STEEL 71
PAINTER - METAL POLISHER 72
PAINTER - SIGN 73
PAPERHANGER 74
PLASTERER 75
PLASTERER - TENDER 76
PLUMBER 77
PLUMBER (MECHNICAL EQUIPMENT AND SERVICE) 78
PLUMBER (RESIDENTIAL RATES FOR 1, 2 AND 3 FAMILY HOME CONSTRUCTION) 79
PLUMBER: PUMP & TANK 80
POINTER, WATERPROOFER, CAULKER, SANDBLASTER, STEAMBLASTER 81
ROOFER 81
SHEET METAL WORKER 82
SHEET METAL WORKER - SPECIALTY 83
SHIPYARD WORKER 84
SIGN ERECTOR 86
STEAMFITTER 87
STEAMFITTER - REFRIGERATION AND AIR CONDITIONER 88
STONE MASON - SETTER 89
TAPER 89
TELECOMMUNICATION WORKER 90
TILE FINISHER 91
TILE LAYER - SETTER 92
TIMBERPERSON 93
TUNNEL WORKER 94
UTILITY LOCATOR 96
WELDER 98

ASBESTOS HANDLER

SEE HAZARDOUS MATERIAL HANDLER

BLASTER

Blaster

Effective Period: 7/1/2025 - 6/30/2026
Wage Rate per Hour: $58.81
Supplemental Benefit Rate per Hour: $55.73

Blaster - Hydraulic Trac Drill

Effective Period: 7/1/2025 - 6/30/2026
Wage Rate per Hour: $52.95
Supplemental Benefit Rate per Hour: $55.73

Blaster - Wagon: Air Trac: Quarry Bar: Drillrunners

Effective Period: 7/1/2025 - 6/30/2026
Wage Rate per Hour: $52.12
Supplemental Benefit Rate per Hour: $55.73

Blaster - Journeyperson

(Laborer, Chipper/Jackhammer including Walk Behind Self Propelled Hydraulic Asphalt and Concrete Breakers and Hydro (Water) Demolition, Powder Carrier, Hydraulic Chuck Tender, Chuck Tender and Nipper)

Effective Period: 7/1/2025 - 6/30/2026
Wage Rate per Hour: $45.60
Supplemental Benefit Rate per Hour: $55.73

Blaster - Magazine Keepers: (Watch Person)

Effective Period: 7/1/2025 - 6/30/2026
Wage Rate per Hour: $22.80
Supplemental Benefit Rate per Hour: $55.73

Overtime Description

Paid Holidays: Labor Day, Thanksgiving Day.

Excluding Supplemental Benefits.

Overtime
Time and one half the regular rate after an 8 hour day.
Time and one half the regular rate for Saturday.
Double time the regular rate for Sunday.

Overtime Holidays
Double time the regular rate for work on the following holiday(s).
New Year's Day
Memorial Day
Independence Day
Labor Day
Columbus Day
Thanksgiving Day
Christmas Day

Shift Rates
When two shifts are employed, single time rate shall be paid for each shift. When three shifts are found necessary, each shift shall work seven and one half hours (7 ½), but shall be paid for eight (8) hours of labor, and be permitted one half hour for lunch.

(Local #731)

BOILERMAKER

Boilermaker

Effective Period: 7/1/2025 - 6/30/2026
Wage Rate per Hour: $68.88
Supplemental Benefit Rate per Hour: $49.83
Supplemental Note: For time and one half overtime - $74.17 For double overtime - $98.51

Overtime Description
For Repair and Maintenance work:
Time and one half the regular rate after an 8 hour day.
Time and one half the regular rate for Saturday.
Double time the regular rate for Sunday.
For New Construction work:
Double time the regular rate after an 8 hour day.
Double time the regular time rate for Saturday.
Double time the regular rate for Sunday.

Overtime Holidays
Double time the regular rate for work on the following holiday(s).

New Year's Day
President's Day
Memorial Day
Independence Day
Columbus Day
Election Day
Veteran's Day
Thanksgiving Day
Christmas Day

Quadruple time the regular rate for work on the following holiday(s).
Labor Day

Paid Holidays

Good Friday
Day after Thanksgiving
Day before Christmas
Day before New Year's Day

Shift Rates

On jobs requiring two (2) or three (3) shifts, the first shift shall work eight (8) hours at the regular straight-time hourly rate. The second shift shall work eight (8) hours and receive eight hours at the regular straight time hourly rate plus two dollars ($2.00) per hour. The third shift shall work eight (8) hours and receive eight hours at the regular straight time hourly rate plus two dollars and twenty-five cents ($2.25) per hour.

(Local #5)

BRICKLAYER

Bricklayer

Effective Period: 7/1/2025 - 6/30/2026
Wage Rate per Hour: $60.04
Supplemental Benefit Rate per Hour: $45.35

Overtime Description

Time and one half the regular rate after a 7 hour day. If working on a job that is predominately Pointer, Cleaner, Caulker work, then Time and one half the regular rate after an 8 hour day.

Overtime

Time and one half the regular rate for Saturday.
Double time the regular rate for Sunday.
Saturday may be used as a make-up day at straight time when a day is lost during that week to inclement weather.

Overtime Holidays

Double time the regular rate for work on the following holiday(s).
New Year's Day
President's Day
Memorial Day
Independence Day
Labor Day
Thanksgiving Day
Christmas Day

Paid Holidays

None

Shift Rates

The second shift wage rate shall be a 15% wage premium with no premium for supplemental benefits. There must be a first shift in order to work a second shift. When it is not possible to conduct alteration or repair work during regular working hours in a building occupied by tenants, eight hours will be paid at straight time rate for seven hours of work.

(Bricklayer District Council)

CARPENTER - BUILDING COMMERCIAL

Building Commercial

Effective Period: 7/1/2025 - 6/30/2026
Wage Rate per Hour: $59.05
Supplemental Benefit Rate per Hour: $49.08

Overtime

Time and one half the regular rate after an 8 hour day.
Time and one half the regular rate for Saturday.
Double time the regular rate for Sunday.
Saturday may be used as a make-up day at straight time when a day is lost during that week to inclement weather.

Overtime Holidays

Double time the regular rate for work on the following holiday(s).
New Year's Day
President's Day
Memorial Day
Independence Day
Labor Day
Columbus Day
Presidential Election Day

Thanksgiving Day
Day after Thanksgiving
Christmas Day

Paid Holidays
None

Shift Rates
The second shift will receive one hour at the double time rate of pay for the last hour of the shift; eight hours pay for seven hours of work, nine hours pay for eight hours of work. There must be a first shift in order to work a second shift. When it is not possible to conduct alteration or repair work during regular working hours in a building occupied by tenants, the rule for the second shift will apply.

(Carpenters District Council)

CARPENTER - HEAVY CONSTRUCTION WORK
(Construction of Engineered Structures and Building Foundations including all form work)

Heavy Construction Work

Effective Period: 7/1/2025 - 6/30/2026
Wage Rate per Hour: $61.59
Supplemental Benefit Rate per Hour: $56.84

Overtime
Time and one half the regular rate after an 8 hour day.
Time and one half the regular rate for Saturday.
Double time the regular rate for Sunday.
Saturday may be used as a make-up day at straight time when a day is lost during that week to inclement weather.

Overtime Holidays
Double time the regular rate for work on the following holiday(s).
New Year's Day
President's Day
Memorial Day
Independence Day
Labor Day
Columbus Day
Presidential Election Day
Thanksgiving Day
Christmas Day

Paid Holidays
None

Shift Rates
Off shift work commencing between 5:00 P.M. and 11:00 P.M. shall work eight and one half hours allowing for one half hour for lunch. The wage rate shall be 113% of the straight time hourly wage rate and the supplemental benefits shall be paid at the straight time rate. When two (2) or more shifts of Carpenters are employed, single time will be paid for each shift.

(Carpenters District Council)

CARPENTER - HIGH RISE CONCRETE FORMS
(Excludes Engineered Structures and Building Foundations)

Carpenter High Rise A

Effective Period: 7/1/2025 - 6/30/2026
Wage Rate per Hour: $51.48
Supplemental Benefit Rate per Hour: $44.74

Carpenter High Rise B

Carpenter High Rise B worker is excluded from high risk operations such as erection decking, perimeter debris netting, leading edge work, self-climbing form systems, and the installation of cocoon systems unless directly supervised by a Carpenter High Rise A worker.

Effective Period: 7/1/2025 - 6/30/2026
Wage Rate per Hour: $40.89
Supplemental Benefit Rate per Hour: $18.05

Overtime
Time and one half the regular rate after an 8 hour day.
Time and one half the regular rate for Saturday.
Double time the regular rate for Sunday.
Saturday may be used as a make-up day at straight time when a day is lost during that week to inclement weather.

Overtime Holidays
Time and one half the regular rate for work on the following holiday(s).
New Year's Day
President's Day
Good Friday

Memorial Day
Independence Day
Labor Day
Columbus Day
Presidential Election Day
Thanksgiving Day
Christmas Day

Paid Holidays
None

Shift Rates
The second shift wage rate shall be 113% of the straight time hourly wage rate. However, any shift beginning after 5:00 P.M. shall be paid at time and one half the regular hourly rate. There must be a first shift in order to work a second shift. When it is not possible to conduct alteration or repair work during regular working hours in a building occupied by tenants, the rule for the second shift will apply.

(Carpenters District Council)

CARPENTER - SIDEWALK SHED, SCAFFOLD AND HOIST

Carpenter - Hod Hoist

(Assisted by Mason Tender)

Effective Period: 7/1/2025 - 6/30/2026
Wage Rate per Hour: $56.20
Supplemental Benefit Rate per Hour: $49.95

Overtime
Time and one half the regular rate after an 8 hour day.
Time and one half the regular rate for Saturday.
Double time the regular rate for Sunday.
Saturday may be used as a make-up day at straight time when a day is lost during that week to inclement weather.

Overtime Holidays
Double time the regular rate for work on the following holiday(s).
New Year's Day
President's Day
Memorial Day
Independence Day
Labor Day

Columbus Day
Presidential Election Day
Thanksgiving Day
Day after Thanksgiving
Christmas Day

Paid Holidays
None

Shift Rates
The second shift will receive 112% of the straight time hourly rate. Benefit fund contributions shall be paid at the straight time rate. There must be a first shift in order to work a second shift. When it is not possible to conduct alteration or repair work during regular working hours in a building occupied by tenants, the rule for the second shift will apply.

(Carpenters District Council)

CARPENTER - WOOD WATER STORAGE TANK

Tank Mechanic

Effective Period: 7/1/2025 - 6/30/2026
Wage Rate per Hour: $38.83
Supplemental Benefit Rate per Hour: $26.06

Tank Helper

Effective Period: 7/1/2025 - 6/30/2026
Wage Rate per Hour: $30.44
Supplemental Benefit Rate per Hour: $26.06

Overtime
Time and one half the regular rate after an 8 hour day.
Time and one half the regular rate for Saturday.
Double time the regular rate for Sunday.
Time and one half the regular rate for work on a holiday plus the day's pay.

Paid Holidays
New Year's Day
President's Day
Good Friday
Memorial Day
Independence Day
Labor Day

Columbus Day
Thanksgiving Day
Day after Thanksgiving
1/2 day on Christmas Eve if work is performed in the A.M.
Christmas Day
1/2 day on New Year's Eve if work is performed in the A.M.

Vacation

Employed for one (1) year.....one (1) week vacation (40 hours)
Employed for three (3) years.....two (2) weeks vacation (80 hours)
Employed for more than twenty (20) years.....three (3) weeks vacation (120 hours)

SICK LEAVE:
Two (2) sick days after being employed for twenty (20) years.

(Carpenters District Council)

CEMENT & CONCRETE WORKER

Building Work

Cement & Concrete Worker

Effective Period: 7/1/2025 - 6/30/2026
Wage Rate per Hour: $47.28
Supplemental Benefit Rate per Hour: $34.20
Supplemental Note: $39.20 on Saturdays; $44.20 on Sundays & Holidays

Cement & Concrete Worker - (Hired after 2/6/2016)

Effective Period: 7/1/2025 - 6/30/2026
Wage Rate per Hour: $36.80
Supplemental Benefit Rate per Hour: $26.20
Supplemental Note: $29.20 on Saturdays; $32.20 on Sundays & Holidays

Overtime Description

Time and one half the regular rate after 7 hour day (time and one half the regular rate after an 8 hour day when working with Dockbuilders on pile cap forms and for work below street level to the top of the foundation wall, not to exceed 2 feet or 3 feet above the sidewalk-brick shelf, when working on the foundation and structure.)

Overtime

Time and one half the regular rate for Saturday.
Double time the regular rate for Sunday.

Overtime Holidays

Double time the regular rate for work on the following holiday(s).
New Year's Day
President's Day
Good Friday
Memorial Day
Independence Day
Labor Day
Columbus Day
Presidential Election Day
Thanksgiving Day
Christmas Day

Paid Holidays

1/2 day before Christmas Day
1/2 day before New Year's Day

Shift Rates

On shift work extending over a twenty-four hour period, all shifts are paid at straight time.

(Cement & Concrete Workers District Council 16)

CEMENT MASON

Cement Mason

Effective Period: 7/1/2025 - 6/30/2026
Wage Rate per Hour: $59.87
Supplemental Benefit Rate per Hour: $34.76
Supplemental Note: Supplemental benefit time and one half rate: $63.22; Double time rate: double the base supplemental benefit rate.

Overtime Description

Time and one-half the regular rate after an 8 hour day, double time the regular rate after 10 hours. Time and one-half the regular rate on Saturday, double time the regular rate after 10 hours. Double time the regular rate on Sunday. Four Days a week at Ten (10) hours straight time is allowed.

Overtime Holidays

Double time the regular rate for work on the following holiday(s).
New Year's Day
President's Day
Good Friday
Memorial Day
Independence Day
Labor Day
Columbus Day
Presidential Election Day

Thanksgiving Day
Christmas Day

Paid Holidays

Any worker who reports to work on Christmas Eve or New Year's Eve pursuant to his employer's instruction shall be entitled to three (3) hours afternoon pay without working.

Shift Rates

For off shift work, (at times other than the regular 7:00 A.M. to 3:30 P.M. work day) a cement mason shall be paid at the regular hourly rate plus a 25% per hour differential.

(Local #780) (BCA)

CORE DRILLER

Test Boring

Core Driller

Effective Period: 7/1/2025 - 6/30/2026
Wage Rate per Hour: $47.88
Supplemental Benefit Rate per Hour: $34.35

Core Driller Helper

Effective Period: 7/1/2025 - 6/30/2026
Wage Rate per Hour: $37.58
Supplemental Benefit Rate per Hour: $34.35

Core Driller Helper(Third year in the industry)

Effective Period: 7/1/2025 - 6/30/2026
Wage Rate per Hour: $33.80
Supplemental Benefit Rate per Hour: $34.35

Core Driller Helper (Second year in the industry)

Effective Period: 7/1/2025 - 6/30/2026
Wage Rate per Hour: $30.04
Supplemental Benefit Rate per Hour: $34.35

Core Driller Helper (First year in the industry)

Effective Period: 7/1/2025 - 6/30/2026
Wage Rate per Hour: $26.26
Supplemental Benefit Rate per Hour: $34.35

Overtime Description
Time and one half the regular rate for work on a holiday plus Holiday pay when worked.

Overtime
Time and one half the regular rate after an 8 hour day.
Time and one half the regular rate for Saturday.
Double time the regular rate for Sunday.
Time and one half the regular rate for work on the following holiday(s).

Paid Holidays
New Year's Day
Memorial Day
Independence Day
Labor Day
Veteran's Day
Thanksgiving Day
Christmas Day

Shift Rates
When two (2) or more shifts are employed, single time shall be paid for each shift, but those employees employed on a shift other than from 8:00 A.M. to 5:00 P.M. shall, in addition, receive two dollars ($2.00) per hour differential for each hour worked. When three (3) shifts are needed, each shift shall work seven and one-half (7 ½) hours paid for eight (8) hours of labor and be permitted one-half (½) hour for mealtime.

(Carpenters District Council)

DERRICKPERSON AND RIGGER

Derrick Person & Rigger

Effective Period: 7/1/2025 - 6/30/2026
Wage Rate per Hour: $61.11
Supplemental Benefit Rate per Hour: $62.71

Derrick Person & Rigger - Site Work

Assists the Stone Mason-Setter in the setting of stone and paving stone.

Effective Period: 7/1/2025 - 6/30/2026

Wage Rate per Hour: $48.40
Supplemental Benefit Rate per Hour: $49.70

Overtime Description
The first two hours of overtime on weekdays and the first seven hours of work on Saturdays are paid at time and one half for wages and supplemental benefits. All additional overtimes is paid at double time for wages and supplemental benefits.

Overtime
Double time the regular rate for Sunday.

Overtime Holidays
Double time the regular rate for work on the following holiday(s).
New Year's Day
Washington's Birthday
Good Friday
Memorial Day
Independence Day
Labor Day
Thanksgiving Day
Christmas Day

Paid Holidays
1/2 day on Christmas Eve if work is performed in the A.M.

(Local #197)

DIVER

Diver (Marine)

Effective Period: 7/1/2025 - 6/30/2026
Wage Rate per Hour: $76.46
Supplemental Benefit Rate per Hour: $56.84

Diver Tender (Marine)

Effective Period: 7/1/2025 - 6/30/2026
Wage Rate per Hour: $56.00
Supplemental Benefit Rate per Hour: $56.84

Overtime
Time and one half the regular rate after an 8 hour day.

Time and one half the regular rate for Saturday.
Double time the regular rate for Sunday.
Saturday may be used as a make-up day at straight time when a day is lost during that week to inclement weather.

Overtime Holidays

Double time the regular rate for work on the following holiday(s).
New Year's Day
President's Day
Memorial Day
Independence Day
Labor Day
Columbus Day
Presidential Election Day
Thanksgiving Day
Christmas Day

Paid Holidays

None

Shift Rates

When three shifts are utilized each shift shall work seven and one half-hours (7 1/2 hours) and paid for 8 hours, allowing for one half hour for lunch.

(Carpenters District Council)

DOCKBUILDER - PILE DRIVER

Dockbuilder - Pile Driver

Effective Period: 7/1/2025 - 6/30/2026
Wage Rate per Hour: $61.59
Supplemental Benefit Rate per Hour: $56.84

Overtime

Time and one half the regular rate after an 8 hour day.
Time and one half the regular rate for Saturday.
Double time the regular rate for Sunday.
Saturday may be used as a make-up day at straight time when a day is lost during that week to inclement weather.

Overtime Holidays

Double time the regular rate for work on the following holiday(s).
New Year's Day
President's Day

Memorial Day
Independence Day
Labor Day
Columbus Day
Presidential Election Day
Thanksgiving Day
Christmas Day

Paid Holidays

None

Shift Rates

Off shift work commencing between 5:00 P.M. and 11:00 P.M. shall work eight and one half hours allowing for one half hour for lunch. The wage rate shall be 113% of the straight time hourly wage rate and the supplemental benefits shall be paid at the straight time rate. When two (2) or more shifts of Dockbuilders are employed, single time will be paid for each shift.

(Carpenters District Council)

DRIVER: TRUCK (TEAMSTER)

Including work involving the delivery to and hauling from such worksites of aggregate supply construction materials and any time spent loading/unloading

Driver - Dump Truck

Effective Period: 7/1/2025 - 6/30/2026
Wage Rate per Hour: $46.12
Supplemental Benefit Rate per Hour: $59.65
Supplemental Note: Over 40 hours worked: at time and one half rate - $25.50; at double time rate - $34.00

Driver - Tractor Trailer

Effective Period: 7/1/2025 - 6/30/2026
Wage Rate per Hour: $48.82
Supplemental Benefit Rate per Hour: $57.65
Supplemental Note: Over 40 hours worked: at time and one half rate - $26.33; at double time rate - $35.10

Driver - Euclid & Turnapull Operator

Effective Period: 7/1/2025 - 6/30/2026

Wage Rate per Hour: $49.38
Supplemental Benefit Rate per Hour: $57.65
Supplemental Note: Over 40 hours worked: at time and one half rate - $26.33; at double time rate - $35.10

Overtime Description

For Paid Holidays: Holiday pay for all holidays shall be prorated based two hours per day for each day worked in the holiday week, not to exceed 8 hours of holiday pay.

Overtime

Time and one half the regular rate after an 8 hour day.
Time and one half the regular rate for Saturday.
Double time the regular rate for Sunday.

Overtime Holidays

Double time the regular rate for work on the following holiday(s).
New Year's Day
Martin Luther King Jr. Day
President's Day
Memorial Day
Independence Day
Labor Day
Columbus Day
Veteran's Day
Thanksgiving Day
Christmas Day

Paid Holidays

New Year's Day
Martin Luther King Jr. Day
President's Day
Memorial Day
Independence Day
Labor Day
Columbus Day
Veteran's Day
Thanksgiving Day
Christmas Day

Shift Rates

Off shift work commencing between 6:00 P.M. and 5:00 A.M. shall work eight and one half (8 1/2) hours allowing for one half hour for lunch

---

Driver Redi-Mix (Sand & Gravel)

Effective Period: 7/1/2025 - 6/30/2026
Wage Rate per Hour: $44.50
Supplemental Benefit Rate per Hour: $52.22
Supplemental Note: Over 40 hours worked: time and one half rate $22.35; double time rate $29.80

Overtime Description

For Paid Holidays: Employees who do not work on a contractual holiday shall be compensated two (2) hours extra pay in straight time wages and benefits for every day on which the Employee does not pass up a day's work during the calendar week (Sunday through Saturday) of the holiday, up to a maximum of ten (10) hours in wages and eight (8) hours in benefit contributions for the holiday

Overtime

Time and one half the regular rate after an 8 hour day.
Time and one half the regular rate for Saturday.
Double time the regular rate for Sunday.

Overtime Holidays

Double time the regular rate for work on the following holiday(s).
Martin Luther King Jr. Day
President's Day
Columbus Day
Veteran's Day

Triple time the regular rate for work on the following holiday(s).
New Year's Day
Memorial Day
Independence Day
Labor Day
Thanksgiving Day
Christmas Day

Paid Holidays

New Year's Day
Martin Luther King Jr. Day
President's Day
Memorial Day
Independence Day
Labor Day
Columbus Day
Election Day
Thanksgiving Day
Christmas Day

(Local #282)

ELECTRICIAN

(Including installation of low voltage cabling carrying data, video and/or voice on building construction/alteration/renovation projects.)

Electrician "A" (Regular Day / Day Shift)

Effective Period: 7/1/2025 - 1/1/2026
Wage Rate per Hour: $62.00
Supplemental Benefit Rate per Hour: $66.90
*** Supplemental Note: See Supplemental Benefit Rate per Hour Note below**

Effective Period: 1/2/2026 - 4/15/2026
Wage Rate per Hour: $62.00
Supplemental Benefit Rate per Hour: $67.40
*** Supplemental Note: See Supplemental Benefit Rate per Hour Note below**

Effective Period: 4/16/2026 - 6/30/2026
Wage Rate per Hour: $64.00
Supplemental Benefit Rate per Hour: $70.28
*** Supplemental Note: See Supplemental Benefit Rate per Hour Note below**

Electrician "A" (Regular Day Overtime after 7 hrs / Day Shift Overtime after 8 hrs)

Effective Period: 7/1/2025 - 1/1/2026
Wage Rate per Hour: $93.00
Supplemental Benefit Rate per Hour: $68.90
*** Supplemental Note: See Supplemental Benefit Rate per Hour Note below**

Effective Period: 1/2/2026 - 4/15/2026
Wage Rate per Hour: $93.00
Supplemental Benefit Rate per Hour: $69.40
*** Supplemental Note: See Supplemental Benefit Rate per Hour Note below**

Effective Period: 4/16/2026 - 6/30/2026
Wage Rate per Hour: $96.00
Supplemental Benefit Rate per Hour: $72.34
*** Supplemental Note: See Supplemental Benefit Rate per Hour Note below**

Electrician "A" (Swing Shift)

Effective Period: 7/1/2025 - 1/1/2026
Wage Rate per Hour: $72.75
Supplemental Benefit Rate per Hour: $75.27
*** Supplemental Note: See Supplemental Benefit Rate per Hour Note below**

Effective Period: 1/2/2026 - 4/15/2026
Wage Rate per Hour: $72.75
Supplemental Benefit Rate per Hour: $75.77
*** Supplemental Note: See Supplemental Benefit Rate per Hour Note below**

Effective Period: 4/16/2026 - 6/30/2026
Wage Rate per Hour: $75.10
Supplemental Benefit Rate per Hour: $78.93

*** Supplemental Note: See Supplemental Benefit Rate per Hour Note below**

Electrician "A" (Swing Shift Overtime after 7.5 hours)

Effective Period: 7/1/2025 - 1/1/2026
Wage Rate per Hour: $109.13
Supplemental Benefit Rate per Hour: $77.61
*** Supplemental Note: See Supplemental Benefit Rate per Hour Note below**

Effective Period: 1/2/2026 - 4/15/2026
Wage Rate per Hour: $109.13
Supplemental Benefit Rate per Hour: $78.11
*** Supplemental Note: See Supplemental Benefit Rate per Hour Note below**

Effective Period: 4/16/2026 - 6/30/2026
Wage Rate per Hour: $112.65
Supplemental Benefit Rate per Hour: $81.35
*** Supplemental Note: See Supplemental Benefit Rate per Hour Note below**

Electrician "A" (Graveyard Shift)

Effective Period: 7/1/2025 - 1/1/2026
Wage Rate per Hour: $81.49
Supplemental Benefit Rate per Hour: $82.39
*** Supplemental Note: See Supplemental Benefit Rate per Hour Note below**

Effective Period: 1/2/2026 - 4/15/2026
Wage Rate per Hour: $81.49
Supplemental Benefit Rate per Hour: $82.89
*** Supplemental Note: See Supplemental Benefit Rate per Hour Note below**

Effective Period: 4/16/2026 - 6/30/2026
Wage Rate per Hour: $84.12
Supplemental Benefit Rate per Hour: $86.28
*** Supplemental Note: See Supplemental Benefit Rate per Hour Note below**

Electrician "A" (Graveyard Shift Overtime after 7 hours)

Effective Period: 7/1/2025 - 1/1/2026
Wage Rate per Hour: $122.24
Supplemental Benefit Rate per Hour: $85.01
*** Supplemental Note: See Supplemental Benefit Rate per Hour Note below**

Effective Period: 1/2/2026 - 4/15/2026
Wage Rate per Hour: $122.24
Supplemental Benefit Rate per Hour: $85.51
*** Supplemental Note: See Supplemental Benefit Rate per Hour Note below**

Effective Period: 4/16/2026 - 6/30/2026
Wage Rate per Hour: $126.18
Supplemental Benefit Rate per Hour: $88.98
*** Supplemental Note: See Supplemental Benefit Rate per Hour Note below**

*** Supplemental Benefit Rate per Hour Note**
In addition to the Supplemental Benefit Rates per Hour listed above, the employer must provide an additional 6.2% of taxable gross pay earned on covered work only. This additional Supplemental Benefit Rate will terminate when the employee has contributed the maximum annual Social Security tax required by law, on all work performed.

Overtime
Time and one half the regular rate after a 7 hour day.
Time and one half the regular rate for Saturday.
Time and one half the regular rate for Sunday.

Overtime Holidays
Time and one half the regular rate for work on a holiday.
New Year's Day
Martin Luther King Jr. Day
President's Day
Memorial Day
Independence Day
Labor Day
Columbus Day
Veteran's Day
Thanksgiving Day
Day after Thanksgiving
Christmas Day

Paid Holidays
None

Shift Rates
For multiple shifts of temporary light and/or power, the temporary light and/or power employee shall be paid for 8 hours at the straight time rate. For three or less workers performing 8 hours temporary light and/or power the supplemental benefit rate is $26.99, effective 1/2/2026 the supplemental benefit rate is $27.49, effective 4/16/2026 the supplemental benefit rate is $27.91 - See * Supplemental Benefit Rate per Hour Note above.

Electrician "M" 1st Year

"M" rated work shall be defined as jobbing: electrical work of limited duration and scope, also consisting of repairs and/or replacement of electrical and tele-data equipment. Includes all work necessary to retrofit, service, maintain and repair all kinds of lighting fixtures and local lighting controls and washing and cleaning of foregoing fixtures.

Effective Period: 7/1/2025 - 4/15/2026

Wage Rate per Hour: $27.50
Supplemental Benefit Rate per Hour: $26.29

Effective Period: 4/16/2026 - 6/30/2026
Wage Rate per Hour: $27.50
Supplemental Benefit Rate per Hour: $26.79

Electrician "M" 1st Year (Overtime)

Effective Period: 7/1/2025 - 4/15/2026
Wage Rate per Hour: $41.25
Supplemental Benefit Rate per Hour: $28.02

Effective Period: 4/16/2026 - 6/30/2026
Wage Rate per Hour: $41.25
Supplemental Benefit Rate per Hour: $28.52

Electrician "M" 2nd Year

Effective Period: 7/1/2025 - 4/15/2026
Wage Rate per Hour: $28.50
Supplemental Benefit Rate per Hour: $26.82

Effective Period: 4/16/2026 - 6/30/2026
Wage Rate per Hour: $28.50
Supplemental Benefit Rate per Hour: $27.32

Electrician "M" 2nd Year (Overtime)

Effective Period: 7/1/2025 - 4/15/2026
Wage Rate per Hour: $42.75
Supplemental Benefit Rate per Hour: $28.62

Effective Period: 4/16/2026 - 6/30/2026
Wage Rate per Hour: $42.75
Supplemental Benefit Rate per Hour: $29.12

Electrician "M" 3rd Year

Effective Period: 7/1/2025 - 4/15/2026
Wage Rate per Hour: $30.50
Supplemental Benefit Rate per Hour: $27.90

Effective Period: 4/16/2026 - 6/30/2026
Wage Rate per Hour: $30.50
Supplemental Benefit Rate per Hour: $28.40

Electrician "M" 3rd Year (Overtime)

Effective Period: 7/1/2025 - 4/15/2026
Wage Rate per Hour: $45.75
Supplemental Benefit Rate per Hour: $29.83

Effective Period: 4/16/2026 - 6/30/2026
Wage Rate per Hour: $45.75
Supplemental Benefit Rate per Hour: $30.33

Electrician "M" 4th Year

Effective Period: 7/1/2025 - 4/15/2026
Wage Rate per Hour: $33.50
Supplemental Benefit Rate per Hour: $29.51

Effective Period: 4/16/2026 - 6/30/2026
Wage Rate per Hour: $33.50
Supplemental Benefit Rate per Hour: $30.01

Electrician "M" 4th Year (Overtime)

Effective Period: 7/1/2025 - 4/15/2026
Wage Rate per Hour: $50.25
Supplemental Benefit Rate per Hour: $31.63

Effective Period: 4/16/2026 - 6/30/2026
Wage Rate per Hour: $50.25
Supplemental Benefit Rate per Hour: $32.13

Electrician "M" 5th Year

Effective Period: 7/1/2025 - 4/15/2026
Wage Rate per Hour: $36.50
Supplemental Benefit Rate per Hour: $31.12

Effective Period: 4/16/2026 - 6/30/2026
Wage Rate per Hour: $36.50
Supplemental Benefit Rate per Hour: $31.62

Electrician "M" 5th Year (Overtime)

Effective Period: 7/1/2025 - 4/15/2026
Wage Rate per Hour: $54.75
Supplemental Benefit Rate per Hour: $33.43

Effective Period: 4/16/2026 - 6/30/2026

Wage Rate per Hour: $54.75
Supplemental Benefit Rate per Hour: $33.93

Electrician "M" 6th Year

Effective Period: 7/1/2025 - 4/15/2026
Wage Rate per Hour: $43.50
Supplemental Benefit Rate per Hour: $34.89

Effective Period: 4/16/2026 - 6/30/2026
Wage Rate per Hour: $43.50
Supplemental Benefit Rate per Hour: $35.39

Electrician "M" 6th Year (Overtime)

Effective Period: 7/1/2025 - 4/15/2026
Wage Rate per Hour: $65.25
Supplemental Benefit Rate per Hour: $37.64

Effective Period: 4/16/2026 - 6/30/2026
Wage Rate per Hour: $65.25
Supplemental Benefit Rate per Hour: $38.14

Overtime
Time and one half the regular rate after an 8 hour day.
Time and one half the regular rate for Saturday.
Time and one half the regular rate for Sunday.

Overtime Holidays
Time and one half the regular rate for work on the following holiday(s).
New Year's Day
Martin Luther King Jr. Day
President's Day
Memorial Day
Independence Day
Labor Day
Columbus Day
Veteran's Day
Thanksgiving Day
Day after Thanksgiving
Christmas Day

Paid Holidays
None

(Local #3)

ELECTRICIAN - ALARM TECHNICIAN

(Scope of Work - Inspect, test, repair, and replace defective, malfunctioning, or broken devices, components and controls of Fire, Burglar and Security Systems)

Alarm Technician

Effective Period: 7/1/2025 - 6/30/2026
Wage Rate per Hour: $37.40
Supplemental Benefit Rate per Hour: $21.44
Supplemental Note: $19.31 only after 8 hours worked in a day

Overtime Description

Time and one half the regular rate for work on the following holidays: Columbus Day, Veterans Day, Day after Thanksgiving.
Double time the regular rate for work on the following holidays: New Year's day, Martin Luther King Jr. Day, President's Day, Memorial Day, Independence Day, Labor Day, Thanksgiving Day, Christmas Day.

Overtime

Time and one half the regular rate after an 8 hour day.
Time and one half the regular rate for Saturday.
Time and one half the regular rate for Sunday.

Paid Holidays

New Year's Day
Martin Luther King Jr. Day
President's Day
Memorial Day
Independence Day
Labor Day
Columbus Day
Veteran's Day
Thanksgiving Day
Day after Thanksgiving
Christmas Day

Shift Rates

Night Differential is based upon a ten percent (10%) differential between the hours of 4:00 P.M. and 12:30 A.M. and a fifteen percent (15%) differential for the hours 12:00 A.M. to 8:30 A.M.

Vacation

At least 1 year of employment.....ten (10) days
5 years or more of employment.....fifteen (15) days
10 years of employment.....twenty (20) days
Plus one Personal Day per year

Sick Days:
One day per Year. Up to 4 vacation days may be used as sick days.

(Local #3)

ELECTRICIAN-STREET LIGHTING WORKER

Electrician - Electro Pole Electrician

Effective Period: 7/1/2025 - 12/31/2025
Wage Rate per Hour: $62.00
Supplemental Benefit Rate per Hour: $69.01
*** Supplemental Note: See Supplemental Benefit Rate per Hour Note below**

Effective Period: 1/1/2026 - 4/21/2026
Wage Rate per Hour: $62.00
Supplemental Benefit Rate per Hour: $69.51
*** Supplemental Note: See Supplemental Benefit Rate per Hour Note below**

Effective Period: 4/22/2026 - 6/30/2026
Wage Rate per Hour: $64.00
Supplemental Benefit Rate per Hour: $72.46
*** Supplemental Note: See Supplemental Benefit Rate per Hour Note below**

Electrician - Electro Pole Foundation Installer

Effective Period: 7/1/2025 - 12/31/2025
Wage Rate per Hour: $47.66
Supplemental Benefit Rate per Hour: $51.27
*** Supplemental Note: See Supplemental Benefit Rate per Hour Note below**

Effective Period: 1/1/2026 - 4/21/2026
Wage Rate per Hour: $47.66
Supplemental Benefit Rate per Hour: $51.77
*** Supplemental Note: See Supplemental Benefit Rate per Hour Note below**

Effective Period: 4/22/2026 - 6/30/2026
Wage Rate per Hour: $49.66
Supplemental Benefit Rate per Hour: $53.91
*** Supplemental Note: See Supplemental Benefit Rate per Hour Note below**

Electrician - Electro Pole Maintainer

Effective Period: 7/1/2025 - 12/31/2025
Wage Rate per Hour: $41.61

Supplemental Benefit Rate per Hour: $46.32

Effective Period: 1/1/2026 - 4/21/2026
Wage Rate per Hour: $41.61
Supplemental Benefit Rate per Hour: $46.82

Effective Period: 4/22/2026 - 6/30/2026
Wage Rate per Hour: $43.61
Supplemental Benefit Rate per Hour: $48.96
*** Supplemental Note: See Supplemental Benefit Rate per Hour Note below**

*** Supplemental Benefit Rate per Hour Note**
In addition to the Supplemental Benefit Rates per Hour listed above, the employer must provide an additional 6.2% of taxable gross pay earned on covered work only. This additional Supplemental Benefit Rate will terminate when the employee has contributed the maximum annual Social Security tax required by law, on all work performed.

Overtime Description

Electrician - Electro Pole Electrician: Time and one half the regular rate after a 7 hour day and after 5 consecutive days worked per week.
Electrician - Electro Pole Foundation Installer: Time and one half the regular rate after 8 hours within a 24 hour period and Saturday and Sunday.
Electrician - Electro Pole Maintainer: Time and one half the regular rate after a 7 hour day and after 5 consecutive days worked per week. Saturdays and Sundays may be used as a make-up day at straight time when a day is lost during the week to inclement weather.

Overtime Holidays

Time and one half the regular rate for work on the following holiday(s).
New Year's Day
Martin Luther King Jr. Day
President's Day
Memorial Day
Independence Day
Labor Day
Columbus Day
Veteran's Day
Thanksgiving Day
Day after Thanksgiving
Christmas Day

Paid Holidays

None

(Local #3)

ELEVATOR CONSTRUCTOR

Elevator Constructor

Effective Period: 7/1/2025 - 3/16/2026
Wage Rate per Hour: $83.27
Supplemental Benefit Rate per Hour: $42.33

Effective Period: 3/17/2026 - 6/30/2026
Wage Rate per Hour: $86.43
Supplemental Benefit Rate per Hour: $43.43

Overtime Description
For New Construction: work performed after an 8 hour day, Saturday, Sunday or between 5:30pm and 6:00am shall be paid at double time rate.

Existing buildings: work performed after an 8 hour day, Saturday, Sunday or between 6:00pm and 5:00 am shall be paid time and one half.

Overtime
Double time the regular rate for work on the following holiday(s).

Paid Holidays
New Year's Day
President's Day
Good Friday
Memorial Day
Independence Day
Labor Day
Columbus Day
Veteran's Day
Thanksgiving Day
Day after Thanksgiving
Christmas Day

Vacation
Employer contributes 8% of regular basic hourly rate as vacation pay for employees with more than 15 years of service, and 6% for employees with 5 to 15 years of service, and 4% for employees with less than 5 years of service.

(Local #1)

ELEVATOR REPAIR & MAINTENANCE

Elevator Service/Modernization Mechanic

Effective Period: 7/1/2025 - 3/16/2026
Wage Rate per Hour: $65.54
Supplemental Benefit Rate per Hour: $42.28

Effective Period: 3/17/2026 - 6/30/2026
Wage Rate per Hour: $68.06
Supplemental Benefit Rate per Hour: $43.38

Overtime Description
For Scheduled Service Work: Double time - work scheduled in advance by two or more workers performed on Sundays, Holidays, and between midnight and 5:00am.

Overtime
Time and one half the regular rate after an 8 hour day.
Time and one half the regular rate for Saturday.
Time and one half the regular rate for Sunday.
Time and one half the regular rate for work on a holiday plus the day's pay.

Paid Holidays
New Year's Day
President's Day
Good Friday
Memorial Day
Independence Day
Labor Day
Columbus Day
Veteran's Day
Thanksgiving Day
Day after Thanksgiving
Christmas Day

Shift Rates
Afternoon shift - regularly hourly rate plus a (15%) fifteen percent differential. Graveyard shift - time and one half the regular rate.

Vacation
Employer contributes 8% of regular basic hourly rate as vacation pay for employees with more than 15 years of service, and 6% for employees with 5 to 15 years of service, and 4% for employees with less than 5 years of service.

(Local #1)

ENGINEER

Engineer - Heavy Construction Operating Engineer I

Cherrypickers 20 tons and over and Loaders (rubber tired and/or tractor type with a manufacturer's minimum rated capacity of six cubic yards and over).

Effective Period: 7/1/2025 - 6/30/2026
Wage Rate per Hour: $78.33
Supplemental Benefit Rate per Hour: $50.01
Supplemental Note: $92.62 on overtime
Shift Wage Rate: $125.33

Engineer - Heavy Construction Operating Engineer II

Backhoes, Basin Machines, Groover, Mechanical Sweepers, Bobcat, Boom Truck, Barrier Transport (Barrier Mover) & machines of similar nature. Operation of Churn Drills and machines of a similar nature, Stetco Silent Hoist and machines of similar nature, Vac-Alls, Meyers Machines, John Beam and machines of a similar nature, Ross Carriers and Travel Lifts and machines of a similar nature, Bulldozers, Scrapers and Turn-a-Pulls: Tugger Hoists (Used exclusively for handling excavated material); Tractors with attachments, Hyster and Roustabout Cranes, Cherrypickers. Austin Western, Grove and machines of a similar nature, Scoopmobiles, Monorails, Conveyors, Trenchers: Loaders-Rubber Tired and Tractor: Barber Greene and Eimco Loaders and Eimco Backhoes; Mighty Midget and similar breakers and Tampers, Curb and Gutter Pavers and Motor Patrol, Motor Graders and all machines of a similar nature. Locomotives 10 Tons or under. Mini-Max, Break-Tech and machines of a similar nature; Milling machines, robotic and demolition machines and machines of a similar nature, shot blaster, skid steer machines and machines of a similar nature including bobcat, pile rig rubber-tired excavator (37,000 lbs. and under), 2 person auger.

Effective Period: 7/1/2025 - 6/30/2026
Wage Rate per Hour: $75.84
Supplemental Benefit Rate per Hour: $50.01
Supplemental Note: $92.62 on overtime
Shift Wage Rate: $121.34

Engineer - Heavy Construction Operating Engineer III

Minor Equipment such as Tractors, Post Hole Diggers, Ditch Witch (Walk Behind), Road Finishing Machines, Rollers five tons and under, Tugger Hoists, Dual Purpose Trucks, Fork Lifts, and Dempsey Dumpers, Fireperson.

Effective Period: 7/1/2025 - 6/30/2026
Wage Rate per Hour: $71.70
Supplemental Benefit Rate per Hour: $50.01
Supplemental Note: $92.62 on overtime
Shift Wage Rate: $114.72

Engineer - Heavy Construction Maintenance Engineer I

Installing, Repairing, Maintaining, Dismantling of all equipment including Steel Cutting, Bending and Heat Sealing Machines, Mechanical Heaters, Grout Pumps, Bentonite Pumps & Plants, Screening Machines, Fusion Coupling Machines, Tunnel Boring Machines Moles and Machines of a similar nature, Power Packs, Mechanical Hydraulic Jacks; all drill rigs including but not limited to Churn, Rotary Caisson, Raised Bore & Drills of a similar nature; Personnel, Inspection & Safety Boats or any boats used to perform functions of same, Mine Hoists, Whirlies, all Climbing Cranes, all Tower Cranes, including but not limited to Truck Mounted and Crawler Type and machines of similar nature; Maintaining Hydraulic Drills and machines of a similar nature; Well Point System-

Installation and dismantling; Burning, Welding, all Pumps regardless of size and/or motor power, except River Cofferdam Pumps and Wells Point Pumps; Motorized Buggies (three or more); equipment used in the cleaning and televising of sewers, but not limited to jet-rodder/vacuum truck, vacall/vactor, closed circuit television inspection equipment; high powered water pumps, jet pumps; screed machines and concrete finishing machines of a similar nature; vermeers.

Effective Period: 7/1/2025 - 6/30/2026
Wage Rate per Hour: $75.45
Supplemental Benefit Rate per Hour: $50.01
Supplemental Note: $92.62 on overtime
Shift Wage Rate: $120.72

Engineer - Heavy Construction Maintenance Engineer II

On Base Mounted Tower Cranes

Effective Period: 7/1/2025 - 6/30/2026
Wage Rate per Hour: $100.74
Supplemental Benefit Rate per Hour: $50.01
Supplemental Note: $92.62 on overtime
Shift Wage Rate: $161.18

Engineer - Heavy Construction Maintenance Engineer III

On Generators, Light Towers

Effective Period: 7/1/2025 - 6/30/2026
Wage Rate per Hour: $48.02
Supplemental Benefit Rate per Hour: $50.01
Supplemental Note: $92.62 on overtime
Shift Wage Rate: $76.83

Engineer - Heavy Construction Maintenance Engineer IV

On Pumps and Mixers including mud sucking

Effective Period: 7/1/2025 - 6/30/2026
Wage Rate per Hour: $49.39
Supplemental Benefit Rate per Hour: $50.01
Supplemental Note: $92.62 on overtime
Shift Wage Rate: $79.02

Engineer - Heavy Construction Service Engineer

Gradalls: Concrete Pumps: Power Houses: Driving Truck Cranes: Driving and Operating Fuel and Grease Trucks.

Effective Period: 7/1/2025 - 6/30/2026
Wage Rate per Hour: $67.50
Supplemental Benefit Rate per Hour: $50.01

Supplemental Note: $92.62 on overtime
Shift Wage Rate: $108.00

Engineer - Heavy Construction Service Mechanic

Shovels: Cranes: Draglines: Backhoes: Keystones: Pavers: Trenching Machines: Gunite Machines: Compressors (three (3) or more in Battery): Crawler Cranes- having a straight lattice boom with no attachment or luffing boom, no jib and no auxiliary attachment.

Effective Period: 7/1/2025 - 6/30/2026
Wage Rate per Hour: $45.09
Supplemental Benefit Rate per Hour: $50.01
Supplemental Note: $92.62 on overtime
Shift Wage Rate: $72.14

Engineer - Steel Erection Maintenance Engineers

Derrick, Travelers, Tower, Crawler Tower and Climbing Cranes

Effective Period: 7/1/2025 - 6/30/2026
Wage Rate per Hour: $72.71
Supplemental Benefit Rate per Hour: $50.01
Supplemental Note: $92.62 on overtime
Shift Wage Rate: $116.34

Engineer - Steel Erection Oiler I

On a Truck Crane

Effective Period: 7/1/2025 - 6/30/2026
Wage Rate per Hour: $67.75
Supplemental Benefit Rate per Hour: $50.01
Supplemental Note: $92.62 on overtime
Shift Wage Rate: $108.40

Engineer - Steel Erection Oiler II

On a Crawler Crane

Effective Period: 7/1/2025 - 6/30/2026
Wage Rate per Hour: $47.58
Supplemental Benefit Rate per Hour: $50.01
Supplemental Note: $92.62 on overtime
Shift Wage Rate: $76.13

Overtime Description

On jobs of more than one shift, if the next shift employee fails to report for work through any cause over which the employer has no control, the employee on duty who works the next shift continues to work at the single time rate.

Overtime

Double time the regular rate after an 8 hour day.
Double time the regular time rate for Saturday.
Double time the regular rate for Sunday.
Double time the regular rate for work on the following holiday(s).

Paid Holidays

New Year's Day
Martin Luther King Jr. Day
President's Day
Memorial Day
Independence Day
Labor Day
Columbus Day
Veteran's Day
Thanksgiving Day
Day after Thanksgiving
Christmas Day

Engineer - Building Work Maintenance Engineers I

Installing, repairing, maintaining, dismantling (of all equipment including: Steel Cutting and Bending Machines, Mechanical Heaters, Mine Hoists, Climbing Cranes, Tower Cranes, Linden Peine, Lorain, Liebherr, Mannes, or machines of a similar nature, Well Point Systems, Deep Well Pumps, Concrete Mixers with loading Device, Concrete Plants, Motor Generators when used for temporary power and lights), skid steer machines of a similar nature including bobcat.

Effective Period: 7/1/2025 - 6/30/2026
Wage Rate per Hour: $62.18
Supplemental Benefit Rate per Hour: $49.01
Supplemental Note: $90.80 on overtime

Engineer - Building Work Maintenance Engineers II

On Pumps, Generators, Mixers and Heaters

Effective Period: 7/1/2025 - 6/30/2026
Wage Rate per Hour: $47.13
Supplemental Benefit Rate per Hour: $49.01
Supplemental Note: $90.80 on overtime

Engineer - Building Work Oilers I

All gasoline, electric, diesel or air operated Gradealls: Concrete Pumps, Overhead Cranes in Power Houses: Their duties shall be to assist the Engineer in oiling, greasing and repairing of all machines; Driving Truck

Cranes: Driving and Operating Fuel and Grease Trucks, Cherrypickers (hydraulic cranes) over 70,000 GVW, and machines of a similar nature.

Effective Period: 7/1/2025 - 6/30/2026
Wage Rate per Hour: $58.86
Supplemental Benefit Rate per Hour: $49.01
Supplemental Note: $90.80 on overtime

Engineer - Building Work Oilers II

Oilers on Crawler Cranes, Backhoes, Trenching Machines, Gunite Machines, Compressors (three or more in Battery).

Effective Period: 7/1/2025 - 6/30/2026
Wage Rate per Hour: $42.39
Supplemental Benefit Rate per Hour: $49.01
Supplemental Note: $90.80 on overtime

Overtime Description
On jobs of more than one shift, if an Employee fails to report for work through any cause over which the Employer has no control, the Employee on duty will continue to work at the rate of single time.

Overtime
Double time the regular rate after an 8 hour day.
Double time the regular time rate for Saturday.
Double time the regular rate for Sunday.
Double time the regular rate for work on the following holiday(s).

Paid Holidays
New Year's Day
Martin Luther King Jr. Day
President's Day
Memorial Day
Independence Day
Labor Day
Columbus Day
Veteran's Day
Thanksgiving Day
Christmas Day

Shift Rates
When two (2) or more shifts are employed, single time will be paid for each shift.

(Local #15)

ENGINEER - CITY SURVEYOR AND CONSULTANT

Party Chief

Effective Period: 7/1/2025 - 6/30/2026
Wage Rate per Hour: $46.32
Supplemental Benefit Rate per Hour: $29.32
Supplemental Note: Overtime Benefit Rate - $35.01 per hour (time & one half) $40.69 per hour (double time).

Instrument Person

Effective Period: 7/1/2025 - 6/30/2026
Wage Rate per Hour: $37.60
Supplemental Benefit Rate per Hour: $29.32
Supplemental Note: Overtime Benefit Rate - $35.01 per hour (time & one half) $40.69 per hour (double time).

Rodperson

Effective Period: 7/1/2025 - 6/30/2026
Wage Rate per Hour: $32.08
Supplemental Benefit Rate per Hour: $29.32
Supplemental Note: Overtime Benefit Rate - $35.01 per hour (time & one half) $40.69 per hour (double time).

Rodperson 1st Year

Effective Period: 7/1/2025 - 6/30/2026
Wage Rate per Hour: $25.00
Supplemental Benefit Rate per Hour: $29.32
Supplemental Note: Overtime Benefit Rate - $35.01 per hour (time & one half) $40.69per hour (double time).

Overtime Description

Time and one half the regular rate after an 8 hour day, Time and one half the regular rate for Saturday for the first eight hours worked, Double time the regular time rate for Saturday for work performed in excess of eight hours, Double time the regular rate for Sunday and Double time the regular rate for work on a holiday.

Paid Holidays

New Year's Day
Martin Luther King Jr. Day
President's Day
Memorial Day
Independence Day
Labor Day
Columbus Day
Veteran's Day
Thanksgiving Day
Day after Thanksgiving
Christmas Day
Employees must work at least one day in the payroll week in which the holiday occurs to receive the paid holiday

(Operating Engineer Local #15-D)

ENGINEER - FIELD (BUILDING CONSTRUCTION)

(Construction of Building Projects, Concrete Superstructures, etc.)

Field Engineer - BC Party Chief

Effective Period: 7/1/2025 - 6/30/2026
Wage Rate per Hour: $70.53
Supplemental Benefit Rate per Hour: $44.03
Supplemental Note: Overtime Benefit Rate - $62.35 per hour (time & one half) $80.66 per hour (double time).

Field Engineer - BC Instrument Person

Effective Period: 7/1/2025 - 6/30/2026
Wage Rate per Hour: $50.03
Supplemental Benefit Rate per Hour: $44.03
Supplemental Note: Overtime Benefit Rate - $62.35 per hour (time & one half) $80.66 per hour (double time).

Field Engineer - BC Rodperson

Effective Period: 7/1/2025 - 6/30/2026
Wage Rate per Hour: $30.96
Supplemental Benefit Rate per Hour: $44.03
Supplemental Note: Overtime Benefit Rate - $62.35 per hour (time & one half) $80.66 per hour (double time).

Overtime Description

Time and one half the regular rate after a 7 hour work and time and one half the regular rate for Saturday for the first seven hours worked, Double time the regular time rate for Saturday for work performed in excess of seven hours, Double time the regular rate for Sunday and Double time the regular rate for work on a holiday.

Paid Holidays

New Year's Day
Martin Luther King Jr. Day
President's Day
Memorial Day
Independence Day
Labor Day
Columbus Day
Veteran's Day
Thanksgiving Day
Day after Thanksgiving
Christmas Day

Employees must work at least one day in the payroll week in which the holiday occurs to receive the paid holiday

(Operating Engineer Local #15-D)

ENGINEER - FIELD (HEAVY CONSTRUCTION)

(Construction of Roads, Tunnels, Bridges, Sewers, Building Foundations, Engineering Structures etc.)

Field Engineer - HC Party Chief

Effective Period: 7/1/2025 - 6/30/2026
Wage Rate per Hour: $79.60
Supplemental Benefit Rate per Hour: $49.02
Supplemental Note: Overtime benefit rate - $69.71 per hour (time & one half), $90.40 per hour (double time).

Field Engineer - HC Instrument Person

Effective Period: 7/1/2025 - 6/30/2026
Wage Rate per Hour: $56.67
Supplemental Benefit Rate per Hour: $49.02
Supplemental Note: Overtime benefit rate - $69.71 per hour (time & one half), $90.40 per hour (double time).

Field Engineer - HC Rodperson

Effective Period: 7/1/2025 - 6/30/2026
Wage Rate per Hour: $46.48
Supplemental Benefit Rate per Hour: $49.02
Supplemental Note: Overtime benefit rate - $69.71 per hour (time & one half), $90.40 per hour (double time).

Field Engineer - HC Rodperson 1st Year

Effective Period: 7/1/2025 - 6/30/2026
Wage Rate per Hour: $25.00
Supplemental Benefit Rate per Hour: $49.02
Supplemental Note: Overtime benefit rate - $69.71 per hour (time & one half), $90.40 per hour (double time).

Overtime Description

Time and one half the regular rate after an 8 hour day, Time and one half the regular rate for Saturday for the first eight hours worked, Double time the regular time rate for Saturday for work performed in excess of eight hours, Double time the regular rate for Sunday and Double time the regular rate for work on a holiday.

Paid Holidays

New Year's Day
Martin Luther King Jr. Day
President's Day
Memorial Day
Independence Day
Labor Day
Columbus Day
Veteran's Day
Thanksgiving Day
Day after Thanksgiving
Christmas Day
Employees must work at least one day in the payroll week in which the holiday occurs to receive the paid holiday

(Operating Engineer Local #15-D)

ENGINEER - FIELD (STEEL ERECTION)

Field Engineer - Steel Erection Party Chief

Effective Period: 7/1/2025 - 6/30/2026
Wage Rate per Hour: $75.53
Supplemental Benefit Rate per Hour: $47.36
Supplemental Note: Overtime benefit rate - $67.22 per hour (time & one half), $87.07 per hour (double time).

Field Engineer - Steel Erection Instrument Person

Effective Period: 7/1/2025 - 6/30/2026
Wage Rate per Hour: $54.68
Supplemental Benefit Rate per Hour: $47.36
Supplemental Note: Overtime benefit rate - $67.22 per hour (time & one half), $87.07 per hour (double time).

Field Engineer - Steel Erection Rodperson

Effective Period: 7/1/2025 - 6/30/2026
Wage Rate per Hour: $34.80
Supplemental Benefit Rate per Hour: $47.36
Supplemental Note: Overtime benefit rate - $67.22 per hour (time & one half), $87.07 per hour (double time).

Field Engineer - Steel Erection Rodperson 1st Year

Effective Period: 7/1/2025 - 6/30/2026
Wage Rate per Hour: $25.00
Supplemental Benefit Rate per Hour: $47.36

Supplemental Note: Overtime benefit rate - $67.22 per hour (time & one half), $87.07 per hour (double time).

Overtime Description

Time and one half the regular rate for Saturday for the first eight hours worked.
Double time the regular rate for Saturday for work performed in excess of eight hours.

Overtime

Time and one half the regular rate after an 8 hour day.
Double time the regular rate for Sunday.
Double time the regular rate for work on the following holiday(s).

Paid Holidays

New Year's Day
Martin Luther King Jr. Day
President's Day
Memorial Day
Independence Day
Labor Day
Columbus Day
Veteran's Day
Thanksgiving Day
Day after Thanksgiving
Christmas Day
Employees must work at least one (1) day in the payroll week in which the holiday occurs to receive the paid holiday

(Operating Engineer Local #15-D)

ENGINEER - OPERATING

Operating Engineer - Road & Heavy Construction I

Back Filling Machines, Cranes, Mucking Machines and Dual Drum Paver.

Effective Period: 7/1/2025 - 6/30/2026
Wage Rate per Hour: $93.74
Supplemental Benefit Rate per Hour: $38.90
Supplemental Note: $71.50 overtime hours
Shift Wage Rate: $149.98

Operating Engineer - Road & Heavy Construction II

Backhoes, Power Shovels, Hydraulic Clam Shells, Steel Erection, Moles and machines of a similar nature.

Effective Period: 7/1/2025 - 6/30/2026

Wage Rate per Hour: $97.06
Supplemental Benefit Rate per Hour: $38.90
Supplemental Note: $71.50 overtime hours
Shift Wage Rate: $155.30

Operating Engineer - Road & Heavy Construction III

Mine Hoists (Cranes, etc. when used as Mine Hoists)

Effective Period: 7/1/2025 - 6/30/2026
Wage Rate per Hour: $100.18
Supplemental Benefit Rate per Hour: $38.90
Supplemental Note: $71.50 overtime hours
Shift Wage Rate: $160.29

Operating Engineer - Road & Heavy Construction IV

Gradealls, Keystones, Cranes on land or water (with digging buckets), Bridge Cranes, Vermeer Cutter and machines of a similar nature, Trenching Machines.

Effective Period: 7/1/2025 - 6/30/2026
Wage Rate per Hour: $97.75
Supplemental Benefit Rate per Hour: $38.90
Supplemental Note: $71.50 overtime hours
Shift Wage Rate: $156.40

Operating Engineer - Road & Heavy Construction V

Pile Drivers & Rigs (working alongside Dock Builder foreperson): Derrick Boats, Tunnel Shovels.

Effective Period: 7/1/2025 - 6/30/2026
Wage Rate per Hour: $95.83
Supplemental Benefit Rate per Hour: $38.90
Supplemental Note: $71.50 overtime hours
Shift Wage Rate: $153.33

Operating Engineer - Road & Heavy Construction VI

Mixers (Concrete with loading attachment), Concrete Pavers, Cableways, Land Derricks, Power Houses (Low Air Pressure Units).

Effective Period: 7/1/2025 - 6/30/2026
Wage Rate per Hour: $91.04
Supplemental Benefit Rate per Hour: $38.90
Supplemental Note: $71.50 overtime hours
Shift Wage Rate: $145.66

Operating Engineer - Road & Heavy Construction VII

Barrier Movers, Barrier Transport and Machines of a Similar Nature.

Effective Period: 7/1/2025 - 6/30/2026
Wage Rate per Hour: $73.56
Supplemental Benefit Rate per Hour: $38.90
Supplemental Note: $71.50 overtime hours
Shift Wage Rate: $117.70

Operating Engineer - Road & Heavy Construction VIII

Utility Compressors

Effective Period: 7/1/2025 - 6/30/2026
Wage Rate per Hour: $57.14
Supplemental Benefit Rate per Hour: $38.90
Supplemental Note: $71.50 overtime hours
Shift Wage Rate: $71.98

Operating Engineer - Road & Heavy Construction IX

Horizontal Boring Rig

Effective Period: 7/1/2025 - 6/30/2026
Wage Rate per Hour: $86.61
Supplemental Benefit Rate per Hour: $38.90
Supplemental Note: $71.50 overtime hours
Shift Wage Rate: $138.58

Operating Engineer - Road & Heavy Construction X

Elevators (manually operated as personnel hoist).

Effective Period: 7/1/2025 - 6/30/2026
Wage Rate per Hour: $79.62
Supplemental Benefit Rate per Hour: $38.90
Supplemental Note: $71.50 overtime hours
Shift Wage Rate: $127.39

Operating Engineer - Road & Heavy Construction XI

Compressors (Portable 3 or more in battery), Driving of Truck Mounted Compressors, Well-point Pumps, Tugger Machines Well Point Pumps, Churn Drill.

Effective Period: 7/1/2025 - 6/30/2026
Wage Rate per Hour: $61.87
Supplemental Benefit Rate per Hour: $38.90
Supplemental Note: $71.50 overtime hours

Shift Wage Rate: $98.99

Operating Engineer - Road & Heavy Construction XII

All Drills and Machines of a similar nature.

Effective Period: 7/1/2025 - 6/30/2026
Wage Rate per Hour: $92.01
Supplemental Benefit Rate per Hour: $38.90
Supplemental Note: $71.50 overtime hours
Shift Wage Rate: $147.22

Operating Engineer - Road & Heavy Construction XIII

Concrete Pumps, Concrete Plant, Stone Crushers, Double Drum Hoist, Power Houses (other than above).

Effective Period: 7/1/2025 - 6/30/2026
Wage Rate per Hour: $89.14
Supplemental Benefit Rate per Hour: $38.90
Supplemental Note: $71.50 overtime hours
Shift Wage Rate: $142.62

Operating Engineer - Road & Heavy Construction XIV

Concrete Mixer

Effective Period: 7/1/2025 - 6/30/2026
Wage Rate per Hour: $85.21
Supplemental Benefit Rate per Hour: $38.90
Supplemental Note: $71.50 overtime hours
Shift Wage Rate: $136.34

Operating Engineer - Road & Heavy Construction XV

Compressors (Portable Single or two in Battery, not over 100 feet apart), Pumps (River Cofferdam) and Welding Machines, Push Button Machines, All Engines Irrespective of Power (Power-Pac) used to drive auxiliary equipment, Air, Hydraulic, etc.

Effective Period: 7/1/2025 - 6/30/2026
Wage Rate per Hour: $57.52
Supplemental Benefit Rate per Hour: $38.90
Supplemental Note: $71.50 overtime hours
Shift Wage Rate: $92.03

Operating Engineer - Road & Heavy Construction XVI

Concrete Breaking Machines, Hoists (Single Drum), Load Masters, Locomotives (over ten tons) and Dinkies over ten tons, Hydraulic Crane-Second Engineer.

Effective Period: 7/1/2025 - 6/30/2026
Wage Rate per Hour: $81.38
Supplemental Benefit Rate per Hour: $38.90
Supplemental Note: $71.50 overtime hours
Shift Wage Rate: $130.21

Operating Engineer - Road & Heavy Construction XVII

On-Site concrete plant engineer, On-site Asphalt Plant Engineer, and Vibratory console.

Effective Period: 7/1/2025 - 6/30/2026
Wage Rate per Hour: $81.97
Supplemental Benefit Rate per Hour: $38.90
Supplemental Note: $71.50 overtime hours
Shift Wage Rate: $131.15

Operating Engineer - Road & Heavy Construction XVIII

Tower Crane

Effective Period: 7/1/2025 - 6/30/2026
Wage Rate per Hour: $117.60
Supplemental Benefit Rate per Hour: $38.90
Supplemental Note: $71.50 overtime hours
Shift Wage Rate: $188.16

Operating Engineer - Paving I

Asphalt Spreaders, Autograde (C.M.I.), Roto/Mil

Effective Period: 7/1/2025 - 6/30/2026
Wage Rate per Hour: $91.04
Supplemental Benefit Rate per Hour: $38.90
Supplemental Note: $71.50 overtime hours
Shift Wage Rate: $145.66

Operating Engineer - Paving II

Asphalt Roller

Effective Period: 7/1/2025 - 6/30/2026
Wage Rate per Hour: $88.72
Supplemental Benefit Rate per Hour: $38.90
Supplemental Note: $71.50 overtime hours
Shift Wage Rate: $141.95

Operating Engineer - Paving III

Asphalt Plants

Effective Period: 7/1/2025 - 6/30/2026
Wage Rate per Hour: $75.01
Supplemental Benefit Rate per Hour: $38.90
Supplemental Note: $71.50 overtime hours
Shift Wage Rate: $120.02

Operating Engineer - Concrete I

Cranes

Effective Period: 7/1/2025 - 6/30/2026
Wage Rate per Hour: $97.32
Supplemental Benefit Rate per Hour: $38.90
Supplemental Note: $71.50 overtime hours

Operating Engineer - Concrete II

Compressors

Effective Period: 7/1/2025 - 6/30/2026
Wage Rate per Hour: $57.96
Supplemental Benefit Rate per Hour: $38.90
Supplemental Note: $71.50 overtime hours

Operating Engineer - Concrete III

Micro-traps (Negative Air Machines), Vac-All Remediation System.

Effective Period: 7/1/2025 - 6/30/2026
Wage Rate per Hour: $77.80
Supplemental Benefit Rate per Hour: $38.90
Supplemental Note: $71.50 overtime hours

Operating Engineer - Steel Erection I

Three Drum Derricks

Effective Period: 7/1/2025 - 6/30/2026
Wage Rate per Hour: $101.49
Supplemental Benefit Rate per Hour: $38.90
Supplemental Note: $71.50 overtime hours
Shift Wage Rate: $162.38

Operating Engineer - Steel Erection II

Cranes, 2 Drum Derricks, Hydraulic Cranes, Fork Lifts and Boom Trucks.

Effective Period: 7/1/2025 - 6/30/2026
Wage Rate per Hour: $97.52
Supplemental Benefit Rate per Hour: $38.90
Supplemental Note: $71.50 overtime hours
Shift Wage Rate: $156.03

Operating Engineer - Steel Erection III

Compressors, Welding Machines.

Effective Period: 7/1/2025 - 6/30/2026
Wage Rate per Hour: $55.28
Supplemental Benefit Rate per Hour: $38.90
Supplemental Note: $71.50 overtime hours
Shift Wage Rate: $88.45

Operating Engineer - Steel Erection IV

Compressors - Not Combined with Welding Machine. (Public Works Only)

Effective Period: 7/1/2025 - 6/30/2026
Wage Rate per Hour: $52.63
Supplemental Benefit Rate per Hour: $38.90
Supplemental Note: $71.50 overtime hours
Shift Wage Rate: $84.21

Operating Engineer - Building Work I

Forklifts, Plaster (Platform machine), Plaster Bucket, Concrete Pump and all other equipment used for hoisting material.

Effective Period: 7/1/2025 - 6/30/2026
Wage Rate per Hour: $72.46
Supplemental Benefit Rate per Hour: $38.90
Supplemental Note: $71.50 overtime hours

Operating Engineer - Building Work II

Compressors, Welding Machines (Cutting Concrete-Tank Work), Paint Spraying, Sandblasting, Pumps (with the exclusion of Concrete Pumps), All Engines irrespective of Power (Power-Pac) used to drive Auxiliary Equipment, Air, Hydraulic, Jacking System, etc.

Effective Period: 7/1/2025 - 6/30/2026
Wage Rate per Hour: $54.12
Supplemental Benefit Rate per Hour: $38.90
Supplemental Note: $71.50 overtime hours

Operating Engineer - Building Work III

Double Drum

Effective Period: 7/1/2025 - 6/30/2026
Wage Rate per Hour: $92.32
Supplemental Benefit Rate per Hour: $38.90
Supplemental Note: $71.50 overtime hours

Operating Engineer - Building Work IV

Stone Derrick, Cranes, Hydraulic Cranes Boom Trucks.

Effective Period: 7/1/2025 - 6/30/2026
Wage Rate per Hour: $97.79
Supplemental Benefit Rate per Hour: $38.90
Supplemental Note: $71.50 overtime hours

Operating Engineer - Building Work V

Dismantling and Erection of Cranes, Relief Engineer.

Effective Period: 7/1/2025 - 6/30/2026
Wage Rate per Hour: $80.56
Supplemental Benefit Rate per Hour: $38.90
Supplemental Note: $71.50 overtime hours

Operating Engineer - Building Work VI

4 Pole Hoist, Single Drum Hoists.

Effective Period: 7/1/2025 - 6/30/2026
Wage Rate per Hour: $79.70
Supplemental Benefit Rate per Hour: $38.90
Supplemental Note: $71.50 overtime hours

Operating Engineer - Building Work VII

Rack & Pinion and House Cars

Effective Period: 7/1/2025 - 6/30/2026
Wage Rate per Hour: $63.27
Supplemental Benefit Rate per Hour: $38.90
Supplemental Note: $71.50 overtime hours
For New House Car projects Wage Rate per Hour $50.39
For New House Car projects: Supplemental Benefit overtime hours: $71.50

Overtime Description

On jobs of more than one shift, if an Employee fails to report for work through any cause over which the Employer has no control, the Employee on duty will continue to work at the rate of single time.

For House Cars and Rack & Pinion only: Overtime paid at time and one-half for all hours in excess of eight hours in a day, Saturday, Sunday and Holidays worked.

Overtime

Double time the regular rate after an 8 hour day.
Double time the regular time rate for Saturday.
Double time the regular rate for Sunday.
Double time the regular rate for work on the following holiday(s).

Paid Holidays

New Year's Day
Martin Luther King Jr. Day
President's Day
Memorial Day
Independence Day
Labor Day
Columbus Day
Veteran's Day
Thanksgiving Day
Day after Thanksgiving
Christmas Day

Shift Rates

When two (2) or more shifts are employed, single time will be paid for each shift.
For Steel Erection Only: Shifts may be worked at the single time rate at other than the regular working hours (8:00 A.M. to 4:30 P.M.) on the following work ONLY: Heavy construction jobs on work below the street level, over railroad tracks and on building jobs.

(Operating Engineer Local #14)

FLAGGER

Flagger to be paid at the rate of the journeyperson or apprentice in the trade performing the underlying work.

In accordance with the Comptroller's Prevailing Wage Memorandum Regarding Flag Persons dated June 1, 2024, this title includes traffic control duty only for City public works contracts and subcontracts solicited on or after July 1, 2024.

On City public works contracts and subcontracts solicited on or after July 1, 2024, traffic control worker to be paid at the rate of the journeyperson or apprentice in the trade performing the underlying work.

If the trade performing the underlying work does not regularly employ a flagger or traffic control worker, then one of the following titles must be used on such projects:
Laborer - Heavy & Highway
Laborer - Paver & Roadbuilder
Laborer - Paver & Roadbuilder Line Striping (Roadway)

FLOOR COVERER

(Interior vinyl composition tile, sheath vinyl linoleum and wood parquet tile including site preparation and synthetic turf not including site preparation)

Floor Coverer

Effective Period: 7/1/2025 - 6/30/2026
Wage Rate per Hour: $59.05
Supplemental Benefit Rate per Hour: $49.08

Overtime

Time and one half the regular rate after an 8 hour day.
Time and one half the regular rate for Saturday.
Double time the regular rate for Sunday.
Saturday may be used as a make-up day at straight time when a day is lost during that week to inclement weather.

Overtime Holidays

Double time the regular rate for work on the following holiday(s).
New Year's Day
President's Day
Memorial Day
Independence Day
Labor Day
Columbus Day
Presidential Election Day
Thanksgiving Day
Day after Thanksgiving

Day before Christmas
Christmas Day
Day before New Year's Day

Shift Rates

Two shifts may be utilized with the first shift working 8 a.m. to the end of the shift at straight time rate of pay. The wage rate for the second shift consisting of 7 hours shall be paid at 114.29% of straight time wage rate. The wage rate for the second shift consisting of 8 hours shall be paid 112.5% of the straight time wage rate. When it is not possible to conduct alteration or repair work during regular working hours in a building occupied by tenants, the rule for the second shift will apply.

(Carpenters District Council)

GLAZIER

(New Construction, Remodeling, and Alteration)

Glazier

Effective Period: 7/1/2025 - 10/31/2025
Wage Rate per Hour: $49.20
Supplemental Benefit Rate per Hour: $57.22

Effective Period: 11/1/2025 - 6/30/2026
Wage Rate per Hour: $49.45
Supplemental Benefit Rate per Hour: $58.62

Overtime

Time and one half the regular rate after an 8 hour day.
Time and one half the regular rate for Saturday.
Double time the regular rate for Sunday.

Overtime Holidays

Double time the regular rate for work on the following holiday(s).
New Year's Day
President's Day
Memorial Day
Labor Day
Thanksgiving Day
Day after Thanksgiving
Christmas Day

Paid Holidays

None

(Local #1281)

GLAZIER - REPAIR & MAINTENANCE

(For the Installation of Glass - All repair and maintenance work on a particular building.)

Craft Jurisdiction for repair, maintenance and fabrication

Plate glass replacement, Storm windows and storm doors, Herculite door repairs, Door closer repairs, Glass tinting.

Effective Period: 7/1/2025 - 10/31/2025
Wage Rate per Hour: $27.69
Supplemental Benefit Rate per Hour: $28.43

Effective Period: 11/1/2025 - 6/30/2026
Wage Rate per Hour: $28.32
Supplemental Benefit Rate per Hour: $28.68

Overtime

Time and one half the regular rate after an 8 hour day.
Double time the regular rate for Sunday.
Time and one half the regular rate for work on the following holiday(s).
Time and one half the regular hourly rate after 40 straight time hours in any work week.

Paid Holidays

New Year's Day
President's Day
Memorial Day
Independence Day
Labor Day
Thanksgiving Day
Day after Thanksgiving
Christmas Day
Employees must work at least one day in the payroll week in which the holiday occurs to receive the paid holiday

(Local #1281)

HAZARDOUS MATERIAL HANDLER

(Removal, abatement, encapsulation or decontamination of asbestos, lead, mold, or other toxic or hazardous waste/materials)

Handler

Effective Period: 7/1/2025 - 6/30/2026
Wage Rate per Hour: $39.95
Supplemental Benefit Rate per Hour: $23.76

Overtime

Time and one half the regular rate after an 8 hour day.
Time and one half the regular rate for Sunday.
Time and one half the regular hourly rate after 40 straight time hours in any work week.

Overtime Holidays

Time and one half the regular rate for work on the following holiday(s).
New Year's Day
Good Friday
Memorial Day
Independence Day
Labor Day
Thanksgiving Day
Christmas Day
Easter

Paid Holidays

None

(Local #78 and Local #12A)

HEAT AND FROST INSULATOR

Heat & Frost Insulator

Effective Period: 7/1/2025 - 6/30/2026
Wage Rate per Hour: $71.71
Supplemental Benefit Rate per Hour: $36.81

Overtime Description

Supplemental Benefit contributions are to be made at the applicable overtime rates.

Overtime

Time and one half the regular rate after an 8 hour day.
Time and one half the regular rate for Saturday.
Double time the regular rate for Sunday.

Overtime Holidays

Double time the regular rate for work on the following holiday(s).
New Year's Day
Martin Luther King Jr. Day
President's Day
Memorial Day
Independence Day
Columbus Day
Veteran's Day
Thanksgiving Day
Day after Thanksgiving
Christmas Day

Triple time the regular rate for work on the following holiday(s).
Labor Day

Paid Holidays

None

Shift Rates

The first shift shall work seven hours at the regular straight time rate. The second and third shift shall work seven hours the regular straight time hourly rate plus a fourteen percent wage and benefit premium. There must be a first shift to work the second shift, and a second shift to work the third shift. Off-hour jobs in occupied buildings may be worked on weekdays with an increment of one-dollar ($1.00) per hour and eight (8) hours pay for seven (7) hours worked.

(Local #12) (BCA)

HOUSE WRECKER
(TOTAL DEMOLITION)

House Wrecker - Tier A

On all work sites the first, second, eleventh and every third House Wrecker thereafter will be Tier A House Wreckers (i.e. 1st, 2nd, 11th, 14th etc). Other House Wreckers may be Tier B House Wreckers.

Effective Period: 7/1/2025 - 6/30/2026

Wage Rate per Hour: $40.00
Supplemental Benefit Rate per Hour: $32.40

House Wrecker - Tier B

Effective Period: 7/1/2025 - 6/30/2026
Wage Rate per Hour: $29.23
Supplemental Benefit Rate per Hour: $24.81

Overtime
Time and one half the regular rate after an 8 hour day.
Time and one half the regular rate for Saturday.
Double time the regular rate for Sunday.

Overtime Holidays
Double time the regular rate for work on the following holiday(s).
New Year's Day
President's Day
Memorial Day
Independence Day
Labor Day
Thanksgiving Day
Christmas Day

Paid Holidays
None

(Mason Tenders District Council)

IRON WORKER - ORNAMENTAL

Iron Worker - Ornamental

Effective Period: 7/1/2025 - 6/30/2026
Wage Rate per Hour: $48.15
Supplemental Benefit Rate per Hour: $67.62
Supplemental Note: Supplemental benefits are to be paid at the applicable overtime rate when overtime is in effect.

Overtime Description
Monday through Friday- the first eight hours are paid at straight time, the 9th and 10th hours are paid at time and one-half the regular rate, all additional weekday overtime is paid at double the regular rate. Saturdays- the first eight hours are paid at time and one-half the regular rate, double time thereafter. Sunday-all shifts are paid at double time. Four Days a week at Ten (10) hours straight time is allowed.

Overtime
Double time the regular rate for Sunday.

Overtime Holidays
Double time the regular rate for work on the following holiday(s).
New Year's Day
President's Day
Memorial Day
Independence Day
Labor Day
Thanksgiving Day
Christmas Day

Paid Holidays
None

Shift Rates
When two or three shifts are employed on a job, Monday through Friday, each shift will be paid eight (8) hours at the straight time rate for eight (8) hours of work; at time and one-half the regular straight time rate for the first two (2) hours of overtime worked beyond eight (8) hours; and at double time for all work thereafter. When it is not possible to conduct alteration or repair work during regular working hours in a building occupied by tenants, eight (8) hours will be paid at straight time rate for seven (7) hours of work, and all overtime shall be paid at time and one-half the regular straight time rates. On Saturday, Sundays and Holidays, time and one-half the regular straight time rate shall be paid for all work up to seven (7) hours and double time shall be paid for all work thereafter.

(Local #580)

IRON WORKER - STRUCTURAL

Iron Worker - Structural

Effective Period: 7/1/2025 - 6/30/2026
Wage Rate per Hour: $58.95
Supplemental Benefit Rate per Hour: $92.02
Supplemental Note: Supplemental benefits are to be paid at the applicable overtime rate when overtime is in effect.

Overtime Description
Monday through Friday- the first eight hours are paid at straight time, the 9th and 10th hours are paid at time and one-half the regular rate, all additional weekday overtime is paid at double the regular rate. Saturdays- the first eight hours are paid at time and one-half the regular rate, double time thereafter. Sunday-all shifts are paid at double time. Four Days a week at Ten (10) hours straight time is allowed.

Overtime

Time and one half the regular rate after an 8 hour day.
Time and one half the regular rate for Saturday.
Double time the regular rate for Sunday.

Overtime Holidays

Double time the regular rate for work on the following holiday(s).
New Year's Day
President's Day
Memorial Day
Independence Day
Labor Day
Thanksgiving Day
Christmas Day

Paid Holidays

1/2 day on Christmas Eve if work is performed in the A.M.
1/2 day on New Year's Eve if work is performed in the A.M.

Shift Rates

Monday through Friday - First Shift: First eight hours are paid at straight time, the 9th & 10th hours are paid at time and a half, double time paid thereafter. Second and third Shifts: First eight hours are paid at time and one-half, double time thereafter. Saturdays: All shifts, first eight hours paid at time and one-half, double time thereafter: Sunday all shifts are paid at double time.

Four (4), ten (10) hour days may be worked at straight time during a week, Monday thru Thursday.

(Local #40 & #361)

LABORER – HEAVY & HIGHWAY

(Foundation, Concrete, Excavating, Street Pipe Layer and Common)

Laborer - Heavy & Highway

Excavation and foundation work for buildings, heavy construction, street pipe laying, engineering work, and hazardous waste removal in connection with the above work. Landscaping tasks in connection with heavy construction work, engineering work and building projects. Projects include, but are not limited to pollution plants, sewers, parks, subways, bridges, highways, etc. In accordance with the Comptroller's Prevailing Wage Memorandum Regarding Flag Persons dated June 1, 2024, for City public work contracts and subcontracts solicited on or after July 1, 2024 only, includes traffic control duty associated with such projects.

Effective Period: 7/1/2025 - 6/30/2026
Wage Rate per Hour: $45.60
Supplemental Benefit Rate per Hour: $55.73

Overtime Description
Paid Holidays: Labor Day, Thanksgiving Day
No Supplemental Benefits are paid for non-worked holidays.

Overtime
Time and one half the regular rate after an 8 hour day.
Time and one half the regular rate for Saturday.
Double time the regular rate for Sunday.

Overtime Holidays
Double time the regular rate for work on the following holiday(s).
New Year's Day
Memorial Day
Independence Day
Labor Day
Columbus Day
Thanksgiving Day
Christmas Day

Shift Rates
When two shifts are employed, single time rate shall be paid for each shift. When three shifts are found necessary, each shift shall work seven and one half hours (7 ½), but shall be paid for eight (8) hours of labor, and be permitted one half hour for lunch.

(Local #731)

LABORER - PAVER & ROADBUILDER

Laborer - Paver & Roadbuilder

Paving and road construction work, regardless of material used, including but not limited to preparation of job sites, removal of old surfaces, asphalt and/or concrete, by whatever method, including but not limited to milling; laying of concrete; laying of asphalt for temporary, patchwork, and utility paving (but not production paving); site preparation and incidental work for installation of rubberized materials and similar surfaces; installation and repair of temporary construction fencing; slurry/seal coating, paving stones, maintenance of safety surfaces; play equipment installation, and other related work. In accordance with the Comptroller's Prevailing Wage Memorandum Regarding Flag Persons dated June 1, 2024, for City public work contracts and subcontracts solicited on or after July 1, 2024 only, includes traffic control duty associated with such projects.

Effective Period: 7/1/2025 - 6/30/2026
Wage Rate per Hour: $46.33
Supplemental Benefit Rate per Hour: $55.00
Supplemental Note: For time and one half overtime - $59.63 For double overtime - $64.25

Paver & Roadbuilder - Formsetter

Effective Period: 7/1/2025 - 6/30/2026
Wage Rate per Hour: $50.20
Supplemental Benefit Rate per Hour: $55.00
Supplemental Note: For time and one half overtime - $59.63 For double overtime - $64.25

Production Paver & Roadbuilder - Shoveler

General laborer (except removal of surfaces - see Paver and Roadbuilder-Laborer) including but not limited to tamper, AC paint and liquid tar work.

Effective Period: 7/1/2025 - 6/30/2026
Wage Rate per Hour: $46.33
Supplemental Benefit Rate per Hour: $55.00
Supplemental Note: For time and one half overtime - $59.63 For double overtime - $64.25

Production Paver & Roadbuilder - Raker

Effective Period: 7/1/2025 - 6/30/2026
Wage Rate per Hour: $50.20
Supplemental Benefit Rate per Hour: $55.00
Supplemental Note: For time and one half overtime - $59.63 For double overtime - $64.25

Production Paver & Roadbuilder - Screed Person

(Production paving is asphalt paving when using a paving machine or on a project where a paving machine is traditionally used)

Adjustment of paving machinery on production paving jobs.

Effective Period: 7/1/2025 - 6/30/2026
Wage Rate per Hour: $50.80
Supplemental Benefit Rate per Hour: $55.00
Supplemental Note: For time and one half overtime - $59.63 For double overtime - $64.25

Overtime Description

If an employee works New Year's Day or Christmas Day, they receive the single time rate plus 25%.

For Paid Holidays: Holiday pay for all holidays shall be prorated based two hours per day for each day worked in the holiday week, not to exceed 8 hours of holiday pay.

Overtime

Time and one half the regular rate after an 8 hour day.
Time and one half the regular rate for Saturday.
Double time the regular rate for Sunday.

Overtime Holidays

Double time the regular rate for work on the following holiday(s).

Memorial Day
Independence Day
Labor Day
Columbus Day
Thanksgiving Day

Paid Holidays

Memorial Day
Independence Day
Labor Day
Thanksgiving Day

Shift Rates

When two shifts are employed, the work period for each shift shall be a continuous eight (8) hours. When three shifts are employed, each shift will work seven and one half (7 ½) hours but will be paid for eight (8) hours at the straight time rate since only one half (1/2) hour is allowed for meal time.
When two or more shifts are employed, single time will be paid for each shift.

(Local #1010)

LABORER - PAVER & ROADBUILDER LINE STRIPING (ROADWAY)

(Road markings, applications of striping and surface coatings on Roadways, Bus lanes, Bike lanes & Pedestrian Plazas)

Striping - Machine Operator (Thermoplastic & Epoxy)

Effective Period: 7/1/2025 - 6/30/2026
Wage Rate per Hour: $42.00
Supplemental Benefit Rate per Hour: $21.17
Supplemental Note: For time and one half overtime - $22.87 For double overtime - $24.57

Lineperson - Crew Chief

Effective Period: 7/1/2025 - 6/30/2026
Wage Rate per Hour: $46.00
Supplemental Benefit Rate per Hour: $21.17
Supplemental Note: For time and one half overtime - $22.87 For double overtime - $24.57

Laborer: Striping Assistant - Green Infrastructure - Traffic Control

In accordance with the Comptroller's Prevailing Wage Memorandum Regarding Flag Persons dated June 1, 2024, for City public work contracts and subcontracts solicited on or after July 1, 2024 only, includes traffic control duty associated with such projects.

Effective Period: 7/1/2025 - 6/30/2026
Wage Rate per Hour: $40.00
Supplemental Benefit Rate per Hour: $21.17
Supplemental Note: For time and one half overtime - $22.87 For double overtime - $24.57

Overtime Description

For Paid Holidays: Employees will only receive Holiday Pay for holidays not worked if said employee worked both the regularly scheduled workday before and after the holiday.

Overtime

Time and one half the regular rate after an 8 hour day.
Time and one half the regular rate for Saturday.
Time and one half the regular rate for Sunday.
Time and one half the regular rate for work on the following holiday(s).

Paid Holidays

New Year's Day
Good Friday
Memorial Day
Independence Day
Labor Day
Columbus Day
Presidential Election Day
Thanksgiving Day
Christmas Day

Vacation

Vacation Employees with one to two years service shall accrue vacation based on hours worked: 250 hours worked - 1 day vacation; 500 hours worked - 2 days vacation; 750 hours worked - 3 days vacation; 900 hours worked - 4 days vacation; 1,000 hours worked - 5 days vacation. Employees with two to five years service receive two weeks vacation. Employees with five to twenty years service receive three weeks vacation. Employees with twenty to twenty-five years service receive four weeks vacation. Employees with 25 or more years service receive five weeks vacation.

(Local #1010)

LANDSCAPING

(Landscaping tasks, such as tree pruning, tree removing and spraying in connection with Green Infrastructure maintenance and the planting of street trees and trees in City parks, but not when such activities are performed as part of construction or reconstruction projects.)

Landscaper (Year 6 and above)

Effective Period: 7/1/2025 - 6/30/2026
Wage Rate per Hour: $38.94
Supplemental Benefit Rate per Hour: $18.55

Landscaper (Year 3 - 5)

Effective Period: 7/1/2025 - 6/30/2026
Wage Rate per Hour: $37.70
Supplemental Benefit Rate per Hour: $18.55

Landscaper (up to 3 years)

Effective Period: 7/1/2025 - 6/30/2026
Wage Rate per Hour: $34.60
Supplemental Benefit Rate per Hour: $18.55

Groundperson

Effective Period: 7/1/2025 - 6/30/2026
Wage Rate per Hour: $34.60
Supplemental Benefit Rate per Hour: $18.55

Tree Remover / Pruner

Effective Period: 7/1/2025 - 6/30/2026
Wage Rate per Hour: $45.17
Supplemental Benefit Rate per Hour: $18.55

Landscaper Sprayer (Pesticide Applicator)

Effective Period: 7/1/2025 - 6/30/2026
Wage Rate per Hour: $32.74
Supplemental Benefit Rate per Hour: $18.55

Watering - Plant Maintainer

Effective Period: 7/1/2025 - 6/30/2026
Wage Rate per Hour: $26.50
Supplemental Benefit Rate per Hour: $18.55

Overtime Description

For all overtime work performed, supplemental benefits shall include an additional seventy-five ($0.75) cents per hour.

Overtime

Time and one half the regular rate after an 8 hour day.
Time and one half the regular rate for Saturday.
Double time the regular rate for Sunday.
Time and one half the regular rate for work on a holiday plus the day's pay.

Paid Holidays

New Year's Day
Memorial Day
Independence Day
Labor Day
Thanksgiving Day
Christmas Day

Shift Rates

Work performed on a 4pm to 12am shift has a 15% differential. Work performed on a 12am to 8am shift has a 20% differential.

(Local #175)

MARBLE MECHANIC

Marble Setter

Effective Period: 7/1/2025 - 7/6/2025
Wage Rate per Hour: $59.21
Supplemental Benefit Rate per Hour: $44.46

Effective Period: 7/7/2025 - 6/30/2026
Wage Rate per Hour: $59.66
Supplemental Benefit Rate per Hour: $44.76

Marble Finisher

Effective Period: 7/1/2025 - 7/6/2025
Wage Rate per Hour: $45.67
Supplemental Benefit Rate per Hour: $41.36

Effective Period: 7/7/2025 - 6/30/2026
Wage Rate per Hour: $45.89
Supplemental Benefit Rate per Hour: $41.66

Marble Polisher

Effective Period: 7/1/2025 - 7/6/2025
Wage Rate per Hour: $44.68
Supplemental Benefit Rate per Hour: $34.31

Effective Period: 7/7/2025 - 6/30/2026
Wage Rate per Hour: $44.95
Supplemental Benefit Rate per Hour: $34.61

Marble Maintenance Finisher

Effective Period: 7/1/2025 - 7/6/2025
Wage Rate per Hour: $27.99
Supplemental Benefit Rate per Hour: $15.44

Effective Period: 7/7/2025 - 6/30/2026
Wage Rate per Hour: $28.15
Supplemental Benefit Rate per Hour: $15.69

Overtime Description
Supplemental Benefit contributions are to be made at the applicable overtime rates.

Overtime
Time and one half the regular rate after an 8 hour day.
Time and one half the regular rate for Saturday.
Double time the regular rate for Sunday.

Overtime Holidays
Double time the regular rate for work on the following holiday(s).
New Year's Day
President's Day
Good Friday
Memorial Day
Independence Day
Labor Day
Columbus Day
Veteran's Day
Thanksgiving Day
Day after Thanksgiving
Christmas Day

Paid Holidays
None

(Local #7)

MASON TENDER
Building Laborer

Mason Tender

Effective Period: 7/1/2025 - 6/30/2026
Wage Rate per Hour: $41.80
Supplemental Benefit Rate per Hour: $34.14

Overtime
Time and one half the regular rate after an 8 hour day.
Time and one half the regular rate for Saturday.
Double time the regular rate for Sunday.
Saturday may be used as a make-up day at straight time when a day is lost during that week to inclement weather.

Overtime Holidays
Double time the regular rate for work on the following holiday(s).
New Year's Day
President's Day
Memorial Day
Independence Day
Labor Day
Thanksgiving Day
Christmas Day

Paid Holidays
None

Shift Rates
The employer may work two (2) shifts with the first shift at the straight time wage rate and the second shift receiving eight (8) hours paid for seven (7) hours work at the straight time wage rate. When it is not possible to conduct alteration work during regular working hours in a building occupied by tenants, the rule for the second shift will apply

(Local #79)

MASON TENDER (INTERIOR DEMOLITION WORKER)

Mason Tender Tier A

Tier A Interior Demolition Worker performs all burning, chopping, and other technically skilled tasks related to interior demolition work.

Effective Period: 7/1/2025 - 6/30/2026
Wage Rate per Hour: $38.40
Supplemental Benefit Rate per Hour: $26.89

Mason Tender Tier B

Tier B Interior Demolition Worker performs manual work and work incidental to demolition work, such as loading and carting of debris from the work site to an area where it can be loaded in to bins/trucks for removal.

Effective Period: 7/1/2025 - 6/30/2026
Wage Rate per Hour: $27.59
Supplemental Benefit Rate per Hour: $21.21

Overtime
Time and one half the regular rate after an 8 hour day.
Time and one half the regular rate for Sunday.

Overtime Holidays
Double time the regular rate for work on the following holiday(s).
New Year's Day
President's Day
Memorial Day
Independence Day
Labor Day
Thanksgiving Day
Christmas Day

Paid Holidays
None

(Local #79)

METALLIC LATHER

Metallic Lather

Effective Period: 7/1/2025 - 6/30/2026
Wage Rate per Hour: $46.50
Supplemental Benefit Rate per Hour: $56.46
Supplemental Note: For time and one half overtime - $68.21 For double overtime - $89.86

Overtime
Time and one half the regular rate after an 8 hour day.
Time and one half the regular rate for Saturday.
Double time the regular rate for Sunday.

Overtime Holidays
Double time the regular rate for work on the following holiday(s).
New Year's Day
President's Day
Memorial Day
Independence Day
Labor Day
Columbus Day
Thanksgiving Day
Christmas Day

Paid Holidays
1/2 day on Christmas Eve if work is performed in the A.M.
1/2 day on New Year's Eve if work is performed in the A.M.

Shift Rates
Off-shift work outside of normal working hours shall receive straight time rate plus $12 per hour for the first eight (8) hours.

(Local #46)

MILLWRIGHT

Millwright

Effective Period: 7/1/2025 - 6/30/2026
Wage Rate per Hour: $60.83
Supplemental Benefit Rate per Hour: $59.18

Overtime
Time and one half the regular rate after an 8 hour day.
Time and one half the regular rate for Saturday.
Double time the regular rate for Sunday.

Overtime Holidays
Double time the regular rate for work on the following holiday(s).
New Year's Day
President's Day
Good Friday
Memorial Day

Independence Day
Labor Day
Columbus Day
Presidential Election Day
Veteran's Day
Thanksgiving Day
Christmas Day

Paid Holidays

1/2 day on Christmas Eve if work is performed in the A.M.
1/2 day on New Year's Eve if work is performed in the A.M.

Shift Rates

Second and third shifts receives the straight time rate of pay plus fifteen (15%) percent allowing for one half hour for a meal. There must be a first shift to work a second and third shift. All additional hours worked shall be paid at the time and one-half rate of pay plus fifteen (15%) percent for weekday hours.

(Local #740)

MOSAIC MECHANIC

Mosaic Mechanic - Mosaic & Terrazzo Mechanic

Effective Period: 7/1/2025 - 6/30/2026
Wage Rate per Hour: $54.77
Supplemental Benefit Rate per Hour: $48.42

Mosaic Mechanic - Mosaic & Terrazzo Finisher

Effective Period: 7/1/2025 - 6/30/2026
Wage Rate per Hour: $53.17
Supplemental Benefit Rate per Hour: $48.42

Mosaic Mechanic - Machine Operator Grinder

Effective Period: 7/1/2025 - 6/30/2026
Wage Rate per Hour: $53.17
Supplemental Benefit Rate per Hour: $48.42

Overtime

Time and one half the regular rate after an 8 hour day.
Time and one half the regular rate for Saturday.
Double time the regular rate for Sunday.

Overtime Holidays

Double time the regular rate for work on the following holiday(s).
New Year's Day
President's Day
Good Friday
Memorial Day
Independence Day
Labor Day
Columbus Day
Veteran's Day
Thanksgiving Day
Day after Thanksgiving
Christmas Day

Paid Holidays

None

(Local #7)

PAINTER

Painter - Brush & Roller

Effective Period: 7/1/2025 - 6/30/2026
Wage Rate per Hour: $44.75
Supplemental Benefit Rate per Hour: $44.13
Supplemental Note: $52.76 on overtime

Spray & Scaffold / Decorative / Sandblast

Effective Period: 7/1/2025 - 6/30/2026
Wage Rate per Hour: $47.75
Supplemental Benefit Rate per Hour: $44.13
Supplemental Note: $52.76 on overtime

Overtime

Time and one half the regular rate after a 7 hour day.
Time and one half the regular rate for Saturday.
Time and one half the regular rate for Sunday.

Overtime Holidays

Double time the regular rate for work on the following holiday(s).
New Year's Day
President's Day
Memorial Day

Independence Day
Labor Day
Thanksgiving Day
Day after Thanksgiving
Christmas Day

Paid Holidays
None

(District Council of Painters #9)

PAINTER - BRIDGE & STRUCTURAL STEEL

Painters on Structural Steel

Effective Period: 7/1/2025 - 6/30/2026
Wage Rate per Hour: $56.25
Supplemental Benefit Rate per Hour: $55.09

Painter - Power Tool

Effective Period: 7/1/2025 - 6/30/2026
Wage Rate per Hour: $64.70
Supplemental Benefit Rate per Hour: $55.09
Overtime Wage Rate: $7.00 above the "Painters on Structural Steel" overtime rate.

Overtime Description
Supplemental Benefits shall be paid for each hour worked, up to forty (40) hours per week for the period of May 1st to November 15th or up to fifty (50) hours per week for the period of November 16th to April 30th.

Overtime
Time and one half the regular rate after an 8 hour day.
Time and one half the regular rate for Saturday.
Time and one half the regular rate for Sunday.

Overtime Holidays
Double time the regular rate for work on the following holiday(s).
New Year's Day
Memorial Day
Independence Day
Labor Day
Thanksgiving Day
Christmas Day

Paid Holidays
None

Shift Rates
Second shift is paid at regular hourly wage rates plus a ten percent (10%) differential. There must be a first shift to work a second shift.

(Local #806)

PAINTER - METAL POLISHER

METAL POLISHER

Effective Period: 7/1/2025 - 6/30/2026
Wage Rate per Hour: $35.00
Supplemental Benefit Rate per Hour: $12.84

METAL POLISHER - NEW CONSTRUCTION

Effective Period: 7/1/2025 - 6/30/2026
Wage Rate per Hour: $35.95
Supplemental Benefit Rate per Hour: $12.84

METAL POLISHER - SCAFFOLD OVER 34 FEET

Effective Period: 7/1/2025 - 6/30/2026
Wage Rate per Hour: $38.50
Supplemental Benefit Rate per Hour: $12.84

ASSISTANT METAL POLISHER

Effective Period: 7/1/2025 - 6/30/2026
Wage Rate per Hour: $27.19
Supplemental Benefit Rate per Hour: $12.47

ASSISTANT METAL POLISHER - NEW CONSTRUCTION

Effective Period: 7/1/2025 - 6/30/2026
Wage Rate per Hour: $27.94
Supplemental Benefit Rate per Hour: $12.47

ASSISTANT METAL POLISHER - SCAFFOLD OVER 34 FEET

Effective Period: 7/1/2025 - 6/30/2026
Wage Rate per Hour: $29.69
Supplemental Benefit Rate per Hour: $12.47

Overtime Description
All work performed on Saturdays shall be paid at time-in-a half. The exception being; for suspended scaffold work and work deemed as a construction project; an eight (8) hour shift lost during the week due to circumstances beyond the control of the employer, up to a maximum of eight (8) hours per week, may be worked on Saturday at the straight time rate.

Holiday Pay
Double time the regular rate for work on the following Holiday plus the day's pay. Only employees who have completed one year of service, including any trial period shall be eligible for holiday pay.

Overtime
Time and one half the regular rate after an 8 hour day.
Time and one half the regular rate for Saturday.
Double time the regular rate for Sunday.
Saturday may be used as a make-up day at straight time when a day is lost during that week to inclement weather.

Paid Holidays
New Year's Day
Martin Luther King Jr. Day
President's Day
Memorial Day
Independence Day
Labor Day
Columbus Day
Veteran's Day
Thanksgiving Day
Day after Thanksgiving
Christmas Day

Shift Rates
Four Days a week at Ten (10) hours straight a day.

Local 8A-28A

PAINTER - SIGN

Sign Painter

Effective Period: 7/1/2025 - 6/30/2026
Wage Rate per Hour: $49.39
Supplemental Benefit Rate per Hour: $29.75

Assistant Sign Painter

Effective Period: 7/1/2025 - 6/30/2026
Wage Rate per Hour: $41.98
Supplemental Benefit Rate per Hour: $29.04

Overtime Description

If any employee is required to work on any of the paid holidays then the employee shall receive double time rate of wages as well as the holiday pay for that day.

Overtime

Time and one half the regular rate after an 8 hour day.
Time and one half the regular rate for Saturday.
Time and one half the regular rate for Sunday.

Paid Holidays

New Year's Day
President's Day
Memorial Day
Independence Day
Labor Day
Columbus Day
Election Day
Thanksgiving Day
Day after Thanksgiving
Christmas Day
Personal Day

Vacation

At least 1 year of employment.....1 week
2 years or more of employment.....2 weeks
8 years or more of employment.....3 weeks

(Local #8A-28A)

PAPERHANGER

Paperhanger

Effective Period: 7/1/2025 - 6/30/2026
Wage Rate per Hour: $48.02

Supplemental Benefit Rate per Hour: $45.56
Supplemental Note: Supplemental benefits are to be paid at the appropriate straight time and overtime rate.

Overtime
Time and one half the regular rate after a 7 hour day.
Time and one half the regular rate for Saturday.
Double time the regular rate for Sunday.

Overtime Holidays
Time and one half the regular rate for work on the following holiday(s).
New Year's Day
President's Day
Memorial Day
Independence Day
Labor Day
Thanksgiving Day
Day after Thanksgiving
Christmas Day

Paid Holidays
None

Shift Rates
Evening shift - 4:30 P.M. to 12:00 Midnight (regular rate of pay); any work performed before 7:00 A.M. shall be at time and one half the regular base rate of pay.

(District Council of Painters #9)

PLASTERER

Plasterer

Effective Period: 7/1/2025 - 6/30/2026
Wage Rate per Hour: $52.99
Supplemental Benefit Rate per Hour: $26.10

Overtime
Time and one half the regular rate after an 8 hour day.
Time and one half the regular rate for Saturday.
Double time the regular rate for Sunday.
Saturday may be used as a make-up day at straight time when a day is lost during that week to inclement weather.

Overtime Holidays

Double time the regular rate for work on the following holiday(s).
New Year's Day
President's Day
Memorial Day
Independence Day
Labor Day
Thanksgiving Day
Christmas Day

Paid Holidays
None

Shift Rates
When it is not possible to conduct work during regular working hours (between 6:30am and 4:30pm), a shift differential shall be paid at the regular hourly rate plus a twelve percent (12%) per hour differential. Workers on shift work shall be allowed a paid one-half hour meal break.

(Local #262)

PLASTERER - TENDER

Plasterer - Tender

Effective Period: 7/1/2025 - 6/30/2026
Wage Rate per Hour: $41.80
Supplemental Benefit Rate per Hour: $34.14

Overtime
Time and one half the regular rate after an 8 hour day.
Time and one half the regular rate for Saturday.
Double time the regular rate for Sunday.
Saturday may be used as a make-up day at straight time when a day is lost during that week to inclement weather.

Overtime Holidays
Double time the regular rate for work on the following holiday(s).
New Year's Day
Washington's Birthday
Memorial Day
Independence Day
Labor Day
Presidential Election Day
Thanksgiving Day
Christmas Day

Paid Holidays
None

Shift Rates
When work commences outside regular work hours, workers receive an hour additional (differential) wage and supplement payment. Eight hours pay for seven hours work or nine hours pay for eight hours work.

(Mason Tenders District Council)

PLUMBER

Plumber

Effective Period: 7/1/2025 - 6/30/2026
Wage Rate per Hour: $76.30
Supplemental Benefit Rate per Hour: $45.15
Supplemental Note: Double time shall be paid for supplemental benefits during overtime work.

Plumber - Temporary Services

Temporary Services - When there are no Plumbers on the job site, there may be three shifts designed to cover the entire twenty-four hour period, including weekends if necessary, at the following rate straight time.

Effective Period: 7/1/2025 - 6/30/2026
Wage Rate per Hour: $61.12
Supplemental Benefit Rate per Hour: $36.04
Supplemental Note: Double time shall be paid for supplemental benefits during overtime work.

Overtime Description
Where the plumbing contract price is one and one half million dollars ($1,500,000.00) or less, double time the regular rate after an 8 hour day.

Overtime
Double time the regular rate after a 7 hour day.
Double time the regular time rate for Saturday.
Double time the regular rate for Sunday.

Overtime Holidays
Double time the regular rate for work on the following holiday(s).
New Year's Day
President's Day
Memorial Day
Independence Day
Labor Day

Columbus Day
Veteran's Day
Thanksgiving Day
Day after Thanksgiving
Christmas Day

Shift Rates

Shift work, when directly specified in public agency or authority contract documents, and continues for a period of not less than ten (10) consecutive work days. A shift shall consist of seven (7) hours with one-half (1/2) hour for lunch after the first four (4) hours of each shift. A premium of thirty percent (30%) for wages and supplemental benefits on shift work performed Monday through Friday on the 4 P.M. and midnight shifts. For shift work performed on weekends the shift premium shall be fifty percent (50%) of wages and supplemental benefits. For shift work performed on holidays designated below, double time wages and supplemental benefits shall be paid. Also noted that the normal workday Monday through Friday 8:00 A.M. to 3:30 P.M. is not considered shift work, and therefore not subject to shift premium.

(Plumbers Local #1)

PLUMBER (MECHNICAL EQUIPMENT AND SERVICE)

Mechanical Equipment and Service work is any repair and/or replacement of the present plumbing system that does not change existing roughing or water supply lines. Projects regardless of work type which have approved plans and specifications wherein the plumbing exceeds $725,000 are excluded.

Plumber

Effective Period: 7/1/2025 - 6/30/2026
Wage Rate per Hour: $48.90
Supplemental Benefit Rate per Hour: $22.26

Overtime

Time and one half the regular rate after an 8 hour day.
Time and one half the regular rate for Saturday.
Time and one half the regular rate for Sunday.

Overtime Holidays

Double time the regular rate for work on the following holiday(s).
New Year's Day
President's Day
Memorial Day
Independence Day
Thanksgiving Day
Day after Thanksgiving

Christmas Day

Paid Holidays
None

(Plumbers Local # 1)

PLUMBER (RESIDENTIAL RATES FOR 1, 2 AND 3 FAMILY HOME CONSTRUCTION)

Effective Period: 7/1/2025 - 6/30/2026
Wage Rate per Hour: $53.02
Supplemental Benefit Rate per Hour: $32.33

Overtime
Double time the regular rate after an 8 hour day.
Double time the regular time rate for Saturday.
Double time the regular rate for Sunday.

Overtime Holidays
Double time the regular rate for work on the following holiday(s).
New Year's Day
President's Day
Memorial Day
Independence Day
Labor Day
Columbus Day
Veteran's Day
Thanksgiving Day
Day after Thanksgiving
Christmas Day

Paid Holidays
None

Shift Rates
Shift work, when directly specified in public agency or authority contract documents, and continues for a period of not less than ten (10) consecutive work days. A shift shall consist of seven (7) hours with one-half (1/2) hour for lunch after the first four (4) hours of each shift. A premium of thirty percent (30%) for wages and supplemental benefits on shift work performed Monday through Friday on the 4 P.M. and midnight shifts. For shift work performed on weekends the shift premium shall be fifty percent (50%) of wages and supplemental benefits. For shift work performed on holidays designated below, double time wages and supplemental benefits shall be paid. Also noted that the normal workday Monday through Friday 8:00 A.M. to 3:30 P.M. is not considered shift work, and therefore not subject to shift premium.

(Plumbers Local #1)

PLUMBER: PUMP & TANK

Oil Trades (Installation and Maintenance)

Plumber - Pump & Tank

Effective Period: 7/1/2025 - 6/30/2026
Wage Rate per Hour: $74.00
Supplemental Benefit Rate per Hour: $34.31

Overtime

Time and one half the regular rate after an 8 hour day.
Time and one half the regular rate for Saturday.
Time and one half the regular rate for Sunday.

Overtime Holidays

Time and one half the regular rate for work on the following holiday(s).
New Year's Day
President's Day
Memorial Day
Independence Day
Labor Day
Columbus Day
Election Day
Veteran's Day
Thanksgiving Day
Day after Thanksgiving
Christmas Day

Paid Holidays

None

Shift Rates

All work outside the regular workday (8:00 A.M. to 4:30 P.M.) is to be paid at time and one half the regular hourly rate

(Plumbers Local #1)

POINTER, WATERPROOFER, CAULKER, SANDBLASTER, STEAMBLASTER
(Exterior Building Renovation)

Journeyperson

Effective Period: 7/1/2025 - 6/30/2026
Wage Rate per Hour: $65.33
Supplemental Benefit Rate per Hour: $32.35

Overtime
Time and one half the regular rate after an 8 hour day.
Time and one half the regular rate for Saturday.
Time and one half the regular rate for Sunday.
Saturday may be used as a make-up day at straight time when a day is lost during that week to inclement weather.

Overtime Holidays
Time and one half the regular rate for work on the following holiday(s).
New Year's Day
Martin Luther King Jr. Day
President's Day
Memorial Day
Independence Day
Labor Day
Thanksgiving Day
Christmas Day

Paid Holidays
None

Shift Rates
All work outside the regular work day (an eight hour workday between the hours of 6:00 A.M. and 4:00 P.M.) is to be paid at time and one half the regular rate. However, the employer may establish one (1) or two (2) shifts starting at or after 4:00 P.M. to be paid at the regular hourly rate plus a 10% differential. For projects bid and performed after July 1, 2023, the first shift shall be paid at the regular hourly rate plus a 5% differential.

(Bricklayer District Council)

ROOFER

Roofer

Effective Period: 7/1/2025 - 6/30/2026
Wage Rate per Hour: $50.25
Supplemental Benefit Rate per Hour: $39.53

Overtime
Time and one half the regular rate after an 8 hour day.
Time and one half the regular rate for Saturday.
Time and one half the regular rate for Sunday.

Overtime Holidays
Time and one half the regular rate for work on the following holiday(s).
New Year's Day
Memorial Day
Independence Day
Labor Day
Thanksgiving Day
Christmas Day

Paid Holidays
None

Shift Rates
Second shift - Regular hourly rate plus a 10% differential. Third shift - Regular hourly rate plus a 15% differential. There must be a first shift to work the second shift, and a second shift to work the third shift. All other work outside the regular work day (an eight hour workday between the hours of 5:00 A.M. and 4:00 P.M.) is to be paid at time and one half the regular rate.

(Local #8)

SHEET METAL WORKER

Sheet Metal Worker

Effective Period: 7/1/2025 - 6/30/2026
Wage Rate per Hour: $54.60
Supplemental Benefit Rate per Hour: $60.18
Supplemental Note: Supplemental benefit contributions are to be made at the applicable overtime rates.

Sheet Metal Worker - Fan Maintenance

(The temporary operation of fans or blowers in new or existing buildings for heating and/or ventilation, and/or air conditioning prior to the completion of the project.)

Effective Period: 7/1/2025 - 6/30/2026
Wage Rate per Hour: $43.68
Supplemental Benefit Rate per Hour: $60.18

Sheet Metal Worker - Duct Cleaner

Effective Period: 7/1/2025 - 6/30/2026
Wage Rate per Hour: $19.84
Supplemental Benefit Rate per Hour: $13.08

Overtime
Time and one half the regular rate after an 8 hour day.
Time and one half the regular rate for Saturday.
Double time the regular rate for Sunday.

Overtime Holidays
Double time the regular rate for work on the following holiday(s).
New Year's Day
Martin Luther King Jr. Day
President's Day
Memorial Day
Independence Day
Labor Day
Columbus Day
Veteran's Day
Thanksgiving Day
Day after Thanksgiving
Christmas Day

Paid Holidays
None

Shift Rates
Work that can only be performed outside regular working hours (eight hours of work between 7:30 A.M. and 3:30 P.M.) - First shift (work between 3:30 P.M. and 11:30 P.M.) - 10% differential above the established hourly rate. Second shift (work between 11:30 P.M. and 7:30 A.M.) - 15% differential above the established hourly rate.

For Fan Maintenance: On all full shifts of fan maintenance work the straight time hourly rate of pay will be paid for each shift, including nights, Saturdays, Sundays, and holidays.

(Local #28)

SHEET METAL WORKER - SPECIALTY
(Decking & Siding)

Sheet Metal Specialty Worker

The first worker to perform this work must be paid at the rate of the Sheet Metal Worker. The second and third workers shall be paid the Specialty Worker Rate. The ratio of One Sheet Metal Worker, then Two Specialty Workers shall be utilized thereafter.

Effective Period: 7/1/2025 - 6/30/2026
Wage Rate per Hour: $50.50
Supplemental Benefit Rate per Hour: $31.26
Supplemental Note: Supplemental benefit contributions are to be made at the applicable overtime rates.

Overtime
Time and one half the regular rate after an 8 hour day.
Time and one half the regular rate for Saturday.
Double time the regular rate for Sunday.

Overtime Holidays
Double time the regular rate for work on the following holiday(s).
New Year's Day
Martin Luther King Jr. Day
President's Day
Memorial Day
Independence Day
Labor Day
Columbus Day
Veteran's Day
Thanksgiving Day
Christmas Day

Paid Holidays
None

(Local #28)

SHIPYARD WORKER

Shipyard Mechanic - First Class

Effective Period: 7/1/2025 - 6/30/2026
Wage Rate per Hour: $32.63
Supplemental Benefit Rate per Hour: $3.40

Shipyard Mechanic - Second Class

Effective Period: 7/1/2025 - 6/30/2026
Wage Rate per Hour: $22.91
Supplemental Benefit Rate per Hour: $2.12

Shipyard Laborer - First Class

Effective Period: 7/1/2025 - 6/30/2026
Wage Rate per Hour: $26.83
Supplemental Benefit Rate per Hour: $3.55

Shipyard Laborer - Second Class

Effective Period: 7/1/2025 - 6/30/2026
Wage Rate per Hour: $19.02
Supplemental Benefit Rate per Hour: $2.68

Shipyard Dockhand - First Class

Effective Period: 7/1/2025 - 6/30/2026
Wage Rate per Hour: $25.76
Supplemental Benefit Rate per Hour: $3.59

Shipyard Dockhand - Second Class

Effective Period: 7/1/2025 - 6/30/2026
Wage Rate per Hour: $20.14
Supplemental Benefit Rate per Hour: $3.34

Overtime Description
Work performed on holiday is paid double time the regular hourly wage rate plus holiday pay.

Overtime
Time and one half the regular rate after an 8 hour day.
Time and one half the regular rate for Saturday.
Double time the regular rate for Sunday.
Time and one half the regular hourly rate after 40 straight time hours in any work week.

Paid Holidays
New Year's Day
Martin Luther King Jr. Day
President's Day
Good Friday
Memorial Day
Independence Day
Labor Day
Thanksgiving Day

Day after Thanksgiving
Christmas Day

Based on Survey Data

SIGN ERECTOR
(Sheet Metal, Plastic, Electric, and Neon)

Sign Erector

Effective Period: 7/1/2025 - 6/30/2026
Wage Rate per Hour: $58.00
Supplemental Benefit Rate per Hour: $63.44

Overtime
Time and one half the regular rate after an 8 hour day.
Time and one half the regular rate for Saturday.
Time and one half the regular rate for Sunday.
Time and one half the regular rate for work on the following holiday(s).

Paid Holidays
New Year's Day
President's Day
Memorial Day
Independence Day
Labor Day
Columbus Day
Election Day
Thanksgiving Day
Day after Thanksgiving
Christmas Day

Shift Rates
Time and one half the regular hourly rate is to be paid for all hours worked outside the regular workday either (7:00 A.M. through 2:30 P.M.) or (8:00 A.M. through 3:30 P.M.)

(Local #137)

STEAMFITTER

Steamfitter

Effective Period: 7/1/2025 - 6/30/2026
Wage Rate per Hour: $61.80
Supplemental Benefit Rate per Hour: $61.89
Supplemental Note: Overtime supplemental benefit rate: $123.04

Steamfitter -Temporary Services

Effective Period: 7/1/2025 - 6/30/2026
Wage Rate per Hour: $46.97
Supplemental Benefit Rate per Hour: $50.22

Overtime Description
Double time after a 7 hour day except for Temporary Services.

Overtime
Double time the regular time rate for Saturday.
Double time the regular rate for Sunday.

Overtime Holidays
Double time the regular rate for work on the following holiday(s).
New Year's Day
President's Day
Memorial Day
Independence Day
Labor Day
Columbus Day
Veteran's Day
Thanksgiving Day
Day after Thanksgiving
Christmas Day

Paid Holidays
None

Shift Rates
May be performed outside of the regular workday except Saturday, Sunday and Holidays. When shift work is performed the wage rate for regular time worked is a 15% percent premium on wage and 15% percent premium on supplemental benefits.

Local 638

STEAMFITTER - REFRIGERATION AND AIR CONDITIONER

(Maintenance and Installation Service Person)

Refrigeration and Air Conditioner Mechanic

Effective Period: 7/1/2025 - 6/30/2026
Wage Rate per Hour: $46.10
Supplemental Benefit Rate per Hour: $21.96

Overtime

Time and one half the regular rate after an 8 hour day.
Time and one half the regular rate for Saturday.
Double time the regular rate for Sunday.

Overtime Holidays

Double time the regular rate for work on the following holiday(s).
New Year's Day
Independence Day
Labor Day
Veteran's Day
Thanksgiving Day
Christmas Day

Double time and one half the regular rate for work on the following holiday(s).
Martin Luther King Jr. Day
President's Day
Memorial Day
Columbus Day

Paid Holidays

New Year's Day
Martin Luther King Jr. Day
President's Day
Memorial Day
Independence Day
Labor Day
Columbus Day
Veteran's Day
Thanksgiving Day
Christmas Day

(Local #638-B)

STONE MASON - SETTER

Stone Mason - Setter

(Assisted by Derrickperson and Rigger)

Effective Period: 7/1/2025 - 6/30/2026
Wage Rate per Hour: $59.47
Supplemental Benefit Rate per Hour: $56.67

Overtime Description
Monday through Friday: Time and one quarter after seven hours worked. Time and one half after eight hours worked. Double time after 9 hours worked.
Saturday: Time and one half for the first nine hours worked. Double time after 9 hours worked.
Sunday and Holiday: double time for all hours worked.
Site Work: (paving and base course) paid at straight time for the first eight hours.

Overtime Holidays
Double time the regular rate for work on the following holiday(s).
New Year's Day
President's Day
Good Friday
Memorial Day
Independence Day
Labor Day
Thanksgiving Day
Christmas Day

Paid Holidays
1/2 day on Christmas Eve if work is performed in the A.M.

Shift Rates
For all hours worked outside 8:00 am to 3:30 pm shall be paid double time unless flex band hours and/or site work are in use.

(Bricklayers District Council)

TAPER

Drywall Taper

Effective Period: 7/1/2025 - 6/30/2026
Wage Rate per Hour: $48.47
Supplemental Benefit Rate per Hour: $35.91

Overtime
Time and one half the regular rate after a 7 hour day.
Time and one half the regular rate for Saturday.
Double time the regular rate for Sunday.

Overtime Holidays
Double time the regular rate for work on the following holiday(s).
New Year's Day
Martin Luther King Jr. Day
President's Day
Good Friday
Memorial Day
Independence Day
Columbus Day
Thanksgiving Day
Day before Christmas
Christmas Day
Day before New Year's Day

Paid Holidays
Labor Day

(Local #1974)

TELECOMMUNICATION WORKER
(Install/maintain/repair telecommunications cables carrying data, video, and/or voice except for installation on building construction/alteration/renovation projects.)

Telecommunication Worker

Effective Period: 7/1/2025 - 6/30/2026
Wage Rate per Hour: $47.03
Supplemental Benefit Rate per Hour: $23.15
Supplemental Note: The above rate applies for Manhattan, Bronx, Brooklyn, Queens. $22.84 for Staten Island only.

Overtime
Time and one half the regular rate after an 8 hour day.

Time and one half the regular rate for Saturday.
Time and one half the regular rate for Sunday.

Overtime Holidays

Time and one half the regular rate for work on the following holiday(s).
New Year's Day
Lincoln's Birthday
Washington's Birthday
Memorial Day
Independence Day
Labor Day
Columbus Day
Election Day
Veteran's Day
Thanksgiving Day
Christmas Day

Paid Holidays

New Year's Day
Lincoln's Birthday
Washington's Birthday
Memorial Day
Independence Day
Labor Day
Columbus Day
Election Day
Veteran's Day
Thanksgiving Day
Christmas Day
Employees have the option of observing either Martin Luther King's Birthday or the day after Thanksgiving instead of Lincoln's Birthday

Shift Rates

For any workday that starts before 8A.M. or ends after 6P.M. there is a 10% differential for the applicable worker's hourly rate.

Vacation

After 6 months.....one week.
After 12 months but less than 7 years.....two weeks.
After 7 or more but less than 15 years.....three weeks.
After 15 years or more but less than 25 years.....four weeks.

(C.W.A.)

TILE FINISHER

Tile Finisher

Effective Period: 7/1/2025 - 6/30/2026
Wage Rate per Hour: $50.11
Supplemental Benefit Rate per Hour: $33.61

Overtime
Time and one half the regular rate after an 8 hour day.
Time and one half the regular rate for Saturday.
Double time the regular rate for Sunday.

Overtime Holidays
Double time the regular rate for work on the following holiday(s).
New Year's Day
Martin Luther King Jr. Day
President's Day
Good Friday
Memorial Day
Independence Day
Labor Day
Columbus Day
Veteran's Day
Thanksgiving Day
Day after Thanksgiving
Christmas Day

Paid Holidays
None

Shift Rates
Off shift work day (work performed outside the regular 8:00 A.M. to 3:30 P.M. workday): shift differential of one and one quarter (1¼) times the regular straight time rate of pay for the seven hours of actual off-shift work.

(Local #7)

TILE LAYER - SETTER

Tile Layer - Setter

Effective Period: 7/1/2025 - 6/30/2026
Wage Rate per Hour: $65.03
Supplemental Benefit Rate per Hour: $37.11

Overtime
Time and one half the regular rate after an 8 hour day.

Time and one half the regular rate for Saturday.
Double time the regular rate for Sunday.

Overtime Holidays

Double time the regular rate for work on the following holiday(s).
New Year's Day
Martin Luther King Jr. Day
President's Day
Good Friday
Memorial Day
Independence Day
Labor Day
Columbus Day
Veteran's Day
Thanksgiving Day
Day after Thanksgiving
Christmas Day

Shift Rates

Off shift work day (work performed outside the regular 8:00 A.M. to 3:30 P.M. workday): shift differential of one and one quarter (1¼) times the regular straight time rate of pay for the seven hours of actual off-shift work.

(Local #7)

TIMBERPERSON

Timberperson

Effective Period: 7/1/2025 - 6/30/2026
Wage Rate per Hour: $56.59
Supplemental Benefit Rate per Hour: $56.41

Overtime

Time and one half the regular rate after an 8 hour day.
Time and one half the regular rate for Saturday.
Double time the regular rate for Sunday.
Saturday may be used as a make-up day at straight time when a day is lost during that week to inclement weather.

Overtime Holidays

Double time the regular rate for work on the following holiday(s).
New Year's Day
President's Day
Memorial Day
Independence Day
Labor Day

Columbus Day
Presidential Election Day
Thanksgiving Day
Christmas Day

Paid Holidays

None

Shift Rates

Off shift work commencing between 5:00 P.M. and 11:00 P.M. shall work eight and one half hours allowing for one half hour for lunch. The wage rate shall be 113% of the straight time hourly wage rate. Benefits for off-shift work shall be paid at the straight time rate.

(Local #1556)

TUNNEL WORKER

Blasters, Mucking Machine Operators (Compressed Air Rates)

Effective Period: 7/1/2025 - 6/30/2026
Wage Rate per Hour: $75.14
Supplemental Benefit Rate per Hour: $66.51

Tunnel Workers (Compressed Air Rates)

Effective Period: 7/1/2025 - 6/30/2026
Wage Rate per Hour: $72.46
Supplemental Benefit Rate per Hour: $64.41

Top Nipper (Compressed Air Rates)

Effective Period: 7/1/2025 - 6/30/2026
Wage Rate per Hour: $71.24
Supplemental Benefit Rate per Hour: $63.14

Outside Lock Tender, Outside Gauge Tender,Muck Lock Tender (Compressed Air Rates)

Effective Period: 7/1/2025 - 6/30/2026
Wage Rate per Hour: $69.83
Supplemental Benefit Rate per Hour: $62.11

Bottom Bell & Top Bell Signal Person: Shaft Person (Compressed Air Rates)

Effective Period: 7/1/2025 - 6/30/2026
Wage Rate per Hour: $69.83
Supplemental Benefit Rate per Hour: $62.11

Changehouse Attendant: Powder Watchperson (Compressed Air Rates)

Effective Period: 7/1/2025 - 6/30/2026
Wage Rate per Hour: $61.57
Supplemental Benefit Rate per Hour: $58.18

Blasters (Free Air Rates)

Effective Period: 7/1/2025 - 6/30/2026
Wage Rate per Hour: $71.69
Supplemental Benefit Rate per Hour: $63.84

Tunnel Workers (Free Air Rates)

Effective Period: 7/1/2025 - 6/30/2026
Wage Rate per Hour: $68.58
Supplemental Benefit Rate per Hour: $61.18

All Others (Free Air Rates)

Effective Period: 7/1/2025 - 6/30/2026
Wage Rate per Hour: $63.40
Supplemental Benefit Rate per Hour: $56.62

Microtunneling (Free Air Rates)

Effective Period: 7/1/2025 - 6/30/2026
Wage Rate per Hour: $54.86
Supplemental Benefit Rate per Hour: $48.95

Overtime Description

For work performed during excavation and primary concrete tunnel lining phases - Double time the regular rate after an 8 hour day and Saturday, Sunday and on the following holiday(s) listed below.
For Repair-Maintenance Work on Existing Equipment and Facilities - Time and one half the regular rate after a 8 hour day, Saturday, Sunday and double time the regular rate for work on the following holiday(s) listed below.
For Small-Bore Micro Tunneling Machines - Time and one-half the regular rate shall be paid for all overtime.
For work not listed above - Time and one half the regular rate after an 8 hour day and Saturday and double time the regular rate on Sunday and on the following holiday(s) listed below.

Paid Holidays

New Year's Day
Martin Luther King Jr. Day

President's Day
Memorial Day
Independence Day
Labor Day
Columbus Day
Veteran's Day
Thanksgiving Day
Day after Thanksgiving
Christmas Day

(Local #147)

UTILITY LOCATOR

(Locate & mark underground utilities including gas for street excavation and utility line repairs)

Utility Locator (Year 7 and above)

Effective Period: 7/1/2025 - 6/30/2026
Wage Rate per Hour: $35.50
Supplemental Benefit Rate per Hour: $1.43

Utility Locator (Year 5 Second 6 months & Year 6)

Effective Period: 7/1/2025 - 6/30/2026
Wage Rate per Hour: $35.50
Supplemental Benefit Rate per Hour: $1.43

Utility Locator (Year 5 first 6 months)

Effective Period: 7/1/2025 - 6/30/2026
Wage Rate per Hour: $34.80
Supplemental Benefit Rate per Hour: $1.43

Utility Locator (Year 4)

Effective Period: 7/1/2025 - 6/30/2026
Wage Rate per Hour: $31.54
Supplemental Benefit Rate per Hour: $1.43

Utility Locator (Year 3)

Effective Period: 7/1/2025 - 6/30/2026
Wage Rate per Hour: $28.28
Supplemental Benefit Rate per Hour: $1.43

Utility Locator (Year 2)

Effective Period: 7/1/2025 - 6/30/2026
Wage Rate per Hour: $25.02
Supplemental Benefit Rate per Hour: $1.43

Utility Locator (Year 1)

Effective Period: 7/1/2025 - 6/30/2026
Wage Rate per Hour: $21.76
Supplemental Benefit Rate per Hour: $1.43

Utility Locator (Up to 1 year)

Effective Period: 7/1/2025 - 6/30/2026
Wage Rate per Hour: $18.50
Supplemental Benefit Rate per Hour: $1.43
Supplemental Note: No benefits for the first 90 days of employment.

Overtime

Time and one half the regular rate for work on the following holiday(s).
Time and one half the regular hourly rate after 40 straight time hours in any work week.

Paid Holidays

New Year's Day
Memorial Day
Independence Day
Thanksgiving Day
Christmas Day

Shift Rates

10% shift differential to employees working any shift starting between noon and 5 AM.

Vacation

For up to 1 year	0 hours
For year 1 - 2	48 hours per year
For year 3 - 9	96 hours per year
For year 10 or more	144 hours per year

Sick Days:
For up to 1 year employee receives 40 hours paid sick leave.
For year 1 employee earns 2 hours of paid sick leave for every 100 overtime hours worked.
For year 2 - 9 years employee earns 4 hours of paid sick leave for every 100 overtime hours worked.
For year 10 or more employee earns 6 hours of paid sick leave for every 100 overtime hours worked.

WELDER

WELDER AND FIREWATCH TO BE PAID AT THE RATE OF THE JOURNEYPERSON OR REGISTERED APPRENTICE IN THE TRADE PERFORMING THE WORK.

OFFICE OF THE COMPTROLLER

CITY OF NEW YORK

CONSTRUCTION APPRENTICE PREVAILING WAGE SCHEDULE

Pursuant to Labor Law § 220 (3-e), only apprentices who are individually registered in a bona fide program to which the employer contractor is a participant and registered with the New York State Department of Labor, may be paid at the apprentice rates in this schedule. Apprentices who are not so registered must be paid as journey persons in accordance with the trade classification of the work they actually performed.

Apprentice ratios are established to ensure the proper safety, training and supervision of apprentices. A ratio establishes the number of journey workers required for each apprentice in a program and on a job site. Ratios are interpreted as follows: in the case of a 1:1, 1:4 ratio, there must be one journey worker for the first apprentice, and four additional journey workers for each subsequent apprentice.

TABLE OF CONTENTS

CLASSIFICATION	PAGE
BOILERMAKER	4
BRICKLAYER	5
CARPENTER	6
CARPENTER - HIGH RISE CONCRETE FORMS	7
CEMENT AND CONCRETE WORKER	7
CEMENT MASON	8
DERRICKPERSON & RIGGER (STONE)	9
DOCKBUILDER/PILE DRIVER	9
ELECTRICIAN	10
ELEVATOR CONSTRUCTOR	12
ELEVATOR REPAIR & MAINTENANCE	13
ENGINEER	14
ENGINEER - OPERATING	15
FLOOR COVERER	15
GLAZIER	16
HAZARDOUS MATERIAL HANDLER	17
HEAT & FROST INSULATOR	17
HOUSE WRECKER	18
IRON WORKER - ORNAMENTAL	19
IRON WORKER - STRUCTURAL	20
LABORER - HEAVY & HIGHWAY	20
LABORER - PAVER & ROADBUILDER	21
LABORER - PAVER AND ROADBUILDER - LINE STRIPING (ROADWAY)	22
MARBLE MECHANICS	22

MASON TENDER....24
MASON TENDER (INTERIOR DEMOLITION WORKER)....24
METALLIC LATHER....25
MILLWRIGHT....26
PAINTER....27
PAINTER - BRIDGE & STRUCTURAL STEEL....27
PAINTER - METAL POLISHER....28
PLASTERER....29
PLASTERER - TENDER....29
PLUMBER....30
POINTER, WATERPROOFER, CAULKER, SANDBLASTER, STEAMBLASTER....31
ROOFER....32
SHEET METAL WORKER....33
SIGN ERECTOR....34
STEAMFITTER....36
STEAMFITTER - REFRIGERATION & AIR CONDITIONER....37
STONE MASON - SETTER....37
TAPER....38
TILE LAYER - SETTER....39
TIMBERPERSON....40

BOILERMAKER

(Ratio of Apprentice to Journeyperson: 1 to 1, 1 to 3)

Boilermaker (First Year)

Effective Period: 7/1/2025 - 6/30/2026
Wage Rate Per Hour: 65% of Journeyperson's rate
Supplemental Benefit Rate Per Hour: $35.27

Boilermaker (Second Year: 1st Six Months)

Effective Period: 7/1/2025 - 6/30/2026
Wage Rate Per Hour: 70% of Journeyperson's rate
Supplemental Benefit Rate Per Hour: $37.34

Boilermaker (Second Year: 2nd Six Months)

Effective Period: 7/1/2025 - 6/30/2026
Wage Rate Per Hour: 75% of Journeyperson's rate
Supplemental Benefit Rate Per Hour: $39.44

Boilermaker (Third Year: 1st Six Months)

Effective Period: 7/1/2025 - 6/30/2026
Wage Rate Per Hour: 80% of Journeyperson's rate
Supplemental Benefit Rate Per Hour: $41.50

Boilermaker (Third Year: 2nd Six Months)

Effective Period: 7/1/2025 - 6/30/2026
Wage Rate Per Hour: 85% of Journeyperson's rate
Supplemental Benefit Rate Per Hour: $43.59

Boilermaker (Fourth Year: 1st Six Months)

Effective Period: 7/1/2025 - 6/30/2026
Wage Rate Per Hour: 90% of Journeyperson's rate
Supplemental Benefit Rate Per Hour: $45.68

Boilermaker (Fourth Year: 2nd Six Months)

Effective Period: 7/1/2025 - 6/30/2026
Wage Rate Per Hour: 95% of Journeyperson's rate
Supplemental Benefit Rate Per Hour: $47.76

(Local #5)

BRICKLAYER

(Ratio of Apprentice to Journeyperson: 1 to 1, 1 to 4)

Bricklayer (First 650 Hours)

Effective Period: 7/1/2025 - 6/30/2026
Wage Rate Per Hour: 40% of Journeyperson's rate
Supplemental Benefit Rate Per Hour: $29.65

Bricklayer (Second 650 Hours)

Effective Period: 7/1/2025 - 6/30/2026
Wage Rate Per Hour: 50% of Journeyperson's rate
Supplemental Benefit Rate Per Hour: $29.65

Bricklayer (Third 650 Hours)

Effective Period: 7/1/2025 - 6/30/2026
Wage Rate Per Hour: 60% of Journeyperson's rate
Supplemental Benefit Rate Per Hour: $29.65

Bricklayer (Fourth 650 Hours)

Effective Period: 7/1/2025 - 6/30/2026
Wage Rate Per Hour: 70% of Journeyperson's rate
Supplemental Benefit Rate Per Hour: $29.65

Bricklayer (Fifth 650 Hours)

Effective Period: 7/1/2025 - 6/30/2026
Wage Rate Per Hour: 80% of Journeyperson's rate
Supplemental Benefit Rate Per Hour: $29.65

Bricklayer (Last 750 Hours)

Effective Period: 7/1/2025 - 6/30/2026
Wage Rate Per Hour: 90% of Journeyperson's rate
Supplemental Benefit Rate Per Hour: $29.65

(Bricklayer District Council)

CARPENTER

(Ratio of Apprentice to Journeyperson: 1 to 1, 1 to 4)

Carpenter (First Year)

Effective Period: 7/1/2025 - 6/30/2026
Wage Rate Per Hour For Building Apprentice: $24.20
Supplemental Benefit Rate Per Hour For Building Apprentice: $18.45

Wage Rate Per Hour For Heavy Apprentice: $27.98
Supplemental Benefit Rate Per Hour For Heavy Apprentice: $38.89

Carpenter (Second Year)

Effective Period: 7/1/2025 - 6/30/2026
Wage Rate Per Hour For Building Apprentice: $27.20
Supplemental Benefit Rate Per Hour For Building Apprentice: $19.95

Wage Rate Per Hour For Heavy Apprentice: $33.58
Supplemental Benefit Rate Per Hour For Heavy Apprentice: $38.89

Carpenter (Third Year)

Effective Period: 7/1/2025 - 6/30/2026
Wage Rate Per Hour For Building Apprentice: $31.45
Supplemental Benefit Rate Per Hour For Building Apprentice: $23.55

Wage Rate Per Hour For Heavy Apprentice: $41.96
Supplemental Benefit Rate Per Hour For Heavy Apprentice: $38.89

Carpenter (Fourth Year)

Effective Period: 7/1/2025 - 6/30/2026
Wage Rate Per Hour For Building Apprentice: $39.33
Supplemental Benefit Rate Per Hour For Building Apprentice: $25.55

Wage Rate Per Hour For Heavy Apprentice: $50.35
Supplemental Benefit Rate Per Hour For Heavy Apprentice: $38.89

(Carpenters District Council)

CARPENTER - HIGH RISE CONCRETE FORMS

(Ratio of Apprentice to Journeyperson: 1 to 1, 2 to 5)

Carpenter - High Rise (First Year)

Effective Period: 7/1/2025 - 6/30/2026
Wage Rate per Hour: $18.27
Supplemental Benefit Rate per Hour: $17.55

Carpenter - High Rise (Second Year)

Effective Period: 7/1/2025 - 6/30/2026
Wage Rate per Hour: $24.70
Supplemental Benefit Rate per Hour: $17.68

Carpenter - High Rise (Third Year)

Effective Period: 7/1/2025 - 6/30/2026
Wage Rate per Hour: $31.28
Supplemental Benefit Rate per Hour: $17.81

Carpenter - High Rise (Fourth Year)

Effective Period: 7/1/2025 - 6/30/2026
Wage Rate per Hour: $38.90
Supplemental Benefit Rate per Hour: $17.96

(Carpenters District Council)

CEMENT AND CONCRETE WORKER

(Ratio of Apprentice to Journeyperson: 1 to 1, 1 to 3)

Cement & Concrete Worker (First 1333 hours)

Effective Period: 7/1/2025 - 6/30/2026
Wage Rate Per Hour: 53% of Journeyperson's rate
Supplemental Benefit Rate Per Hour: $17.97

Cement & Concrete Worker (Second 1333 hours)

Effective Period: 7/1/2025 - 6/30/2026
Wage Rate Per Hour: 69% of Journeyperson's rate
Supplemental Benefit Rate Per Hour: $23.41

Cement & Concrete Worker (Last 1334 hours)

Effective Period: 7/1/2025 - 6/30/2026
Wage Rate Per Hour: 85% of Journeyperson's rate
Supplemental Benefit Rate Per Hour: $24.85

(Cement Concrete Workers District Council)

CEMENT MASON

(Ratio of Apprentice to Journeyperson: 1 to 1, 1 to 4)

Cement Mason (First Year)

Effective Period: 7/1/2025 - 6/30/2026
Wage Rate per Hour: $23.77
Supplemental Benefit Rate per Hour: $14.86

Cement Mason (Second Year)

Effective Period: 7/1/2025 - 6/30/2026
Wage Rate per Hour: $28.74
Supplemental Benefit Rate per Hour: $15.16

Cement Mason (Third Year)

Effective Period: 7/1/2025 - 6/30/2026
Wage Rate per Hour: $34.27
Supplemental Benefit Rate per Hour: $15.27

(Local #780)

DERRICKPERSON & RIGGER (STONE)

(Ratio of Apprentice to Journeyperson: 1 to 1, 1 to 4)

Derrickperson & Rigger (stone) - First Year

Effective Period: 7/1/2025 - 6/30/2026
Wage Rate Per Hour: 50% of Journeyperson's rate
Supplemental Benefit Rate Per Hour: 50% of Journeyperson's rate

Derrickperson & Rigger (stone) - Second Year: 1st Six Months

Effective Period: 7/1/2025 - 6/30/2026
Wage Rate Per Hour: 70% of Journeyperson's rate
Supplemental Benefit Rate Per Hour: 75% of Journeyperson's rate

Derrickperson & Rigger (stone) - Second Year: 2nd Six Months

Effective Period: 7/1/2025 - 6/30/2026
Wage Rate Per Hour: 80% of Journeyperson's rate
Supplemental Benefit Rate Per Hour: 75% of Journeyperson's rate

Derrickperson & Rigger (stone) - Third Year

Effective Period: 7/1/2025 - 6/30/2026
Wage Rate Per Hour: 90% of Journeyperson's rate
Supplemental Benefit Rate Per Hour: 75% of Journeyperson's rate

(Local #197)

DOCKBUILDER/PILE DRIVER

(Ratio of Apprentice to Journeyperson: 1 to 1, 1 to 6)

Dockbuilder/Pile Driver (First Year)

Effective Period: 7/1/2025 - 6/30/2026
Wage Rate Per Hour: $27.98
Supplemental Benefit Rate Per Hour: $38.89

Dockbuilder/Pile Driver (Second Year)

Effective Period: 7/1/2025 - 6/30/2026
Wage Rate Per Hour: $33.58
Supplemental Benefit Rate Per Hour: $38.89

Dockbuilder/Pile Driver (Third Year)

Effective Period: 7/1/2025 - 6/30/2026
Wage Rate Per Hour: $41.96
Supplemental Benefit Rate Per Hour: $38.89

Dockbuilder/Pile Driver (Fourth Year)

Effective Period: 7/1/2025 - 6/30/2026
Wage Rate Per Hour: $50.35
Supplemental Benefit Rate Per Hour: $38.89

(Carpenters District Council)

ELECTRICIAN
(Ratio of Apprentice to Journeyperson: 1 to 1, 1 to 3)

Electrician 1st year

Effective Period: 7/1/2025 - 4/15/2026
Wage Rate per Hour: $18.50
Supplemental Benefit Rate per Hour: $18.94
Overtime Supplemental Rate Per Hour: $20.17

Effective Period: 4/16/2026 - 6/30/2026
Wage Rate per Hour: $19.25
Supplemental Benefit Rate per Hour: $19.84
Overtime Supplemental Rate Per Hour: $21.11

Electrician 2nd Year

Effective Period: 7/1/2025 - 4/15/2026
Wage Rate per Hour: $20.50
Supplemental Benefit Rate per Hour: $19.99
Overtime Supplemental Rate Per Hour: $21.35

Effective Period: 4/16/2026 - 6/30/2026

Wage Rate per Hour: $21.25
Supplemental Benefit Rate per Hour: $20.88
Overtime Supplemental Rate Per Hour: $22.29

Electrician 3rd Year

Effective Period: 7/1/2025 - 4/15/2026
Wage Rate per Hour: $22.50
Supplemental Benefit Rate per Hour: $21.04
Overtime Supplemental Rate Per Hour: $22.53

Effective Period: 4/16/2026 - 6/30/2026
Wage Rate per Hour: $23.25
Supplemental Benefit Rate per Hour: $21.93
Overtime Supplemental Rate Per Hour: $23.48

Electrician 4th Year

Effective Period: 7/1/2025 - 4/15/2026
Wage Rate per Hour: $25.50
Supplemental Benefit Rate per Hour: $22.61
Overtime Supplemental Rate Per Hour: $24.30

Effective Period: 4/16/2026 - 6/30/2026
Wage Rate per Hour: $26.25
Supplemental Benefit Rate per Hour: $23.50
Overtime Supplemental Rate Per Hour: $25.25

Electrician 5th Term (0-12 Months)

MIJ 1

Effective Period: 7/1/2025 - 4/15/2026
Wage Rate per Hour: $27.50
Supplemental Benefit Rate per Hour: $26.29
Overtime Supplemental Rate Per Hour: $28.02

Effective Period: 4/16/2026 - 6/30/2026
Wage Rate per Hour: $27.50
Supplemental Benefit Rate per Hour: $26.79
Overtime Supplemental Rate Per Hour: $28.52

Electrician 5th Term (13-18 Months)

MIJ 2

Effective Period: 7/1/2025 - 4/15/2026
Wage Rate per Hour: $33.50

Supplemental Benefit Rate per Hour: $29.51
Overtime Supplemental Rate Per Hour: $31.63

Effective Period: 4/16/2026 - 6/30/2026
Wage Rate per Hour: $33.50
Supplemental Benefit Rate per Hour: $30.01
Overtime Supplemental Rate Per Hour: $32.13

Overtime Description

Overtime Wage paid at time and one half the regular rate

(Local #3)

ELEVATOR CONSTRUCTOR

(Ratio of Apprentice to Journeyperson: 1 to 1, 1 to 2)

Elevator (Constructor) - First Year

Effective Period: 7/1/2025 - 3/16/2026
Wage Rate Per Hour: 50% of Journeyperson's rate
Supplemental Rate Per Hour: $35.48

Effective Period: 3/17/2026 - 6/30/2026
Wage Rate Per Hour: 50% of Journeyperson's rate
Supplemental Rate Per Hour: $36.18

Elevator (Constructor) - Second Year

Effective Period: 7/1/2025 - 3/16/2026
Wage Rate Per Hour: 55% of Journeyperson's rate
Supplemental Rate Per Hour: $36.16

Effective Period: 3/17/2026 - 6/30/2026
Wage Rate Per Hour: 55% of Journeyperson's rate
Supplemental Rate Per Hour: $36.90

Elevator (Constructor) - Third Year

Effective Period: 7/1/2025 - 3/16/2026
Wage Rate Per Hour: 65% of Journeyperson's rate
Supplemental Rate Per Hour: $37.53

Effective Period: 3/17/2026 - 6/30/2026

Wage Rate Per Hour: 65% of Journeyperson's rate
Supplemental Rate Per Hour: $38.35

Elevator (Constructor) - Fourth Year

Effective Period: 7/1/2025 - 3/16/2026
Wage Rate Per Hour: 75% of Journeyperson's rate
Supplemental Rate Per Hour: $38.90

Effective Period: 3/17/2026 - 6/30/2026
Wage Rate Per Hour: 75% of Journeyperson's rate
Supplemental Rate Per Hour: $39.80

(Local #1)

ELEVATOR REPAIR & MAINTENANCE

(Ratio of Apprentice to Journeyperson: 1 to 1, 1 to 2)

Elevator Service/Modernization Mechanic (First Year)

Effective Period: 7/1/2025 - 3/16/2026
Wage Rate Per Hour: 50% of Journeyperson's rate
Supplemental Benefit Per Hour: $35.45

Effective Period: 3/17/2026 - 6/30/2026
Wage Rate Per Hour: 50% of Journeyperson's rate
Supplemental Benefit Per Hour: $36.15

Elevator Service/Modernization Mechanic (Second Year)

Effective Period: 7/1/2025 - 3/16/2026
Wage Rate Per Hour: 55% of Journeyperson's rate
Supplemental Benefit Per Hour: $36.13

Effective Period: 3/17/2026 - 6/30/2026
Wage Rate Per Hour: 55% of Journeyperson's rate
Supplemental Benefit Per Hour: $36.87

Elevator Service/Modernization Mechanic (Third Year)

Effective Period: 7/1/2025 - 3/16/2026
Wage Rate Per Hour: 65% of Journeyperson's rate
Supplemental Benefit Per Hour: $37.50

Effective Period: 3/17/2026 - 6/30/2026
Wage Rate Per Hour: 65% of Journeyperson's rate
Supplemental Benefit Per Hour: $38.32

Elevator Service/Modernization Mechanic (Fourth Year)

Effective Period: 7/1/2025 - 3/16/2026
Wage Rate Per Hour: 75% of Journeyperson's rate
Supplemental Benefit Per Hour: $38.86

Effective Period: 3/17/2026 - 6/30/2026
Wage Rate Per Hour: 75% of Journeyperson's rate
Supplemental Benefit Per Hour: $39.76

(Local #1)

ENGINEER

(Ratio of Apprentice to Journeyperson: 1 to 1, 1 to 5)

Engineer - First Year

Effective Period: 7/1/2025 - 6/30/2026
Wage Rate per Hour: $28.68
Supplemental Benefit Rate per Hour: $35.26

Engineer - Second Year

Effective Period: 7/1/2025 - 6/30/2026
Wage Rate per Hour: $35.85
Supplemental Benefit Rate per Hour: $35.26

Engineer - Third Year

Effective Period: 7/1/2025 - 6/30/2026
Wage Rate per Hour: $39.44
Supplemental Benefit Rate per Hour: $35.26

Engineer - Fourth Year

Effective Period: 7/1/2025 - 6/30/2026
Wage Rate per Hour: $43.02
Supplemental Benefit Rate per Hour: $35.26

(Local #15)

ENGINEER - OPERATING

(Ratio of Apprentice to Journeyperson: 1 to 1, 1 to 5)

Operating Engineer - First Year

Effective Period: 7/1/2025 - 6/30/2026
Wage Rate Per Hour: 40% of Operating Engineer - Road & Heavy Construction V's Rate
Supplemental Benefit Per Hour: $28.40

Operating Engineer - Second Year

Effective Period: 7/1/2025 - 6/30/2026
Wage Rate Per Hour: 50% of Operating Engineer - Road & Heavy Construction V's Rate
Supplemental Benefit Per Hour: $28.40

Operating Engineer - Third Year

Effective Period: 7/1/2025 - 6/30/2026
Wage Rate Per Hour: 60% of Operating Engineer - Road & Heavy Construction V's Rate
Supplemental Benefit Per Hour: $28.40

(Local #14)

FLOOR COVERER

(Ratio of Apprentice to Journeyperson: 1 to 1, 1 to 4)

Floor Coverer (First Year)

Effective Period: 7/1/2025 - 6/30/2026
Wage Rate per Hour: $26.54
Supplemental Benefit Rate per Hour: $18.04

Floor Coverer (Second Year)

Effective Period: 7/1/2025 - 6/30/2026
Wage Rate per Hour: $29.60
Supplemental Benefit Rate per Hour: $19.69

Floor Coverer (Third Year)

Effective Period: 7/1/2025 - 6/30/2026
Wage Rate per Hour: $34.05
Supplemental Benefit Rate per Hour: $23.49

Floor Coverer (Fourth Year)

Effective Period: 7/1/2025 - 6/30/2026
Wage Rate per Hour: $42.40
Supplemental Benefit Rate per Hour: $25.49

(Carpenters District Council)

GLAZIER
(Ratio of Apprentice to Journeyperson: 1 to 1, 1 to 3)

Glazier (First Year)

Effective Period: 7/1/2025 - 6/30/2026
Wage and Supplemental Rate Per Hour: 40% of Journeyperson's rate

Glazier (Second Year)

Effective Period: 7/1/2025 - 6/30/2026
Wage and Supplemental Rate Per Hour: 50% of Journeyperson's rate

Glazier (Third Year)

Effective Period: 7/1/2025 - 6/30/2026
Wage and Supplemental Rate Per Hour: 60% of Journeyperson's rate

Glazier (Fourth Year)

Effective Period: 7/1/2025 - 6/30/2026

Wage and Supplemental Rate Per Hour: 80% of Journeyperson's rate

(Local #1281)

HAZARDOUS MATERIAL HANDLER
(Ratio of Apprentice Journeyperson: 1 to 1, 1 to 3)

Handler (First 1000 Hours)

Effective Period: 7/1/2025 - 6/30/2026
Wage Rate per Hour: $20.76
Supplemental Benefit Rate per Hour: $17.04

Handler (Second 1000 Hours)

Effective Period: 7/1/2025 - 6/30/2026
Wage Rate per Hour: $21.76
Supplemental Benefit Rate per Hour: $17.04

Handler (Third 1000 Hours)

Effective Period: 7/1/2025 - 6/30/2026
Wage Rate per Hour: $24.76
Supplemental Benefit Rate per Hour: $17.04

Handler (Fourth 1000 Hours)

Effective Period: 7/1/2025 - 6/30/2026
Wage Rate per Hour: $26.76
Supplemental Benefit Rate per Hour: $17.04

(Local #78)

HEAT & FROST INSULATOR
(Ratio of Apprentice to Journeyperson: 1 to 1, 1 to 3)

Heat & Frost Insulator (First Year)

Effective Period: 7/1/2025 - 6/30/2026
Wage and Supplemental Rate Per Hour: 45% of Journeyperson's rate

Heat & Frost Insulator (Second Year)

Effective Period: 7/1/2025 - 6/30/2026
Wage and Supplemental Rate Per Hour: 55% of Journeyperson's rate

Heat & Frost Insulator (Third Year)

Effective Period: 7/1/2025 - 6/30/2026
Wage and Supplemental Rate Per Hour: 65% of Journeyperson's rate

Heat & Frost Insulator (Fourth Year)

Effective Period: 7/1/2025 - 6/30/2026
Wage and Supplemental Rate Per Hour: 75% of Journeyperson's rate

(Local #12)

HOUSE WRECKER
(TOTAL DEMOLITION)
(Ratio of Apprentice to Journeyperson: 1 to 1, 1 to 3)

House Wrecker - First Year

Effective Period: 7/1/2025 - 6/30/2026
Wage Rate per Hour: $21.75
Supplemental Benefit Rate per Hour: $12.12

House Wrecker - Second Year

Effective Period: 7/1/2025 - 6/30/2026
Wage Rate per Hour: $23.50
Supplemental Benefit Rate per Hour: $12.12

House Wrecker - Third Year

Effective Period: 7/1/2025 - 6/30/2026
Wage Rate per Hour: $25.00
Supplemental Benefit Rate per Hour: $12.12

House Wrecker - Fourth Year

Effective Period: 7/1/2025 - 6/30/2026
Wage Rate per Hour: $27.50
Supplemental Benefit Rate per Hour: $12.12

(Mason Tenders District Council)

IRON WORKER - ORNAMENTAL

(Ratio of Apprentice to Journeyperson: 1 to 1, 1 to 4)

Iron Worker (Ornamental) - First Year

Effective Period: 7/1/2025 - 6/30/2026
Wage Rate per Hour: $25.98
Supplemental Benefit Rate per Hour: $15.99

Iron Worker (Ornamental) - Second Year

Effective Period: 7/1/2025 - 6/30/2026
Wage Rate per Hour: $28.45
Supplemental Benefit Rate per Hour: $17.99

Iron Worker (Ornamental) - Third Year

Effective Period: 7/1/2025 - 6/30/2026
Wage Rate per Hour: $30.80
Supplemental Benefit Rate per Hour: $18.99

Iron Worker (Ornamental) - Fourth Year

Effective Period: 7/1/2025 - 6/30/2026
Wage Rate per Hour: $34.39
Supplemental Benefit Rate per Hour: $20.99

(Local #580)

IRON WORKER - STRUCTURAL

(Ratio of Apprentice to Journeyperson: 1 to 1, 1 to 6)

Iron Worker (Structural) - 1st Six Months

Effective Period: 7/1/2025 - 6/30/2026
Wage Rate per Hour: $30.61
Supplemental Benefit Rate per Hour: $63.80

Iron Worker (Structural) - 7- 18 Months

Effective Period: 7/1/2025 - 6/30/2026
Wage Rate per Hour: $31.21
Supplemental Benefit Rate per Hour: $63.80

Iron Worker (Structural) - 19 - 36 months

Effective Period: 7/1/2025 - 6/30/2026
Wage Rate per Hour: $31.82
Supplemental Benefit Rate per Hour: $63.80

(Local #40 and #361)

LABORER - HEAVY & HIGHWAY

(Ratio Apprentice to Journeyperson: 1 to 1, 1 to 3)

Laborer - Heavy & Highway - First 1000 hours

Effective Period: 7/1/2025 - 6/30/2026
Wage Rate Per Hour: 50% of Journeyperson's rate
Supplemental Rate Per Hour: $55.73

Laborer - Heavy & Highway - Second 1000 hours

Effective Period: 7/1/2025 - 6/30/2026

Wage Rate Per Hour: 60% of Journeyperson's rate
Supplemental Rate Per Hour: 55.73

Laborer - Heavy & Highway - Third 1000 hours

Effective Period: 7/1/2025 - 6/30/2026
Wage Rate Per Hour: 75% of Journeyperson's rate
Supplemental Rate Per Hour: 55.73

Laborer - Heavy & Highway - Fourth 1000 hours

Effective Period: 7/1/2025 - 6/30/2026
Wage Rate Per Hour: 90% of Journeyperson's rate
Supplemental Rate Per Hour: $55.73

(Local #731)

LABORER - PAVER & ROADBUILDER

(Ratio of Apprentice to Journeyperson: 1 to 1, 1 to 3)

Paver and Roadbuilder - First Year (Minimum 1000 hours)

Effective Period: 7/1/2025 - 6/30/2026
Wage Rate per Hour: $32.21
Supplemental Benefit Rate per Hour: $27.82

Paver and Roadbuilder - Second Year (Minimum 1000 hours)

Effective Period: 7/1/2025 - 6/30/2026
Wage Rate per Hour: $33.85
Supplemental Benefit Rate per Hour: $27.82

(Local#1010)

LABORER - PAVER AND ROADBUILDER - LINE STRIPING (ROADWAY)

(Ratio of Apprentice to Journeyperson: 1 to 1, 1 to 3)

Paver and Roadbuilder - Line Striping (Roadway) - First Year (Minimum 1000 hours)

Effective Period: 7/1/2025 - 6/30/2026
Wage Rate per Hour: $31.36
Supplemental Benefit Rate per Hour: $19.27

Paver and Roadbuilder - Line Striping (Roadway) - Second Year (Minimum 1000 hours)

Effective Period: 7/1/2025 - 6/30/2026
Wage Rate per Hour: $33.00
Supplemental Benefit Rate per Hour: $19.27

(Local #1010)

MARBLE MECHANICS

(Ratio of Apprentice to Journeyperson: 1 to 1, 1 to 4)

Cutters & Setters - 0-3000 Hours

Effective Period: 7/1/2025 - 6/30/2026
Wage and Supplemental Rate Per Hour: 40% of Journeyperson's rate

NO BENEFITS PAID DURING THE FIRST TWO MONTHS (PROBATIONARY PERIOD)

Cutters & Setters - 3001-3750 Hours

Effective Period: 7/1/2025 - 6/30/2026
Wage and Supplemental Rate Per Hour: 60% of Journeyperson's rate

Cutters & Setters - 3751-4500 Hours

Effective Period: 7/1/2025 - 6/30/2026

Wage and Supplemental Rate Per Hour: 65% of Journeyperson's rate

Cutters & Setters - 4501-5250 Hours

Effective Period: 7/1/2025 - 6/30/2026
Wage and Supplemental Rate Per Hour: 70% of Journeyperson's rate

Cutters & Setters - 5251-6000 Hours

Effective Period: 7/1/2025 - 6/30/2026
Wage and Supplemental Rate Per Hour: 75% of Journeyperson's rate

Cutters & Setters - 6001-7500 Hours

Effective Period: 7/1/2025 - 6/30/2026
Wage and Supplemental Rate Per Hour: 85% of Journeyperson's rate

Polishers & Finishers - First 750 Hours

Effective Period: 7/1/2025 - 6/30/2026
Wage and Supplemental Rate Per Hour: 50% of Journeyperson's rate

NO BENEFITS PAID DURING THE FIRST TWO MONTHS (PROBATIONARY PERIOD)

Polishers & Finishers - Second 750 Hours

Effective Period: 7/1/2025 - 6/30/2026
Wage and Supplemental Rate Per Hour: 55% of Journeyperson's rate

Polishers & Finishers - Third 750 Hours

Effective Period: 7/1/2025 - 6/30/2026
Wage and Supplemental Rate Per Hour: 65% of Journeyperson's rate

Polishers & Finishers - Fourth 750 Hours

Effective Period: 7/1/2025 - 6/30/2026
Wage and Supplemental Rate Per Hour: 75% of Journeyperson's rate

Polishers & Finishers Last 700 Hours

Effective Period: 7/1/2025 - 6/30/2026
Wage and Supplemental Rate Per Hour: 85% of Journeyperson's rate

(Local #7)

MASON TENDER
(Ratio of Apprentice to Journeyperson: 1 to 1, 1 to 3)

Mason Tender - First Year

Effective Period: 7/1/2025 - 6/30/2026
Wage Rate per Hour: $21.75
Supplemental Benefit Rate per Hour: $11.62

Mason Tender - Second Year

Effective Period: 7/1/2025 - 6/30/2026
Wage Rate per Hour: $23.50
Supplemental Benefit Rate per Hour: $11.62

Mason Tender - Third Year

Effective Period: 7/1/2025 - 6/30/2026
Wage Rate per Hour: $25.00
Supplemental Benefit Rate per Hour: $11.62

Mason Tender - Fourth Year

Effective Period: 7/1/2025 - 6/30/2026
Wage Rate per Hour: $27.50
Supplemental Benefit Rate per Hour: $11.62

(Local #79)

MASON TENDER (INTERIOR DEMOLITION WORKER)
(Ratio of Apprentice to Journeyperson: 1 to 1, 1 to 3)

Mason Tender (Interior Demolition) - First Year

Effective Period: 7/1/2025 - 6/30/2026

Wage Rate per Hour: **$21.75**
Supplemental Benefit Rate per Hour: **$11.27**

Mason Tender (Interior Demolition) - Second Year

Effective Period: 7/1/2025 - 6/30/2026
Wage Rate per Hour: **$23.50**
Supplemental Benefit Rate per Hour: **$11.27**

Mason Tender (Interior Demolition) - Third Year

Effective Period: 7/1/2025 - 6/30/2026
Wage Rate per Hour: **$25.00**
Supplemental Benefit Rate per Hour: **$11.27**

Mason Tender (Interior Demolition) - Fourth Year

Effective Period: 7/1/2025 - 6/30/2026
Wage Rate per Hour: **$27.50**
Supplemental Benefit Rate per Hour: **$11.27**

(Local #79)

METALLIC LATHER
(Ratio of Apprentice to Journeyperson: 1 to 1, 1 to 3)

Metallic Lather (First Year)

Effective Period: 7/1/2025 - 6/30/2026
Wage Rate per Hour: **$22.55**
Supplemental Benefit Rate per Hour: **$17.87**

Metallic Lather (Second Year)

Effective Period: 7/1/2025 - 6/30/2026
Wage Rate per Hour: **$25.00**
Supplemental Benefit Rate per Hour: **$17.92**

Metallic Lather (Third Year)

Effective Period: 7/1/2025 - 6/30/2026
Wage Rate per Hour: $28.00
Supplemental Benefit Rate per Hour: $16.92

Metallic Lather (Fourth Year)

Effective Period: 7/1/2025 - 6/30/2026
Wage Rate per Hour: $30.00
Supplemental Benefit Rate per Hour: $16.92

(Local #46)

MILLWRIGHT
(Ratio of Apprentice to Journeyperson: 1 to 1, 1 to 4)

Millwright (First Year)

Effective Period: 7/1/2025 - 6/30/2026
Wage Rate per Hour: $32.74
Supplemental Benefit Rate per Hour: $38.29

Millwright (Second Year)

Effective Period: 7/1/2025 - 6/30/2026
Wage Rate per Hour: $38.39
Supplemental Benefit Rate per Hour: $41.99

Millwright (Third Year)

Effective Period: 7/1/2025 - 6/30/2026
Wage Rate per Hour: $44.04
Supplemental Benefit Rate per Hour: $46.34

Millwright (Fourth Year)

Effective Period: 7/1/2025 - 6/30/2026
Wage Rate per Hour: $55.34
Supplemental Benefit Rate per Hour: $53.10

(Local #740)

PAINTER

(Ratio of Apprentice to Journeyperson: 1 to 1, 1 to 3)

Painter - Brush & Roller - First Year

Effective Period: 7/1/2025 - 6/30/2026
Wage Rate per Hour: $17.90
Supplemental Benefit Rate per Hour: $19.64

Painter - Brush & Roller - Second Year

Effective Period: 7/1/2025 - 6/30/2026
Wage Rate per Hour: $22.38
Supplemental Benefit Rate per Hour: $25.19

Painter - Brush & Roller - Third Year

Effective Period: 7/1/2025 - 6/30/2026
Wage Rate per Hour: $26.85
Supplemental Benefit Rate per Hour: $29.72

Painter - Brush & Roller - Fourth Year

Effective Period: 7/1/2025 - 6/30/2026
Wage Rate per Hour: $35.80
Supplemental Benefit Rate per Hour: $38.54

(District Council of Painters)

PAINTER - BRIDGE & STRUCTURAL STEEL

(Ratio of Apprentice to Journeyperson: 1 to 1, 1 to 3)

Painter - Bridge & Structural Steel (First Year)

Effective Period: 7/1/2025 - 6/30/2026
Wage and Supplemental Rate Per Hour: 40% of Journeyperson's rate

Painter - Bridge & Structural Steel (Second Year)

Effective Period: 7/1/2025 - 6/30/2026
Wage and Supplemental Rate Per Hour: 60% of Journeyperson's rate

Painter - Bridge & Structural Steel (Third Year)

Effective Period: 7/1/2025 - 6/30/2026
Wage and Supplemental Rate Per Hour: 80% of Journeyperson's rate

(Local #806)

PAINTER - METAL POLISHER

(Ratio of Apprentice to Journeyperson: 1 to 1, 1 to 3)

Metal Polisher (First Year)

Effective Period: 7/1/2025 - 6/30/2026
Wage Rate per Hour: $20.17
Supplemental Benefit Rate per Hour: $8.91
New Construction - Wage Rate Per Hour: $20.56
Scaffold Over 34 Feet - Wage Rate Per Hour: $22.67

Metal Polisher (Second Year)

Effective Period: 7/1/2025 - 6/30/2026
Wage Rate per Hour: $22.18
Supplemental Benefit Rate per Hour: $8.91
New Construction - Wage Rate Per Hour: $22.62
Scaffold Over 34 Feet - Wage Rate Per Hour: $24.68

Metal Polisher (Third Year)

Effective Period: 7/1/2025 - 6/30/2026
Wage Rate per Hour: $24.20
Supplemental Benefit Rate per Hour: $8.91
New Construction - Wage Rate Per Hour: $24.74
Scaffold Over 34 Feet - Wage Rate Per Hour: $26.70

(Local 8A-28)

PLASTERER

(Ratio of Apprentice to Journeyperson: 1 to 1, 1 to 3)
(Each Term is 800 Hours.)

Plasterer - First Term

Effective Period: 7/1/2025 - 6/30/2026
Wage Rate Per Hour: 55% of Journeyperson's rate
Supplemental Rate Per Hour: $17.48

Plasterer - Second Term

Effective Period: 7/1/2025 - 6/30/2026
Wage Rate Per Hour: 60% of Journeyperson's rate
Supplemental Rate Per Hour: $18.63

Plasterer - Third Term

Effective Period: 7/1/2025 - 6/30/2026
Wage Rate Per Hour: 70% of Journeyperson's rate
Supplemental Rate Per Hour: $20.93

Plasterer - Fourth Term

Effective Period: 7/1/2025 - 6/30/2026
Wage Rate Per Hour: 75% of Journeyperson's rate
Supplemental Rate Per Hour: $22.10

(Local #262)

PLASTERER - TENDER

(Ratio of Apprentice to Journeyperson: 1 to 1, 1 to 3)

Plasterer Tender - First Year

Effective Period: 7/1/2025 - 6/30/2026
Wage Rate per Hour: $21.75
Supplemental Benefit Rate per Hour: $11.62

Plasterer Tender - Second Year

Effective Period: 7/1/2025 - 6/30/2026
Wage Rate per Hour: $23.50
Supplemental Benefit Rate per Hour: $11.62

Plasterer Tender - Third Year

Effective Period: 7/1/2025 - 6/30/2026
Wage Rate per Hour: $25.00
Supplemental Benefit Rate per Hour: $11.62

Plasterer Tender - Fourth Year

Effective Period: 7/1/2025 - 6/30/2026
Wage Rate per Hour: $27.50
Supplemental Benefit Rate per Hour: $11.62

(Local #79)

PLUMBER

(Ratio of Apprentice to Journeyperson: 1 to 1, 1 to 3)

Plumber - First Year: 1st Six Months

Effective Period: 7/1/2025 - 6/30/2026
Wage Rate per Hour: $19.00
Supplemental Benefit Rate per Hour: $5.43

Plumber - First Year: 2nd Six Months

Effective Period: 7/1/2025 - 6/30/2026
Wage Rate per Hour: $21.00
Supplemental Benefit Rate per Hour: $6.43

Plumber - Second Year

Effective Period: 7/1/2025 - 6/30/2026
Wage Rate per Hour: $30.90
Supplemental Benefit Rate per Hour: $23.81

Plumber - Third Year

Effective Period: 7/1/2025 - 6/30/2026
Wage Rate per Hour: $33.00
Supplemental Benefit Rate per Hour: $23.81

Plumber - Fourth Year

Effective Period: 7/1/2025 - 6/30/2026
Wage Rate per Hour: $35.85
Supplemental Benefit Rate per Hour: $23.81

Plumber - Fifth Year: 1st Six Months

Effective Period: 7/1/2025 - 6/30/2026
Wage Rate per Hour: $37.25
Supplemental Benefit Rate per Hour: $23.81

Plumber - Fifth Year: 2nd Six Months

Effective Period: 7/1/2025 - 6/30/2026
Wage Rate per Hour: $49.32
Supplemental Benefit Rate per Hour: $23.81

(Plumbers Local #1)

POINTER, WATERPROOFER, CAULKER, SANDBLASTER, STEAMBLASTER

(Exterior Building Renovation)
(Ratio of Apprentice to Journeyperson: 1 to 1, 1 to 4)

Pointer, Waterproofer, Caulker, Sandblaster, Steamblaster - First Year

Effective Period: 7/1/2025 - 6/30/2026
Wage Rate per Hour: $33.58
Supplemental Benefit Rate per Hour: $15.65

Pointer, Waterproofer, Caulker, Sandblaster, Steamblaster - Second Year

Effective Period: 7/1/2025 - 6/30/2026
Wage Rate per Hour: $38.04
Supplemental Benefit Rate per Hour: $21.00

Pointer, Waterproofer, Caulker, Sandblaster, Steamblaster - Third Year

Effective Period: 7/1/2025 - 6/30/2026
Wage Rate per Hour: $44.19
Supplemental Benefit Rate per Hour: $24.75

Pointer, Waterproofer, Caulker, Sandblaster, Steamblaster - Fourth Year

Effective Period: 7/1/2025 - 6/30/2026
Wage Rate per Hour: $53.10
Supplemental Benefit Rate per Hour: $25.75

(Bricklayer District Council)

ROOFER
(Ratio of Apprentice to Journeyperson: 1 to 1, 1 to 2)

Roofer - First Year

Effective Period: 7/1/2025 - 6/30/2026
Wage Rate Per Hour: 38% of Journeyperson's rate
Supplemental Benefit Rate Per Hour: $7.86

Roofer - Second Year

Effective Period: 7/1/2025 - 6/30/2026
Wage Rate Per Hour: 45% of Journeyperson's rate
Supplemental Benefit Rate Per Hour: $18.16

Roofer - Third Year

Effective Period: 7/1/2025 - 6/30/2026
Wage Rate Per Hour: 50% of Journeyperson's rate
Supplemental Benefit Rate Per Hour: $20.10

Roofer - Fourth Year

Effective Period: 7/1/2025 - 6/30/2026
Wage Rate Per Hour: 60% of Journeyperson's rate
Supplemental Benefit Rate Per Hour: $23.98

Roofer - Fifth Year

Effective Period: 7/1/2025 - 6/30/2026
Wage Rate Per Hour: 75% of Journeyperson's rate
Supplemental Benefit Rate Per Hour: $29.82

(Local #8)

SHEET METAL WORKER
(Ratio of Apprentice to Journeyperson: 1 to 1, 1 to 3)

Sheet Metal Worker (0-6 Months)

Effective Period: 7/1/2025 - 6/30/2026
Wage Rate per Hour: $18.97
Supplemental Benefit Rate per Hour: $8.09

Sheet Metal Worker (7-18 Months)

Effective Period: 7/1/2025 - 6/30/2026
Wage Rate per Hour: $18.97
Supplemental Benefit Rate per Hour: $22.10

Sheet Metal Worker (19-30 Months)

Effective Period: 7/1/2025 - 6/30/2026
Wage Rate per Hour: $24.45
Supplemental Benefit Rate per Hour: $29.88

Sheet Metal Worker (31-36 Months)

Effective Period: 7/1/2025 - 6/30/2026
Wage Rate per Hour: $29.95
Supplemental Benefit Rate per Hour: $35.37

Sheet Metal Worker (37-42 Months)

Effective Period: 7/1/2025 - 6/30/2026
Wage Rate per Hour: $29.95
Supplemental Benefit Rate per Hour: $35.37

Sheet Metal Worker (43-48 Months)

Effective Period: 7/1/2025 - 6/30/2026
Wage Rate per Hour: $38.19
Supplemental Benefit Rate per Hour: $43.64

Sheet Metal Worker (49-54 Months)

Effective Period: 7/1/2025 - 6/30/2026
Wage Rate per Hour: $38.19
Supplemental Benefit Rate per Hour: $43.64

Sheet Metal Worker (55-60 Months)

Effective Period: 7/1/2025 - 6/30/2026
Wage Rate per Hour: $43.66
Supplemental Benefit Rate per Hour: $49.16

(Local #28)

SIGN ERECTOR
(Ratio of Apprentice to Journeyperson: 1 to 1, 1 to 4)

Sign Erector - First Year: 1st Six Months

Effective Period: 7/1/2025 - 6/30/2026
Wage Rate Per Hour: 35% of Journeyperson's rate
Supplemental Rate Per Hour: $17.84

Sign Erector - First Year: 2nd Six Months

Effective Period: 7/1/2025 - 6/30/2026
Wage Rate Per Hour: 40% of Journeyperson's rate
Supplemental Rate Per Hour: $20.25

Sign Erector - Second Year: 1st Six Months

Effective Period: 7/1/2025 - 6/30/2026
Wage Rate Per Hour: 45% of Journeyperson's rate
Supplemental Rate Per Hour: $22.66

Sign Erector - Second Year: 2nd Six Months

Effective Period: 7/1/2025 - 6/30/2026
Wage Rate Per Hour: 50% of Journeyperson's rate
Supplemental Rate Per Hour: $25.09

Sign Erector - Third Year: 1st Six Months

Effective Period: 7/1/2025 - 6/30/2026
Wage Rate Per Hour: 55% of Journeyperson's rate
Supplemental Rate Per Hour: $33.83

Sign Erector - Third Year: 2nd Six Months

Effective Period: 7/1/2025 - 6/30/2026
Wage Rate Per Hour: 60% of Journeyperson's rate
Supplemental Rate Per Hour: $36.81

Sign Erector - Fourth Year: 1st Six Months

Effective Period: 7/1/2025 - 6/30/2026
Wage Rate Per Hour: 65% of Journeyperson's rate
Supplemental Rate Per Hour: $40.63

Sign Erector - Fourth Year: 2nd Six Months

Effective Period: 7/1/2025 - 6/30/2026
Wage Rate Per Hour: 70% of Journeyperson's rate
Supplemental Rate Per Hour: $43.70

Sign Erector - Fifth Year

Effective Period: 7/1/2025 - 6/30/2026
Wage Rate Per Hour: 75% of Journeyperson's rate
Supplemental Rate Per Hour: $46.76

Sign Erector - Sixth Year

Effective Period: 7/1/2025 - 6/30/2026
Wage Rate Per Hour: 80% of Journeyperson's rate
Supplemental Rate Per Hour: $49.80

(Local #137)

STEAMFITTER

(Ratio of Apprentice to Journeyperson: 1 to 1, 1 to 3)

Steamfitter - First Year

Effective Period: 7/1/2025 - 6/30/2026
Wage Rate and Supplemental Per Hour: 40% of Journeyperson's rate

Steamfitter - Second Year

Effective Period: 7/1/2025 - 6/30/2026
Wage Rate and Supplemental Rate Per Hour: 50% of Journeyperson's rate.

Steamfitter - Third Year

Effective Period: 7/1/2025 - 6/30/2026
Wage Rate and Supplemental Rate per Hour: 60% of Journeyperson's rate.

Steamfitter - Fourth Year

Effective Period: 7/1/2025 - 6/30/2026
Wage Rate and Supplemental Rate Per Hour: 70% of Journeyperson's rate.

Steamfitter - Fifth Year

Effective Period: 7/1/2025 - 6/30/2026
Wage Rate and Supplemental Rate Per Hour: 80% of Journeyperson's rate.

(Local #638)

STEAMFITTER - REFRIGERATION & AIR CONDITIONER

(Ratio of Apprentice to Journeyperson: 1 to 1, 1 to 3)

Refrigeration & Air Conditioner (First Year)

Effective Period: 7/1/2025 - 6/30/2026
Wage Rate per Hour: $22.31
Supplemental Benefit Rate per Hour: $14.47

Refrigeration & Air Conditioner (Second Year)

Effective Period: 7/1/2025 - 6/30/2026
Wage Rate per Hour: $26.94
Supplemental Benefit Rate per Hour: $15.91

Refrigeration & Air Conditioner (Third Year)

Effective Period: 7/1/2025 - 6/30/2026
Wage Rate per Hour: $31.38
Supplemental Benefit Rate per Hour: $17.41

Refrigeration & Air Conditioner (Fourth Year)

Effective Period: 7/1/2025 - 6/30/2026
Wage Rate per Hour: $37.90
Supplemental Benefit Rate per Hour: $19.44

(Local #638-B)

STONE MASON - SETTER

(Ratio Apprentice of Journeyperson: 1 to 1, 1 to 2)

Stone Mason - Setters - First 750 Hours

Effective Period: 7/1/2025 - 6/30/2026
Wage and Supplemental Rate Per Hour: 40% of Journeyperson's rate

Stone Mason - Setters - Second 750 Hours

Effective Period: 7/1/2025 - 6/30/2026
Wage and Supplemental Rate Per Hour: 50% of Journeyperson's rate

Stone Mason - Setters - Third 750 Hours

Effective Period: 7/1/2025 - 6/30/2026
Wage and Supplemental Rate Per Hour: 60% of Journeyperson's rate

Stone Mason - Setters - Fourth 750 Hours

Effective Period: 7/1/2025 - 6/30/2026
Wage and Supplemental Rate Per Hour: 70% of Journeyperson's rate

Stone Mason - Setters - Fifth 750 Hours

Effective Period: 7/1/2025 - 6/30/2026
Wage and Supplemental Rate Per Hour: 80% of Journeyperson's rate

Stone Mason - Setters - Sixth 750 Hours

Effective Period: 7/1/2025 - 6/30/2026
Wage and Supplemental Rate Per Hour: 90% of Journeyperson's rate

(Bricklayers District Council)

TAPER
(Ratio of Apprentice to Journeyperson: 1 to 1, 1 to 4)

Drywall Taper - First Year

Effective Period: 7/1/2025 - 6/30/2026
Wage Rate per Hour: $22.51
Supplemental Benefit Rate per Hour: $14.65

Drywall Taper - Second Year

Effective Period: 7/1/2025 - 6/30/2026
Wage Rate per Hour: $24.24
Supplemental Benefit Rate per Hour: $25.28

Drywall Taper - Third Year

Effective Period: 7/1/2025 - 6/30/2026
Wage Rate per Hour: $29.08
Supplemental Benefit Rate per Hour: $27.41

Drywall Taper - Fourth Year

Effective Period: 7/1/2025 - 6/30/2026
Wage Rate per Hour: $38.78
Supplemental Benefit Rate per Hour: $31.66

(Local #1974)

TILE LAYER - SETTER
(Ratio of Apprentice to Journeyperson: 1 to 1, 1 to 4)

Tile Layer - Setter - First 750 Hours

Effective Period: 7/1/2025 - 6/30/2026
Wage and Supplemental Rate Per Hour:35% of Journeyperson's rate

Tile Layer - Setter - Second 750 Hours

Effective Period: 7/1/2025 - 6/30/2026
Wage and Supplemental Rate Per Hour 40% of Journeyperson's rate

Tile Layer - Setter - Third 750 Hours

Effective Period: 7/1/2025 - 6/30/2026
Wage and Supplemental Rate Per Hour: 50% of Journeyperson's rate

Tile Layer - Setter - Fourth 750 Hours

Effective Period: 7/1/2025 - 6/30/2026
Wage and Supplemental Rate Per Hour: 55% of Journeyperson's rate

Tile Layer - Setter - Fifth 750 Hours

Effective Period: 7/1/2025 - 6/30/2026
Wage and Supplemental Rate Per Hour: 60% of Journeyperson's rate

Tile Layer - Setter - Sixth 750 Hours

Effective Period: 7/1/2025 - 6/30/2026
Wage and Supplemental Rate Per Hour: 65% of Journeyperson's rate

Tile Layer - Setter - Seventh 750 Hours

Effective Period: 7/1/2025 - 6/30/2026
Wage and Supplemental Rate Per Hour: 70% of Journeyperson's rate

Tile Layer - Setter - Eighth 750 Hours

Effective Period: 7/1/2025 - 6/30/2026
Wage and Supplemental Rate Per Hour: 75% of Journeyperson's rate

Tile Layer - Setter - Ninth 750 Hours

Effective Period: 7/1/2025 - 6/30/2026
Wage and Supplemental Rate Per Hour:80% of Journeyperson's rate

Tile Layer - Setter - Tenth 750 Hours

Effective Period: 7/1/2025 - 6/30/2026
Wage and Supplemental Rate Per Hour: 90% of Journeyperson's rate

(Local #7)

TIMBERPERSON

(Ratio of Apprentice to Journeyperson: 1 to 1, 1 to 6)

Timberperson - First Year

Effective Period: 7/1/2025 - 6/30/2026
Wage Rate Per Hour: $25.96
Supplemental Rate Per Hour: $38.69

Timberperson - Second Year

Effective Period: 7/1/2025 - 6/30/2026
Wage Rate Per Hour: $31.07
Supplemental Rate Per Hour: $38.69

Timberperson - Third Year

Effective Period: 7/1/2025 - 6/30/2026
Wage Rate Per Hour: $38.72
Supplemental Rate Per Hour: $38.69

Timberperson - Fourth Year

Effective Period: 7/1/2025 - 6/30/2026
Wage Rate Per Hour: $46.38
Supplemental Rate Per Hour: $38.69

(Local #1536)

THE CITY OF NEW YORK
OFFICE OF THE COMPTROLLER
BUREAU OF LABOR LAW
1 CENTRE STREET
NEW YORK, NY 10007

BRAD LANDER
COMPTROLLER

COMPTROLLER'S PREVAILING WAGE MEMORANDUM REGARDING FLAG PERSONS

June 1, 2024

This memorandum supersedes and replaces the Comptroller's Prevailing Wage Memoranda dated May 21, 1998 and related clarification dated March 13, 2001 concerning Flag Persons. This memorandum sets forth the superseding determination of the New York City Comptroller concerning the applicability of Article 8, Section 220 of the New York Labor Law (the "Labor Law") to individuals who perform traffic control duty or "flagger" tasks in connection with public works construction projects within the jurisdiction of the City of New York. The guidance set forth herein is effective July 1, 2024 and applies only to public works contracts and subcontracts solicited on or after such date.

For purposes of this memorandum, "traffic control duty" means tasks necessary or appropriate to alleviate congestion by directing the flow of pedestrian and/or vehicular traffic away from the vicinity of the construction site using a sign or flag. Workers performing traffic control duty in connection with a public works construction project, whether or not such workers are on, adjacent to, or in close proximity to the construction site, are performing the work of a construction "laborer," as directing traffic away from the job site serves to protect the public and safeguard the work crew. Such workers are thus subject to the prevailing wage requirements of Article 8, Section 220 of the Labor Law as "laborers, workmen, or mechanics." Accordingly, the Prevailing Rate of Wages and Supplements applies to such individuals.

Additionally, workers who perform "flagger" tasks relating to the protection of the public and/or work crew, including but not limited to erecting traffic cones, setting up construction site barriers, and directing the movement of trucks or construction equipment in, on, and off the site, also are subject to the requirements of Article 8, Section 220 of the Labor Law and the Prevailing Rate of Wages and Supplements.

This position is consistent with the New York State Department of Labor's position under Article 8 of the New York Labor Law and the U.S. Department of Labor's position under the Davis-Bacon Act and will promote and streamline compliance with prevailing wage requirements on the various public works construction projects within New York City.

If the trade performing the underlying work performs its own flagging or traffic control, e.g., bridge painters, the flagger or traffic control worker shall receive the same wages as the underlying trade. In the absence of an underlying trade, the flagger or traffic control worker shall receive the wages as set forth in the "Flagger" section of the New York City Comptroller's Construction Worker Prevailing Wage Schedule.

Contractors, agencies, and members of the public are encouraged to contact the Bureau of Labor Law to seek clarification regarding specific instances to ensure compliance with prevailing wage regulations and this memorandum.

Leonard A. Mancusi
SENIOR ASSISTANT COMPTROLLER

THE CITY OF NEW YORK
OFFICE OF THE COMPTROLLER
1 CENTRE STREET ROOM 1120
NEW YORK, N.Y. 10007-2341

TELEPHONE: (212) 669-3622
FAX NUMBER: (212) 669-8499

ALAN G. HEVESI
COMPTROLLER

MEMORANDUM

November 6, 2000

To *Agency Chief Contracting Officers*

From: *Leonard A. Mancusi*

Re: *Security at Construction Sites*

Prior to the enactment of Administrative Code §6-109, security guards on construction sites were not subject to prevailing wages. Security guards under the New York State labor law are covered under §230 which provides that prevailing wages are to be paid for security guards in existing buildings. §6-109 of the Administrative Code which was enacted in 1996 closed this loophole by including all security guards working pursuant to a city contract as a prevailing wage trade.

Although some construction contract boilerplate language has been amended to include §6-109, sub-contractors performing security services have advised us that they were not aware of this provision and, since traditionally, security guards were not a covered trade on construction sites, and they were not advised by a prime contractor that they would have to pay prevailing wages, they have not been doing so.

To avoid the possibility of issuing stop payments against prime contractors for the failure of their security service sub-contractors to pay

prevailing wages, we suggest that you write to all your existing security guard sub-contractors and their primes and in the future, upon approval of a security guard sub-contractor, advise the contractors of their obligation to pay prevailing wages under §6-109 of the Administrative Code.

As always, your cooperation is appreciated.

LAM:er
ACCO.SECURITY AT SITES

Department of Design and Construction

DIVISION OF INFRASTRUCTURE
BUREAU OF DESIGN

VOLUME 2 OF 3

PROJECT ID: QED1063AC

INSTALLATION OF DISTRIBUTION WATER MAINS

Together With All Work Incidental Thereto

BOROUGH OF QUEENS AND THE BRONX
CITY OF NEW YORK

_____
Contractor

_____

Dated_____, **20**___

_____

APPROVED AS TO FORM
CERTIFIED AS TO LEGAL AUTHORITY

_____
Acting Corporation Counsel

_____

Dated_____, **20**___

_____

Department of Design and Construction

THE CITY OF NEW YORK
DEPARTMENT OF DESIGN AND CONSTRUCTION
DIVISION OF INFRASTRUCTURE
30-30 THOMSON AVENUE
LONG ISLAND CITY, NY, 11101
TEL: 718.391.1000
WEB: www.nyc.gov/ddc

TO BE FILLED IN BY THE BIDDER:

BIDDER'S NAME:

_____

_____

BID SECURITY (CIRCLE ONE):
BID BOND / CERTIFIED CHECK

NUMBER OF ADDENDUMS RECEIVED AND ATTACHED TO BID:
_____ADDENDUMS

***DDC CLIENT AGENCY*:**
THE DEPARTMENT OF ENVIRONMENTAL PROTECTION

PREPARED BY:
IN HOUSE

DATE PREPARED:
08/07/2025

VOLUME 3 OF 3

FOR FURNISHING ALL LABOR AND MATERIALS NECESSARY AND REQUIRED FOR:

PROJECT ID: QED1063AC

SCHEDULE A SPECIFICATIONS AND REVISIONS TO STANDARD SPECIFICATIONS

INSTALLATION OF DISTRIBUTION WATER MAINS

TOGETHER WITH ALL WORK INCIDENTAL THERETO

BOROUGH OF QUEENS AND THE BRONX

CITY OF NEW YORK

CITY OF NEW YORK
DEPARTMENT OF DESIGN AND CONSTRUCTION
DIVISION OF INFRASTRUCTURE

ADDENDA CONTROL SHEET

BID SUBMISSION DATE/ TIME: Nov 24, 2025; between 8:30am and 11:00am
BID OPENING DATE/ TIME: Nov 24, 2024; 11:30am

PROJECT No.: QED1063AC

TITLE: **INSTALLATION OF DISTRIBUTION WATER MAINS**

ADDENDA ISSUED	NO. OF DWG	DATE	APPROVED BY: SPECS UNIT	GENERAL COUNSEL
#1 Questions from Bidders and Responses to Questions; Revision to PASSPort Forms	0	11/05/2025		

THE CITY OF NEW YORK
DEPARTMENT OF DESIGN AND CONSTRUCTION
DIVISION OF INFRASTRUCTURE

11/05/2025

ADDENDUM No. # 1

FOR FURNISHING ALL LABOR AND MATERIAL NECESSARY AND REQUIRED FOR:

85025Z0057-QED1063AC
INSTALLATION OF DISTRIBUTION WATER MAINS

This addendum is issued for the purpose of amending the requirements of the Bid and Contract Documents and is hereby made a part of said Bid and Contract Documents to the same extent as though it were originally included therein.

The bidder is advised that the items listed below apply to the project:

1. Bidders Questions and Responses to Questions:
No Attachment A. is included with this Addendum.

2. Revisions to Documents:
No Attachment B. is included with this Addendum.

3. Revisions to PASSPort forms:
Attachment C. is included with this Addendum.

Transferring Data Between Rounds of an RFX: A new document titled "Transferring Data Between Rounds of an RFX" has been added to the Documents section of the View RFx tab. Please refer to this document when an addendum has been issued. Note: Whenever an addendum is issued, the RFX item grid will be cleared. You can import the work you have already done by following the steps on this document.

DDC strongly advises vendors to finalize and submit bids 48 hours prior to due date and time. The City is not responsible for technical issues (e.g. internet connection, power outages, technology malfunction, computer errors, etc.) related to bid submissions.

If additional information is required, please contact the Department of Design and Construction, Contract Section at (718) 391-1041 or by email at CSB_projectinquiries@ddc.nyc.gov.

Richard Jones, PE CWI
Chief Engineer, Executive- Engineering Services

DDC PROJECT #: **QED1063AC**

PROJECT NAME: **INSTALLATION OF DISTRIBUTION WATER MAINS**

ATTACHMENT A - BIDDERS QUESTIONS AND DDC RESPONSES

None

DDC PROJECT #: **QED1063AC**

PROJECT NAME: **INSTALLATION OF DISTRIBUTION WATER MAINS**

ATTACHMENT B – REVISIONS TO THE DOCUMENTS

None

DDC PROJECT #: **QED1063AC**
PROJECT NAME: **INSTALLATION OF DISTRIBUTION WATER MAINS**

ATTACHMENT C – REVISIONS TO PASSPORT FORMS

This Addendum initiates Round 2 of the procurement.

Please note that numbering of addenda is independent of rounds.

Setup Changes:

M/WBE Requirements Changes:

Category	Earlier	Now
Black American	0%	0%
Hispanic American	0%	0%
Asian American	0%	0%
Native American	0%	0%
Women	0%	0%
Unspecified	9%	10%
Total	9%	10%

Questionnaire Changes:

None

Item Grid Changes:

None

CITY OF NEW YORK
DEPARTMENT OF DESIGN AND CONSTRUCTION
DIVISION OF INFRASTRUCTURE

ADDENDA CONTROL SHEET

BID SUBMISSION DATE/ TIME: Nov 24, 2025; between 8:30am and 11:00am
BID OPENING DATE/ TIME: Nov 24, 2024; 11:30am

PROJECT No.: QED1063AC

TITLE: **INSTALLATION OF DISTRIBUTION WATER MAINS**

ADDENDA ISSUED	NO. OF DWG	DATE	APPROVED BY: SPECS UNIT	GENERAL COUNSEL
#1 Questions from Bidders and Responses to Questions; Revision to PASSPort Forms	0	11/05/2025		
#2 Questions from Bidders and Responses to Questions; Revision to Documents	0	11/12/2025		

THE CITY OF NEW YORK
DEPARTMENT OF DESIGN AND CONSTRUCTION
DIVISION OF INFRASTRUCTURE

11/13/2025

ADDENDUM No. # 2

FOR FURNISHING ALL LABOR AND MATERIAL NECESSARY AND REQUIRED FOR:

85026B0023-QED1063AC
INSTALLATION OF DISTRIBUTION WATER MAINS

This addendum is issued for the purpose of amending the requirements of the Bid and Contract Documents and is hereby made a part of said Bid and Contract Documents to the same extent as though it were originally included therein.

The bidder is advised that the items listed below apply to the project:

1. Bidders Questions and Responses to Questions:
See Attachment A. is included with this Addendum.

2. Revisions to Documents:
See Attachment B. is included with this Addendum.

3. Revisions to PASSPort forms:
No Attachment C. is included with this Addendum.

Transferring Data Between Rounds of an RFX: A new document titled "Transferring Data Between Rounds of an RFX" has been added to the Documents section of the View RFx tab. Please refer to this document when an addendum has been issued. Note: Whenever an addendum is issued, the RFX item grid will be cleared. You can import the work you have already done by following the steps on this document.

DDC strongly advises vendors to finalize and submit bids 48 hours prior to due date and time. The City is not responsible for technical issues (e.g. internet connection, power outages, technology malfunction, computer errors, etc.) related to bid submissions.

If additional information is required, please contact the Department of Design and Construction, Contract Section at (718) 391-1041 or by email at CSB_projectinquiries@ddc.nyc.gov.

Richard Jones, PE CWI
Chief Engineer, Executive- Engineering Services

DDC PROJECT #: **QED1063AC**

PROJECT NAME: **INSTALLATION OF DISTRIBUTION WATER MAINS**

ATTACHMENT A - BIDDERS QUESTIONS AND DDC RESPONSES

No.	QUESTIONS	RESPONSES
1	Section 71.41.4 of Volume 3 (Specific Pavement Restoration Provisions) seems to be describing work typically covered by Item 4.02 AB-R, 1.5" Thick Wearing Course. This would be consistent with previous projects of a similar nature. However, this specification calls this work out under Item 4.02 AG, 3" Thick Wearing Course and the bid items match Item 4.02 AG. Since the top course of 1.5" also covers "additional width... beyond the edge of new base course" then this item wouldn't work since there would be two different widths and it's an area measurement.	Scope has been revised to included Item 4.02 AB-R
2	Section 71.41.4 of Volume 3 contains a chart on Page SW-12. The Payment Description for Item 4.02 CB reads, in part, to pay for "binder mixture top filler course under asphaltic concrete wearing course when no overlay is required". Can a sketch be provided to demonstrate what this is talking about?	No sketch/response to be provided.
3	Utility Plans show Scale: 1'=30". There is no scale check/calibration. Baselines do not scale to 1'=30". Many other dimensions are off by varying amounts. Please re-issue the drawings scaled properly or explain what is going on with the dimensions.	Refer to Attachment B of this Addendum.
4	Is it known that there is no bid item for a tree consultant?	Added Item 4.21

5	Is it known that there is no bid item for photographs?	No separate payment for the provisions of photographs; the cost is deemed included under all schedule items.
6	If a contractor experiences delay due to an unanticipated condition, and is caused to stop working, how is the contractor compensated for the these unanticipated costs? As an example, if there is an unmarked electric facility that is damaged and the contractor must stop working, how would the contractor be compensated for this unanticipated condition of not being able to work until the facility is repaired? Additionally, if there are other unanticipated delays that cause work to not be performed, such as a Con Edison Heat Emergency, how would the contractor be compensated to pay for the union employees that must be paid under GCA agreements.	Please refer to Article 6.20 – Downtime in the Joint Bid Agreement, contained in the Volume 3 JB-Pages.
7	If a contractor had to make changes to the project due to a lack of, or inaccurate pre-engineering by a utility company, how is the contractor compensated. As an example, if we have to install a Type 3 catch basin, in lieu of a Type 1 catch basin and there is not item for that, how are we compensated. This is an example. In these situations, how would the contractor be compensated.	Please refer to Article 6.15.2 – Extra Work for the Utilities in the Joint Bid Agreement, contained in the Volume 3 JB-Pages.
8	Location F is missing Traffic Stipulations for the following locations listed below. a. 111th Rd btw Farmers Blvd & 196th St b. 194th St btw 111th Avenue and 112th Road c. 112th Ave btw Farmers Blvd & 196th St d. 112th Rd btw Farmers Blvd & 196th St If stipulations are not going to be provided, then please clearly state what assumptions we should make regrading working hours and traffic maintenance.	Refer to Attachment B of this Addendum.

DDC PROJECT #: **QED1063AC**

PROJECT NAME: **INSTALLATION OF DISTRIBUTION WATER MAINS**

ATTACHMENT B – REVISIONS TO THE DOCUMENTS

1) **Updated Bid Schedule:**

   A) Item Added : 4.02 AB-R and 4.21

   B) Item Quantity Revised : 4.02 AG

2) **Drawings** : Revised Drawing QED1063AC Final Drawing Plans 1 of 2 (Addendum2) with updated scale.

3) **VOL3 OF 3 :** Uploaded latest OCMC (S-Page S-11 to S-22).

DDC PROJECT #: **QED1063AC**
PROJECT NAME: **INSTALLATION OF DISTRIBUTION WATER MAINS**

ATTACHMENT C – REVISIONS TO PASSPORT FORMS

This Addendum initiates Round 3 of the procurement.
Please note that numbering of addenda is independent of rounds.

Questionnaire Changes:

None

Item Grid Changes:

None

CITY OF NEW YORK
DEPARTMENT OF DESIGN AND CONSTRUCTION
DIVISION OF INFRASTRUCTURE

ADDENDA CONTROL SHEET

BID SUBMISSION DATE/ TIME: Nov 24, 2025; between 8:30am and 11:00am
BID OPENING DATE/ TIME: Nov 24, 2025; 11:30am

PROJECT No.: QED1063AC

TITLE: **INSTALLATION OF DISTRIBUTION WATER MAINS**

ADDENDA ISSUED	NO. OF DWG	DATE	APPROVED BY: SPECS UNIT	GENERAL COUNSEL
#1 Questions from Bidders and Responses to Questions; Revision to PASSPort Forms	0	11/05/2025		
#2 Questions from Bidders and Responses to Questions; Revision to Documents	0	11/13/2025		
#3 Questions from Bidders and Responses to Questions; Revision to Documents	0	11/14/2025		

THE CITY OF NEW YORK
DEPARTMENT OF DESIGN AND CONSTRUCTION
DIVISION OF INFRASTRUCTURE

11/14/2025

ADDENDUM No. # 3

FOR FURNISHING ALL LABOR AND MATERIAL NECESSARY AND REQUIRED FOR:

85026B0023-QED1063AC
INSTALLATION OF DISTRIBUTION WATER MAINS

This addendum is issued for the purpose of amending the requirements of the Bid and Contract Documents and is hereby made a part of said Bid and Contract Documents to the same extent as though it were originally included therein.

The bidder is advised that the items listed below apply to the project:

1. Bidders Questions and Responses to Questions:
See Attachment A. is included with this Addendum.

2. Revisions to Documents:
See Attachment B. is included with this Addendum.

3. Revisions to PASSPort forms:
No Attachment C. is included with this Addendum.

Transferring Data Between Rounds of an RFX: A new document titled "Transferring Data Between Rounds of an RFX" has been added to the Documents section of the View RFx tab. Please refer to this document when an addendum has been issued. Note: Whenever an addendum is issued, the RFX item grid will be cleared. You can import the work you have already done by following the steps on this document.

DDC strongly advises vendors to finalize and submit bids 48 hours prior to due date and time. The City is not responsible for technical issues (e.g. internet connection, power outages, technology malfunction, computer errors, etc.) related to bid submissions.

If additional information is required, please contact the Department of Design and Construction, Contract Section at (718) 391-1041 or by email at CSB_projectinquiries@ddc.nyc.gov.

Richard Jones, PE CWI
Chief Engineer, Executive- Engineering Services

DDC PROJECT #: **QED1063AC**

PROJECT NAME: **INSTALLATION OF DISTRIBUTION WATER MAINS**

ATTACHMENT A - BIDDERS QUESTIONS AND DDC RESPONSES

No.	QUESTIONS	RESPONSES
1	Please provide pavement cores. There are locations with varying traffic conditions and working hours. The cost of the restoration work cannot be accurately determined if it is not possible to determine the composition of the roadway at locations with traffic/hours restrictions.	No available pavement cores to be provided. Composition of roadway to match existing and can be determined during excavation of the roadway during construction
2	We have had multiple potential subcontractors inform us that there have been some recent projects in which DDC they provided their own SWPPP for a project, leaving the contractor just to file with SWPTS portal. Can we confirm if this will be the case for this project, or will the SWPPP need to be completed 100% by the contractor?	SWPPP has been completed by DDC Design, Contractor will need to file with SWPTS portal.

DDC PROJECT #: **QED1063AC**

PROJECT NAME: **INSTALLATION OF DISTRIBUTION WATER MAINS**

ATTACHMENT B – REVISIONS TO THE DOCUMENTS

1) **VOL3 OF 3 :** R-Pages : Updated R-Pages dated 11.12.25

DDC PROJECT #: **QED1063AC**
PROJECT NAME: **INSTALLATION OF DISTRIBUTION WATER MAINS**

ATTACHMENT C – REVISIONS TO PASSPORT FORMS

This Addendum initiates Round 4 of the procurement.
Please note that numbering of addenda is independent of rounds.

Questionnaire Changes:

None

Item Grid Changes:

None

CITY OF NEW YORK
DEPARTMENT OF DESIGN AND CONSTRUCTION
DIVISION OF INFRASTRUCTURE

ADDENDA CONTROL SHEET

BID SUBMISSION DATE/ TIME: Nov 24, 2025; between 8:30am and 11:00am
BID OPENING DATE/ TIME: Nov 24, 2025; 11:30am

PROJECT No.: QED1063AC

TITLE: **INSTALLATION OF DISTRIBUTION WATER MAINS**

ADDENDA ISSUED	NO. OF DWG	DATE	APPROVED BY: SPECS UNIT	GENERAL COUNSEL
#1 Questions from Bidders and Responses to Questions; Revision to PASSPort Forms	0	11/05/2025		
#2 Questions from Bidders and Responses to Questions; Revision to Documents	0	11/13/2025		
#3 Questions from Bidders and Responses to Questions; Revision to Documents	0	11/13/2025		
#4 Questions from Bidders and Responses to Questions; Revision to Documents	0	11/14/2025		JL

THE CITY OF NEW YORK
DEPARTMENT OF DESIGN AND CONSTRUCTION
DIVISION OF INFRASTRUCTURE

11/14/2025

ADDENDUM No. # 4

FOR FURNISHING ALL LABOR AND MATERIAL NECESSARY AND REQUIRED FOR:

85026B0023-QED1063AC
INSTALLATION OF DISTRIBUTION WATER MAINS

This addendum is issued for the purpose of amending the requirements of the Bid and Contract Documents and is hereby made a part of said Bid and Contract Documents to the same extent as though it were originally included therein.

The bidder is advised that the items listed below apply to the project:

1. Bidders Questions and Responses to Questions:
See Attachment A. is included with this Addendum.

2. Revisions to Documents:
See Attachment B. is included with this Addendum.

3. Revisions to PASSPort forms:
No Attachment C. is included with this Addendum.

Transferring Data Between Rounds of an RFX: A new document titled "Transferring Data Between Rounds of an RFX" has been added to the Documents section of the View RFx tab. Please refer to this document when an addendum has been issued. Note: Whenever an addendum is issued, the RFX item grid will be cleared. You can import the work you have already done by following the steps on this document.

DDC strongly advises vendors to finalize and submit bids 48 hours prior to due date and time. The City is not responsible for technical issues (e.g. internet connection, power outages, technology malfunction, computer errors, etc.) related to bid submissions.

If additional information is required, please contact the Department of Design and Construction, Contract Section at (718) 391-1041 or by email at CSB_projectinquiries@ddc.nyc.gov.

Richard Jones, PE CWI
Chief Engineer, Executive- Engineering Services

DDC PROJECT #: **QED1063AC**

PROJECT NAME: **INSTALLATION OF DISTRIBUTION WATER MAINS**

ATTACHMENT A - BIDDERS QUESTIONS AND DDC RESPONSES

No.	QUESTIONS	RESPONSES
1	For the color surface treatment, are we replacing only disturbed areas or are we required to go from edge to edge?	Only in disturbed area.
2	Where is item 6.34 ADTP to be used?	For decorative mesh fabric fencing
3	For the above project to be bid on November 24th, there are missing traffic stipulations for LOCATION F – QUEENS (CB#12). Included in the traffic stipulations are: FARMERS BOULEVARD BETWEEN MANGIN AVENUE AND 113TH AVENUE INTERSECTION OF FARMERS BOULEVARD AND 111TH ROAD INTERSECTION OF FARMERS BOULEVARD AND 112TH AVENUE INTERSECTION OF FARMERS BOULEVARD AND 112TH ROAD There are no traffic stipulations for the following locations: 111th Road, Farmers Boulevard to 196th Street Intersection of 111th Road at 194th Street Intersection of 111th Road at 196th Street 194th Street, 111th Avenue to 112th Road Intersection of 112th Road at 194th Street Intersection of 112th Road at 196th Street Intersection of 112th Avenue at 194th Street Intersection of 112th Avenue at 196th Street 112th Road, Farmers Boulevard to 196th Street 112th Avenue, Farmers Boulevard to 196th Street Additionally, any location that is on a roadway 34' wide or less should have traffic stipulations for local and emergency traffic only. It is not safe for the construction workers, staff, vehicular traffic or pedestrian traffic to maintain a lane for through traffic on a roadway not wide enough to accomodate as such.	Refer to Attachment B of Addendum 2.

4	Requesting a 2-week postponement due to the recent Addm that was issued.	No Postponement is necessary at this time.
5	Also please provide a bidders list.	Refer the Attachment B of this Addendum.

DDC PROJECT #: **QED1063AC**

PROJECT NAME: **INSTALLATION OF DISTRIBUTION WATER MAINS**

ATTACHMENT B – REVISIONS TO THE DOCUMENTS

1. Added Planholder List

DDC PROJECT #: **QED1063AC**
PROJECT NAME: **INSTALLATION OF DISTRIBUTION WATER MAINS**

ATTACHMENT C – REVISIONS TO PASSPORT FORMS

This Addendum included in Round 4 of the procurement.

Please note that numbering of addenda is independent of rounds.

Questionnaire Changes:

None

Item Grid Changes:

None

CITY OF NEW YORK
DEPARTMENT OF DESIGN AND CONSTRUCTION
DIVISION OF INFRASTRUCTURE

ADDENDA CONTROL SHEET

BID SUBMISSION DATE/ TIME: Dec 01, 2025; between 8:30am and 11:00am
BID OPENING DATE/ TIME: Dec 01, 2025; 11:30am

PROJECT No.: QED1063AC

TITLE: **INSTALLATION OF DISTRIBUTION WATER MAINS**

ADDENDA ISSUED	NO. OF DWG	DATE	APPROVED BY: SPECS UNIT	GENERAL COUNSEL
#1 Questions from Bidders and Responses to Questions; Revision to PASSPort Forms	0	11/05/2025		
#2 Questions from Bidders and Responses to Questions; Revision to Documents	0	11/13/2025		
#3 Questions from Bidders and Responses to Questions; Revision to Documents	0	11/13/2025		
#4 Questions from Bidders and Responses to Questions; Revision to Documents	0	11/14/2025		
#5 Questions from Bidders and Responses to Questions; Revision to Documents	0	11/20/2025		

THE CITY OF NEW YORK
DEPARTMENT OF DESIGN AND CONSTRUCTION
DIVISION OF INFRASTRUCTURE

11/20/2025

ADDENDUM No. # 5

FOR FURNISHING ALL LABOR AND MATERIAL NECESSARY AND REQUIRED FOR:

85026B0023-QED1063AC
INSTALLATION OF DISTRIBUTION WATER MAINS

This addendum is issued for the purpose of amending the requirements of the Bid and Contract Documents and is hereby made a part of said Bid and Contract Documents to the same extent as though it were originally included therein.

The bidder is advised that the items listed below apply to the project:

1. **The Bid Opening for the contract described above scheduled for November 24, 2025, at 11:30 am is rescheduled to December 01, 2025, at 11:30 am.**

2. **Bidders Questions and Responses to Questions:**
   See Attachment A. is included with this Addendum.

3. **Revisions to Documents:**
   See Attachment B. is included with this Addendum.

4. **Revisions to PASSPort forms:**
   See Attachment C. is included with this Addendum.

Transferring Data Between Rounds of an RFX: A new document titled "Transferring Data Between Rounds of an RFX" has been added to the Documents section of the View RFx tab. Please refer to this document when an addendum has been issued. Note: Whenever an addendum is issued, the RFX item grid will be cleared. You can import the work you have already done by following the steps on this document.

DDC strongly advises vendors to finalize and submit bids 48 hours prior to due date and time. The City is not responsible for technical issues (e.g. internet connection, power outages, technology malfunction, computer errors, etc.) related to bid submissions.

If additional information is required, please contact the Department of Design and Construction, Contract Section at (718) 391-1041 or by email at CSB_projectinquiries@ddc.nyc.gov.

Richard Jones, PE CWI
Chief Engineer, Executive- Engineering Services

DDC PROJECT #: **QED1063AC**

PROJECT NAME: **INSTALLATION OF DISTRIBUTION WATER MAINS**

ATTACHMENT A - BIDDERS QUESTIONS AND DDC RESPONSES

No.	QUESTIONS	RESPONSES
1	Will permanent asphalt restoration and sidewalk replacement for lead service replacement on public roads, sidewalks, and private property be paid out of the respective restoration items on the bid schedule (4.02 AG, 4.02 AB-R, 4.02 CB, 4.13 AAS, 4.13 BAS)?	Refer 64.14 specifications in SW-Page.
2	After Addendum No. 1, the MWBE goal was changed to 10%. However, after the recent release of Addendum No. 3, the MWBE goal was changed back to 9% on PASSPort. Please confirm if the MWBE goal is now 9% as shown on PASSPort, or if it is 10% as per Addendum No. 1.	Revised MWBE goals to 10%
3	The Special Experience Qualifications require an Erosion and Sediment Control Licensed/Certified Professional, but there is no pay item for this in the bid schedule. Usually we are given a pay item showing the number of days for the Erosion and Sediment Control Licensed/Certified Professional when they are required. Please clarify.	Erosion and Sediment Control is paid under Item 9.30 lump sum.
4	We respectfully request at least a 1-week postponement to the bid date. There are several bids being submitted on the same date, and combined with the upcoming holiday, the current bid date does not provide us and subcontractors with adequate time to submit a competitive bid.	Refer to the Attachment C of this Addendum.
5	In the specifications, it is stated we can be paid through the City bid items or the JB items for applicable work. In this bid, we have Furnish & Deliver/Laying Water Main items in both the City bid items and the JB items. What is used to determine when you are paid through the JB items or the City bid items if the item in question applied to both? Please clarify.	Paid item will not be applied to both, only through either JB items or City bid items. The RE will determine how the work will be paid.

6	In response to our inquiry regarding the requirement for Preparing and Submitting the SWPPP into the NYCDEP's SWPTS portal the following was part of Addendum #3: **"SWPPP has been completed by DDC Design, Contractor will need to file with SWPTS portal."** From the above, we interpret that DDC Design was the SWPPP preparer as defined in the Definitions section of Specification Section 9.30.2, and that the Contractor, through its Qualified Professional (QP), is responsible for filing the SWPPP into the SWPTS portal. In Specification Section 9.30.3 (as described in the SB 24-018) it is stated that ".. Within 30 days after the Contract is registered, the Contractor must submit a completed SWPPP to NYCDDC OEHS for review and acknowledgement. After approval by OEHS, the SWPPP must also be submitted to NYCDEP Stormwater Permitting Unit through the Stormwater Permitting and Tracking System (SWPTS) portal by the SWPPP Preparer for approval." The statement above seems to imply that it is the Contractor, and not the DDC, who has to prepare the SWPPP and submit it to DDC OEHS for approval, unless DDC is preparing the SWPPP as stated in its response to our question, and is reviewing its own work. Section 9.30.3 also seems to indicate that it is the SWPPP preparer who is charged with submitting the SWPPP through the SWPTS portal, so if the Contractor is the one filing the SWPPP into the SWPTS as stated in your response, the Contractor becomes the preparer (through its QP). Definition of QP in Section 9.30.2.4, and Section 9.30.3, in its 6th paragraph seem to reiterate that the QP is also the SWPPP preparer. "For the Qualified Professional, the Contractor must retain the services of an independent licensed/certified professional with practical experience in the principles and practices of erosion and sediment control and stormwater management, to prepare and certify a site specific SWPPP, along with all necessary shop drawings."	The SWPP for this project has already been prepared by DDC and approved by DEP. The contractor will have to retain a Qualified Professional (QP) meeting requirements of Section 9.30 who will be responsible for securing all necessary permits through NYCDEP Stormwater Permitting Unit via the Stormwater Permitting and Tracking System (SWPTS) portal. The QP will also be responsible for making and securing approval of any necessary modification if required by DEP or if the contractor wants to implement any necessary changes to the approved SWPP. The bidders must bid a LS value for item 9.30 that covers everything required by SECTION 9.30 - Stormwater Pollution Prevention and as shown on the Bid Schedule.

	All the above implies that one QP exists for the SWPPP preparation. The Specification in silent to the fact that there could be more than one QP. Setting aside that the caption above states that the QP is retained by the Contractor to prepare and certify a site-specific SWPPP, if more that one QP is allowed to be involved with the preparation and submittal of the SWPPP, as presented above then: 1. DDC retains the services of a QP who acts as the SWPPP preparer to prepare the SWPPP and reviews and accepts its own work. 2. Contractor retains the services of a QP to file the SWPPP with the SWPTS portal. The confusion here translates into the bidding process, as it is unclear who prepares the SWPPP: DDC Design or the Contractor. The cost associated with the preparation of the SWPPP is significant enough that it should be clear to the bidder if they should bear the SWPPP preparation cost or not.	
7	In regards to the traffic stipulations for the above referenced project: The traffic stipulations as written for any of the roadways can not be maintained safely for pedestrians and vehicular traffic. Therefore, we request the following amendments: Any roadways, 34 foot wide or less, we request that traffic stipulations be amended to "Contractor shall maintain one lane for local and emergency traffic with flaggers at both ends." Any roadways, 35 foot wide to 40 foot side, we request that traffic stipulations be amended to "Contractor shall maintain one lane for two-way traffic with flaggers at both ends." These changes will ensure the safety of the workers, pedestrians and passing vehicles.	The Contractor may engage/coordinate with DOT OCMC for their approval during Construction for any changes or updates to the currently approved traffic stipulations.

DDC PROJECT #: **QED1063AC**

PROJECT NAME: **INSTALLATION OF DISTRIBUTION WATER MAINS**

ATTACHMENT B – REVISIONS TO THE DOCUMENTS

None

DDC PROJECT #: **QED1063AC**
PROJECT NAME: **INSTALLATION OF DISTRIBUTION WATER MAINS**

ATTACHMENT C – REVISIONS TO PASSPORT FORMS

This Addendum included in Round 4 of the procurement.

Please note that numbering of addenda is independent of rounds.

Bid Opening Date Changes:

The Bid Opening for the contract described above scheduled for November 24, 2025, at 11:30 am is rescheduled to December 01, 2025, at 11:30 am

Questionnaire Changes:

None

Item Grid Changes:

None

CITY OF NEW YORK
DEPARTMENT OF DESIGN AND CONSTRUCTION
DIVISION OF INFRASTRUCTURE

ADDENDA CONTROL SHEET

BID SUBMISSION DATE/ TIME: Dec 01, 2025; between 8:30am and 11:00am
BID OPENING DATE/ TIME: Dec 01, 2025; 11:30am

PROJECT No.: QED1063AC

TITLE: **INSTALLATION OF DISTRIBUTION WATER MAINS**

ADDENDA ISSUED	NO. OF DWG	DATE	APPROVED BY: SPECS UNIT	GENERAL COUNSEL
#1 Questions from Bidders and Responses to Questions; Revision to PASSPort Forms	0	11/05/2025		
#2 Questions from Bidders and Responses to Questions; Revision to Documents	0	11/13/2025		
#3 Questions from Bidders and Responses to Questions; Revision to Documents	0	11/13/2025		
#4 Questions from Bidders and Responses to Questions; Revision to Documents	0	11/14/2025		
#5 Questions from Bidders and Responses to Questions; Revision to Documents	0	11/20/2025		
#6 Revision to PASSPort Forms	0	11/20/2025		

THE CITY OF NEW YORK
DEPARTMENT OF DESIGN AND CONSTRUCTION
DIVISION OF INFRASTRUCTURE

11/20/2025

ADDENDUM No. # 6

FOR FURNISHING ALL LABOR AND MATERIAL NECESSARY AND REQUIRED FOR:

85026B0023-QED1063AC
INSTALLATION OF DISTRIBUTION WATER MAINS

This addendum is issued for the purpose of amending the requirements of the Bid and Contract Documents and is hereby made a part of said Bid and Contract Documents to the same extent as though it were originally included therein.

The bidder is advised that the items listed below apply to the project:

1. Bidders Questions and Responses to Questions:
No Attachment A. is included with this Addendum.

2. Revisions to Documents:
No Attachment B. is included with this Addendum.

3. Revisions to PASSPort forms:
See Attachment C. is included with this Addendum.

Transferring Data Between Rounds of an RFX: A new document titled "Transferring Data Between Rounds of an RFX" has been added to the Documents section of the View RFx tab. Please refer to this document when an addendum has been issued. Note: Whenever an addendum is issued, the RFX item grid will be cleared. You can import the work you have already done by following the steps on this document.

DDC strongly advises vendors to finalize and submit bids 48 hours prior to due date and time. The City is not responsible for technical issues (e.g. internet connection, power outages, technology malfunction, computer errors, etc.) related to bid submissions.

If additional information is required, please contact the Department of Design and Construction, Contract Section at (718) 391-1041 or by email at CSB_projectinquiries@ddc.nyc.gov.

Richard Jones, PE CWI
Chief Engineer, Executive- Engineering Services

DDC PROJECT #: **QED1063AC**

PROJECT NAME: **INSTALLATION OF DISTRIBUTION WATER MAINS**

ATTACHMENT A - BIDDERS QUESTIONS AND DDC RESPONSES

None

DDC PROJECT #: **QED1063AC**

PROJECT NAME: **INSTALLATION OF DISTRIBUTION WATER MAINS**

ATTACHMENT B – REVISIONS TO THE DOCUMENTS

None

DDC PROJECT #: **QED1063AC**
PROJECT NAME: **INSTALLATION OF DISTRIBUTION WATER MAINS**

ATTACHMENT C – REVISIONS TO PASSPORT FORMS

This Addendum included in Round 4 of the procurement.

Please note that numbering of addenda is independent of rounds.

Setup Changes:

M/WBE Requirements Changes:

Category	Earlier	Now
Black American	0%	0%
Hispanic American	0%	0%
Asian American	0%	0%
Native American	0%	0%
Women	0%	0%
Unspecified	9%	10%
Total	9%	10%

Questionnaire Changes:

None

Item Grid Changes:

None

CITY OF NEW YORK
DEPARTMENT OF DESIGN AND CONSTRUCTION
DIVISION OF INFRASTRUCTURE

ADDENDA CONTROL SHEET

BID SUBMISSION DATE/ TIME: Dec 01, 2025; between 8:30am and 11:00am
BID OPENING DATE/ TIME: Dec 01, 2025; 11:30am

PROJECT No.: QED1063AC

TITLE: **INSTALLATION OF DISTRIBUTION WATER MAINS**

ADDENDA ISSUED	NO. OF DWG	DATE	APPROVED BY: SPECS UNIT	GENERAL COUNSEL
#1 Questions from Bidders and Responses to Questions; Revision to PASSPort Forms	0	11/05/2025		
#2 Questions from Bidders and Responses to Questions; Revision to Documents	0	11/13/2025		
#3 Questions from Bidders and Responses to Questions; Revision to Documents	0	11/13/2025		
#4 Questions from Bidders and Responses to Questions; Revision to Documents	0	11/14/2025		
#5 Questions from Bidders and Responses to Questions; Revision to Documents	0	11/20/2025		
#6 Revision to PASSPort Forms	0	11/20/2025		
#7 Revised Bid Opening Date	0	11/25/2025		

THE CITY OF NEW YORK
DEPARTMENT OF DESIGN AND CONSTRUCTION
DIVISION OF INFRASTRUCTURE

11/25/2025

ADDENDUM No. # 7

FOR FURNISHING ALL LABOR AND MATERIAL NECESSARY AND REQUIRED FOR:

85026B0023-QED1063AC
INSTALLATION OF DISTRIBUTION WATER MAINS

This addendum is issued for the purpose of amending the requirements of the Bid and Contract Documents and is hereby made a part of said Bid and Contract Documents to the same extent as though it were originally included therein.

The bidder is advised that the items listed below apply to the project:

1. **The Bid Opening for the contract described above scheduled for December 01, 2025, at 11:30 am is rescheduled to December 10, 2025, at 11:30 am.**

2. **Bidders Questions and Responses to Questions:**
   No Attachment A is included with this Addendum.

3. **Revisions to Documents:**
   No Attachment B is included with this Addendum.

4. **Revisions to PASSPort forms:**
   Attachment C is included with this Addendum.

Transferring Data Between Rounds of an RFX: A new document titled "Transferring Data Between Rounds of an RFX" has been added to the Documents section of the View RFx tab. Please refer to this document when an addendum has been issued. Note: Whenever an addendum is issued, the RFX item grid will be cleared. You can import the work you have already done by following the steps on this document.

DDC strongly advises vendors to finalize and submit bids 48 hours prior to due date and time. The City is not responsible for technical issues (e.g. internet connection, power outages, technology malfunction, computer errors, etc.) related to bid submissions.

If additional information is required, please contact the Department of Design and Construction, Contract Section at (718) 391-1041 or by email at CSB_projectinquiries@ddc.nyc.gov.

Richard Jones, PE CWI
Chief Engineer, Executive- Engineering Services

DDC PROJECT #: **QED1063AC**

PROJECT NAME: **INSTALLATION OF DISTRIBUTION WATER MAINS**

ATTACHMENT A - BIDDERS QUESTIONS AND DDC RESPONSES

None

DDC PROJECT #: **QED1063AC**

PROJECT NAME: **INSTALLATION OF DISTRIBUTION WATER MAINS**

ATTACHMENT B – REVISIONS TO THE DOCUMENTS

None

DDC PROJECT #: **QED1063AC**
PROJECT NAME: **INSTALLATION OF DISTRIBUTION WATER MAINS**

ATTACHMENT C – REVISIONS TO PASSPORT FORMS

This Addendum included in Round 4 of the procurement.

Please note that numbering of addenda is independent of rounds.

Bid Opening Date Changes:

The Bid Opening for the contract described above scheduled for December 01, 2025, at 11:30 am is rescheduled to December 10, 2025, at 11:30 am

Questionnaire Changes:

None

Item Grid Changes:

None

CITY OF NEW YORK
DEPARTMENT OF DESIGN AND CONSTRUCTION
DIVISION OF INFRASTRUCTURE

ADDENDA CONTROL SHEET

BID SUBMISSION DATE/ TIME: Dec 10, 2025; between 8:30am and 11:00am
BID OPENING DATE/ TIME: Dec 10, 2025; 11:30am

PROJECT No.: QED1063AC

TITLE: **INSTALLATION OF DISTRIBUTION WATER MAINS**

ADDENDA ISSUED	NO. OF DWG	DATE	APPROVED BY: SPECS UNIT	GENERAL COUNSEL
#1 Questions from Bidders and Responses to Questions; Revision to PASSPort Forms	0	11/05/2025		
#2 Questions from Bidders and Responses to Questions; Revision to Documents	0	11/13/2025		
#3 Questions from Bidders and Responses to Questions; Revision to Documents	0	11/13/2025		
#4 Questions from Bidders and Responses to Questions; Revision to Documents	0	11/14/2025		
#5 Questions from Bidders and Responses to Questions; Revision to Documents	0	11/20/2025		
#6 Revision to PASSPort Forms	0	11/20/2025		
#7 Revised Bid Opening Date	0	11/24/2025		
#8 Questions from Bidders and Responses to Questions; Revision to Documents	2	11/28/2025		

THE CITY OF NEW YORK
DEPARTMENT OF DESIGN AND CONSTRUCTION
DIVISION OF INFRASTRUCTURE

11/28/2025

ADDENDUM No. # 8

FOR FURNISHING ALL LABOR AND MATERIAL NECESSARY AND REQUIRED FOR:

85026B0023-QED1063AC
INSTALLATION OF DISTRIBUTION WATER MAINS

This addendum is issued for the purpose of amending the requirements of the Bid and Contract Documents and is hereby made a part of said Bid and Contract Documents to the same extent as though it were originally included therein.

The bidder is advised that the items listed below apply to the project:

1. Bidders Questions and Responses to Questions:
See Attachment A. is included with this Addendum.

2. Revisions to Documents:
See Attachment B. is included with this Addendum.

3. Revisions to PASSPort forms:
See Attachment C. is included with this Addendum.

Transferring Data Between Rounds of an RFX: A new document titled "Transferring Data Between Rounds of an RFX" has been added to the Documents section of the View RFx tab. Please refer to this document when an addendum has been issued. Note: Whenever an addendum is issued, the RFX item grid will be cleared. You can import the work you have already done by following the steps on this document.

DDC strongly advises vendors to finalize and submit bids 48 hours prior to due date and time. The City is not responsible for technical issues (e.g. internet connection, power outages, technology malfunction, computer errors, etc.) related to bid submissions.

If additional information is required, please contact the Department of Design and Construction, Contract Section at (718) 391-1041 or by email at CSB_projectinquiries@ddc.nyc.gov.

Richard Jones, PE CWI
Chief Engineer, Executive- Engineering Services

DDC PROJECT #: **QED1063AC**

PROJECT NAME: **INSTALLATION OF DISTRIBUTION WATER MAINS**

ATTACHMENT A - BIDDERS QUESTIONS AND DDC RESPONSES

No.	QUESTIONS	RESPONSES
1	In response to question 2 on Addendum 4, the Item 6.34 ADTP is not found anywhere on the MPT Drawings. The decorative mech fabric fencing is shown to be installed on pedestrian channelizers (item 7.35). Please indicate what location/street where the 6.34 ADTP item is to be used.	Decorative mesh fabric fencing can also be mounted on item 6.34 ADTP as per specification section 9.06, or on the pedestrian channelizers, whichever method the Contractor prefers. No specific location for where 6.34 ADTP to be used. Decorative Mesh Fabric Fencing locations to be determined by the Resident Engineer in the field.
2	Please confirm that the DEP will perform all required WM shutdowns, regardless of the time and size needed in order to relay the watermains.	Refer to Standard Sewer and Watermain Specification SECTION 60.12.
3	To whom it may concern, The GCA is requesting the DDC further extend the due date for the 'Installation of Distribution Water Mains project by one week. At present, several of our member are interested in bidding this project, along with the Green Infrastructure in Gravesend Bay CSO project that bids two days later. With the Thanksgiving holiday next week, many subcontractors and suppliers have limited availability to provide pricing. The additional time will provide DDC with maximum competition at the most competitive price on both projects.	Refer to Attachment C of Addendum7
4	Item JB350T/TWC states the following: a. Partial payments shall be made in proportion to the percentage (%) of contract completion as determined by the facility operator in consultation with the Resident Engineer. Item JB350 does not have that that sentence. How is Item JB350 paid?	Refer to Attachment B of this Addendum.

5	Addendum 5, Question 6 had the following in the response: "The SWPP for this project has already been prepared by DDC and approved by DEP. The contractor will have to retain a Qualified Professional (QP) meeting requirements of Section 9.30 who will be responsible for securing all necessary permits through NYCDEP Stormwater Permitting Unit via the Stormwater Permitting and Tracking System (SWPTS) portal. The QP will also be responsible for making and securing approval of any necessary modification if required by DEP or if the contractor wants to implement any necessary changes to the approved SWPP. The bidders must bid a LS value for item 9.30 that covers everything required by SECTION 9.30 - Stormwater Pollution Prevention and as shown on the Bid Schedule." However, this project has 4 sites in Queens and 2 in The Bronx. If they are submitted together as one SWPPP, all of the locations must be completed to file an NOT. However, if each location has its own SWPPP, upon completion of a location, a NOT can be filed. The question is, was the SWPPP prepared individually or as one report for all locations?	SWPPP was prepared as one report. Only Location E requires a SWPPP, locations A, B, C, D, and F do not meet the requirements for needing a SWPPP.

DDC PROJECT #: **QED1063AC**

PROJECT NAME: **INSTALLATION OF DISTRIBUTION WATER MAINS**

ATTACHMENT B – REVISIONS TO THE DOCUMENTS

1) VOL3 OF 3 : Revised JB-OC Package in VOL3 of 3 Addendum8
    1) JB-19 and JB-30 Removed
    2) JB- 171 - Revised

2) DRAWING:
    A) QED1063AC Final Drawing Plans 1 of 2 Addendum8 (Revised Table of Content)
    B) QED1063AC Final Drawing Plans 2 of 2 Addendum8 (Removed 2 Page of Charter Spectrum Drawing at end).

DDC PROJECT #: **QED1063AC**
PROJECT NAME: **INSTALLATION OF DISTRIBUTION WATER MAINS**

ATTACHMENT C – REVISIONS TO PASSPORT FORMS

This Addendum initiates Round 5 of the procurement.
Please note that numbering of addenda is independent of rounds.

Questionnaire Changes:

None

Item Grid Changes:

None

CITY OF NEW YORK
DEPARTMENT OF DESIGN AND CONSTRUCTION
DIVISION OF INFRASTRUCTURE

ADDENDA CONTROL SHEET

BID SUBMISSION DATE/ TIME: Dec 10, 2025; between 8:30am and 11:00am
BID OPENING DATE/ TIME: Dec 10, 2025; 11:30am

PROJECT No.: QED1063AC

TITLE: **INSTALLATION OF DISTRIBUTION WATER MAINS**

ADDENDA ISSUED	NO. OF DWG	DATE	APPROVED BY: SPECS UNIT	GENERAL COUNSEL
#1 Questions from Bidders and Responses to Questions; Revision to PASSPort Forms	0	11/05/2025		
#2 Questions from Bidders and Responses to Questions; Revision to Documents	0	11/13/2025		
#3 Questions from Bidders and Responses to Questions; Revision to Documents	0	11/13/2025		
#4 Questions from Bidders and Responses to Questions; Revision to Documents	0	11/14/2025		
#5 Questions from Bidders and Responses to Questions; Revision to Documents	0	11/20/2025		
#6 Revision to PASSPort Forms	0	11/20/2025		
#7 Revised Bid Opening Date	0	11/24/2025		
#8 Questions from Bidders and Responses to Questions; Revision to Documents	2	11/28/2025		
#9 Questions from Bidders and Responses to Questions; Revision to Documents	0	12/03/2025		

THE CITY OF NEW YORK
DEPARTMENT OF DESIGN AND CONSTRUCTION
DIVISION OF INFRASTRUCTURE

12/03/2025

ADDENDUM No. # 9

FOR FURNISHING ALL LABOR AND MATERIAL NECESSARY AND REQUIRED FOR:

85026B0023-QED1063AC
INSTALLATION OF DISTRIBUTION WATER MAINS

This addendum is issued for the purpose of amending the requirements of the Bid and Contract Documents and is hereby made a part of said Bid and Contract Documents to the same extent as though it were originally included therein.

The bidder is advised that the items listed below apply to the project:

1. Bidders Questions and Responses to Questions:
See Attachment A. is included with this Addendum.

2. Revisions to Documents:
See Attachment B. is included with this Addendum.

3. Revisions to PASSPort forms:
No Attachment C. is included with this Addendum.

Transferring Data Between Rounds of an RFX: A new document titled "Transferring Data Between Rounds of an RFX" has been added to the Documents section of the View RFx tab. Please refer to this document when an addendum has been issued. Note: Whenever an addendum is issued, the RFX item grid will be cleared. You can import the work you have already done by following the steps on this document.

DDC strongly advises vendors to finalize and submit bids 48 hours prior to due date and time. The City is not responsible for technical issues (e.g. internet connection, power outages, technology malfunction, computer errors, etc.) related to bid submissions.

If additional information is required, please contact the Department of Design and Construction, Contract Section at (718) 391-1041 or by email at CSB_projectinquiries@ddc.nyc.gov.

for RJ

Richard Jones, PE CWI
Chief Engineer, Executive- Engineering Services

DDC PROJECT #: **QED1063AC**

PROJECT NAME: **INSTALLATION OF DISTRIBUTION WATER MAINS**

ATTACHMENT A - BIDDERS QUESTIONS AND DDC RESPONSES

No.	QUESTIONS	RESPONSES
1	Addendum 8 was released today. Page 5 - Attachment B states that: VOL3 OF 3 : Revised JB-OC Package in VOL3 of 3 Addendum8 1. JB-19 and JB-30 Removed 2. JB- 171 - Revised A) Please note that JB-19 and JB-30 are still within Vol 3 of 3 in Addendum 8 B) Please indicate on JB-171 what the stated revisions are. C) Also, the page sequence seems to be out of order. Can all of this be adjusted and released once again please?	A) JB-19-JB 350T/TWC is removed and JB-30-Appendix B-PI Check Point Tasks removed from QED1063AC VOL3 OF 3 Addedum3. B) Because of revision Page JB-171 does not exist, it has now turned into JB-168 (QED1063AC VOL3 OF 3 Addedum9) ALTICE Table is revised. C) We have revised page numbering on JB-Pages.

DDC PROJECT #: **QED1063AC**

PROJECT NAME: **INSTALLATION OF DISTRIBUTION WATER MAINS**

ATTACHMENT B – REVISIONS TO THE DOCUMENTS

1) VOL3 OF 3 : Revised JB-OC Package in QED1063AC VOL3 of 3 Addendum9
    1) JB-19-JB 350T/TWC and JB-30-Appendix removed from QED1063AC VOL3 of 3 Addendum3.
    2) JB-171 (QED1063AC VOL3 OF 3 Addedum3) which is now JB-168 (QED1063AC VOL3 OF 3 Addedum9) ALTICE Table is revised.

DDC PROJECT #: **QED1063AC**
PROJECT NAME: **INSTALLATION OF DISTRIBUTION WATER MAINS**

ATTACHMENT C – REVISIONS TO PASSPORT FORMS

This Addendum initiates Round 6 of the procurement.

Please note that numbering of addenda is independent of rounds.

Questionnaire Changes:

None

Item Grid Changes:

None

CITY OF NEW YORK
DEPARTMENT OF DESIGN AND CONSTRUCTION
DIVISION OF INFRASTRUCTURE

ADDENDA CONTROL SHEET

BID SUBMISSION DATE/ TIME: Dec 22, 2025; between 8:30am and 11:00am
BID OPENING DATE/ TIME: Dec 22, 2025; 11:30am

PROJECT No.: QED1063AC

TITLE: **INSTALLATION OF DISTRIBUTION WATER MAINS**

ADDENDA ISSUED	NO. OF DWG	DATE	APPROVED BY: SPECS UNIT	GENERAL COUNSEL
#1 Questions from Bidders and Responses to Questions; Revision to PASSPort Forms	0	11/05/2025		
#2 Questions from Bidders and Responses to Questions; Revision to Documents	0	11/13/2025		
#3 Questions from Bidders and Responses to Questions; Revision to Documents	0	11/13/2025		
#4 Questions from Bidders and Responses to Questions; Revision to Documents	0	11/14/2025		
#5 Questions from Bidders and Responses to Questions; Revision to Documents	0	11/20/2025		
#6 Revision to PASSPort Forms	0	11/20/2025		
#7 Revised Bid Opening Date	0	11/24/2025		
#8 Questions from Bidders and Responses to Questions; Revision to Documents	2	11/28/2025		
#9 Questions from Bidders and Responses to Questions; Revision to Documents	0	12/03/2025		
#10 Revised Bid Opening Date	0	12/08/2025		

THE CITY OF NEW YORK
DEPARTMENT OF DESIGN AND CONSTRUCTION
DIVISION OF INFRASTRUCTURE

12/08/2025

ADDENDUM No. # 10

FOR FURNISHING ALL LABOR AND MATERIAL NECESSARY AND REQUIRED FOR:

85026B0023-QED1063AC
INSTALLATION OF DISTRIBUTION WATER MAINS

This addendum is issued for the purpose of amending the requirements of the Bid and Contract Documents and is hereby made a part of said Bid and Contract Documents to the same extent as though it were originally included therein.

The bidder is advised that the items listed below apply to the project:

1. **The Bid Opening for the contract described above scheduled for December 10, 2025, at 11:30 am is rescheduled to December 22, 2025, at 11:30 am.**

2. **Bidders Questions and Responses to Questions:**
   No Attachment A. is included with this Addendum.

3. **Revisions to Documents:**
   No Attachment B. is included with this Addendum.

4. **Revisions to PASSPort forms:**
   See Attachment C. is included with this Addendum.

Transferring Data Between Rounds of an RFX: A new document titled “Transferring Data Between Rounds of an RFX” has been added to the Documents section of the View RFx tab. Please refer to this document when an addendum has been issued. Note: Whenever an addendum is issued, the RFX item grid will be cleared. You can import the work you have already done by following the steps on this document.

DDC strongly advises vendors to finalize and submit bids 48 hours prior to due date and time. The City is not responsible for technical issues (e.g. internet connection, power outages, technology malfunction, computer errors, etc.) related to bid submissions.

If additional information is required, please contact the Department of Design and Construction, Contract Section at (718) 391-1041 or by email at CSB_projectinquiries@ddc.nyc.gov.

Richard Jones, PE CWI
Chief Engineer, Executive- Engineering Services

DDC PROJECT #: **QED1063AC**

PROJECT NAME: **INSTALLATION OF DISTRIBUTION WATER MAINS**

ATTACHMENT A - BIDDERS QUESTIONS AND DDC RESPONSES

None

DDC PROJECT #: **QED1063AC**

PROJECT NAME: **INSTALLATION OF DISTRIBUTION WATER MAINS**

ATTACHMENT B – REVISIONS TO THE DOCUMENTS

None

DDC PROJECT #: **QED1063AC**
PROJECT NAME: **INSTALLATION OF DISTRIBUTION WATER MAINS**

ATTACHMENT C – REVISIONS TO PASSPORT FORMS

This Addendum included in Round 6 of the procurement.

Please note that numbering of addenda is independent of rounds.

Bid Opening Date Changes:

The Bid Opening for the contract described above scheduled for December 10, 2025, at 11:30 am is rescheduled to December 22, 2025, at 11:30 am

Questionnaire Changes:

None

Item Grid Changes:

None

CITY OF NEW YORK
DEPARTMENT OF DESIGN AND CONSTRUCTION
DIVISION OF INFRASTRUCTURE

ADDENDA CONTROL SHEET

BID SUBMISSION DATE/ TIME: Dec 22, 2025; between 8:30am and 11:00am
BID OPENING DATE/ TIME: Dec 22, 2025; 11:30am

PROJECT No.: QED1063AC

TITLE: **INSTALLATION OF DISTRIBUTION WATER MAINS**

ADDENDA ISSUED	NO. OF DWG	DATE	APPROVED BY: SPECS UNIT	GENERAL COUNSEL
#1 Questions from Bidders and Responses to Questions; Revision to PASSPort Forms	0	11/05/2025		
#2 Questions from Bidders and Responses to Questions; Revision to Documents	0	11/13/2025		
#3 Questions from Bidders and Responses to Questions; Revision to Documents	0	11/13/2025		
#4 Questions from Bidders and Responses to Questions; Revision to Documents	0	11/14/2025		
#5 Questions from Bidders and Responses to Questions; Revision to Documents	0	11/20/2025		
#6 Revision to PASSPort Forms	0	11/20/2025		
#7 Revised Bid Opening Date	0	11/24/2025		
#8 Questions from Bidders and Responses to Questions; Revision to Documents	2	11/28/2025		
#9 Questions from Bidders and Responses to Questions; Revision to Documents	0	12/03/2025		
#10 Revised Bid Opening Date	0	12/08/2025		
#11 Questions from Bidders and Responses to Questions; Revision to Documents	0	12/12/2025		

THE CITY OF NEW YORK
DEPARTMENT OF DESIGN AND CONSTRUCTION
DIVISION OF INFRASTRUCTURE

12/12/2025

ADDENDUM No. # 11

FOR FURNISHING ALL LABOR AND MATERIAL NECESSARY AND REQUIRED FOR:

85026B0023-QED1063AC
INSTALLATION OF DISTRIBUTION WATER MAINS

This addendum is issued for the purpose of amending the requirements of the Bid and Contract Documents and is hereby made a part of said Bid and Contract Documents to the same extent as though it were originally included therein.

The bidder is advised that the items listed below apply to the project:

1. Bidders Questions and Responses to Questions:
See Attachment A. is included with this Addendum.

2. Revisions to Documents:
See Attachment B. is included with this Addendum.

3. Revisions to PASSPort forms:
No Attachment C. is included with this Addendum.

Transferring Data Between Rounds of an RFX: A new document titled "Transferring Data Between Rounds of an RFX" has been added to the Documents section of the View RFx tab. Please refer to this document when an addendum has been issued. Note: Whenever an addendum is issued, the RFX item grid will be cleared. You can import the work you have already done by following the steps on this document.

DDC strongly advises vendors to finalize and submit bids 48 hours prior to due date and time. The City is not responsible for technical issues (e.g. internet connection, power outages, technology malfunction, computer errors, etc.) related to bid submissions.

If additional information is required, please contact the Department of Design and Construction, Contract Section at (718) 391-1041 or by email at CSB_projectinquiries@ddc.nyc.gov.

Richard Jones, PE CWI
Chief Engineer, Executive- Engineering Services

DDC PROJECT #: **QED1063AC**

PROJECT NAME: **INSTALLATION OF DISTRIBUTION WATER MAINS**

ATTACHMENT A - BIDDERS QUESTIONS AND DDC RESPONSES

No.	QUESTIONS	RESPONSES
1	Is Item JB 350 paid in lump sum at the end of the project, or in percentage of project completed?	Please refer to Standard Construction Contract Article 41.

DDC PROJECT #: **QED1063AC**

PROJECT NAME: **INSTALLATION OF DISTRIBUTION WATER MAINS**

ATTACHMENT B – REVISIONS TO THE DOCUMENTS

1) **VOL2 OF 3 :** RIDER TO NEW YORK CITY STANDARD CONSTRUCTION CONTRACT (MARCH 2017)REGARDING CERTIFIED PAYROLLS added in QED1063AC VOL2 OF 3 Addendum11 (Page 51/304).

2) **VOL3 OF 3** : Revised JB-OC Package in QED1063AC VOL3 of 3 Addendum11
    1) JB-147 Revised : JB Item JB 350 is added
    2) JB-Page 168, 168, 170 and 171: Utility Plan Location B-1,B-2, C-1 and C-2 Added

DDC PROJECT #: **QED1063AC**
PROJECT NAME: **INSTALLATION OF DISTRIBUTION WATER MAINS**

ATTACHMENT C – REVISIONS TO PASSPORT FORMS

This Addendum initiates Round 7 of the procurement.
Please note that numbering of addenda is independent of rounds.

Questionnaire Changes:

None

Item Grid Changes:

None

CITY OF NEW YORK
DEPARTMENT OF DESIGN AND CONSTRUCTION
DIVISION OF INFRASTRUCTURE

ADDENDA CONTROL SHEET

BID SUBMISSION DATE/ TIME: Jan 15, 2025; between 8:30am and 11:00am
BID OPENING DATE/ TIME: Jan 15, 2025; 11:30am

PROJECT No.: QED1063AC

TITLE: **INSTALLATION OF DISTRIBUTION WATER MAINS**

ADDENDA ISSUED	NO. OF DWG	DATE	APPROVED BY: SPECS UNIT	GENERAL COUNSEL
#1 Questions from Bidders and Responses to Questions; Revision to PASSPort Forms	0	11/05/2025		
#2 Questions from Bidders and Responses to Questions; Revision to Documents	0	11/13/2025		
#3 Questions from Bidders and Responses to Questions; Revision to Documents	0	11/13/2025		
#4 Questions from Bidders and Responses to Questions; Revision to Documents	0	11/14/2025		
#5 Questions from Bidders and Responses to Questions; Revision to Documents	0	11/20/2025		
#6 Revision to PASSPort Forms	0	11/20/2025		
#7 Revised Bid Opening Date	0	11/24/2025		
#8 Questions from Bidders and Responses to Questions; Revision to Documents	2	11/28/2025		
#9 Questions from Bidders and Responses to Questions; Revision to Documents	0	12/03/2025		
#10 Revised Bid Opening Date	0	12/08/2025		
#11 Questions from Bidders and Responses to Questions; Revision to Documents	0	12/12/2025		

#12 Revised Bid Opening Date	0	12/22/2025		
#13 Revised Bid Opening Date	0	01/06/2025		
#14 Revision to PASSPort Forms Revision to Documents	0	01/07/2026		

THE CITY OF NEW YORK
DEPARTMENT OF DESIGN AND CONSTRUCTION
DIVISION OF INFRASTRUCTURE

01/07/2026

ADDENDUM No. # 14

FOR FURNISHING ALL LABOR AND MATERIAL NECESSARY AND REQUIRED FOR:

85026B0023-QED1063AC
INSTALLATION OF DISTRIBUTION WATER MAINS

This addendum is issued for the purpose of amending the requirements of the Bid and Contract Documents and is hereby made a part of said Bid and Contract Documents to the same extent as though it were originally included therein.

The bidder is advised that the items listed below apply to the project:

1. Bidders Questions and Responses to Questions:
No Attachment A. is included with this Addendum.

2. Revisions to Documents:
See Attachment B. is included with this Addendum.

3. Revisions to PASSPort forms:
See Attachment C. is included with this Addendum.

Transferring Data Between Rounds of an RFX: A new document titled "Transferring Data Between Rounds of an RFX" has been added to the Documents section of the View RFx tab. Please refer to this document when an addendum has been issued. Note: Whenever an addendum is issued, the RFX item grid will be cleared. You can import the work you have already done by following the steps on this document.

DDC strongly advises vendors to finalize and submit bids 48 hours prior to due date and time. The City is not responsible for technical issues (e.g. internet connection, power outages, technology malfunction, computer errors, etc.) related to bid submissions.

If additional information is required, please contact the Department of Design and Construction, Contract Section at (718) 391-1041 or by email at CSB_projectinquiries@ddc.nyc.gov.

Richard Jones, PE CWI
Chief Engineer, Executive- Engineering Services

DDC PROJECT #: **QED1063AC**

PROJECT NAME: **INSTALLATION OF DISTRIBUTION WATER MAINS**

ATTACHMENT A – BIDDERS QUESTIONS AND DDC RESPONSES

None

DDC PROJECT #: **QED1063AC**

PROJECT NAME: **INSTALLATION OF DISTRIBUTION WATER MAINS**

ATTACHMENT B – REVISIONS TO THE DOCUMENTS

1) **Updated Bid Schedule:**
   A) JB 9.28 Fixed Sum increased to $ 310,679.20

DDC PROJECT #: **QED1063AC**
PROJECT NAME: **INSTALLATION OF DISTRIBUTION WATER MAINS**

ATTACHMENT C – REVISIONS TO PASSPORT FORMS

This Addendum initiates Round 8 of the procurement.

Please note that numbering of addenda is independent of rounds.

Setup Changes:

M/WBE Requirements Changes:

Category	Earlier	Now
Black American	0%	0%
Hispanic American	0%	0%
Asian American	0%	0%
Native American	0%	0%
Women	0%	0%
Unspecified	10%	11%
Total	10%	11%

Questionnaire Changes:

None

Item Grid Changes:

None

CITY OF NEW YORK
DEPARTMENT OF DESIGN AND CONSTRUCTION
DIVISION OF INFRASTRUCTURE

ADDENDA CONTROL SHEET

BID SUBMISSION DATE/ TIME: Jan 15, 2025; between 8:30am and 11:00am
BID OPENING DATE/ TIME: Jan 15, 2025; 11:30am

PROJECT No.: QED1063AC

TITLE: **INSTALLATION OF DISTRIBUTION WATER MAINS**

ADDENDA ISSUED	NO. OF DWG	DATE	APPROVED BY: SPECS UNIT	GENERAL COUNSEL
#1 Questions from Bidders and Responses to Questions; Revision to PASSPort Forms	0	11/05/2025		
#2 Questions from Bidders and Responses to Questions; Revision to Documents	0	11/13/2025		
#3 Questions from Bidders and Responses to Questions; Revision to Documents	0	11/13/2025		
#4 Questions from Bidders and Responses to Questions; Revision to Documents	0	11/14/2025		
#5 Questions from Bidders and Responses to Questions; Revision to Documents	0	11/20/2025		
#6 Revision to PASSPort Forms	0	11/20/2025		
#7 Revised Bid Opening Date	0	11/24/2025		
#8 Questions from Bidders and Responses to Questions; Revision to Documents	2	11/28/2025		
#9 Questions from Bidders and Responses to Questions; Revision to Documents	0	12/03/2025		
#10 Revised Bid Opening Date	0	12/08/2025		
#11 Questions from Bidders and Responses to Questions; Revision to Documents	0	12/12/2025		

#12 Revised Bid Opening Date	0	12/22/2025		
#13 Revised Bid Opening Date	0	01/06/2025		
#14 Revision to PASSPort Forms Revision to Documents	0	01/07/2026		
#15 Questions from Bidders and Responses to Questions;	0	01/12/2026		

THE CITY OF NEW YORK
DEPARTMENT OF DESIGN AND CONSTRUCTION
DIVISION OF INFRASTRUCTURE

01/12/2026

ADDENDUM No. # 15

FOR FURNISHING ALL LABOR AND MATERIAL NECESSARY AND REQUIRED FOR:

85026B0023-QED1063AC
INSTALLATION OF DISTRIBUTION WATER MAINS

This addendum is issued for the purpose of amending the requirements of the Bid and Contract Documents and is hereby made a part of said Bid and Contract Documents to the same extent as though it were originally included therein.

The bidder is advised that the items listed below apply to the project:

1. Bidders Questions and Responses to Questions:
See Attachment A. is included with this Addendum.

2. Revisions to Documents:
No Attachment B. is included with this Addendum.

3. Revisions to PASSPort forms:
No Attachment C. is included with this Addendum.

Transferring Data Between Rounds of an RFX: A new document titled "Transferring Data Between Rounds of an RFX" has been added to the Documents section of the View RFx tab. Please refer to this document when an addendum has been issued. Note: Whenever an addendum is issued, the RFX item grid will be cleared. You can import the work you have already done by following the steps on this document.

DDC strongly advises vendors to finalize and submit bids 48 hours prior to due date and time. The City is not responsible for technical issues (e.g. internet connection, power outages, technology malfunction, computer errors, etc.) related to bid submissions.

If additional information is required, please contact the Department of Design and Construction, Contract Section at (718) 391-1041 or by email at CSB_projectinquiries@ddc.nyc.gov.

Richard Jones, PE CWI
Chief Engineer, Executive- Engineering Services

DDC PROJECT #: **QED1063AC**

PROJECT NAME: **INSTALLATION OF DISTRIBUTION WATER MAINS**

ATTACHMENT A – BIDDERS QUESTIONS AND DDC RESPONSES

No.	QUESTIONS	RESPONSES
1	We noticed an inconsistency with the bid schedule for QED1063AC and would like some clarification. Item in question is Sequence# 241 — Item No. **UTL-GCS-2WS(NG).** Original Bid Schedule: • Item was for fixed sum of $25,000 Addendum 2 Bid Schedule: • Item was for fixed sum of $250,000 Addendum 14 Bid Schedule: • Item is now for fixed sum of $25,000 • This change from Add2 to Add14 was not called out in the addendum 14 document. Could you please provide clarification for this item and the actual Fixed Sum Amount that DDC would like to be applied to this item?	In Addendum 2 Fixed Sum amount $250,000 for item **UTL-GCS-2WS(NG)** was included due to typing mistake. Please bid as updated Item **UTL-GCS-2WS(NG) Correct Fixed Sum** amount for item **UTL-GCS-2WS(NG) is $**25,000 as appears on QED1063AC Bid schedule 01.07.26 Add14. Please bid as it is shown on QED1063AC Bid schedule 01.07.26 Add14.

DDC PROJECT #: **QED1063AC**

PROJECT NAME: **INSTALLATION OF DISTRIBUTION WATER MAINS**

ATTACHMENT B – REVISIONS TO THE DOCUMENTS

None

DDC PROJECT #: **QED1063AC**
PROJECT NAME: **INSTALLATION OF DISTRIBUTION WATER MAINS**

ATTACHMENT C – REVISIONS TO PASSPORT FORMS

This Addendum included in Round 8 of the procurement.

Please note that numbering of addenda is independent of rounds.

Questionnaire Changes:

None

Item Grid Changes:

None

VOLUME 3 OF 3

TABLE OF CONTENTS

SECTION	DESCRIPTION
SPECIFICATIONS AND STANDARDS OF NEW YORK CITY	
SCHEDULE A	GENERAL CONDITIONS TO CONSTRUCTION CONTRACT
C-PAGES	LIST OF DRAWINGS
R – PAGES	REVISIONS TO STANDARD SPECIFICATIONS
I – PAGES	NEW SECTIONS
S – PAGES	SPECIAL PROVISIONS
SW – PAGES	SEWER AND WATER MAIN SPECIFICATIONS
EP7 - PAGES	GAS COST SHARING (EP-7) STANDARD SPECIFICATIONS
HAZ – PAGES	SUPPLEMENTAL DOCUMENTATION FOR USE WITH SPECIFICATIONS FOR HANDLING, TRANSPORTATION AND DISPOSAL OF NONHAZARDOUS AND POTENTIALLY HAZARDOUS CONTAMINATED MATERIALS
JB –OC PAGES	JOINT BID-OPEN COMPETITIVE
UI-PAGES	UTILITY INTERFERENCES SECTION

(NO TEXT ON THIS PAGE)

SPECIFICATIONS AND STANDARDS OF NEW YORK CITY

The following specifications and standards are incorporated into the Contract Documents by reference as though fully set forth herein.

1. Standard Specifications and Drawings for New York City Department of Transportation (NYCDOT) are available:
   Online at: http://www1.nyc.gov/site/ddc/resources/publications.page
   a. NYC DOT Standard Highway Specifications
   b. NYC DOT Standard Details of Construction
   Online at: https://www1.nyc.gov/html/dot/html/about/dotlibrary.shtml#spec
   c. NYC DOT Division of Street Lighting Standard Drawings
   Online at: https://www1.nyc.gov/html/dot/downloads/pdf/nycdot-street-lighting-standard-drawings.pdf
   d. NYC DOT Standard Specifications for Traffic Signals
   e. NYC DOT Standard Drawings for Traffic Signals
   For purchase between 9:00 A.M. and 3:00 P.M. Bid Window, at 55 Water St., Ground Floor, NYC, N.Y. 10041. Tel. (212) 839-9435.
   f. NYC DOT Division of Street Lighting Specifications

2. The 2010 Americans with Disabilities Act (ADA) Standards; available online at: https://www.ada.gov/regs2010/2010ADAStandards/2010ADAstandards.htm

3. The 2013 Public Rights-of-Way Accessibility Guidelines (PROWAG); available online at: https://www.access-board.gov/files/prowag/PROW-SUP-SNPRM-2013.pdf

4. Standard Specifications and Drawings for New York City Department of Environmental Protection (NYCDEP) are available online at: http://www1.nyc.gov/site/ddc/resources/publications.page
   a. NYC DEP Standard Sewer and Water Main Specifications, August 8, 2022
   b. NYC DEP Instructions to Architect/Engineers Specifications for Concrete, January 1992
   c. NYC DEP General Specification 11-Concrete, November 1991
   d. NYC DEP Sewer Design Standards, September 2025
   e. NYC DEP Water Main Standard Drawings, September 19, 2024
   f. Specifications for Trunk Main Work, July 2014
   g. Standard Green Infrastructure Specifications August 1, 2024

5. Standard Design and Guidelines for Green Infrastructure Practices, latest version, available only online at: https://www1.nyc.gov/assets/dep/downloads/pdf/water/stormwater/green-infrastructure/green-infrastructure-standard-designs.pdf

6. Standard Specifications and Drawings for New York City Fire Department Communications facilities of New York City are available online at https://www1.nyc.gov/assets/fdny/downloads/pdf/about/fdny-plant-operations-standard-drawings-specifications.pdf or for pick up from the FDNY Facilities Management Bureau, Plant Operations Engineering, 316 Sgt. Beers Avenue Cluster 1 Box 16, Fort Totten, N.Y. 11359. Contact: Mr. Ed Durkin, Tel. (718) 281-3933

7. Tree Planting Standards of the City of New York Parks & Recreation are available at the following Department of Parks & Recreation website: http://www.nycgovparks.org/pagefiles/53/Tree-Planting-Standards.pdf

8. Standards and Specifications for Utility Joint Bid work are available online at http://www1.nyc.gov/site/ddc/resources/publications.page
   a. CET SPECIFICATIONS AND SKETCHES, dated November 2010
   b. JOINT-BIDDING SPECIFICATIONS AND SKETCHES FOR MANHATTAN, Issued August 1, 2005

SCHEDULE A

GENERAL CONDITIONS TO CONSTRUCTION CONTRACT (INCLUDING GENERAL CONDITIONS RELATED TO ARTICLE 22 – INSURANCE)

PART I. REQUIRED INFORMATION

INFORMATION FOR BIDDERS SECTION 26 BID SECURITY The **Contractor** shall obtain a bid security in the amount indicated to the right.	Required provided the TOTAL BID PRICE set forth on the Bid Form is $1,000,000. or more. Certified Check: 2% of Bid Amount or Bond: 10% of Bid Amount
INFORMATION FOR BIDDERS SECTION 26 PERFORMANCE AND PAYMENT BONDS The **Contractor** shall obtain performance and payment bonds in the amount indicated to the right.	Required for contracts in the amount of $1,500,000 or more. Performance Security and Payment Security shall each be in an amount equal to 100% of the Contract Price.
INFORMATION FOR BIDDERS DEPARTMENT OF DESIGN AND CONSTRUCTION SAFETY REQUIREMENTS The **Contractor** shall provide the safety personnel as indicated to the right.	■ Project Safety Representative ☐ Dedicated, full-time Project Safety Manager
CONTRACT ARTICLE 14 DATE FOR SUBSTANTIAL COMPLETION The **Contractor** shall substantially complete the **Work** in the number of calendar days indicated to the right.	See Page SA-4
CONTRACT ARTICLE 15 LIQUIDATED DAMAGES If the **Contractor** fails to substantially complete the **Work** within the time fixed for substantial completion plus authorized time extensions or if the **Contractor**, in the sole determination of the **Commissioner**, has abandoned the **Work**, the **Contractor** shall pay to the **City** the amount indicated to the right.	$11,000.00 for each consecutive calendar day over substantial completion time
CONTRACT ARTICLE 17. SUB-CONTRACTOR The **Contractor** shall not make subcontracts totaling an amount more than the percentage of the total **Contract** price indicated to the right.	Not to exceed 35 % of the **Contract** price

CONTRACT ARTICLE 21. **RETAINAGE** The **Commissioner** shall deduct and retain until the substantial completion of the **Work** the percent value of the **Work** indicated to the right.	5 % of the value of the **Work**
CONTRACT ARTICLE 22. **(Per Directions Below)**	See pages SA-5 through SA-12
CONTRACT ARTICLE 24. **DEPOSIT GUARANTEE** As security for the faithful performance of its obligations, the **Contractor**, upon filing its requisition for payment on **Substantial Completion**, shall deposit with the **Commissioner** a sum equal to the percentage of the **Contract** price indicated to the right.	1% of **Contract** price
CONTRACT ARTICLE 24. **PERIOD OF GUARANTEE** Periods of maintenance and guarantee other than the period set forth in Article 24.1 are indicated to the right.	Eighteen (18) Months, excluding Trees and Plants Twenty-four (24) Months for Trees and Plants
CONTRACT ARTICLE 75. **COMPENSATION TO BE PAID TO CONTRACTOR** The **City** shall pay and the **Contractor** shall accept in full consideration for the performance of the **Contract**, subject to additions and deductions as provided herein**,** the total sum **shown in the column to the right,** being the amount at which the **Contract** was awarded to the **Contractor** at a public letting thereof, based upon the **Contractor's** bid for the **Contract.**	Amount for which the **Contract** was Awarded: _____ _____ Dollars ($_____)
CONTRACT ARTICLE 79. **PARTICIPATION BY MINORITY-OWNED AND WOMEN-OWNED BUSINESS ENTERPRISES IN CITY PROCUREMENT**	See M/WBE Utilization Plan in the PASSPort Procurement M/WBE Considerations Section.

STANDARD HIGHWAY SPECIFICATIONS SECTION 6.40 LIQUIDATED DAMAGES FOR ENGINEER'S FIELD OFFICE If the Contractor fails to satisfactorily provide the field office and all equipment specified in **Section 6.40 - Engineer's Field Office**, and/or if a cited deficiency exceed seventy two (72) hours after notice from the Engineer in writing, or is permitted to recur, liquidated damages will be assessed in the amount specified herein for each subsequent calendar day or part thereof that a cited deficiency resulting in nonpayment, as described in **Section 6.40.5**, is not corrected.	$ 800.00 for each calendar day of deficiency
STANDARD HIGHWAY SPECIFICATIONS SECTION 6.70 LIQUIDATED DAMAGES FOR MAINTENANCE AND PROTECTION OF TRAFFIC	$ 400.00 for each instance of failure to comply with the Maintenance and Protection of Traffic requirements within three (3) hours after written notice from the Engineer. $ 800.00 for each and every hour of failing to open the entire width of roadway to traffic the morning following a night/weekend work operation.
STANDARD HIGHWAY SPECIFICATIONS SECTION 7.13 LIQUIDATED DAMAGES FOR MAINTENANCE OF SITE If the Contractor fails to comply, within three (3) consecutive hours after written notice from the Engineer, with the requirements of **Section 7.13 - Maintenance of Site**, the Contractor shall pay to the City of New York, until such notice has been complied with or rescinded, the sum specified above per calendar day, for each instance of such failure, as liquidated damages and not as a penalty, for such default.	$ 2,200.00 for each calendar day, for each occurrence

Date for Substantial Completion (Reference: Article 14)

The Contractor shall substantially complete the Work within the Final Contract Duration determined in accordance with the terms and conditions set forth herein.

The Base Contract Duration for this project is _____730_____consecutive calendar days ("ccds").

The Final Contract Duration shall be the Base Contract Duration when a check mark is indicated before the word "NO", below, and shall be the Base Contract Duration adjusted by the table set forth below when a check mark is indicated before the word "YES", below.

___√___ YES _____ NO

When the Final Contract Duration is indicated above to be adjusted by the table below, the table may increase the Base Contract Duration depending on the date of scheduled substantial completion to avoid a scheduled substantial completion of the Work during the winter months. The date of scheduled substantial completion shall be determined by adding the Base Contract Duration to the date specified to commence work in the written Notice to Proceed. The Final Contract Duration shall then be determined as follows:

(a) Find the row that corresponds to the month of substantial completion based on the Base Contract Duration added to the date specified to commence work in the written Notice to Proceed.

(b) Find the number of days to be added to the Base Contract Duration in the table below. Add that number of days to the Base Contract Duration to obtain the Final Contract Duration in consecutive calendar days.

Month of Substantial Completion based on the Base Contract Duration	Number of Days of adjustment
January	150
February	120
March	90
April	60
May	30
June	0
July	0
August	0
September	0
October	0
November –December 15	0
December 16 – December 31	180

In addition, should Item No. 9.30, "Storm Water Pollution Prevention," exist in the Contract and the Commissioner determines that the required Storm Water Pollution Prevention Plan (SWPPP) does not conform to NYSDEC's recommended Standards, an additional 60 ccd will be added to the above Final Contract Duration, at the sole discretion of the Commissioner.

(GENERAL CONDITIONS RELATING TO ARTICLE 22 – INSURANCE)

PART II. TYPES OF INSURANCE, MINIMUM LIMITS AND SPECIAL CONDITIONS

Note: All certificate(s) of insurance submitted pursuant to Contract Article 22.3. 3 must be accompanied by a Certification by Broker consistent with Part III below and include the following information:

- **For each insurance policy, the name and NAIC number of issuing company, number of policy, and effective dates;**
- **Policy limits consistent with the requirements listed below;**
- **Additional insureds or loss payees consistent with the requirements listed below; and**
- **The number assigned to the Contract by the City (in the "Description of Operations" field).**

Insurance indicated by a blackened box (■) or by X in a □ to left will be required under this contract

Types of Insurance (per Article 22 in its entirety, including listed paragraph)	Minimum Limits and Special Conditions
■ Commercial General Liability Art. 22.1.1	The minimum limits shall be $ 3,000,000 per occurrence and $ 6,000,000 per project aggregate applicable to this Contract. Additional Insureds: 1. City of New York, including its officials and employees, with coverage at least as broad as ISO Form CG 20 10 and CG 20 37, 2. All person(s) or organization(s), if any, that Article 22.1.1(b) of the Contract requires to be named as Additional Insured(s), with coverage at least as broad as ISO Form CG 20 26. The Additional Insured endorsement shall either specify the entity's name, if known, or the entity's title (e.g., Project Manager), 3. The Consolidated Edison Company of New York, Inc. ("Coned") 4. Crown Castle USA ("Crown Castle") 5. Charter Communications, Inc, ("Charter Spectrum") 6. Empire City Subway Company, LTD ("ECS") 7. Verizon New York Inc. ("Verizon") 8. National Grid USA ("National Grid") 9. Altice USA, Inc. ("Altice")

■ Workers' Compensation Art. 22.1.2 ■ Disability Benefits Insurance Art. 22.1.2 ■ Employers' Liability Art. 22.1.2 ☐ Jones Act Art. 22.1.3 ☐ U.S. Longshoremen's and Harbor Workers Compensation Act Art. 22.1.3	Workers' Compensation, Employers' Liability, and Disability Benefits Insurance: Statutory per New York State law without regard to jurisdiction. **Note:** The following forms are acceptable: (1) New York State Workers' Compensation Board Form No. C-105.2, (2) State Insurance Fund Form No. U-26.3, (3) New York State Workers' Compensation Board Form No. DB-120.1 and (4) Request for WC/DB Exemption Form No. CE-200. The City will not accept an ACORD form as proof of Workers' Compensation or Disability Insurance. Jones Act and U.S. Longshoremen's and Harbor Workers' Compensation Act: Statutory per U.S. Law. ☐ Additional Requirements: (1) NYCTA "OUTSIDE CONTRACT" INSURANCE REQUIREMENTS: Workers' Compensation Insurance (including Employer's Liability Insurance) with limits of not less than $2,000,000, which limit may be met by a combination of primary and excess insurance meeting the statutory limits of New York State. (2) Two (2) certificates of such insurance shall be furnished to the Director, Risk Management, MTA Risk and Insurance Management Standards, Enforcement and Claims Unit, 2 Broadway, 21st Floor, New York, NY 10004.
☐ Builders' Risk Art. 22.1.4	☐ Required: 100% of total bid amount ☐ Required: 100 % of total bid amount for Item(s): **Contractor** the Named Insured; the **City** both an Additional Insured and one of the loss payees as its interests may appear. Installation Floater not permitted. Note: Builders Risk Insurance may terminate upon **Substantial Completion** of the **Work** in its entirety.

■ Commercial Auto Liability Art. 22.1.5	$ 2,000,000 per accident combined single limit If vehicles are used for transporting hazardous materials, the **Contractor** shall provide pollution liability broadened coverage for covered vehicles (endorsement CA 99 48) as well as proof of MCS 90 Additional Insureds:
□Contractors Pollution Liability Art. 22.1.6	$_5,000,000_ per occurrence $_5,000,000_ aggregate Additional Insureds: 1. City of New York, including its officials and employees, and 2. _____ 3. _____
□ Marine Protection and Indemnity Art. 22.1.7(a)	$_____ each occurrence $_____ aggregate Additional Insureds: 1. City of New York, including its officials and employees, and 2. _____ 3. _____
□ Hull and Machinery Insurance Art. 22.1.7(b)	$_____ per occurrence $_____ aggregate Additional Insureds: 1. City of New York, including its officials and employees, and 2. _____ 3. _____

☐ Marine Pollution Liability Art. 22.1.7(c)	$ 1,000,000 per occurrence $ 1,000,000 aggregate Additional Insureds: 1. City of New York, including its officials and employees, and 2. _____ 3. _____
[OTHER] Art. 22.1.8 ☐ Railroad Protection Liability Policy (ISO-RIMA or equivalent form) approved by Permittor covering the work to be performed at the designated site and affording protection for damages arising out of bodily injury or death, physical damage to or destruction of property, including damage to the Insured's own property and conforming to the following: • Policy Endorsement CG 28 31 - Pollution Exclusion Amendment is required to be endorsed onto the policy when environmental-related work and/or exposures exist. • Indicate the Name and address of the Contractor to perform the work, the Contract # and the name of the railroad property where the work is being performed and the Agency Permit. • Evidence of Railroad Protective Liability Insurance, must be provided in the form of the Original Policy. A detailed Insurance Binder (ACORD or Manuscript Form) will be accepted pending issuance of the Original Policy, which must be provided within 30 days of the Binder Approval.	$ 2,000,000 per occurrence $ 6,000,000 annual aggregate Named Insureds: 1. The New York City Transit Authority ("NYCT"), the Manhattan and Bronx Surface Transit Operating Authority ("MaBSTOA"), the Staten Island Rapid Transit Operating Authority ("SIRTOA"), the Metropolitan Transportation Authority ("MTA") including its subsidiaries and affiliates, MTA Construction & Development Company ("MTA C&D"), MTA Bus Company ("MTA Bus").

[OTHER] Art. 22.1.8

■Professional Liability

A. The Contractor's Professional Engineer shall maintain and submit evidence of Professional Liability Insurance in the minimum amount of $1,000,000 per claim. The policy or policies shall include an endorsement to cover the liability assumed by the Contractor under this Contract arising out of the negligent performance of professional services or caused by an error, omission or negligent act of the Contractor's Professional Engineer or anyone employed by the Contractor's Professional Engineer.

B. Claims-made policies will be accepted for Professional Liability Insurance. All such policies shall have an extended reporting period option or automatic coverage of not less than two (2) years. If available as an option, the Contractor's Professional Engineer shall purchase extended reporting period coverage effective on cancellation or termination of such insurance unless a new policy is secured with a retroactive date, including at least the last policy year.

[OTHER] Art. 22.1.8 ■ Engineer's Field Office **Section 6.40, Standard Highway Specifications**	Fire insurance, extended coverage and vandalism, malicious mischief and burglary, and theft insurance coverage in the amount of $40,000

[OTHER] Art. 22.1.8

☐ The Following Additional Insurance Must Be Provided:

Umbrella/Excess Liability Insurance - The Contractor shall provide Umbrella/Excess Liability Insurance in the minimum amount of $10,000,000 per Occurrence and $10,000,000 in Aggregate. The policy terms and condition should be at least as broad as the underlying policies. The underlying policies should comply with the insurance provision as outlined by the contract. Defense cost should be in addition to the limit of liability. The City of New York, including its officials and employees, should be included as additional insured as respects to the noted project.

SCHEDULE A
(GENERAL CONDITIONS TO CONSTRUCTION CONTRACT)
(GENERAL CONDITIONS RELATING TO ARTICLE 22 – INSURANCE)

PART III. CERTIFICATES OF INSURANCE

All certificates of insurance (except certificates of insurance solely evidencing Workers' Compensation Insurance, Employer's Liability Insurance, and/or Disability Benefits Insurance) must be accompanied by one of the following:

(1) the Certification by Insurance Broker or Agent on the following page setting forth the required information and signatures;

-- OR --

(2) copies of all policies as certified by an authorized representative of the issuing insurance carrier that are referenced in such certificate of insurance. If any policy is not available at the time of submission, certified binders may be submitted until such time as the policy is available, at which time a certified copy of the policy shall be submitted.

CITY OF NEW YORK

CERTIFICATION BY INSURANCE BROKER OR AGENT

The undersigned insurance broker represents to the City of New York that the attached Certificate of Insurance is accurate in all material respects.

_____
[Name of broker or agent (typewritten)]

_____
[Address of broker or agent (typewritten)]

_____
[Email address of broker or agent (typewritten)]

_____
[Phone number/Fax number of broker or agent (typewritten)]

_____
[Signature of authorized official, broker, or agent]

_____
[Name and title of authorized official, broker, or agent (typewritten)]

State of …….)
) ss.:
County of ……)

Sworn to before me this _____ day of _____, 20____

_____
NOTARY PUBLIC FOR THE STATE OF _____

SCHEDULE A

(GENERAL CONDITIONS TO CONSTRUCTION CONTRACT)

PART IV. ADDRESS OF COMMISSIONER

Wherever reference is made in Article 7 or Article 22 to documents to be sent to the **Commissioner** (e.g., notices, filings, or submissions), such documents must be sent through email to insurance@ddc.nyc.gov. Hard copy documents of the above requirement are no longer required.

(NO FURTHER TEXT ON THIS PAGE)

C. DRAWINGS

Contract Drawings

DRAWING NO.	DESCRIPTION
TS1	TITLE SHEET
TOC1	TABLE OF CONTENTS
LP1	KEY PLAN
LA1	LEGEND AND ABBREVIATIONS
GN1	GENERAL NOTES - 1
GN2	GENERAL NOTES - 2
GN3	GENERAL NOTES – W.S. DESIGN
GN4	GENERAL NOTES - TA
SC1-SC9	SURVEY CONTROL
TD1	TYPICAL DETAILS
TD2	TROLLEY TRACKS AND YOKE REMOVAL DETAILS
UP1	UTILITY PLAN LOCATION A – 1 – MADISON STREET, ONDERDONK AVENUE
UP2	UTILITY PLAN LOCATION A – 2 – MADISON STREET, SENECA AVE
UP3	UTILITY PLAN LOCATION B – 1 – EAST FORDHAM ROAD, BAINBRIDGE AVENUE, COLES LANE, POE PLACE
UP4	UTILITY PLAN LOCATION B – 2 – EAST 193RD STREET, EAST 194TH STREET, BAINBRIDGE AVENUE, MARION AVENUE
UP5	UTILITY PLAN LOCATION C – 1 – GRACE AVENUE, EDSON AVENUE, PITMAN AVENUE
UP6	UTILITY PLAN LOCATION C – 2 – GRACE AVENUE, EDSON AVENUE, BUSSING AVENUE
UP7	UTILITY PLAN LOCATION D – 1 – BAISLEY BOULEVARD, SUNBURY ROAD, MERRICK BOULEVARD
UP8	UTILITY PLAN LOCATION D – 2 – URSINA ROAD, 125TH AVENUE, LESLIE ROAD, MERRICK BOULEVARD

DRAWING NO.	DESCRIPTION
UP9	UTILITY PLAN LOCATION D – 3 – IRWIN PLACE, 120TH AVENUE, ROE ROAD, SUNBURY ROAD
UP10	UTILITY PLAN LOCATION E – 1 – AVERY AVENUE
UP11	UTILITY PLAN LOCATION E – 2 – COLLEGE POINT BOULEVARD, POPLE AVENUE, AVERY AVENUE
UP12	UTILITY PLAN LOCATION E – 3 – FULLER PLACE, HAIGHT STREET, COLLEGE POINT BOULEVARD, SANFORD AVENUE, MAPLE AVENUE
UP13	UTILITY PLAN LOCATION E – 4 – COLLEGE POINT BOULEVARD, 41ST AVENUE, 41ST ROAD
UP14	UTILITY PLAN LOCATION E – 5 – DELONG STREET, 41ST AVENUE, SANDFORD AVENUE
UP15	UTILITY PLAN LOCATION F – 1 - FARMERS BOULEVARD, 111TH ROAD
UP16	UTILITY PLAN LOCATION F – 2 -194TH STREET, 196TH STREET, 111TH AVENUE, 111TH ROAD
UP17	UTILITY PLAN LOCATION F – 3 – FARMERS BOULEVARD, 112TH AVENUE, 112TH ROAD
UP18	UTILITY PLAN LOCATION F – 4 – 194TH STREET, 196TH STREET, 112TH AVENUE, 112TH ROAD
PR1-PR5	PEDESTRIAN RAMP SUMMARY TABLE
TM1-TM28	TREE MITIGATION PLANS
MPT1-MPT23	MAINTENANCE AND PROTECTION OF TRAFFIC
LP1	LANDMARK PRESERVATION COMMISSION PLANS
ESC1-ESC60	EROSION SEDIMENT CONTROL PLANS
JB-U1	JOINT BID GENERAL NOTES AND CONDITIONS FOR UTILITY WORK
JB-U2 - JB-U44	CONSOLIDATED EDISON JOINT BID DRAWINGS
JBU-45 - JB-U68	VERIZON/ECS JOINT BID DRAWINGS
JB-U69	CHARTER SPECTRUM JOINT BID DRAWINGS

R - PAGES

REVISIONS TO STANDARD SPECIFICATIONS

NOTICE

The Specification Bulletin(s) ("SB(s)") referenced in this Section (R-Pages) may consist of revisions to the following Standard Specifications:

- New York City Department of Transportation ("NYC DOT") Standard Highway Specifications, dated 5/16/2022;
- New York City Department of Environmental Protection ("NYC DEP") Standard Sewer and Water Main Specifications, dated 8/8/2022;
- NYC Department of Environmental Protection ("NYC DEP") Standard Green Infrastructure Specifications, dated 8/1/2024; and
- NYC DEP Specifications for Trunk Main Work, dated 7/2014.

The SB(s) modify and supersede portions of the applicable Standard Specifications. The provisions contained in this Contract's I-Pages, S-Pages and SW-Pages may further modify the applicable Standard Specifications.

The following active SB(s) are included as part of this contract:

- *SB 22-006 – INCREMENTAL COST NEAR TRANSIT FACILITIES*
- *SB 23-001 – SEWER DESIGN STANDARDS*
- *SB 23-002 – PIPE BOLLARD*
- *SB 23-003 – MOBILIZATION*
- *SB 23-004 – SUSTAINABLE CONSTRUCTION*
- *SB 24-001 – CEMENT, PORTLAND*
- *SB 24-002 – SHEETING AND BRACING*
- *SB 24-003 – CORNER CURB*
- *SB 24-004 – PIGMENTING*
- *SB 24-006 – REINFORCED CONCRETE SEWERS*
- *SB 24-007 – DRAINS TO BE KEPT CLEAN*
- *SB 24-008 – PAYMENT REQUISITIONS*
- *SB 24-010 – FLAGGERS, CROSSING GUARDS, AND PEDESTRIAN MANAGERS*

- *SB 24-011 – ALLOWANCE FOR RAILROAD FACILITY PERMITTING (ALL TYPES)*
- *SB 24-012 – ASPHALT, FUEL, AND STEEL PRICE ADJUSTMENT*
- *SB 24-013 – ENGINEER'S FIELD OFFICE*
- *SB 24-014 – MAINTENANCE OF SITE*
- *SB 24-015 – SUSTAINABLE CONSTRUCTION REQUIREMENTS*
- *SB 24-016 – HANDLING, TRANSPORTING, AND DISPOSAL OF POTENTIAL AND IDENTIFIED CONTAMINATED AND HAZARDOUS MATERIALS*
- *SB 24-017 – EXPANDED WORK ALLOWANCE*
- *SB 24-018 – STORMWATER POLLUTION PREVENTION*
- *SB 24-019 – MOBILIZATION*
- *SB 24-020 – PARTIAL PAYMMENTS FOR MATERIALS IN ADVANCE OF THEIR INCORPORATION IN THE WORK*
- *SB 25-001 – HELICAL PILES (GROUT-FILLED CORE)*
- *SB 25-002 – WATER MAIN LOCK-OUT / TAG-OUT (LOTO)*
- *SB 25-003 – PROJECT SIGN*
- *SB 25-004 – TREE CONSULTANT*
- *SB 25-005 – MAINTENANCE OF SITE*
- *SB 25-006 –SPECIAL MODIFICATION OF WORK FOR INSTALLATION OF NEW CURB AND SIDEWALKS*
- *SB 25-007 – CURING MATERIALS*
- *SB 25-008 – TEMPORARY RESTORATION AND CLEANING UP*
- *SB 25-009 – SEWER DESIGN STANDARDS*
- *SB 25-010 – SAWCUTTING EXISTING PAVEMENT*

The SB(s) are available online at:
http://www1.nyc.gov/site/ddc/resources/specification-bulletins.page

(NO FURTHER TEXT ON THIS PAGE)

.

I - Pages

NEW SECTIONS

NOTICE

UNLESS OTHERWISE NOTED, ALL SECTIONS, SUBSECTIONS, ARTICLES, OR SUBARTICLES AS REFERRED TO HEREIN WITHIN THESE NEW SECTION SPECIFICATIONS MUST BE THOSE OF THE NEW YORK CITY DEPARTMENT OF TRANSPORTATION'S (NYCDOT'S) CURRENT STANDARD HIGHWAY SPECIFICATIONS WITH CURRENT ADDITIONS, MODIFICATIONS AND REVISIONS TO THE STANDARD HIGHWAY SPECIFICATIONS (R-PAGES).

THE STANDARD HIGHWAY SPECIFICATIONS ARE NOT INCLUDED IN THESE I-PAGES. SEE THE NYCDOT STANDARD HIGHWAY SPECIFICATIONS BOOKS FOR STANDARD SPECIFICATIONS TEXTS.

(NO TEXT ON THIS PAGE)

TABLE OF CONTENTS

SECTION	DESCRIPTION	PAGE NO.
1.06.23(S)	TRUCKING	I-2
2.29	WARM MIX TECHNOLOGIES	I-3
3.09	ASPHALT PAVING MIXTURES (BALANCED MIX DESIGN)	I-4
7.07 A	REMOVING EXISTING STEEL BOLLARDS	I-9
7.35	PEDESTRIAN CHANNELIZER	I-10
7.70 TPR	TEMPORARY PEDESTRIAN RAMP	I-12
HW-900H	ALLOWANCE FOR CITY WORK ACCELERATION	I-14

1.06.23.(S). – TRUCKING

All third-party trucking hired by the prime contractor or any tier subcontractor must be submitted as a Request for Subcontractor Approval (RFAS) as a subcontractor with the following exceptions:

1) For materials delivered by a supplier;
2) For pick-up and delivery of containers and/or dumpsters not used for soils.

SECTION 2.29 – Warm Mix Technologies

2.29.1. This section describes warm mix technologies for use in the construction of Performance Based Asphalt Paving Mixtures. Warm mix technologies are systems that enable the production of asphalt pavements at lower temperatures than traditional Hot Mix Asphalt (HMA), or are used to enhance compaction of HMA.

2.29.2. GENERAL REQUIREMENTS

Warm Mix technologies must be on one of the current NYSDOT Approved Lists for Warm Mix Asphalt Technologies (lists 712-1010, 712-1020, or 712-1030).

Use of warm mix additives shall be used in accordance with the manufacturer's published recommendations.

2.29.3. PLANT AND EQUIPMENT

All plant and equipment for warm mix technologies must be installed in accordance with the manufacturer's recommendations. Prior to using the warm mix technologies, the plant and equipment installation shall be approved in writing by a manufacturer's technical representative and the Director of QA.

All references to **Section 3.01** are hereby replaced with the following new **Section 3.09**.

SECTION 3.09 – Asphalt Paving Mixtures (Balanced Mix Design)

3.09.1. INTENT.

This section describes Balanced Mix Design Asphalt Paving Mixtures.

3.09.2. CLASSES AND TYPES.

(A) Balanced Mix Design Asphalt Paving Mixtures must be of the following kinds:

- Balanced Mix Design Binder Mixture, 1" Nominal Maximum Aggregate Size (NMAS)
- Balanced Mix Design Top Mixture, 1/2" NMAS

(B) Kind of mixture must be as specified.

3.09.3. MATERIAL.

Balanced Mix Design Asphalt Paving Mixtures will be composed of virgin aggregate, virgin asphaltic cement, rejuvenating agent, warm mix technologies and / or recycled asphalt pavement (RAP).

(A) GENERAL.

The Contractor must obtain Department approval of all material sources before any mixture is mixed at any asphalt plants. Approval of sources for the supply of the coarse and fine mineral aggregates must be obtained from the NYCDDC Director of Quality Assurance (QA).

All laboratories, asphalt mix designs, and asphalt plants proposed by the Contractor must be subject to approval by QA and in accordance with their "Mix Design, Laboratory and Plant Acceptance Protocol". Copies of this protocol may be obtained at the pre-construction meeting or from the Engineer. The minimum requirement for approval of the proposed plant is that it must be on the current New York State Department of Transportation (NYSDOT) approved list.

(B) VIRGIN AGGREGATES.

Virgin aggregates must meet the requirements of Section 2.02.

(C) VIRGIN ASPHALTIC CEMENT.

Virgin asphaltic cement must meet the requirements of Section 2.05.

(D) REJUVENATING AGENT.

Rejuvenating agent must meet the requirements of Section 2.28.

(E) WARM MIX TECHNOLOGIES.

Warm mix technologies must meet the requirements of Section 2.29.

(F) RECYCLED ASPHALT PAVEMENT.

Recycled asphalt pavement must meet the requirements of section 2.30.

3.09.4. CONTRACTOR'S MIX DESIGN.

(A) MIX DESIGN.

The Contractor must formulate and submit mix designs for Balanced Mix Design Asphalt Paving Mixtures, and submit them in writing to the Engineer. The mix designs must be submitted on forms in accordance with the QA "Mix Design, Laboratory and Plant Acceptance Protocol". Mix designs must be prepared and submitted to the Engineer for approval a minimum of four (4) weeks prior to the scheduled start of paving work.

The approved formula must not be changed without the written permission of QA.

The contractor must develop a Job Mix Formula (JMF) through a four-step process consisting of:

1) selecting appropriate materials,
2) developing a design aggregate structure,
3) evaluating the resultant mixture's conformance to specified Performance Requirements, and
4) determining the acceptable range of total mixture asphalt content.

Mix designs must be 4-point designs with constant aggregate proportions, constant RAP proportions, and varied amounts of virgin asphaltic cement and/or rejuvenating agent. The design points must be selected so that the total mixture asphalt content ($\%AC_{mix}$) is evenly spaced. The overall range of $\%AC_{mix}$ covered

by the design points must be large enough that they contain one failing rutting test (Hamburg or IDT) and one failing cracking test (FI or CT Index) or have an overall range of 2% $\%AC_{mix}$, whichever is smaller.

$\%AC_{mix}$ as calculated and shown in the mix design will include the rejuvenator and all of the RAP AC.
Subject to approval by the Director of QA, a mix design may be resubmitted for renewal without performing a new 4-point design, provided the following requirements are met:

i. The mix design has been in continuous production (no gaps greater than 6 months) since its initial approval;
ii. The plant layout has not been modified (including replacement of major equipment);
iii. All periodic Performance Testing per Subsection 3.09.4.(C) is within tolerance, and did not require any retests.
iv. The performance of the mix design is acceptable to the Director of QA.

The mix design procedure must be as follows:

i. Identify all material sources.
ii. Determine gradation and asphalt content of RAP stockpiles per **Section 2.30.4**.
iii. Determine aggregate bulk specific gravity (G_{sb}) and apparent specific gravity (G_{sa}) of all virgin and RAP aggregates per ASTM C127 and C128.
iv. Select grade of virgin asphalt binder and/or rejuvenating agent to be used.
v. Select blend of virgin aggregates RAP, virgin asphalt cement, and rejuvenator to meet the requirements of Subsection 3.09.4.(B), Control Requirements.
vi. Select the AC content for the trial batches.
vii. Determine mixing and compaction temperatures, per NYSDOT MM5.16, Table 7.
viii. Prepare samples in the laboratory for testing per ASTM D6925, with the following supplemental requirements:
    a. Samples for Performance Testing must be prepared per 3.09.4.(C) below.
ix. Perform tests per Subsection 3.09.4.(C) and Subsection 3.09.4.(D) to verify mix design performance and establish production tolerances.
x. Submit acceptable mix design to the Director of QA for approval.

(B) CONTROL REQUIREMENTS.

1. AGGREGATE GRADATION. The JMF submitted must meet all of the control points in NYSDOT Materials Method 5.16, Table 1. The JMF must show the target design gradation at the sieve sizes shown in NYSDOT MP 401 Table 1. All aggregate gradation percentages are based on the total dry weight of the aggregate.

2. TARGET DESIGN ASPHALT CONTENT. The JMF submitted must list the target design total mixture asphalt content $\%AC_{mix}$, the minimum design total mixture asphalt content $\%AC_{min}$, and the maximum total mixture asphalt content $\%AC_{max}$.
The target design total mixture asphalt content $\%AC_{mix}$ will be selected as follows:

i. A plot will be generated for each of the performance tests, with $\%AC_{mix}$ on the X axis and the performance value on the Y axis, and a linear trendline generated.
ii. The range of $\%AC_{mix}$ that produces passing performance tests (where the trendline meets the performance criteria) will be identified for each performance test. The $\%AC_{mix}$ passing performance range must be rounded to the 0.1% in the direction that produces the most conservative result (a smaller range of acceptable $\%AC_{mix}$).
iii. The ranges for each of the performance tests will be overlayed, and a combined range that produces passing results for all tests will be determined.
iv. The middle of this combined range will be the target $\%AC_{mix}$.

3. TARGET VOLUMETRIC PROPERTIES. The JMF submitted must show the following target volumetric properties:

i. Voids in Mineral Aggerate (VMA)
ii. Voids Filled with Bitumen (VFB).

These properties must be calculated as described in Subsection 3.09.4.(D). If the target design asphalt content $\%AC_{mix}$ is interpolated between trial values, the JMF volumetric properties must be similarly interpolated.

(C) PERFORMANCE REQUIREMENTS

1. PERFORMANCE TESTING CRITERIA. The mix must be designed to meet the performance testing criteria in Table 3.09-1.

TABLE 3.09-I - PERFORMANCE TESTING CRITERIA

Test Methods	Criteria	Min. Design Value	Max. COV[1]
RUTTING TESTS			
AASHTO T324 Hamburg Wheel-Track Test	Rut Depth	12.5 mm	N/A
ASTM D6931 Indirect Tensile Strength (IDT) Test	IDT Strength	30 psi	≤15
CRACKING TESTS			
AASHTO T 393 SCB Flexibility Index (FI) Test	Flexibility Index	8	≤40
ASTM D8225 CT Index Test	CT Index	135	≤25

Note 1: COV = Coefficient of Variation, defined per ASTM E177.

Specimens must be batched and compacted per NYSDOT MM5.16 Section VI.C, and Table 3.09-II below. **TABLE 3.09-II - SUMMARY OF TESTING CRITERIA FOR BALANCED MIX ASPHALT**

		Hamburg Wheel-Track	**IDT**	**CT Index**	**SCB FI**
Test Location		Laboratory	Plant	Plant	Plant
Test Method		AASHTO T324	ASTM D6931 NCHRP 9-33 Report	ASTM D8225	AASHTO T393
No. of Samples		Initial: 2 wheel tests (4 plugs) Periodic verification: 1 wheel test (2 plugs)	3	3	3
Cycles		20,000	N/A	N/A	N/A
Load Rate (mm/min)		N/A	50±5	50±2	50±2
Height (mm)		62±2	95±5	½" NMAS = 62±1 1" NMAS = 95±1	50±1
Notch Dimensions (mm)		N/A	N/A	N/A	<2.25 wide 15±1 deep
Aging	Lab mixed	2 hours loose mix volumetric Conditioning at Compaction Temperature			
	Plant mixed	Reheat loose mix to Compaction Temperature and Compact Specimens			
HMA Compaction Temp, °C		V Grade = 149°C ± 3°C E Grade = 163°C ± 3°C			
WMA Compaction Temp, °C		V Grade = 132°C ± 3°C E Grade = 146°C ± 3°C			
Air Voids, %		7 ± 0.5	7 ± 0.5	7 ± 0.5	7 ± 0.5
Test Temp, °C		45°C ± 1.0	44°C ± 1.0	25°C ± 1.0	25°C ± 1.0
Water Bath Conditioning		50°C for 45 min.	44°C for 2 hrs ± 10 min.	25°C for 2 hrs ± 10 min.	25°C for 2 hrs ± 10 min

(D) PRODUCTION TOLERANCES

The tolerances in Table 3.09-III are applied to the JMF in the approved mix design.

TABLE 3.09-III - VOLUMETRICS PRODUCTION TOLERANCES

Test	Tolerance applied to the JMF in the approved mix design
Aggregate Gradation, ASTM D5444 *(Note 1)*	NYSDOT MP 401 Table 1, except the Control Points in NYSDOT MM 5.16 Table 1 must not be exceeded.
Asphalt $\%AC_{mix}$, ASTM D6307 *(Note 1)*	±0.1% applied to the JMF
Air voids P_a, ASTM D3203 *(Notes 2, 3)*	4.0% ±1.0%
VMA, ASTM D6995 *(Notes 2, 3)*	NYSDOT MP 401 Table 7
VFB *(Notes 2, 3, 4)*	NYSDOT MP 401 Table 7

Note 1: Determined by batched weight for mix design tests.

Note 2: Samples must be prepared by Superpave Gyratory Compactor per ASTM D6825, compacted to N_{design} of 75 gyrations.

Note 3: Maximum (G_{mm}) and Bulk (G_{mb}) specific gravity samples used for these tests must meet the tolerances in NYSDOT MP 401, Table 5.

Note 4: VFB is calculated per Appendix 1 to NYSDOT MM 5.16.

3.09.5. ASPHALT PLANT REQUIREMENTS.

(A) QUALITY CONTROL.

1. DAILY QC LOT TESTING.

The asphalt plant must perform ongoing QC lot testing during production. Test reports must be kept of all QC test results. Test reports must include the technician's name and approval (signed and dated) by the plant's QC manager. The QC manager must review and approve test reports on a daily basis. If test reports are kept electronically, a scanned PDF of the signed test reports are acceptable; test reports stored solely in computer spreadsheets are not acceptable. The Quality Control sampling and testing called for in NYSDOT MP 401 Table 4 is required, except that references to the RME refer to the Director of QA.

2. PERIODIC PERFORMANCE TESTING.

The asphalt plant must perform periodic performance testing. Periodic performance testing will be required at the frequency shown in Table 3.09-IV, and after all plant shutdowns and major maintenance. Periodic performance testing must be per Subsection 3.09.4.(C). The plant may choose which of the cracking tests to perform for periodic performance testing, unless directed in advance by the Director of QA. The cracking test used for periodic testing may not be changed without prior written approval of the Director of QA. Results of all periodic performance testing must be submitted to the Director of QA for approval.

TABLE 3.09-IV
PERIODIC PERFORMANCE TESTING FREQUENCY

Mix Design RAP%	Periodic Testing Frequency		
	Cracking (SCB FI, ***or*** CT Index)	Rutting (IDT)	Rutting (Hamburg)
RAP% ≤ 40%	Weekly	Weekly	6 months
40% < RAP%	Every third day	Every third day	3 months

(B) QUALITY ASSURANCE SAMPLES.

In addition to the requirements of Section 5.07, when requested by the Director of QA, the Contractor must deliver to QA bagged asphalt and / or compacted asphalt samples (Superpave gyratory compactor samples) in sufficient quantity to perform the testing in Subsection 3.09.5.(A).

The Marshall flow and stability tests called for in Section 5.07.2 are replaced by the cracking test specified in Section 3.09.5.(A).2 above.

(C) MAINTENANCE.

The asphalt plant must be maintained in proper working order. Plant scales must be checked quarterly, and adjusted if necessary. The Director of QA must be notified in writing two weeks prior to scale checks, scheduled plant shutdowns, scheduled major maintenance, and plant openings after shutdowns or major maintenance.

3.09.6. HANDLING, MEASURING, AND BATCHING MATERIALS.

(A) HEATING AND STORING INGREDIENTS

Virgin asphalt binder must be heated at the temperature recommended by the binder supplier in a manner that will avoid overheating and provide a continuous supply to the mixer at a uniform temperature.

(B) PROPORTIONING INGREDIENTS

Aggregate and RAP being mixed must be proportioned accurately by weight. Fluids must be proportioned by weight or volume. All scales and meters must be calibrated quarterly and maintained accurate within 0.5%.

(C) MIXING INGREDIENTS

The mixer must be capable of producing a well-coated and homogeneous mixture at the specified temperature. The finished mixture must contain 95% minimum fully coated particles, in accordance with ASTM D2489. The plant must verify the 95% fully coated particles annually and as follows:

i. Whenever plant layout (including RAP collar placement) is altered or major maintenance is performed;
ii. Whenever feed rate is changed for drum plants;
iii. Whenever minimum mixture times are changed for batch plants.

(D) TEMPERATURE OF MIXTURE

Balanced Mix Design asphalt must be mixed and compacted within the temperature ranges shown on the approved mix design.

Unless an alternate range is approved by the Director of QA with the mix design:

1. HMA must be mixed and compacted within 250F and 325F, but all compaction must be completed before the mat temperature falls below 250F.
2. WMA must be mixed and compacted within the ranges recommended by the WMA technology provider, but all compaction must be completed before the mat temperature falls below 230F.

SECTION 7.07 A - REMOVING EXISTING STEEL BOLLARDS

7.07A.1. DESCRIPTION. Under this section, the Contractor shall remove existing steel bollards designated to be removed.

7.07A.2. METHODS. The Contractor shall be required to excavate and remove existing steel bollards complete with foundations and any other appurtenances. The number of bollards to be removed shall be as shown on the plans, unless otherwise directed by the Engineer. All removed materials shall become the property of the Contractor and shall be disposed of by him away from the work site.

All holes left by the removal operations shall be backfilled with a suitable material and compacted in a manner approved by the Engineer.

7.07A.3. MEASUREMENT. The quantity to be measured for payment will be the number of existing bollards removed and disposed of to the satisfaction of the Engineer.

7.07A.4. PRICE TO COVER. The contract price bid shall be a unit price per each bollard removed and shall cover the cost of furnishing all labor, materials, equipment, and incidentals required to complete the work in accordance with the plans, the specifications, and the directions of the Engineer.

Payment will be made under:

Item No.	Item	Pay Unit
7.07A	REMOVING EXISTING STEEL BOLLARDS	EACH

SECTION 7.35 - Pedestrian Channelizer

7.35.1. INTENT.

This section describes the work of providing interlocking Pedestrian Channelizers to be used as temporary pedestrian access route between pedestrian and construction work areas when directed by the Engineer.

Pedestrian channelizer must provide the same level of pedestrian guidance as concrete or plastic barrier, but must be light weight, easier to transport, install and remove with interlocking arrangements.

7.35.2. MATERIALS.

The work will consist of furnishing, maintaining, relocating, and removing Pedestrian Channelizer in sidewalk areas as per the specifications, as shown on the Contract Drawings, or where otherwise directed by the Engineer.

Pedestrian Channelizer units must meet the requirements of the following standards:

a. 2010 ADA Standards for Accessible Design
b. 2013 Proposed Accessibility Guidelines for Pedestrian Facilities in the Public Right-of-Way (PROWAG)
c. 2009 Manual on Uniform Traffic Control Devices (MUTCD), with FHWA Revisions and NYS Supplements

Product must meet the crash test and evaluation criteria contained in the American Association of State Highway and Transportation Officials' (AASHTO) Manual for Assessing Safety Hardware (MASH) and have a FHWA acceptance letter.

Acceptable products include:

a. ADA PEDESTRIAN BARRICADE – STRONG WALL by PLASTICADE
b. ADA COMPLIANT PEDESTRIAN BARRICADE like Safety Rail & SafetyWall by PSS
c. Urbanite 57000 Series by Urbanite
d. Plastic Safety System Safety Wall by PAUL PETERSON SAFETY DIVISION
e. Or approved equivalent

7.35.3. METHODS.

Pedestrian Channelizer units of the various sizes required must be furnished to the site, complete, ready to use. All units must be in good condition and acceptable to the Engineer. Pedestrian Channelizer installed must meet the requirements of the standards listed in **Section 7.35.2** above.

The Contractor must install pedestrian channelizer by placing them where shown on the Contract Drawings or where otherwise directed by the Engineer. Adjacent units must be interlocked. Weights (sand or water ballast in the unit, sandbags, concrete blocks, etc.) must be used per the manufacturer's recommendations, as necessary to ensure stability, or as directed by the Engineer. Weights must not interfere with pedestrian travel. The minimum number of interlocked barricade units in a given run must be two (2), unless otherwise approved by the Engineer. Where less than three (3) units are required and approved by the Engineer, additional measures must be taken by the Contractor to stabilize the shorter length of interlocking barricade and prevent overturning.

At corners, units four (4) feet or less in length must be used to form smooth curved runs of barricade. Contractor must continuously maintain the temporary pedestrian steel barricades, where shown on the Contract Drawings or directed by the Engineer, until ordered by the Engineer to remove the barricades at the completion of a work stage. If a unit or units of barricades become damaged or otherwise unacceptable to the Engineer, the Contractor must replace said units within twenty-four (24) hours of notice by the Engineer, at no additional cost to the City.

7.35.4. MEASUREMENT.

The quantity to be measured for payment will be the number of linear feet of Pedestrian Channelizer constructed and placed, complete, based upon the summation of the lengths of the individual units so constructed and placed.

Payment will be made for only the initial installation at any location. Whenever Pedestrian Channelizer are moved to a new location, as required by the Contract Drawings or directed by the Engineer, payment will be made in the same manner as if it were an initial installation. Whenever the Contractor proposes to move Pedestrian Channelizer to a new location, it is subject to approval of the Engineer and must be in accordance with the latest approved progress schedule. Minor movement of the pedestrian channelizer within a work area will not be considered as a movement to a new location and will not entitle the Contractor to additional payment. Minor movement within a work area includes, but is not limited to

- Movement from one side of the roadway to the other side
- Movement to adjust the roadway or work zone width
- Movement required to access the work zone or to secure the work zone
- Linear movement of less than one block within an established work zone
- Rearrangement within a work area

No payment will be made: for non-interlocked units of barricade; for barricade units greater than four (4') feet in length used in corner quadrants; for movements of pedestrian channelizer made for the Contractor's convenience; for movement of barricades at a given location at the end of a work period and subsequent replacement at the same location at the beginning of the next work period; for movement of barricades at a given location during a work period and subsequent replacement at the same location during the same work period; or for the interchanging of barricades between initial installations.

7.35.5. PRICE TO COVER.

The contract price bid per linear foot for PEDESTRIAN CHANNELIZER will cover the cost of furnishing all labor, materials, plant, equipment, insurance, and necessary incidentals required to furnish, install, maintain, relocate, and remove PEDESTRIAN CHANNELIZER, complete with weights for stability, in accordance with the Contract Drawings, the specifications, and the directions of the Engineer.

Where there is no scheduled item for temporary PEDESTRIAN CHANNELIZER, the cost of furnishing, installation, maintenance, relocation, and subsequent removal of PEDESTRIAN CHANNELIZER as required will be deemed included in the unit price bid for the Maintenance and Protection of Traffic Item.

Payment will be made under:

Item No.	Item	Pay Unit
7.35	Pedestrian Channelizer	L.F.

SECTION 7.70 TPR – Temporary Pedestrian Ramp

(Not a Pay Item)

7.70TPR.1. INTENT.

This section describes the work of providing Temporary Pedestrian Ramps (TPRs) near new pedestrian construction work areas and the ADA guidelines. TPRs should provide access to sidewalk routes when pedestrian ramps are not accessible due to construction activities going on or around pedestrian ramps.

The work will consist of furnishing, installation, maintaining, relocating, and removing temporary pedestrian ramps in order to access sidewalk areas as shown on the Contract Drawings or where otherwise directed by the Engineer.

TPR must consist of temporary pedestrian ramp units having a geometry similar to that shown on the contract drawings, as directed the Engineer and complying with the following requirements:

1. TPR running slope must not exceed 1:12 ramp slope, which equals 4.8 degrees slope or one foot of wheelchair ramp for each inch of rise. For instance, a 30 inch rise requires a 30 foot handicap wheelchair ramp.
2. Cross slope must not exceed 1:48.
3. Handrails must be provided on both sides if rise is more than 6 inches.
4. A minimum 5' x 5' flat, unobstructed area at the top and bottom of the ramp
5. A Minimum width of 36 inches of clear space across the wheelchair ramp.
6. Maximum run of 30 feet will be allowed ramp before a rest or turn platform.
7. Ramp handrail height will be between 34" and 38" in height on both sides of the wheelchair ramps.
8. The TPR must allow for normal street drainage.

Note: At areas with grass strips, ramp to be located at closest concrete walk or driveway by means of ground level decking on grass connecting to the concrete sidewalk or driveway etc.

7.70TPR.2. MATERIALS AND METHODS.

1. LUMBER TPR: Lumber should have a slip-resistant surface. Use pressure treated wood for most of the wood material. Lumber must be preservative-treated southern pine, grade #2 or better. Pressure treated lumber must resists rot and decay with level of treatment as per American Wood Council latest standards. Decking board for the TPR will be at a minimum 2” thick.

2. ALUMINUM TPR: Aluminum should be high traction (e.g., textured extruded aluminum surface), dock plate with a coefficient of friction not less than 0.5 and made from high strength, lightweight aluminum; it should be slip-resistant and have a self-adjusting ground transition plate. The Ramp, Step, and Platform system is designed to be a rigid, free-standing structure. All footplates should be fastened securely to a concrete surface or 12” minimum diameter footings in order to achieve full structural integrity. Footing depth will depend on local building code.

Fastening all platforms to the building or modular building with lag screws is highly recommended.

3. FIBERGLASS/PLASTIC TPR: Fiberglass/ Plastic ramps should be able to take minimum wheelchairs, foot traffic etc., not less than 550 lbs., should be ADA compliant and adapts to varying curb heights from minimum of 2.5” to 7”. Should be anti-slip with high visibility surface and must be bolted for maximum stability and security. Coefficient of friction will not be less than 0.5.

All ramp handrails and ramp guardrails are designed to withstand a concentrated load of 200 pounds applied in any direction on the top of the rail.

All Ramp handrails are designed to be continuous along ramp runs and in between the inside corner of 90 degree and 180 degree turns in ramp direction. Handrails are not interrupted by posts or other obstructions.

Platforms and landings will be designed to carry a uniform live load of 100 pounds per square foot and a concentrated vertical load of 300 pounds in an area of one square foot.

Walking surfaces for serial number 1, 2 and 3 above must be designed to have a coefficient of friction no less than 0.50 in all directions of travel.

7.70TPR.3. METHODS.

All units must be in good condition and acceptable to the Engineer.

The Contractor must install the TPR by placing them where shown on the Contract Drawings, specifications and as directed by the Engineer. All the modular ramps will be assembled as per manufacturer's instructions.

If the modular ramps are pre-assembled and transported to their locations, Contractor must use utmost care in the delivery and installation of these units.

Units can also be fabricated/constructed at site with the approval of the Engineer.

Contractor must continuously maintain the TPR, where shown on the Contract Drawings or directed by the Engineer, until ordered by the Engineer to remove the completion of a work stage. Should a unit or units of barricades become damaged or otherwise unacceptable to the Engineer, the Contractor must replace said units within twenty-four (24) hours of notice by the Engineer, at no additional cost to the City.

7.70TPR.4. MEASUREMENT AND PAYMENT.

The price of Temporary Pedestrian Ramp (TPR) will be deemed included in the prices bid for all the scheduled contract items.

SECTION HW-900H - ALLOWANCE FOR CITY WORK ACCELERATION

Under this Section, the Contractor will be paid for City work deemed necessary by DDC's Commissioner to accelerate the City work items in the project during critical periods but the use of this item will expire on the original contract substantial completion date. Such accelerated City work includes:

A.100% of the premium portions of overtime pay for working during non-scheduled work hours which must be defined as those hours of work outside the permissible hours stated in the original contract OCMC Traffic Stipulations; or,

B. The premium portion of overtime pay for overtime actually worked beyond the 40-hour work week but within the permissible hours of work stated in the original contract OCMC Traffic Stipulations; or,

C. All other incidental expenditures caused by modifications of project site regulations or administrative requirements ordered by the Commissioner that result in additional costs to perform contract work as specified.

Such accelerated City work must be paid for under this item in accordance with the requirements of Articles 25 and 26 of the Standard Construction Contract.

Payment made under this Fixed Sum item must cover the cost of all labor, materials, plant, equipment, insurance, and incidentals necessary to accelerate the City work as ordered by DDC's Commissioner.

No guarantee is given that this allowance item will in fact be required in this contract. The estimated "fixed sum" amount shown in the Bid Schedule is included in the total bid solely to insure a method of payment for any accelerated work performed by the Contractor, as directed by DDC's Commissioner.

Payment will be made under:

Item No.	Item Pay	Unit
HW-900H	ALLOWANCE FOR CITY WORK ACCELERATION	F.S.

S - PAGES

GENERAL AND SPECIAL PROVISIONS:

(A) GENERAL PROVISIONS
(B) HIGHWAY PROJECT SPECIFIC PROVISIONS
(C) SEWER & WATER MAIN PROJECT SPECIFIC PROVISIONS
(D) GREEN INFRASTRUCTURE PROVISIONS

NOTICE

THE PAGES CONTAINED HEREIN (S-PAGES) ARE GENERAL AND SPECIAL PROVISIONS THAT APPLY TO THE WORK AND ARE PART OF THE CONTRACT DOCUMENTS.

(NO TEXT ON THIS PAGE)

TABLE OF CONTENTS

(A) GENERAL PROVISIONS

ARTICLE	DESCRIPTION	PAGE NO.
A	LINES AND GRADES	S-1
B	SPECIFIC TRAFFIC STIPULATIONS	S-1
C	HOLIDAYS CONSTRUCTION EMBARGO	S-1
D	CONTRACT ITEMS THAT INCLUDE BACKFILL AS PART OF THEIR WORK	S-2
E	ACCELERATED PROJECT SCHEDULE AND COMBINATION OF STAGES	S-2
F	DISPOSAL OF EXCESS EXCAVATED MATERIAL	S-2
G	NO EXTENSIONS OF TIME FOR WINTER SHUT-DOWN	S-2
H	PRIVATE UTILITY HARDWARE ADJUSTMENTS	S-2
I	SURVEY MONUMENTS	S-2
J	RESTORATION OF ADJACENT AREAS	S-2
K	FLAGGERS	S-2
L	FUEL COST	S-3
M	NYCDPR CONSTRUCTION PERMITS AND OTHER REQUIREMENTS	S-3
N	START OF CONTRACT WORK	S-4
O	STANDARD WORKING HOURS	S-4
P	TREE BARRIERS	S-4
Q	UTILITIES	S-4
R	HOUSE CONNECTIONS	S-4
S	STREET LIGHT AND TRAFFIC SIGNAL	S-4
T	SAW CUT	S-4
U	PRE-CONSTRUCTION STAGE	S-5

ARTICLE	DESCRIPTION	PAGE NO.
V	EXISTING SEWERS. WATER AND APPURTENANCE	S-5
W	RECONNECTING EXISTING SEWERS TO NEW MANHOLES	S-5
X	VIBRATION MONITORING	S-5
Y	CITY ASSETS	S-5
Z	"AS-BUILT" DRAWINGS FOR WATER MAINS AND APPURTENANCES 24-INCHES (600-MM.) AND LARGER	S-6
AA	NO ADDITIONAL PAYMENT	S-7
AB	SHEETING AND EXCAVATION AT TRANSIT FACILITIES	S-7
AC	ARCHAEOLOGICAL DISCOVERIES	S-7
AD	USE OF CITY WATER	S-8
AE	PUBLIC DISSEMINATION OF INFORMATION	S-8
AF	PRICES TO INCLUDE	S-9

(B) HIGHWAY PROJECT SPECIFIC PROVISIONS

1	SPECIAL EVENTS	S-10
2	THE CONTRACTOR IS NOTIFIED	S-10
3	INSPECTION FORM (PRISM)	S-10
4	ITEM 6.44	S-11
5	OCMC TRAFFIC STIPULATIONS – ENHANCED MITIGATIONS FOR PEDESTRIAN FLOW	S-11
6	PRICES TO INCLUDE	S-11
7	PHASING REQUIREMENT	S-11
8	OCMC TRAFFIC STIPULATIONS	S-12
9	BINDING REPORT SRB-24-11932	S-23
10	QED1063AC – PHASING CHART	S-25

(NO TEXT)

(C) SEWER & WATER MAIN PROJECT SPECIFIC PROVISIONS

(NO TEXT)

(D) GREEN INFRASTRUCTURE PROVISIONS

(NO TEXT)

(NO TEXT ON THIS PAGE)

(A) GENERAL PROVISIONS

A. LINES AND GRADES. The Contractor must furnish lines and grades in accordance with Section 1.06.27 of the NYCDOT Standard Highway Specifications, except that survey controls established for this project may no longer exist and the Contractor will be required to re-establish the survey control information using official Borough Survey Control Monuments and Bench Marks, where they exist. The Contractor must check with Topographic Section of the Borough President's Office as to the reliability and accuracy of the data to be used for lines and grades.

B. SPECIFIC TRAFFIC STIPULATIONS. Under this contract, the Contractor must perform the work in strict accordance with the requirements of Section 6.70 in the Standard Highway Specifications, specific traffic stipulations as called for on the plans, Office of Construction Mitigation and Coordination (OCMC) Traffic Stipulations attached to the end of these Special Provisions, and the directions of the Engineer. In case of a conflict, the Engineer's decision will be final.
The Contractor must plan and schedule the work in order to accommodate all special events listed in the NYCDOT Special Events Annual Calendars. The calendars are available at the following link:

https://nycdot.sharepoint.com/:f:/s/publicshare/Ei2XN4G99_JFkdrtjD_cJ0QBtSPr2xhVrApcqAs1KSLpeA?e=j276PF

In addition, the cost of compliance with requirements of the OCMC Traffic Stipulations, unless otherwise provided for, will be deemed included in the prices bid for all scheduled items..

C. HOLIDAY CONSTRUCTION EMBARGO. A special Holiday Construction Embargo will be in effect on the Friday of the week preceding Thanksgiving Day week from 6:00 AM to 11:59 PM and again from the Monday of Thanksgiving Day week from 6:00 AM through January 2, at 11:59 PM. Roadway and sidewalk construction activities will be restricted during the embargo period on the streets listed below*.

Any permits issued prior to the date of this notice, for work during this embargo period on the streets listed below* which do not already have the permit stipulation "410" are hereby suspended for the period noted above. All permittees must comply with this embargo unless a special waiver is granted by OCMC. Waiver requests must be filed at least thirteen days before Thanksgiving Day, in the Permit Office by filing a "Request for Roadway/Sidewalk Permits During "Embargo Periods" and submitting supporting documentation. Waiver requests should only be submitted for critical reasons for a specific project. If a waiver is granted, the applicant will be notified so they can apply for the approved permits. Waivers **are not** required for ongoing Building Construction Activity Permits which already include the "410" permit stipulation. Waiver request forms may be obtained at any Permit Office or on the Department of Transportation's website at:
http://www.nyc.gov/html/dot/downloads/pdf/holidayembapp.pdf
Prior to this embargo period all necessary measures must be taken so that all roadways and sidewalks are in proper condition to allow for the expeditious and safe movement of vehicular, bicycle and pedestrian traffic. Tool carts, cable reels, containers, and material stored on roadways must be removed during the embargo period.

The opening of utility access covers is prohibited on any of the streets noted below** between the hours of 6:00 AM and midnight unless the utility or Contractor files for an Emergency Authorization Number as required by Section 2-07 of the Department of Transportation's Highway Rules. The planned opening of utility access covers may occur during the hours of 12:01 AM and 5:59 AM where no authorization number is required.

Temporary restoration of the streets and sidewalks and removal thereof, if required for the Holiday Embargo period, will be paid for under the appropriate scheduled items.

No extension of time due to the shutdown period will be granted to the Contractor for completion of the work.

*** Please note that this embargo only applies to NYCDOT construction permits.**
**** List of street and maps of the affected locations are available by borough on the Department of Transportation's website at: http://www.nyc.gov/html/dot/html/motorist/trafalrt.shtml**

D. CONTRACT ITEMS THAT INCLUDE BACKFILL AS A PART OF THEIR WORK. The following will pertain to all contract items that have backfill as a part of their work: Backfilling will comply with Subsection 4.11.3 of the Standard Specifications and no additional payment will be made for any Highway or Street Lighting work item requiring Contractor to furnish additional fill material to meet these requirements when backfilling.

E. ACCELERATED PROJECT SCHEDULE AND COMBINATION OF STAGES. Contractor will plan and/or stage his/her work schedule using all hours/days available. Contractor is advised that all applicable unit prices will include, for the purpose of this contract, all overtime costs, premium time costs, shift differentials required to complete construction within the specified "Time(s) of Completion" stipulated in this contract.

Contractor will be permitted to accelerate this project, to combine stages and/or work sequences. Any such changes will be shown in the construction schedule, to be furnished in accordance with the General Provisions of the Standard Specifications.

F. DISPOSAL OF EXCESS EXCAVATED MATERIAL. All excess excavated material, with the exception of contaminated material, will become the property of the Contractor and will be properly disposed of away from the site, at the Contractor's expense. Contaminated material will be disposed of separately in accordance with contract requirements.

G. NO EXTENSION OF TIME FOR WINTER SHUT-DOWN. Where the Contractor's approved work schedule for installing sidewalk, curb, roadway base and/or pavement falls within the winter period of December 1st through April 1st, the Contractor will NOT be granted an extension of time for completion of this contract due to the winter shut-down period, unless otherwise provided in Schedule A.

H. PRIVATE UTILITY HARDWARE ADJUSTMENTS. will be performed by the owning utility company or its agent, at its expense. The Contractor must notify the utility company 72 hours prior to start of work at each location where its hardware requires adjustment.

I. SURVEY MONUMENTS. When working in the vicinity of survey monument the Contractor will hand excavate per Item 8.02 AB-S, 8.02 A and 8.02 B (as applicable), at City Survey Monuments, for a distance of five (5) feet around each monument, as directed by the Engineer.

J. RESTORATION OF ADJACENT AREAS. The Contractor will be required to remove all form work. In planting strip areas, the Contractor will be required to restore areas damaged as a result of the Contractor's operations, to the satisfaction of the Engineer, with sod. The Contractor will also, as directed by the Engineer, make safe adjacent areas to the Contractor's work, such as: restoring missing or damaged pavement markings that were removed or damaged as a result of the Contractor's operations (as per requirements of Section 6.44 in the Standard Specifications); resetting granite blocks in tree pits; and, applying binder mixture (Item 4.02 CA or as applicable) where badly broken sidewalk or curb may create a dangerous condition just outside his area of operation, where and when directed by the Engineer.

All restoration work must be performed to the satisfaction of the Engineer.

K. FLAGGERS. The Contractor is notified that wherever the Item No. "6.52" and words "flagger", "flagperson" and "flagman" are used in the contract documents and drawings it will mean the Item No. "6.52 CG" and the words "Crossing Guard", respectively.

L. FUEL COST. The Contractor is notified that the fuel cost per gallon used in the formula under Sub-Article 26.2.8 of the Standard Construction Contract for Extra Work will be derived from the fuel price index for the United States East Coast published weekly by the United States Energy Information Administration ("USEIA"), and available on its website at **http://www.eia.gov/petroleum/gasdiesel/.** The USEIA-published cost per gallon for the applicable fuel on the East Coast for the week in which the first day of each calendar quarter during the contract term occurs (i.e., January 1st, April 1st, July 1st and September 1st) will be used in the reimbursement formula for all **Extra Work** invoiced that was performed during that calendar quarter. Should the USEIA stop publishing this fuel price index, the fuel cost per gallon will be determined by reference to a substitute index to be agreed upon by the Contractor and the City.

M. NYCDPR CONSTRUCTION PERMITS AND OTHER REQUIREMENTS.

1. At least thirty (30) days prior to the upcoming start of construction at or near the New York City Department of Parks and Recreation (NYCDPR) land , the Contractor is required to issue a notice to NYCDPR about the start of construction activity. At least 30 days in advance of the Order to Work Date, the Contractor must notify the New York City Department of Parks and Recreation (NYCDPR) of the upcoming start of construction by emailing interagency@parks.nyc.gov.

2. Parks Construction Permits are required for all work on Parkland. Construction Permits may also be required for work on sidewalks adjacent to Parks properties or other areas maintained by NYCDPR such as Greenstreets depending on the scope of work. It is the Contractor's responsibility to coordinate with Parks via email at **interagency@parks.nyc.gov** to establish whether Construction Permits are required for the contract scope of work.

3. The Contractor will not be permitted to store, stage, stockpile, barricade, lay down construction materials or equipment, or otherwise impede access to Parkland, Greenstreets, or sidewalks in the right-of-way fronting Park properties unless such permission is granted by NYCDPR via issuance of a Parks Construction Permit.

4. The Contractor must obtain the necessary Parks Construction Permit from NYCDPR prior to the start of work on Parkland or areas under Parks' jurisdiction. The Construction Permit application is found online at https://www.nycgovparks.org/permits/construction.

5. When no Construction Permit is required, the contactor must notify Parks at interagency@parks.nyc.gov at least one week in advance of any construction adjacent to Greenstreets or in the right-of-way fronting Parks properties to allow for coordination as needed.

6. The Contractor is responsible for the protection of any Greenstreets, sidewalks, and other landscape features under NYCDPR jurisdiction that are adjacent to or enclosed by the construction area, including hardscape, landscape, shrubs, and trees. Any areas and features disturbed or damaged during construction activity are the responsibility of the Contractor to restore and repair.

7. Many NYCDPR properties are indicated on the publicly accessible online mapping resource of the New York City Department of Information Technology and Telecommunications (DOITT) at **http://maps.nyc.gov/doitt/nycitymap**/. However, the map is not exhaustive, and Contractors should confirm Parks properties in the vicinity of their work with NYCDPR.

8. The Contractor must take necessary precautions to prevent interference with or damage to utilities or other facilities during construction. The cost of all work connected with maintaining and protecting utilities affected by the work be borne by the Contractor and the cost will be deemed included in the price bid for the various items in the contract.

9. In the event the Contractor damages an existing utility or interrupts utility service, the Contractor will immediately notify its owner and the Engineer and must commence repair/replacement work as instructed by the Engineer.

10. In the event the Contractor causes an interruption in utility service, the Contractor will immediately arrange for service to be restored and may not cease the repair work until service is restored. The Contractor will not continue work until the service is restored, unless otherwise directed by the Engineer. All corrective utility work will be acceptable to the engineer and the subject utility owner.

11. If any utility service or connection of unknown ownership is encountered during construction which appears to enter or serve Parkland, Contractor must contact Parks at **interagency@parks.nyc.gov** to inquire if Parks is the owner of such utility.

N. START OF CONTRACT WORK. The Contractor is notified that a Notice To Proceed (NTP) date will be issued for work to commence within 21 to 30 Days of Contract Registration.

O. STANDARD WORKING HOURS: In absence of OCMC Traffic Stipulations, Section 1.06.23 (P) of NYC DOT STANDARD HIGHWAY SPECIFICATIONS regarding standard working hours is to be followed is to be followed. Work performed outside the standard working hours must be pre-approved by NYC DDC.

P. TREE BARRIERS. The Contractor will furnish, install, maintain and subsequently remove temporary Protective Tree Barriers. Protective Tree Barriers will be Type B, unless otherwise directed by the Engineer, and will be constructed and installed as shown on the Protective Tree Barrier sketch in Department Of Transportation, Standard Highway Details Of Construction, Drawing No. H-1046A, as directed by the Engineer, and in accordance with Department of Parks and Recreation requirements.
Price of the tree barriers must be included in the in the unit prices bid for all scheduled items.

Q. UTILITIES. All utility locations and invert elevations are not guaranteed, nor is there any guarantee that all existing utilities, whether functional or abandoned within the project area are shown.

R. HOUSE CONNECTIONS. All existing house connections will be maintained and supported during construction. The Contractor will replace any existing house connection damaged as a result of the Contractor's construction operations as ordered by the Engineer at no cost to the City.

S. STREET LIGHT AND TRAFFIC SIGNAL. The Contractor is responsible for any damage to the existing street lighting and traffic signal equipment, including underground conduits and the safety of both pedestrian and vehicular traffic for the duration of the contract. All street lighting and traffic signal foundations require grounding rod to be installed per Street Lighting Drawing SL-MIS-014. The costs of the grounding rod must be included in the prices bid for the associated street lighting or traffic signal work.
Should any conduits, cables or foundations need repair due to the Contractor's negligent operations during construction, all work will be performed according to NYCDOT Bureau of Traffic's Standard Drawings and Specifications and City of New York DOT System Engineering Specifications (dated November 2013) at the sole expense of the Contractor.

It is the Contractor's responsibility to secure an approved electrical Contractor to perform all traffic signal work (if any). For list of approved electrical Contractors, contact Bjorn Seedan or James Celentano, New York City Department of Transportation at (212) 839-3790.

T. SAW CUT. The Contractor is advised that where the existing roadway pavement is designated to be replaced from curb to curb, then no full depth saw cutting of pavement for sewer

and water main trenches will be required, except at the limits of full width pavement restoration. No separate or additional payment will be made for any saw cutting.

U. PRE-CONSTRUCTION STAGE. The Contractor is advised that the Base Contract Duration (consecutive calendar days "ccds") must also include pre-construction stage from the Notice To Proceed date. During this stage the Contractor is required to submit the necessary shop drawings, obtain all permits and submit the health and safety plan for review and approval. The Engineer's field office will also need to be established during this pre-construction stage period. Failure to comply with the pre-construction stage requirements may result in assessing liquidated damages to the Contractor for everyday beyond the pre-construction stage duration. The liquidated damage will be of equivalent value as identified in the Schedule A for work beyond the construction completion date.

V. EXISTING SEWERS, WATER AND APPURTENANCE. The Contractor is notified that at some locations there may exists sewers, manholes, water mains, etc., which are to remain undisturbed and are in close proximity to the line of the proposed work. The Contractor exercise extreme care, minimize the trench width of the proposed sewers and take all necessary precautions in placing sheeting and during excavation of the trenches to prevent any damage to the existing structures, pavement, curbs, and sidewalks that are to remain while working adjacent to them. The Contractor maybe restricted to use wood sheeting at certain critical locations as directed by the Engineer. Should any damage occur to any portion of the existing structures that are to remain due to the Contractor's operations, the Contractor will make all repairs to the existing structures to the satisfaction of and as directed by the Engineer. The cost of such repair will be borne by the Contractor, at no cost to the City. Additional cost to use wood sheeting specifically to ensure integrity of existing sewer structures will be deemed included in all bid items for work.

W. RECONNECTING EXISTING SEWERS TO NEW MANHOLES. If there are locations on the contract plans, where the Contractor is required to reconnect all existing sewers to the proposed manholes in this contract. The said manholes will be fabricated to provide openings for the existing sewers at the specified invert elevations as shown on the contract drawings. The cost of reconnecting existing sewer pipes to new manholes, including concrete collar with steel reinforcements and/or grouting around the existing sewer pipes at the openings and all work necessary to complete the pipe reconnection, to the satisfaction of the Resident Engineer will be deemed included in the prices bid for all items of work. No additional payment will be made.

[ARTICLE "X" IS ONLY APPLICABLE IF ITEMS FOR VIBRATION MONITORING ITEM NO. 76.31 IS IN THE BID SCHEDULE]

X. VIBRATION MONITORING. In case of structures requiring vibration monitoring, the Contractor, in addition to Continuous Real Time Monitoring for Vibrations as determined in the Construction Report must provide Continuous Real Time Monitoring for Vibrations of existing buildings/structures adjacent to or in the proximity of different types of construction activities being conducted including, but not limited to, installation of sheeting for construction of proposed water and sewer mains, installation of sheeting for excavation of jacking/receiving pits, direct jacking of sewers, piling work or as directed by the Engineer.

Y. CITY ASSETS. The Contractor is advised that any City owned light poles, traffic signals, street name signs, traffic signs and encumbrances including, but not limited to, underground conduit displaced as the result of the installation of the new sewers, water mains, catch basins, catch basin connections and appurtenances will be replaced in kind and as directed by the Engineer. The cost of such work will be deemed included in the prices bid for all items of work under this contract.

[ARTICLE "Z" IS ONLY APPLICABLE FOR WATERMAIN 24-INCHES AND HIGHER]

Z. <u>"AS-BUILT" DRAWINGS FOR WATER MAINS AND APPURTENANCES 24-INCHES (600-MM.) AND LARGER</u>: Upon the completion of the work for each Capital Project and as a condition precedent to obtaining the certificate for Substantial Completion for each Capital Project under Article 44 of the Contract, the Contractor will furnish "As-Built" drawings for water mains and appurtenances 24-inches and larger to the City. The Contractor will prepare and submit the "As-Built" record drawings to the Engineer for approval. Approved "As-Built" drawings will be delivered to the Department of Design and Construction, 30-30 Thomson Avenue, Long Island City, New York, 11101-3045. The following guideline is provided for the preparation of "As-Built" record drawings:

1. The Contractor will prepare the "As-Built" drawings on AutoCAD and will provide to the City two (2) sets of Mylar and AutoCAD files on a CD. The drawings on CD's and the plotted Mylar's will conform to the standard size of 22" x 36" (559-mm. x 914-mm.) using a 1"=30' (1:360) horizontal and 1"=10' (1:120) vertical scale. The Mylar will be 3-mil in thickness.

2. The "As-Built" drawings will include but not be limited to the following guidelines summarized below:

(a) Drawings will consist of the same legend and layout of title boxes shown on the contract drawings.

(b) Each plotted Mylar drawing will contain the signature and stamp of the Contractor's NYS Professional Engineer/Registered Architect.

(c) The drawings will include:

- street name and crossing street(s) or distance from;
- north arrow;
- property lines and widths;
- legal and existing street widths, street alignment and grades;
- "new" curb lines and widths;
- water main center line measured off the "new" curb line;
- horizontal stationing for all valves, hydrants, outlets, blow-offs, house service connections, etc., measured on a horizontal line as established by the Borough Office Bureau of Topographic;
- alignment and appurtenance location stationing, and deflection angles;
- cover and elevations (Datum used will be that of the Borough where work is located);
- location of pipe joints;
- profile of all piping;
- complete details of all outlet piping roundabouts;
- complete details of all blow-off connections to the sewer;
- complete details of all air cocks;
- location of taps and access manholes;
- location of all cathodic protection stations;
- Venturi sensing lines plans and profiles;

- all appropriate notes.

3. The cost of preparing and submitting “As-Built” approved drawings will be deemed included in the prices bid for all scheduled bid items in the contract. No separate or additional payment will be made for this work.

AA. NO ADDITIONAL PAYMENT. The Contractor is advised that any fences, guardrails, boulders, asphalt walkway of the park, fixtures, other encumbrances removed within project limits during construction will be replaced in kind to the satisfaction of the Engineer. The cost of such work will be deemed included in the prices bid for all contract items of work and no additional or separate payment will be made.

AB. SHEETING AND EXCAVATION AT TRANSIT FACILITIES. In case of transit facilities like MTA, LIRR, METRO NORTH etc., the Contractor will exercise extreme caution and take all necessary precautions in placing sheeting and excavation to prevent any damage to the existing underground or overhead structures and its appurtenances during construction work throughout the project area. The Contractor must take full responsibility to protect the said structures and its appurtenances and any damage caused by the Contractor’s operations must be made good by the Contractor to the satisfaction of the Engineer at no additional cost to the City.

The Contractor must submit shop drawings to the Transit facilities showing all the details and methods of construction, such as, sheeting and bracing, including the Contractor’s procedure and sequence of construction, supporting and/or protection of the existing structures and its appurtenances, with necessary design calculations for approval prior to starting of the construction. The design will be made by a New York State Licensed Professional Engineer skilled in this type of construction and as further evidenced by the imprint of Professional Engineer’s seal and signature on all drawings. The cost of this work will be deemed included in the price bid for all items of work under this contract.

AC. ARCHAEOLOGICAL DISCOVERIES. The Contractor is notified that if requested by the Resident Engineer and the City, the Contractor will be required retain the services of an Archaeologist (the "City's Archaeologist") for this project.

The City's Archaeologist will be notified in advance and will be present on site during sub-surface excavations as deemed necessary. The City's Archaeologist will be authorized to halt construction at any time in order to record and/or recover any archaeological resources encountered during excavations, and to stabilize in place any human remains encountered.

For the purpose of evaluating and recording archaeological resources, the City's Archaeologist will be allowed to enter trenches provided all standard safety requirements are met. It is understood that some construction down time may be necessary.

In the event that human remains, and/or other significant archaeological deposits are encountered during construction or archaeological investigations, Landmarks Preservation Commission (LPC) will be notified as directed by the City's Archaeologist and the State Historic Preservation Office (SHPO) requires that the following protocol is implemented:

1. At all times human remains must be treated with the utmost dignity and respect. Should human remains be encountered work in the general area of the discovery will stop immediately and the location will be immediately secured and protected from damage and disturbance.

2. Human remains or associated artifacts will be left in place and not disturbed. No skeletal remains or materials associated with the remains will be collected or removed until appropriate consultation has taken place and a plan of action has been developed.

3. The County coroner and local law enforcement as well as the SHPO and the involved agency will be notified immediately. The coroner and local law enforcement will make the official ruling on the nature of the remains, being either forensic or archeological. If the remains are archeological in nature, a bio-archaeologist will confirm the identification as human.

4. If human remains are determined to be Native American, the remains will be left in place and protected from further disturbance until a plan for their protection or removal can be generated. The involved agency will consult SHPO and appropriate Native American groups to determine a plan of action that is consistent with the Native American Graves Protection and Repatriation Act (NAGPRA) guidance.

5. If human remains are determined to be Euro-American, African- American, etc., the remains will be left in place and protected from further disturbance until a plan for their avoidance or removal can be generated. Consultation with the SHPO and other appropriate parties will be required to determine a plan of action.

Should extra work be ordered by the Resident Engineer as a result of any archaeological discoveries, it will be paid for from the Fixed Sum included in, and in accordance with Item HW-908 Allowance for Extra Work Due To Archaeological Discoveries.

AD. USE OF CITY WATER. Please refer to NYCDOT STANDARD HIGHWAY SPECIFICATIONS (May 16, 2022), Sub Section 1.06.23 (A), Rules, Laws, and Requirements, for use of City water.

AE. PUBLIC DISSEMINATION OF INFORMATION. The Contractor agrees to hold confidential, both during and after the completion or termination of this Contract, all of the reports, information, or data, furnished to, or prepared, assembled or used by, the Contractor under this Contract. The Contractor agrees to maintain the confidentiality of such reports, information, or data by using a reasonable degree of care, and using at least the same degree of care that the Contractor uses to preserve the confidentiality of its own confidential information. The Contractor agrees that such reports, information, or data will not be made available to any person or entity without the prior written approval of the Commissioner. The obligation under this Section to hold reports, information or data confidential will not apply where the Contractor is legally required to disclose such reports, information or data by virtue of a subpoena, court order or otherwise ("disclosure demand"), provided that the Contractor complies with the following: (1) the Contractor will provide advance notice to the Commissioner, in writing or by e-mail, that it received a disclosure demand for such reports, information or data and (2) if requested by the Commissioner, the Contractor will not disclose such reports, information or data until the City has exhausted its legal rights, if any, to prevent disclosure of all or a portion of such reports, information, or data. The previous sentence will not apply if the Contractor is prohibited by law from disclosing to the City the disclosure demand for such reports, information or data.

The Contractor will restrict access to confidential information to persons who have a legitimate work-related purpose to access such information. The Contractor agrees that it will

instruct its officers, employees, and agents to maintain the confidentiality of any and all information required to be kept confidential by this Contract.

The Contractor, and its officers, employees, and agents will notify the Commissioner, at any time either during or after completion or termination of this Contract, of any intended statement to the press or any intended issuing of any material for publication in any media of communication (print, news, television, radio, Internet, etc.) regarding the services provided or the data collected pursuant to this Contract at least twenty-four (24) hours prior to any statement to the press or at least five (5) business days prior to the submission of the material for publication, or such shorter periods as are reasonable under the circumstances. The Contractor may not issue any statement or submit any material for publication that includes confidential information as prohibited by this Section.

At the request of the Commissioner, the Contractor will return to the Commissioner any and all confidential information in the possession of the Contractor or its sub Contractors. If the Contractor or its sub Contractors are legally required to retain any confidential information, the Contractor will notify the Commissioner in writing and set forth the confidential information that it intends to retain and the reasons why it is legally required to retain such information. The Contractor will confer with the Commissioner, in good faith, regarding any issues that arise from the Contractor retaining such confidential information. If the Commissioner does not request such information, or the Law does not require otherwise, such information will be maintained in accordance with the requirements set forth in the Contract Documents.

AF. PRICES TO INCLUDE. No direct payment will be made for costs incurred in complying with the foregoing Special Provisions, unless otherwise provided. Said costs will be deemed to have been included in the prices bid for all the scheduled contract items.

(B)HIGHWAY PROJECT SPECIFIC PROVISIONS

1. **SPECIAL EVENTS.** Where the Contractor is notified of a Special Unscheduled Event, such as a civic parade or other official activity, party, etc., then the Holiday Embargo restrictions under Article C, above, shall apply. Temporary restoration of the streets and sidewalks and subsequent removal, if required, for those Special Unscheduled Event periods will be paid for under the appropriate scheduled items 4.02 CB and 6.02 AAN and the Contractor will be granted an extension of time, for the completion of the work, equal to the duration of the ordered shutdown.

2. **THE CONTRACTOR IS NOTIFIED** that should human remains be encountered during the course of work, the work must be stopped immediately pending the Office of Chief Medical Examiner and the New York Police Department notification and review.

3. **INSPECTION FORM / TECHNICAL INFEASIBILITY FORM (TIF).**

   a. Prior to the determination of Substantial Completion for the Project, all locations constructed under this Contract must be substantially completed and accompanied by an approved PRISM inspection form and where applicable, approved technical infeasibility form(s).

   b. The approved PRISM inspection form will be the determination made by the Engineer informing the contractor that the pedestrian ramps are accepted or rejected as non-compliant with Contract Specifications and thereby instructing the contractor to reconstruct the rejected pedestrian ramps at no cost to the City.

   c. If a rejected pedestrian ramp can be justified as built to the maximum Extent Technically Feasible, as defined by the United States Access Board, then the Contractor must submit a completed Technical Infeasibility Form (TIF) no later than two (2) weeks after construction and submit it to the Engineer for approval. All TIFs submitted to the Engineer must be signed and sealed by a licensed Professional Engineer registered in New York State. No separate payment will be made to the Contractor for services of Professional Engineer and the price to be deemed included into the price of all pedestrian ramp items. All TIFs must be approved by the Engineer otherwise the pedestrian ramp must be re-installed to be ADA compliant at no additional cost to the City.
   The PRISM inspection form may be found at the following website:
   https://www.nycpedramps.info/sites/default/files/2023-03/TI_23-001_Pedestrian_Ramp_Inspection_Application_PRISM.pdf
   The TIF may be found at the following website:
   https://www.nycpedramps.info/sites/default/files/2023-01/DOT_Technical-Infeasibility-Form_v2.0.pdf

4.**ITEM 6.44** - The NYC DOT Standard Specifications Section 6.44.3(F) entire text is modified herein as following:

Preformed reflectorized pavement markings from NYSDOT Approved List 727-04 may be used for all pavement marking restorations, at no extra cost.

5. OCMC TRAFFIC STIPULATIONS – ENHANCED MITIGATIONS FOR PEDESTRIAN FLOW

The crosswalk assistance work listed in the referred article is to be performed by crossing guards, not pedestrian managers or flaggers.

6. **PRICES TO INCLUDE**. No direct payment will be made for costs incurred in complying with the foregoing Special Provisions, unless otherwise provided. Said costs will be deemed to have been included in the prices bid for all the scheduled contract items.

7. **PHASING REQUIREMENTS** The locations in this contract have been grouped into three phases, in order to minimize the utility interferences. A table of the locations and their phases is attached to the end of Part B of these S-Pages.

The Contractor is required to complete the phases in order – all of the locations in phase 1, then the remaining locations in phase 3. Should unknown interferences be found at a location, the Engineer may move locations into the final phase in order to allow the Contractor to continue prosecuting the remaining work in a timely manner.

As the phasing requirements are specifically intended to allow for the private utilities to complete relocations ahead of the Contractor's Work, the Contractor may not secure street opening permits more than one month ahead of scheduled work.

NEW YORK CITY DOT
Department of Transportation

Ydanis Rodriguez, Commissioner

OCMC TRAFFIC STIPULATIONS

January 13, 2025

OCMC FILE NO: CEC-24-426
CONTRACT NO: QED1063AC
PROJECT: INSTALLATION OF DISTRIBUTION WATER MAINS

PERMISSION IS HEREBY GRANTED TO **THE NEW YORK CITY DEPARTMENT OF DESIGN AND CONSTRUCTION (NYC DDC)** AND ITS DULY AUTHORIZED AGENT, TO ENTER UPON AND RESTRICT THE FLOW OF TRAFFIC AT THE LOCATION(S) BELOW FOR THE PURPOSE OF CARRYING OUT THE ABOVE NOTED PROJECT, SUBJECT TO THE STIPULATIONS, AS NOTED BELOW:

I. SPECIAL STIPULATIONS

A. **EMBARGOES** – A CONSTRUCTION EMBARGO WILL APPLY TO THOSE LOCATIONS BELOW WHICH FALL WITHIN THE **HOLIDAY EMBARGO** OR ANY OTHER SPECIAL EVENT/CONSTRUCTION EMBARGOES PUBLISHED BY THE BUREAU OF PERMIT MANAGEMENT AND CONSTRUCTION CONTROL.

B. **BIKE LANES** – FOR ANY WORK IN OR AFFECTING A BIKE LANE, THE PERMITTEE MUST COMPLY WITH THE **NEW GUIDELINES FOR THE MAINTENANCE & PROTECTION OF TRAFFIC PLAN FOR CYCLING**, WHICH ARE AVAILABLE AT:

https://www1.nyc.gov/html/dot/downloads/pdf/bike-mpt-guidelines.pdf

C. **BUS STOPS/BUS ROUTES** – THE PERMITTEE SHALL PROVIDE WRITTEN NOTICE TO NYC DOT OCMC AND NEW YORK CITY TRANSIT (NYCT) A MINIMUM OF FIVE (5) WEEKS IN ADVANCE FOR LANE/STREET CLOSURES THAT AFFECT BUS STOPS/BUS ROUTES. NYCT MUST APPROVE ANY PROPOSED IMPACT PRIOR TO THE PERMITTEE MOBILIZING.

BRONX	MICHAEL WALLIN (MICHAEL.WALLIN@NYCT.COM)
BROOKLYN	BRENNAN ORTIZ (BRENNAN.ORTIZ@NYCT.COM)
MANHATTAN	PHILIP SPEIDEL (PHILIP.SPEIDEL@NYCT.COM)
QUEENS	JIE LI (JIE.LI@NYCT.COM)
STATEN ISLAND	COLIN HARRINGTON (COLIN.HARRINGTON@NYCT.COM)

D. **ACCESS TO ABUTTING PROPERTIES** – THE PERMITTEE SHALL COORDINATE ALL ACTIVITIES WITH ABUTTING PROPERTY OWNERS TO ENSURE ACCESS IS PROVIDED TO/FROM ENTRANCES/DRIVEWAYS AT ALL TIMES.

E. **BIKE SHARE STATIONS:** THE PERMITTEE SHALL NOT REMOVE, RELOCATE, DAMAGE OR DISRUPT THE OPERATION OF EXISTING BIKE SHARE STATIONS WITHOUT FIRST CONTACTING NYC BIKE SHARE AT 855-245-3311 FOR THEIR REQUIREMENTS PRIOR TO COMMENCING WORK.

F. **NYC DOT STREET FURNITURE:** THE PERMITTEE SHALL NOT MOVE, DAMAGE OR DISRUPT ANY EXISTING WALKNYC WAYFINDING SIGNS, BIKE RACKS, BENCHES, LEANING BARS, GRANITE BLOCKS, OR PLANTERS ON THE SIDEWALK OR ROADWAY. THE PERMITTEE MUST CONTACT NYC DOT VIA EMAIL AT STREETFURNITUREUNIT@DOT.NYC.GOV A MINIMUM OF TWO (2) WEEKS PRIOR TO COMMENCING ANY WORK WHICH IMPACTS ON THE STREET FURNITURE.

G. NYC DOT SIGNALS SYNCHRO TRAFFIC ANALYSIS REQUIREMENT: Prior to commencing work, the Permittee may be required to perform a traffic study and Synchro analysis if proposed construction will result in a lane reduction, which remains in effect for a period of five (5) days or more. A Synchro analysis will not be required for major closures or lane reductions occurring during nighttime hours of 9:00pm and 5:00am. For further detailed requirements related to traffic study and Synchro analysis preparation, the Permittee shall contact Nady Ibrahim of the NYC DOT Traffic Signal Timing Unit at (212) 839-3371 (nibrahim@dot.nyc.gov).

H. **PROTECTION OF NYC DEP GREEN INFRASTRUCTURE:** THE PERMITTEE SHALL TAKE PRECAUTION OF NYC DEP GREEN INFRASTRUCTURE IN THE RIGHT-OF-WAY. PERMITTEE MUST CONTACT NYC DEP 48 BUSINESS HOURS BEFORE CONSTRUCTION STARTS AT GIUTILITY@DEP.NYC.GOV FOR FURTHER INSTRUCTION ON HOW TO PROCEED. ALSO, THE PERMITTEE MUST FOLLOW NYC DEP'S GREEN INFRASTRUCTURE PROTECTION REQUIREMENTS AT **HTTPS://WWW1.NYC.GOV/SITE/DEP/WATER/GREEN-INFRASTRUCTURE.PAGE**. PERMITTEE IS RESPONSIBLE FOR RESTORATION, REPLACEMENT, OR RECONSTRUCTION OF DAMAGED DEP GREEN INFRASTRUCTURE ASSETS IMPACTED BY THE PERMITTEE AS DIRECTED BY DEP.

NYC Department of Transportation
Bureau of Permit Management and Construction Control
55 Water Street - 7th Floor, New York, NY 10041
T: 212.839.9637 F: 212.839.8970
www.nyc.gov/dot

I. SPECIAL STIPULATIONS (CONTINUED)

I. **PROTECTION OF NYC DEP PERMEABLE PAVEMENT:** THE PERMITTEE SHALL TAKE PRECAUTION OF NYC DEP PERMEABLE PAVEMENT IN THE RIGHT-OF-WAY. PERMITTEE MUST CONTACT NYC DEP 48 BUSINESS HOURS BEFORE CONSTRUCTION STARTS AT GIUTILITY@DEP.NYC.GOV FOR FURTHER INSTRUCTION ON HOW TO PROCEED. ALSO, THE PERMITTEE MUST FOLLOW NYC DEP GREEN INFRASTRUCTURE PROTECTION REQUIREMENTS AVAILABLE AT **HTTPS://WWW1.NYC.GOV/SITE/DEP/WATER/GREEN-INFRASTRUCTURE.PAGE**. PERMITTEE IS RESPONSIBLE FOR RESTORATION, REPLACEMENT OR RECONSTRUCTION OF DAMAGED DEP GREEN INFRASTRUCTURE ASSETS IMPACTED BY THE PERMITTEE AS DIRECTED BY DEP.

J. **STREETLIGHTS / TRAFFIC SIGNALS:** THE PERMITTEE SHALL NOT REMOVE OR RELOCATE EXISTING STREET LIGHTS OR TRAFFIC SIGNALS WITHOUT FIRST OBTAINING APPROVAL FROM NYC DOT STREET LIGHTING / TRAFFIC SIGNALS UNIT.

K. **TRAFFIC CAMERAS, DETECTION/COMMUNICATION EQUIPMENT:** IF AT ANY TIME DURING THE APPROVED WORK, THE PERMITTEE ENCOUNTERS TRAFFIC SURVEILLANCE CAMERAS, DETECTION EQUIPMENT OR ANY TYPE OF COMMUNICATION EQUIPMENT (WIRELESS OR HARD-WIRED) ON ANY NYC DOT FACILITY, THAT IS NOT INCLUDED ON THE DESIGN/BUILD DRAWINGS, THE PERMITTEE SHALL IMMEDIATELY NOTIFY NYC DOT TRAFFIC MANAGEMENT BY PHONE AT 718-433-3390 OR 718-433-3340 AND VIA EMAIL AT TMC@DOT.NYC.GOV AND AWAIT DIRECTION PRIOR TO CONTINUING WORK.

L. **METERS** – THE PERMITTEE SHALL NOT REMOVE OR RELOCATE PARKING METERS WITHOUT FIRST OBTAINING APPROVAL FROM NYC DOT PARKING METER DIVISION AT 718 – 894 – 8651.

M. **TEST PITS –** THE BELOW TRAFFIC STIPULATIONS DO NOT APPLY TO TEST PIT WORK RELATED TO THIS CONTRACT. WORK HOURS AND OTHER REQUIREMENTS FOR TEST PIT OPERATIONS MAY DIFFER FROM THE STIPULATIONS IDENTIFIED BELOW. THE PERMITTEE SHALL BE REQUIRED TO OBTAIN SEPARATE PERMITS RELATED TO TEST PITS.

N. **NOTIFICATION** – THE PERMITTEE MUST AT LEAST TWO (2) WORKING DAYS BEFORE THE START OF CONSTRUCTION NOTIFY THE NYC FIRE DEPARTMENT, NYC POLICE DEPARTMENT, NYC EMS, LOCAL COMMUNITY BOARD, BOROUGH PRESIDENT'S OFFICE-CHIEF ENGINEER, NYC DOT OCMC OFFICE, AND ALL ABUTTING PROPERTY OWNERS.

O. **TEMPORARY PARKING REGULATIONS/PAVEMENT MARKINGS –** THE PERMITTEE IS REQUIRED TO INSTALL, MAINTAIN AND REMOVE ALL NECESSARY TEMPORARY PARKING AND REGULATORY SIGNS AND PAVEMENT MARKINGS, AND RESTORE THEIR ORIGINAL CONDITION PER NYC DOT STANDARDS, PRIOR TO EXPIRATION OF THEIR PERMIT(S). THE PERMITTEE OR AGENCY PERFORMING PUBLIC OUTREACH SHALL POST AND MAINTAIN ADVISORY SIGNS A MINIMUM OF 48 HOURS PRIOR TO CHANGING EXISTING PARKING REGULATION SIGNS TO APPROVED TEMPORARY CONSTRUCTION PARKING REGULATION SIGNS. THE ADVISORY SIGNS SHOULD BE POSTED ON ALL POLES AND DRIVE RAILS ON THE SEGMENT AFFECTED, INDICATING THE DATE OF THE CHANGE, THE NEW REGULATIONS AND A TELEPHONE NUMBER TO OBTAIN MORE INFORMATION.
   - PER SECTION 2-02 (C)(4) OF THE HIGHWAY RULES, PERMITTEES MUST AFFIX THEIR DEPARTMENT ISSUED FIVE-DIGIT IDENTIFICATION NUMBER USING A WATERPROOF LABEL OR STICKER ON ALL TEMPORARY SIGNS, INCLUDING BUT NOT LIMITED TO TEMPORARY CONSTRUCTION, RAISE PLOW, PARKING OR REGULATORY SIGNS. THE LETTERING MUST BE IN ARIAL FONT, BLACK INK, ¾ INCH IN HEIGHT AND WIDTH, PLACED AT THE LOWER RIGHT-HAND CORNER OF THE FRONT AND THE LOWER LEFT AND RIGHT-HAND CORNERS OF THE BACK OF THE SIGN. THE LABELS/STICKERS MUST BE VISIBLE/LEGIBLE AT ALL TIMES. PERMITTEE MUST REPLACE ANY WORN OR FADED LABELS/STICKERS.

P. **AUTHORIZED PARKING ZONES –** PRIOR TO PERFORMING ANY NON-EMERGENCY WORK WHICH IMPACTS AUTHORIZED PARKING, THE PERMITTEE SHALL NOTIFY AND COORDINATE WITH NYC DOT AUTHORIZED PARKING UNIT AT AUTHORIZEDPARKING@DOT.NYC.GOV PRIOR TO OCCUPYING THESE AREAS. STORAGE OF MATERIAL OR EQUIPMENT DURING NON-WORKING HOURS IN AUTHORIZED PARKING ZONES IS PROHIBITED.

Q. **CONSTRUCTION INFORMATIONAL SIGNS** – THIS PROJECT REQUIRES A CONSTRUCTION PROJECT INFORMATIONAL SIGN (CPIS) IN ACCORDANCE WITH NYC DOT HIGHWAY RULE SECTION 2-02 (4) AND (5). CRITERIA AND A PROTOTYPE FOR THIS SIGN MAY BE FOUND ON THE NYC DOT WEBSITE AT: HTTP://WWW.NYC.GOV/HTML/DOT/DOWNLOADS/PDF/DOT_CPIS_DIRECTIONS.PDF

II. ENHANCED MITIGATIONS

A. **ENHANCED MITIGATIONS FOR PEDESTRIAN FLOW**, INCLUDING METAL FENCING, SHALL BE PROVIDED TO ENSURE PEDESTRIANS STAY WITHIN THEIR DESIGNATED PATH/ROUTE. PEDESTRIAN MANAGERS SHALL BE PROVIDED TO ASSIST WITH PEDESTRIANS AT THE DESIGNATED CROSSWALK AREAS.

B. **"NO STANDING ANYTIME-TEMPORARY CONSTRUCTION" SIGNS** AND TEMPORARY PAVEMENT MARKINGS SHALL BE INSTALLED AND MAINTAINED AS WARRANTED BY THE MAINTENANCE AND PROTECTION OF TRAFFIC (MPT) REQUIRED TO FACILITATE TRAFFIC MOVEMENTS THROUGH THE WORK ZONE. ALL TEMPORARY SIGNS AND PAVEMENT MARKINGS SHALL BE REMOVED UPON COMPLETION OF THE PROJECT.

C. **COMMUNITY OUTREACH** SHALL BE PROVIDED FOR THE DURATION OF THE PROJECT.

III. MAINTENANCE AND PROTECTION OF TRAFFIC

LOCATION A – QUEENS (CB#5)	MAINTENANCE AND PROTECTION OF TRAFFIC
ONDERDONK AVENUE BETWEEN WOODBINE STREET AND PUTNAM AVENUE	1. Must coordinate with the adjacent businesses on the block prior to mobilizing. 2. Work 9am-4pm Monday to Friday. 3. During work hours, maintain one 11 foot travel lane. 4. On the cross maintain a minimum of one 11 foot lane for traffic on one-way streets and a minimum of two lanes for traffic on two-way streets. 5. Have flaggers in the intersection to help direct traffic. 6. The full width of the intersection shall be to traffic when the work site is unattended. 7. Maintain a minimum 5 foot clear sidewalk for pedestrians at all times. 8. Restore all travel lanes to traffic after work hours or when the work site is unattended. 9. The contractor may contain a maximum of 50 linear feet, 8 feet adjacent to the curb during non-work hours. Containment only to restrict parking and for storage of equipment and materials. Use of metered, authorized parking, and no standing zones is prohibited.
SENECA AVENUE BETWEEN WOODBINE STREET AND PUTNAM AVENUE	1. Must coordinate with the adjacent businesses on the block prior to mobilizing. 2. Work 9am-4pm Monday to Friday. 3. During work hours, maintain two travel lanes with one lane in each direction. 4. Have flaggers at each end of the work zone and/or at the end of each block to help direct traffic around the work zone. 5. On the cross maintain a minimum of one 11 foot lane for traffic on one-way streets and a minimum of two lanes for traffic on two-way streets. 6. Have flaggers in the intersection to help direct traffic. 7. The full width of the intersection shall be to traffic when the work site is unattended. 8. Maintain a minimum 5 foot clear sidewalk for pedestrians at all times. 9. Restore all travel lanes to traffic after work hours or when the work site is unattended. 10. The contractor may contain a maximum of 50 linear feet, 8 feet adjacent to the curb during non-work hours. Containment only to restrict parking and for storage of equipment and materials. Use of metered, authorized parking, and no standing zones is prohibited.
MADISON STREET BETWEEN WOODWARD AVENUE AND CYPRESS AVENUE	1. Must coordinate with the adjacent businesses on the block prior to mobilizing. 2. Work 7am-6pm Monday to Friday. 3. During work hours, maintain one 11 foot travel lane. 4. On the cross maintain a minimum of one 11 foot lane for traffic on one-way streets and a minimum of two lanes for traffic on two-way streets. 5. Have flaggers in the intersection to help direct traffic. 6. The full width of the intersection shall be to traffic when the work site is unattended. 7. Maintain a minimum 5 foot clear sidewalk for pedestrians at all times. 8. Restore all travel lanes to traffic after work hours or when the work site is unattended. 9. The contractor may contain a maximum of 50 linear feet, 8 feet adjacent to the curb during non-work hours. Containment only to restrict parking and for storage of equipment and materials. Use of metered, authorized parking, and no standing zones is prohibited.

LOCATION B – BRONX (CB#5,7)	MAINTENANCE AND PROTECTION OF TRAFFIC
EAST FORDHAM ROAD BETWEEN ELM PLACE AND MARION AVENUE **ELM PLACE BETWEEN EAST FORDHAM ROAD AND EAST 188TH STREET (STORAGE ONLY)** **EAST KINGSBRIDGE ROAD BETWEEN EAST FORDHAM ROAD AND EAST FORDHAM ROAD (STORAGE ONLY)**	1. Work hours shall be 21:00 to 5:00 nightly. 2. The contractor shall maintain an 8' width on the sidewalk for pedestrians. 3. During work hours, the contractor may have the following roadway occupancies: • EAST FORDHAM ROAD: Maintain four 11'-wide lanes for traffic and buses. • BAINBRIDGE AVENUE: Maintain one 11'-wide lane. 4. The contractor shall restore the full width of the intersection after work hours. 5. The contractor shall restore the full width of the segments after work hours, but may contain up to 60 linear feet by 8 feet adjacent to the curb after work hours on the following segments: • ELM PLACE BETWEEN EAST FORDHAM ROAD AND EAST 188TH STREET • EAST KINGSBRIDGE ROAD BETWEEN EAST FORDHAM ROAD AND EAST FORDHAM ROAD (NORTH SIDE) 6. The contractor shall maintain access to crosswalks.
BAINBRIDGE AVENUE BETWEEN EAST FORDHAM ROAD AND EAST 194TH STREET **INTERSECTION OF BAINBRIDGE AVENUE AND EAST 194TH STREET** **COLES LANE BETWEEN BAINBRIDGE AVENUE AND EAST KINGSBRIDGE ROAD** **POE PLACE BETWEEN COLES LANE AND DEAD END** **EAST 193RD STREET BETWEEN BAINBRIDGE AVENUE AND MARION AVENUE** **MARION AVENUE BETWEEN DOROTHEA PLACE AND EAST 194TH STREET** **INTERSECTION OF MARION AVENUE AND EAST 193RD STREET**	1. Work hours shall be 8:00 to 18:00 Monday through Friday, and 9:00 to 17:00 Saturday. 2. The contractor shall maintain a 5' width on the sidewalk for pedestrians or a 5'-wide ramped and protected pedestrian walkway in the roadway. 3. The contractor shall maintain one 11'-wide lane for traffic on each segment. On Poe Place, there shall be a minimum 8'-wide lane for local and emergency traffic. On Coles Lane, flaggers shall be posted on both ends of the work zone to direct two-way traffic. The contractor shall maintain two 11'-wide lanes on East 193rd St. and East 194th St. 4. The contractor shall restore the full width of the intersections after work hours. 5. The contractor shall restore the full width of the segments after work hours, but may contain up to 50 linear feet by 8 feet adjacent to the curb after work hours on the following segments: • BAINBRIDGE AVENUE BETWEEN COLES LANE AND EAST 193RD ST. • MARION AVENUE BETWEEN EAST 193RD STREET AND EAST 194TH STREET • BAINBRIDGE AVENUE BETWEEN EAST 193RD STREET AND EAST 194TH STREET 6. The contractor shall maintain access to crosswalks. 7. The contractor shall not work on more than two contiguous segments at a time.

LOCATION C – BRONX (CB#12)	MAINTENANCE AND PROTECTION OF TRAFFIC
INTERSECTION OF PITMAN AVENUE AND GRACE AVENUE **PITMAN AVENUE BETWEEN ELY AVENUE AND BAYCHESTER AVENUE** **INTERSECTION OF PITMAN AVENUE AND EDSON AVENUE** **GRACE AVENUE BETWEEN NEREID AVENUE AND EDENWALD AVENUE** **INTERSECTION OF GRACE AVENUE AND BUSSING AVENUE** **BUSSING AVENUE BETWEEN ELY AVENUE AND BAYCHESTER AVENUE** **INTERSECTION OF EDSON AVENUE AND BUSSING AVENUE** **EDSON AVENUE BETWEEN NEREID AVENUE AND EDENWALD AVENUE**	1. Work hours for segments shall be 8:00 to 18:00 Monday through Friday, and 9:00 to 17:00 Saturday. Work hours for intersections shall be 9:00 to 18:00 Monday through Friday, and 9:00 to 17:00 Saturday and Sunday. Work hours for the following segments when school is in session shall be 9:00 to 14:00 and 16:00 to 22:00 Monday through Friday. • BUSSING AVENUE BETWEEN GRACE AVENUE AND EDSON AVENUE • GRACE AVENUE BETWEEN PITMAN AVENUE AND BUSSING AVENUE • EDSON AVENUE BETWEEN PITMAN AVENUE AND BUSSING AVENUE • INTERSECTION OF GRACE AVENUE AND BUSSING AVENUE • INTERSECTION OF EDSON AVENUE AND BUSSING AVENUE 2. The contractor shall maintain a 5' width on the sidewalk for pedestrians or a 5'-wide ramped and protected pedestrian walkway in the roadway. 3. The contractor shall maintain two 11'-wide lanes, one in each direction, at all times. 4. The contractor may contain up to 50 linear feet by 8 feet adjacent to the curb after work hours on the segments. 5. The contractor shall restore the full width of the intersection after work hours. 6. The contractor shall maintain access to at least one crosswalk per corner. 7. The contractor shall not work on more than two contiguous segments at a time.

LOCATION D – QUEENS (CB#12)	MAINTENANCE AND PROTECTION OF TRAFFIC
MERRICK BOULEVARD BETWEEN 119TH AVENUE AND 127TH AVENUE	1. Working hours shall be as follows: 9:00 AM to 6:00 PM, Monday - Friday. 8:00 AM to 6:00 PM, Saturday 2. The contractor shall occupy twelve (12) foot width of the roadway during working. 3. The contractor shall restore all travel lanes after working hours. 4. The contractor shall occupy eight (8) feet adjacent to the curb for fifty linear feet for storage. 5. The contractor shall maintain a minimum 5-foot clear path on the sidewalk for pedestrian access at all times. 6. The contractor shall maintain all crosswalks during and after working hours. 7. The contractor shall maintain access to driveways of all property owners on the affected street segment.
INTERSECTION OF MERRICK BOULEVARD AND SUNBURY ROAD **INTERSECTION OF MERRICK BOULEVARD AND URSINA ROAD/125TH AVENUE** **INTERSECTION OF MERRICK BOULEVARD AND126TH AVENUE/LESLIE ROAD**	1. Working hours shall be as follows: 9:00 AM to 6:00 PM, Monday - Friday. 8:00 AM to 6:00 PM, Saturday 2. The contractor on Merrick Boulevard, shall occupy twelve (12) foot width of the roadway and on all cross streets maintain one 12-foot travel lane for local and emergency access during working. 3. The contractor shall restore full width of roadway after working hours. 4. The contractor shall maintain a minimum 5-foot clear path on the sidewalk for pedestrian access at all times.
BAISLEY BOULEVARD BETWEEN MERRILL STREET AND 178TH STREET	1. Working hours shall be as follows: 9:00 AM to 6:00 PM, Monday - Friday. 8:00 AM to 6:00 PM, Saturday 2. The contractor shall maintain two 11-foot travel lanes, one 11- foot travel lane in each direction during working. 3. The contractor shall restore all travel lanes after working hours. 4. The contractor shall occupy eight (8) feet adjacent to the curb for fifty linear feet for storage. 5. The contractor shall maintain a minimum 5-foot clear path on the sidewalk for pedestrian access at all times. 6. The contractor shall maintain all crosswalks during and after working hours. 7. The contractor shall maintain access to driveways of all property owners on the affected street segment.
INTERSECTION OF BAISLEY BOULEVARD AND MERRILL STREET	1. Working hours shall be as follows: 9:00 AM to 6:00 PM, Monday - Friday. 8:00 AM to 6:00 PM, Saturday 2. The contractor shall maintain on Baisley Boulevard, two 11-foot travel lanes, one 11- foot travel lane in each direction and on Merrill Street maintain one 12-foot travel lane for local and emergency access during working. 3. The contractor shall restore full width of roadway after working hours. 4. The contractor shall maintain a minimum 5-foot clear path on the sidewalk for pedestrian access at all times
INTERSECTION OF MERRICK BOULEVARD AND BAISLEY BOULEVARD	1. Working hours shall be as follows: 9:00 AM to 6:00 PM, Monday - Friday. 8:00 AM to 6:00 PM, Saturday 2. The contractor shall maintain on Baisley Boulevard and 120th Avenue, two 11-foot travel lanes, one 11- foot travel lane in each direction during working. 3. The contractor shall restore full width of roadway after working hours. 4. The contractor shall maintain a minimum 5-foot clear path on the sidewalk for pedestrian access at all times
INTERSECTION OF BAISLEY BOULEVARD AND 120TH AVENUE	1. Working hours shall be as follows: 9:00 AM to 6:00 PM, Monday - Friday. 8:00 AM to 6:00 PM, Saturday 2. The contractor shall maintain on Baisley Boulevard and 120th Avenue, two 11-foot travel lanes, one 11- foot travel lane in each direction during working. 3. The contractor shall restore full width of roadway after working hours. 4. The contractor shall maintain a minimum 5-foot clear path on the sidewalk for pedestrian access at all times

IRWIN PLACE BETWEEN 120TH AVENUE AND TROUTVILLE ROAD **ROE ROAD BETWEEN IRWIN PLACE AND 120TH AVENUE** **SUNBURY ROAD BETWEEN MERRICK BOULEVARD AND 120TH AVENUE** **125TH AVENUE BETWEEN MERRICK BOULEVARD AND MERRILL STREET** **URSINA ROAD BETWEEN MERRICK BOULEVARD AND IRWIN PLACE** **126TH AVENUE BETWEEN MERRICK BOULEVARD AND 174TH PLACE** **LESLIE ROAD BETWEEN MERRICK BOULEVARD AND IRWIN PLACE**	1. Working hours shall be as follows: 7:00 AM to 6:00 PM, Monday - Friday. 8:00 AM to 6:00 PM, Saturday 2. The contractor shall maintain one 11-foot travel lane for local and emergency access at all times during working. 3. The contractor shall restore all travel lanes after working hours. 4. The contractor shall maintain a minimum 5-foot clear path on the sidewalk for pedestrian access at all times. 5. The contractor shall maintain all crosswalks during and after working hours. 6. The contractor shall maintain access to driveways of all property owners on the affected street segment.
INTERSECTION OF IRWIN PLACE AND ROE ROAD **INTERSECTION OF IRWIN PLACE AND SUNBURY ROAD** **INTERSECTION OF IRWIN PLACE AND URSINA ROAD**	1. Working hours shall be as follows: 9:00 AM to 6:00 PM, Monday - Friday. 8:00 AM to 6:00 PM, Saturday 2. The contractor shall maintain on both cross streets, one 11-foot travel lane for local and emergency access during working. 3. The contractor shall restore full width of roadway after working hours. 4. The contractor shall maintain a minimum 5-foot clear path on the sidewalk for pedestrian access at all times
INTERSECTION OF IRWIN PLACE AND 120TH AVENUE **INTERSECTION OF ROE ROAD AND 120TH AVENUE** **INTERSECTION OF SUNBURY ROAD AND 120TH AVENUE**	1. Working hours shall be as follows: 9:00 AM to 6:00 PM, Monday - Friday. 8:00 AM to 6:00 PM, Saturday 2. The contractor shall maintain on 120th Avenue, two 11-foot travel lanes, one 11- foot travel lane in each direction and on all cross streets maintain one 11-foot travel lane for local and emergency access during working. 3. The contractor shall restore full width of roadway after working hours. 4. The contractor shall maintain a minimum 5-foot clear path on the sidewalk for pedestrian access at all times

LOCATION E – QUEENS (CB#7)	MAINTENANCE AND PROTECTION OF TRAFFIC
COLLEGE POINT BOULEVARD BETWEEN FOWLER AVENUE AND 41 AVENUE	1. Must coordinate with the adjacent businesses on the block prior to mobilizing. 2. Work 9:30am-4pm Monday to Friday and 8am-1:30pm Saturday and Sunday. 3. During work hours, maintain four 11 foot travel lanes with two lanes in each direction. 4. Have flaggers at each end of the work zone and/or at the end of each block to help direct traffic around the work zone. 5. On the cross streets, maintain a minimum of one 11 foot lane for traffic on one-way streets and a minimum of two lanes for traffic on two-way streets. 6. Have flaggers in the intersection to help direct traffic. 7. The full width of the intersection shall be opened to traffic when the work site is unattended. 8. Maintain a minimum 7 foot clear sidewalk for pedestrians at all times. 9. Restore all travel lanes to traffic after work hours or when the work site is unattended. 10. The contractor may contain a maximum of 50 linear feet, 8 feet adjacent to the curb during non-work hours. Containment only to restrict parking and for storage of equipment and materials. Use of metered, authorized parking, and no standing zones is prohibited.

AVERY AVENUE BETWEEN 131 STREET AND COLLEGE POINT BOULEVARD	1. Must coordinate with the adjacent businesses on the block prior to mobilizing. 2. Work 9am-4pm Monday to Friday, 5am-11:30am Saturday and Sunday, and 9:30pm-5am nightly. 3. During work hours, maintain one 11 foot travel lane. 4. On the cross streets – with the exception of College Point Boulevard where two 11 foot lanes for traffic shall be maintained in each direction – maintain a minimum of one 11 foot lane for traffic on one-way streets and a minimum of two lanes for traffic on two-way streets. 5. Have flaggers in the intersection to help direct traffic. 6. The full width of the intersection shall be opened to traffic when the work site is unattended. 7. Maintain a minimum 5 foot clear sidewalk for pedestrians at all times. 8. Restore all travel lanes to traffic after work hours or when the work site is unattended. 9. The contractor may contain a maximum of 50 linear feet, 8 feet adjacent to the curb during non-work hours. Containment only to restrict parking and for storage of equipment and materials. Use of metered, authorized parking, and no standing zones is prohibited.
AVERY AVENUE BETWEEN COLLEGE POINT BOULEVARD AND SAULL STREET **POPLE STREET BETWEEN COLLEGE POINT BOULEVARD AND SAULL STREET** **HAIGHT STREET BETWEEN MAPLE AVENUE AND 41 AVENUE**	1. Must coordinate with the adjacent businesses on the block prior to mobilizing. 2. Work 7am-6pm Monday to Friday. 3. During work hours, maintain one 11 foot travel lane. 4. On the cross streets – with the exception of College Point Boulevard where two 11 foot lanes for traffic shall be maintained in each direction – maintain a minimum of one 11 foot lane for traffic on one-way streets and a minimum of two lanes for traffic on two-way streets. 5. Have flaggers in the intersection to help direct traffic. 6. The full width of the intersection shall be opened to traffic when the work site is unattended. 7. Maintain a minimum 5 foot clear sidewalk for pedestrians at all times. 8. Restore all travel lanes to traffic after work hours or when the work site is unattended. 9. The contractor may contain a maximum of 50 linear feet, 8 feet adjacent to the curb during non-work hours. Containment only to restrict parking and for storage of equipment and materials. Use of metered, authorized parking, and no standing zones is prohibited.
MAPLE AVENUE BETWEEN COLLEGE POINT BOULEVARD AND SAULL STREET **41 ROAD BETWEEN COLLEGE POINT BOULEVARD AND FRAME PLACE**	1. Must coordinate with the adjacent businesses on the block prior to mobilizing. 2. Work 7am-6pm Monday to Friday. 3. During work hours, maintain one 11 foot travel lane. 4. On the cross streets – with the exception of College Point Boulevard where two 11 foot lanes for traffic shall be maintained in each direction – maintain a minimum of one 11 foot lane for traffic on one-way streets and a minimum of two lanes for traffic on two-way streets. 5. Have flaggers in the intersection to help direct traffic. 6. The full width of the intersection shall be to traffic when the work site is unattended. 7. Maintain a minimum 5 foot clear sidewalk for pedestrians at all times. 8. Restore all travel lanes to traffic after work hours or when the work site is unattended. 9. The contractor may contain a maximum of 50 linear feet, 8 feet adjacent to the curb during non-work hours. Containment only to restrict parking and for storage of equipment and materials. Use of metered, authorized parking, and no standing zones is prohibited.

SANFORD AVENUE BETWEEN DELONG STREET AND FULLER PLACE **41 AVENUE BETWEEN DELONG STREET AND FULLER PLACE** **DELONG STREET BETWEEN 41 AVENUE AND SANFORD AVENUE** **FULLER PLACE BETWEEN 41 AVENUE AND MAPLE AVENUE**	1. Must coordinate with the adjacent businesses on the block prior to mobilizing. 2. Work 9am-4pm Monday to Friday, 6am-7pm Saturday and Sunday, and 9:30pm-5am nightly. 3. During work hours, maintain one 11 foot lane for two-way thru traffic with flaggers on each end of the block. 4. On the cross streets – with the exception of College Point Boulevard where two 11 foot lanes for traffic shall be maintained in each direction – maintain a minimum of one 11 foot lane for traffic on one-way streets and a minimum of two lanes for traffic on two-way streets. 5. Have flaggers in the intersection to help direct traffic. 6. The full width of the intersection shall be restored to traffic when the work site is unattended. 7. Maintain a minimum 5 foot clear sidewalk for pedestrians at all times. 8. Restore all travel lanes to traffic after work hours or when the work site is unattended. 9. The contractor may contain a maximum of 50 linear feet, 8 feet adjacent to the curb during non-work hours. Containment only to restrict parking and for storage of equipment and materials. Use of metered, authorized parking, and no standing zones is prohibited.
MAPLE AVENUE BETWEEN SANFORD AVENUE AND COLLEGE POINT BOULEVARD	1. Must coordinate with the adjacent businesses on the block prior to mobilizing. 2. Work 7am-6pm Monday to Friday and 8am-5pm Saturday. 3. During work hours, maintain one 11 foot travel lane. 4. On the cross streets – with the exception of College Point Boulevard where two 11 foot lanes for traffic shall be maintained in each direction – maintain a minimum of one 11 foot lane for traffic on one-way streets and a minimum of two lanes for traffic on two-way streets. 5. Have flaggers in the intersection to help direct traffic. 6. The full width of the intersection shall be restored to traffic when the work site is unattended. 7. Maintain a minimum 5 foot clear sidewalk for pedestrians at all times. 8. Restore all travel lanes to traffic after work hours or when the work site is unattended. 9. The contractor may contain a maximum of 50 linear feet, 8 feet adjacent to the curb during non-work hours. Containment only to restrict parking and for storage of equipment and materials. Use of metered, authorized parking, and no standing zones is prohibited.
SANFORD AVENUE BETWEEN FULLER PLACE AND COLLEGE POINT BOULEVARD	1. Must coordinate with the adjacent businesses on the block prior to mobilizing. 2. Work 7am-6pm Monday to Friday, 6am-7pm Saturday and Sunday, and 9:30pm-5am nightly. 3. During work hours, maintain one 11 foot travel lane. 4. On the cross streets – with the exception of College Point Boulevard where two 11 foot lanes for traffic shall be maintained in each direction – maintain a minimum of one 11 foot lane for traffic on one-way streets and a minimum of two lanes for traffic on two-way streets. 5. Have flaggers in the intersection to help direct traffic. 6. The full width of the intersection shall be restored to traffic when the work site is unattended. 7. Maintain a minimum 5 foot clear sidewalk for pedestrians at all times. 8. Restore all travel lanes to traffic after work hours or when the work site is unattended. 9. The contractor may contain a maximum of 50 linear feet, 8 feet adjacent to the curb during non-work hours. Containment only to restrict parking and for storage of equipment and materials. Use of metered, authorized parking, and no standing zones is prohibited.

SANFORD AVENUE BETWEEN COLLEGE POINT BOULEVARD AND FRAME PLACE	1. Must coordinate with the adjacent businesses on the block prior to mobilizing. 2. Work 9am-4pm Monday to Friday. 3. During work hours, maintain one 11 foot travel lane. 4. On the cross streets – with the exception of College Point Boulevard where two 11 foot lanes for traffic shall be maintained in each direction – maintain a minimum of one 11 foot lane for traffic on one-way streets and a minimum of two lanes for traffic on two-way streets. 5. Have flaggers in the intersection to help direct traffic. 6. The full width of the intersection shall be to traffic when the work site is unattended. 7. Maintain a minimum 5 foot clear sidewalk for pedestrians at all times. 8. Restore all travel lanes to traffic after work hours or when the work site is unattended. 9. The contractor may contain a maximum of 50 linear feet, 8 feet adjacent to the curb during non-work hours. Containment only to restrict parking and for storage of equipment and materials. Use of metered, authorized parking, and no standing zones is prohibited.

LOCATION F – QUEENS (CB#12)	MAINTENANCE AND PROTECTION OF TRAFFIC
FARMERS BOULEVARD BETWEEN MANGIN AVENUE AND 113TH AVENUE	1. Working hours shall be as follows: 9:00 AM to 6:00 PM, Monday - Friday. 8:00 AM to 6:00 PM, Saturday 2. The contractor shall maintain two 11-foot travel lanes, one 11- foot travel lane in each direction during working. 3. The contractor shall restore all travel lanes after working hours. 4. The contractor shall occupy eight (8) feet adjacent to the curb for fifty linear feet for storage. 5. The contractor shall maintain a minimum 5-foot clear path on the sidewalk for pedestrian access at all times. 6. The contractor shall maintain all crosswalks during and after working hours. 7. The contractor shall maintain access to driveways of all property owners on the affected street segment.
INTERSECTION OF FARMERS BOULEVARD AND 111TH ROAD **INTERSECTION OF FARMERS BOULEVARD AND 112TH AVENUE** **INTERSECTION OF FARMERS BOULEVARD AND 112TH ROAD**	1. Working hours shall be as follows: 9:00 AM to 6:00 PM, Monday - Friday. 8:00 AM to 6:00 PM, Saturday 2. The contractor shall maintain on Farmers Boulevard, two 11-foot travel lanes, one 11- foot travel lane in each direction and on all cross streets maintain one 12-foot travel lane for local and emergency access during working. 3. The contractor shall restore full width of roadway after working hours. 4. The contractor shall maintain a minimum 5-foot clear path on the sidewalk for pedestrian access at all times.
111TH ROAD BETWEEN FARMERS BOULEVARD AND 196TH STREET **112TH AVENUE BETWEEN FARMERS BOULEVARD AND 196TH STREET** **112TH ROAD BETWEEN FARMERS BOULEVARD AND 196TH STREET**	1. Working hours shall be as follows: 7:00 AM to 6:00 PM, Monday thru Friday. 2. The contractor shall maintain one 11-foot travel lane for local and emergency traffic during working hours. 3. The contractor shall restore all travel lanes after working hours. 4. The contractor shall maintain a 5-foot clear sidewalk for pedestrians at all times.
INTERSECTION OF 196TH STREET AND 111TH ROAD **INTERSECTION OF 196TH STREET AND 112TH AVENUE** **INTERSECTION OF 196TH STREET AND 112TH ROAD**	1. Working hours shall be as follows: 9:00 AM to 400 PM, Monday thru Friday. 2. The contractor shall maintain on 196th Street and all cross streets, one 11-foot travel lane for local and emergency traffic during working hours. 3. The contractor shall restore full width of the roadway after working hours. 4. The contractor shall maintain a 5-foot clear sidewalk for pedestrians at all times.

IV. GENERAL NOTES

A. **THIS IS NOT A PERMIT**. THIS STIPULATION SHEET MUST BE SUBMITTED WITH ALL REQUESTS FOR PERMITS PERTAINING TO THE ABOVE CONTRACT AND PRESENT AT THE WORK SITE ALONG WITH ALL ACTIVE CONSTRUCTION PERMITS WHEN THE APPROVED WORK IS BEING PERFORMED.

B. THE PERMITTEE MUST COMPLY WITH ALL CONSTRUCTION EMBARGOS ISSUED BY THE NYC DOT INCLUDING THE HOLIDAY EMBARGO.

C. THE PERMITTEE SHALL COMPLY WITH ALL REQUIREMENTS OF THE NYC DOT SPECIAL EVENTS UNIT AS IDENTIFIED BELOW:

1. STREET FAIRS / FESTIVALS
   - ALL EXCAVATIONS MUST BE PLATED WITH SKID RESISTANT PLATES.
   - PLATES MUST BE RECESSED AND FLUSH WITH PAVEMENT.
   - ALL PAVEMENT DEFECTS MUST BE CORRECTED WITHIN OR ADJACENT TO THE WORK ZONE.
   - THE CONTRACTOR IS RESPONSIBLE FOR ANY DEFECTS WITHIN THE IMMEDIATE VICINITY IF NYC DOT STREET & ARTERIAL MAINTENANCE CANNOT MAKE REPAIRS DUE TO PROJECT INTERFERENCE (AS DETERMINED BY NYC DOT).
   - ALL EQUIPMENT, TRAILERS AND MATERIAL STORAGE MUST BE REMOVED.

2. RUNNING / WALKING / BIKING EVENTS
   - ALL EXCAVATIONS MUST BE BACKFILLED AND PAVED OR PLATES MUST BE RECESSED AND PAVED OVER FLUSH WITH PAVEMENT.
   - ALL PAVEMENT DEFECTS MUST BE CORRECTED WITHIN OR ADJACENT TO THE WORK ZONE.
   - THE CONTRACTOR IS RESPONSIBLE FOR ANY DEFECTS WITHIN THE IMMEDIATE VICINITY IF NYC DOT STREET & ARTERIAL MAINTENANCE CANNOT MAKE REPAIRS DUE TO PROJECT INTERFERENCE (AS DETERMINED BY NYC DOT).
   - ALL EQUIPMENT, TRAILERS AND MATERIAL STORAGE MUST BE REMOVED.

3. PARADES
   - ALL EXCAVATIONS MUST BE BACKFILLED AND PAVED OR PLATES MUST BE RECESSED AND PAVED OVER FLUSH WITH PAVEMENT.
   - FORMATION AND DISPERSAL AREA PLATES MUST BE RECESSED AND FLUSH WITH PAVEMENT (PLATES MUST BE SKID RESISTANT).
   - ALL PAVEMENT DEFECTS MUST BE CORRECTED WITHIN OR ADJACENT TO THE WORK ZONE.
   - THE CONTRACTOR IS RESPONSIBLE FOR ANY DEFECTS WITHIN THE IMMEDIATE VICINITY IF NYC DOT STREET & ARTERIAL MAINTENANCE CANNOT MAKE REPAIRS DUE TO PROJECT INTERFERENCE (AS DETERMINED BY NYC DOT).
   - ALL EQUIPMENT, TRAILERS AND MATERIAL STORAGE MUST BE REMOVED.

4. MAYORAL EVENTS
   - ALL EXCAVATIONS MUST BE BACKFILLED AND PAVED OR PLATES MUST BE RECESSED AND PAVED OVER FLUSH WITH PAVEMENT.
   - ALL PAVEMENT DEFECTS MUST BE CORRECTED WITHIN OR ADJACENT TO THE WORK ZONE.
   - THE CONTRACTOR IS RESPONSIBLE FOR ANY DEFECTS WITHIN THE IMMEDIATE VICINITY IF NYC DOT STREET & ARTERIAL MAINTENANCE CANNOT MAKE REPAIRS DUE TO PROJECT INTERFERENCE (AS DETERMINED BY NYC DOT).
   - ALL EQUIPMENT, TRAILERS AND MATERIAL STORAGE MUST BE REMOVED.

D. ALL RELOCATION WORK BY THE UTILITIES SUCH AS; CON EDISON, TELEPHONE, GAS AND CABLE COMPANIES SHALL PRECEDE THE CONTRACTORS' START OF WORK ON ALL AFFECTED ROADWAYS IN THE IMPACTED CONTRACT AREA.

E. THE CONTRACTOR IS ADVISED THAT OTHER CONTRACTORS MAY BE WORKING IN THE GENERAL AREA DURING THE TERM OF THIS STIPULATION. IN WHICH EVENT, THE CONTRACTOR MAY REQUIRE MODIFICATIONS BY THE OCMC-STREETS.

F. THE PERMITTEE IS NOT AUTHORIZED TO ENTER, OCCUPY OR USE ANY PUBLICLY OWNED OR PRIVATELY OWNED, NON-PAVED, LANDSCAPE OR NON-LANDSCAPED LOCATION WITHOUT SPECIFIC WRITTEN PERMISSION. WHEN THE LOCATION IS WITHIN THE RIGHT-OF-WAY OF A LIMITED-ACCESS ARTERIAL HIGHWAY, WRITTEN APPROVAL FROM THE NYC DOT OCMC-HIGHWAYS IS REQUIRED. WHEN THE LOCATION IS WITHIN THE RIGHT-OF-WAY OF A PUBLIC STREET OR PUBLIC PARK, WRITTEN APPROVAL FROM THE NEW YORK CITY DEPARTMENT OF TRANSPORTATION OR NEW YORK CITY DEPARTMENT OF PARKS AND RECREATION IS REQUIRED. WHEN THE LOCATION IS WITHIN THE RIGHT-OF-WAY OF ANY OTHER JURISDICTION SUCH AS PRIVATE PROPERTY, STATE, FEDERAL ETC., IT IS THE PERMITTEE'S RESPONSIBILITY TO DETERMINE THE PROPERTY OWNER AND OBTAIN THE WRITTEN APPROVAL.

G. THE PERMITTEE SHALL ADHERE TO THE NYC DOT BUREAU OF BRIDGES' SPECIAL PROVISIONS FOR LANDSCAPE PROTECTION, MAINTENANCE AND RESTORATION, ITEMS 1.18.15 THROUGH 1.18.19, WHENEVER AND WHEREVER ANY OF THE PERMITTEE'S ACTIVITIES OCCUR WITHIN A LIMITED ACCESS ARTERIAL HIGHWAY RIGHT - OF - WAY.

H. NO DEVIATION OR DEPARTURE FROM THESE STIPULATIONS WILL BE PERMITTED WITHOUT THE PRIOR WRITTEN APPROVAL FROM THE OCMC-STREETS. REQUEST FOR SUCH MODIFICATIONS SHALL BE SUBMITTED TO THE OFFICE OF THE OCMC-STREETS, NEW YORK CITY DEPARTMENT OF TRANSPORTATION, A MINIMUM OF TWENTY (20) DAYS IN ADVANCE FOR CONSIDERATION.

IV. GENERAL NOTES (CONTINUED)

I. FOR ANY CONSTRUCTION ACTIVITY RESULTING IN THE FULL CLOSURE OF A ROADWAY FOR MORE THAN 180 CONSECUTIVE CALENDAR DAYS, THE CONTRACTOR MUST PRODUCE AND SUBMIT A COMMUNITY REASSESSMENT, IMPACT AND AMELIORATION (CRIA) STATEMENT TO NYC DOT PLANNING AND OBTAIN THEIR APPROVAL BEFORE APPLYING FOR PERMITS, IN COMPLIANCE WITH THE PROVISIONS OF LOCAL LAW 24 STREET CLOSURE LAW.

J. FOR THIS PROJECT THE CONTRACTOR SHALL FURNISH, INSTALL AND MAINTAIN ALL NECESSARY ADVANCE WARNING AND DETOUR SIGNS, TEMPORARY CONTROL DEVICES, BARRICADES, LIGHTS AND FLASHING ARROW BOARDS IN ACCORDANCE WITH THE "MANUAL ON UNIFORM TRAFFIC CONTROL DEVICES," THE TYPICAL SCHEMES INCLUDED IN THIS SPECIFICATION; AND AS ORDERED BY THE ENGINEER-IN-CHARGE AND THE OCMC-STREETS.

K. THE CONTRACTOR SHALL BE RESPONSIBLE FOR IDENTIFYING HIS CONSTRUCTION SIGNAGE. THE IDENTIFICATION SHALL INCLUDE THE CONTRACTOR'S NAME, SPONSORING AGENCY NAME AND THE CONTRACT NUMBER. THE IDENTIFICATION SHALL BE PLACED ON THE BACK OF THE SIGN. THE LETTERING SHALL BE THREE (3) INCHES HIGH.

L. THE OCMC-STREETS RESERVES THE RIGHT TO VOID OR MODIFY THESE STIPULATIONS SHOULD CONSTRUCTION FAIL TO COMMENCE WITHIN TWO (2) YEARS OF THE SIGNED DATE OF THESE STIPULATIONS.

Steve Pinkus

STEPHEN PINKUS
PROJECT MANAGER – QUEENS (CB#5 & 7)
OCMC-STREETS

Duane Barra

DUANE BARRA
DIRECTOR
OCMC-STREETS

Xiomara Aguilera

XIOMARA AGUILERA
PROJECT MANAGER – QUEENS (CB#12)
OCMC-STREETS

Alex Lubman

ALEX LUBMAN
PROJECT MANAGER – BRONX
OCMC-STREETS

LANDMARKS PRESERVATION COMMISSION
ELECTRONIC APPROVAL - 06/28/2024 - FM

THE NEW YORK CITY LANDMARKS PRESERVATION COMMISSION
1 CENTRE STREET 9TH FLOOR NORTH NEW YORK NY 10007
TEL: 212 669-7700 FAX: 212 669-7780

BINDING REPORT

ISSUE DATE:	EXPIRATION DATE:	DOCKET #:	REPORT #:
06/28/24	6/28/2030	LPC-24-11932	SRB-24-11932

ADDRESS:	BOROUGH:	BLOCK/LOT:
N/A	Queens	/
Sidewalks - Multiple Ridgewood South Historic District		

To the Mayor, the Council, and the DDC c/o Joseph LePique

This report is issued pursuant to Sections 3020 and 854 (h) of the New York City Charter and Section 25-318 of the Administrative Code of the City of New York, which require a report from the Landmarks Preservation Commission for certain plans for the construction, reconstruction, alteration, or demolition of any improvement or proposed improvement which is owned by the City or is to be constructed upon property owned by the City and is or is to be located on a landmark site or in a historic district or which contains an interior landmark.

The Landmarks Preservation Commission has reviewed a proposal for the installation and relocation of multiple fire hydrants in the Ridgewood South Historic District.

The proposed work consists of removing multiple existing fire hydrants; installing multiple A.P. Smith Design fire hydrants with decorative caps; and replacing all affected sidewalks with new concrete sidewalks in-kind, tinted and scored to match the adjacent sidewalks; as described in written specifications; and as shown on existing condition photographs; and shown in drawings labeled “Hydrant-Fender-Cap In Historic Districts”, “Standard Double Nozzle Hydrant Type S-2-LP” and sheets 1 through 4 of Project ID: QED1063AC, dated June 4, 20, prepared by Department of Design and Construction and submitted as components of the application.

With regard to this proposal, the Commission finds that the work is in accordance with the provisions set forth in Title 63 of the Rules of the City of New York, Section 2-19 for Sidewalks, including Section 2-19(c) for replacement of existing non-bluestone sidewalk. Based on these findings, the work is approved.

Please see Title 63 of the Rules of the City of New York for complete text of any cited Rule section(s):

LANDMARKS PRESERVATION COMMISSION
ELECTRONIC APPROVAL - 06/28/2024 - FM

http://www1.nyc.gov/site/lpc/applications/rules-guides.page

This report is issued on the basis of the building and/or site conditions described in the application and disclosed during the review process. By accepting this report, the applicant agrees to notify the Commission if the actual building or site conditions vary or if original or historic architectural fabric is discovered. The Commission reserves the right to amend or revoke this report, upon written notice to the applicant, in the event that the actual building or site conditions are materially different from those described in the application or disclosed during the review process.

The approved documents, and Department of Buildings filing drawings where applicable, are marked as approved by the Commission, with the date of the approval indicated. The work is limited to what is contained in the approved documents and referenced in the approval. Other work or amendments to this filing must be reviewed and approved separately. A copy of this report must be prominently displayed at the site while work is in progress. Please direct inquiries to Fred Metzger.

Sarah Carroll
Chair

PLEASE NOTE: APPROVED DOCUMENTS, DEPARTMENT OF BUILDINGS FILING DRAWINGS WHERE APPLICABLE, AND A COPY OF THIS REPORT HAVE BEEN PROVIDED TO:

cc: Jared Knowles, Deputy Director; Joseph LePique, NYC Department of Design + Construction

10. **QED1063AC PHASING CHART**

Drawing No.	Location	Streets	Borough	Phase
UP1	A - 1	MADISON STREET, ONDERDONK AVENUE	Queens	1
UP2	A - 2	MADISON STREET, SENECA AVE	Queens	1
UP3	B - 1	EAST FORDHAM ROAD, BAINBRIDGE AVENUE, COLES LANE, POE PLACE	Bronx	1
UP4	B - 2	EAST 193RD STREET, EAST 194TH STREET, BAINBRIDGE AVENUE, MARION AVENUE	Bronx	1
UP5	C - 1	GRACE AVENUE, EDSON AVENUE, PITMAN AVENUE	Bronx	1
UP6	C - 2	GRACE AVENUE, EDSON AVENUE, BUSSING AVENUE	Bronx	1
UP7	D - 1	BAISLEY BOULEVARD, SUNBURY ROAD, MERRICK BOULEVARD	Queens	1
UP8	D - 2	URSINA ROAD, 125TH AVENUE, LESLIE ROAD, MERRICK BOULEVARD	Queens	1
UP9	D - 3	IRWIN PLACE, 120TH AVENUE, ROE ROAD, SUNBURY ROAD	Queens	1
UP10	E - 1	AVERY AVENUE	Queens	1
UP11	E - 2	COLLEGE POINT BOULEVARD, POPLE AVENUE, AVERY AVENUE	Queens	1
UP12	E - 3	FULLER PLACE, HAIGHT STREET, COLLEGE POINT BOULEVARD, SANFORD AVENUE, MAPLE AVENUE	Queens	3
UP13	E - 4	COLLEGE POINT BOULEVARD, 41ST AVENUE, 41ST ROAD	Queens	3
UP14	E - 5	DELONG STREET, 41ST AVENUE, SANFORD AVENUE	Queens	1
UP15	F - 1	FARMERS BOULEVARD, 111TH ROAD	Queens	1
UP16	F - 2	194TH STREET, 196TH STREET, 111TH AVENUE, 111TH ROAD	Queens	1
UP17	F - 3	FARMERS BOULEVARD, 112TH AVENUE, 112TH ROAD	Queens	1
UP18	F - 4	194TH STREET, 196TH STREET, 112TH AVENUE, 112TH ROAD	Queens	1

(C) SEWER & WATER MAIN PROJECT SPECIFIC PROVISIONS

(NO TEXT)

(D) GREEN INFRASTRUCTURE PROVISIONS

(NO TEXT)

SW - PAGES

SEWER AND WATER MAIN REVISIONS TO SPECIFICATIONS

NOTICE

The Standard Sewer And Water Main Specifications of the Department of Environmental Protection, Sewer Design Standards of the Department of Environmental Protection, Water Main Standard Drawings of the Department of Environmental Protection, Specifications For Trunk Main Work of the Department of Environmental Protection and the Standard Highway Specifications of the Department of Transportation of The City of New York, must be included as part of the contract documents. These said specifications and standard drawings are hereby revised under the following section headings:

A. NOTICE TO BIDDERS
B. REVISIONS TO THE STANDARD SEWER AND WATER MAIN SPECIFICATIONS
C. REVISIONS TO THE SPECIFICATIONS FOR TRUNK MAIN WORK

(NO TEXT ON THIS PAGE)

A. NOTICE TO BIDDERS

1. The Contractor is hereby notified that a new scope of lead water service line replacement is added to the contract and all LSLR work must be in compliance with the new section SECTION 64.14 LEAD SERVICE LINE REPLACEMENT which is included herein SW Pages under Section B in subsection (10).

   Prior to the start of any water main work, the Contractor must perform service line investigation/survey and LSLR identification report of all water service connections encountered within the project limits and report to the Engineer. Information is also available in the DEP website: nyc.gov/leadpipe.

   The Contractor is advised that the cost of Lead Service Line Replacement (LSLR) work, as per the specifications and as ordered by the Engineer, including investigation/survey, identification report, all materials, equipment and labor necessary to complete the work will be deemed included and paid under the bid items 64.14A, 64.14AL, 64.14AM, 64.14B, 64.14BL, 64.14BM, 64.14V, 4.02 AG,4.13 AAS, 4.13BAS, 4.20, and 6.27 A. No separate payment will be made.

2. Any damage to existing city-owned structures caused by the Contractor's construction operations must be repaired or replaced as directed by the Engineer. The cost of such repair or replacement will be borne solely at the Contractor's own expense.

B. REVISIONS TO THE STANDARD SEWER AND WATER MAIN SPECIFICATIONS

(1) **Refer** to **Subsection 10.15 - Notice To Utility Companies, Etc., To Remove Structures Occupying Place Of Sewers, Water Mains Or Appurtenances**, Page 19:
Add the following to **Subsection 10.15**:

The concerned utility companies are listed in the utility packages herein Volume 3 of 3.

(2) **Refer** to **Subsection 10.21 - Contractor To Notify City Departments**, Page 21:
Add the following to **Subsection 10.21**:

(1) N.Y.C. D.E.P., BUREAU OF WATER AND SEWERS OPERATIONS

The Contractor must notify Mr. Peter Gordon, P.E. Linear Capital Program Management Division at the Department of Environmental Protection, 59-17 Junction Boulevard, 3rd Floor Low Rise, Corona, NY, 11368 at (718) 595-4347, at least thirty (30) days prior to the start of construction.

(2) NEW YORK CITY FIRE DEPARTMENT

The Contractor must notify the Bureau of Plant Operations - Engineering Unit at least thirty (30) days prior to the start of construction by contacting Mr. Ed Durkin at (718) 281-3933.

(3) N.Y.C. DEPARTMENT OF TRANSPORTATION

The Contractor will notify Mr. Hasib Amini / Akmal Mikhail – Traffic Signal/Street Lighting Operations, 34-02 Queens Blvd., Long Island City, N.Y. 11101 at (212) 839-3386 / (212) 839-3368, at least seventy-two (72) hours prior to the start of construction.

(4) N.Y.C. DEPARTMENT OF PARKS AND RECREATION

The Contractor must notify the Parks Department at least seventy-two (72) hours prior to the start of construction by contacting Mr. Daniel Grulich at (718) 760-6927.

(5) N.Y.C. TRANSIT AUTHORITY

(a) The Contractor will notify Outside Projects at least seven (7) days prior to the start of construction.

The Contractor will contact:

Mr. Mohamed Adam, P.E.
Project Engineer-Outside Projects
New York City Transit
2 Broadway, 8thFloor
New York, NY 10004
EPP-PublicAgency@mtacd.org
External Partner Program Website
Telephone No. (646) 252-3641

(b) The contractor is advised that bus routes as well as bus stops, within the scope of this project may be affected during construction operations. The Contractor will notify the Transit Authority at least two (2) weeks prior to the start of construction, in order to make the necessary arrangements.

Arrangements will be made through:

Hillary Cardoza Cato
Director, MTA-NYCT & MTA Bus, Bus Service Planning 2
Broadway, A17.03
2 Broadway, 17th Floor, New York, N.Y. 10004
Hillary.cardoza-cato@nyct.com
646-252-5643 O 347-539-1367 M

(c) In addition, the Contractor is advised that construction operations might affect subway lines and stations; and NYCT facilities (i.e. manholes, ducts, etc.). The Contractor shall notify the Transit Authority.

(3) **Refer** to **Subsection 10.24 – Damaged Water Service Pipes To Be Repaired By A Licensed Plumber**, Page 22:
Add the following to **Subsection 10.24**:

If the damaged or cut water service pipe is lead, galvanized steel, or galvanized iron, the service pipe must not be partially replaced, but fully replaced from the main to the house control valve. If the service pipe was damaged, cut, or otherwise interrupted due to the Contractor's actions or means & methods (including selection of shoring systems), the water service pipe will be replaced at the Contractor's own cost.

(4) **Refer** to **Subsection 10.25 - Contractor To Carry Out Agreement Between City And Railroad Company Or Property Owner(s)**, Page 22:
Add the following to **Subsection 10.25**:

A) NYC TRANSIT GENERAL NOTES

For NYC TRANSIT notes see the contract drawings.

(5) **Refer** to **Subsection 10.30 - Contractor To Provide For Traffic**, Page 24:

(1) Traffic Stipulations:

The Contractor will refer to the **OCMC TRAFFIC STIPULATIONS** in the **S-Pages under Section B** included in this Contract and as directed by the Engineer.

(6) **Add** the following new **SECTION 64.14**

SECTION 64.14 LEAD SERVICE LINE REPLACEMENT

64.14.1. INTENT

(A) Description

This section describes the work to be performed when a lead house service line must be replaced.

Replacing a lead service line includes replacing the entire service line between the corporation stop at the water main and the meter inside the building. Partial replacements or repairs of lead service lines are not allowed, per the Rules of the City of New York ("RCNY") Title 15, Chapter 20, Section 20-03(s). See Section 64.14.1 (D), below.

A partial lead service line (i.e., a lead service line that was previously extended or repaired) will be treated as a lead service line for the purposes of this Section.

All Work must conform to the requirements of RCNY Title 15, Chapter 20. If a conflict exists between these specifications and Title 15, Chapter 20 of the RCNY, Title 15 Chapter 20 of the RCNY will take precedence.

(B) Responsibility

Replacing a lead house service line will be:

1. The responsibility of the Contractor, and performed at the Contractor's sole expense, when:
   a. The Contractor has damaged the lead service line.
   b. The lead service line is cut or damaged due to the Contractor's means and methods.
2. The responsibility of the property owner, and performed by a contractor retained by the property owner at the property owner's sole expense when:

a. Upon careful excavation, the service line is found to be already damaged or leaking.

3. The responsibility of the City, and performed by the Contractor at the City's expense, as paid for under bid items **64.14A, 64.14AL, 64.14AM, 64.14B, 64.14BL, 64.14BM,** and / or **64.14V** when:

a. The service line is in good condition and must be relocated or modified in order to construct a City owned utility, structure, or Green Infrastructure asset.

The final determination of responsibility for each service line to be replaced will be made by the Commissioner, in consultation with NYCDEP.

If a service line is required to be replaced at the Contractor's sole expense, the requirements of this Section must be followed.

(C) Outreach and property owner coordination

If a service line is required to be replaced at the Contractor's sole expense, the Contractor is responsible for all outreach and property owner coordination.
If a service line is required to be replaced at the property owner's sole expense, the Engineer, in consultation with NYCDEP, will provide the DEP 3-day water notice to the property owner.

If a service line is required to be replaced at the City's sole expense, the outreach will be as follows:

1. The Engineer will perform the initial outreach to the property owner and distribute the water filters provided in accordance with **Section 64.14.3.(O)**.
2. The Engineer, in consultation with NYCDEP, will obtain a written consent agreement from the property owner to:

a. Have their service line replaced at the City's expense;

b. Allow the Contractor access to perform the service line replacement; and
c. Accept the restoration provided by the City under **Section 64.14.3.(N)**.

The Contractor must not commence any service line restoration until and unless a written consent is obtained from the property owner by the Engineer.

(D) Partial replacement of lead service lines

Lead service lines will be partially replaced in the following conditions:

1. The service line is required to be replaced at the City's sole expense, but the property owner does not provide the required agreement per **Section 64.14.1.(C).2** above;
2. Removal of encumbrances would prevent access to the building (i.e., require the removal of stoops) or cause a building code violation; or
3. The Engineer deems the extent of encumbrances to be excessive.

Where a lead service line is to be partially replaced, the Contractor will install a new curb valve and appurtenances per Section **64.14.3.(D)** below and replace the service line between the main and the curb valve. The replaced service line will be paid for under the appropriate items from **Sections 64.11** and **64.12**. The cost of installing the new curb valve and appurtenances must be included in the prices bid for the appropriate items from **Sections 64.11** and **64.12**.

For the purpose of providing water filter cartridges per **Section 64.14.2.(G)** below, a partial replacement, will be considered "fully replaced" upon completion of the partial replacement inclusive of the installation of the curb valve.

64.14.2. MATERIALS

(A) All service pipe, insulation, and jacketing must be in accordance with **Section 25.01,** modified as follows: Only new materials must be used for installation of service pipes. New service pipes of two (2) inches in diameter or less must be Type K copper tubing. Lead service pipes larger than two (2) inches in diameter are not anticipated in this Contract. Materials for service pipes and fittings must be in accordance with Section PC605, Chapter 6 of the New York City Plumbing Code, latest version.

(B) Backfill must be in accordance with **Section 40.06**.

(C) Sawcutting must be in accordance with of **Section 71.11**.

(D) Temporary restoration of streets, sidewalks, and curbs must be in accordance with **Section 71.31**.

(E) Permanent restoration of streets, sidewalks, and curbs must be in accordance with **Section 71.41**.

(F) Permanent restoration of pavements on private property must be in accordance with **Section 71.41**.

(G) Water filters: The water filter must include a water pitcher and an adequate supply of matching filter cartridges. The water pitcher must be a 7 cup standard PUR pitcher filter system as manufactured by KAZ, Inc. Filter cartridges must be supplied at no separate cost to cover the duration from distribution of the pitcher to the property owner for six months after the service line is fully replaced. Filters must be certified by the Water Quality Association (WQA) to remove 99% of lead in the water.

64.14.3. METHODS

(A) Service Line Details

1. Service lines less than one (1") inch will be replaced with one (1") inch service lines. Service lines one (1") inch and greater will be replaced with the same size service line.
2. Each new water service pipe must be laid in a straight line at right angle to the street main and extending from the tap to the main building control valve. Where surface or subsurface conditions make it impracticable to install a service pipe in accordance with the above conditions, it may be otherwise laid in an alternate location, provided the Contractor submits

a plan showing the proposed alternative location of the water service pipe, and obtains the prior written approval of the Engineer as well as any and all applicable permits.

3. Unless otherwise authorized by the Engineer in writing, each copper tubing service must have at least three (3) feet of copper tubing formed in a gooseneck connection to the tap and laid to the right hand, facing the tap. Each copper pipe with threaded joints must have, at the tap or wet connection, an offset swing joint consisting of four (4) elbows and three (3) pieces of pipe, each piece of pipe not less than two (2) feet in length, laid to the right side facing the connection. Connections to the City main by ductile iron or cast iron must be made directly; no offset swing joint is permitted.
4. Where buildings are constructed on pile foundations or other unyielding supports, the copper tubing service must have two (2) goosenecks, and the copper pipe with threaded joints must have two (2) offset swing joints, one at the tap or the wet connection, laid to the right side facing the main, and one immediately outside the building, laid to the right side facing the building, with a sleeve to carry the service through the foundation wall.
5. All water service pipes must be installed and maintained at a depth of at least three and one-half (3½) feet and no more than six (6) feet below ground unless written permission to vary this requirement is obtained from the Engineer. Where a water service pipe has less than three and one-half (3½) feet of cover, due to subsurface conditions, it must be insulated and protected and possibly plated, as required, in a manner approved by the Engineer. No water service pipes will be allowed at a depth of 30” or less.
6. A water service pipe must not be laid within six (6) inches of any other subsurface structure, conduit or pipe, nor directly below and parallel with any subsurface structure, conduit or pipe.
7. All surfaces to be insulated must be cleaned of all scale, rust, oil, and foreign matter and must be dry and free of frost prior to and during application of insulation. All testing of piping to be insulated must be completed prior to the application of any insulation materials. All insulation and accessory materials must be stored in an area that is dry and protected from weather before and during insulation application. Insulation must be applied based on the approved manufacturer's requirements and as approved by the Engineer.
8. If a house ground connection is attached to the existing service line, it must be reconnected to the new service line at no additional cost.

(B) Installation

1. Water service pipe laid in a sewer or construction trench must be protected from settlement by supports or by securely benching the service in the side earth wall where applicable, while maintaining minimum distance requirements from sewer pipe.
2. After a tap has been inserted or service pipe installed, the backfill around and one (1) foot over the main and service must be Select Granular Fill and carefully tamped under and around the main and service line. The remainder of the backfill must be Approved Excavated Suitable Fill and must be satisfactorily compacted either by tamping or flushing, or both. Where trenchless technology (tunneling) has been permitted the backfill of the tunnel portion must be well compacted with Select Granular Fill. Tunneling is the preferred method and should be used where practical to avoid disturbing encumbrances.
3. If removal of encumbrances is necessary, the removal will be paid for under item 6.27A, DEMOLITION OF STRUCTURES. Prior written approval of the Engineer is required.

(C) Disconnect and Reconnecting Service Connections

The Contractor must disconnect existing lead service lines and reconnect new copper pipe at the City water main for all water service lines which are required to be replaced.

1. In all instances, where lead water service lines are to be replaced, the Contractor must excavate at the water main, disconnect the supply at the existing tap, and continue with replacement of the lead service line.
2. New taps may be required to be installed prior to the installation of the water service line. The Engineer must determine if an existing tap must be replaced. The Contractor must expose the existing tap and provide the Engineer the opportunity to inspect the tap and make such determination. Any and all costs associated with the installation of new taps, including but not limited to coordination and accommodation efforts, is deemed included in the unit items herein and no additional payment will be made to the Contractor.

(D) Curb Valves

1. All new water service lines must have new curb valves installed with iron extension boxes, unless directed by the Engineer.
2. Curb valves must be full port ball valves or non-rising stem gate valves designed for a minimum of 150 psi of working pressure.
3. All curb valves must be set in the sidewalk area and located 18” (eighteen) inches inside the face of the curb. Any variance from this requirement must be submitted in writing to, and approved in writing by, the Engineer.
4. Curb valves must be provided with a tar coated iron extension box with a cover which must be installed flush with the sidewalk within ¼ inches. Curb valves 2 inches and smaller may be full port ball valves equipped with a quarter turn shutoff.

(E) Building Control Valves

1. Where possible, existing building control valves must remain. If directed by the Engineer or if a building control valve is not present, a new building control valve must be installed. Removal and disposal of deteriorated valves or valves that contain lead will be incidental to installation of new building control valves. Building control valves must be made of material similar to the water service pipes and must be gate type except that valves between ¾” and 2” may be full port ball valves. Lead content of valves must not exceed 0.25%.
2. Building control valves must be placed on the water service pipe within 2’ of the building wall and located where they will be accessible at all times. Valves must be designed for a 150 psi minimum working pressure. For combined service pipes 2 inches or smaller, the building control valve may be an OS&Y valve or UL/FM- approved full-port ball valve approved by the New York City Department of Buildings.

(F) Building Penetration

1. Where required, existing sleeves must be removed and new sleeves must be installed and grouted to properly seal the building penetration. Additional building penetrations should be avoided when possible. The sleeves to be used must be ductile iron. The cost for sleeves will be deemed included in the costs of all scheduled items.
2. If the existing service is cast into the wall without a removable sleeve, the Contractor must drill accordingly to allow for the installation of a sleeve. If the sleeve is non- removable, in good condition, and can be properly sealed, the Contractor must reuse the existing penetration, subject to the Engineer’s approval. Core holes must be centered over the existing service pipe. The Contractor must take all necessary precautions to prevent coring water from collecting inside the building and to prevent damage to property in the building.

(G) Test of Service Pipe

Each new water service line must be subjected to a water test under the street main pressure by the Licensed Master Plumber in the presence of the Engineer. All pipes and appurtenances must remain uncovered for the duration of the test and must show no sign of leakage.

(H) Flushing of Service Lines

The Contractor must perform flushing in accordance with AWWA C810, Section 4.4.1. The cost for all flushing will be deemed included in the costs of all scheduled items.

(I) Water Main Shutdowns

The work under this item must be performed in strict accordance with RCNY, Title 15, Chapter 20, and as directed by the Engineer. If it is necessary to shut off the water main while repairing, replacing, or installing a service pipe, the Licensed Master Plumber must immediately notify the Engineer. No separate payment will be made for water main shutdowns that are needed by the Contractor; payment will be deemed included in the individual bid items.

(J) Dewatering

The work under this item requires installation, maintenance, operation, deconstruction, and removal of dewatering equipment to adequately lower the groundwater table to a point below the trench subgrade. Dewatering will be required at all ordered locations where groundwater is present in the trench, or as directed by the Engineer. The work must be performed in strict accordance with the Standard Water Main Specifications, NYCDOT Standard Highway Specifications, and as directed by the Engineer. There will be no separate payment for the installation, maintenance, operation, deconstruction, or removal of any dewatering equipment; payment will be deemed included in the individual bid items.

(K) Extended Work Hours

The Contractor must schedule corporation stop (tap) and wet connection inspections only during regular business hours, unless approved by the Engineer. All work performed during extended work hours and any work done on holidays or on weekends, must be performed in strict accordance with the NYCDOT permits, and as directed by the Engineer. Work performed during extended hours will not be paid for separately; payment will be deemed included in bid items.

(L) Time is of the Essence

Construction of building service lines must be completed promptly and without delay in order to minimize the impact on property owners. All service lines should be disconnected and reconnected (brought back on-line) on the same day of installation and no later than 6 pm. However, in no event will building service lines be disconnected for a duration greater than 24 hours. This may require the service line replacement to be done in a two- step process (main to curb valve, curb valve to meter) in order to minimize the impact on property owners, at no separate cost. If service line replacement is done as a two-step process, the overall time must not exceed six months.

(M) Final Cleanup

All pipes and valves removed during the Work will become the property of the Contractor. Lead pipes must be disposed of by the Contractor in full compliance with federal, state, and local environmental rules, policies, and regulations, and as approved by the Engineer.

Project site must be left in a neat and clean condition. All tools, equipment, materials, debris, scrap, trash, etc. must be removed at the end of the work day and upon completion of the Work.

(N) Restoration

1. Restoration in roadways, curbs, and sidewalks

Restoration of roadways, curbs, and sidewalks will be in kind to match existing, and will be paid for under the appropriate bid item, as described in **Section 71.41**.

2. Restoration on private property

All excavations within the building line, except asphalt and concrete pavements, must be backfilled with the excavated material and levelled smoothly to the adjacent ground, and these costs must be included in the prices bid for replacement of service lines. The Contractor will not be responsible for removal or replacement of encumbrances on service line replacements paid for by the City. Encumbrances are the property owner's property that interfere with the lead water service line replacement and may include:

a. Stoops, retaining walls, railings, decks, porches, fountains, statuary, or other structures other than sidewalks, driveways, or pavements;
b. Shrubs, trees, or landscaping other than turf; and
c. Walls, panels or finishes inside the building.

Restoration on private property will be limited to installing new asphalt and concrete pavements, subject to approval by the property owner. If the property owner does not agree to the restoration below, no additional restoration will be provided. The following are the only items available for restoration on private property:

a. Item 4.02 AG, ASPHALTIC CONCRETE WEARING COURSE, 3" THICK, S.Y.
b. Item 4.13 AAS, 4" CONCRETE SIDEWALK, S.F.
c. Item 4.13 BAS, 7" CONCRETE SIDEWALK, S.F.
d. Item 4.20 SEEDING, S.Y.

(O) Water Filters and Test Kits

For every lead service line encountered, the Contractor must:

1. Submit a Lead Test request through NYC 311. NYCDEP will directly supply lead test kits to the property owner.
2. Provide a water filter meeting the requirements of **64.14.2.(G)** to the Engineer, who will distribute to the property owner immediately following lead service line replacement. The Contractor will not be paid separately for water filters; the costs of these items must be included with the prices bid for all items.

64.14.4. MEASUREMENT

(A) The quantities of REPLACEMENT OF SERVICE LINE UP TO 1 IN, UP TO 40 FT and REPLACEMENT OF SERVICE LINE 1-1/4 TO 2 IN, UP TO 40 FT to be measured for payment will be the actual number of service lines replaced.

(B) The quantities of ADDITIONAL LENGTH OF SERVICE LINE UP TO 1 IN BEYOND 40 FT and ADDITIONAL LENGTH OF SERVICE LINE 1 -1/4 TO 2 IN BEYOND 40 FT to be measured for payment will be the additional length, measured in linear feet, of service line beyond 40 feet measuring as the distance of a straight line from the centerlines of the water main to the meter or building main control valve, whichever is encountered first. Any quantity beyond the straight-line distance will require prior written approval by Engineer.

(C) The quantities of REPLACEMENT OF SERVICE LINE UP TO 1 IN BETWEEN BUILDING CONTROL VALVE AND METER and REPLACEMENT OF SERVICE LINE 1-1/4 TO 2 IN, BETWEEN BUILDING CONTROL VALVE AND METER to be measured for payment will be the actual length of service lines replaced between the building control valve and meter.

(D) The quantities of INSTALL NEW BUILDING CONTROL VALVE 2 IN AND UNDER to be measured for payment will be the actual number of building control valves replaced.

64.14.5 PRICE TO COVER

(A) The price bid for REPLACEMENT OF SERVICE LINE UP TO 1 IN, UP TO 40 FT, ADDITIONAL LENGTH OF SERVICE LINE UP TO 1 IN BEYOND 40 FT,

REPLACEMENT OF SERVICE LINE 1-1/4 TO 2 IN, UP TO 40 FT, and ADDITIONAL LENGTH OF SERVICE LINE 1 -1/4 TO 2 IN BEYOND 40 FT must be a unit price bid per each service line replaced, and must include the cost of all labor, materials, plant, equipment, and insurance required to complete the Work as specified, including but not limited to: obtaining permits, scheduling appointments, performing site visits, providing notification, mobilization, sawcutting, excavation work disconnection and reconnection of service at main, sheeting, removal and disposal of existing service lines (inclusive of any salvage value), curb valves and curb valve boxes, removal or destruction of existing tap, installation of new taps, installation of gooseneck and offset swing joint, installation of new curb valve, coring and installing seal for building penetration, excavation of all materials of whatever nature encountered, restoration of private property, permanent restoration of street, curb and sidewalks including pigmented concrete as required, cleaning up, hauling away of all materials, removal of all debris and water incidental to connecting the water service line to the building control valve, inspection and testing, flushing, and buried insulation of water service lines due to insufficient depth, and demobilization together with all other items necessary to complete the Work.

(B) The price bid for REPLACEMENT OF SERVICE LINE UP TO 1 IN BETWEEN BUILDING CONTROL VALVE AND METER and REPLACEMENT OF SERVICE LINE 1-1/4 TO 2 IN, BETWEEN BUILDING CONTROL VALVE AND METER must be a unit price bid per linear foot, and must include the cost of all labor, materials, plant, equipment, and insurance required to complete the Work as specified, including but not limited to the meter setter, couplings, and other fittings; cleaning up; hauling away of all materials; together with all other items necessary to complete the Work.

(C) The price bid for INSTALL NEW BUILDING CONTROL VALVE 2 IN AND UNDER must be a unit price bid per each valve replaced, and must include the cost of all labor, materials, plant, equipment, and insurance required to complete the Work as specified, including valve supports; connections to service and building lines; earth excavation of all materials of whatever nature encountered; backfilling; cleaning up; hauling away of all materials; together with all other items necessary to complete the Work.

(D) When payment is made under this Section 64.14 for replacement of a service line, no separate payment will be made under Sections 64.11 and 64.12.

(E) No direct payment will be made to the Contractor for insulating service lines where required. All costs associated with furnishing, delivering, and installing insulation and appurtenances will be deemed included in the prices bid for the items below.

Payment will be made under:

Item No.	Description	Pay Unit
64.14A	REPLACEMENT OF SERVICE LINE UP TO 1 IN, UP TO 40 FT	EACH
64.14AL	ADDITIONAL LENGTH OF SERVICE LINE UP TO 1 IN BEYOND 40 FT	LF
64.14AM	REPLACEMENT OF SERVICE LINE UP TO 1 IN BETWEEN BUILDING CONTROL VALVE AND METER	LF
64.14B	REPLACEMENT OF SERVICE LINE 1-1/4 TO 2 IN, UP TO 40 FT	EACH
64.14BL	ADDITIONAL LENGTH OF SERVICE LINE 1 -1/4 TO 2 IN BEYOND 40 FT	LF
64.14BM	REPLACEMENT OF SERVICE LINE 1-1/4 TO 2 IN, BETWEEN BUILDING CONTROL VALVE AND METER	LF
64.14V	INSTALL NEW BUILDING CONTROL VALVE 2 IN AND UNDER	EACH

(7) Refer to Subsection 71.41.4 - Specific Pavement Restoration Provisions, Page 530:
Add the following to Subsection 71.41.4:

(E) Specific Pavement Restoration Provisions:

(1) For the entirety of the Street within the Project Scope:

The permanent restoration over the **trench width and cutbacks only** must consist of a top course of one and one-half (1-1/2) inches of asphaltic concrete wearing course on a base course of a minimum of four and one-half (4-1/2) inches of binder mixture, or a top course of one and one-half (1-1/2) inches of asphaltic concrete wearing course on a minimum of one and one-half (1-1/2) inches of binder mixture on a base course of a minimum of six (6) inches of concrete, to match the existing pavement as directed by the Engineer.

(2) The Following Requirements Apply:

(a) Before the top course is installed, an additional width of asphalt beyond the edge of new base course must be saw-cut and removed from all edges of trenches to a depth to accommodate the specified top course and the entire area restored. This additional removal must be in accordance with paragraph (b) below.

(b) Pavement excavation along with saw cutting of pavements for sewer and water main trenches must be in accordance with **Section 71.21 - Pavement Excavation** of the Standard Sewer And Water Main Specifications.

(c) At locations requiring the installation of a concrete base course, a reflective cracking membrane must be installed over joints prior to restoration, the cost of which shall be deemed included in the prices bid for all pavement restoration items. Additionally, appropriate pavement keys as described below shall be used. Additionally, appropriate pavement keys as described below must be used.

(d) Pavement keys **Type B-1** must be used to insure a desired four (4) inch curb reveal (two and one-half (2-1/2) inch absolute minimum). Pavement key **Type A** must be used in all intersections. Both keys are to be per Bureau of Highways Operations Specifications and Standard Details of Construction.

(e) Unless otherwise specified, the cost for Proctor analyses, in-place soil density tests, tack coating, eradication of temporary roadway markings, stripping or milling of pavement keys and adjustment of city-owned castings for all roadway work will be deemed included in the prices bid for all pavement restoration items.

(f) Payment for placement of temporary pavement marking will be made under Item No. 6.49 - TEMPORARY PAVEMENT MARKINGS (4” WIDE).

(g) Payment for removal of existing pavement markings will be made under Item No. 6.53- REMOVE EXISTING LANE MARKINGS (4” WIDE).

(h) Payment for placement of permanent pavement marking with thermoplastic reflectorized pavement markings (crosswalk and lane dividers) will be made under Item No. 6.44 - THERMOPLASTIC REFLECTORIZED PAVEMENT MARKINGS (4” WIDE).

(i) Payment for pavement restoration will be made under the following items:

ITEM NO.	ITEM	PAYMENT DESCRIPTION
4.02 AG	Asphaltic Concrete Wearing Course, 3” Thick	(For restoration on private property where lead service replacement is required)
4.02 CB	Asphaltic Concrete Mixture	(For binder mixture base course over trenches and cutbacks; binder mixture top filler course under asphaltic concrete wearing course when no overlay is required; binder mixture top course when overlay is required; binder mixture in Type A and B Keys; and binder mixture to fill in roadway depressions and to provide a leveling course prior to overlay where ordered.) reconstruction and trench restoration.)
4.04 H	Concrete Base For Pavement, Variable Thickness For Trench Restoration (High Early Strength)	(For concrete base course over trenches and cutbacks.)
4.04 HB	Concrete Base for Pavement, 7” Thick (High-Early Strength)	(For concrete base course over trenches and cutbacks)
4.05AX	High Early Strength Reinforced Concrete Pavement (Bus Stop)	(For reinforced concrete pavement at bus stops)

C. REVISIONS TO THE SPECIFICATIONS FOR TRUNK MAIN WORK

Refer to the Specifications for Trunk Main Work, Division 2, Article 69.A.
Replace Article 69.A with the following:
"Cement must meet the requirements of AWWA C205, or as otherwise specified by the Engineer."

END OF SECTION

This Section consists of Thirteen (13) pages.

NO TEXT ON THIS PAGE

EP7 (1.0) - PAGES

GAS COST SHARING (EP-7) STANDARD SPECIFICATIONS

NOTICE

THE PAGES CONTAINED IN THIS SECTION REPRESENT THE GAS COST SHARING WORK THAT SHALL APPLY TO AND BECOME A PART OF THE CONTRACT.

(NO TEXT ON THIS PAGE)

TABLE OF CONTENT

I - NOTICE TO ALL BIDDERS; GAS COST SHARING WORK

II - GENERAL PROVISIONS; GAS COST SHARING WORK

1. General
2. Gas Interferences And Accommodations
   2a. Water Main Accommodations
   2b. Sewer Accommodations
3. Quantity Overruns, EP-7 Funded Bid Items
4. Changes And Extra Work
5. Excavation
6. Backfilling And Street Restoration
7. Non-Responsive Bids
8. Minimum Clearances
9. Work By Facility Operator
10. Materials Furnished By Facility Operator
11. Liability And Insurance
12. Width And Depth Of Excavation
13. Depth And Crossing Angles Of Gas Facilities
14. Maintenance Of Traffic For Gas Work
15. Relocated Gas And Temporary Systems Installation
16. Role Of Company Inspector
17. Coordination With Gas Company

III - TECHNICAL SECTION

SECTION 6.01 - Trench Crossings; Support And Protection Of Gas Facilities And Services.
SECTION 6.02 - Extra Excavation For The Installation Of Catch Basin Sewer Drain Pipes With Gas Interferences.
SECTION 6.02.1 - Extra Excavation For The Installation Of Catch Basin Sewer Drain Pipes With Upstream Inverts Greater Than Six (6) Feet.
SECTION 6.03 - Removal Of Abandoned Gas Facilities. All Sizes.
SECTION 6.03.1 - Removal Of Abandoned Gas Facilities With Possible Coal Tar Wrap. All Sizes. (For National Grid Work Only)
SECTION 6.03.1a - Removal Of Abandoned Gas Facilities With Possible Coal Tar Wrap. All Sizes. (For Con Edison Work Only)
SECTION 6.04 - Adjust Hardware To Grade Using Spacer Rings/Adaptors. (Street Repaving.)
SECTION 6.05 - Adjust Hardware To Grade By Resetting. (Road Reconstruction.)
SECTION 6.06 - Special Care Excavation And Backfilling.
SECTION 6.06A - Special Care Excavation And Backfilling for Transmission Mains
SECTION 6.07 - Test Pits For Gas Facilities.
SECTION 6.08 - "No Text"
SECTION 6.09 - Trench Excavation and Backfill for New Gas Mains and Services (For National Grid Work Only)
SECTION 6.09a - Trench Excavation and Backfill for New Gas Mains and Services (For Con Edison Work Only)

SECTION 6.11 - Supports for Parallel fully gas main in Trench (For National Grid Work Only)

IV - STANDARD SKETCHES; GAS COST SHARING WORK

NO. 1 - Support Requirements For Gas Mains And Services Crossing Excavation Greater Than 4'-0" Wide At Any Angle
NO. 1A - Support Requirements For Gas Mains Over 16" Diameter Up To And Including 48" Diameter Crossing Excavation At Any Angle
NO. 2 - Typical Methods Of Measurement For Gas Crossings
NO. 3 - Utility Crossings During Catch Basin Chute Connection Pipe Installation
NO. 4 - Utility Crossings During Catch Basin Chute Connection Pipe Installation (Extra Depth)
NO. 5 - Gas Main Encroachment On And/Or Parallel To Excavation Of Unsheeted Trench

V - PRELIMINARY GAS WORK TO BE PERFORMED BY FACILITY OPERATOR

VI - LISTING OF APPROXIMATE LOCATIONS OF EP-7 BID ITEMS QUANTITIES

I - NOTICE TO ALL BIDDERS; GAS COST SHARING WORK

All prospective bidders are hereby advised that, pursuant to the "Gas Facility Cost Allocation Act", ("the Act"), the City of New York has entered into an agreement ("the Agreement") with the gas companies (Con Edison or National Grid (formerly KeySpan Energy Delivery)) operating in their respective areas of the City to "share" the cost of facility relocation and/or support and protection of facilities disturbed by proposed water and/or sewer and related City work specified in this contract. Therefore, bid items, specifications and estimated quantities for the incremental costs of support and protection of certain gas facilities have been included in this contract. The low bid for this contract shall be determined by examining each bid for all work to be performed under this contract including any work of support and protection of gas facilities to be performed. The Contractor shall not seek additional compensation from gas companies except as specifically set forth in its contract.

II - GENERAL PROVISIONS; GAS COST SHARING WORK

1. General:

The Contractor shall perform City work with interferences from existing live and abandoned gas facilities. This shall be defined as utility work. Therefore, this contract includes bid items, specifications and estimated quantities designed to fully compensate him/her for the incremental costs of supporting, protecting, providing accommodations and, avoiding disturbing gas facilities located in the streets shown on the contract drawings. In the event that any other provisions of this contract related to gas facilities (or private utilities) conflict with these provisions, these provisions shall supersede and govern all work related to gas facilities owned by the companies operating in the project area. All utility work, as defined in these specifications, including changes and additions thereto shall be paid solely by the City except when specified otherwise in this contract. Contractor hereby agrees that the facility operator shall not be liable to pay him/her for any work performed including extra utility work. Contractor agrees that its bid prices include all compensation for loss of productivity and efficiency, idle time, delays (including any delays occasioned by negotiation of a contract change), change in operations, mobilization, demobilization, remobilization, added cost or expense, lost of profit, other damages or impact costs that may be suffered by or because of utility work, or the presence of gas facilities in the proximity of City work and that it will not seek additional compensation for these items. All disputes shall be resolved as specified in the contract.

Pursuant to the Act, Agreement, and the New York City Administrative Code, the gas company(ies) has been directed by the Commissioner and is required to perform all maintenance, repairs, replacement, shifting, alteration, relocation, and/or removal work that are not part of this contract. By having bid on this contract, the Contractor understands and agrees that the Commissioner has preasserted any right the City has to require, including the issuance of any directives or so called "order outs" under the New York City Administrative Code, any or all gas companies to maintain, repair, replace, protect, support, shift, alter, relocate, and/or remove all gas facilities that are about to be disturbed by the City contract work. The issuance of additional such directives during the performance of the contract work, where necessary in the sole judgment of the Commissioner, shall be initiated by such Commissioner as set forth in the relevant sections of the Act and Agreement. Contractor further agrees to insert such requirements as set forth herein above into any contracts with its approved subcontractors so that its subcontractors also understand and agree to such contract requirements.

2. Gas Interferences And Accommodations:

During the performance of sewer and water main work funded by the New York City Department of Environmental Protection (NYCDEP), as instructed by the Engineer, the use of any applicable contract bid item is allowed in order to resolve and accommodate all gas facilities interferences with such City work, including the removal of contaminated soil in associated trench excavation. This is in addition to the specified EP-7 bid items in the contract. Payment for such accommodation shall be funded by EP-7 bid item "UTL-GCS-2WS - GAS INTERFERENCES AND ACCOMMODATIONS" (F.S. Fixed Sum). The value of such accommodation shall be computed by multiplying the appropriate unit prices bid to the quantity of work performed, as determined by the Engineer, and applying the total amount thus to be paid

to EP-7 bid item "UTL-GCS-2WS - GAS INTERFERENCES AND ACCOMMODATIONS". When EP-7 bid item "UTL-GCS-2WS - GAS INTERFERENCES AND ACCOMMODATIONS" does not exist, such additional accommodation work shall be at no cost to the City but shall be a matter of adjustment between gas facility operator and Contractor. Private facilities, other than gas, that become in interference due to gas interferences accommodations shall also be accommodated, if so directed by the Resident Engineer, at no additional cost to the City and, provided that its owner agrees to be responsible for all additional costs to Contractor, otherwise, such facility shall be ordered by the City to be maintained, shifted, relocated or replaced by its owner at his/her expenses.

2a. Water Main Accommodations:

When water main construction is to be performed in this contract, Contractor shall be required, if warranted by field conditions, and at locations designated by the Resident or Borough Engineer, to change the vertical or horizontal alignment of water mains including but not limited to all additional labor, material, work method accommodations, furnishing, delivering and laying offset fittings and pipes, etc., necessary in order to complete water main installation and, avoid gas interferences in the project area, including street intersections. Typical work method accommodations shall include, but not be limited to, pier and plate, installation of filter fabric and select fill, etc. Such work shall be performed as directed by the Engineer and in accordance with contract specifications and latest edition of water mains standards and specifications.

2b.Sewer Accommodations:

When sewer construction is to be performed in this contract, Contractor shall be required, if warranted by field conditions, and at locations designated by the Resident or Borough Engineer, to change the horizontal alignment of sewer facilities (if possible) including but not limited to all additional labor, material, work method accommodations, furnishing, delivering and construction of additional manholes or modification of manholes/catch basins, extending chute connections, house connections, using alternate materials and methods, poured-in-place structures, etc., necessary in order to complete sewer installation and, avoid gas interferences in the project area, including street intersections. The term sewer facility shall include, but not be limited to, all sewer pipe and appurtenances, manholes, catch basins, catch basin chutes, etc. Such work shall be performed as directed by the Engineer and in accordance with contract specifications and latest edition of sewer standards and specifications.

3. Quantity Overruns, EP-7 Funded Bid Items:

No quantity overrun, in excess of one hundred twenty five (125) percent, shall be permitted for EP-7 funded bid items (gas) included in this contract, except when Resident Engineer determines that such overruns are caused by field modifications to planned City work, or approved construction methods, or contract scope changes. The Engineer will notify the gas facility operator in writing of overruns. The Contractor must invoice the gas facility operator for payment of all overruns, which will be paid by the gas facility operator at the contract bid price. Gas facility operator will be entitled to reimbursement by NYCDEP under established cost sharing procedures.

4. Changes And Extra Work:

This section is not applicable to work defined under "Emergency Reconstruction Contracts" or so-called "Where and When Contracts" since these projects, by definition, inherently encounter unanticipated gas facilities and cannot be pre-engineered. In all other cases, any contract changes proposed for City work shall also cover and include all associated changes to support and protection of gas facilities affected by such changes to City work. In all other cases where the Contractor finds that City work cannot be performed as planned and specified and/or, as approved because of a need to support, protect and/or alleviate interferences from gas facilities that were not listed and/or shown, or incorrectly shown in contract plans and specifications, he shall immediately notify the Resident Engineer and the facility operators' representative of his findings. Resident Engineer shall promptly examine such claims and determine whether or not such work is covered by contract bid items and /or specifications (contract bid items and specifications shall include city contract items as well as EP-7 items). The Resident Engineer shall also

examine the claim to determine if the application of EP-7 bid item "UTL-GCS-2WS - GAS INTERFERENCES AND ACCOMMODATIONS" is appropriate to resolve the claim. If upon examination, the Engineer determines that such field conditions were unanticipated (not shown and/or listed, or incorrectly shown in contract documents) and are not covered by bid items and contract specifications, he shall then direct the Contractor and the affected facility operator to negotiate the cost of supporting and protecting, and/or alleviating the impact on City work caused by such unanticipated gas facilities with each other with the understanding that the performance of City work shall continue during negotiations. If a cost agreement is reached, the Contractor and facility operator shall adjust such costs between themselves at no additional costs to the City contract. If the Contractor and affected facility operator do not reach an agreement concerning the price to be paid for the extra work within five (5) business days of the Engineer's directive to engage into such negotiations and, after considering: public safety and inconvenience, requirements of laws and regulations applicable to private utilities, integrity of all utility systems, including but not limited to sewer and water, gas, electric, telephone and, cable TV facilities, sound engineering practices, cost (long and short term) to all affected parties, and potential City work delays, then the Resident Engineer, depending on nature and severity of interferences with City work, shall either, direct the facility operator to relocate or replace its facilities at its own discretion and cost, reimbursable by NYCDEP under established gas cost sharing procedures or, direct the Contractor to perform the utility work on actual time, material and equipment costs basis pursuant to relevant contract requirements and amendments. Contract bid prices for any applicable items of work involved shall be applied, or converted to an allowance for time and material charges. Changes shall be for affected portions of utility work and, shall be processed with EP-7 funds.

5. Excavation:

All excavators shall notify the NYC/LI One Call Center at 1-800-272-4480 at least two (2) working days, not including the day of the call, but not more than ten (10) working days in advance of the start of any excavation work. The gas company(ies) will mark out its facilities within the project limits and provide Construction Inspector(s) during all excavation work in close proximity (within twelve (12) inches) to gas facilities. The Contractor shall exercise extreme caution when excavating in the vicinity of any gas facilities. Hand excavation shall be performed within twelve (12) inches of gas facilities. The Contractor prior to excavating underneath these facilities shall adequately support all gas facilities. Standard support details for gas facilities have been included in the specifications. Any damage to gas facilities shall be reported immediately to the gas company(ies). The Contractor shall be responsible for all cost associated with repairs made necessary by damages caused by his operations.

6. Backfilling And Street Restoration:

Backfilling operations and street restorations shall be in accordance with contract requirements.

7. Non-Responsive Bids:

Every gas (EP-7) bid item has a suggested "Not less than" value per unit indicated on contract bid sheet. Bids resulting in cost of less than suggested for EP-7 items are hereby prohibited and if submitted shall be considered NON-RESPONSIVE.

8. Minimum Clearances:

Clearance requirements for City work shall govern and supersede any clearance requirement of gas facility operator. Therefore, a minimum of twelve (12) inches clearance between private utilities and City water mains, sewers or related structures to be installed in this contract shall be maintained. When this clearance is not attainable, the Resident Engineer may allow a minimum of four (4) inches clearance. With less than twelve (12) inches clearance a neoprene/polyethylene shield (to be provided by facility operator) shall be installed as part of all work item specifications. However, if Resident Engineer determines that City work cannot be performed within allowable clearance and no reasonable City accommodation (no-cost change to City work) is possible, the City shall direct the facility operator to remove, relocate, shift, or alter their facility(ies) pursuant to the New York City Administrative Code.

9. Work By Facility Operator:

The facility operator may find it necessary to perform the following types of work during performance of City work: accommodating a contractor's request for gas facilities modifications (in order to facilitate City contractor's proposed construction method) or, remedial and emergency work on gas facilities proper with their own resources and materials if an approved method of construction for City work causes unanticipated disturbances to gas facilities or, replacing defective gas facilities when they are exposed by the Contractor and their actual conditions are observable by the facility operator. Also included in the above category of defective gas facilities are: the presence of environmental contaminants attributable to the gas facility in or around gas facilities. If such work is deemed required by the facility operator or if facility operator is directed by the City to address such deficiencies at any time during the course of construction, the Contractor shall modify the construction schedule at no cost to the City and allow the facility operator five (5) business days to perform such work without interferences. Additional costs to the facility operator (in cases of accommodations) or, Contractor (in cases of defective gas facilities) due to such gas work, if any, shall be the responsibility of the parties involved and not of the City. Such costs shall be a matter of adjustment between the Contractor and the facility operator.

10. Materials Furnished By Facility Operator:

It shall be the Contractor's responsibility to inspect material to be installed by him immediately upon delivery and advise the facility operator through its authorized representative, of all damaged materials. The Contractor at no additional costs to the City or the facility operator shall replace any material that is damaged or lost after the Contractor's inspection.

11. Liability And Insurance:

Notwithstanding the provisions of this contract, the existing division of liabilities to third parties shall remain the same as between the City and the company. Therefore, it is specifically agreed by the City, company and Contractor (by bidding on this contract) that for the purpose of any liabilities to third parties, that the City contractor performing work directly and physically relating to gas company facilities in this project, shall be deemed an agent of the company and not an agent of the City, the New York City Municipal Water Finance Authority, or the New York City Water Board. Contractor shall include the company as an additional insured on all insurance policies maintained to comply with the City's insurance requirements.

12. Width And Depth Of Excavation:

Contractor shall not be authorized to deliberately change trench or excavation widths and/or depth specified without Engineer's approval. Enlargement of any side of excavation up to eighteen (18) inches beyond pay limits (or inside face of sheeting) requested by the Contractor for the installation of certain types of sheeting may be granted. However, such enlargements or those greater than allowable shall not be approved when, in the sole judgment of the City, field conditions allow the water mains and sewer work to be performed within the limits specified and, the sole purpose of such enlargement request is to impact adjacent utilities (public or private) whose support and protection are part of this contract. Any approval shall be given at no additional cost to the City contract, including EP-7 funding, and all costs associated with unauthorized enlargements shall be the sole responsibility of the Contractor.

13. Depth And Crossing Angles Of Gas Facilities:

Where gas facilities are shown (or specified as) crossing proposed alignment of sewers, water mains, catch basins and chute connections or any other proposed excavations at specific angles (as measured off plans or sketches or specified in contract), it shall be understood that actual field measurements may deviate (plus or minus) forty-five (45) degrees from those shown or specified. The cover, or depth from street surface to top of facilities, shall be as shown or specified in contract documents, no deviation is to be assumed. Where gas facilities are not shown on contract documents, but their support and protection are otherwise included in this contract then, all references to facilities crossing at "various angles and depth" in the gas sections shall mean that such facilities are crossing sewer, water, catch basin and, catch basin chute, and other excavations at a ninety (90) degree angle to the proposed sheeting line or side of

excavation (for unsheeted trenches) with an allowable deviation of forty-five (45) degrees in any direction, except for catch basin chute excavation where the allowable deviation shall be sixty (60) degrees. Where the cover is not noted or specified, the bottom face of such facilities shall be assumed to be crossing catch basin chutes at a depth of three (3) foot eight (8) inches or less from the street surface. Paragraph No. 2 above shall apply in cases of distribution water main construction. Appropriate bid items and specifications are provided for cases where angle and depth are greater than stated above. This section also applies to work defined in “Emergency Reconstruction Contracts” or so-called “Where and When Contracts”. These contracts are not pre-engineered and consequently have no drawings, sketches or determined locations and so, gas facilities encountered will be crossing existing and proposed sewer, water, catch basin/catch basin chutes and all appurtenances at various angles and depths.

14. Maintenance Of Traffic For Gas Work:

All work pertaining to gas bid items and specifications shall be performed within the contract maintenance of traffic plan as specified in the contract document. The bid price for the Maintenance and Protection of Traffic shall cover all work pertaining to gas items. The City shall make compensation for additional maintenance and protection of traffic items in connection with gas item of work only when such additional work is deemed reasonable and necessary by the Resident Engineer and is approved by him prior to its performance.

15. Relocated Gas And Temporary Systems Installation:

In cases where the Contractor is allowed to select the location for temporary construction such as, installation of dewatering headers, wells, well points, etc., he shall not disturb any gas facilities shown on sketches provided in this section. The only exception shall be, if the affected gas company agrees to such relocation and provided that the cost of such relocation is a matter of adjustment between the company and Contractor, and at no cost to the City.

16. Role Of Company Inspector:

In any case in which the City elects to perform some or all support and protection work with its own employees, personnel or contractors, the facility operator shall provide onsite inspectors to approve and certify such support and protection work (exclusive of City accommodations) performed by the City's own employees, personnel, and contractors. Facility operator’s inspectors are not authorized to direct City contractor during the performance of contract work. They shall act through the City Resident Engineer and provide him/her required approvals and certifications, prior to preparing partial payments of EP-7 items, in a format and frequency to be prescribed by the appropriate City Head of Construction.

17. Coordination With Gas Company:

The Contractor shall be required to notify the gas company(ies), in writing, at least two (2) weeks prior to the start of final paving in order to allow companies to complete any unfinished gas work located within the area to be paved. Every effort shall be made to maintain gas service with minimum inconvenience to the public.

III - TECHNICAL SECTION

SECTION 6.01 - Trench Crossings; Support And Protection Of Gas Facilities And Services.

1. Description:

Under this section, the Contractor shall provide all labor, materials, equipment, and incidentals required to support and/or protect the integrity of gas mains, services and appurtenances of any sizes, configurations, and operating pressures crossing trench excavations above subgrade for planned construction of sewers

and water mains facilities. A gas service shall be defined as a gas pipe of three (3) inches in diameter or less branching from the main to a customer pick up point or property valve box. A gas main may be any size pipe that is part of a distribution or transmission network other than services described above. Crossings shall be defined as gas facilities spanning the width of excavation (one side to the other side). These crossings may be at various angles and depth as shown on “Gas Cost Sharing Work Standard Sketches Nos. 1 and 1A”, and as specified in “General Provisions; Gas Cost Sharing Work Paragraph No. 13” and, at the locations shown or listed in contract documents. The gas company operating in the area, (facility operator), owns these facilities. The work shall be performed in accordance with contract specifications, plans, and at the directions of the Resident Engineer in consultation with the authorized representatives of the facility operator.

2. Method Of Construction:

A. Protection: In general, the gas facilities shall be protected as required by New York State Industrial Code 753. In particular, the Contractor shall use hand excavation methods (pick and shovel or hand held power tools) directly below the pavement base to expose the gas facilities (marked out by facility operators) and to ascertain the clearances and cover of the facilities with respect to the proposed excavation. Upon exposing the affected facilities sufficiently, at the discretion of the Resident Engineer, to ascertain the foregoing, Contractor shall be permitted to proceed with a combination of hand and machine excavation, as appropriate, outside a zone of protection whose limit shall be defined as a perimeter located twelve (12) inches from the outside face of each gas facility crossings (See “Gas Cost Sharing Work Standard Sketch No. 2”). If the facilities are in direct interference with City work, meaning that “Minimum Clearances” described in “General Provisions; Gas Cost Sharing Work Paragraph No. 8” cannot be maintained, and excavation has to be temporarily or permanently abandoned then this particular location shall become a test pit and dealt with as specified in Section 6.07, and “General Provisions; Gas Cost Sharing Work Paragraphs Nos. 2 and 8”.

B. Support: Gas mains or services crossing excavations equal or less than four (4) feet wide are generally self supporting, unless field conditions as determined by the Resident Engineer require otherwise. The support requirements for gas mains and services crossing excavations greater than four (4) feet wide shall be as shown on the attached “Gas Cost Sharing Work Standard Sketch No. 1” and Contractor shall use sheeting methods that permit the maintenance of gas facilities in their existing locations and configurations. Alternate methods equivalent to those shown on the sketch or accommodations by the facility operator proposed by the Contractor in order to facilitate the execution of the specified work shall be allowable, provided that prior approval is obtained by the Contractor from the Engineer and the facility operator. The support and protection of gas facilities crossings shown on plans, drawings, listings or otherwise identified in this contract shall not be circumvented with the issuance of so called "order outs".

3. Method Of Measurement:

The Contractor shall be paid for supporting and/or protecting gas facilities crossing trench excavations under the appropriate bid items covered by this section. The Contractor shall be directly responsible to the facility operator for the total cost of using any alternate method requiring the use of resources owned by the facility operator. Regardless of the method used, the City shall pay the bid price for the appropriate support and/or protect item of work. The average rate charged by the facility operator for alternate support and protection work such as, disconnecting and reconnecting gas services is listed in attached “Schedule GCS-A”.

4. Payment Restrictions:

These items shall not be paid for: gas services crossing unsheeted water main trench excavation; abandoned gas main/services identified by facility operator; gas mains/services crossing trench excavations for fire hydrant branch connections pipes, catch basins and/or chutes (sewer drain pipe), house sewer and/or water services; gas facilities encroaching any face of excavation for sewer and/or water construction, all of which are covered under other contract sections. Also this item shall not be paid for new gas mains and services crossing water trenches when trenching for such new facilities has been

performed by the Contractor in common with trench excavation for City work (overlapping trench limits). The cost of supporting and protecting such gas facilities crossings shall be deemed included in the cost of trench excavation for the new gas facilities. This payment restriction shall apply even if such common trench gas excavation is not part of the contract. The prices bid for items covered by this section represent full compensation to Contractor to completely perform the work described. No other bid items shall be combined with these items in order to pay for gas main and/or services crossing excavations specified herein.

5. Method Of Payment:

Each (Ea.) gas facility crossing trench excavation as described in these specifications shall be counted for payment.

6. Price To Cover:

The cost of timber/steel supports installed for gas facilities shall be included in the bid price. The bid price for each crossing shall also cover all additional supervision, labor, material (except those provided by the facility operator), equipment and insurance necessary to completely maintain the gas facilities without disruption of service to the customers and in accordance with contract plans, specifications and facility operator standards. The price shall also include: changes of method of operations; sheeting modifications where necessary to accommodate the gas facilities crossings; installation and removal of water pipe under gas facilities (so called "snaking"); extra care during excavation (including hand excavation under existing single and multiple gas facilities); extra backfilling and compaction around, over and under gas facilities; installation and removal of sheeting around gas facilities; associated maintenance and protection of traffic; barricades; and traffic plates that may be required to temporarily close and/or complete the work.

SECTION 6.02 - Extra Excavation For The Installation Of Catch Basin Sewer Drain Pipes With Gas Interferences.

1. Description:

Under this item, the Contractor shall provide all labor, materials, equipment, insurance, and incidentals for the extra excavation associated with the installation of catch basin sewer drain pipes (chute) under gas facilities of various sizes crossing the trench excavation at various angles and depth at the locations shown in the contract documents and also, for the support and protection of these facilities during associated excavation and backfill operations. The gas company operating in the area, (facility operator), owns these facilities.

2. Method Of Measurement:

The bid price shall be per location (Each) where extra excavation is required when catch basin sewer drain pipes are installed at an upstream invert depth lower than four (4) feet (up to a maximum of six (6) feet) from the proposed pavement grade because the bottom faces of interfering gas mains and appurtenances are located at a depth greater than three (3) foot eight (8) inches from proposed pavement surface (See “Gas Cost Sharing Work Standard Sketch No. 4”).

3. Method Of Construction:

Incremental cost responsibility for chute excavation is determined by the first private facility encountered starting from catch basin structure proper and that prevents the installation of the chute connection at an upstream cover less than or equal to three (3) feet or any other minimum cover required to avoid City facilities (e.g. water, sewer, etc.) as directed by the Resident Engineer.

4. Payment Restrictions:

This item shall not apply and related bid item shall not be paid in cases where:

A. Upstream invert chute is more than six (6) feet deep because of gas facilities.

B. Chute cannot be installed above existing gas facilities because of interferences with other private facilities that are not otherwise covered under this contract, regardless of upstream invert depth.

The above cases shall be at no cost to the City, but shall be a matter of adjustment between the Contractor and the facility operator(s).

5. Price To Cover:

The bid price shall cover the additional cost of all additional supervision, labor, materials, equipment and insurance, to complete the installation of catch basins and associated sewer connections in accordance with the contract plans and specifications. The price shall include: excavation by hand around and under single and multiple gas facilities; locating, supporting and protecting gas facilities; backfilling and all other items necessary to perform all work incidental thereto including: installation and removal of drain pipe under gas facilities ("snaking"); widening of trenches to facilitate the above work; subsequent additional backfill and pavement restoration; modifying precast catch basin window to accommodate connection; changing sheeting method and configuration to accommodate gas facility crossings; maintenance and protection of traffic; barricades; and installation of traffic plates that may be required to temporarily close and/or complete the work. The price shall not include removal of ledge rock and/or excavation of boulders in open cut.

SECTION 6.02.1 - Extra Excavation For The Installation Of Catch Basin Sewer Drain Pipes With Upstream Inverts Greater Than Six (6) Feet.

1. Description:

Under this item, the Contractor shall provide all labor, materials, equipment, insurance and incidentals for the extra excavation of catch basin chutes where the upstream invert is greater than six (6) feet under gas facilities of various sizes crossing the trench excavation at various angles and depth at the locations shown in the contract documents or as determined by field conditions and also, for the support and protection of these facilities during the associated excavation, sheeting and backfilling operations.

2. Method Of Measurement:

The bid price shall be per location (Each) where extra excavation and sheeting is required when the catch basin chute installed at an upstream invert depth lower than six (6) feet from the proposed pavement grade because the bottom faces of the interfering gas mains and appurtenances are located at a greater depth than three foot eight inches from the proposed pavement surface only.

3. Method Of Construction:

Incremental cost responsibility for chute excavation is determined by the first private facility encountered during such excavation when initiated from catch basin structure and that prevents the installation of the chute at an upstream cover less than or equal to three (3) feet or any other cover required to avoid City facilities as directed by the Resident Engineer.

4. Payment Restriction:

This item shall not apply and related bid item shall not be paid in cases where:
Upstream invert chute is less than or equal to six (6) feet deep because of gas facilities. Section 6.02 shall be paid.

5. Price To Cover:

The bid price shall cover the additional cost of all supervision, labor, materials, equipment and insurance to complete the installation of catch basin and associated sewer connections in accordance with the contract plans and specifications. The price shall include: excavation by hand around and under single and multiple gas facilities; locating, supporting and protecting gas facilities incidental thereto; widening of trenches to facilitate the above work; subsequent additional backfilling and pavement restoration; modifying pre-cast basin window to accommodate connection; the installation of catch basin with deeper sumps as specified; additional sheeting and changes in sheeting method and configuration to accommodate gas facility crossings; maintenance and protection of traffic; barricades; and installation of traffic plates that may be required to temporarily close and/or complete the work.

SECTION 6.03 - Removal Of Abandoned Gas Facilities. All Sizes.

1. Description:

Under this section the Contractor shall provide all labor, materials, equipment, insurance and, incidentals required for the removal of abandoned gas mains, services, or appurtenances thereof, located within the street shown on the contract plans, owned by gas company operating in the project area (facility operator), used or to be used for or in connection with or to facilitate the conveying, transportation, distribution or furnishing of gas (natural or manufactured or mixture of both) for light, heat, or power, but does not include property used solely for or in connection with business of selling, distributing or furnishing of gas in enclosed containers. Such removal shall include only abandoned gas facilities that interfere with (i.e. cause additional work) City work.

2. Determination Of Operating Status Of Gas Facilities:

The Contractor shall notify facility operator, as required by New York State Industrial Code 753. Gas facilities shall not be removed without the approval of the facility operator whose authorized representative shall certify in writing (specific facility or area wide facilities certification) and in a timely manner acceptable to the Resident Engineer that abandoned facilities are free of combustible gas and any other environmental contaminants prior to removal. The Resident Engineer shall rely on facility operator's certification. The facility operator may request the excavation of test pits (See Section 6.07) for this determination ahead of City work and, Contractor shall provide safe access, facilitate and permit facility operator to enter test pit excavations for the purpose of testing gas facilities to be removed by the Contractor. However, facility operator may prefer to make this test during performance of City work, in order to issue the above certification. This shall be permitted provided that it is agreed that additional costs, if any resulting from this choice shall be a matter of adjustment between the Contractor and facility operator only, and at no cost to the City.

3. Restrictions:

The facility operator shall be solely responsible for its contaminated gas facilities, surrounding contaminated soil and their disposal and abatement procedures, unless contract bid items are applicable and provided for such work. In such cases, the quantity removed shall be charged to EP-7 bid item "UTL- GCS-2WS - GAS INTERFERENCES AND ACCOMMODATIONS" at the City bid prices.

4. Method Of Measurement:

Abandoned gas pipeline removal shall be measured for payment per linear foot of pipe and appurtenances removed.

5. Price To Cover:

The price shall cover all additional cost of supervision, labor, materials, equipment, and insurance necessary to complete this work in accordance with the contract plans and specifications, including

excavation by hand around and under other City and facility operator owned properties and, where necessary, support and protection of such properties. The price shall also cover breaking, cutting, and/or burning of abandoned gas pipes and their disposal from the site; sealing open ends remaining in the excavation with concrete or caps (caps to be provided by the facility operator) and backfilling of the area where the pipeline has been removed with clean backfill. The price shall also include any required dump charges. This item does not include any type of extra excavation, backfilling, compaction, pavement removal and restoration associated with abandoned gas facilities removal, all of which are covered under Section 6.06.

SECTION 6.03.1 - Removal Of Abandoned Gas Facilities With Possible Coal Tar Wrap. All Sizes. (For National Grid Work Only)

1. Description:

Under this section the Contractor shall provide all labor, materials, equipment, insurance and, incidentals required for the removal of abandoned gas mains, services or appurtenances thereof, located within the street shown on the contract plans, owned by the gas company operating in the project area (facility operator), used or to be used for or in connection with or to facilitate the conveying, transportation, distribution or furnishing of gas (natural or manufactured or mixture of both) for light, heat, or power, but does not include property used solely for or in connection with business of selling, distributing or furnishing of gas in enclosed containers. Such removal shall include only abandoned gas facilities that interfere with (i.e. cause additional work) City work. These gas facilities may be coated with Coal Tar Wrap and so, may require special handling and disposal methods as specified in National Grid Standard Operating Procedure 12-2, Coal Tar Wrap Handling and 12NYCRR56.

2. Determination Of Operating Status Of Gas Facilities:

The Contractor shall notify facility operator, as required by New York State Industrial Code 753. Gas facilities shall not be removed without the approval of the facility operator whose authorized representative shall certify in writing (specific facility or area wide facilities certification) and in a timely manner acceptable to the Resident Engineer that abandoned facilities are free of combustible gas and any other environmental contaminants prior to removal. The Resident Engineer shall rely on the facility operator's certification. The facility operator may request the excavation of test pits (See Section 6.07) for this determination ahead of City work and, the Contractor shall provide safe access, facilitate and permit facility operator to enter test pit excavations for the purpose of testing gas facilities to be removed by the Contractor. However, the facility operator may prefer to make this test during performance of City work, in order to issue the above certification. This shall be permitted provided that it is agreed that additional costs, if any, resulting from this choice shall be a matter of adjustment between the Contractor and the facility operator only, and at no cost to the City contract. Should such investigation result in the determination that the abandoned gas facilities do not contain Coal Tar Wrap then the removal of said facilities shall be covered under separate item (See Section 6.03).

3. Requirements:

The City Contractor shall excavate abandoned gas facility sufficiently, either in its entirety, or at locations determined by Contractor to allow the removal of Coal Tar Wrap (if present on the abandoned gas facility) and to facilitate the safe extraction of manageable lengths of abandoned pipe without damage to adjacent facilities, utilities or City structures either parallel to or crossing above or below abandoned gas facility. The Contractor is to allow access to the designated cutting points within the Contractor's trench by authorized National Grid personnel who will remove the Coal Tar Wrap as per National Grid procedures. This work by National Grid personnel shall be performed in a timely fashion and shall not unduly impede the Contractor's progress and/or productivity. Upon completion of the coating removal, the Contractor shall be allowed to cut, burn or grind the gas facility and remove the section of abandoned pipe. The Contractor at a site designated by the Contractor shall stockpile the removed pipe. The facility operator will be responsible to provide trucking and disposal services with its own personnel and shall remove the stockpiled pipes during off hours or during such time as agreed to by the Contractor. Since the pipe

removed will remain the property of the facility operator and is to be disposed of by the facility operator, the facility operator shall be responsible for any required notifications, filings, dump charges and incidentals associated with the disposal of abandoned gas facilities found to contain Coal Tar Wrap.

4. Method Of Measurement:

Abandoned gas pipeline removal shall be measured for payment per linear foot of pipe and appurtenances removed.

5. Price To Cover:

The price shall cover all additional cost of supervision, labor, materials, equipment and insurance necessary to complete this work in accordance with the contract plans and specifications, including excavation by hand around and under other City and facility operator owned properties and, where necessary, the support and protection of such properties. The cost shall also include hand excavation in the area(s) of proposed abandoned pipe cut(s), cutting and/or burning of abandoned gas pipes and stockpile of removed sections of abandoned pipe and associated maintenance and protection of traffic, blocking and temporary fencing if required. The unit price shall also cover sealing open ends remaining in the excavation with concrete or end caps (end caps to be provided by the facility operator) and backfilling of the area where the abandoned pipeline has been removed with clean backfill material. This item does not include any type of extra excavation, backfilling, compaction, pavement removal and/or restoration (temporary and permanent) associated with abandoned pipe removal ("lost trench"), all of which are covered under separate Section 6.06. The price shall also include allowance for any loss of productivity by the Contractor due to required facility operator work to remove pipe coating and prepare pipe for cutting as well as any change in Contractor's excavation method, additional trucking and/or stockpiling costs.

SECTION 6.03.1a - Removal Of Abandoned Gas Facilities With Possible Coal Tar Wrap. All Sizes. (For Con Edison Work Only)

1. Description:

Under this section the Contractor shall provide all labor, material, equipment, insurance and, incidentals required to prepare abandoned gas mains, services and appurtenances thereof located within the street shown on contract plans, owned by the gas company operating in the project area (facility operator), for removal due to interference with proposed City work. These abandoned gas facilities were, at one time, used for or in connection with or to facilitate the conveying, transportation, distribution or furnishing of gas (natural, manufactured or a combination of both) for light, heat, or power, but does not include property used solely for or in connection with business of selling, distribution or furnishing of gas in enclosed containers. Such preparation for removal shall include only abandoned gas facilities that interfere with (i.e. cause additional work) City work. These gas facilities may be coated with Coal Tar Wrap which may contain asbestos or PCB's and so, may require special handling and disposal methods as specified in Con Edison - ASBESTOS MANAGEMENT MANUAL, CHAPTER 6 - ASBESTOS WORK PROCEDURES, SECTION 06.04 - COAL TAR WRAP REMOVAL. For under 25' (feet) in length and an approved NYC-DEP variance for over 25' (feet).

2. Determination Of Operating Status Of Gas Facilities:

The Contractor shall notify facility operator, as required by New York State Industrial Code 753. Gas Facilities shall not be removed without the approval of the facility operator whose authorized representative shall certify in writing (specific facility or area wide facilities certification) and in a timely manner acceptable to the Resident Engineer that abandoned facilities are free of combustible gas and any other environmental contaminants prior to removal. The Resident Engineer shall rely on the facility operator's certification. The facility operator may request the excavation of test pits (See Section 6.07) for this determination ahead of City work and Contractor shall provide safe access, facilitate and permit facility operator to enter test pit excavations for the purpose of testing gas facilities. However, the facility

operator may prefer to make this test during performance of City work in order to issue the above certification. This shall be permitted provided that it is agreed that additional costs, if any, resulting from this choice shall be a matter of adjustment between the Contractor and the facility operator only, and at no cost the City contract. Should such investigation result in the determination that the abandoned gas facilities do not contain Coal Tar Warp then the removal of said facilities shall be covered under separate item (See Section 6.03).

3. Requirements:

The Contractor shall excavate abandoned gas facility sufficiently, either in it's entirety, or at locations determined by Contractor to allow the removal of Coal Tar Wrap (if present on the abandoned gas facility) and to facilitate the safe extraction of manageable lengths of abandoned pipe without damage to adjacent facilities, utilities or city structures either parallel to or crossing above or below abandoned gas facility. The Contractor is to allow access to the designated cutting points within the Contractors trench by authorized Con Edison personnel who will remove the Coal Tar Wrap as per Con Edison and/or NYC-DEP approved procedures. This access shall conform to all applicable codes, rules & regulations. This work by Con Edison personnel shall be performed in a timely fashion and shall not unduly impede the Contractors progress and/or productivity. Upon completion of the coating removal, the Contractor shall be allowed to cut, burn or grind the gas facility and remove the section of abandoned pipe. Contractor shall designate a specific site to stockpile those removed pipes. The facility operator will be responsible to provide trucking and disposal services with its own personnel and shall remove the stockpiled pipes during off hours or during such time as agreed to by the Contractor. Since the pipe removed will remain the property of the facility operator and is to be disposed of by the facility operator, the facility operator shall be responsible for any required notifications, filings, dump charges and incidentals associated with the disposal of abandoned gas facilities found to contain Coal Tar Wrap.

4. Method Of Measurement:

Abandoned gas facility removal shall be measured for payment per linear foot of pipe and appurtenances removed.

5. Price To Cover:

The price shall cover all additional cost of supervision, labor, materials, equipment and insurance necessary to complete this work in accordance with the plans and specifications, including, but not limited to, excavation by hand around and under other City and facility operator owned properties and, where necessary, the support and protection of such properties. The cost shall also include hand excavation in the area(s) of proposed abandoned pipe cut(s), cutting and/or burning of abandoned gas pipes and stockpile of removed sections of abandoned pipe and associated maintenance of traffic, blocking and temporary fencing if required. The unit price shall also cover sealing open ends remaining in the excavation with concrete or end caps (end caps to be supplied by facility operator) and backfilling of the area where the abandoned pipeline has been removed with clean backfill material. This item does not include any type of extra excavation, backfilling, compaction, pavement removal and/or restoration (temporary and permanent) associated with abandoned pipe removal ("lost trench"), all of which are covered under separate Section 6.06. The price shall also include allowance for any loss of productivity by the Contractor due to required facility operator work to remove pipe coating and prepare pipe for cutting as well as any change in Contractor excavation method, additional trucking and/or stockpiling costs.

SECTION 6.04 - Adjust Hardware To Grade Using Spacer Rings/Adaptors. (Street Repaving.)

1. Description:

Under this section, the Contractor shall provide all labor, supervision, materials, equipment, insurance and incidentals required to adjust to final grade gas street surface hardware located within the contract area

boundaries shown on the plans. The gas company operating in the area, (facility operator), owns these facilities. The work shall be performed in accordance with the contract plans, specifications and at the directions of the Resident Engineer in concurrence with authorized representative of the facility operator.

2. Materials:

The facility operator shall furnish and deliver all prefabricated hardware parts required. These include adaptors for the grade adjustment proper and new street hardware if existing ones are found to be defective, all in accordance with the facility operator standards and City rules and regulations. The Contractor shall notify the facility operator of the installation schedule at least three (3) business days before materials are required on the site. Should the facility operator fail to deliver the necessary material according to any schedule mutually agreed upon by the Contractor and facility operator, the City shall not be responsible for any delays attributable thereto, nor for the failure of delivery of such materials. On project where material storage is not permitted on site, the facility operator shall deliver the required material to the Contractor's yard and it shall be the Contractor's responsibility to transport the material to the work site when needed for installation. It shall also be the Contractor's responsibility to inspect the materials to be installed by him immediately upon delivery and advise the facility operator through its authorized representative, of all damaged materials. The Contractor at no additional expense to the City or the facility operator shall replace any material that is damaged or lost after the Contractor's inspection.

3. Method Of Measurement:

The Contractor shall be paid for each six (6) inch round box and/or nine (9) inch square box adjusted to grade regardless of adjustment height requirements.

4. Price To Cover:

The unit price bid for this item shall include all additional labor, supervision, insurance, equipment and, material (except those to be provided by the facility operator), required to adjust each box to grade as required in the contract plans and specifications. The bid price shall also include the removal of existing frames and covers from existing facilities to be salvaged and returned to the facility operator and, all material transportation from the Contractor's material storage yard to the work site. In addition the bid price shall include "chipping" around existing box using appropriate means and methods where grinding is required.

SECTION 6.05 - Adjust Hardware To Grade By Resetting. (Road Reconstruction.)

1. Description:

Under this item, the Contractor shall provide all labor, supervision, materials, equipment, insurance and incidentals required to adjust to the proposed grade gas street surface hardware located within the contract area boundaries shown on the plans. The gas company operating in the area, (facility operator), owns these facilities. The work shall consist of either building up or lowering or resetting the casting by removing the existing frame and cover building up or decreasing the existing installation, replacing the frame and/or cover if damaged or worn out, as determined by the Resident Engineer, with a new frame and/or cover furnished by the owner, and setting the frame and cover to new elevation. The work shall be performed in accordance with the contract plans, specifications and at the directions of the Resident Engineer.

2. Materials:

The facility operator shall furnish and deliver all new hardware parts required. The Contractor shall furnish materials such as mortar, bricks and concrete in compliance with contract requirements. At locations where high-early strength concrete is required under this contract to be placed adjacent to gas facilities, then the requirement for concrete shall be high-early strength complying with the current New York State Department of Transportation, Standard Specifications for Class F concrete. Existing castings may be replaced as required and deemed necessary by the Engineer and by City rules and regulations. The

Contractor shall install the new castings of various sizes furnished by the facility operator. The Contractor shall notify the facility operator of the installation schedule at least three (3) business days before materials are required on the site and, shall provide off-loading services to the facility operator. Should the facility operator fail to deliver the necessary material according to any schedule mutually agreed upon by the Contractor and facility operator, the City shall not be responsible for any delays attributable thereto, nor for the failure of delivery of such materials. Such delays shall be a matter of adjustment between the Contractor and the facility operator. On project where material storage is not permitted on site, the facility operator shall deliver the required material to the Contractor's yard and it shall be the Contractor's responsibility to transport the material to the work site when needed for installation. It shall also be the Contractor's responsibility to inspect the materials to be installed by him, immediately upon delivery and advise the facility operator through its authorized representative, of all damaged materials. The Contractor at no additional expense to the City or the facility operator shall replace any material that is damaged or lost after the Contractor's inspection.

3. Methods Of Construction:

The Contractor shall remove and reinstall existing castings or install new castings to the proposed grade. Setting and resetting the castings shall be done with mortar and brick according to the standards of the facility operator. Work shall be performed in a workmanlike manner. Castings that are deemed unacceptable for resetting shall remain the property of the facility operator and he shall be responsible for their removal and proper disposal from site. No traffic shall be allowed on adjusted street hardware until permitted by the Engineer.

4. Method Of Measurement:

The Contractor shall be paid for each gas hardware adjusted to grade regardless of size or adjustment height requirements (up or down).

5. Price To Cover:

The unit price bid for this item shall include all additional labor, supervision, insurance, equipment and, material (except those to be provided by the facility operator), required to adjust each gas hardware to grade as required in the contract plans and specifications. The bid price shall also include the removal of existing frames and covers from existing facilities; building up the existing installations with bricks and mortar, or lowering the existing installation by removing bricks and mortar; replacing damaged frames and/or covers with new frames and/or covers furnished by the facility operator; setting the frames and covers to the new elevations; protect existing installations; repair minor structural damages to existing installations prior to resetting frames; unloading of furnished castings at the Contractor's yard and transporting castings from the Contractor's yard to the job site as required; completing the work in accordance with the contract plans, specifications and, at the directions of the Engineer. In addition the bid price shall include "chipping" around existing gas facilities using appropriate means and methods where grinding is required.

SECTION 6.06 - Special Care Excavation And Backfilling.

1. Description:

Under this section, the Contractor shall provide all labor, materials, equipment, insurance and incidentals required to support and protect the integrity of live gas facilities including mains, services, related structures and appurtenances during excavations. The gas company operating in the area, (facility operator), owns these facilities. The work shall be performed in accordance with the contract plans, specifications and at the directions of the Resident Engineer in consultation with authorized representatives of the facility operator.

2. Applicability Of Section:

This section shall apply to live gas facilities of various sizes located within two (2) feet of any face of unsheeted excavation, (unsheeted excavation refers to any excavation performed for city work and includes excavations performed that are to be subsequently sheeted using approved methods) and paralleling or,

encroaching any face of excavation. Also, for crossings greater than forty-five (45) degrees and/or located at a cover depth greater than five (5) feet from existing street surface. Parallel facilities are not exposed at any time during excavation (See “Gas Cost Sharing Work Standard Sketch No. 5”). Encroaching facilities are partially exposed inside the limit of excavation (See “Gas Cost Sharing Work Standard Sketch No. 5”). This section shall also apply to gas facilities crossing catch basins excavation, and catch basins sewer connections (chutes) trench excavation only when extra depth (covered in other section), is not required for chutes installations because of such utilities interferences (See “Gas Cost Sharing Work Standard Sketch No. 3”). This section shall also apply to gas services (if shown or otherwise listed in contract documents) crossing unsheeted excavations for water mains, gas facilities crossing fire hydrant branch connections, house sewer and/or water service connections excavations. This section shall also apply for so called “loss trench”, as described further, and for additional excavation (pavement and/or soil), backfilling, compaction, roadway base and pavement restoration due to abandoned gas facilities, only if removed by Contractor. If operating status of gas facilities cannot be determined prior to excavation then such facilities shall be considered live and this section shall fully apply. The excavation around fully exposed live gas facilities along and within limits of excavation (not crossings) shall be covered by this section also (not shown on “Gas Cost Sharing Work Standard Sketch No. 5”), however the support requirement, if any is required, of such facilities is beyond the scope of these specifications and therefore shall be the responsibility of facility operator to determine and prescribe, at no cost to the City contract, but shall be a matter of adjustment between the Contractor and facility operator.

3. Payment Restriction:

No special care excavation shall be paid for abandoned gas facilities paralleling and/or encroaching excavation and therefore are not in direct interference with City work. Except as allowed in this section, the bid item specified under this section shall not be used in combination with items covered under other sections for work done due to a particular gas facility. This item shall not be paid for new gas facilities when trenching for such new facilities has been performed by the Contractor of record in common with trench excavation for City Work (overlapping trench limits). The cost of excavating with care as defined in this section shall be deemed included in the cost of trench excavation for the new gas facilities. This restriction shall apply even if such gas common trench excavation is not part of the contract. If facilities are in direct interference with City work, meaning that “Minimum Clearances” described in “General Provisions; Gas Cost Sharing Work Paragraph No. 8” cannot be maintained and excavation has to be temporarily or permanently abandoned then this particular location shall become a test pit and dealt with as specified in Section 6.07 and “General Provisions; Gas Cost Sharing Work Paragraphs Nos. 2 and 8”.

4. Method Of Construction:

All excavation in the vicinity of gas facilities shall be as required by NYS Industrial Code 753. Where these facilities are paralleling and located two (2) feet or less from the limits of the proposed excavation, the Contractor shall use hand excavation methods (pick and shovel or hand held power tools) to ascertain the clearances of these facilities with respect to the proposed excavation. Once the location of these facilities with respect to the proposed excavation is verified to the satisfaction of the Resident Engineer, the Contractor shall then proceed with a combination of hand and machine excavation as required preserving the integrity of the facilities. The installation of timber supports or underpinning, when soil foundation cannot fully support partially exposed pipes, may be required to prevent pipe movement as directed by the Resident Engineer.

5. Method Of Payment:

The unit price for this work item shall be based on cubic yard (CY) of average excavation with care and, is to be considered as an incremental cost for performing City work with gas facilities interferences.

6. Method Of Measurement:

A. For Paralleling Facilities: Volume calculated as: Depth as measured from existing street surface to the bottom of unsheeted trench excavation allowable by OSHA regulations, multiplied by, the width measured as one (1) foot from the face of excavation toward the center of excavation, multiplied by

the length of parallel facility, divided by twenty-seven (27) cubic feet per cubic yard (See “Gas Cost Sharing Work Standard Sketch No. 5”). The gas facility is no longer considered to be in interference once sheeting has been installed, therefore no further compensation for paralleling facilities as described above will be made.

B. For Encroaching Facilities: Volume calculated as: Depth of trench as allowable by OSHA, maximum up to five (5) feet multiplied by, the width of partially exposed pipe plus one (1) foot, multiplied by the length of facility encroachment, divided by twenty-seven (27) cubic feet per cubic yard (See “Gas Cost Sharing Work Standard Sketch No. 5”).

C. Fully Exposed Gas Facilities: (Not shown on “Gas Cost Sharing Work Standard Sketch No. 5”) along and inside trench and/or crossing trench at an angle greater than forty-five (45) degrees and/or a cover depth greater than five (5) feet from the existing street surface. The volume shall be measured as the depth of trench excavation multiplied by the distance measured along the sheeting line between two (2) points of intersections of the gas facilities and the sides of trench excavation, multiplied by the width of trench excavation.

D. For Additional Excavation And Restoration Due To So Called "Loss Trench", When The Integrity Of Pavement And Soil Above And Around Existing Live Gas Facilities Cannot Be Maintained Due To Its Lack Of Cohesiveness: Volume shall be calculated as: Depth of unsheeted trench excavation multiplied by width measured as distance of facility from closest edge of unsheeted excavation plus, width of facility proper plus, one (1) foot or a maximum width of three (3) feet multiplied by length of facility fully exposed divided by, twenty-seven (27) cubic feet per cubic yard (not shown on “Gas Cost Sharing Work Standard Sketch No. 5”).

E. For Facilities Crossing Excavation For Catch Basins, Or Chutes Installations (When NYCDEP Funded) Or Fire Hydrant Branch Connections, Or Unsheeted Water Main Trench, Or House Sewer And/Or Water Services: Volume calculated as: Depth as measured from existing street surface to the bottom of the trench excavation multiplied by, the width taken as the outside diameter of pipe or the width of structure plus one (1) foot on either side (two (2) feet), multiplied by, the length of exposed facility crossing the trench, divided by twenty-seven (27) cubic feet per cubic yard (not shown on “Gas Cost Sharing Work Standard Sketch No. 5”).

Overlapping volume dimensions measured as described above may occur when multiple facilities are paralleling excavations, encroaching excavations or crossing catch basins and catch basin chute installations. In such cases, all such facilities shall be counted as one limited by the extreme pipes, faces (See “Gas Cost Sharing Work Standard Sketch No. 2”). The volume shall then be calculated as described above.

7. Price To Cover:

The bid price shall also cover all additional supervision, labor, material, equipment and insurance necessary to excavate while protecting and maintaining (excluding supports for fully exposed live gas) gas facilities without disruption of service to the public and in accordance with contract specifications. The price shall also include, changes of sheeting method and excavation width configuration where necessary to accommodate gas facilities in their existing locations; difficulties during the installation of catch basins, chute connections, hydrant branch, and house sewer and water connections under or over gas facilities; loss of productivity due to slower rate of excavation (special care) during excavation, including the use of such methods as: hand excavation around existing single and multiple facilities, extra excavation and backfilling due to lost trench because of existing and adjacent gas facilities, compaction, removal of sheeting from the facilities, extra roadway base restoration and temporary pavement, associated maintenance and protection of traffic, barricades, and traffic plates that may be required to temporarily close and/or complete the work.

SECTION 6.06A - Special Care Excavation and Backfilling for Transmission Mains. (Transmission Main is described as any gas main with a MAOP greater than 124 psig)

1.Description:

Under this section, the contractor shall provide all labor, materials (except for sand to be utilized for backfill of a one-foot envelope around the facility to be furnished by the facility operator), equipment, and incidentals required to support and protect the integrity of Gas Transmission Main during excavations. This facility is owned by the gas company operating in the area, hereafter referred to as facility operator. The work shall be performed in accordance with the contract plans, specifications and at the directions of the Resident Engineer in consultation with authorized representatives of the facility operator.

2.Applicability of Section:

This section shall apply to Transmission Main of various sizes located within any excavation sheeted or unsheeted (excavation refers to any excavation performed for city work and includes excavations performed that are to be subsequently unsheeted/sheeted using approved shoring methods and paralleling, encroaching, and crossing any excavation. Parallel facilities are not exposed at any time during excavation (within 2' of edge of excavation)). Encroaching facilities are partially/fully exposed inside the limit of excavation. This section shall also apply to gas facility crossing catch basins excavation and catch basins sewer connections (chutes), water mains, fire hydrant branch connections, sanitary sewer, storm sewer, combination sewer, house sewer and/or water service connections excavations. The excavation around fully exposed live gas facilities along and within limits of excavation shall be covered by this section also, however the support requirement, if any is required, of such facilities is beyond the scope of these specifications and therefore shall be the responsibility of facility operator to determine and prescribe, at no cost to the City contract, but shall be a matter of adjustment between the contractor and facility operator.

3.Payment Restriction:

The bid item specified under this section shall not be used in combination with items covered under other sections for work done due to a particular gas facility. This item shall not be paid for new gas facilities when trenching for such new facilities has been performed by the contractor of record in common with trench excavation for City Work (overlapping trench limits). The cost of excavating with care as defined in this section shall be deemed included in the cost of trench excavation for the new gas facilities. This restriction shall apply even if such gas common trench excavation is not part of the contract. If facilities are in direct interference with City work, meaning that "minimum clearances" described in the General Provisions for Gas Cost Sharing (Para. No.8) cannot be maintained, the excavation shall be abandoned and the contractor shall be compensated as per the provisions specified in Paragraphs Nos. 5 and 6 of this item (6.06A).

4.Method of Construction:

All excavations in the vicinity of gas facilities shall be as required by NYS Industrial Code 753. No saw cutting of pavement or masonry for gas mains having less than 2 feet of cover to break asphalt/concrete as determined by the facility operator. The contractor shall use power excavation for the removal of pavement or masonry but only to the depth of such pavement or masonry **(breaking of pavement or masonry shall be done by means of hand held pneumatic breaking equipment).** Upon removal of pavement or masonry the contractor shall use hand excavation methods only **(pick and shovel; no power tools)** to ascertain the clearances of these facilities with respect to the proposed excavation. Once the location of these facilities with respect to the proposed excavation is verified to the satisfaction of the Resident Engineer and the facility operator the contractor shall then proceed with hand only within the zone of protection described as 2 feet from the face of the facility in all directions of the facility as required to

preserve the integrity of the facility. Once outside of the zone of protection as described above the contractor may use a combination of hand and machine to complete the excavation.

5.Method of Payment:

The unit price for this work item shall be based on cubic yard (CY) of average excavation with special care and, is to be considered as an incremental cost for performing City work with gas facilities interferences.

6.Method of Measurement:

A.For Paralleling Facilities:

Volume calculated as: Depth as measured from existing street surface to the bottom of facility,multiplied by, the width measured as two (2) feet from the face of excavation toward the center of excavation, multiplied by the length of parallel facility, divided by twenty-seven (27) cubic feet per cubic yard Only hand excavation shall be utilized within the zone of protection identified as 2 feet from face of facility, beyond 2 feet from the face of facility the contractor can use a combination of hand and machine.

B.For Encroaching Facilities:

Volume calculated as: Depth as measured from existing street surface to the bottom of facility, multipliedby, the width measured as two (2) feet plus the exposed facility toward the center of excavation,multiplied by the length of the encroached facility, divided by twenty-seven (27) cubic feet per cubic yard.Only hand excavation shall be utilized within the zone of protection identified as 2 feet from face offacility, beyond 2 feet from the face of facility the contractor can use a combination of hand and machine.

C.Fully Exposed Gas Facilities:

Volume calculated as: Depth as measured from existing street surface to the bottom of facility, multipliedby, the width measured as two (2) feet from the face of the facility on either side plus the facility, multipliedby the length of the facility, divided by 27 cubic feet per cubic yard. Only hand excavation shall be utilizedwithin the zone of protection identified as 2 feet from face of facility in all directions, beyond 2 feet fromthe face of facility in all directions the contractor can use a combination of hand and machine.

D.For Additional Excavation And Restoration Due To So Called "Loss Trench", When The IntegrityOf Pavement And Soil Above And Around Existing Live Gas Facilities Cannot Be maintained DueTo Its Lack of Cohesiveness:

Volume shall be calculated as: Depth of unsheeted trench excavation multiplied by width measured asdistance of facility from closest edge of unsheeted excavation plus, width of facility proper plus, one (1) footor a maximum width of three (3) feet multiplied by length of facility fully exposed divided by, twenty-seven(27)cubic feet per cubic yard (not shown on "Gas Cost Sharing Work Standard Sketch No. 5").

E.For Facilities Crossing Excavation For Catch Basins, Or Chutes Installations (When NYCDEPFunded) Or Fire Hydrant Branch Connections, Or Unsheeted Water Main Trench, Or House SewerAnd/Or Water Services:

Volume calculated as: Depth as defined above multiplied by, the width taken as the outside diameter ofpipe or the width of structure plus one (1) foot on either side (two (2) feet), multiplied by, the length ofexposed facility crossing the trench, divided by twenty-seven (27) cubic feet per cubic yard (not shown on"Gas Cost Sharing Work Standard Sketch No. 5").

7.Price to Cover:

The bid price shall also cover all additional supervision, labor, material, equipment and insurance necessary to excavate while protecting and maintaining (excluding supports for fully exposed live gas) gas facilities

without disruption of service to the public and in accordance with contract specifications. The price shall also include, changes of sheeting method and excavation width configuration where necessary to accommodate gas facilities in their existing locations; difficulties during the installation of catch basins, chute connections, hydrant branch, and house sewer, sanitary sewer, storm sewer, combination sewer and water connections under or over gas facilities; loss of productivity due to slower rate of excavation (special care) during excavation, compaction, removal of sheeting from the facilities, extra roadway base restoration and temporary pavement, associated maintenance of traffic, barricades, and traffic plates that may be required to temporarily close and/or complete the work. Breaking shall be done by means of hand held pneumatic breaking equipment. Inspection of exposed mains shall be performed by facility operator in a timely fashion and shall not unduly impede contractor's progress or productivity.

SECTION 6.07 - Test Pits For Gas Facilities.

1. Description:

Under this section, the Contractor shall furnish all labor, materials, insurance, equipment and appliances necessary to excavate, sheet and, maintain test pits at locations approved by the Resident Engineer in consultation with the facility operator. Test pits shall be dug in order to ascertain exact locations, cover and invert elevations, clearances, alignment and operating status (live or dead) of existing gas facilities. The Contractor shall inspect jointly with the Resident Engineer and facility operator, gas facilities and other structures uncovered, take all relevant measurements and elevations as directed by the Resident Engineer. Tests to determine operating status of gas facilities shall be performed by facility operator. The pits shall be covered with steel plates during daytime nonworking hours, and uncovered, as required, until the inspection work is completed. Testing of gas facilities may require a maximum of four (4) hours. Then, the pits shall be backfilled with clean fill, and resurfaced with temporary pavement. All traffic shall be maintained and all safety measures as stipulated shall be complied with.

2. Methods Of Construction:

A. Excavation: Existing pavement to be removed shall be neatly cut along lines of removal with a saw or other approved equipment which leaves a neat straight joint line along the juncture with subsequently replaced pavement. Excavation in the vicinity of utilities and other structures shall be performed using hand tools. Use of hand operated pneumatic and electric jackhammers will be permitted only for breaking pavement and removal of masonry, concrete and boulders, or as otherwise directed by the Resident Engineer. The Contractor shall properly dispose of all materials excavated from test pits away from site. Test pits shall be excavated at locations shown on the contract drawings or as directed by the Resident Engineer. Additional test pits may be required and shall be excavated where required, as ordered by the Resident Engineer. All test pits shall be excavated to a depth and size necessary to locate the existing facilities. Sheeting shall be used when depth of excavation exceeds five (5) feet. The sheeting required shall be furnished and installed in full compliance with the State of New York and Federal Safety Codes requirements and as specified in contract, whichever is more stringent. Care shall be taken that no existing gas facilities or other structures are broken or damaged. All broken or damaged facilities shall be reported immediately to facility operator who shall decide whether such facilities shall be repaired or replaced by company forces or by City contractor and in conformance with “General Provisions; Gas Cost Sharing Work Paragraph No. 9”. Contractor shall excavate all material encountered, including large masses of concrete, cemented masonry and boulders, as directed by the Resident Engineer. Any type of excavation protection used, shall satisfy the following:

   (a) Industrial Code Rule 753.
   (b) Prevent injury to workers and the public, and avoid damage to existing water, sewer, and gas pipes or other structures, and to pavements and their foundations, through caving or sliding of the banks of the excavation.

   Should it become necessary, as determined by the Resident Engineer, to enlarge any test pit in any dimension after sheeting has been placed, the Contractor shall remove portions of the sheeting, as necessary, enlarge the test pits as directed, and replace the sheeting without additional compensation for this work other than for the additional volume of material excavated.

B. Maintenance Of Test Pits: Excavated test pits shall be maintained free of debris and kept dry by the Contractor in order to permit the inspection and measurements and to determine the locations of facilities. In order to accomplish this, Contractor shall, upon completion of excavation and placement of sheeting (if depth greater than five (5) feet), furnish and install adequate steel plates and posting over the excavated pits and shall temporarily remove all equipment debris and workers, and relocate barricades in order to open the full width of street to traffic during nonworking hours. The Contractor shall then, at no additional cost, relocate such barricades, barrels, cones and other warning devices and remove steel plates, as and when directed by the Resident Engineer to facilitate the inspection of

exposed facilities. When work is being performed and the pits are not covered with steel plates, the Contractor shall provide complete and safe access to the test pits as may be required, and he shall provide construction barricades and maintain traffic at all times as shown or as directed by the Resident Engineer. Upon completion of test pit inspection by the Resident Engineer, the pit shall be backfilled by the Contractor as specified in contract, except that backfill material shall conform to contract specifications for such purpose.

C. Pavement And Sidewalk Restoration: After backfilling is completed, the Contractor shall construct a temporary pavement consisting of a minimum of four (4) inches thick asphaltic concrete mixture in roadway areas or a two (2) inches thick asphaltic concrete mixture in sidewalk areas in order to maintain existing pedestrian and vehicular traffic. This temporary pavement shall be maintained until permanent pavement and sidewalk replacement is constructed as specified in contract.

3. Measurements:

The quantity to be measured for payment shall be the number of cubic yards of material removed from within the limits of the pit dimensions as directed by the Resident Engineer. The volume occupied by existing pipes or other structures remaining within the maximum payment lines will not be deducted from the total volume measured except, where the cross sectional area of these facilities exceeds four (4) square feet. As determined by the Resident Engineer, the quantity measured for payment may be proportionate to a fair and reasonable estimate of gas responsibility in the total volume excavated.

4. Price To Cover:

The contract price bid per cubic yard for test pits shall cover all additional costs of labor, material, insurance, equipment, appliances and incidentals required to excavate test pits, including removal and disposal of excavated materials, sheeting, steel plating, backfill, compaction and temporary pavement and sidewalk restoration all in accordance with the specifications and as directed by the Resident Engineer. The price shall also include the cost of providing safe access to the excavation by facility operator for the performance of certain test to determine operating status of gas facilities prior to City work. The price shall also include support and protection of all gas facilities crossing excavation, paralleling and/or encroaching any face of excavation.

SECTION 6.08 - “NO TEXT”

SECTION 6.09 - Trench Excavation and Backfill for New Gas Mains and Services (For National Grid Work Only)

1. Description:

Under this section, the contractor shall furnish all labor, materials, equipment, insurance, permits and incidentals required to break/remove roadway and sidewalk pavement, excavate, backfill and restore gas trenches. The trench to be excavated shall be determined by the size of the gas facility to be installed. The work shall be performed in accordance with applicable specifications, and/or at the direction of the Resident Engineer in consultation with the facility operator.

2. Materials:

All materials used to excavate and prepare trenches shall be supplied by the Contractor and be approved by the facility operator in consultation with the Resident Engineer.

3. Method of Construction:

Excavation – The Contractor shall saw cut and/or break and remove existing roadway which may include

but is not limited to, asphalt, concrete and cobblestone, utilizing approved equipment that leaves a neat straight joint line along the juncture with subsequently replaced pavement. Prior to starting the trenching operation, the contractor shall excavate the appropriate gas main tie-in pits at the extremities of the gas main sections to be replaced. Test pits shall be excavated to determine exact location of all tie-in pits and at appropriate intervals along proposed trench excavation to verify lane and clearances as shown on the contract plans. The tie-in pits shall be adequately protected by the contractor using wood fencing or steel traffic plates until such time when the facility operator has completed the tie-in work. The Contractor shall be permitted to excavate utilizing a combination of machine and hand excavation, as field conditions warrant, and as directed by the facility operator. The trench shall be adjusted so as to provide for a nominal cover on the new gas facilities or as required based on field conditions, applicable specifications, or as directed by the facility operator in consultation with the Resident Engineer. The width of the trench shall be as directed by the facility operator in consultation of the Resident Engineer. The bottom of the trench shall be graded smooth with a minimum cushion of 3 inches of clean sand and in conformance with applicable specification and be compacted, to minimize initial settlement and to avoid "point" support of new gas facilities. All stones projecting into the trench bottom shall be removed, and the voids backfilled before the new gas facilities are installed. Where streets are not to final grade, the cover shall be measured from the final grade, or the existing grade, whichever provides the deeper trench. Excavation in the vicinity of utilities and other structures shall be performed using hand tools. The contractor shall properly dispose of all materials excavated away from site. Size and location of excavation shall be as directed by the facility operator in consultation with the Resident Engineer. Trenches shall be excavated to a depth and size necessary to facilitate the installation of the new gas facility and in conformance with the applicable specification. All existing facilities that are encountered during trench excavating shall be protected in a manner suitable to the facility operator in consultation with the Resident Engineer. Tight sheeting shall be used, as required, based on field conditions and/or when the depth of excavation is equal to or greater than five feet. Skeleton type sheeting will not be permitted. The sheeting required shall be furnished and installed in full compliance with the State of New York and Federal Safety Code requirements and in compliance with applicable specifications and/or as directed by the facility operator in consultation with the Resident Engineer. Care shall be taken that no existing gas facilities or other structures are broken or damaged. Contractor shall excavate all material encountered necessary to facilitate the installation of the new gas facilities, and as directed by the facility operator. Care should be taken to avoid damage to existing utility facilities and structures, and to pavements and their foundations, and to avoid caving or sliding banks within the excavation.

Maintenance of Trench Excavation - Excavated trenches shall be maintained free of debris and kept dry by the contractor. In order to accomplish this, contractor shall, upon completion of excavation and placement of sheeting (as required and/or if depth is equal to or greater than five feet), furnish and install adequate steel plates, as directed by the facility operator in consultation with the Resident Engineer, and posting over the excavated trenches and shall temporarily remove all equipment debris and workers, and relocate barricades in order to open the full width of street to traffic during non-working hours, as required based on DOT requirements. National Grid forces will perform all live gas main connections, dead gas main cut-outs, and/or service work associated with disconnecting and reconnecting from old to new gas main The Contractor shall then, at no additional cost, relocate such barricades barrels, cones and other warning devices and remove steel plates, as and when directed by the facility operator in consultation with the Resident Engineer to facilitate the installation of the new gas facilities. When work is being performed and the excavations are not covered with steel plates, the Contractor shall provide complete and safe access to the trench as may be required, and shall provide construction barricades and maintain traffic at all times as shown or as directed by the facility operator in consultation with the Resident Engineer. The contractor has the responsibility to maintain and set to grade all National Grid hardware during backfill and pavement restoration. Upon completion of installation of the new gas facility, the trench excavation shall be backfilled by the contractor in accordance with Contract requirements and all backfill material shall conform to contract specifications for such purpose.

Pavement and Sidewalk Restoration - After backfilling is completed, the contractor shall install temporary pavement consisting of six inches (6”) thick asphaltic concrete mixture in roadway areas or a two inches (2”) thick asphaltic concrete mixture in sidewalk areas in order to maintain existing pedestrian and vehicular traffic. This temporary pavement shall be maintained until permanent replacement as specified in contract. Permanent pavement restoration shall be as required by the appropriate contract specifications and as

directed by the Resident Engineer.

4. Method of Measurement:

The quantity to be measured for payment shall be the number of cubic yards (C.Y.) of trench actually excavated, including roadway pavement, base and/or sidewalk concrete removed within the limits of the trench as directed by the Resident Engineer in consultation with the facility operator. The volume occupied by existing pipes or other structures will be deducted from the total volume measured as shown on contract drawing(s) Title: EP-7 SECT. 6.09 GAS SPECIALTY CONTRACTOR WORK, or as encountered based on existing field conditions.

5. Price to Cover:

The unit price bid per cubic yard for excavation shall include the cost of all supervision, labor, material, equipment, insurance and incidentals necessary to complete excavation trenches, including backfill, compaction testing and restoration of trenches and tie-ins pits as specified or shown on the contract, plans. The bid price shall also include the cost of coordinating the sewer and water main work to be performed by the contractor with the gas installation work to be performed by others. The price shall also include, associated maintenance of traffic, and traffic plates and openings and closings of plates as may be required in order to provide access to the facility operator during the new gas facility installation, and installing, removing and maintaining tight sheeting that may be required, cut, break and remove various thickness of surface and base pavement, excavate by hand, furnish, place and compact, in compliance with DOT requirements, clean sand backfill following installation of the gas facility. Any required removing, trucking, storing, and disposing of material shall be deemed included in the unit price. The price shall also include the cost of providing temporary pavement restoration. Permanent pavement restoration shall be deemed included in this item, as required and as directed by the Resident Engineer.

SECTION 6.09a Trench Excavation and Backfill for New Gas Mains and Services (For Con Edison Work Only)

1. Description:

Under this section, the contractor shall furnish all labor, materials, equipment, insurance, permits and incidentals required to break/remove roadway and sidewalk pavement, excavate, backfill and restore gas trenches. The trench to be excavated shall be determined by the size of the gas facility to be installed. The work shall be performed in accordance with applicable specifications, and/or at the direction of the Resident Engineer in consultation with the facility operator.

2. Materials:

All materials used to excavate and prepare trenches shall be supplied by the Contractor and be approved by the facility operator in consultation with the Resident Engineer. Clean sand backfill material shall be used and shall conform to Con Edison specification EO-1181-rev.6, General Specification for Backfilling of Trench and Small Openings.

3. Method of Construction:

Excavation – The Contractor shall saw cut and/or break and remove existing roadway which may include but is not limited to, asphalt, concrete and cobblestone, utilizing approved equipment that leaves a neat straight joint line along the juncture with subsequently replaced pavement. Prior to starting the trenching operation, the contractor shall excavate the appropriate gas main tie-in pits at the extremities of the gas main sections to be replaced. Test pits shall be excavated to determine exact location of all tie-in pits and at appropriate intervals along proposed trench excavation to verify lane and clearances as shown on the contract plans. The tie-in pits shall be adequately protected by the contractor using wood fencing or steel traffic plates until such time when the facility operator has completed the tie-in work. The Contractor shall be permitted to excavate utilizing a combination of machine and hand excavation, as field conditions warrant, and as directed by the facility operator. The trench shall be adjusted so as to provide for a nominal

cover on the new gas facilities or as required based on field conditions, applicable specifications, or as directed by the facility operator in consultation with the Resident Engineer. The width of the trench shall be as directed by the facility operator in consultation of the Resident Engineer. The width and depth of the trench shall conform to Con Edison Gas Operations drawing 309495 rev. 4, Trench Excavation for Gas Mains Up to 350 PSIG, or as directed by the facility operator in consultation of the Resident Engineer. The bottom of the trench shall be graded smooth with a minimum cushion of 3 inches of clean sand and in conformance with applicable specification and be compacted, to minimize initial settlement and to avoid "point" support of new gas facilities. All stones projecting into the trench bottom shall be removed, and the voids backfilled before the new gas facilities are installed. Where streets are not to final grade, the cover shall be measured from the final grade, or the existing grade, whichever provides the deeper trench. Excavation in the vicinity of utilities and other structures shall be performed using hand tools. The contractor shall properly dispose of all materials excavated away from site. Size and location of excavation shall be as directed by the facility operator in consultation with the Resident Engineer. Trenches shall be excavated to a depth and size necessary to facilitate the installation of the new gas facility and in conformance with the applicable specification. All existing facilities that are encountered during trench excavating shall be protected in a manner suitable to the facility operator in consultation with the Resident Engineer. Tight sheeting shall be used, as required, based on field conditions and/or when the depth of excavation is equal to or greater than five feet. Skeleton type sheeting will not be permitted. The sheeting required shall be furnished and installed in full compliance with the State of New York and Federal Safety Code requirements and in compliance with applicable specifications and/or as directed by the facility operator in consultation with the Resident Engineer. Care shall be taken that no existing gas facilities or other structures are broken or damaged. Contractor shall excavate all material encountered necessary to facilitate the installation of the new gas facilities, and as directed by the facility operator. Care should be taken to avoid damage to existing utility facilities and structures, and to pavements and their foundations, and to avoid caving or sliding banks within the excavation.

Maintenance of Trench Excavation - Excavated trenches shall be maintained free of debris and kept dry by the contractor. In order to accomplish this, contractor shall, upon completion of excavation and placement of sheeting (as required and/or if depth is equal to or greater than five feet), furnish and install adequate steel plates, as directed by the facility operator in consultation with the Resident Engineer, and posting over the excavated trenches and shall temporarily remove all equipment debris and workers, and relocate barricades in order to open the full width of street to traffic during non-working hours, as required based on DOT requirements. Con Edison forces will perform all live gas main connections, dead gas main cut-outs, and/or service work associated with disconnecting and reconnecting from old to new gas main The Contractor shall then, at no additional cost, relocate such barricades barrels, cones and other warning devices and remove steel plates, as and when directed by the facility operator in consultation with the Resident Engineer to facilitate the installation of the new gas facilities. When work is being performed and the excavations are not covered with steel plates, the Contractor shall provide complete and safe access to the trench as may be required, and shall provide construction barricades and maintain traffic at all times as shown or as directed by the facility operator in consultation with the Resident Engineer. The contractor has the responsibility to maintain and set to grade all Con Edison hardware during backfill and pavement restoration. Upon completion of installation of the new gas facility, the trench excavation shall be backfilled by the contractor in accordance with Contract requirements and all backfill material shall conform to contract specifications for such purpose.

Pavement and Sidewalk Restoration - After backfilling is completed, the contractor shall install temporary pavement consisting of six inches (6”) thick asphaltic concrete mixture in roadway areas or a two inches (2”) thick asphaltic concrete mixture in sidewalk areas in order to maintain existing pedestrian and vehicular traffic. This temporary pavement shall be maintained until permanent replacement as specified in contract. Permanent pavement restoration shall be as required by the appropriate contract specifications and as directed by the Resident Engineer.

4. Method of Measurement:

The quantity to be measured for payment shall be the number of cubic yards (C.Y.) of trench actually excavated, including roadway pavement, base and/or sidewalk concrete removed within the limits of the trench as directed by the Resident Engineer in consultation with the facility operator. The volume occupied

by existing pipes or other structures will be deducted from the total volume measured as shown on contract drawing(s) Title: EP-7 SECT. 6.09 GAS SPECIALTY CONTRACTOR WORK, or as encountered based on existing field conditions.

5. Price to Cover:

The unit price bid per cubic yard for excavation shall include the cost of all supervision, labor, material, equipment, insurance and incidentals necessary to complete excavation trenches, including backfill, compaction testing and restoration of trenches and tie-ins pits as specified or shown on the contract, plans. The bid price shall also include the cost of coordinating the sewer and water main work to be performed by the contractor with the gas installation work to be performed by others. The price shall also include, associated maintenance of traffic, and traffic plates and openings and closings of plates as may be required in order to provide access to the facility operator during the new gas facility installation, and installing, removing and maintaining tight sheeting that may be required, cut, break and remove various thickness of surface and base pavement, excavate by hand, furnish, place and compact, in compliance with DOT requirements, clean sand backfill following installation of the gas facility. Any required removing, trucking, storing, and disposing of material shall be deemed included in the unit price. The price shall also include the cost of providing temporary pavement restoration. Permanent pavement restoration shall be deemed included in this item, as required and as directed by the Resident Engineer.

UTL 6.11(NG) – Supports for Parallel Fully Exposed Gas Mains in Trench.

1. Description:

Under this section, the Contractor shall provide all labor, materials, equipment, insurance and incidentals required to support parallel fully exposed gas mains during excavations. The gas company operating in the area, (facility operator), owns these facilities. The work shall be performed in accordance with the contract plans, specifications and at the directions of the Resident Engineer in consultation with authorized representatives of the facility operator.

2. Applicability of Section:

This section shall apply to live gas mains of various sizes fully exposed and parallel within any sheeted or unsheeted excavation, (unsheeted excavation refers to any excavation performed for city work and includes excavations performed that are to be subsequently sheeted using approved methods). This item only applies to the physical supports for parallel fully exposed gas mains and does not include excavation. The excavation around the gas mains will be compensated under other applicable sections.

3. Payment Restriction:

No supports shall be paid for abandoned gas facilities paralleling and/or encroaching excavation and therefore are not in direct interference with City work. The bid item specified under this section shall not be used in combination with items covered under other sections for work done due to a particular gas facility. This item shall not be paid for new gas facilities when trenching for such new facilities has been performed by the Contractor of record in common with trench excavation for City Work (overlapping trench limits). The cost of the supports as defined in this section shall be deemed included in the cost of trench excavation for the new gas facilities. This restriction shall apply even if such gas common trench excavation is not part of the contract.

4. Method of Construction:

All gas main supports shall be constructed in accordance with Gas Cost Sharing Work Sketch No.1 and Sketch No.1A.

5. · Method of Payment:

Each (Ea.) gas main support as described in these specifications shall be counted for payment.

6. Method Of Measurement:

The contractor shall be paid for each (Ea.) gas main support installed.

7. Price To Cover:

The bid price shall also cover all additional supervision, labor, material, equipment and insurance necessary to install and maintain supports for parallel fully exposed live gas mains without disruption of service to the public and in accordance with contract specifications. The price shall also include, changes of sheeting method and excavation width configuration where necessary to accommodate gas facilities in their existing locations, loss of productivity due to installation of gas main supports, including the use of such methods as: counter sinking of support members, compaction, extra roadway base restoration and temporary pavement, associated maintenance and protection of traffic, barricades, and traffic plates that may be required to temporarily close and/or complete the work.

GAS COST SHARING STANDARD SPECIFICATIONS
SCHEDULE GCS-A

Average rate charged by utility companies to Disconnect and Reconnect Gas Services:

1. National Grid - $586.90 per Service/and Visit
2. Con Edison - $524.00 per Service/and Visit

IV - STANDARD SKETCHES; GAS COST SHARING WORK

Hereinafter attached are the following Standard Sketches for Gas Cost Sharing Work:

Sketch No. 1 - Support Requirements For Gas Mains And Services Crossing Excavation Greater Than 4' - 0" Wide At Any Angle

Sketch No. 1A - Support Requirements For Gas Mains Over 16" Diameter Up To And Including 48" Diameter Crossing Excavation At Any Angle

Sketch No. 2 - Typical Methods Of Measurement For Gas Crossings

Sketch No. 3 - Utility Crossings During Catch Basin Chute Connection Pipe Installation

Sketch No. 4 - Utility Crossings During Catch Basin Chute Connection Pipe Installation (Extra Depth)

Sketch No. 5 - Gas Main Encroachment On And/Or Parallel To Excavation Of Unsheeted Trench

GAS COST SHARING WORK (SKETCH NO. 1)

SUPPORT REQUIREMENTS FOR GAS MAINS SUSPENDED IN EXCAVATIONS UP TO 12'-0" WIDE AT ANY ANGLE

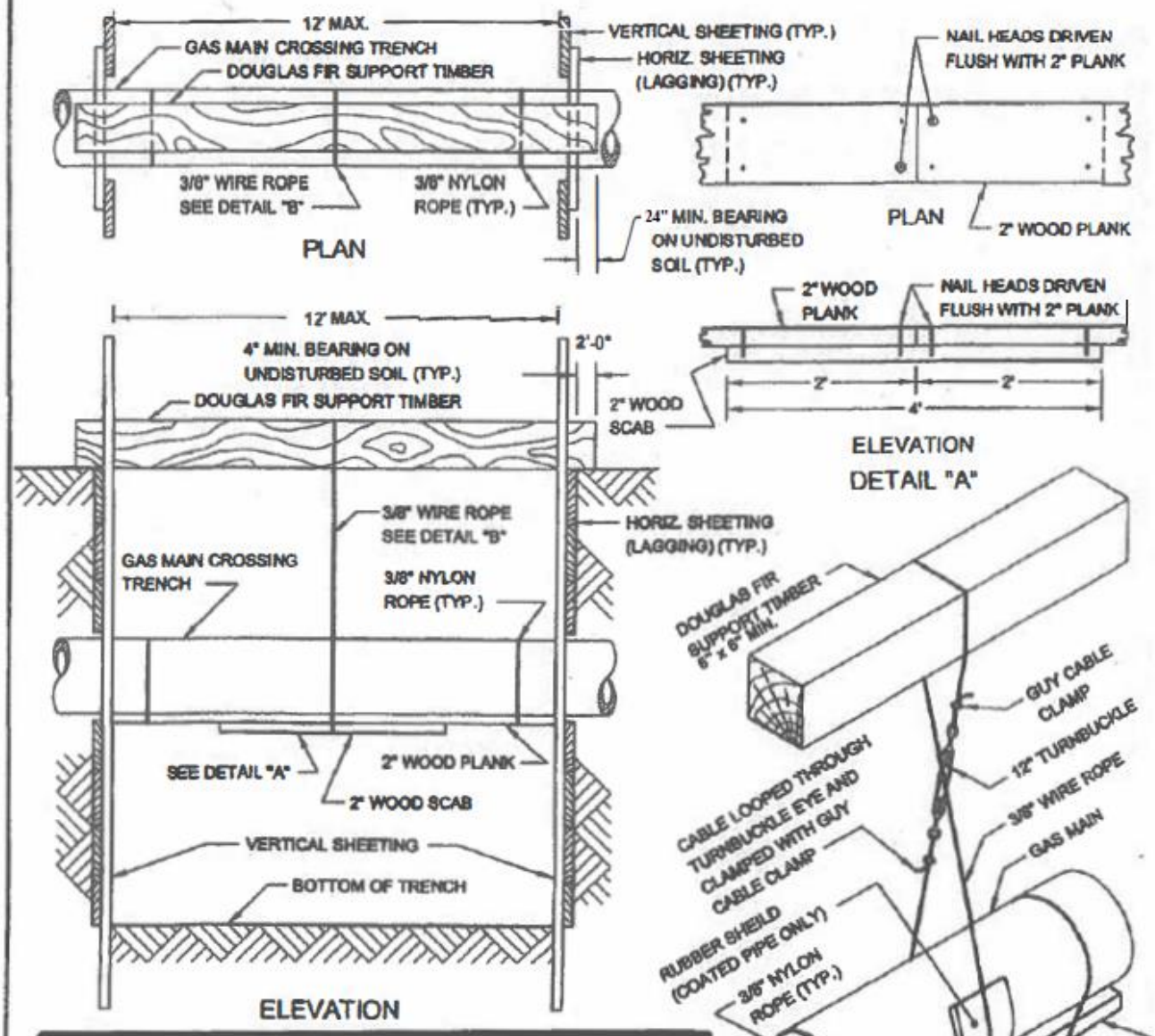

CABLE SUPPORT SPACING

PIPE SIZE	CAST IRON	STEEL	PLASTIC
UP TO 2"	-	10'-0"	3'-0"
3" TO 4"	4'-0"	15'-0"	6'-0"
6" TO 10"	4'-0"	15'-0"	6'-0"
12" OR LARGER	6'-0"	15'-0"	6'-0"

NOTE: SUPPORTS FOR GAS TRANSMISSION FACILITIES SHALL BE REVIEWED WITH GAS ENGINEERING PRIOR TO INSTALLATION.

REVISED DEC. 2019 - LTYP

GAS COST SHARING WORK (SKETCH NO. 1A)
SUPPORT REQUIREMENTS FOR GAS MAINS SUSPENDED IN EXCAVATIONS BETWEEN 12'-0" AND 30'-0" WIDE AT ANY ANGLE

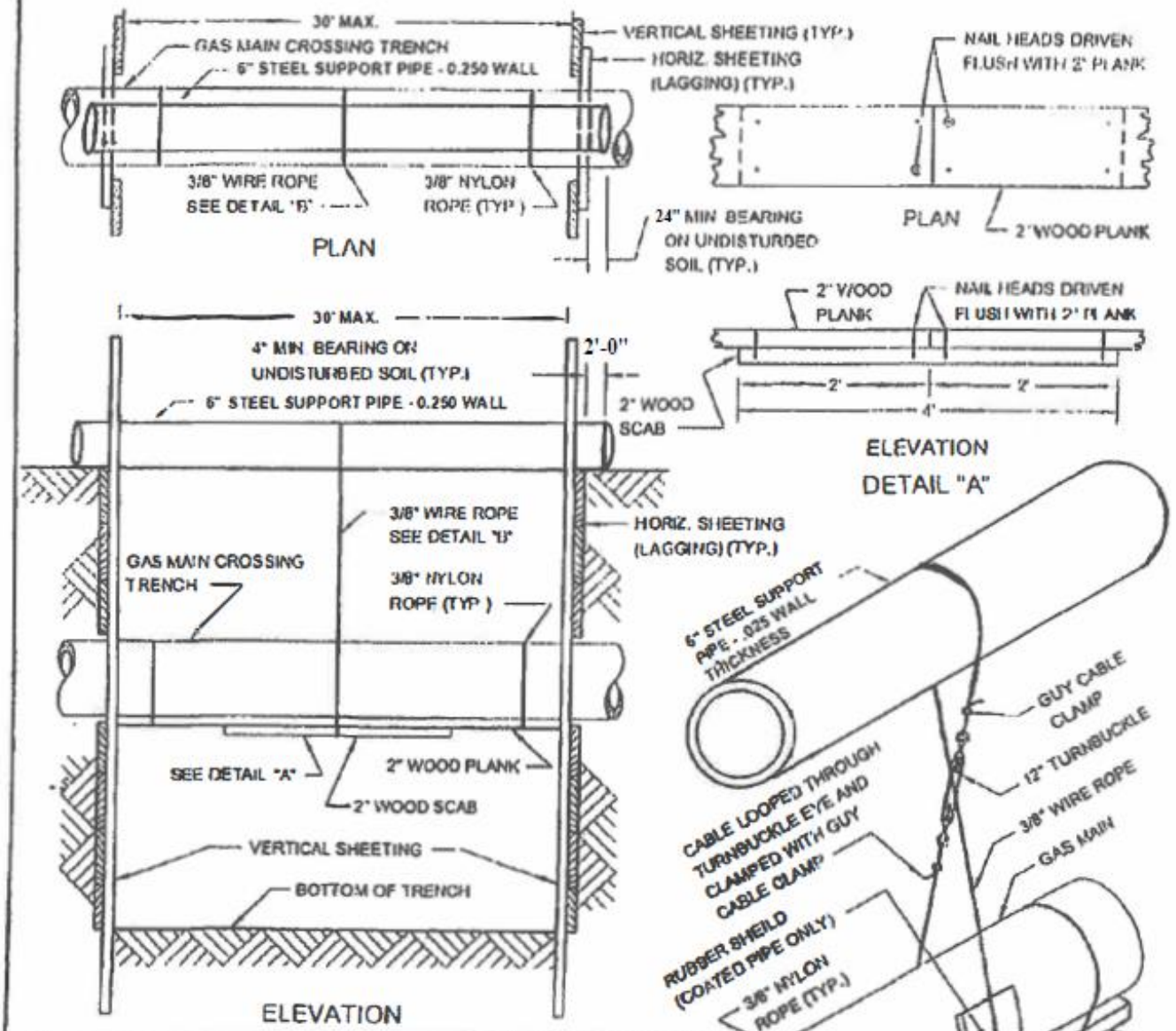

CABLE SUPPORT SPACING			
PIPE SIZE	CAST IRON	STEEL	PLASTIC
UP TO 2"	-	10'-0"	3'-0"
3" TO 4"	4'-0"	15'-0"	6'-0"
6" TO 10"	4'-0"	15'-0"	6'-0"
12" OR LARGER	6'-0"	15'-0"	6'-0"

NOTE: SUPPORTS FOR GAS TRANSMISSION FACILITIES SHALL BE REVIEWED WITH GAS ENGINEERING PRIOR TO INSTALLATION.

GAS COST SHARING WORK (SKETCH NO. 2)

TYPICAL METHODS OF MEASUREMENT FOR GAS CROSSINGS

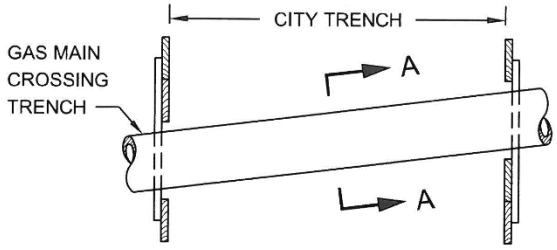

SINGLE FACILITY CROSSING

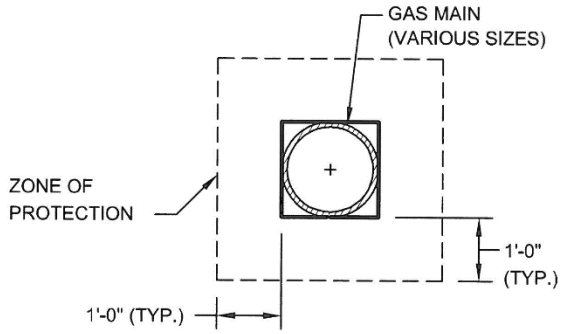

SECTION A-A

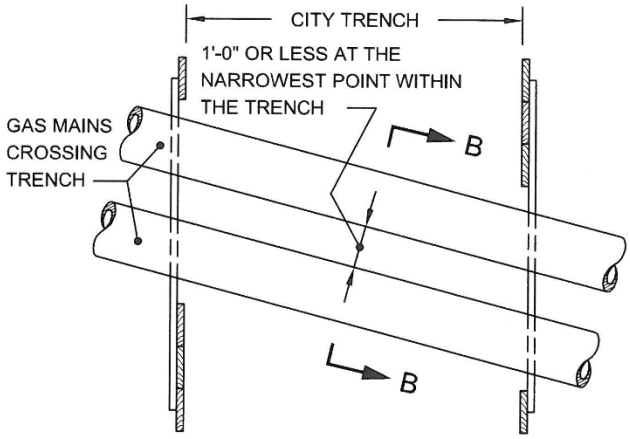

MULTIPLE FACILITIES
(GAS MAINS AT SAME ELEVATION)

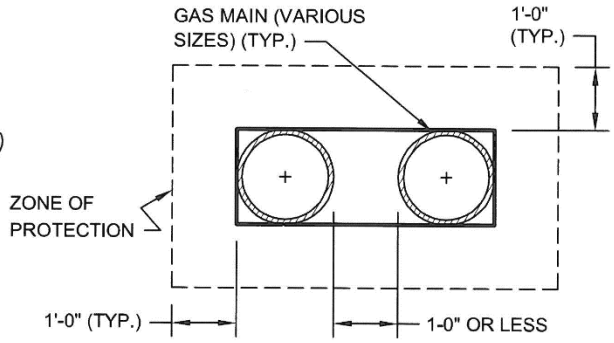

SECTION B-B

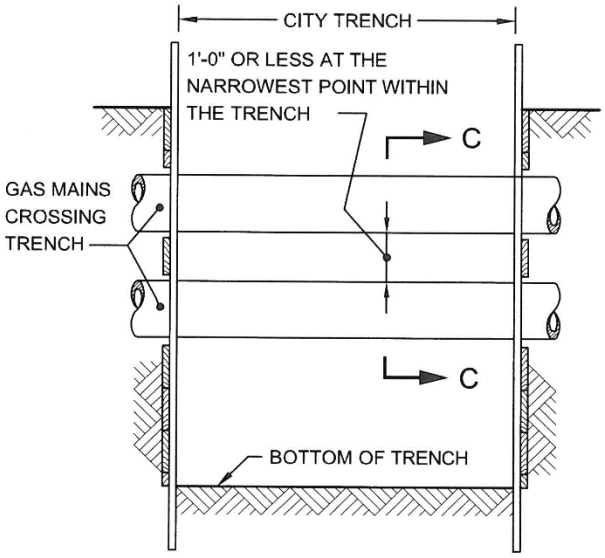

MULTIPLE FACILITIES
(ONE CROSSING AT DIFFERENT ELEVATIONS)

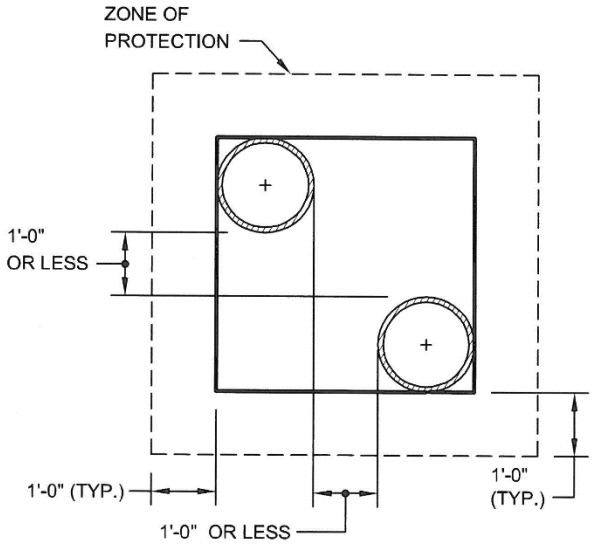

SECTION C-C

NOTE:

GAS MAINS MAY OR MAY NOT BE PARALLEL
TO EACH OTHER.

REVISED SEPT. 2004 - L. ADRIEN
REVISED SEPT. 2004 - J. WONG/W. PATALANO/P. MOY

GAS COST SHARING WORK (SKETCH NO. 3)

UTILITY CROSSINGS DURING CATCH BASIN CHUTE CONNECTION PIPE INSTALLATION

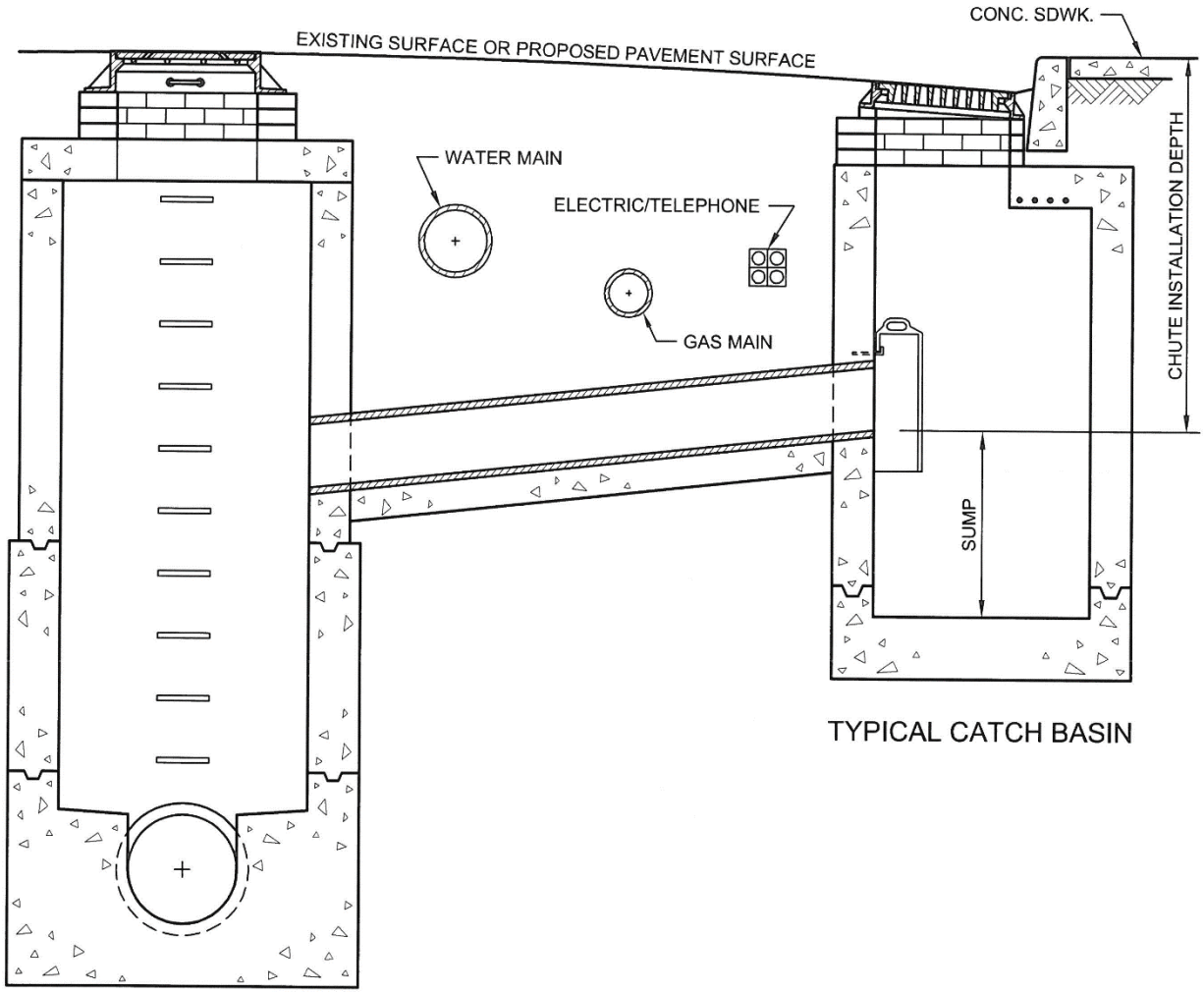

TYPICAL CATCH BASIN

TYPICAL SEWER MANHOLE

REVISED OCT. 2004 - L. ADRIEN
REVISED OCT. 1998 - J. WONG/W. PATALANO/P. MOY

GAS COST SHARING WORK (SKETCH NO. 4)

UTILITY CROSSINGS DURING CATCH BASIN CHUTE CONNECTION PIPE INSTALLATION (EXTRA DEPTH)

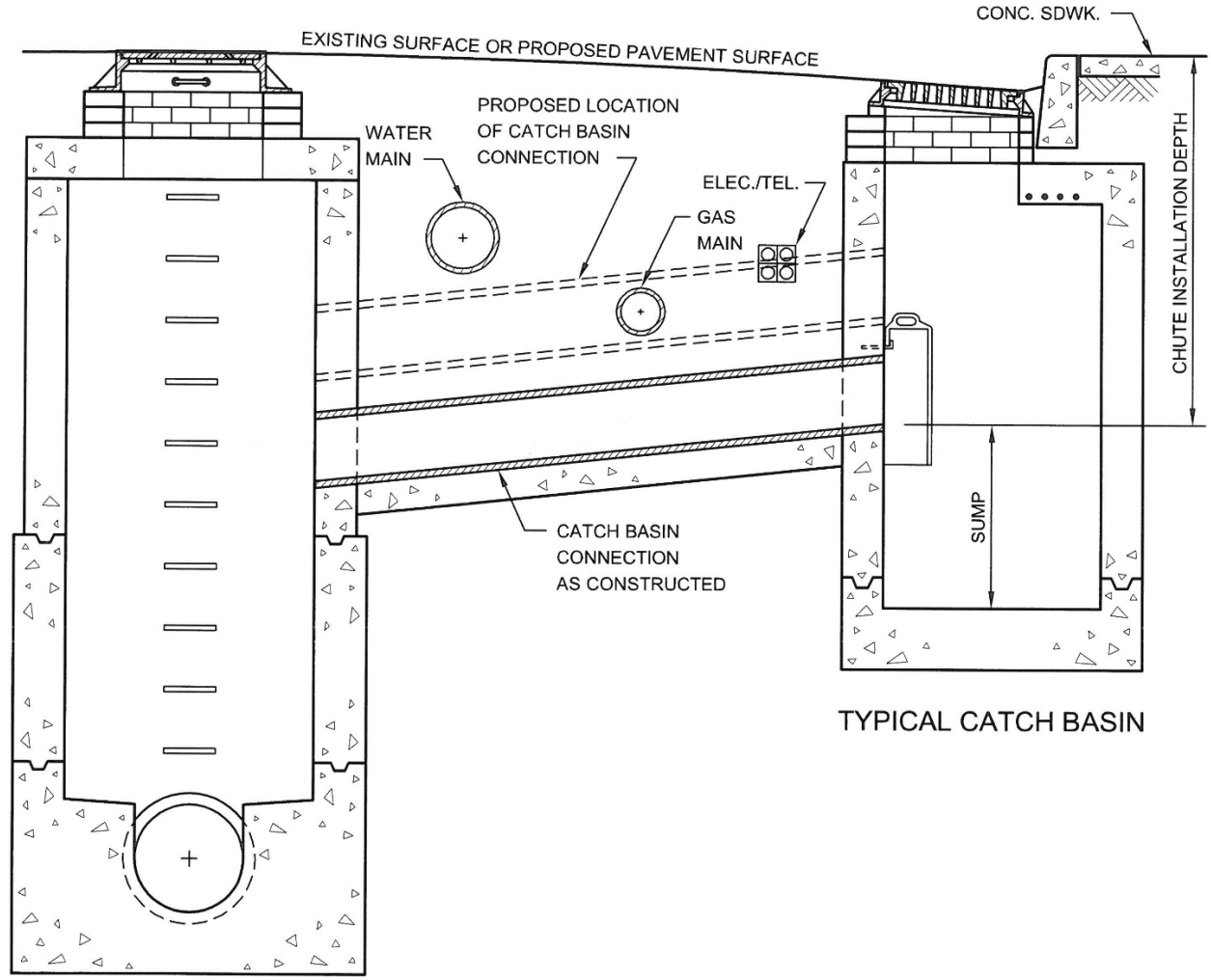

TYPICAL CATCH BASIN

TYPICAL SEWER MANHOLE

REVISED OCT. 2004 - L. ADRIEN
REVISED OCT. 1998 - J. WONG/W. PATALANO/P. MOY

GAS COST SHARING WORK (SKETCH NO. 5)

GAS MAIN ENCROACHMENT ON AND/OR PARALLEL TO EXCAVATION OF UNSHEETED TRENCH

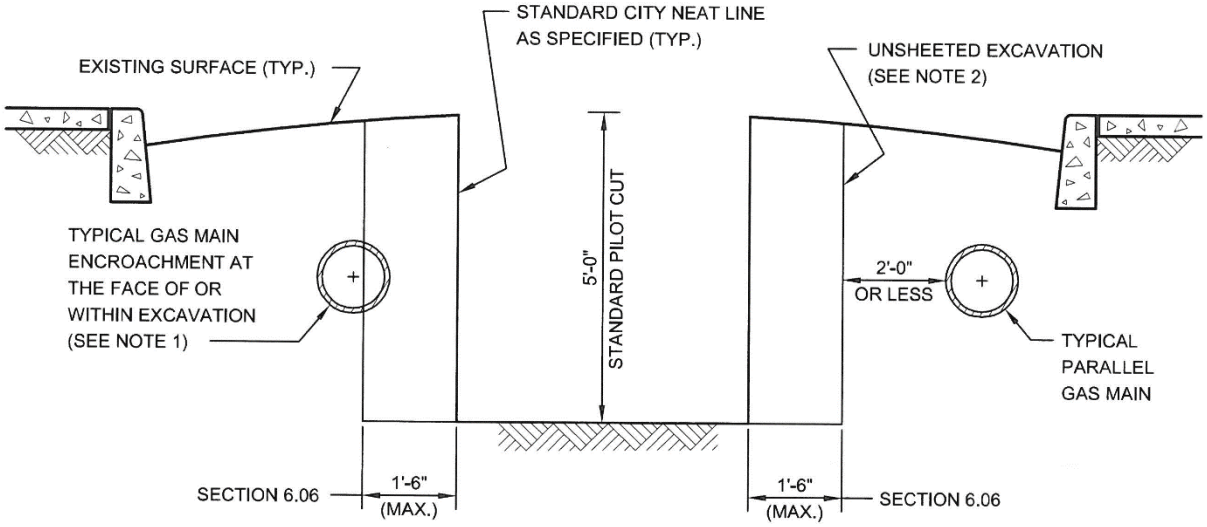

NOTES:

(1) GAS MAIN LOCATED AS SHOWN MAY HAVE TO BE REMOVED BY THE FACILITY OPERATOR PRIOR TO THE START OF CITY EXCAVATION, OTHERWISE, THE CONTRACTOR WILL BE PAID UNDER SECTION 6.06 FOR THE SAID WORK. IF GAS MAIN IS ABANDONED THEN SECTION 6.03 SHALL APPLY.

(2) EIGHTEEN (18) INCHES FROM STANDARD NEAT LINE IS THE MAXIMUM ALLOWABLE WIDTH OF AREA THAT MAY BE DISTURBED OR EXCAVATED DURING INSTALLATION OF CERTAIN TYPES OF SHEETING SYSTEMS THAT MEET THE REQUIREMENTS OF THE STANDARD SPECIFICATIONS OF THE DEPARTMENT OF DESIGN AND CONSTRUCTION OF THE CITY OF NEW YORK.

REVISED OCT. 2004 - L. ADRIEN
REVISED OCT. 1998 - J. WONG/W. PATALANO/P. MOY

V - PRELIMINARY GAS WORK TO BE PERFORMED BY FACILITY OPERATOR.

APPLICABLE TO ALL GAS DRAWINGS:

- ALL RELOCATION WORK SHOWN IN THIS SECTION IS TO BE PERFORMED BY FACILITY OPERATOR.
- ALL SUPPORT AND PROTECTION WORK TO BE PERFORMED BY CITY CONTRACTOR
- IF ADDITIONAL INFORMATION IS NEEDED REGARDING THE FACILITY OPERATOR'S RELOCATION WORK, THE CONTRACTOR IS ADVISED TO CONTACT THE GAS COMPANY REPRESENTATIVE:

Neville Jacobs Jr.
NationalGrid Energy Delivery
287 Maspeth Avenue
Brooklyn, NY 11211

718-963-5612
Neville.Jacobs@nationalgrid.com

Dennis Brady
Consolidated Edison Company
4 Irving Pl., 12th Floor SEC
New York, NY 10003
917-608-3435
BradyD@coned.com

(NO TEXT IN THIS AREA, TURN PAGE)

QUEENS GAS FACILITY COST ALLOCATION AGREEMENT

PROJECT NO. QED1063AC (Rev-1)

CAPITAL GAS MAIN INSTALLATION

SHEET #	LOC.	ON STREET	FROM	TO	ITEM	SIZE	TYPE	LENGTH	REIMB LENGTH	REMARKS
4 & 6	A1-A2	S/S Sanford Avenue	W/O Delong St	W/O College Pt. Blvd.	83g	4"	PE	894'+/-	894'+/-	
4 & 6	A1-A6	S/S Sanford Avenue	W/O Delong St	W/O College Pt. Blvd.	67.2e					RET 31'+/- OF 4"PE
4 & 6	A1-A6	S/S Sanford Avenue	W/O Delong St	W/O College Pt. Blvd.	67.2b					RET 662'+/- OF 6"CI/ST/PE
4 & 6	A1-A6	S/S Sanford Avenue	W/O Delong St	W/O College Pt. Blvd.	67.2c					RET 86'+/- OF 8"PE
5	A1-A2	W/S College Pt. Blvd	N/O 41st Rd	S/O 41st Av	83i	4"	PE	111'+/-	111'+/-	
5	A1-B1	W/S College Pt. Blvd	N/O 41st Rd	S/O 41st Av	67.2c					RET 241'+/- OF 8"CI/PE
5	B2-B3	W/S College Pt. Blvd	N/O 41st Rd	S/O 41st Av	67.2a					RET 45'+/- OF 4"ST

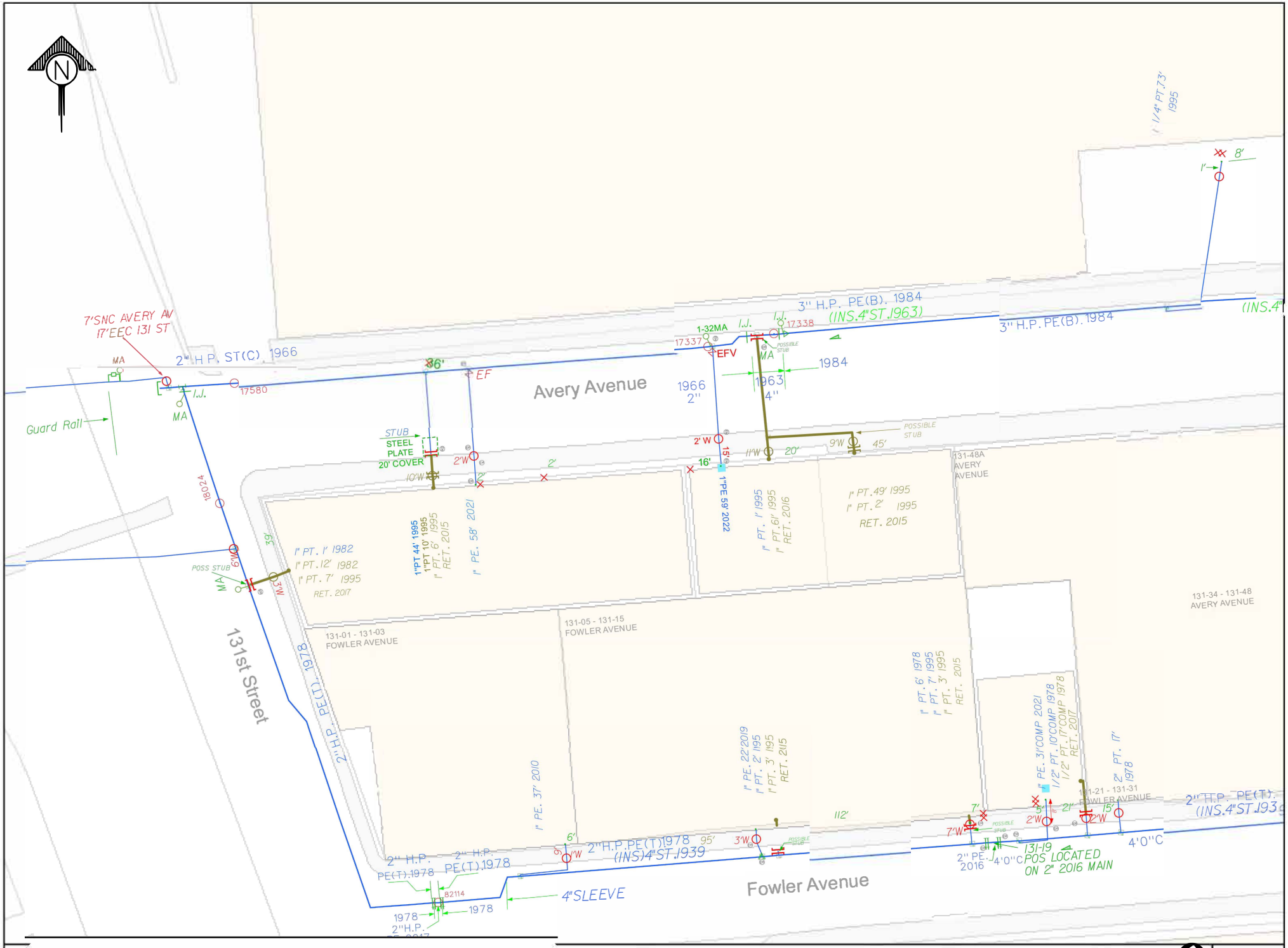

TO COLLEGE POINT BLVD (see sht 2)

QED1063AC-EP7_REV-1.Con Edison SCALE 1" = 60' LAST MODIFIED ON 6/18/2024 EP7-27A2 PLATE NO. 60-AT G.M. 57-AV

(see sht 1)

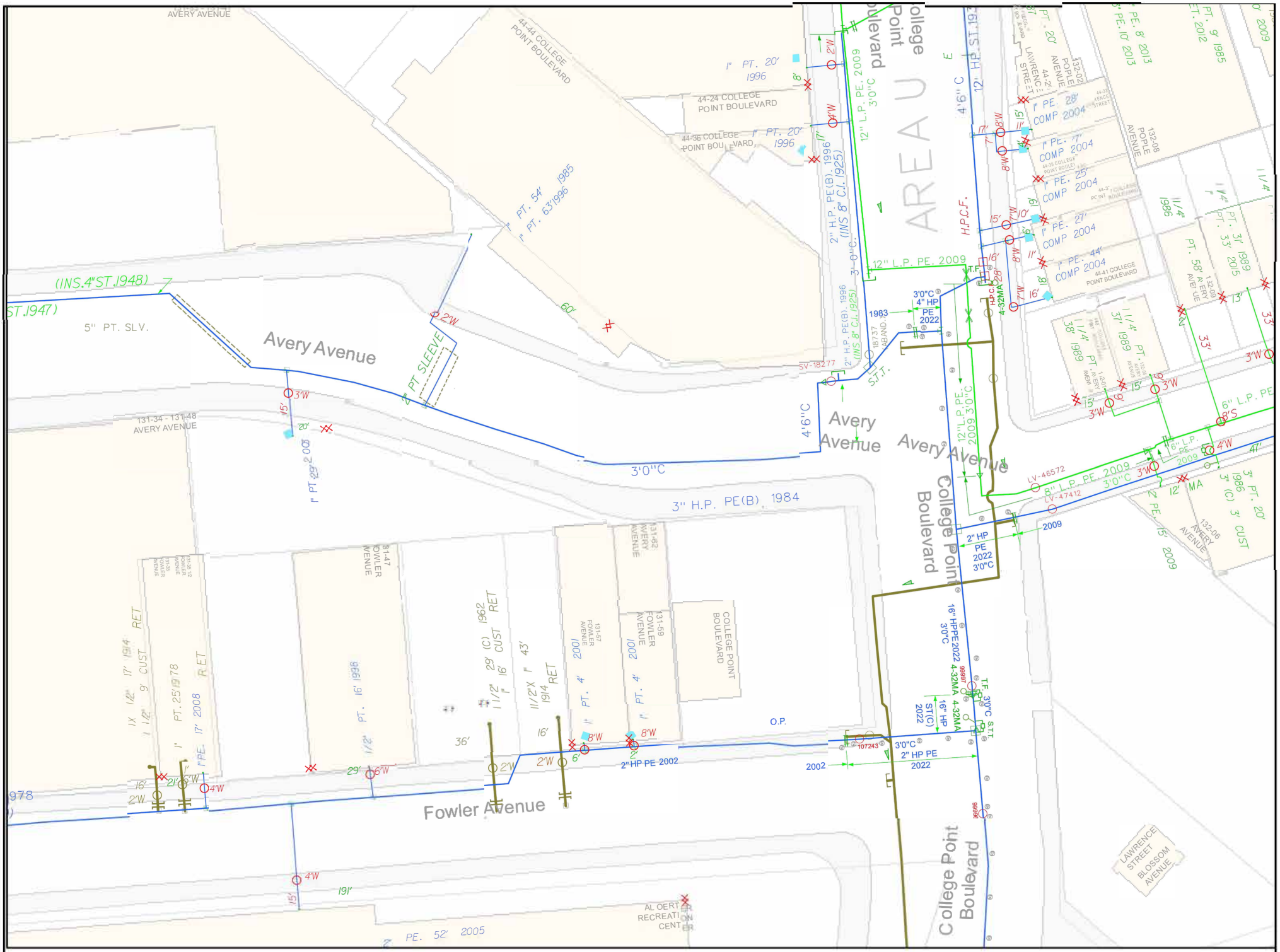
Avery Avenue
College Point Boulevard
Fowler Avenue
44-44 COLLEGE POINT BOULEVARD
44-24 COLLEGE POINT BOULEVARD
44-36 COLLEGE POINT BOULEVARD
131-34 - 131-48 AVERY AVENUE
132-02 POPLE AVENUE
132-08 POPLE AVENUE
132-06 AVERY AVENUE
131-47 FOWLER AVENUE
131-57 FOWLER AVENUE
131-59 FOWLER AVENUE
131-62 AVERY AVENUE
COLLEGE POINT BOULEVARD
LAWRENCE STREET
BLOSSOM AVENUE
AL OERTER RECREATION CENTER
AREA U
(INS.4"ST.1948)
5" PT. SLV.
2" PT SLEEVE
3" H.P. PE(B) 1984
12" L.P. PE. 2009
2" H.P. PE(B). 1996 (INS 8" C.I. 1925)
2" HP PE 2022
16" HPPE2022 4-32MA
16" HP ST(C) 2022
2" HP PE 2002
4'6"C
3'0"C
O.P.
H.P.C.F.
S.T.T.
T.F.
SV-18277
LV-46572
LV-47412
107243
36666
99997

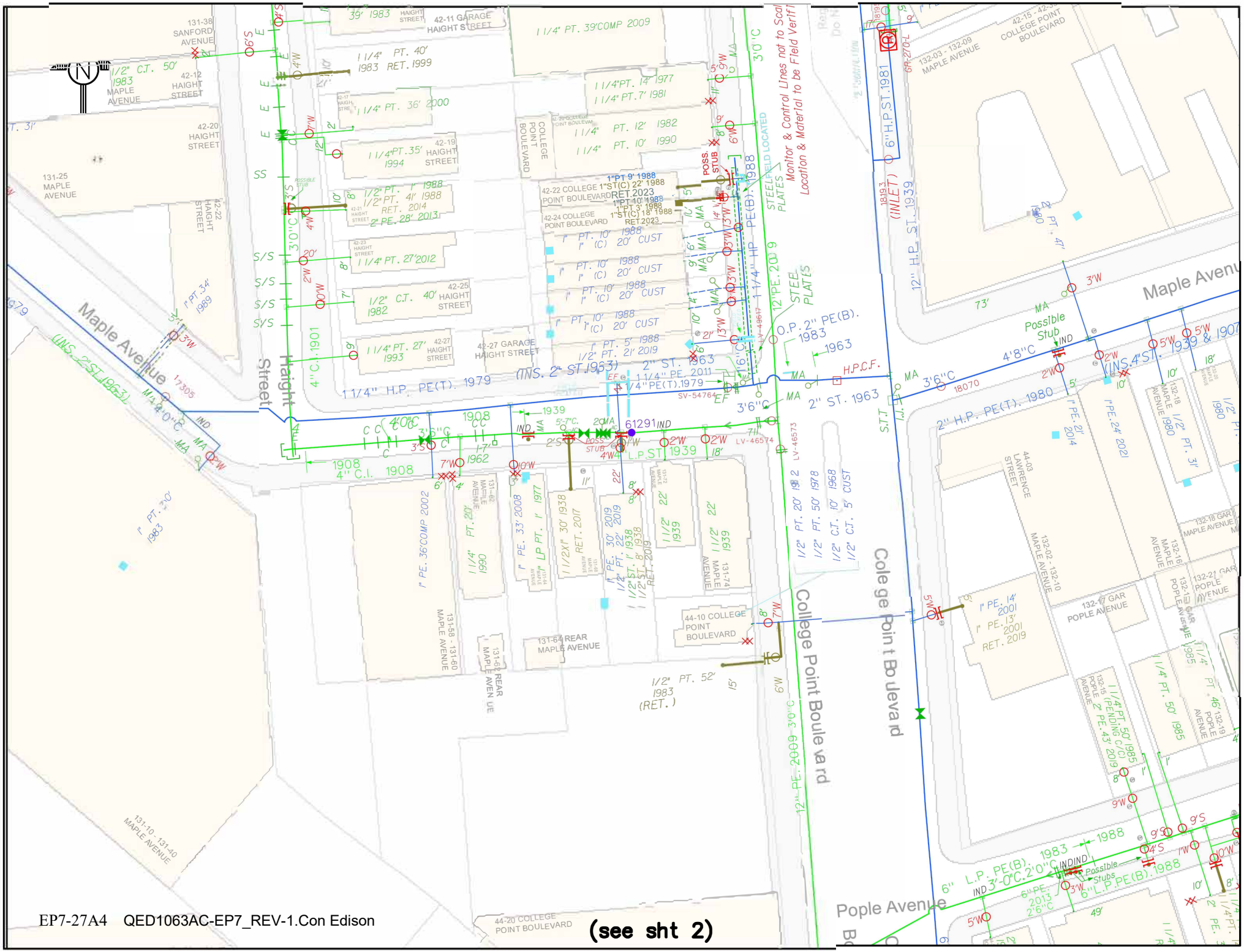
Maple Avenue
Haight Street
College Point Boulevard
Pople Avenue
Monitor & Control Lines not to Scale
Location & Material to be Field Verified
STEEL PLATES
POSS. STUB
Possible Stub
61291
L.P.ST
2" ST. 1963
(INS. 2" ST. 1963)
11/4" H.P. PE(T). 1979
2" H.P. PE(T). 1980
12" H.P. ST. 1939
6" H.P. ST. 1981
(INLET)
42-11 GARAGE HAIGHT STREET
42-27 GARAGE HAIGHT STREET
44-10 COLLEGE POINT BOULEVARD
44-20 COLLEGE POINT BOULEVARD
131-64 REAR MAPLE AVENUE
131-61 REAR MAPLE AVENUE
132-03 - 132-09 MAPLE AVENUE
132-17 GAR POPLE AVENUE
132-21 GAR POPLE AVENUE
44-03 LAWRENCE STREET
132-02 - 132-10 MAPLE AVENUE
131-10 - 131-40 MAPLE AVENUE
131-58 - 131-60 MAPLE AVENUE
131-25 MAPLE AVENUE
131-38 SANFORD AVENUE
42-12 HAIGHT STREET
42-20 HAIGHT STREET
42-22 HAIGHT STREET
42-25 HAIGHT STREET
42-27 HAIGHT STREET
42-22 COLLEGE POINT BOULEVARD
42-24 COLLEGE POINT BOULEVARD
42-15 - 42-23 COLLEGE POINT BOULEVARD
1908 4" C.I. 1908
1939
1962
1963
1980
1985
2019
2013
2014
2021
2001
2009
2011
2017
2012
2002
2008
1977
1978
1968
1988
1989
1983
1990
1994
1993
1982
1901
1305
1979
1981
1999
2000
1977
1988
2023
2019
2014
2013
2012
2009
2011
2017
2019
2021
2001
2019
2009

(see sht 5)

(see sht 6)

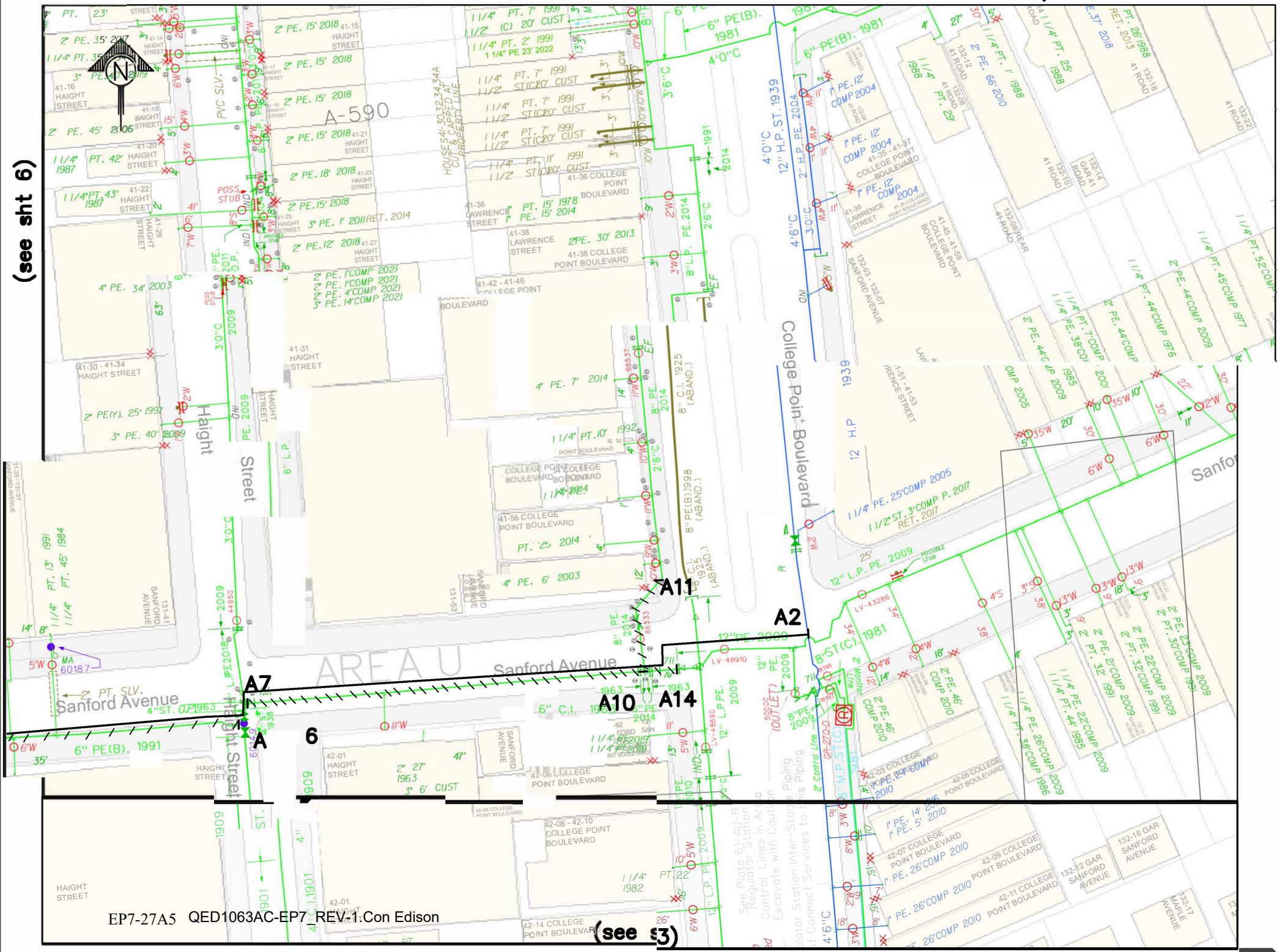

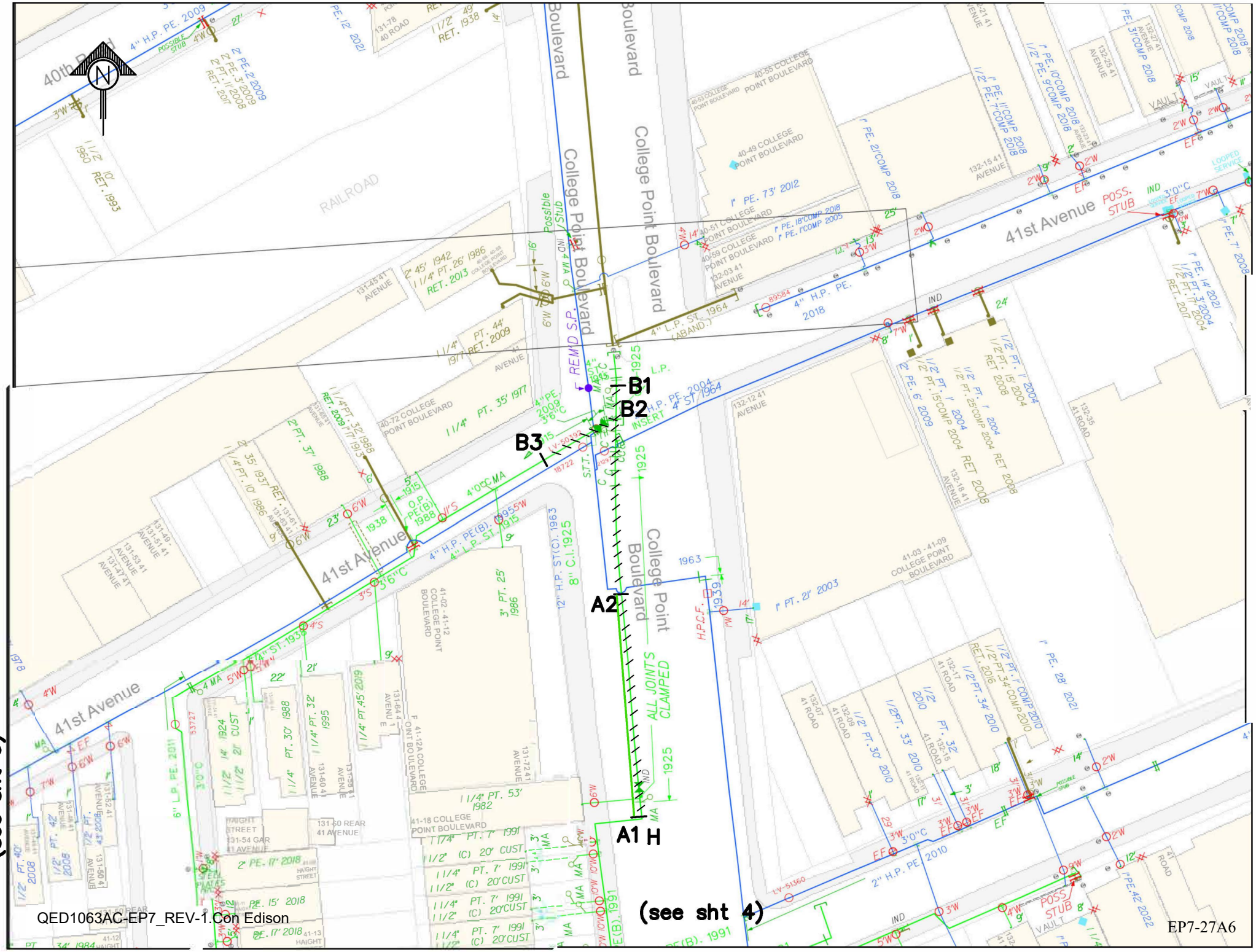
40th Road
College Point Boulevard
College Point Boulevard
College Point Boulevard
41st Avenue
41st Avenue
41st Avenue
RAILROAD
B1
B2
B3
A1
A2
H
ALL JOINTS CLAMPED
(see sht 6)
(see sht 4)
POSS. STUB
POSSIBLE STUB
LOOPED SERVICE
VAULT
IND
4" H.P. PE. 2009
4" H.P. PE. 2018
4" L.P. ST. 1964 (ABAND.)
4" H.P. PE. 2004
4" H.P. PE(B). 1955
4" L.P. ST. 1915
12" H.P. ST(C). 1963
8" C.I. 1925
2" H.P. PE. 2010
H.P.C.F.
REMD S.P.
Possible Stub
40-49 COLLEGE POINT BOULEVARD
40-55 COLLEGE POINT BOULEVARD
40-51 COLLEGE POINT BOULEVARD
40-59 COLLEGE POINT BOULEVARD
40-72 COLLEGE POINT BOULEVARD
41-02 - 41-12 COLLEGE POINT BOULEVARD
41-18 COLLEGE POINT BOULEVARD
41-03 - 41-09 COLLEGE POINT BOULEVARD
132-15 41 AVENUE
132-12 41 AVENUE
132-18 41 AVENUE
132-25 41 AVENUE
132-03 41 AVENUE
131-45 41 AVENUE
131-53 41 AVENUE
131-47 41 AVENUE
131-49 41 AVENUE
131-51 41 AVENUE
131-60 41 AVENUE
131-72 41 AVENUE
131-50 REAR 41 AVENUE
131-54 GAR 41 AVENUE
132-07 41 ROAD
132-09 41 ROAD
132-17 41 ROAD
132-35 41 ROAD
131-78 40 ROAD
HAIGHT STREET
STEEL PLATES

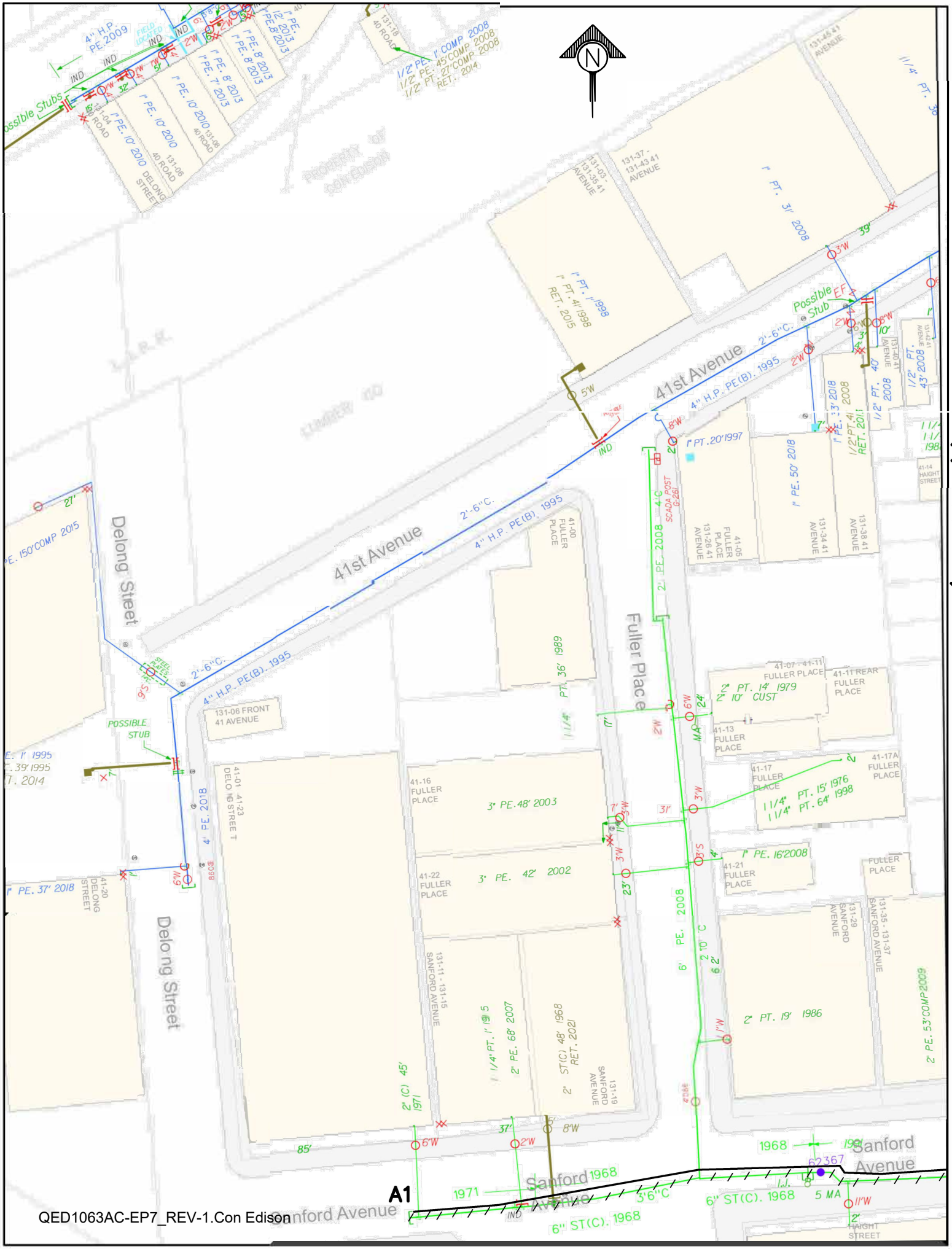

(see sht 4/5)

QED1063AC-EP7_REV-1.Con Edison

BRONX GAS FACILITY COST ALLOCATION
AGREEMENT QED1063AC

CAPITAL GAS MAIN INSTALLATION

SHEET #	LOC.	ON STREET	FROM	TO	ITEM	SIZE	TYPE	LENGTH	REIMB LENGTH	REMARKS
1		EDSON AVE	BUSSING AVE	PITMAN AVE	80i	6	LP	60	60	REPL. 6" CI
2		BUSSING AVE	GRACE AVE	EDSON AVE	80j	8	LP	53	53	REPL. 8" CI

BRONX QED1063AC-EP7_REV-1.Con Edison

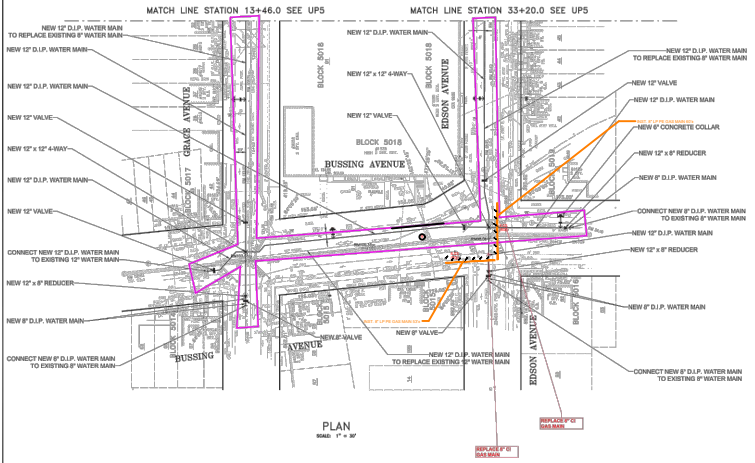
MATCH LINE STATION 13+46.0 SEE UP5
MATCH LINE STATION 33+20.0 SEE UP5
NEW 12" D.I.P. WATER MAIN TO REPLACE EXISTING 8" WATER MAIN
NEW 12" D.I.P. WATER MAIN
NEW 12" D.I.P. WATER MAIN
NEW 12" VALVE
NEW 12" x 12" 4-WAY
NEW 12" D.I.P. WATER MAIN
NEW 12" VALVE
CONNECT NEW 12" D.I.P. WATER MAIN TO EXISTING 12" WATER MAIN
NEW 12" x 8" REDUCER
NEW 8" D.I.P. WATER MAIN
CONNECT NEW 8" D.I.P. WATER MAIN TO EXISTING 8" WATER MAIN
NEW 12" D.I.P. WATER MAIN
NEW 12" x 12" 4-WAY
NEW 12" VALVE
BLOCK 5018
BLOCK 5017
BUSSING AVENUE
GRAVE AVENUE
EDSON AVENUE
NEW 12" D.I.P. WATER MAIN TO REPLACE EXISTING 8" WATER MAIN
NEW 12" VALVE
NEW 12" D.I.P. WATER MAIN
EXIST. 8" LP PE GAS MAIN 60%
NEW 6" CONCRETE COLLAR
NEW 12" x 6" REDUCER
NEW 8" D.I.P. WATER MAIN
CONNECT NEW 8" D.I.P. WATER MAIN TO EXISTING 8" WATER MAIN
NEW 12" D.I.P. WATER MAIN
NEW 12" x 8" REDUCER
NEW 8" D.I.P. WATER MAIN
CONNECT NEW 8" D.I.P. WATER MAIN TO EXISTING 8" WATER MAIN
NEW 8" VALVE
NEW 12" D.I.P. WATER MAIN TO REPLACE EXISTING 12" WATER MAIN
EXIST. 8" LP PE GAS MAIN 60%
REPLACE 8" CI GAS MAIN
REPLACE 8" CI GAS MAIN
BLOCK 5016
BLOCK 5015
BLOCK 5014
BLOCK 5013
BLOCK 5012
BLOCK 5011
BLOCK 5010
BLOCK 5009
BLOCK 5008
BLOCK 5007
BLOCK 5006
BLOCK 5005
BLOCK 5004
BLOCK 5003
BLOCK 5002
BLOCK 5001
BLOCK 5000
BLOCK 4999
BLOCK 4998
BLOCK 4997
BLOCK

nationalgrid

PROJECT QED1063AC

NOTE: GAS INSTALLATION AND RETIREMENT SUBJECT TO CHANGE BY FACILITY OPERATOR

SHEET	ITEM#	ON STREET	CROSS ST1	CROSS ST2	ACTIVITY	SIZE (IN)	PRESSURE	MATERIAL	LENGTH (FT)	REIM/NON-REIM
1	1	FARMERS BLVD	111th RD	Intersection	INST	12	LP	Plastic	38	REIM
1	2	FARMERS BLVD	111th RD	Intersection	RET	12	LP	Steel	20	REIM
1	25	FARMERS BLVD	112th Ave	Intersection	INST	12	LP	Steel	38	REIM
1	26	FARMERS BLVD	112th Ave	Intersection	RET	12	LP	Steel	30	REIM
2	4	ONDERDONK AVE	Woodbine St	Intersection	INST	8	LP	Plastic	75	REIM
2	5	ONDERDONK AVE	Woodbine St	Intersection	RET	6	LP	Steel	55	REIM
3	6	ONDERDONK AVE	Madison St	Intersection	INST	8	LP	Plastic	513	REIM
3	7	ONDERDONK AVE	Madison St	Intersection	RET	6	LP	Steel	155	REIM
3	8	ONDERDONK AVE	Madison St	Intersection	RET	6	LP	Cast Iron	50	REIM
3	9	ONDERDONK AVE	Madison St	Intersection	RET	8	LP	Plastic	135	REIM
4	10	MERRICK BLVD	Baisley Blvd	Intersection	INST	12	LP	Plastic	263	REIM
4	11	MERRICK BLVD	Baisley Blvd	Intersection	RET	12	LP	Steel	120	REIM
5	12	MERRICK BLVD	Sunbury Rd	Intersection	INST	12	LP	Plastic	575	REIM
5	13	MERRICK BLVD	Sunbury Rd	Intersection	RET	12	LP	Cast Iron	435	REIM
6	14	MERRICK BLVD	Ursina Rd	Intersection	INST	12	LP	Plastic	1200	REIM
6	15	MERRICK BLVD	Ursina Rd	Intersection	RET	12	LP	Cast Iron	500	REIM
6	21	MERRICK BLVD	Ursina Rd	Intersection	INST	8	LP	Plastic	850	REIM
7	16	125TH ST	176th St	Intersection	INST	8	LP	Plastic	344	REIM
7	17	125TH ST	176th St	Intersection	RET	6	LP	Steel	265	REIM
8	18	MERRICK BLVD	125th Ave	Intersection	INST	8	LP	Plastic	56	REIM
8	19	MERRICK BLVD	125th Ave	Intersection	RET	6	LP	Steel	40	REIM
8	20	MERRICK BLVD	125th Ave	Intersection	RET	8	LP	Plastic	30	REIM
8	22	MERRICK BLVD	125th Ave	Intersection	RET	6	LP	Steel	275	REIM
8	23	MERRICK BLVD	125th Ave	Intersection	RET	6	LP	Cast Iron	215	REIM
8	24	MERRICK BLVD	125th Ave	Intersection	RET	6	LP	Plastic	110	REIM

EP7-27A10

National Grid
Project No. QED1063AC
Sheet 1 of 8

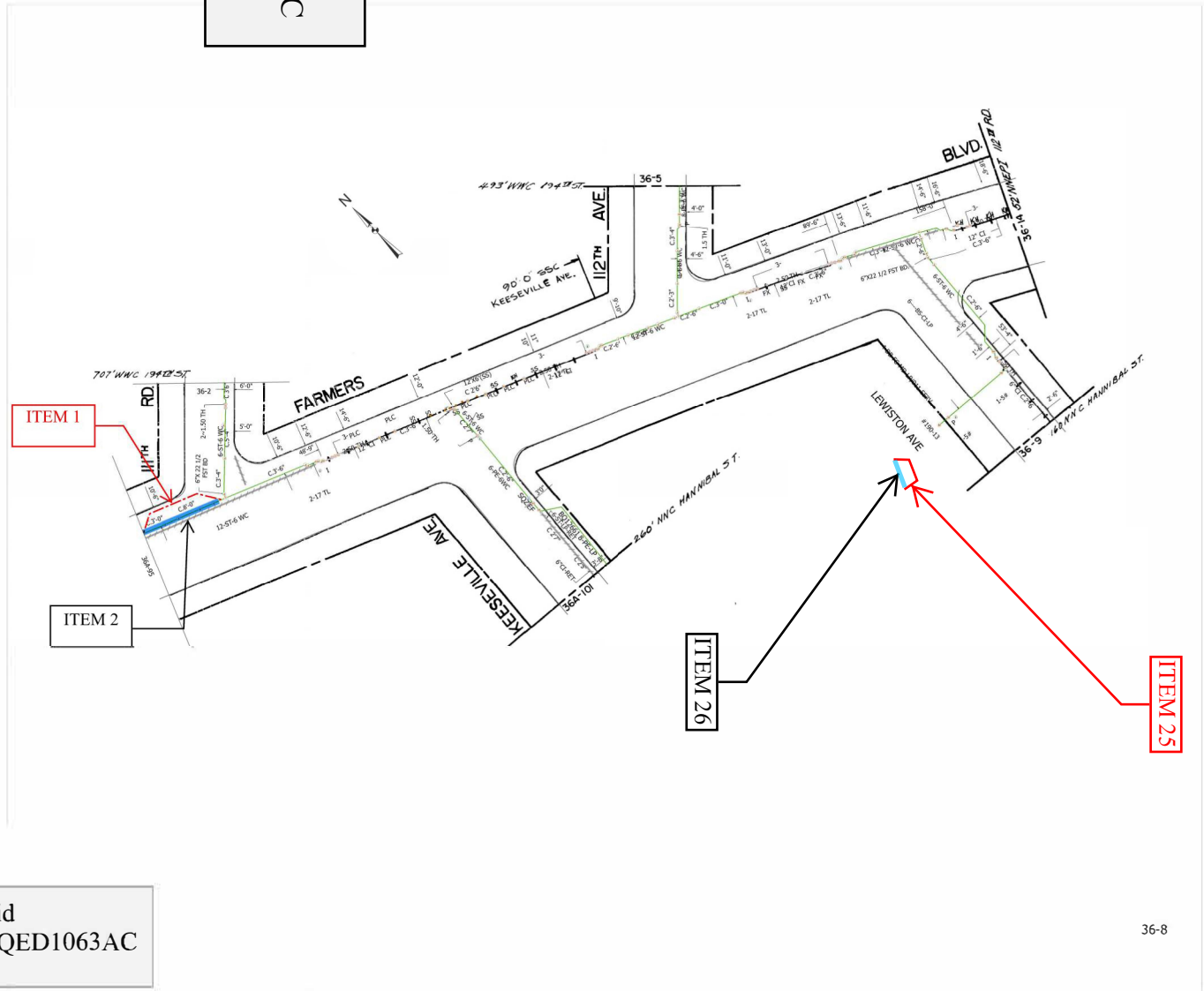

National Grid
Project No. QED1063AC
Sheet 1 of 1

Legend

Anode
In Service
Clamp
In Service
Connection Point
In Service
Coupling
In Service
End Cap
In Service
Elbow
In Service
Reducer
In Service
Saddle
In Service
Sleeve
In Service
Tee
In Service
Transition
In Service
Weld
In Service
Critical Valve
Normally Open
Normally Closed
Main Valve
Normally Open
Normally Closed
Service Valve
Normally Open
Normally Closed
Proposed/Abandoned Valve
Proposed
Abandoned
SOP
SOP Polygon
Service Pipe
Operating Pressure
<=2 - Low
>2 and <=18 - Intermediate
>18 and <= 60 - High
>60 and <=99 - High
>99 and <=124 - High
>125 and <=350 - High
>350 and <=450 - High
Other
Distribution Pipe
Operating Pressure
<=2 - Low
>2 and <=18 - Intermediate
>18 and <= 60 - High
>60 and <=99 - High
>99 and <=124 - High
>124 and <=350 - High
>350 and <=450 - High
Other
Transmission Pipe
Operating Pressure
<=2 - Low
>2 and <=18 - Intermediate
>18 and <=60 - High
>60 and <=99 - High
>99 and <=124 - High
>125 and <=350 - High
>350 and <=450 - High
Other
Pipeline Line (P)
Distribution Pipe (P)
Pipeline Line (A)
Service Pipe (A)
Distribution Pipe (A)

0 15 30 60 90 120 US Feet

1 inch equals 30 feet

NOTE: The location of surface and underground objects shown are not warranted tobe correct. Refer to the world map for the most current SOP status

ID-36-8

ID-36-8

nationalgrid

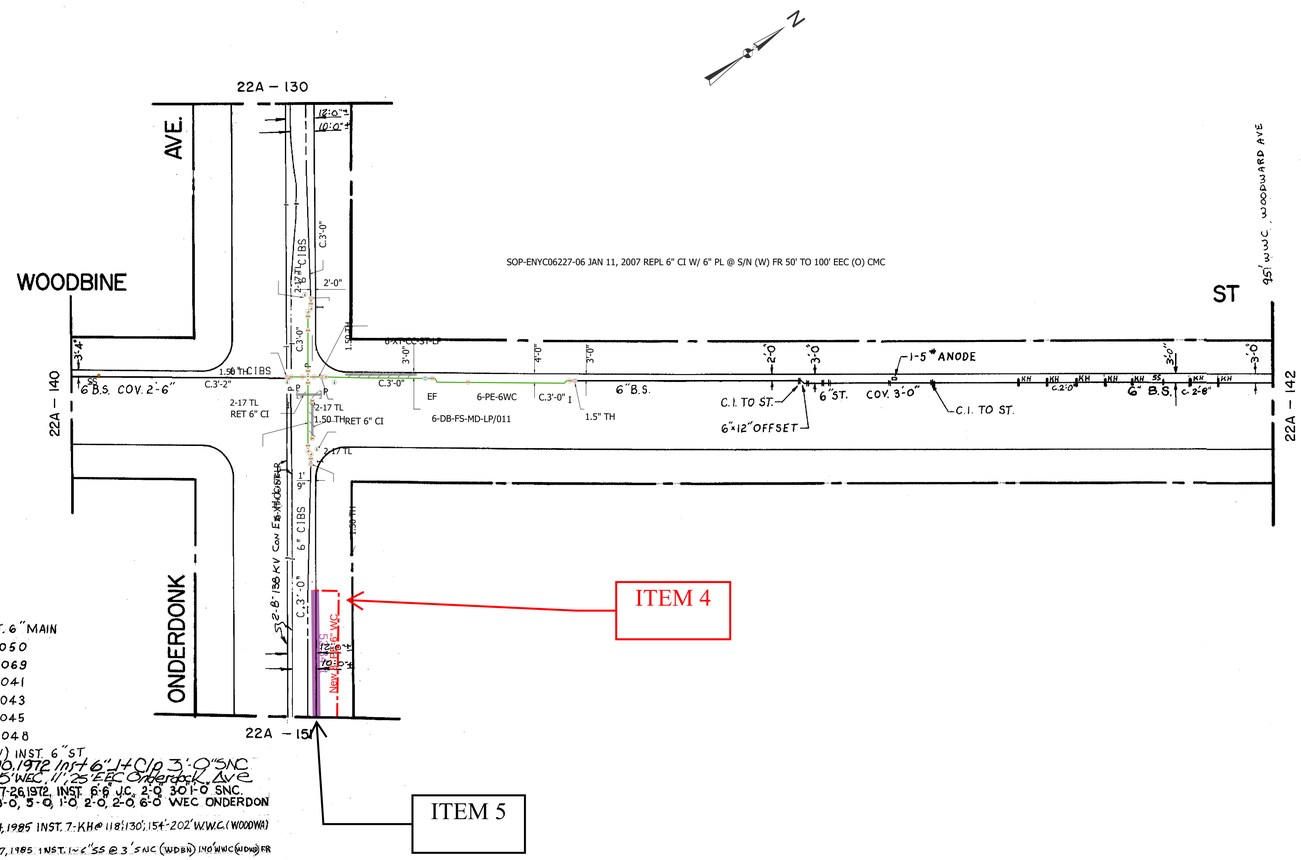

REFERENCES

I.C. 570
DEC. 8-9, 1913 (O) INST. 6" MAIN
SEPT. 2, 1943 W.O. 11050
SEPT. 8, 1943 W.O. 11069
SEPT. 15, 1943 W.O. 11041
SEPT. 16, 1943 W.O. 11043
SEPT. 17, 1943 W.O. 11045
SEPT. 21, 1943 W.O. 11048
OCT. 15-21, 1959 (W) INST. 6" ST.
W.O. 075901 JAN 3-10, 1972 INST 6" I+C/P 3'-0" SNC Woodbine St & 15' WEC, 11', 25' EEC Onderdonk Ave
W.O. 075961 JAN. 17-26, 1972, INST. 6-6 J.C. 2-0 30'-0 SNC. WOODBINE ST. & 3-0, 5-0, 1-0 2-0, 2-0, 6-0 WEC ONDERDONK AVE.
W.O. 85100110025 OCT. 24, 1985 INST. 7-KH @ 118', 130', 154'-202' W.W.C. (WOODWA) & 3' SNC. (WOODBINE) R.K.
W.O. 85100070121 OCT. 7, 1985 INST. 1-2" SS @ 3'.5 NC (WDBR) 1-10' WWC (WDWA) FR

OCT 4,1990 REPL 6" CI W/ 6" X-TRU-ST @ 3' WEC (O) FR 28' NNC TO 5'-6" SSC (W) AND AT 2' SNC (W) FR 10'-4" WEC TO 4' EEC (O) PROJ. # 07448 RU

W.O.9403090107 MARCH 9,1994 INST 1-6" SS @ 2'-6" SNC (O) & 56'-6" WWC (W) LJ
DEC.14,2004 REPL 6"CI W/6"MD PLDB ON N/S (WOODBINE ST) FR 4'-0" TO 50'-0" EEC (ONDERDONK AVE) / PROJ#FMD498

JAN 11, 2007 REPL 6" CI W/PLDB ON N/S (W) FR 49'-0" TO 107'-0" EEC (O)

REVISED 01-22-2007

22A-141

National Grid
Project No. QED1063AC
Sheet 2 of 8

0 15 30 60 90 120 US Feet

1 inch equals 30 feet

ID-22A-141

ID-22A-141

EP7-27A12

NOTE: The location of surface and underground objects shown are not warranted to be correct. Refer to the world map for the most current SOP status

Legend

Anode
- In Service

Clamp
- In Service

Connection Point
- In Service

Coupling
- In Service

End Cap
- In Service

Elbow
- In Service

Reducer
- In Service

Saddle
- In Service

Sleeve
- In Service

Tee
- In Service

Transition
- In Service

Weld
- In Service

Critical Valve
- Normally Open
- Normally Closed

Main Valve
- Normally Open
- Normally Closed

Service Valve
- Normally Open
- Normally Closed

Proposed/Abandoned Valve
- Proposed
- Abandoned

SOP
- SOP Polygon

Service Pipe
Operating Pressure
- <=2 - Low
- >2 and <=18 - Intermediate
- >18 and <= 60 - High
- >60 and <=99 - High
- >99 and <=124 - High
- >125 and <=350 - High
- >350 and <=450 - High
- >450
- Other

Distribution Pipe
Operating Pressure
- <=2 - Low
- >2 and <=18 - Intermediate
- >18 and <= 60 - High
- >60 and <=99 - High
- >99 and <=124 - High
- >124 and <=350 - High
- >350 and <=450 - High
- >450
- Other

Transmission Pipe
Operating Pressure
- <=2 - Low
- >2 and <=18 - Intermediate
- >18 and <=60 - High
- >60 and <=99 - High
- >99 and <=124 - High
- >125 and <=350 - High
- >350 and <=450 - High
- >450
- Other

Pipeline Line (P)
- Distribution Pipe (P)

Pipeline Line (A)
- Service Pipe (A)
- Distribution Pipe (A)

nationalgrid

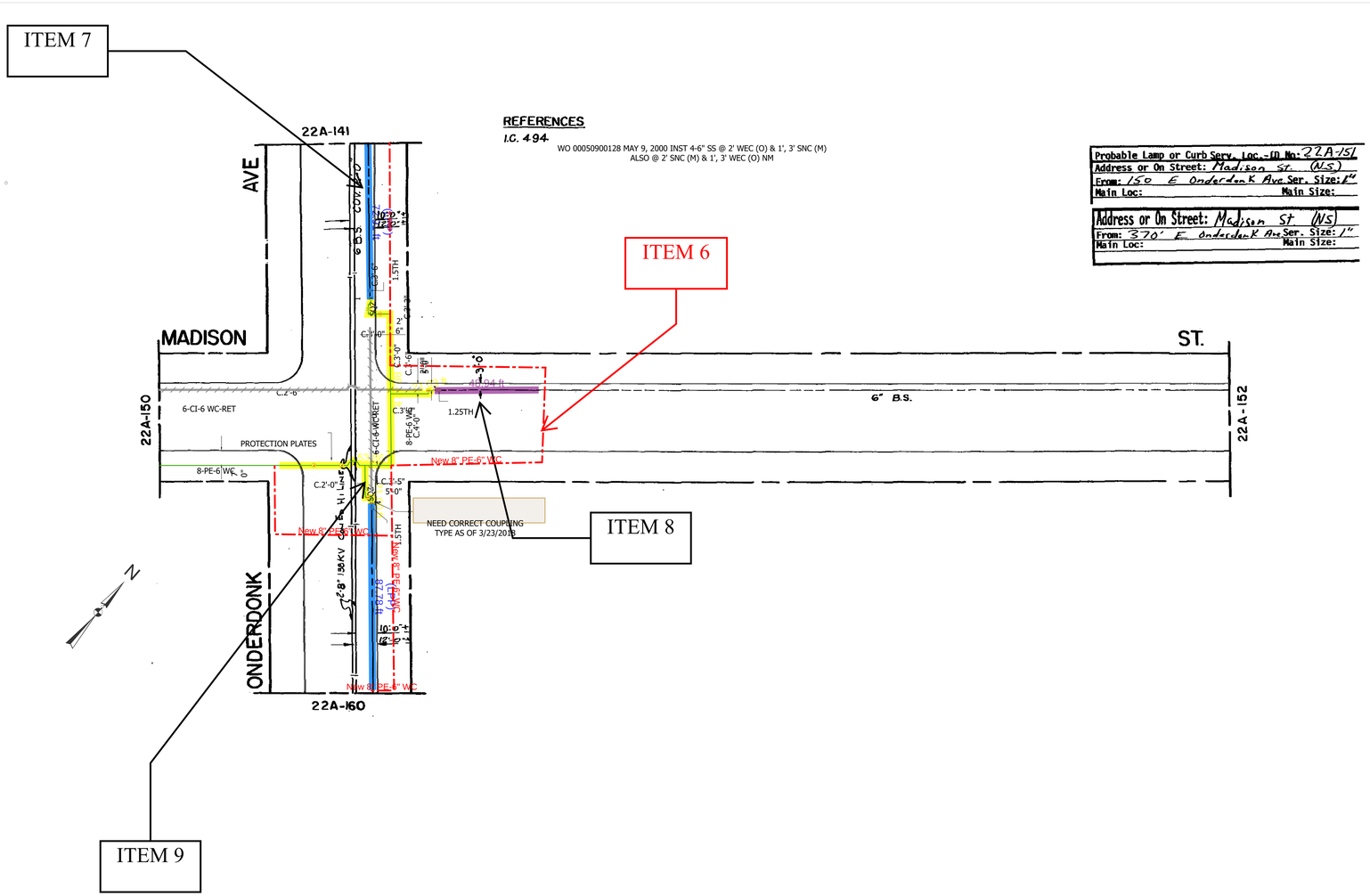

National Grid
Project No. QED1063AC
Sheet 3 of 8

22A-151

W.O.9002140113 FEB 14,1990 INST 4-6" SS @ 3' WEC (O) AT 50' NNC (M) RU

Legend

Anode
- In Service

Clamp
- In Service

Connection Point
- In Service

Coupling
- In Service

End Cap
- In Service

Elbow
- In Service

Reducer
- In Service

Saddle
- In Service

Sleeve
- In Service

Tee
- In Service

Transition
- In Service

Weld
- In Service

Critical Valve
- Normally Open
- Normally Closed

Main Valve
- Normally Open
- Normally Closed

Service Valve
- Normally Open
- Normally Closed

Proposed/Abandoned Valve
- Proposed
- Abandoned

SOP
- SOP Polygon

Service Pipe
Operating Pressure
- <=2 - Low
- >2 and <=18 - Intermediate
- >18 and <= 60 - High
- >60 and <=99 - High
- >99 and <=124 - High
- >125 and <=350 - High
- >350 and <=450 - High
- >450
- Other

Distribution Pipe
Operating Pressure
- <=2 - Low
- >2 and <=18 - Intermediate
- >18 and <= 60 - High
- >60 and <=99 - High
- >99 and <=124 - High
- >124 and <=350 - High
- >350 and <=450 - High
- >450
- Other

Transmission Pipe
Operating Pressure
- <=2 - Low
- >2 and <=18 - Intermediate
- >18 and <=60 - High
- >60 and <=99 - High
- >99 and <=124 - High
- >125 and <=350 - High
- >350 and <=450 - High
- >450
- Other

Pipeline Line (P)
- Distribution Pipe (P)

Pipeline Line (A)
- Service Pipe (A)
- Distribution Pipe (A)

0 15 30 60 90 120 US Feet

1 inch equals 30 feet

NOTE: The location of surface and underground objects shown are not warranted to be correct. Refer to the world map for the most current SOP status

ID-22A-151

ID-22A-151

EP7-27A13

nationalgrid

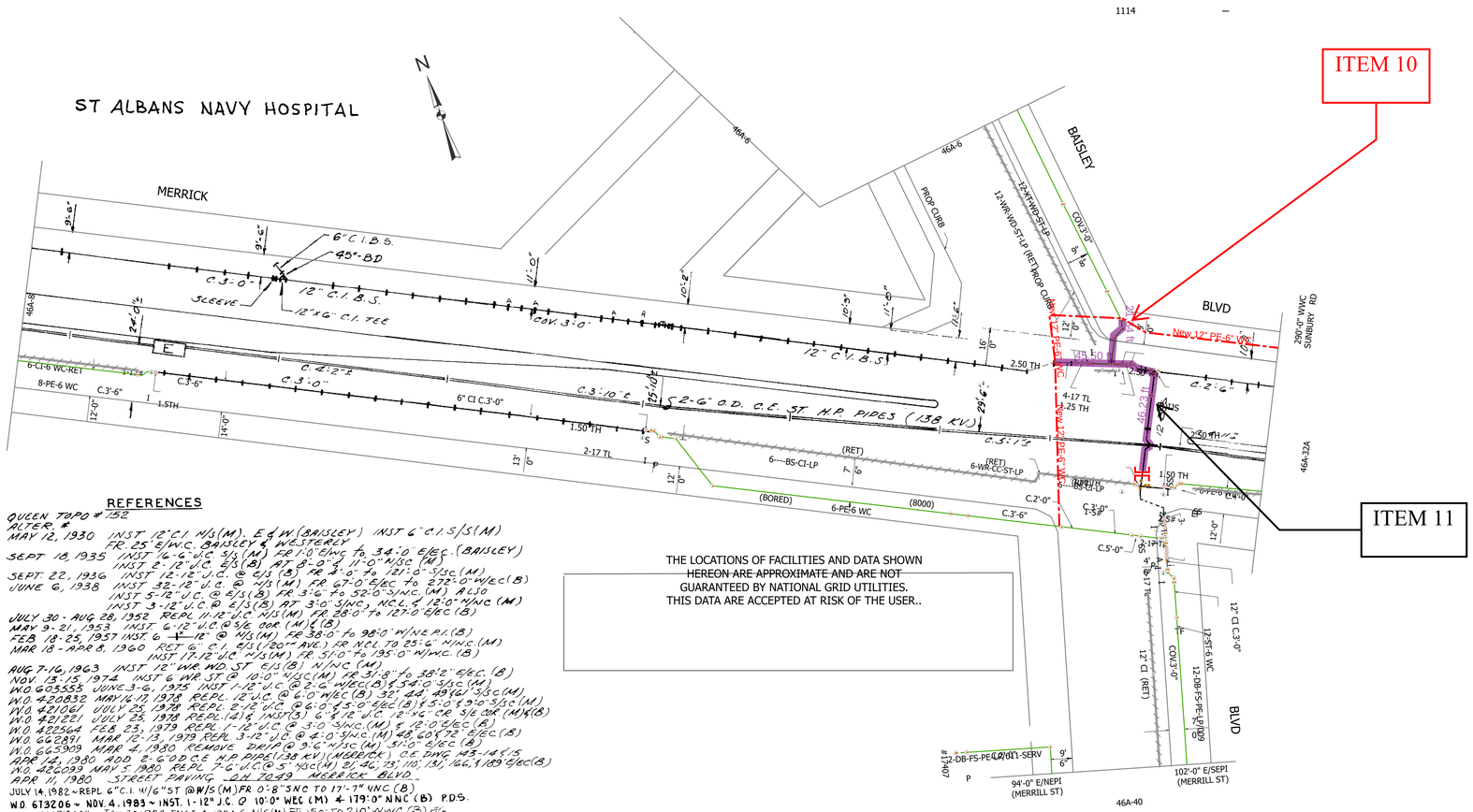

THE LOCATIONS OF FACILITIES AND DATA SHOWN HEREON ARE APPROXIMATE AND ARE NOT GUARANTEED BY NATIONAL GRID UTILITIES. THIS DATA ARE ACCEPTED AT RISK OF THE USER..

REFERENCES

QUEEN TOPO # 152
ALTER. #
MAY 12, 1930 INST 12"C.I. N/S(M). E & W(BAISLEY) INST 6"C.I. S/S(M) FR. 25' E/W.C. BAISLEY & WESTERLY
SEPT. 18, 1935 INST 16"G. U.C. S/S (M) FR. 1'0" E/WC to 34'0" E/EC. (BAISLEY)
INST 2-12" U.C. E/S (B) AT 8'-0" S 11'-0" N/SC (M)
SEPT. 22, 1936 INST 12-12" U.C. @ E/S (B) FR 4'0" to 121'0" S/SC. (M)
JUNE 6, 1938 INST 32-12" U.C. @ N/S (M) FR. 67'-0" E/EC to 272'-0" W/EC (B)
INST 5-12" U.C. @ E/S (B) FR. 3'-6" to 52'-0" S/NC. (M) ALLIS
INST 3-12" U.C. @ E/S (B) AT 3'-0" S/NC, NCL. & 12'-0" N/NC (M)
JULY 30 - AUG 28, 1952 REPL. 11-12" U.C. N/S (M) FR. 28'-0" to 127'-0" E/EC (B)
MAY 9-21, 1953 INST. 6-12" U.C. @ S/E COR (M) & (B)
FEB. 18-25, 1957 INST. 6 - 12" @ N/S (M) FR. 38'-0" to 98'-0" W/NE.P.L. (B)
MAR 18 - APR 8, 1960 RST 6 - C.I. E/S (200' AVE.) FR. N.C.L. TO 25'-6" N/NC. (M)
INST. 17-12" U.C. N/S (M) FR. 5'-0" to 195'-0" N/NC. (B)
AUG 7-16, 1963 INST. 12" WR. WD. ST. E/S (B) N/NC (M)
NOV. 13-15, 1974 INST 6 WR. ST @ 10'-0" N/SC (M) FR. 31'-8" to 38'-2" E/EC. (B)
W.O. 605555 JUNE 3-6, 1975 INST 1-12" U.C. @ 2'-6" W/EC (B) & 54'-0" S/SC (M)
W.O. 420832 MAY 16-17 1978 REPL. 12" U.C. @ 6'-0" W/EC (B) 327' 44', 49' 6" S/SC (M)
W.O. 421061 JULY 25, 1978 REPL. 2-12" S/C @ 6'-0" & 5'-0" E/EC (B) & 5'-0" & 9'-0" S/SC (M)
W.O. 421221 JULY 25, 1978 REPL. (4) & INST (3) 6" & 12" U.C. 12"x6" CR. S/E COR (M) & (B)
W.O. 422564 FEB 23, 1979 REPL. 1-12" U.C. @ 3'-0" S/NC. (M) & 12'-0" E/EC (B)
W.O. 662891 MAR 12-13, 1979 REPL. 3-12" U.C. @ 4'-0" S/NC. (M) 48', 60', 72' E/EC (B)
W.O. 663909 MAR 4, 1980 REMOVE DRIP @ 9'-6" N/SC (M) 5'-0" E/EC (B)
APR 14, 1980 ADD 2-6" O.D. C.E. H.P. PIPE (138 KV) (MERRICK) C.E. DWG 143-14 & 15
W.O. 422093 MAY 5, 1980 REPL. 7-6" U.C. @ 5' N/SC (M) 21, 46, 73, 110, 131, 166, & 189' E/EC (B)
APR 11, 1980 STREET PAVING DH 7049 MERRICK BLVD.
JULY 14, 1982 ~ REPL 6" C.I. W/6" ST @ W/S (M) FR. 0'-8" S/NC TO 17'-7" W/NC (B)
W.O. 613206 ~ NOV. 4, 1983 ~ INST. 1-12" J.C. @ 10'-0" WEC (M) & 179'-0" N/NC (B) P.D.S.
W.O. 8401310044 JAN. 30, 1984 INST. 4-12" A.S. N/S (M) FR. 15'-0" TO 210' W/NC (B) PG.
W.O. 8510280243 - OCT. 28 - NOV. 4, 1985 - INST. 4-12" KH @ 10'-0" S/NC (M) & 8'-0" W.E.C. (B) L.D.
WO 8512260166 DEC 26-JAN 3, 1986 INST 1-12" KH AT 5'-0" E/S (B) 2'-0" N/NC (M) - LD

W.O.9107180125 JULY 18-31,1991 INST 2-6" & 2-12" SS ON 6"X12" CROSS @ SE CORNER (MERRICK & BAISLEY) ALSO INST 6" SS @ 11'-0" NSC (M) & 20'-0" EEC (B) RR
MARCH 11-23 1993 REPL 6" CI & ST W/PLDB (8000) ON S/S (MERRICK BLVD) FR 5'-0" ESEPI TO 175'-0" WSWPI (BAISLEY BLVD) PROJ# 09666 FB..
W.O.9208070135 AUG 7-11, 1992 INST 6" SS @ 11' NSC (M) & 6' WEC (B) CMG
W.O.9207290103 JULY 28-AUG 11, 1992 INST 12" SS @ 5' EEC (B) & 18' SSC (M) CMG
WO 9605300131 MAY 30,1996 INST 4-12" PERMABONDS @ N/E CORNER (M) AND (B) RU
JUNE 10-OCT.4,1996 REPL 12" CI & 12" ST W/12" PLDB ON (BAISLEY BLVD) FR A PT. 5' EWC (BAISLEY) & 9' N/NWPI (172 ST) TO A PT. 4' EEC (BAISLEY) & 30" S/SEPI (MERRICK BLVD)-PROJ#12285/LN
JUNE 19,1996-JAN.16,1997 REPL 12" & 12" ST W/12" X-TRU ST & 12" PLDB ON (BAISLEY) FR (MERRICK BLVD) TO (MONTAUK ST)-PROJ#12285/LN
JUNE 26,1997 REPL 6" CI & ST W/6" PLDB ON S/S (M) FR 8'-0" TO 59'-10" EEC (B) PROJ# 12285 LJ
FEB.4,1998 CURBS INSTALLED ON BAISLEY BLVD (FR 172ND ST TO MOUNTAUK ST) AS PER O.H.# HWQ994
DEC 29-30, 1998 INST 2" PLDB SERV @ #17407 BAISLEY BLVD & 29' NNC (MERRIL ST) RM
WO# T100553046 SEPT 23, 2006 INST 1-12" ADAMS SLEEVE @ 7'-0" EEC (B) & 25'-0" SSC (M) AP

National Grid
Project No. QED1063AC
Sheet 4 of 8

0 15 30 60 90 120 US Feet

1 inch equals 30 feet

NOTE: The location of surface and underground objects shown are not warranted to be correct. Refer to the world map for the most current SOP status

ID-46A-32

ID-46A-32

EP7-27A14

Legend

Anode
- In Service

Clamp
- In Service

Connection Point
- In Service

Coupling
- In Service

End Cap
- In Service

Elbow
- In Service

Reducer
- In Service

Saddle
- In Service

Sleeve
- In Service

Tee
- In Service

Transition
- In Service

Weld
- In Service

Critical Valve
- Normally Open
- Normally Closed

Main Valve
- Normally Open
- Normally Closed

Service Valve
- Normally Open
- Normally Closed

Proposed/Abandoned Valve
- Proposed
- Abandoned

SOP
- SOP Polygon

Service Pipe
Operating Pressure
- <=2 - Low
- >2 and <=18 - Intermediate
- >18 and <= 60 - High
- >60 and <=99 - High
- >99 and <=124 - High
- >125 and <=350 - High
- >350 and <=450 - High
- >450
- Other

Distribution Pipe
Operating Pressure
- <=2 - Low
- >2 and <=18 - Intermediate
- >18 and <= 60 - High
- >60 and <=99 - High
- >99 and <=124 - High
- >124 and <=350 - High
- >350 and <=450 - High
- >450
- Other

Transmission Pipe
Operating Pressure
- <=2 - Low
- >2 and <=18 - Intermediate
- >18 and <=60 - High
- >60 and <=99 - High
- >99 and <=124 - High
- >125 and <=350 - High
- >350 and <=450 - High
- >450
- Other

Pipeline Line (P)
- Distribution Pipe (P)

Pipeline Line (A)
- Service Pipe (A)
- Distribution Pipe (A)

nationalgrid

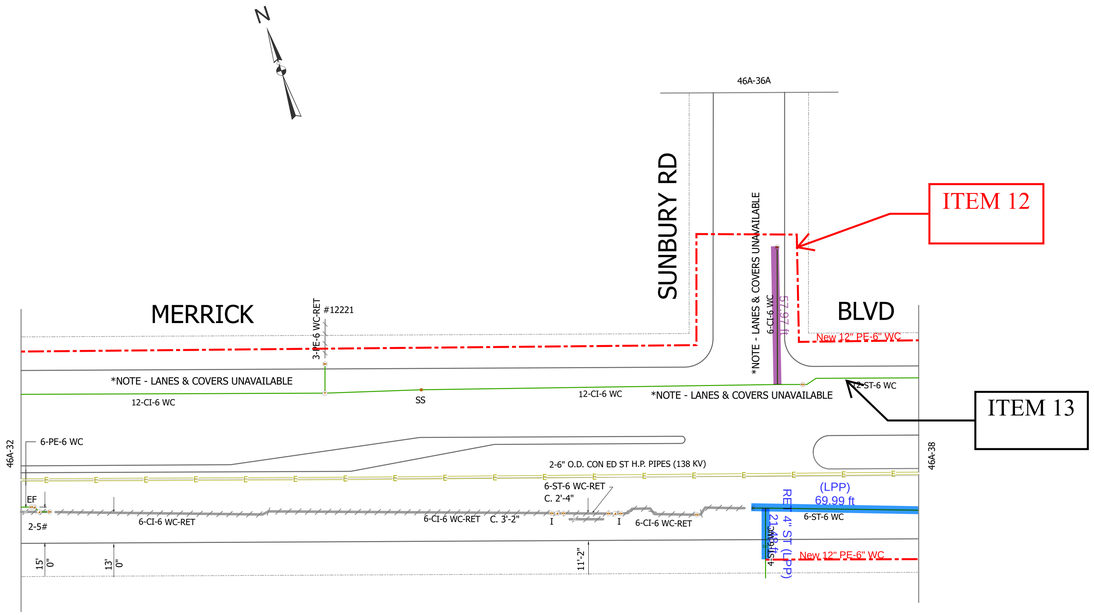

W.O.92111990099 NOV 19,1992 INST 1-12" SS @ 9'-0" SNC (M) & 245'-0" EEC (BAISLEY BLVD) LJ

JUNE 23 - JULY 20, 1993 REPL 6" CI W/ 6" X-TRU ST ON S/S (M)
FROM 270'6" TO 299'6" E/SEPI (BAISLEY BLVD) PROJ 11082 DD

JUNE 26,1997 REPL 6" CI & ST W/6" PLDB ON S/S (M) & FR 8'-0" TO 59'-10" EEC (BAISLEY BLVD)
PROJ# 12285 LJ

APR 28, 2012 RET 6" CI & ST ON S/S (M) FR 58' ESEC (BAISLEY BLVD) TO 13' WE(EXT)C (S) PJ#D69515 RM

OCT 30, 2013 RET 3" PE SERV TO #12221 (M) @ 204' EEC (BAISLEY BLVD) RM

National Grid
Project No. QED1063AC
Sheet 5 of 8

46A-32A

Legend

Anode
- In Service

Clamp
- In Service

Connection Point
- In Service

Coupling
- In Service

End Cap
- In Service

Elbow
- In Service

Reducer
- In Service

Saddle
- In Service

Sleeve
- In Service

Tee
- In Service

Transition
- In Service

Weld
- In Service

Critical Valve
- Normally Open
- Normally Closed

Main Valve
- Normally Open
- Normally Closed

Service Valve
- Normally Open
- Normally Closed

Proposed/Abandoned Valve
- Proposed
- Abandoned

SOP
- SOP Polygon

Service Pipe

Operating Pressure
- <=2 - Low
- >2 and <=18 - Intermediate
- >18 and <= 60 - High
- >60 and <=99 - High
- >99 and <=124 - High
- >125 and <=350 - High
- >350 and <=450 - High
- >450
- Other

Distribution Pipe

Operating Pressure
- <=2 - Low
- >2 and <=18 - Intermediate
- >18 and <= 60 - High
- >60 and <=99 - High
- >99 and <=124 - High
- >124 and <=350 - High
- >350 and <=450 - High
- >450
- Other

Transmission Pipe

Operating Pressure
- <=2 - Low
- >2 and <=18 - Intermediate
- >18 and <=60 - High
- >60 and <=99 - High
- >99 and <=124 - High
- >125 and <=350 - High
- >350 and <=450 - High
- >450
- Other

Pipeline Line (P)
- Distribution Pipe (P)

Pipeline Line (A)
- Service Pipe (A)
- Distribution Pipe (A)

0 15 30 60 90 120 US Feet

1 inch equals 30 feet

NOTE: The location of surface and underground objects shown are not warranted to be correct. Refer to the world map for the most current SOP status

ID-46A-32A

ID-46A-32A

EP7-27A15

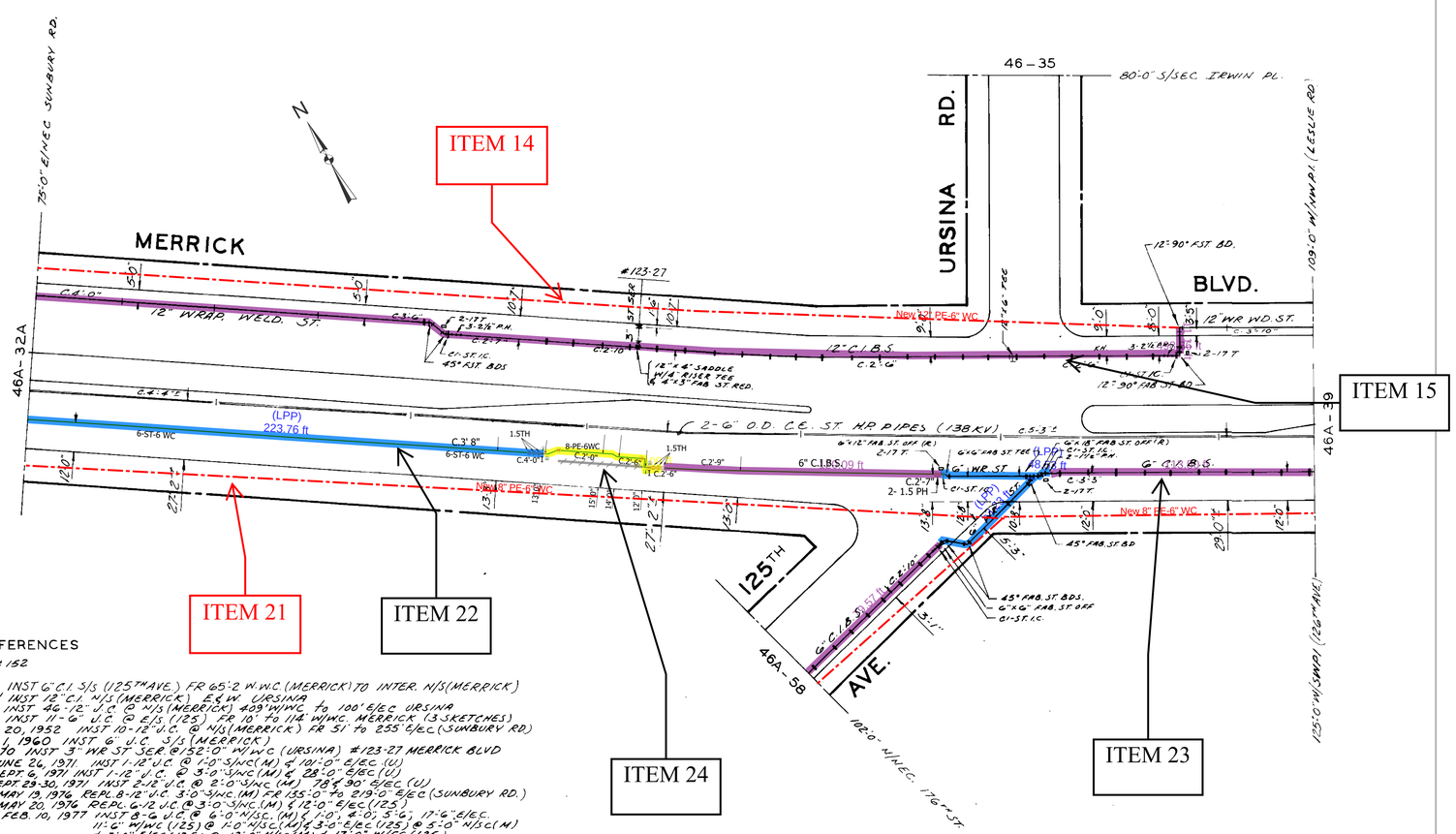

REFERENCES

QUEEN TOPO # 152
ALTER.
MAY 12, 1930. INST 6" C.I. S/S (125TH AVE.) FR 65'-2 W.W.C. (MERRICK) TO INTER. N/S (MERRICK) & INST 12" C.I. N/S (MERRICK) E & W. URSINA
MAY 23, 1938 INST 46'-12" U.C. @ N/S (MERRICK) 409' W/WC. to 100' E/EC. URSINA
MAR. 6, 1940 INST 11'-6" U.C. @ E/S (125) FR 10' to 114' W/WC. MERRICK (3 SKETCHES)
JULY 30-AUG 20, 1952 INST 10-12" U.C. @ N/S (MERRICK) FR 51' to 255' E/EC (SUNBURY RD.)
MAR 24-APR 1, 1960 INST 6" U.C. S/S (MERRICK)
NOV. 17-24, 1970 INST 3" WR ST SER. @ 152'-0" W/WC (URSINA) #123-27 MERRICK BLVD
W.O. 656665 JUNE 26, 1971 INST 1-12" U.C. @ 1'-0" S/WC (M) & 101'-0" E/EC (U)
W.O. 604208 SEPT 6, 1971 INST 1-12" U.C. @ 3'-0" S/WC (M) & 28'-0" E/EC (U)
W.O. 605530 SEPT 29-30, 1971 INST 2-12" U.C. @ 2'-0" S/WC (M) 78' & 90' E/EC (U)
W.O. 720604 MAY 13, 1976 REPL. 8-12" U.C. 3'-0" S/WC. (M) FR 155'-0" to 219'-0" E/EC (SUNBURY RD.)
W.O. 605529 MAY 20, 1976 REPL. 6-12 U.C. @ 3'-0" S/WC. (M) & 12'-0" E/EC (125)
W.O. 606932 FEB. 10, 1977 INST 8-6" U.C. @ 6'-0" N/S.C. (M) & 1'-0", 4'-0", 5'-6", 17'-6" E/EC. 11'-6" W/WC (125) @ 1'-0" N/S.C. (M) & 3'-0" E/EC (125) @ 5'-0" N/S.C. (M) & 3'-0" E/EC (125) @ 12'-0" N/S.C. (M) & 17'-0" W/EC (125)
W.O. 607011 FEB. 17, 1977 INST 2-6" U.C. @ 12'-0" N/S.C. (M) & 14'-0" W/EC. (125) @ 6'-0" N/S.C. (M) & 12'-0" E/EC (125)
W.O. 607727 JUNE 7, 1977 REPL. 3-12" U.C. @ 5'-0" S/WC. (M) & 231', 243' & 267'-0" E/EC. (SUNBURY RD)
DEC. 1977 PROP. PAVING CONTRACT (MERRICK BLVD) O.H. #7049
W.O. 625858 FEB 28, 1980 INST 1-12" K.K. CLAMP @ N/S (MERRICK) & 17'-0" E/EC (U)
W.O. 729090 FEB 25-29, 1980 REPL. 4-12" U.C. @ N/S (M) 29', 41', 53' & 65' E/EC (U)
APR 15, 1980 ADD. 2-6" O.D. C.E. H.P. PIPES (138 KV) (M) C.E. DWG. 143-4 & 15
W.O. 426043 APR 28, 1980 REPL. 8-6" U.C. @ 5' N/S.C. (M) 80, 91, 103, 114, 125, 137, 149' & 161' W/WC (126)
W.O. 426045 APR. 29, 1980 REPL. 6-6" U.C. @ 5'-0" N/S.C. (M) 173, 185, 197, 209, 222' & 234' W/WC (126)
W.O. 426085 MAY 1, 1980 REPL. 2-6" U.C. @ 3'-0" N/S.C. (M) 5'-0" E/EC & 59' W/WC (URSINA)
W.O. 426088 MAY 2, 1980 REPL. 5-12" U.C. @ 5'-0" S/WC. (M) 94', 102', 118', 166', 333' W/WC (URSINA)
W.O. 426111 - MAY 7, 1980 REPL. 3-6" U.C. @ S/S (M) 42', 55', 79', 92' & 106' W/WC (125)
W.O. 426113 MAY 8, 1980 REPL. 3-6" U.C. @ S/S (M) 34', 116' & 129' W/WC. (125)
APR 3-18, 1980 REPL. 6" C.I. W/6" WR ST @ S/S (M) FR 27'-3" W/EC. to 16'-1" E/EC (125) @ E/S (125) FR 4'-8" N/S.C. to 33'-0" S/S.C. (M) REC 6/080/0 J.E.
MAY 8-16, 1980 REPL. 6" C.I. W/6" WR ST @ S/S (M) FR 5'-7" W/WC. to 283'-6" E/EC (SUNBURY) REC 6/077/0 J.E.
JUNE 5-18, 1980 REPL. 12" C.I. W/12" WR WD ST @ N/S (M) FR 5'-0" W/EC to 233' E/EC (SUNBURY) REC 6/071/0 J.E.
MAY 6-23, 1980 REPL. 12" C.I. W/12" WR WD ST @ N/S (M) FR 41'-8" E/EC to 168'-3" W/WC (LESLIE) REC 6/070/0 J.E.

National Grid
Project No. QED1063AC
Sheet 6 of 8

46A-38

0 15 30 60 90 120 US Feet

1 inch equals 30 feet

NOTE: The location of surface and underground objects shown are not warranted to be correct. Refer to the world map for the most current SOP status

ID-46A-38

ID-46A-38

EP7-27A16

Legend

Anode
- In Service

Clamp
- In Service

Connection Point
- In Service

Coupling
- In Service

End Cap
- In Service

Elbow
- In Service

Reducer
- In Service

Saddle
- In Service

Sleeve
- In Service

Tee
- In Service

Transition
- In Service

Weld
- In Service

Critical Valve
- Normally Open
- Normally Closed

Main Valve
- Normally Open
- Normally Closed

Service Valve
- Normally Open
- Normally Closed

Proposed/Abandoned Valve
- Proposed
- Abandoned

SOP
- SOP Polygon

Service Pipe
Operating Pressure
- <=2 - Low
- >2 and <=18 - Intermediate
- >18 and <= 60 - High
- >60 and <=99 - High
- >99 and <=124 - High
- >125 and <=350 - High
- >350 and <=450 - High
- >450
- Other

Distribution Pipe
Operating Pressure
- <=2 - Low
- >2 and <=18 - Intermediate
- >18 and <= 60 - High
- >60 and <=99 - High
- >99 and <=124 - High
- >124 and <=350 - High
- >350 and <=450 - High
- >450
- Other

Transmission Pipe
Operating Pressure
- <=2 - Low
- >2 and <=18 - Intermediate
- >18 and <=60 - High
- >60 and <=99 - High
- >99 and <=124 - High
- >125 and <=350 - High
- >350 and <=450 - High
- >450
- Other

Pipeline Line (P)
- Distribution Pipe (P)

Pipeline Line (A)
- Service Pipe (A)
- Distribution Pipe (A)

nationalgrid

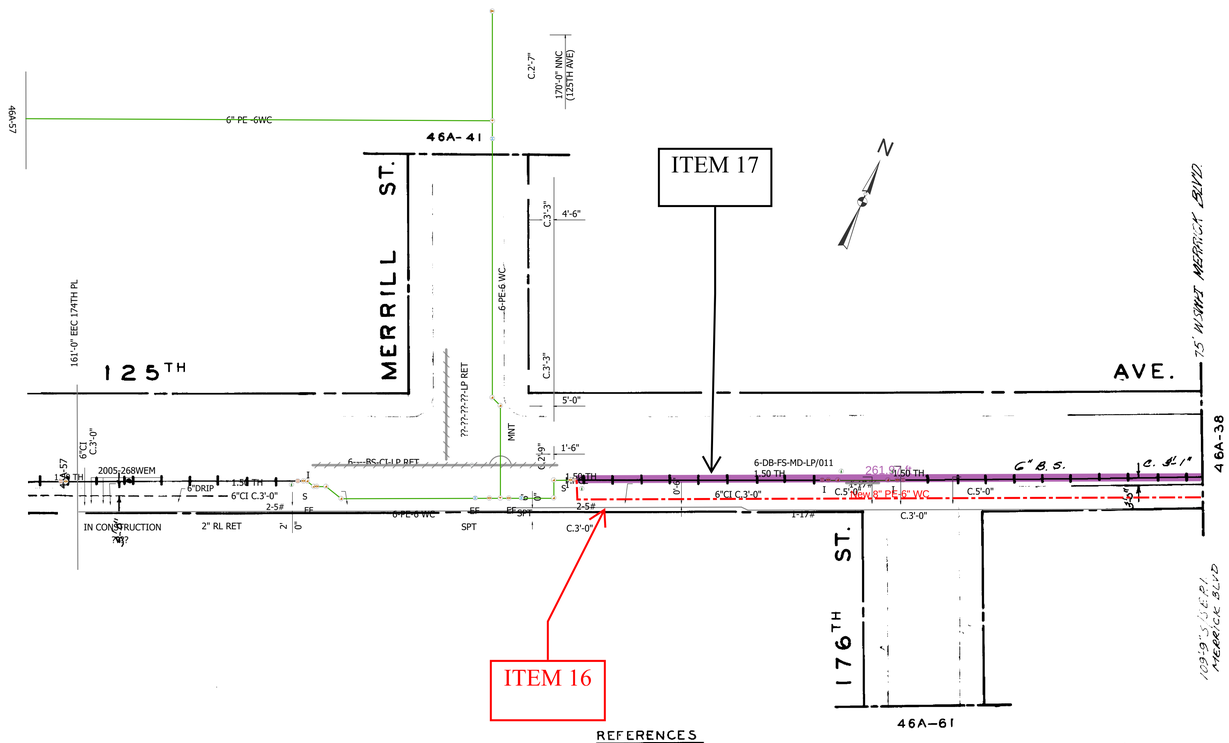

National Grid
Project No. QED1063AC
Sheet 7 of 8

0 15 30 60 90 120 US Feet

1 inch equals 30 feet

EP7-27A17

NOTE: The location of surface and underground objects shown are not warranted to be correct. Refer to the world map for the most current SOP status

ID-46A-58

ID-46A-58

Legend

Anode
- In Service

Clamp
- In Service

Connection Point
- In Service

Coupling
- In Service

End Cap
- In Service

Elbow
- In Service

Reducer
- In Service

Saddle
- In Service

Sleeve
- In Service

Tee
- In Service

Transition
- In Service

Weld
- In Service

Critical Valve
- Normally Open
- Normally Closed

Main Valve
- Normally Open
- Normally Closed

Service Valve
- Normally Open
- Normally Closed

Proposed/Abandoned Valve
- Proposed
- Abandoned

SOP
- SOP Polygon

Service Pipe
Operating Pressure
- <=2 - Low
- >2 and <=18 - Intermediate
- >18 and <= 60 - High
- >60 and <=99 - High
- >99 and <=124 - High
- >125 and <=350 - High
- >350 and <=450 - High
- >450
- Other

Distribution Pipe
Operating Pressure
- <=2 - Low
- >2 and <=18 - Intermediate
- >18 and <= 60 - High
- >60 and <=99 - High
- >99 and <=124 - High
- >124 and <=350 - High
- >350 and <=450 - High
- >450
- Other

Transmission Pipe
Operating Pressure
- <=2 - Low
- >2 and <=18 - Intermediate
- >18 and <=60 - High
- >60 and <=99 - High
- >99 and <=124 - High
- >125 and <=350 - High
- >350 and <=450 - High
- >450
- Other

Pipeline Line (P)
- Distribution Pipe (P)

Pipeline Line (A)
- Service Pipe (A)
- Distribution Pipe (A)

nationalgrid

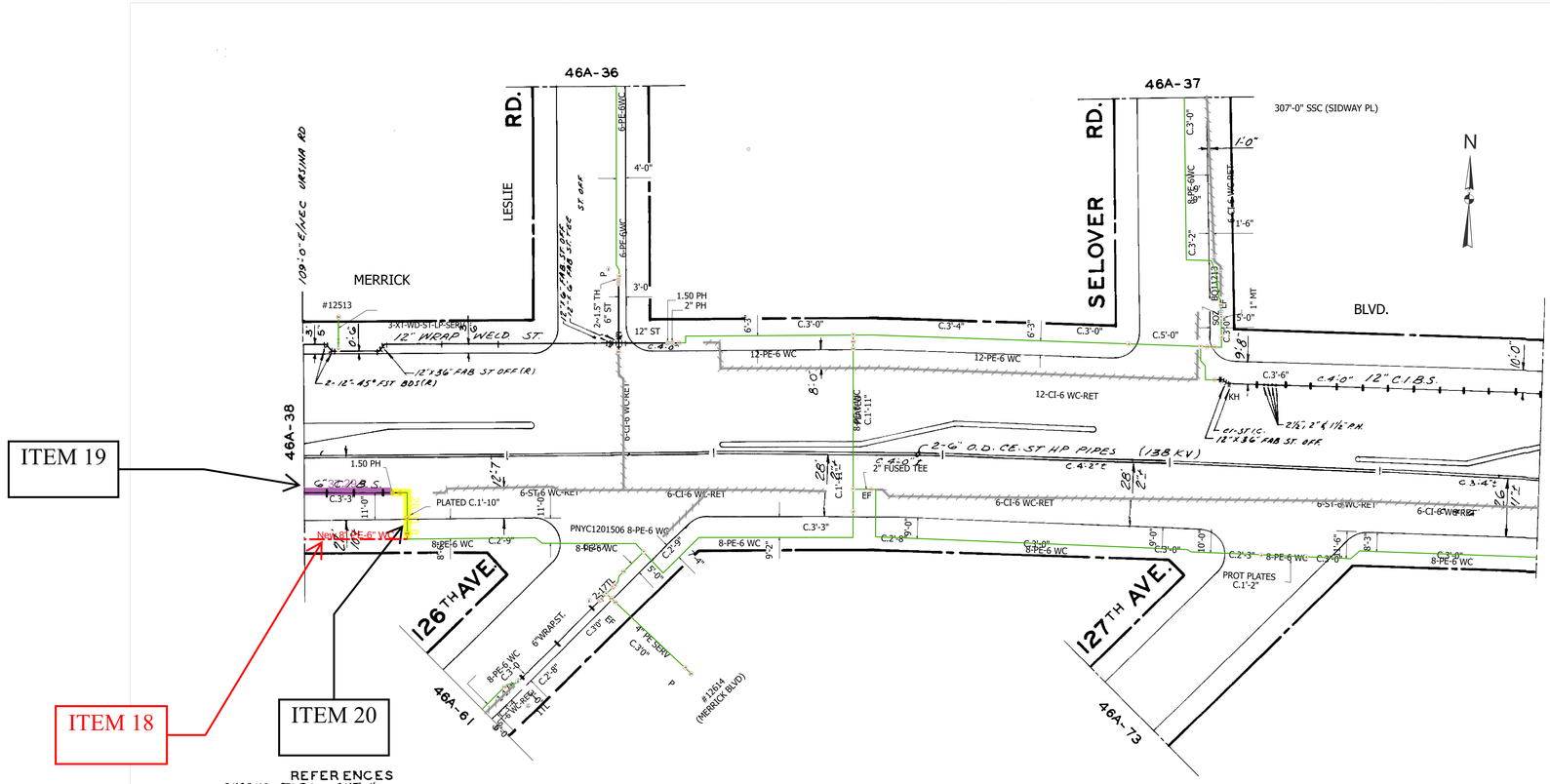

REFERENCES

QUEENS TOPO SHT #
ALTER #
JUNE 6-8, 1927 LAID 6" B.S. @ E/S (126), LAID 6" B.S. @ E/S (SELOVER) & ALSO LAID 12" B.S. @ N/S (MERRICK)
JAN 11-15, 1929 LAID 12" B.S. @ N/S (MERRICK) E & W. OF (LESLIE)
MAR 25-29, 1929 INST 2" R.C. @ N/S (MERRICK) FR (ANDERSON) TO (LESLIE)
JUNE 18, 1930 REPL 12" B.S @ N/S (MERRICK) EAST OF (LESLIE)
JUNE 20-23, 1930 LAID 6" B.S @ E/S (LESLIE) NORTH OF (MERRICK)
FEB 23, 1935 REPL. 6" B.S. @ E/S (LESLIE) NORTH OF (MERRICK)
APR 1, 1937 REPL 6" B.S. @ E/S (SELOVER) NORTH OF (MERRICK)
JULY 22, 1937 REPL 12" B.S @ N/S (MERRICK) EAST OF (127TH AVE)
JULY 23, 1937 REPL 6" B.S. @ S/S (MERRICK) WEST OF (127TH AVE)
MAY 3, 1938 REPL 12" B.S. @ N/S (MERRICK) EAST OF (SELOVER)
MAY 23, 1938 REPL 12" B.S @ N/S (MERRICK) WEST OF (SELOVER)
MAR 23, 1942 REPL 6" B.S @ E/S (126TH AVE) SOUTH OF (MERRICK)
OCT 29, 1951 INST 6" CONN. VAL. E/S (LESLIE) & 77'-0" N/WC (MERRICK)
SEPT 30 - OCT 7, 1958 RET 6" C.I. W/ 6" WR. ST @ E/S (126TH AVE) S/OF (MERRICK)
NOV. 17-21, 1958 REPL 6" C.I. W/ 6" ST. E/S (SELOVER) FR 19'-0" to 29'-6" N/WC (MERRICK)
NOV. 17-26, 1958 INST 6" & 12" U.C. @ E/S (SELOVER) NORTH OF (MERRICK)
MAR 30 - MAY 13, 1960 INST 24"-12" U.C. @ N/S (MERRICK) E & W. OF (SELOVER)
APR 4 - MAY 2, 1960 INST 28-6" U.C. @ S/S (MERRICK) EAST OF (126TH AVE)
FEB 9, 1972 REPL 6" C.I. W/ 6" WR. ST @ E/S (S) FR. 2'-0" S/NC. TO 33'-9" N/NC (M)
REPL 12" C.I. W/ 12" WR. ST @ N/S (M) FR 10'-0" W/EC TO 9'-0" E/EC (S)
FEB. 25-MAR 6, 1972 INST 6"x6" ST TEE @ S/S (M) & 6'-2" W/EC (127TH AVE)
W.O. 605329 APR 28, 1976 INST 2-17T @ 3'-0" N/SC (M) & 8'-0" W/EC (127TH AVE.)
W.O. 721767 NOV 19, 1976 INST 1-12" U.C. N/S (M) & 77'-0" E/EC (L)
DEC. 1977 PAVING O.H. # 7017 (MERRICK BLVD)
W.O. 728284 - NOV 1, 1979 1-6" U.C. @ 3'-0" N/SC (M) & 16'-0" W/EC (127TH AVE)
W.O. 666132 REPL 2-6" (1979) @ 3'-0" E/WC (126) & 2'-6" & 6'-0" N/SC (M)
APR 15, 1980 ADD 2-6" O.D. C.E. HP PIPES (138 KV) (MERRICK BLVD) C.E. DWG 143-145 & 15
W.O. 426023, APR 22-25, 1980 REPL 8-6" U.C. @ 7'-0" N/SC. (M) 140; 152 & 162' W/WC (129TH AVE) & 66; 78; 80; 92' E/EC. & 4'-6" E/WC (127TH AVE)
W.O. 426032 APR. 23, 1980 REPL 6-12" U.C. @ N/S (M) 32; 89; 100; 112 & 133' W/WC (ANDERSON)
W.O. 426088 MAY 2, 1980 REPL 1-6" U.C. @ 5' W/EC (L) & 23'-0" N/SC (M)
W.O. 426046 MAY 29, 1980 REPL 8-12" U.C. @ 2'-6" S/WC (M) 11'; E/WC, 0'-6", 11', 21', 33' 44', 56' & 67' W/WC (S)
W.O. 426043 APR. 28, 1980 REPL 8-6" U.C. @ 5' N/SC (M) 80; 91' 103' 114; 125; 137; 149' & 161' W/WC (126)
W.O. 426078 APR. 30, 1980 REPL 5-6" U.C. @ 2'-7" N/SC (M) & W/WC, 1'; 2; E/EC & 1' W/EC. (126)
W.O. 426081 MAY 1, 1980 REPL 4-12" U.C. @ 5' S/NC (M) 32; 42; 65; 75' E/EC (L)
REPL 1-6" U.C. @ 4' W/EC (L) 13'-0" S/NC (M)

REFERENCES CONT'D

W.O. 426047 APR 29-30, 1980 REPL 5-12" U.C. @ 3'-0" S/NC (M) 78; 89; 122; 133' W/WC (S) & 53' E/EC (L)
W.O. 426077 APR. 30, 1980 REPL 2-6" U.C. @ 6' N/SC (M) 12'; 18' N/WC (126)
W.O. 426085 MAY 1, 1980 REPL 1-6" U.C. @ 6' W/EC (L) & 25'-0" N/SC (M)
APR 28 - MAY 6, 1980 REPL 6" C.I. W/ 6" WR. ST @ S/S (M) FR 25'-9" TO 72" N/SW.L. (126) REC 6/0.80/9 ARC.
SEPT 4, 1980 REPL 6" C.I. W/ 6" WR. ST. @ S/S (M) FR 7'-2" W/EC TO 35'-5 E/EC (126) REC 6/107/0 ARC.
MAY 6 - 23, 1980 REPL 12" C.I. W/ 12" WR. WD. ST @ N/S (M) FR 41'-8" E/EC TO 16'-3" W/WC (L)
REPL 6" C.I. W/ 6" WR. WD. ST @ E/S (L) FR 40'-0" S/NC TO 35'-2" N/WC (M) REC. 6/079/0
W.O. 426035 APR. 25, 1980 REPL 7-6" U.C. NSC (M) & FR. 43'-0" TO 91'-0", 101'-0", 113'-0" W WC (127).
W.O. 426034 APR. 24, 1980 REPL 7-6" U.C. NSC (M) & 21'-0", 32'-6", 46'-0", 59'-0" EEC (127) & 7'-0", 19'-0", 31'-0" W WC (127).
W.O. 426044 MAY 5, 1980 REPL 6-6" U.C. NSC (M) & FR. 12'-1'-0" TO 179'-0" W WC (127)
W.O. 8400830055 OCT 12-17, 1984 INST 2-17T @ 13' NSC (M) & W: 2' W/EC (127) NF
W.O. 861110018 - MAR 23, 1987 INST. 2-17T @ 12'-0" NSC (M) & 40'-0" W SWPT (126) FB.

W.O.9011080161 NOV.29,1990 INST 3" X-TRU ST SERV. @(#12513 MERRICK BLVD) & 94' WWC (LESLIE RD)
(INFO.FR.COMP.SHT.) DA
WO 9112270104 DEC.27, 1991 INST 12" KH @ 9'-8" SNC (M) & 10' EEC (S) LV
WO 9104090049 DEC 18,1991-JAN 10,1992 INST 6-17 T @ 9'-8" SNC (M) & 7'-0" EEC (S) A.L.
W.O.9205190122 OCT 26,1992 INST 2-17T @ 13'-6" NSC (M) & 8'-0" EEC (127) LJ
WO 9309270058 NOV.21,1994 INST. 4-17# ANODES @ 9'8" SNC (M) & 9'EEC (S). GB

DEC 8-12, 2009 INSTALL 2" PE SERVICE ON E/S MERRICK BLVD (126 AVE) @ 53'-0" S/NC (M) FR MERRICK BLVD) PROJ# D55405 AP
JULY 23-SEPT.20,2010 REPL 6"CI & ST AND 12" CI W/12" & 8" PLDB ON (MERRICK BLVD) BET (126 AVE & 127 AVE) / PROJ#D48663 / AG
APR 20-MAY 25, 2012 REPL 6" CI & ST W/8" PE ON S/S (M) FR 75' ESEPI (126 AVE) TO 2' WSEPI (130 AVE) PJ#D69912 RM

46A-39

National Grid
Project No. QED1063AC
Sheet 8 of 8

0 15 30 60 90 120 US Feet

1 inch equals 30 feet

EP7-27A18

ID-46A-39

ID-46A-39

Legend

Anode
- In Service

Clamp
- In Service

Connection Point
- In Service

Coupling
- In Service

End Cap
- In Service

Elbow
- In Service

Reducer
- In Service

Saddle
- In Service

Sleeve
- In Service

Tee
- In Service

Transition
- In Service

Weld
- In Service

Critical Valve
- Normally Open
- Normally Closed

Main Valve
- Normally Open
- Normally Closed

Service Valve
- Normally Open
- Normally Closed

Proposed/Abandoned Valve
- Proposed
- Abandoned

SOP
- SOP Polygon

Service Pipe
Operating Pressure
- <=2 - Low
- >2 and <=18 - Intermediate
- >18 and <= 60 - High
- >60 and <=99 - High
- >99 and <=124 - High
- >125 and <=350 - High
- >350 and <=450 - High
- >450
- Other

Distribution Pipe
Operating Pressure
- <=2 - Low
- >2 and <=18 - Intermediate
- >18 and <= 60 - High
- >60 and <=99 - High
- >99 and <=124 - High
- >124 and <=350 - High
- >350 and <=450 - High
- >450
- Other

Transmission Pipe
Operating Pressure
- <=2 - Low
- >2 and <=18 - Intermediate
- >18 and <=60 - High
- >60 and <=99 - High
- >99 and <=124 - High
- >125 and <=350 - High
- >350 and <=450 - High
- >450
- Other

Pipeline Line (P)
- Distribution Pipe (P)

Pipeline Line (A)
- Service Pipe (A)
- Distribution Pipe (A)

NOTE: The location of surface and underground objects shown are not warranted to be correct. Refer to the world map for the most current SOP status

nationalgrid

VI - LISTING OF APPROXIMATE LOCATIONS OF EP-7 BID ITEMS QUANTITIES.

(NO TEXT IN THIS AREA, TURN PAGE)

SCOPE OF WORK
SUPPORT & PROTECTION
FOR CONTRACT NUMBER QED1063AC

The New York City Department of Design and Construction is planning to install new seepage and catch basins and all appurtenances within the project limits.

6.01.9 (NG) Support & Protect Gas Main Crossing Water Main Up To 20" In Diameter (Ea.)

Location	Qty
194th St & 111Th Road	1
Farmers Blvd & 112nd Ave	1
Farmers Blvd & 112nd Road	1
Farmers Blvd and 111th Road	1
Irwin Place and Roe Road	1
Madison St & Onderdonk Ave	1
Madison St & Seneca Ave	2
Merrick Blvd & Baisley Blvd	2
Merrick Blvd & URSANA Road	3
Sunbury Road and 120th Ave	1
Total	**14**

6.03 (NG) Removal Of Abandoned Gas Facilities. All Sizes (L.F.)

1500 in Various Locations

6.03.1 (NG) Removal Of Abandoned Gas facilities with Possible Coal Tar Wrap. All sizes. (L.F.) (For National Grid work Only)

1500 in Various Locations As Required

6.04 (NG) Adjust Hardware to Grade Using Spacer Rings/Adaptors (Street repaving) (Ea.)

6 in Various Locations As Required

6.05 (NG) Adjust Hardware to Grade by Resetting (Road Reconstruction) (Ea.)

6 in Various Locations As Required

6.06 (NG) Special Care Excavation & Backfilling (C.Y.)

800 in Various Locations, as Required.

6.07 (NG) Test Pits For Gas Facilities (C.Y.)

50 in Various Locations As Required

SCOPE OF WORK
SUPPORT & PROTECTION
FOR CONTRACT NUMBER QED1063AC

The New York City Department of Design and Construction is planning to install new seepage and catch basins and all appurtenances within the project limits.

6.09 (NG) Trench Excavation And Backfill For New Gas Mains & Services. Gas installed by others. (C.Y.) (For National Grid work Only)

50 in Various Locations As Required

6.11 (NG) Supports for Parallel Fully gas main in Trench (using Support Timber, Guy Cable Clamp, Wire Rope, etc.) (EA)

3 in Various Locations As Required

SCOPE OF WORK
SUPPORT & PROTECTION
FOR CONTRACT NUMBER QED1063AC QUEENS

The New York City Department of Design and Construction is planning to install new seepage and catch basins and all appurtenances within the project limits.

6.01.8 (ConEd) Support & Protect Gas Services Crossing Trenches and/or Excavations (Ea.)

F/O #44-44 College Pt. Blvd (Avery Ave) (UP11)
F/O #42-12 Haight St (UP12)
F/O #42-12 Maple Ave (UP12)
F/O #42-22 Maple Ave (UP12)
F/O #131-58 Maple Ave (UP12)
F/O #131-64 Maple Ave (UP12)
F/O #41-02 Delong St (UP14)
F/O #41-18 Delong St (UP14)
F/O #41-20 Delong St (UP14)

Total **9**

6.01.9 (ConEd) Support & Protect Gas Main Crossing Water Main Up To 20" In Diameter (Ea.)

- Support and Protect a 1 1/4" gas main crossing a 12" water main in the vicinity of: Int of Maple Ave & Haight St (UP12)
- Support and Protect a 2" gas main crossing a 12" water main in the vicinity of
W/S Int College Pt Blvd & Maple Ave (UP12)
E/S Int College Pt Blvd & Maple Ave (UP12)
- Support and Protect a 3" gas main crossing a 12" water main in the vicinity of:
S/W Int of Avery Ave. & College Pt. Blvd. (UP11)
N/W Int College Pt. Blvd & Avery Ave. (UP11)
- Support and Protect a 6" gas main crossing a 12" water main in the vicinity of:
N/E/C College Pt. Blvd. & Avery Ave. (UP11)
S/W Int College Pt. Blvd & Pople Ave (UP11)
- Support and Protect a 12" gas main crossing a 12" water main in the vicinity of W/S College Pt. Blvd., 65' N/N/C Avery Ave. (UP11)
E/S Int College Pt Blvd & Pople Ave (UP11)
N/E/C College Pt. Blvd & Avery Ave. (UP11)
N/E/C College Pt. Blvd & Avery Ave. (UP11)
W/S College Pt. Blvd., 60' N/N/C Fowler Ave. (UP11)
E/S College Pt. Blvd., 50' S/S/C Avery Ave. (UP11)
W/S Int College Pt Blvd & Sanford Ave (UP12)
E/S Int College Pt Blvd & Sanford Ave (UP12)
S/W Int College Pt Blvd & Maple Ave (UP12)
F/O #41-05 College Pt. (UP13)
N/E Int College Pt. Blvd & 41st Rd (UP13)
- Support and Protect a 16" gas main crossing a 12" water main in the vicinity of: F/O #44-41 College Pt. Blvd. (UP11)
N/E Int College Pt. Blvd & Avery Ave. (UP11)

Total **20**

SCOPE OF WORK
SUPPORT & PROTECTION
FOR CONTRACT NUMBER QED1063AC QUEENS

The New York City Department of Design and Construction is planning to install new seepage and catch basins and all appurtenances within the project limits.

6.03 (ConEd) Removal Of Abandoned Gas Facilities. All Sizes (L.F.)

Remove 1,065+/- LF of abandoned gas main at various locations, as required.

Total **1065**

6.06 (ConEd) Special Care Excavation & Backfilling (C.Y.)

At the following locations:
W/S Int College Pt. Blvd & Maple Ave (UP12)

(Hydrant)
W/S College Pt. Blvd., 45' S/S/C Maple Ave (UP11)
F/O #44-41 College Pt. Blvd (UP11)
F/O #41-38 College Pt. Blvd (UP12)
F/O #42-15 College Pt. Blvd (UP12)
F/O #42-02 College Pt. Blvd (UP12)
F/O #131-62 Maple Ave (UP12)
F/O #131-10 Maple Ave (UP12)
E/S College Pt. Blvd Bet. 41st Ave to 41st Rd (UP13)

(Gas Service)
F/O #44-44 College Pt. Blvd (Avery Ave) (UP11)
F/O #42-12 Haight St (UP12)
F/O #42-12 Maple Ave (UP12)
F/O #42-22 Maple Ave (UP12)
F/O #131-58 Maple Ave (UP12)
F/O #131-64 Maple Ave (UP12)
F/O #41-02 Delong St (UP14)
F/O #41-18 Delong St (UP14)
F/O #41-20 Delong St (UP14)

Total **100**

6.07 (ConEd) Test Pits For Gas Facilities (C.Y.)

50 CY at various locations, as required.

Total **50**

SCOPE OF WORK
SUPPORT & PROTECTION
FOR CONTRACT NUMBER QED1063AC QUEENS

The New York City Department of Design and Construction is planning to install new seepage and catch basins and all appurtenances within the project limits.

6.09A (ConEd) Trench Excavation And Backfill For New Gas Mains & Services. Gas installed by others. (C.Y.) (For Con Edison work only)

120 CY at various locations, as required.

Total **120**

SCOPE OF WORK
SUPPORT & PROTECTION
FOR CONTRACT NUMBER QED1063AC BRONX

The New York City Department of Design and Construction is planning to install new seepage and catch basins and all appurtenances within the project limits.

6.01.1 (ConEd) Support & Protect Gas Services Crossing Trenches and/or Excavations (Ea.)

- Support and Protect a "gas service crossing a" water main in the vicinity of:

BAINBRIDGE AVE BTW EAST FORDHAM AND COLES LA (W/S)	1
BAINBRIDGE AVE BTW COLES LA AND E. 193RD ST (W/S)	6
POE PL BTW COLES LA AND E. 194TH ST	1
BAINBRIDGE AVE BTW E. 193RD ST AND E. 194TH ST (W/S)	3
BAINBRIDGE AVE BTW E. 193RD ST AND COLES LA (W/S)	2
E. 193RD ST BTW BAINBRIDGE AVE AND MARIONA (N/S)	2
TOTAL	**15**

6.01.9 (ConEd) Support & Protect Gas Main Crossing Water Main Up To 20" In Diameter (Ea.)

- Support and Protect a " gas main crossing a" water main in the vicinity of :

BAINBRIDGE AVE BTW EAST FORDHAM RD AND COLES LA (W/S)	1
BAINBRIDGE AVE BTW COLES LA AND E. 193RD ST (W/S)	2
INT OF POE PL AND COLES LA	1
INT OF E. 193RD ST AND BAINBRIDGE AVE	1
INT OF E. 193RD ST AND MARION AVE	2
INT OF PITMAN AVE AND GRACE AVE	1
INT Of PITMAN AVE AND EDSON AVE	1
TOTAL	**9**

6.03 (ConEd) Removal Of Abandoned Gas Facilities. All Sizes (L.F.)

- Remove 6, 8, 10 LF of abandoned gas main at various locations, as required.

INT OF BUSSING AVE AND EDSON AVE (E/S)	60
INT OF BUSSING AVE AND EDSON AVE (W/S)	53
TOTAL	**113**

6.06 (ConEd) Special Care Excavation & Backfilling (C.Y.)

N/S EAST FORDHAM RD BTW BAINBRIDGE AVE AND MARION AVE	2
TOTAL	**2**

SCOPE OF WORK
SUPPORT & PROTECTION
FOR CONTRACT NUMBER QED1063AC BRONX

The New York City Department of Design and Construction is planning to install new seepage and catch basins and all appurtenances within the project limits.

6.07 (ConEd) Test Pits For Gas Facilities (C.Y.)

8 in Various Locations As Required

6.09A (ConEd) Trench Excavation And Backfill For New Gas Mains & Services. Gas installed by others. (C.Y.) (For Con Edison work only)

INT OF BUSSING AVE AND EDSON AVE (E/S)	23
INT OF BUSSING AVE AND EDSON AVE (W/S)	21
TOTAL	**44**

END OF EP7-PAGES

THE EP7-PAGES CONSIST OF **SIXTY-FOUR (64)** PAGES

HAZ - PAGES

SUPPLEMENTAL DOCUMENTATION FOR USE WITH SPECIFICATIONS FOR HANDLING, TRANSPORTATION AND DISPOSAL OF NONHAZARDOUS AND POTENTIALLY HAZARDOUS CONTAMINATED MATERIALS

NOTICE

THE PAGES CONTAINED IN THIS SECTION ARE ISSUED FOR THE PURPOSE OF SPECIFYING THE REQUIREMENTS OF THE CONTRACT DOCUMENTS AND HEREBY MADE PART OF SAID CONTRACT DOCUMENTS.

- Final -

Phase I Corridor Assessment Reports
for

Installation of Distribution Water Mains throughout Queens and the Bronx, New York

DDC PROJECT NO. QED1063AC

DDC TASK ID. 2024OEHS1458-01

WORK ORDER NO. OEHS-20248803584-WOL-0056

CONTRACT REGISTRATION NO. 20248803584

Prepared for:

Office of Environmental and Hazmat Services
30-30 Thomson Avenue, 3rd Floor
Long Island City, New York 11101

Prepared by:

Louis Berger U.S., Inc.
1 Penn Plaza, 2nd Floor
New York, NY 10119
Tel. (212) 612-7900
Fax (212) 363-4341

PROJECT NO. US0023336.3993

May 23, 2025

TABLE OF CONTENTS

1.0 PROJECT OVERVIEW 1

Phase I Corridor Assessment Reports

Location A – Madison Street and Onderdonk Avenue, etc., Queens, NY;

Location B – Bainbridge Avenue and East 194th Street, etc., Bronx, NY;

Location C – Bussing and Grace Avenues, etc., Bronx, NY;

Location D – Merrick and Baisley Boulevards, etc., Queens, NY;

Location E – College Point Boulevard and Sanford Avenue, etc., Queens, NY; and,

Location F – 194th Street and 112th Avenue, etc., Queens, NY.

.

1.0 PROJECT OVERVIEW

On behalf of the New York City (NYC) Department of Design and Construction (DDC), Louis Berger US, Inc. (Louis Berger), has prepared six Phase I Corridor Assessment Reports (Phase I CARs) for the QED1063AC Corridors in the Boroughs of Queens and the Bronx, New York to reasonably determine the potential for possible environmental contamination posed by properties within or adjacent to the Corridor boundaries. The QED1063AC capital improvement project consists of six Corridor segments in various locations throughout the Queens and the Bronx, New York.

The proposed infrastructure improvement activities include the installation of distribution water mains throughout Queens and the Bronx. The proposed work is being conducted to improve water quality and residual pressure in the area. Each of the Phase I CARs summarizes the data collected, reviewed, and analyzed by Louis Berger for the following six Corridor segments:

- Location A – Madison Street and Onderdonk Avenue, etc., Queens, NY;
- Location B – Bainbridge Avenue and East 194th Street, etc., Bronx, NY;
- Location C – Bussing and Grace Avenues, etc., Bronx, NY;
- Location D – Merrick and Baisley Boulevards, etc., Queens, NY;
- Location E – College Point Boulevard and Sanford Avenue, etc., Queens, NY; and,
- Location F – 194th Street and 112th Avenue, etc., Queens, NY.

- Final -

Phase I Corridor Assessment Report
for
Installation of Distribution Water Mains throughout Queens and the Bronx, New York Location A Corridor – Madison Street and Onderdonk Avenue, etc., Queens, NY

DDC PROJECT NO. QED1063AC
DDC TASK ID. 2024OEHS1458-01
WORK ORDER NO. OEHS-20248803584-WOL-0056
CONTRACT REGISTRATION NO. 20248803584

Prepared for:

Office of Environmental and Hazmat Services
30-30 Thomson Avenue, Third Floor
Long Island City, New York 11101

Prepared by:

Louis Berger U.S., Inc.
1 Penn Plaza, 2nd Floor
New York, NY 10119
Tel. (212) 612-7900
Fax (212) 363-4341
PROJECT NO. US0023336.3993

May 23, 2025

TABLE OF CONTENTS

EXECUTIVE SUMMARY ES-1
1.0 INTRODUCTION 1
1.1 Background Information 1
1.2 Scope of Work 2
2.0 CORRIDOR INFORMATION 3
2.1 Corridor Location, Description, and Use 3
2.2 Description of Surrounding Properties 3
2.3 Corridor and Regional Topographic Setting 3
2.4 Corridor and Regional Geology and Hydrogeology 4
3.0 CORRIDOR EVALUATION 6
3.1 Corridor Reconnaissance 6
3.2 Historical Fire Insurance Map Review 6
3.3 Regulatory Environmental Database Report Review 7
4.0 FINDINGS AND RECOMMENDATIONS 9

Figures

Figure 1 Topographic Corridor Location Map
Figure 2 Corridor Area Map
Figure 3 High Risk Sites

Tables

Table 1 DDC-Specific Risk Criteria
Table 2 Summary of Assessment Results (High Risk Sites)

Appendices

Appendix A Corridor Reconnaissance Photographs
Appendix B Historical Fire Insurance Maps
Appendix C Regulatory Environmental Database Report
Appendix D Qualifications of Environmental Professionals
Appendix E Statement of Limitations

EXECUTIVE SUMMARY

On behalf of the New York City (NYC) Department of Design and Construction (DDC), Louis Berger U.S., Inc. (Louis Berger) has prepared this Phase I Corridor Assessment Report (Phase I CAR) for the QED1063AC Corridor – Location A Corridor in the Ridgewood section of the Borough of Queens, New York to reasonably determine the potential for possible environmental contamination posed by properties within or adjacent to the Corridor boundaries. The approximately 0.35-mile (1,845-foot) long Corridor is comprised of the following street segments:

Street Segments	Length (feet)
Onderdonk Avenue from 90 feet northwest of Woodbine Street to 90 feet southeast of Putnam Avenue	730
Seneca Avenue from 120 feet northwest to 120 feet southeast of Madison Street	270
Woodbine Street from 20 feet northeast to 20 feet southwest of Onderdonk Avenue	75
Madison Street from 115 feet northeast of Onderdonk Avenue to 130 feet southwest of Seneca Avenue	690
Putnam Avenue from 25 feet northeast to 20 feet southwest of Onderdonk Avenue	80

Currently, the Corridor is developed with paved roadways, sidewalk areas, and existing infrastructure systems, and exhibits evidence of utilities, such as manholes, pavement scars, utility mark-outs, and valve covers. This indicates the presence of buried utilities, including gas, sewer, water, electric, and communications; in addition, overhead utilities are present along the Corridor. Adjoining property usage is a mixture of mostly residential properties consisting of multiple-story, apartment buildings along Madison Street, with residential apartments with some street-level retail and institutional spaces along Onderdonk Avenue, and apartments with street-level retail spaces along Seneca Avenue. Commercial properties along Seneca Avenue include restaurants, a pharmacy, a deli, and food markets. Commercial and institutional properties along Onderdonk Avenue include a community art space, Gotham Health, Iglesia Evangelica Casa Del Alfarero church, a fashion store, and a deli. The Metropolitan Transportation Authority (MTA) M line is located approximately 60 feet northwest of the Corridor. The nearest body of water is Newtown Creek, located approximately 1.16 miles (6,150 feet) to the west. Surrounding properties are mostly residential apartments with some commercial development.

The proposed infrastructure improvement activities include the installation of distribution water mains throughout Queens and the Bronx. The proposed work is being conducted to improve water quality and residual pressure in the area.

Figure 1 shows the location of the Location A Corridor on the United States Geological Survey (USGS) *7.5-minute Topographic Quadrangle Map for Brooklyn, New York* (2023).

The Corridor Assessment was comprised of a reconnaissance on March 5, 2025, to document current property uses and conditions; a review of historical Sanborn Fire Insurance Maps to document past property use; and a review of a regulatory agency database report to identify properties within the Corridor and adjoining sites with potential environmental conditions. Table 2 summarizes the results of the Corridor Assessment.

Based on the DDC Risk Criteria protocol, Louis Berger initially identified 285 "High" risk sites that might pose potential impacts to the Location A Corridor. After evaluation of additional modifying information, nine final "High" risk sites were identified.

"High" Risk Sites:

Site No.	Facility Name	Address	Risk Site No.
1	Apartments and parking area (historical filling station, garage and auto repair operations)	1851 to 1865 Woodbine Street	H#1
2	Supermoon Community Art Space, Apartments (historical silverware manufacturing and knitting mill operations)	1852 Woodbine Street, 751 to 753 Onderdonk Avenue	H#2
3	NYC Health & Hospitals/Gotham Health, Apartments (historical knitting mill operations)	1851 Madison Street, 761 to 769 Onderdonk Avenue	H#3
4	Apartments, Fashion Store (historical manufacturing operations)	1852 Madison Street, 775 to 777 Onderdonk Avenue	H#4
5	Apartments (historical manufacturing operations)	776 to 778 Onderdonk Avenue, 1836 Madison Street	H#5

Site No.	Facility Name	Address	Risk Site No.
6	Scorpion Records, Two Monsters Pet Shop, Rony's Deli & Grill, Apartments (historical manufacturing operations)	792 Onderdonk Avenue, 1835 and 5735 Putnam Avenue	H#6
7	Apartments, Coritas Pequenas (historical clay pipe manufacturing operations)	1815 to 1817 Putnam Avenue	H#7
8	Henry Schneider Real Estate & Insurance, Second Time Around Store, Apartments (historical drycleaning operations)	789 Seneca Avenue	H#8
9	Y&R Laundromat - Drycleaning	754 Seneca Avenue	H#9

A Phase II Subsurface Corridor Investigation (Phase II SCI) is recommended to determine whether the nine final "High" risk sites have impacted the Location A Corridor, and for waste characterization and dewatering purposes. The number of soil borings and temporary wells, as well as soil and groundwater samples, will be determined based on the depth and extent of the proposed excavation and field conditions, such as locations of utilities, presence of overhead utilities, and limited access due to scaffolding, and pedestrian or vehicular traffic. In addition, the extent of the investigation will also be determined by the proximal distances of the "High" risk sites relative to each other, allowing for strategic placement of representative boring locations to address potential contamination at multiple sites. The proposed subsurface investigation scope of work should be submitted to the DDC for review and approval prior to implementation.

1.0 INTRODUCTION

1.1 Background Information

On behalf of the New York City (NYC) Department of Design and Construction (DDC), Louis Berger U.S., Inc. (Louis Berger) has prepared this Phase I Corridor Assessment Report (Phase I CAR) for the QED1063AC Corridor – Location A Corridor in the Ridgewood section of the Borough of Queens, New York to reasonably determine the potential for possible environmental contamination posed by properties within or adjacent to the Corridor boundaries. The approximately 0.35-mile (1,845-foot) long Corridor is comprised of the following street segments:

Street Segments	Length (feet)
Onderdonk Avenue from 90 feet northwest of Woodbine Street to 90 feet southeast of Putnam Avenue	730
Seneca Avenue from 120 feet northwest to 120 feet southeast of Madison Street	270
Woodbine Street from 20 feet northeast to 20 feet southwest of Onderdonk Avenue	75
Madison Street from 115 feet northeast of Onderdonk Avenue to 130 feet southwest of Seneca Avenue	690
Putnam Avenue from 25 feet northeast to 20 feet southwest of Onderdonk Avenue	80

Currently, the Corridor is developed with paved roadways, sidewalk areas, and existing infrastructure systems, and exhibits evidence of utilities, such as manholes, pavement scars, utility mark-outs, and valve covers. This indicates the presence of buried utilities, including gas, sewer, water, electric, and communications; in addition, overhead utilities are present along the Corridor. Adjoining property usage is a mixture of mostly residential properties consisting of multiple-story, apartment buildings along Madison Street, with residential apartments with some street-level retail and institutional spaces along Onderdonk Avenue, and apartments with street-level retail spaces along Seneca Avenue. Commercial properties along Seneca Avenue include restaurants, a pharmacy, a deli, and food markets. Commercial and institutional properties along Onderdonk Avenue include a community art space, Gotham Health, Iglesia Evangelica Casa Del Alfarero church, a fashion store, and a deli. The Metropolitan Transportation Authority (MTA) M line is located approximately 60 feet northwest of the Corridor. The nearest body of water is Newtown Creek, located approximately 1.16 miles (6,150 feet) to the west. Surrounding properties are mostly residential apartments with some commercial development.

The proposed infrastructure improvement activities include the installation of distribution water mains throughout Queens and the Bronx. The proposed work is being conducted to improve water quality and residual pressure in the area.

Figure 1 shows the location of the Location A Corridor on the United States Geological Survey (USGS) *7.5-minute Topographic Quadrangle Map for Brooklyn, New York* (2023).

1.2 Scope of Work

At the request of the DDC, the scope of the assessment was limited to:

1. Conducting a reconnaissance of the Corridor and the adjoining properties;

2. Providing photographic documentation of properties within, and adjacent to the Corridor that have been categorized as final "High" or "Moderate" risk sites, or otherwise considered a potential environmental concern;

3. Conducting a review of Sanborn Fire Insurance Maps to document historical property use along and surrounding the Corridor;

4. Conducting a review of government regulatory agency databases for properties along the Corridor and adjoining sites that are listed within a 1/8-mile radius of the Corridor centerline; and,

5. Submitting to the DDC a written Phase I Corridor Assessment Report (CAR) summarizing the sites or issues identified during the assessment that are considered to be of potential environmental concern to the project, providing recommendations for additional investigation and possible corrective actions, and writing a conclusion based on observations.

2.0 CORRIDOR INFORMATION

2.1 Corridor Location, Description, and Use

The approximately 0.35-mile (1,845-foot) long Location A Corridor is located in the Ridgewood section of the Borough of Queens, New York. Currently, the Corridor is developed with paved roadways, sidewalk areas, and existing infrastructure systems, and exhibits evidence of utilities, such as manholes, pavement scars, utility mark-outs, and valve covers. This indicates the presence of buried utilities, including gas, sewer, water, electric, and communications; in addition, overhead utilities are present along the Corridor. Adjoining property usage is a mixture of mostly residential properties consisting of multiple-story, apartment buildings along Madison Street, with residential apartments with some street-level retail and institutional spaces along Onderdonk Avenue, and apartments with street-level retail spaces along Seneca Avenue. Commercial properties along Seneca Avenue include restaurants, a pharmacy, a deli, and food markets. Commercial and institutional properties along Onderdonk Avenue include a community art space, Gotham Health, Iglesia Evangelica Casa Del Alfarero church, a fashion store, and a deli.

The Location A Corridor Area is shown on Figure 2.

2.2 Description of Surrounding Properties

Surrounding properties are mostly residential apartments, with mixed-use apartments with street-level retail along Onderdonk and Seneca Avenues to the northwest and southeast, and along Cypress Avenue to the south. Rosemary's Playground is located north of the Corridor. The MTA M line is located approximately 60 feet northwest of the Corridor. Newtown Creek is located approximately 1.16 miles (6,150 feet) west of the Corridor.

2.3 Corridor and Regional Topographic Setting

Louis Berger reviewed the USGS *7.5-minute Topographic Quadrangle Map for Brooklyn, New York* (2023) to identify the topography at the Location A Corridor. The Corridor exhibits a topographic elevation change of approximately 8 feet. The elevation of the Corridor ranges from approximately 90 feet above mean sea level (msl) on the northeastern portion of the Corridor at the intersection of Onderdonk Avenue and Madison Street, and decreases to approximately 82 feet msl on the southwestern portion of the Corridor at the intersection of Seneca Avenue and Madison Street. Under natural conditions, surface runoff at the Location A Corridor would be expected to follow the topography, which slopes to the southwest.

2.4 Corridor and Regional Geology and Hydrogeology

Based on the *NYC Detailed Soil Survey* via Web Soil Survey (National Cooperative Soil Survey, Version 15, August 29, 2024), the Location A Corridor is situated within the Urban land Greenbelt complex (UGA), which consists of 78 percent of Urban land, till substratum, 12 percent Greenbelt and similar soils, and 10 percent minor components, with slopes between 0 to 3 percent.

The *NYC Reconnaissance Soil Survey* (2005) indicates that the Location A Corridor is underlain by the Pavement & Buildings, postglacial substratum, 0 to 5 percent slopes, which is classified as nearly level to gently sloping highly urbanized areas with more than 80 percent of the surface covered by impervious pavement and buildings, over glacial till; generally located in urban centers.

The *Ground-Water Resources of Kings and Queens Counties, Long Island, New York* (1999) indicates the surficial soils are underlain by Upper Pleistocene deposits consisting of outwash sand, gravel and silt to a depth of approximately 160 feet below grade (ftbg). These deposits are, in turn, underlain by Gardiners Clay, consisting of greenish-gray clay and silt and some interbedded sand to a depth of approximately 220 ftbg. The Gardiners Clay is underlain by an unnamed clay member of the Raritan Formation, which is underlain by crystalline metamorphic bedrock, expected to be encountered at approximately 300 ftbg. Based on the USGS *Geologic Map of New York, Lower Hudson Sheet* (1970), local bedrock geology is expected to consist of the Raritan Formation, part of the Coastal Plain Sediments. The bedrock is comprised of clay, silty clay, sand, and gravel.

According to the USGS *Long Island Depth to Water Viewer* (2013), groundwater depth is estimated to range from approximately 70 ftbg on the northwestern portion of the Corridor near the intersection of Onderdonk Avenue and Woodbine Street, to approximately 62 ftbg on the southeastern portion of the Corridor on Seneca Avenue between Madison Street and Putnam Avenue, with local shallow groundwater expected to flow southeasterly. All references to groundwater flow direction/hydraulic gradient in this report are based upon this assumption. Groundwater flow can also be influenced by seasonal fluctuations in precipitation, local variations in geology, underground anthropogenic structures, and/or local dewatering operations.

According to both the U.S. Fish and Wildlife Service (USFWS) *National Wetlands Inventory* and the New York State Department of Environmental Conservation (NYSDEC) *Environmental Resource Mapper*, no wetlands are located along the Location A Corridor. The nearest wetland is Newtown Creek, located approximately 1.25 miles (3,960 feet) northwest of the Corridor, which is classified by the USFWS as an Estuarine and Marine Deepwater habitat (E1UBL). Estuarine systems consist of deepwater tidal habitats and adjacent tidal wetlands that are usually semi-enclosed by land but have open, partly obstructed, or sporadic access to the open ocean, and in

which ocean water is at least occasionally diluted by freshwater runoff from land. This system also includes substrate that is continuously covered with tidal water and has at least 25 percent cover of particles smaller than stones (less than 0.2 feet). Additionally, tidal salt water continuously covers the substrate.

According to the Federal Emergency Management Agency (FEMA) *Flood Insurance Rate Map (FIRM) Panel 3604970209F* (FEMA, 2007), the Location A Corridor is not located within the 100-year (1% annual chance of flood) or 500-year (0.2% annual chance of flood) flood zones.

3.0 CORRIDOR EVALUATION

Based on a review of the regulatory environmental database report and historical fire insurance maps, as well as observations from the Corridor reconnaissance, the Location A Corridor was evaluated to determine potential environmental risks due to historical and current usage of the Corridor and adjacent properties. Sites identified from the Corridor reconnaissance, historical map review, and environmental database report evaluation are categorized using the DDC Risk Criteria in Table 1 and placed in a Risk Category of "High", "Moderate", or "Low" to allow for consistent evaluation of the potential risk posed by certain establishments.

3.1 Corridor Reconnaissance

A Corridor reconnaissance was performed by Mr. James Hampsey, Project Engineer of Louis Berger, on March 5, 2025, to visually identify sites of potential environmental concern based on their current use and/or conditions located within and adjoining the Corridor. Available project information and an environmental database report were correlated with street address, block and lot information, regulatory agency database listings, and Sanborn Map review. One additional risk sites was identified during the Corridor reconnaissance, which included a drycleaning operation. Corridor photographs are presented in Appendix A.

3.2 Historical Fire Insurance Map Review

Environmental Data Resources, Inc. (EDR) of Shelton, CT provided historical Sanborn Fire Insurance Maps for the Location A Corridor. The purpose of the Sanborn Map review was to identify sites of potential environmental impact within and adjoining the Corridor based on their historical use. Louis Berger reviewed copies of Sanborn Fire Insurance Maps for the Corridor for the years 1902, 1914, 1936, 1950, 1980, 1982, 1985, 1986, 1988, 1990 to 1996, 1999, and 2001 to 2006. This information was utilized during the Corridor reconnaissance to correlate historical properties of environmental concern with their current street address, block, and lot information.

In 1902, the northeastern portion of the Corridor is shown as predominantly undeveloped, and the southwestern portion of the Corridor is shown as partially developed with a few residential dwellings on Madison Street and two stores on Seneca Avenue (formerly Covert Avenue). A clay pipe manufacturing facility is shown east of the Corridor, on Putnam Avenue. In 1914, the Corridor is shown as fully developed, with the exception of the northwestern portion of the Corridor. The properties along Onderdonk Avenue and Seneca Avenue are developed with commercial stores and the properties along Madison Street are developed with residential dwellings. The B.R.T.

Railroad right-of-way is shown to the northwest of the Corridor. In 1936, the northwestern portion of the Corridor is developed with multiple auto stalls, as well as two gas tanks (1853 to 1861 Woodbine Street). A health clinic and knitting mill are shown on the northeastern side of Onderdonk Avenue, between Woodbine Avenue and Madison Street. The remainder of the Corridor appears similar to the 1914 map; however, the residential properties previously noted as dwellings along Madison Street are now shown as apartments. In 1950, a filling station is also noted at the property on the northwestern portion of the Corridor (1853 to 1861 Woodbine Street), a silverware manufacturing facility is noted on the northeastern side of Onderdonk Avenue (1852 Woodbine Street), and the health clinic remains present next to this. The remainder of the Corridor appears largely unchanged from the 1936 map.

In the 1980 map, an auto repair is now shown next to the filling station at 1853 to 1861 Woodbine Street. The property previously occupied by a silverware manufacturing facility is now developed as a knitting mill. Several unspecified manufacturing operations are shown on the eastern portion of the Corridor, on the northeastern and southwestern sides of Onderdonk Avenue. No significant changes are observed from the 1982 to 1999 maps. In 2001, the filling station previously noted at the northeastern portion of the Corridor, is depicted as commercial, and in the 2005 map, the entire property at 1853 to 1861 Woodbine Street is shown as vacant. No significant changes to the Corridor or surrounding area are depicted in the 2006 Sanborn map.

Copies of the Sanborn Fire Insurance Maps are provided as Appendix B.

3.3 Regulatory Environmental Database Report Review

An environmental database report was obtained from EDR to review available regulatory environmental databases to identify sites that are known to be contaminated or pose potential environmental risk within a 1/8-mile radius of the Corridor centerline. Databases searched include, but are not limited to: National Priority List (NPL); Superfund Enterprise Management System (SEMS [formerly known as CERCLIS]); Superfund Enterprise Management System Archive (SEMS-ARCHIVE [formerly known as NFRAP]); Resource Conservation and Recovery Act (RCRA) Treatment, Storage, and Disposal facilities (TSD); RCRA Corrective Action Report (CORRACTS); RCRA Generators (GEN); Emergency Response Notification System (ERNS); New York State Inactive Hazardous Waste Sites (State Sites); New York State 1990 Spills (Spills-1990); New York State Solid Waste Landfills (SWL); New York State Regulated Underground Storage Tanks / Aboveground Storage Tanks (REG UST/AST); and, New York State Leaking Underground Storage Tanks (LUST). The environmental regulatory database report is provided as Appendix C. A list of risk sites identified from the review of regulatory environmental database

report is presented in Table 2, Summary of Assessment Results (High Risk Sites). Figure 3 shows the locations of the final "High" sites relative to the Corridor.

4.0 FINDINGS AND RECOMMENDATIONS

Louis Berger conducted a reconnaissance of the Location A Corridor to document property use and conditions, reviewed historical fire insurance maps to document historical uses, and reviewed a regulatory environmental database report to identify sites with reported environmental conditions that could impact the proposed construction at the Corridor.

After evaluation of modifying information, such as sites with spills that had been closed by the NYSDEC, sites identified on one or more databases with no evidence or records of spills, or older sites that were redeveloped or restored such that they no longer posed significant risks, Louis Berger recommends that none of the 285 initial "High" risk sites be reclassified as "Moderate" risk sites, and 276 of the 285 initial "High" risk sites be reclassified as "Low" risk sites. Therefore, the final evaluation has identified the following nine "High" risk sites that might pose potential impacts on the Corridor. Details of the final "High" risk sites are shown on Table 2. Figure 3 shows the locations of the final "High" risk sites relative to the Corridor.

"High" Risk Sites:

Site No.	Facility Name	Address	Risk Site No.
1	Apartments and parking area (historical filling station, garage and auto repair operations)	1851 to 1865 Woodbine Street	H#1
2	Supermoon Community Art Space, Apartments (historical silverware manufacturing and knitting mill operations)	1852 Woodbine Street, 751 to 753 Onderdonk Avenue	H#2
3	NYC Health & Hospitals/Gotham Health, Apartments (historical knitting mill operations)	1851 Madison Street, 761 to 769 Onderdonk Avenue	H#3
4	Apartments, Fashion Store (historical manufacturing operations)	1852 Madison Street, 775 to 777 Onderdonk Avenue	H#4
5	Apartments (historical manufacturing operations)	776 to 778 Onderdonk Avenue, 1836 Madison Street	H#5
6	Scorpion Records, Two Monsters Pet Shop, Rony's Deli & Grill, Apartments (historical manufacturing operations)	792 Onderdonk Avenue, 1835 and 5735 Putnam Avenue	H#6

Site No.	Facility Name	Address	Risk Site No.
7	Apartments, Coritas Pequenas (historical clay pipe manufacturing operations)	1815 to 1817 Putnam Avenue	H#7
8	Henry Schneider Real Estate & Insurance, Second Time Around Store, Apartments (historical drycleaning operations)	789 Seneca Avenue	H#8
9	Y&R Laundromat - Drycleaning	754 Seneca Avenue	H#9

A Phase II SCI is recommended to determine whether the nine final "High" risk sites have impacted the Location A Corridor, and for waste characterization and dewatering purposes. The number of soil borings and temporary wells, as well as soil and groundwater samples, will be determined based on the depth and extent of the proposed excavation and field conditions, such as locations of utilities, presence of overhead utilities, and limited access due to scaffolding, and pedestrian or vehicular traffic. In addition, the extent of the investigation will also be determined by the proximal distances of the "High" risk sites relative to each other, allowing for strategic placement of representative boring locations to address potential contamination at multiple sites. The proposed subsurface investigation scope of work should be submitted to the DDC for review and approval prior to implementation.

Report Prepared By:

Michelle Locke,
Project Scientist

Report Reviewed By:

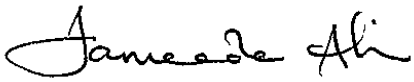

Fameeda Ali, CHMM, ENV SP
Manager

FIGURES

FIGURE 1 - TOPOGRAPHIC CORRIDOR LOCATION MAP

FIGURE 2 - CORRIDOR AREA MAP

FIGURE 3 - HIGH RISK SITES

FOR PHASE I CORRIDOR ASSESMENT REPORT
PLEASE REFER TO THE FILES :
1) QED1063AC-HAZMAT 06.11.2025

JB-PAGES JOINT BID – OPEN COMPETITIVE

NOTICE

THE PAGES CONTAINED IN THIS JOINT BID (JB-PAGES) REPRESENT ADDITIONAL CONTRACT REQUIREMENTS THAT APPLY TO JOINT BID CONTRACTS.

OPEN UNIT PRICE JOINT BID

SPECIFICATIONS FOR JOINT BID WORK

1. The Contractor shall be responsible for compliance with all the provisions of the following Articles, Appendixes, Specifications, Sketches and Scope of Work, which are hereby made a part of the original Contract Documents:

   A. The "2025 Joint Bid Agreement", in these JB-Pages

   B. The Joint Bid Special Specifications, in these JB-Pages

   C. Private Utilities Participating List, in these JB-Pages

   D. Private Utilities Scopes of Work, in these JB-Pages

   E. Private Utilities Test Pits and Sketches, in these JB-Pages

   F. Private Utilities Drawing List, in these JB-Pages

   G. The Private Utilities reference document called "JOINT-BIDDING SPECIFICATIONS AND SKETCHES FOR LOWER MANHATTAN" dated August 1, 2005 as amended below

   1. Refer to the Private Utility reference document called "JOINT-BIDDING SPECIFICATIONS AND SKETCHES FOR LOWER MANHATTAN", Specification for JB 450, pages 56, 57, and 58;

      Note: Items under JB 450 are task driven operation items and are not based on crew size. These items are divided into three unique types, each of which provides a description of applicability and typical use. The "Method of Measurement", on page 57, states that "The actual crew performing the operation will not be considered by the facility operator, in consultation with the Resident Engineer, when determining the applicable Unit Item Type, which shall be only as per the task performed."

   2. Refer to the Private Utility reference document called "JOINT-BIDDING SPECIFICATIONS AND SKETCHES FOR LOWER MANHATTAN", Specification for JB 225, page 10, Article A. Description;

      Delete the last four lines of text in their entirety, beginning with the words: "accordance with Specification under Addendum #1, . . .";

      Substitute the following revised text: "accordance with Specification Section 7.18 – Controlled Low Strength Material (CLSM), in the Standard Highway Specification. All backfill within the maximum excavation limits shown in Sketch No. JB 225 shall be of controlled low strength material (CLSM) in compliance with requirements of Section 7.18, and its cost shall be deemed included in this item."

   3. Refer to the Private Utility reference document called "JOINT-BIDDING SPECIFICATIONS AND SKETCHES FOR LOWER MANHATTAN", Specification for JB 225, page 10, Article B. Materials;

      Delete the first sentence in its entirety, beginning with the words: "Furnish Controlled Low Strength Material fill or backfill . . .";

Substitute the following revised sentence: “Furnish Controlled Low Strength Material fill or backfill as required and specified in Section 7.18 – Controlled Low Strength Material (CLSM), of the Standard Highway Specification.”

4. Refer to the Private Utility reference document called “JOINT-BIDDING SPECIFICATIONS AND SKETCHES FOR LOWER MANHATTAN”, Specification for JB 226, page 12, Article A. Description;

Delete the last five lines of text in their entirety, beginning with the words: “accordance with Specification under Addendum #1, . . .”;

Substitute the following revised text: “accordance with Specification Section 7.18 – Controlled Low Strength Material (CLSM), in the Standard Highway Specification. All backfill within the maximum excavation limits shown in Sketch No. JB 225 shall be of controlled low strength material (CLSM) backfill in compliance with Section 7.18 in the Standard Highway Specifications, and its cost shall be deemed included in this item.”

5. Refer to the Private Utility reference document called “JOINT-BIDDING SPECIFICATIONS AND SKETCHES FOR LOWER MANHATTAN”, Specification for JB 226, page 12, Article B. Materials;

Delete the first sentence in its entirety, beginning with the words: “Furnish controlled low strength material fill or backfill . . .”;

Substitute the following revised sentence: “Furnish controlled low strength material fill or backfill as required and specified in Section 7.18 – Controlled Low Strength Material (CLSM), of the Standard Highway Specification.”

[NO FURTHER TEXT HERE.]

Requirements for Joint Bid Work

A. Definitions. Additional terms are defined in Standard Construction Contract and the Joint Bid Agreement, below.

1. The City is bidding jointly this project. The City has combined its Public Work, Interference Work, and Utility Work into one bid contract package. All prospective bidders should be alerted to the fact that the City prepared all specifications, drawings, and all other necessary contract documents for the Public Work, Interference Work, and Utility Work.

2. The City has prepared contract documents which include specifications, drawings and all other necessary contract documents for the Public Work, Interference Work, and Utility Work. The bid items, specifications, and estimated quantities have been designed to fully compensate the Contractor for its costs to perform the Public Work, Interference Work, and Utility Work.

3. The Contractor agrees that its bid items and prices for the Public Work, Interference Work, and Utility Work shall include all incremental costs and/ or additional compensation for performing Public Work including: coordination of its work with the Utilities, loss of productivity and efficiency, added cost or expense, loss of profit, other damages or impact costs that may be suffered by the Contractor because of direct or indirect obstructions due to the presence of Utility Facilities, such as conduits, ducts or duct banks containing conductors for live and/or abandoned electric, telephone, cable TV, any type of communication cables, "Non Cost Sharing" gas mains and services, steam mains, and various non-hazardous encasement materials or utility structures located within the Public Work project area.

4. In the bid solicitation documents, the City has provided estimates of quantities for both Specific Public Work Items, Specific Utility Work Items, and Specific Shared Items. Bidders are required to bid a unit price on all Work. For the purposes of identifying the lowest responsive and responsible bidder, a bidder's unit prices bid must be calculated based on all Work, which includes the combined Specific Public Work Items, the Specific Utility Work Items, and the Specific Shared Items.

5. The City and the Utilities may use any applicable item from the Bid Schedule regardless of whether the item is considered or defined as a City item or Utility item.

7. Overruns and Utility Extra work will be handled in accordance with the Agreement and Item JB 9.28, ALLOWANCE FOR UTILITY EXTRA WORK.

8. Where the Contract contains Value Engineering (VE) language, utility VE proposals are specifically allowed, but must follow the Contract VE requirements.

9. Section JB 900 is not applicable and deemed deleted.

2025 JOINT BID AGREEMENT (FY26 PROJECTS)

THIS AGREEMENT (the **"Agreement"),** to jointly bid public and private work related to certain infrastructure improvement projects in New York City, dated the **29th day of July, 2025**, is made by and among the City of New York (the **"City"),** acting by and through its Department of Design and Construction **("DDC"),** and the Consolidated Edison Company of New York, Inc., **("Con Ed"),** Verizon New York Inc., **("Verizon"),** Empire City Subway Company (Limited) **("ECS"),** The Brooklyn Union Gas Company d/b/a National Grid NY and Keyspan Gas East Corporation d/b/a National Grid **("NG"),** Altice **("Altice"),** Charter Communications Operating, LLC **("Charter"),** the General Contractor's Association **("GCA")**, and the New York Road Contractor's Association **("NYRCA").**

RECITALS

WHEREAS, Sections 1 through 7, inclusive, of Chapter 322 of the Unconsolidated Laws of the State of New York, 2014 Regular Session, as amended, authorizes the City to, among other things, plan its work in New York City, as defined below, with the Utilities, as defined below, bid jointly with the Utilities, and

WHEREAS, the City and the Utilities believe that it is in the best interests of the people of the City and the customers of the Utilities to expedite construction, minimize disturbance to communities and reduce overall costs, and to enter into an agreement to implement the intentions of the Act;

NOW, THEREFORE, in consideration of the mutual promises and covenants set forth in this Agreement, the parties to this Agreement agree as follows:

ARTICLE 1

DEFINITIONS

1.1 **"Bid Schedule"** will mean an inclusive list of construction tasks, listed as bid items, with estimated quantities. Prior to advertisement, the Utilities will Pre-engineer and prepare a detailed scope of work that includes estimated items and quantities for their Interference Work, and the DDC will coordinate and consolidate the City's estimate for City work with the Utilities' estimates of Interference Work into a single unit price Bid Schedule. If there is extra work for the City or a Utility, then either the City or Utility may use any available applicable item from the Bid Schedule regardless of whether it is considered or defined as a City item or Utility item.

1.2 **"Business Days"** or **"Days"** shall mean Monday through Friday, excluding holidays.

1.3 **"City Accommodations"** shall mean any changes made to the Public Work at the request and expense of the Utility during Pre-engineering or at any other time and may include, but shall not be limited to, altering the location of City Facilities; changing the type of City Facilities constructed; extending the length or number of City Facilities constructed, including additional paving; and changing or adding materials used for the Public Work project.

1.4 **"City Contractor(s)"** or **"Contractor(s)"** shall mean a construction vendor that is awarded a contract by the City after it has submitted a bid to the City, and the City determined that the bid was responsive to the solicitation documents and that the bidder is a responsible vendor eligible to receive public monies.

1.5 **"City Facility(ies)"** shall mean any facility owned by the City, including, but not limited to, roadways, streets, highways, parkways and other thoroughfares, bridges, sewers, culverts, catch basins, chutes and water mains.

1.6 **"City's RE"** shall mean the City's resident engineer, who will have the overall responsibility for overseeing and managing all issues concerning safety, design, coordination, schedules as well as tracking and verifying quantities of work performed for the purpose of payments for the Joint Bid Project in a manner that is consistent with the terms and conditions contained with this Agreement. For the purposes of this Agreement, "City's RE" is

used interchangeably with “Resident Engineer” as defined in the Standard Construction Contract.

1.7 **"Commissioner"** shall mean the Commissioner of DDC.

1.8 **"Contingent Items"** shall mean the items to be taken and understood to mean all labor, material and equipment necessary to complete extra work. and for which unit prices have been fixed in the City’s construction contract.

1.9 **"DDC"** or **"Department"** shall mean the City's Department of Design and Construction, or any other agency or department that is acting as the Department's agent in the development or construction of Public Work projects and Joint Bid Projects.

1.10 **“Dispute”** shall mean any dispute, disagreement, or controversy between the Contractor and the Utility(ies) concerning their respective rights, performance, or obligations under the Contract Documents and the Agreement, excluding delay and time-impact claims.

1.11 **"DOT"** shall mean the City's Department of Transportation.

1.12 **“DRB”** shall mean the Disputes Review Board for settling Disputes between the Contractor and a Utility.

1.13 “**Extra Work**” shall have the definition from the City’s Standard Construction Contract.

1.14 **“Extra Utility Work**” shall mean Utility Work other than required by the Contract at the time of bid which is authorized by the Commissioner pursuant to the Standard Construction Contract.

1.15 **"Gas Agreement"** shall mean separate gas cost sharing allocation agreements, dated June 29, 1989, as amended, between the City and Con Ed and dated December 29, 1988, as amended, between the City and NG.

1.16 **"Joint Bid Project(s)"** shall mean a construction project in New York City that the City and Utilities agree, pursuant to this Agreement, will be awarded pursuant to the Procurement Policy Board Rules and this Agreement, and will include both City Facilities and Utility Facilities.

1.17 **"Interference Work"** shall mean such work as is required by the City or a Utility to be performed by the City Contractor during the performance of Public Work, as defined herein, in order to maintain, protect, support, shift, alter, relocate, remove, and/or replace Utility Facilities at the Utilities' expense.

1.18 **"Lay Outs"** shall mean the Utilities' plans, drawings, and schedules of scope, including, but not limited to, for any proposed Specialty Utility work.

1.19 **"MPS"** shall mean the maintenance and protection of the construction site of a Joint Bid Project.

1.20 **"MPT"** shall mean the maintenance and protection of the traffic on and near a Joint Bid Project.

1.21 **"Other Public Agency"** shall mean any government entity other than the City's DOT or Department of Environmental Protection. Such other government entities include, but are not limited to, the Port Authority of New York and New Jersey and the Transit Authority.

1.22 **"PPB Rules"** shall mean the City's Procurement Policy Board rules, as amended.

1.23 **"Pre-engineer"** or **"Pre-engineering"** shall mean a process undertaken by the Utilities on all Joint Bid Projects whereby the Utilities will determine the location of and mark out current Utility Facilities, and design the location and/or re-location of Utility Facilities in a manner that is to the extent practicable, efficient and cost-effective for both the City and the Utilities to avoid or ameliorate disturbances to the City Facilities and the Utilities Facilities, and in which the City and Utility participate in prior to the bid date of a Joint Bid Project contract, all in accordance with this Agreement.

1.24 **"Project Manager"** shall mean the individual(s) designated by each Utility to the Joint Bid Project as a full-time person with the authority to represent the Utility, render binding decisions on behalf of the Utility, coordinate all Utility Work and facilitate all necessary decisions regarding Utility Facilities.

1.25 **"Public Work"** shall mean the following: (a) construction, reconstruction, installation, alteration, maintenance, repair, grading, re-grading, regulating and improvement of roadways, highways, streets, parkways and other thoroughfares, and bridges and (b) similarly for sewers, culverts, catch basins, chutes and water mains. This also includes all City Accommodations.

1.26 **"REI"** shall mean the resident engineering and inspection services procured by the City in connection with a Joint Bid Project.

1.27 **"Shared Items"** shall mean the bid items in the City's construction contract in which the total cost will be paid for by the City and the Utilities in accordance with their share as described in Article 5.6 herein.

1.28 **"Specific Public Work Items"** shall mean a detailed set of specifications prepared by the City based on the City's engineering, design and plans that will represent the Public Work portion of the Joint Bid Project and it is these unit price items and quantities related to the Public Work that will be bid upon and evaluated by the City for the Public Work portion of the City's construction contract.

1.29 **"Specific Shared Items"** shall mean a detailed set of specifications prepared by the City based on the City's engineering, design and plans that will represent the Shared Items portion of the Joint Bid Project and it is these unit prices and quantities related to Shared Items that will be bid upon and evaluated by the City for the Shared Items portion of the City's construction contract.

1.30 **"Specialty Contractors"** shall mean any third-party contractors hired by a Utility to perform Specialty Utility Work.

1.31 **"Specialty Utility Work"** shall mean work traditionally performed only by the Utility using its own forces or Specialty Contractors that is necessary for the completion of the Joint Bid Project including, but not limited to, the installation and removal of insulation, "live" gas and steam work, pipe ripping, cable-related work and environmental clean-up work.

1.32 **"Specific Utility Work Items"** shall mean a detailed set of specifications prepared by the Utilities based on the Utility's Pre-engineering that will represent the Utility Work portion of the Joint Bid Project for which unit price items and quantities related to Utility Work will be bid upon by City Contractors and evaluated by the City for the Utility Work portion of the City's construction contract.

1.33 **"Utility Capital Work"** shall mean construction of new Utility Facilities, the cost of which is not normally expensed by the Utility in accordance with the New York State Public Service Commission's Uniform System of Accounts or generally accepted accounting principles, and which is not Interference Work, as defined herein.

1.34 **"Utility Facility(ies)"** shall mean the property owned by the Utilities, including, but not limited to. pipes, poles, conduits, wires, lines and other facilities, structures or property of the Utilities that may be below ground, at ground-level or above ground, that could disturb or interfere with the Public Work.

1.35 **"Utility"** or **"Utilities"** shall mean the following entities: (a) Con Ed, (b) Verizon, (c) ECS (d) NG, (e) Altice, (f) Charter, and any other franchise holder participating in the Joint Bid of a specific project.

1.36 **"Utility Work"** shall mean all Interference Work and Utility Capital Work.

1.37 **Other Definitions.** Capitalized terms used but not otherwise defined herein shall have the meanings ascribed to them in the City's Standard Construction Contract.

ARTICLE 2

EFFECTIVE DATE AND TERM OF AGREEMENT

2.1 General. This Agreement will apply only to those Joint Bid projects bid during City's FY26 capital program and includes Appendices "A", "B" and "C". Appendix "A" sets forth in detail the City's Pre-engineering requirements. Appendix "B" sets forth the City's standard terms and conditions. Appendix "C" sets forth the DRB procedures for Disputes between the Utilities and the City Contractors. Appendices "A", "B" and "C" are attached herein and shall constitute as part of this Agreement, as if fully set forth in this Agreement. If there are any conflicting provisions among this Agreement, Appendices "A", "B" and "C", the following order of precedence will be followed: this Agreement, Appendix "A", then Appendix "B", and then Appendix "C".

2.2 Effective Date. This Agreement shall become effective upon execution by the parties.

2.3 Term. The term of this Agreement will be for the period commencing on the Effective Date or until all of the Joint Bid Projects bid and awarded under the Act pursuant to this Agreement, unless earlier terminated in accordance with the terms and conditions of this Agreement.

2.4 Precatory Clauses. The precatory (Whereas) clauses above are made a part of this Agreement as if fully set forth herein.

ARTICLE 3

SCOPE OF THE AGREEMENT

3.1 General. The City may plan its Public Work with the Utilities, jointly bid such Public Work with Utility Work, and engage City Contractors to perform construction services on a Joint Bid Project. This Agreement will apply to projects identified by the City and mutually agreed to in writing by the Utilities, concurrent to the alignment meeting. Once agreed upon, a Utility must continue to participate in the joint bid for the execution of a Joint Bid Project.

3.2 Utilities Written Notification To The City That The Utilities Want A Joint Bid Project. For each Public Work project identified by the City as a candidate to be a Joint Bid Project, the Utilities agree to send a written notice to the City advising that the identified Public Work project may include the Utility Work and be jointly bid by the City as a Joint Bid Project pursuant to this Agreement. If a Utility chooses not to participate in the Joint Bid for a Project, then that Utility will be required to enter into a Section U agreement with the City Contractor, per separate UI Section (dated 10/24/2016) contract language.

3.3 Pre-engineering Requirement For The Utilities On All Joint Bid Projects. The Utilities agree to Pre-engineer the Utility Work on each Joint Bid Project, as further described below, and detailed further in Appendix "A".

3.4 Information and Items To Be Furnished By The Utilities On All Joint Bid Projects. The Utilities will furnish the City with all pertinent information available to the Utilities with regard to each specific Joint Bid Project, and the City will be entitled to rely on such information. Utilities will likewise be entitled to rely on the design and other documents supplied by the City with regard to each specific Joint Bid Project. To the extent requested by the City, the Utilities will assist the City and the City Contractor in obtaining such permits, and will assist the City in connection with applications to and hearings before authorities having jurisdiction over the construction, management and operation of the Joint Bid project. The Utilities will furnish such other items as may be mutually agreed upon by the City and the Utilities. If there is Specialty Utility Work that requires a permit, then the Utilities will secure at its own expense such permit.

3.5 City's Bid Documents For A Joint Bid Project. Upon completion of the Utilities' Pre-engineering, the City will include the Pre-engineered Utility Work in its contract solicitation documents to be competitively bid upon as a Joint Bid Project, as further described below. Any Lay Outs not part of the bid solicitation will be considered Extra Utility Work and handled as described in Article 6.15.2.

3.6 Plans and Title To Work. All drawings, plans and specifications developed by the City and the Utilities under this Agreement for each Joint Bid Project shall become the property of the City to be used in connection with each Joint Bid Project and any modifications thereto and, at the City's request, shall be delivered to the City, but the Utilities may retain and use copies thereof. Notwithstanding this paragraph 3.6, documents and drawings containing a Utility's critical infrastructure information will remain owned by that Utility.

3.7 Gas Facilities May Not Be Covered Under This Agreement. Gas facilities owned and operated by Con Ed and NG that are disturbed by proposed City water and/or sewer work may be covered under the terms and conditions of the Gas Agreements and, therefore, may not be affected by the terms and conditions of this Agreement. The City, Con Ed, and NG agree to coordinate, wherever necessary, their effort under this Agreement and the Gas Agreement. The Gas Agreement will apply to certain projects and is set to sunset, as determined by the NYC Department of Environmental Protection (NYCDEP), NG, and Con Ed.

3.8 Responsibility Under This Agreement Of Each Utility. The Utilities agree that each Utility shall be individually liable and responsible for the respective Utility's obligations and covenants under this Agreement.

3.9 Cooperation. The parties and their Specialty Contractors, if any, agree to cooperate with and assist, in every reasonable manner, with each other's insurance brokerage representatives and insurers with respect to accident prevention, claims procedure, and the adjustment of all claims arising out of operations within the scope of the Joint Bid Project, including litigation of such claims.

ARTICLE 4

PRE-ENGINEERING PHASE OF A JOINT BID PROJECT

4.1 General. Each Utility is responsible for Pre-engineering their Utility Facilities, both underground and overhead. Each Utility is responsible for coordinating all Pre-engineering and providing the City with a complete and comprehensive set of plans, specifications, estimated quantities and cost estimates with locations to the extent reasonably identifiable for the Utility Work to be performed by the City Contractor. The Pre-engineering plans and specifications will include, among other things, a requirement that the City Contractor will support and protect all Utility Facilities that are disturbed by or that interfere with the Public Work portion of any Joint Bid Project, all interferences caused by the Utilities Facilities, and identification of the type, locations and estimated quantities of various types of interferences to the Public Work caused by the Utilities Facilities. All Pre-engineering will comply with the requirements set forth in Appendix "A", attached hereto.

4.2 Pre-engineering City Accommodations. At the Pre-engineering phase of a Joint Bid Project, and at other times, the City and a Utility may agree on certain City Accommodations.

4.2.1 Payment For City Accommodations. If there are City Accommodations, then the City and the Utility will agree on the method for determining the amounts to be paid to the City by that Utility. The Utility will only pay the

City if the City Accommodations increase the cost of the Public Work as compared to the City's estimate of the Public Work costs without the City Accommodation. If the City Accommodation is agreed to by the City during Pre-engineering, then the amount to be paid, if applicable, will be determined by the City Contractor's bid. If the City Accommodation is agreed to after Pre-engineering is complete, then the amount to be paid will be done in accordance with the Extra Work provisions of the City's contract documents.

4.2.1.1 Payment By Utility To City Will Be Done By A Defined Date. If the City Accommodations are identified in Pre-engineering, then the Utilities agree to pay the City within thirty (30) calendar days from the date of award of the Joint Bid Project to the lowest responsive and responsible bidder. If the City Accommodations are identified after award of the Joint Bid Project, then the City will send a written notification to the Utilities stating the amount owed. The Utilities agree to pay the City within thirty (30) calendar days of the date of the City's notification to pay the amount identified in the written notification.

ARTICLE 5

BIDDING AND AWARDING OF A JOINT BID PROJECT

5.1 General. On all Joint Bid Projects, the City will prepare contract documents to include Public Work and Utility Work, and procure and award a contract pursuant to the applicable Laws, the PPB Rules, and this Agreement. The City will create a Bid Schedule for the Public Work portion of the Joint Bid Project and each Utility will create a Bid Schedule for the Utility Work portion of the Joint Bid Project, as further described below.

5.1.1 A Single Bid Schedule. On each Joint Bid Project, the City will notify the Utilities that each Utility's Pre-engineering and Bid Schedule will be due on a specified date. The City will review the Utilities' Bid Schedules for any apparent errors or inconsistencies with the City’s Bid Schedule. The City reserves the right to notify any Utility of any apparent errors or inconsistencies in its Bid Schedule and to request that the Utility revise and resubmit its Bid Schedule. When finalized, the Utilities' Bid Schedules and the City's Bid Schedule will be merged into a single Bid Schedule to be included in the bid and contract documents for the Joint Bid Project.

5.2 Preparation Of The City's Bid Documents For The Public Work Portion Of A Joint Bid Project. For the Public Work portion of each Joint Bid Project, the City will prepare specifications, drawings and all other necessary contract documents. The other contract documents include, among other things, a City Bid Schedule, general conditions, the City's Standard Construction Contract, as amended, and a set of performance-based technical specifications.

5.2.1 Preparation Of Specific Public Work Items By The City To Be Bid Upon. In addition to everything listed above, the City will prepare the Specific Public Work Items. In the bid solicitation documents, the City will identify the applicable unit prices from the Bid Schedule and provide estimates of quantities for each Specific Public Work Item. Bidders will be required to bid on the Specific Public Work Items.

5.3 Preparation Of The Utilities' Bid Documents For The Utility Work Portion Of A Joint Bid Project. For the Utility Work portion of each Joint Bid Project, each Utility will perform sufficient test pits and site investigations, prepare specifications, drawings, a Bid Schedule and all other necessary contract documents. The other contract documents include, among other things, a Utility Bid Schedule prepared by each Utility, general conditions, and a set of performance-based technical specifications, including a Utility Expanded Work Allowance fixed sum item for Extra Work.

5.3.1.1 Preparation Of Specific Utility Work Items By The Utilities To Be Bid Upon. In addition to everything listed above, each Utility will prepare its Specific Utility Work Items for all Specific Utility Work, overhead and underground. In the bid solicitation documents, the Utilities will identify the applicable unit prices from the Bid Schedule and provide estimates of quantities for each Specific Utility Work Item. Utility items that were on the Joint Bid Price List will have a Price Not Less Than (PNL) specified in the Bid Schedule. The PNL will be no lower than the Price List Amount, escalated annually based on the July update of the Engineering News-Record New York City Building Cost Index (ENR NYC BCI). The bidders will bid on the Utilities' Specific Utility Work Items.

5.4 Competitive Bid Procedures To Be Used By The City. The City will prepare a final set of contract solicitation documents to be competitively bid upon that will include a single Bid Schedule described in Article 5.1.1, the City's documents described in Article 5.2 and the Utilities documents described in Article 5.3.

5.5 Bidders Will Submit Unit Prices. The City's contract solicitation documents will require bidders to bid unit prices for all items.

5.6 Shared Items.

5.6.1 General Application Of Shared Items In A Bid And Contract. In general, during any Joint Bid Project there will be certain items performed by City Contractors that will be funded by the City and the Utilities. The Shared Items will be identified and agreed upon during Pre-engineering and may consist of bid items of a general nature, which are items of work applicable to all construction activities, both Public Work and the Utility Work. Examples of Shared Items include, but are not limited to, the following, where not otherwise included as part of another pay item (For clarity, JB items do not include MPT scope per Note 5 of the General Provisions in the "JOINT-BIDDING SPECIFICATIONS AND SKETCHES FOR LOWER MANHATTAN"):

5.6.1.1 Maintenance of site;
5.6.1.2 All items for MPT that are paid separately, such as:
- 5.6.1.2(a) Temporary curb;
- 5.6.1.2(b) Temporary pavement markings, and removal;
- 5.6.1.2(c) Temporary concrete barrier, with any associated fences;
- 5.6.1.2(d) Plastic barrels;
- 5.6.1.2(e) Pedestrian channelizers;
- 5.6.1.2(f) Temporary surface applied detectable warning units;
- 5.6.1.2(g) Temporary signs;
- 5.6.1.2(h) Timber barricades with or without lights;
- 5.6.1.2(i) Type III barricades, with or without lights;
- 5.6.1.2(j) Temporary fencing;
- 5.6.1.2(k) Crossing Guards and Pedestrian Managers;
- 5.6.1.2(l) Traffic Enforcement Agents;
- 5.6.1.2(m) Temporary pedestrian bridges;
- 5.6.1.2(n) Variable Message Boards;
- 5.6.1.2(o) Flashing arrow boards, with or without attenuators;
- 5.6.1.2(p) Decking; and
- 5.6.1.2(q) premium time for any MPT work.

5.6.1.3 Engineer's field office;
5.6.1.4 Early Completion Incentives;
5.6.1.5 Stormwater Pollution Prevention (SWPPP) work;
5.6.1.6 Mobilization.

5.6.2 Calculation Of Shared Items In A Bid. The bidder's bid shall reflect the agreed upon breakdown of Shared Items identified during Pre-engineering. In calculating the Shared Items, the costs will be prorated as follows:

5.6.2.1 City Portion. The cost for each Shared Item will be calculated by multiplying the bidder's bid item cost (Unit Price times Quantity Estimate) by the ratio of the sum of all Specific Public Work items to the total estimated value of all contract bid items, less Shared Items.

5.6.2.1(a) Other Public Agency Work. For the purposes of a Joint Bid Project, if the City is funded by an Other Public Agency to perform certain work related to a Joint Bid Project, the Other Public Agency costs will be included in the calculation of the City's portion described in Article 5.6.2.1 above, as if such work were Public Work items.

5.6.2.2 Utility Portion. The cost for each Shared Item will be calculated by multiplying the bidder's bid item cost (Unit Price times Quantity Estimate) by the ratio of all Specific Utility Work items to the total estimated value of all contract bid items, less Shared Items.

5.6.3 Calculation To Determine The Total Costs For The Parties.

5.6.3.1 For The City. The total cost of the Public Work will be the sum of the Public Work bid items plus the prorated cost of all Shared Items, which will be calculated as described above.

5.6.3.2 For The Utilities. The total cost of the Utility Work will be the sum of the Utility Work bid items plus the prorated cost of all Shared Items, which will be calculated as described above.

5.6.3.2(a) For Each Utility. Each Utility's prorated portion of the Shared Items shall be calculated by dividing the total cost for its Utility Work by the total cost for all Utility Work.

5.6.3.3 Total Cost. The total construction cost will be the sum of Articles 5.6.3.1 and 5.6.3.2.

5.7 The City's Evaluation Of A Bid On A Joint Bid Project. In compliance with the PPB Rules and the Act, the City will evaluate bids for an award in the following manner:

5.7.1 Evaluation To Determine That A Bid Is Responsive. The City will evaluate bids and determine if the lowest monetary bid is responsive. The Utilities have the opportunity to provide bid analysis of their utility scope for the City's use in determining responsiveness within a period of ten (10) days after the bid results are provided to the Utilities by the City. If the Utilities provide a bid analysis, they may request that the City obtain explanations or justifications for specific unit price items from the low bidder, in accordance with the Pre-Award Process Section in the contract's Bid Booklet. The PPB Rules set forth the factors affecting the responsiveness of bids. A responsive bid will, among other things, comply with all material terms and conditions of the City's contract solicitation documents. In addition, the City's construction contract will specify that a bidder's bid prices shall apply to each and every item contained in the Bid Schedule for the entire Joint Bid Project, regardless of whether the City or the Utilities have estimated a quantity for the item or items.

5.7.2 Evaluation To Determine That A Bidder Is Responsible. After the City has determined that a bid is responsive, the City will evaluate the bidder to determine if it is a responsible entity eligible to receive public funds. The PPB Rules set forth the factors affecting a bidder's responsibility. A responsible bidder will, among other things, affirmatively demonstrate to the City its responsibility, including, when necessary, the responsibility of its proposed subcontractors.

5.8 Calculation Of The Lowest Bid For The Joint Bid Project. The lowest bid for the Joint Bid Project will be calculated by combining the extended amounts (Bid unit price times estimated quantity) for the Specific Public Work Items, the Shared Items and the Specific Utility Work Items as set forth in the contract solicitation documents for the City and the Utilities.

5.9 The City's Award Of A Contract. In compliance with the Act, the City, in its sole discretion, will award a contract based on the lowest bid as submitted by a responsive and responsible bidder, as described above.

ARTICLE 6

ADMINISTRATION OF THE CONSTRUCTION PHASE OF A JOINT BID PROJECT

6.1 General. The City's contract documents will require the City Contractor to perform all Public Work and Utility Work. **Time Being Of The Essence**, the Parties will be required to prosecute the Joint Bid Project diligently.

6.2 General Management Of A Joint Bid Project. The administration of the City Contractors work will be handled in the following manner:

6.2.1 **Time Is Of The Essence.** The parties agree that **Time is of the Essence** on all Joint Bid Projects. The parties agree to cooperate, provide the appropriate personnel with the authority to act on behalf of their respective organizations, and to work together with all other parties, including the City Contractor, to ensure that the Joint Bid Projects will not be delayed for any reason.

6.2.2 Pre-Construction Phase Of A Joint Bid Project. As described above, the parties have different responsibilities during the pre-construction phase of a Joint Bid Project.

6.2.2.1 City's Responsibilities. The City will be responsible for specifying the Specific Public Work Items, preparing a complete set of contract documents to be bid upon, conducting the procurement in compliance with the PPB Rules and awarding a public improvements contract to a City Contractor.

6.2.2.2 Utilities' Responsibilities. The Utilities are responsible for Pre--engineering all of the Utility Work, providing the City a complete package of Pre-engineered Specific Utility Work Items and preparing a comprehensive and complete Utility Bid Schedule.

6.2.3 Construction Phase Of A Joint Bid Project. The parties will have the following general responsibilities during the construction phase of a Joint Bid Project:

6.2.3.1 City's General Responsibilities During Construction. The City will, among other things, be responsible for coordinating the schedule with the City Contractor to ensure that the work is completed in a timely manner, coordinating all Joint Bid Project coordination and construction meetings, and receiving payment requisitions from the City Contractor and making such payments to the City Contractor pursuant to the terms and conditions of the City's Standard Construction Contract.

6.2.3.2 Utilities' General Responsibilities During Construction. The Utilities will, among other things, be responsible, to ensure that the Joint Bid Project is completed in a timely manner, for:

1. Ensuring that all necessary information and Utility-provided materials (i.e. conduits, sweeps, ropes, protection plates, etc.) needed for the City Contractor to perform the Joint Bid Project will be available and provided to the City and the City Contractor in a timely manner;
2. Making decisions in a timely manner that will ensure that the Joint Bid Project work is completed in accordance with the schedule;
3. Performing any Utility Specialty Work (whether with Specialty Contractors or with the Utility's forces); and
4. Ensuring that such Utility Specialty Work (that cannot be performed by the City Contractor) is completed in a timely manner. All backfill and final paving must be performed by the City Contractor.

6.2.3.3 Acceleration Of Joint Bid Project During Construction. If the City decides to accelerate a Joint Bid Project and requires the City Contractor to work extended hours or weekend hours, then the associated labor and equipment overtime costs will be apportioned according to the percentage of the Shared Costs paid by the Utility. It is anticipated that the City will provide such notification before the acceleration commences, but in instances where the City does not, then the City will advise the Utilities on or before two (2) business days after the acceleration has been commenced by the City Contractor.

6.3 Schedules For Joint Bid Projects.

6.3.1 City's Responsibilities. The City will review and approve the City Contractor's baseline schedule and subsequent updates. The schedule must show activities for all required Utility Lay Outs and Utility Specialty Work . The City will provide to the Utilities copies of all approved schedules. The Utilities must certify to the City that the baseline schedule and all subsequent updates are accurate for the listed Utility Work, and that Lay Outs and Utility Specialty Work will be available in order to meet the schedule.

6.3.2 Utilities' Responsibilities. The Utilities will support the City's schedule in terms of funding, supplying Utility-provided material, and performing Specialty Utility Work, as needed, to progress the Joint Bid Project, including premium time (as described above in Article 6.2.3.3). The Utilities must provide estimated durations of their Specialty Utility Work activities to be incorporated into the City Contractor's progress schedule. The Utilities will provide the City, in a timely manner as determined by the approved construction schedule and before any work is commenced, with copies of their Lay Outs for any proposed Specialty Utility Work, so that the impact on the Public Work may be determined and verified. If Lay Outs are not provided in the required timeframe (except for due to acts or omissions of other parties), liquidated damages may be assessed per Section 8.5.

6.4 Project Meetings.

6.4.1 City's Responsibilities. The City will be responsible for conducting project meetings as needed to progress the Joint Bid Project.

6.4.2 Utilities' Responsibilities. Each Utility will assign a Project Manager to attend all such meetings and represent the Utility's interests and responsibilities concerning the Joint Bid Project. The Project Manager shall have the express authority to bind the Utility, render binding decisions, coordinate all Utility Work activity and facilitate all necessary decisions regarding the Utilities Facilities.

6.5 Monthly Utility Coordination Meetings For The City And Utilities Only.
The City and the Utilities will meet monthly to discuss all open issues for all Joint Bid Projects.

6.5.1 Agenda Of Utility Issues. The City will collect the Utilities' agendas to create a unified agenda for the meeting and will send it to the Utilities not later than three (3) business days before the next meeting.

6.5.2 City Agenda. The City may add to the Utilities' agenda and will provide such additional agenda items not later than two (2) Business Days before the next meeting.

6.5.3 City Representatives. The City will be represented at the meeting by at least one of its Infrastructure Deputy Commissioner, Associate Commissioner of Construction, Assistant Commissioner of Construction, or Chief Engineer. In addition, the City, in its sole discretion, may bring any other City employees with knowledge about the Joint Bid Projects that are listed on the agenda.

6.5.4 Utility Representatives. Each Utility will be represented at the meeting by individuals who will be authorized and empowered to act for and on behalf of the Utility on matters within the terms of this Agreement and the Joint Bid Contract. The Utilities will notify the City in writing of its representative, and this appointment will remain in full force and effect until written notice of the substitution is delivered to the City. In addition, the Utility, in its sole discretion, may bring any other Utility employees with knowledge about the Joint Bid Projects that are listed on the agenda.

6.6 Shop Drawing and Vendor Approvals.

6.6.1 City's Responsibilities. The City will review and approve the City Contractor's shop drawings and vendor approvals for City Facilities only. Since **Time is of the Essence,** such review shall be timely as not to delay the Joint Bid Project. The City construction contract will specify that the City Contractor shall provide all sketches and drawings (i.e., sheeting design, etc.) required by the Joint Bid Project contract documents for the approval of the City, for the installation of the City Facilities and the Utilities Facilities.

6.6.2 Utilities' Responsibilities. The Utilities will review and approve the City Contractor's shop drawings and vendor approvals for the Utility Facilities only. Since **Time is of the Essence,** such review shall be timely as not to delay the Joint Bid Project. The Utilities shall provide detailed construction specifications for all Utility Facilities to be constructed by the City Contractor. The Utilities shall provide written certification to the City that the materials furnished by the Utilities installed by the City Contractor for the Utility Facilities meets the requirements of the Utility.

6.7 Safety. Maintenance and Protection of Site and Traffic.

6.7.1 City's Responsibilities. The City will inspect the Joint Bid Project site and direct the City Contractor to implement the City Contractor's safety, MPS and MPT plans. The City or the City Contractor will provide the Utilities a copy of the City Contractor's safety plan on or before the date of the City's Notice To Proceed, but not later than ten (10) business days after the Notice To Proceed.

6.7.2 Utilities' Responsibilities. Before any Specialty Contractor starts working, the Utilities will give the City and the City Contractor a copy of the Specialty Contractor's safety plans as approved by the Utility, and will allow the City to monitor compliance with such safety plans. The Utilities agree that the Specialty Contractor's approved

safety plan shall, at a minimum, follow the City Contractor's safety plan in place on the specific Joint Bid Project. Where Utility Specialty Work or asset inspections and maintenance are performed by the Utility, other than as covered in Article 6.7.3 below, the Utility must obtain their own street opening permits.

6.7.3 City Contractor's Responsibilities. Where Utility Specialty Work is being performed within the City Contractor's work site and under the City Contractor's street opening permits, the City Contractor will accompany the Utility forces and/or Specialty Contractors and will remain responsible for all MPT, MPS, and final backfill and restoration, and where payment is required under the applicable item.

6.8 As-Built Drawings.

6.8.1 City's Responsibilities. The City will be responsible for producing as-built drawings of the City Facilities after completion of the Joint Bid Project.

6.8.2 Utilities' Responsibilities. The Utilities will be responsible for keeping records of all Utility Facilities. The Utilities agree to submit to DOT (with a copy provided to the City RE) as-built drawings of all newly constructed Utilities Facilities that do not conform to City DOT rules, regulations or specifications existing at the time the facilities are constructed.

6.9 Federal, State and Local Contract Requirements.

6.9.1 City's Responsibilities. The City will require that the City Contractor and its Subcontractors follow all applicable federal, state and local laws and rules, if applicable, including, but not limited to, relevant federal and state labor law and prevailing wage requirements, disadvantaged or locally based business enterprises requirements, and Buy-American requirements.

6.9.2 Utilities' Responsibilities. The Utilities will be responsible for ensuring that the Specialty Contractors are in compliance with all relevant federal, state and local laws and rules, including prevailing wages, if applicable.

6.10 Guarantees and Warrantees.

6.10.1 City's Responsibilities. The City will require that the City Contractors' duties, guarantee and warrantee of the Utility Facilities shall be as stipulated in the Utility specifications, except where the Utility Facility is altered, changed, or modified by the Utility or its Specialty Contractors.

6.10.2 Utilities' Responsibilities. The Utilities agree that upon release of retainage and/or any other withholdings by the City upon completion of the Joint Bid Project, the Utilities shall release the City from enforcement of any warrantees and/or guarantees of the City Contractor that extend beyond this time frame.

6.11 Responsibility of the Resident Engineers.

6.11.1 City's Responsibilities. The City's RE will have the overall responsibility for overseeing and managing all issues concerning safety, design, coordination, schedules and payments for all Public Work and Utility Work. In addition, the City RE will be responsible for all changes and disputes for the Work on each Joint Bid Project. The City's RE will have the authority to act on behalf of and make decisions in the field for the City, as further described in the City's standard construction contract. In addition, the City's RE will coordinate all Public Work and facilitate necessary decisions regarding the City Facilities. The City's RE will maintain records of all items and quantities of Public and Utility Work used as the basis for compensation to the City Contractor for such Work, and will hold monthly reconciliation meetings with the Utilities and the City Contractor. If requested by the Contractor or a Utility, the City's RE will provide copies of these records within two (2) days. As part of the duties, the City's RE will monitor and inspect the quality and quantities of work provided by the City Contractor for the Public and Utility Work. The City's RE will also maintain a record of all delays, regardless of the cause, and will notify each party.

6.11.1.1 City Inspection Reports and Job Diary. The City will provide inspectors that will maintain quantities for the Public Work and Utility Work. The City will maintain time and material records of extra or disputed Public and Utility Work. The City will maintain a record of workers and work accomplished and delays, including those caused by the unavailability of Specialty Contractors or the failure of the City Contractor to provide the site in a timely manner to the Utilities' Specialty Contractor. The City's records will be made available to the DRB, if requested by the DRB. The City will make its personnel and consultants available to testify as part of the DRB proceedings, if requested by the DRB.

6.11.2 Utilities' Responsibilities. The Utilities will identify and advise the City who will be classified as a Project Manager for the purposes of each Joint Bid Project and which Utilities that Project Manager will be working for. The Project Manager will have the responsibility to maintain records of all items and quantities of the Utility Work used as the basis for compensation to the City Contractor for such Utility Work in conformance with City standard record keeping practices and formats. The Project Manager will have the authority to act on behalf of and make decisions in the field for the Utilities, including determination of pay items to be used. In addition, the Project Manager will coordinate all Utility Work with the City Contractor and the City Work, and will facilitate necessary decisions regarding the Utilities' Facilities. As part of the duties, the Project Manager will monitor and inspect the quality and quantities of work provided by the City Contractor for the Utility Work.

6.11.2.1 Utility Inspection Reports and Job Diary. The Utilities will provide inspectors that will maintain quantities for the Utility Work alone. The Utilities will provide the City daily copies of all inspection reports by the next business day (i.e. Friday's reports will be given to the City on Monday). The Utilities will not maintain time and material records of extra or disputed City Work. As required, the Utilities shall maintain time and material records of extra or disputed Utility Work in conformance with the City's standard record keeping practices and formats for its construction contracts. The Utilities will maintain a record of workers and work accomplished and delays, regardless of cause. If the Utility Inspection daily report has different quantities of Utility Work from the City RE's daily report, the Utility Project Manager must reconcile the quantities within five (5) business days or the City RE's quantity will be used.

6.12 City Contractor Requisitions. Since **Time is of the Essence,** all reviews of City Contractor requisitions by the Utility shall be completed within five (5) business days upon receipt of such requisition. If there are any disputes, the Utilities will immediately notify the City, not later than two (2) business days after discovering the disputed issue. All requisitions must be project specific and cannot be billed more frequently than monthly.

6.12.1 City's Responsibilities. The City will be responsible for reviewing and approving City Contractor requisitions for the Public and Utility Work.

6.12.2 Utilities' Responsibilities. The Utilities will be responsible for reviewing City Contractor requisitions for the Utility Work only. The Utilities may request copies of City Contractor requisitions for the City or other Utilities, as well as City Contractor's certified payroll records and/or all other supports for City Contractor requisitions, which will be provided by City or City Contractor within five (5) days of such request by a Utility. A Utility's failure to object to a requisition within this timeframe will not constitute a waiver to City Contractor's requisition if anything in the requisition is improper or unreasonable.

6.13 Disputes Over A City Contractor's Payment Requisition And Invoice.

6.13.1 Disputes On Public Work Only. In general, the Bid Schedule will control with regard to the pricing of all items. Notwithstanding, there may be disagreements between the City and the City Contractor over the quantities of Public Work performed by the City Contractor or which unit prices are applicable to the Public Work performed by the City Contractor. If there are any disputes over a City Contractor's payment requisition and invoice for Public Work only, then the City's standard construction contract will govern how the City and the City Contractor will address such disputes.

6.13.2 Disputes On Utility Work Only. In general, the Bid Schedule will control with regard to the pricing of all items. Notwithstanding, there may be disagreements between the Utilities and the City Contractor over the quantities of

Utility Work performed by the City Contractor or which unit prices are applicable to the Utility Work performed by the City Contractor. If there are any Disputes over a City Contractor's payment requisition and invoice for Utility Work only, then all such Disputes will be resolved through the procedures set forth below and in Appendix "C".

6.13.2.1 The Utilities' Responsibilities In Identifying Disputes On Utility Work Payment Requisitions and Invoices. As provided in Article 8 below, the Utilities will review all payment requisitions by the City Contractor for the Utility Work only. If, during the review of a payment requisition, the Utility identifies an issue in the payment requisition for the Utility Work only, the Utility will immediately, but in no case longer than five (5) business days, notify the City and the City Contractor in writing. After sending such a written notice, the Utility agrees to meet with the City Contractor to resolve the issue. If the issue cannot be resolved, then the Utility or the City Contractor shall seek resolution according to the DRB procedures for resolving Utility and City Contractor Disputes, as set forth herein in Appendix "C", which will also be set forth in the City's Contract Documents for a Joint Bid Project. This DRB process will be outside the jurisdiction of the City's Standard Construction Contract disputes process. The parties agree that the performance of the Public Work shall continue during all negotiations, discussions, and DRB proceedings.

6.13.2.2 The Utilities· Responsibilities During The Resolution Of A Dispute On Utility Work Payment Requisitions and Invoices. During the resolution of a Dispute described in Article 6.13.2 above, the parties agree that the Utility will continue to review and approve payment requisitions submitted by the City Contractor, as described in Appendix “C". The parties agree that the Utility will not pay the City Contractor directly and that the City will continue to pay the City Contractor for these disputed work items.

6.13.2.3 Resolution Of A Dispute On Utility Work Payment Requisitions And Invoices. Once the DRB has made a decision or there has been a negotiated settlement, the Utility and the City Contractor shall notify the City within two (2) days from the date of the DRB's award or a negotiated settlement, and shall advise the City as to the final resolution of the Dispute, the amount of the award or settlement, and any necessary payment adjustments that may have to be made to the City Contractor's contract.

6.14 Time Extensions and Liquidated Damages. Notwithstanding any contrary provision in this Agreement, including Section 6.1 and any reference to time being of the essence, if a Utility or City Contractor cannot reasonably comply with a deadline or timeframe set forth in this Agreement, it will notify the City before expiration of the deadline of a need for extension, which notice shall include details and supporting documentation, as appropriate, reasonably sufficient for the City to evaluate such request, including the proposed length of the extension and the reason therefore. The City will review and consider all time extension requests. Liquidated damages, if assessed by the City on the Contractor or Utility, shall accrue to the City.

6.14.1 New York City Administrative Code. **Time is of the Essence** in completing the Joint Bid Projects. This Agreement shall in no way be construed to enlarge, limit, diminish or affect in any way any existing City rights or remedies regarding its authority with respect to support, protection and replacement of the Utilities' Facilities pursuant to the New York City Administrative Code.

6.14.2 Claims of Delay. The City's construction contract will specify that to the extent that the City Contractor claims or alleges that delays were caused by a Utility, the City Contractor may bring a claim against the Utility. Neither the City Contractor nor the Utility shall bring a delay claim action against the City either in a Court of Law or through the City's Standard Construction Contract’s dispute resolution board process. To the extent the City Contractor alleges a delay was caused by a Utility, the City Contractor will be limited to bringing such legal action in a Court of Law, and shall not be able to seek DRB resolution over any delay claims or delay-related claims. If the City Contractor and Utility initiate a legal action against each other, this legal action will be outside the jurisdiction of the City's Standard Construction Contract’s dispute resolution board process and the City shall not be a party in the litigation process. The Utilities and the Contractor agree to copy the City on all communications involving the litigation process and to notify the City of the final resolution, settlement or decision. All notifications involving claims of delay by the Contractor to a Utility must follow the requirements below.

6.14.2.1 After the commencement of any condition relating to the Utility Work which is causing or may cause a delay in completion of the Utility Work, including conditions for which the Contractor may be entitled to an extension of time, the following notifications and submittals are required:

1) Within fifteen (15) days after the Contractor becomes aware or reasonably should be aware of each such condition, the Contractor must notify the Utility (with a copy to the City's RE), in writing of the existence, nature and effect of such condition upon the approved progress schedule and the Work, and must state why and in what respects, if any, the condition is causing or may cause a delay. Such notice shall include a description of the construction activities that are or could be affected by the condition and may include any recommendations the Contractor may have to address the delay condition and any activities the Contractor may take to avoid or minimize the delay.

2) If the Contractor shall claim to be sustaining damages for delay as provided for in this Article, within forty-five (45) days from the time such damages are first incurred for each such condition, the Contractor shall submit to the Utility (with a copy to the City's RE) a verified written statement of the details and estimates of the amounts of such damages, including categories of expected damages and projected monthly costs, together with documentary evidence of such damages as the Contractor may have at the time of submission ("statement of delay damages"), as further detailed in Article 6.14.2.5. The Contractor may submit the above statement within such additional time as may be granted by the Utility in writing upon written request therefor.

6.14.2.2 Failure of the **Contractor** to strictly comply with the requirements of Article 6.14.2.1 shall be deemed a conclusive waiver by the **Contractor** of any and all claims for damages for delay arising from such condition and no right to recover on such claims shall exist.

6.14.2.3 Compensable Delays. Other than as set forth in Article 6.15, the Contractor agrees to make a claim only for additional costs attributable to delay in the performance of this Contract necessarily extending the time for completion of the Work or resulting from acceleration directed by the Commissioner and required to maintain the progress schedule, occasioned solely by any act or omission to act of the Utility listed below. The Contractor also agrees that delay from any other cause, except those described in Article 6.15, shall be compensated, if at all, solely by an extension of time to complete the performance of the Work.

A. The failure of the Utility to take reasonable measures to coordinate and progress the Utility Work to the extent required by the contract, except that the Utility shall not be responsible for the Contractor's obligation to coordinate and progress the Work of its Subcontractors.
B. Unreasonable delays attributable to the review of shop drawings, the issuance of change orders, or the cumulative impact of change orders that were not brought about by any act or omission of the Contractor.
C. Delays in the Utility's performance of its duties under the Joint Bid Project, including but not limited to, those attributable to the issuance of Lay Outs, the provision of Specialty Contractors, the provision of inspectors, the failure of the Utility to timely provide materials, the failure of the Utility to timely provide a sufficient scope of work for extra or unforeseen Utility Work, the failure of the Utility to timely provide a condition report for overhead wire and/or facilities, and the failure of the Utility to timely relocate Utility poles and/or wires.
D. The unavailability of the Site caused by acts or omissions of the Utility.
E. The issuance by the Utility of a stop work order that was not brought about through any act or omission of the Contractor.
F. Differing site conditions or environmental hazards that were neither known nor reasonably ascertainable on a pre-bid inspection of the Site or review of the bid documents or other publicly available sources, and that are not ordinarily encountered in the Project's geographical area or neighborhood or in the type of Work to be performed.
G. Delays caused by the Utility's bad faith or its willful, malicious, or grossly negligent conduct;
H. Delays not contemplated by the parties;
I. Delays so unreasonable that they constitute an intentional abandonment of the Contract by the Utility; and
J. Delays resulting from the Utility's breach of a fundamental obligation of the Contract.

K. No claim may be made for any alleged delay in Substantial Completion of the Work if the Work will be or is substantially completed by the date of Substantial Completion provided for in Schedule A unless acceleration has been directed by the Commissioner to meet the date of Substantial Completion set forth in Schedule A, or unless there is a provision in the Contract providing for additional compensation for early completion.
L. The provisions of this Article apply only to claims for additional costs attributable to delay and do not preclude determinations by the Utility allowing reimbursements for additional costs for Extra Utility Work under this Contract. To the extent that any cost attributable to delay is reimbursed as part of a change order or other agreement between the Utility and the Contractor, no additional claim for compensation under this Article 6.14.2 shall be allowed.

6.14.2.4 Non-Compensable Delays. The Contractor agrees to make no claim for, and is deemed to have included in its bid prices for the various items of the Contract, the extra/additional costs attributable to any delays caused by or attributable to the items set forth below.

A. The acts or omissions of any third parties, including but not limited to Other Contractors, Other Utilities, public/ governmental bodies, or private enterprises (other than the Utility's Specialty Contractor(s)), who are disclosed in the Contract Documents or are ordinarily encountered or generally recognized as related to the Work;
B. Any situation which was within the contemplation of the parties at the time of entering into the Contract, including any delay indicated or disclosed in the Contract Documents or that would be generally recognized by a reasonably prudent contractor as related to the nature of the Utility Work, and/or the existence of any facility or appurtenance owned, operated or maintained by any third party, as indicated or disclosed in the Contract Documents or ordinarily encountered or generally recognized as related to the nature of the Work;
C. Restraining orders, injunctions or judgments issued by a court which were caused by a Contractor's submission, action or inaction or by a Contractor's Means and Methods of Construction, or by third parties, unless such order, injunction or judgment was the result of an act or omission by the Utility;
D. Any labor boycott, strike, picketing, lockout or similar situation;
E. Any shortages of supplies or materials, or unavailability of equipment, required by the Contract Work;
F. Climatic conditions, storms, floods, droughts, tidal waves, fires, hurricanes, earthquakes, landslides or other catastrophes or acts of God, or acts of war or of the public enemy or terrorist acts, including the Utility's reasonable responses thereto; except that Utility-directed work stoppages due to heat conditions will not be an exception hereunder; and
G. Extra Work which does not significantly affect the overall completion of the Contract, reasonable delays in the review or issuance of change orders or field orders and/or in shop drawing reviews or approvals.

6.14.2.5 Required Content of Submission of Statement of Delay Damages
A. In the verified written statement of delay damages required by Article 6.14.2.1, the following information shall be provided by the Contractor:
   1. For each delay, the start and end dates of the claimed periods of delay and, in addition, a description of the operations that were delayed, an explanation of how they were delayed, and the reasons for the delay, including identifying the applicable act or omission of the Utility listed in Article 6.14.2.3.
   2. A detailed factual statement of the claim providing all necessary dates, locations and items of Work affected by the claim.
   3. The estimated amount of additional compensation sought and a breakdown of that amount into categories as described in Article 6.14.2.6.
   4. Any additional information requested by the Utility.

6.14.2.6 Recoverable Costs Delay damages may be recoverable for the following costs actually and necessarily incurred in the performance of the Utility Work. Contractor will only be able to recover the following costs to the extent that it has not already been compensated for such costs in accordance with Article 6.20 of this Agreement:
A. Direct labor, including payroll taxes (subject to statutory wage caps) and supplemental benefits, based on time and materials records;
B. Necessary materials (including transportation to the Site), based on time and material records;
C. Reasonable rental value of necessary plant and equipment other than small tools, plus fuel/energy costs

according to the applicable formula set forth in the City's Standard Construction Contract Articles 26.2.4 and/or 26.2.8, based on time and material records;

D. Additional insurance and bond costs;

E. Extended Site overhead, field office rental, salaries of field office staff, on-site project managers and superintendents, field office staff vehicles, Project-specific storage, field office utilities and telephone, and field office consumables;

F. Labor escalation costs based on actual costs;

G. Materials and equipment escalation costs based on applicable industry indices unless documentation of actual increased cost is provided;

H. Additional material and equipment storage costs based on actual documented costs and additional costs necessitated by extended manufacturer warranty periods; and

I. Extended home office overhead calculated based on the following formula:
   1. Subtract from the original Contract amount the amount earned by original contractual Substantial Completion date (not including change orders);
   2. Remove 15% overhead and profit from the calculation in item (1) by dividing the results of item (1) by 1.15;
   3. Multiply the result of item (2) by 7.25% for the total home office overhead;
   4. Multiply the result of item (3) by 7.25% for the total profit; and
   5. The total extended home office overhead will be the total of items (3) and (4).

J. Recoverable Subcontractor Costs. When the Utility Work is performed by a Subcontractor, the Contractor may be paid the actual and necessary costs of such subcontracted Work as outlined above in Articles A. through H. above and an additional overhead of 5% of the costs outlined in Articles A. through C. above.

K. Non-Recoverable Costs. The parties agree that a Utility will have no liability for the following items and the Contractor agrees it shall make no claim for the following items:
   1. Profit, or loss of anticipated or unanticipated profit, except as provided in Article I. above;
   2. Consequential damages, including, but not limited to, construction or bridge loans or interest paid on such loans, loss of bonding capacity, bidding opportunities, or interest in investment, or any resulting insolvency;
   3. Indirect costs or expenses of any nature except those included in Articles A. through I. above;
   4. Direct or indirect costs attributable to performance of Utility Work where the Contractor, because of situations or conditions within its control, has not progressed the Work in a satisfactory manner; and Attorneys' fees and dispute and claims preparation expenses.

6.15 Extra Work.

6.15.1 Extra Work For The City. If there are changes, extra work, or omitted work, regarding the Public Work only, then the City's Standard Construction Contract will govern how the City and the City Contractor will address such changes, extra work, or omitted work.

6.15.2 Extra Work For The Utilities.

6.15.2.1 Quantity Overruns For Utility Work Items With City Construction Contract Bid Items. Extra Utility Work and quantity overruns shall be permitted for Utility Work items. Where Utility Work items exist in the bid schedule, the pricing for Extra Utility Work and Utility bid item quantity overruns shall be determined in accordance with the following sliding scale ("Sliding Scale for Utility Extra Work and Utility Bid Item Quantity Overruns"), based on the percent increase over bid-estimated quantities.

Sliding Scale for Utility Extra Work and Utility Bid Item Quantity Overruns	
Quantity Range Over Bid Estimate	Payment Value Over Bid Price
100-125%	1.0 x Bid price
126-200%	1.25 x Bid price
201-300%	1.5 x Bid price
301-400%	1.75 x Bid price
401% and higher	2 x Bid price

For example, if the bid-estimated quantity for an item of Utility Work is 100 cubic yards (c.y.) and the Contractor bid $100/c.y., and the total quantity for this item ends up being 550 cubic yards, the Utility will pay the Contractor as follows for this item:

125 c.y. x $100/c.y =	$12,500
75 c.y. x $125/c.y. =	$9,375
100 c.y. x $150/c.y. =	$15,000
100 c.y. x $175/c.y. =	$17,500
150 c.y. x $200/c.y. =	$30,000

Thus, the total payment for this item will be $84,375.

(1) Extra Utility Work and/or quantity overruns caused by additions to the Public Work shall not be subject to the Sliding Scale for Extra Utility Work and Utility Bid Item Quantity Overruns.

(2) In the event field conditions necessitate a design change to the as-bid Public Work, and the design change results in additional quantities of Utility Work items, such additional quantities of Utility Work items shall not be subject to the Sliding Scale for Extra Utility Work and Bid Item Quantity Overruns.

(3) If Utility-caused field conditions necessitate a design change to the as-bid Public Work resulting in additional quantities of Utility Work items, such additional quantities of Utility Work items shall be subject to the Sliding Scale for Extra Utility Work and Bid Item Quantity Overruns.

6.15.2.2 Extra Utility Work In General.

(a) Agree To Cooperate. At all times, the Utilities acknowledge and understand the City's desire to complete the Public Work on schedule, and all parties agree to cooperate with and work with each other to resolve any extra Utility Work issues that may arise in the field.

(b) No Admission. Nothing herein shall be construed to be an admission, acknowledgment or statement that the performance of any Utility Work or any extra Utility Work caused any delay to Public Work or resulted in any additional cost or expenses relating thereto.

(c) Disputes Review Board (DRB). In recognition of the usefulness of a process of alternative dispute resolution for its efficiency, speed and cost-effectiveness in managing conflict and settling Disputes that may arise under, or by virtue of, the provisions of Articles 6.13.2, 6.15.2.3, 6.15.2.4, or other Extra Work provisions of this Agreement, the City Contractor and Utilities shall resolve such Disputes in accordance with this Agreement and Appendix "C" herein.

6.15.2.3 If The Utility Determines That There Is No Extra Work Or That The Utility Work Is Covered By The Bid Schedule. If the Utility determines that the alleged extra Utility Work is part of the City's contract documents and denies the City Contractor's claim or request for a change order, then after receiving the Utility's written response, the City Contractor shall either accept the Utility's determination or immediately seek to have the issue resolved through the dispute resolution process, as set forth herein and in Appendix "C". The parties agree to follow the steps described in Articles 6.13.2.1, 6.13.2.2. and 6.13.2.3, and Appendix "C".

6.15.2.4 If The Utility Determines That There Is Extra Work For Which There Are No Items In The Bid Schedule. If the Utility determines that there is extra Utility Work for which there are no items in the Bid Schedule, then the Utility and City Contractor shall utilize the Utility Expanded Work Allowance item to negotiate the cost of supporting and protecting, and/or alleviating the impact on the Public and Utility Work caused by the extra Utility Work with each other with the understanding that the performance of all Work shall continue during all negotiations and discussions. If the item is not in the Bid Schedule but is on the current JB Price List, the Price List will be used as the basis for negotiations.

If the parties reach an agreement utilizing the Utility Expanded Work Allowance on cost for the extra Utility Work, then the City Contractor and the Utility shall submit a copy to the City's RE with the agreed upon prices, along with all supporting documentation, and the City Contractor shall be paid by requisitions submitted in accordance with the agreed upon prices.

If the parties do not reach an agreement on cost for the extra Utility Work within ten (10) Business Days from the start of negotiations via the Utility Expanded Work Allowance, then parties will resolve the dispute through the DRB process, as set forth in Appendix "C".
During the DRB process, the Utilities agree that the extra Utility Work will be performed and paid for on a time and material basis until the DDC's Determination is rendered, and if the DDC's Determination calls for time and material payment, as set forth in Article 26 of the City's Standard Construction Contract, except as modified:

a) Instead of the markup rates specified in Sections 26.2.11 and 26.2.12, a combined 27% will be used for overhead and profit;
b) Instead of the markup rate specified in Section 26.5 on Subcontractor work, 10% will be used for overhead and profit;.
c) Profit (included in the combined 27% above) will be allowed on Payroll Taxes and for the premium portion of overtime pay, instead of being excluded per Section 26.2.12;
d) Holiday pay for persons at sites included in this contract, who are eligible to receive holiday pay (under the applicable Prevailing Wage Schedules) will be paid as follows: the City will pay a portion of the holiday pay equal to the total number of non-overtime hours worked during the holiday week divided by the total number of non-overtime hours contained within that holiday week, excluding the holiday work hours; and, the remaining portion of the holiday pay must be made by the Contractor as part of the Contractor's overhead cost. For purposes of payment only, the workweek will be considered to end on Sunday at 11:59PM and to begin on the Monday thereafter.

Notwithstanding, if the Utility and the City Contractor can agree on an alternative method for interim payment for the Utility Work during the DRB process, then that method may be applied by the Utility, with notice to the City.

6.15.2.5 Approval of Unanticipated Utility Work The Utilities acknowledge and understand the City's desire to complete all Joint Bid Projects on schedule and, agree to cooperate and work with the City and the City Contractor to resolve any unanticipated Utility Work that may arise during construction. The Utilities further agree that its Pre-engineering will include all anticipated Utility Work. To the extent that Utility Work is not specified in its Pre-engineering document, the method or performing Utility Work will be subject to the approval of the Utility involved, noting that the Utility is not responsible for selecting the Contractor's means and methods. The City Contractor shall immediately notify the City and Utilities of an unplanned Utility Work issue. The Utility shall have no more than five (5) business days (or as approved by the City's RE) upon receipt of the City Contractor notice to define the scope of work (including Lay Outs) of the unanticipated Utility Work. Failure of the Utility to provide the required information may result in assessment of Liquidated Damages by the City per Article 8.5. Notwithstanding the foregoing, the City may reasonably object to a method approved by the Utility if it impacts on a City Facility.

6.15.2.6 Changes In The Public Work After Pre-engineering That Results In Utility Work Or Extra Utility Work. During the performance of the Joint Bid Project, conditions may arise in which DDC determines that the Public Work shown on the City's contract plans and documents must be modified. In the event that occurs, the City's RE will notify in writing the Utilities' Project Manager of the determination to order a change.

6.16 Specialty Utility Work Performed By Utilities. The City's contract documents will provide that a Utility may use Specialty Contractors for certain Specialty Utility Work. The City Contractor will remain responsible for the Shared Work, paid for under the Shared Work items, including access to facilities outside the immediate work area. The City Contractor shall not impede the Utility's forces or Specialty Contractor's site access or work.

6.16.1 General. If unanticipated conditions arise on a Joint Bid Project requiring Specialty Utility Work, the City may direct the Utility to perform work itself. Since **Time is of the Essence**, the parties agree to discuss the method that will best preserve the City's schedule for completing the Joint Bid Project. If the City directs the Utility to perform the Specialty Utility Work, then the Utility shall have two (2) business days to decide whether it will perform such work itself, provide a Specialty Contractor to perform the work, or authorize the City Contractor using a Utility-approved subcontractor (if the City Contractor option is used, then the Utility shall receive all bills directly and make all payments directly to the City Contractor) to perform the work. After the Utility has made its decision and notified the City, the Utility shall have an additional two (2) business days to mobilize and commence work, or if more time is needed, to specify a reasonable timeframe, subject to approval by the City.

6.16.2 The Site and Insurance. The City will make the Joint Bid Project site available for a reasonable period of time so that the Specialty Work may be completed. The Utilities are responsible for furnishing to the City and the City Contractor a copy of all certificates of insurance as evidence of such insurance coverage in which the City and the City Contractor are Named insureds, or such other documentation if the Utility does not utilize an insurance company.

6.16.3 Failure To Commence The Specialty Utility Work.

1. For Pre-engineered Specialty Utility Work: If the Utility does not mobilize and commence this Specialty Utility Work in accordance with the current approved schedule, then the City may take whatever action it deems necessary to complete the Public Work, including assessment of Liquidated Damages per Article 8.5.
2. For unanticipated Specialty Utility Work: After notifying the City of what action and when the Specialty Utility Work will commence per Section 6.16.1, if the Utility does not mobilize and commence this Specialty Utility Work within two (2) business days after the start date provided in such notification, then the City may take whatever action it deems necessary to complete the Public Work, including assessment of Liquidated Damages per Article 8.5.

6.17 Disputes Involving the City.

6.17.1 General. At all times, the Utilities acknowledge and understand the City's desire to complete the Public Work on schedule, and agree to cooperate with and work with the City and the City Contractor. In addition to the daily reconciliation of work performed and monthly meetings between DDC and the Utilities, in which the parties agree to appoint representatives with the authority to act for and on behalf of such party on all matters within the terms of this Agreement and the Joint Bid Project contract documents, there may be occasions where the parties cannot agree on the means and methods of performing some part of the work that has not been contemplated in the contract documents that were put out for bid by the City and awarded to the City Contractor.

6.17.2 Monthly Meetings. If the City RE and the Project Manager cannot agree on an issue, then the issue will be submitted to the agenda for the monthly meeting. At the monthly meeting, the parties shall bring the appropriate field representatives and documentation in support of their position. The parties agree to cooperate and work together on resolving the issue. If an extra meeting is needed, the parties agree to schedule a meeting before the next monthly meeting to consider the sole issue unresolved at the last monthly meeting. The parties agree to bring all the appropriate documentation and representatives to this additional meeting.

6.17.3 Higher Authority. If the representatives at the monthly meeting cannot resolve the issue, the parties agree to elevate the issue to the Commissioner and a representative at the Utility that is equal in authority as the Commissioner. The parties agree that the City will bring the following representatives: the Deputy Commissioner of Infrastructure, the City RE and one (1) other individual, not of counsel; and the Utilities will bring the following representatives: a representative equal to the Deputy Commissioner, the Project Manager and one (1) other individual, not of counsel. At the meeting, the parties will present their positions and supporting documentation to the Commissioner and the Utility representative equal to the Commissioner, and they will render a final decision.

6.17.4 City Contractor's Dispute Of Any Decision Under this Article. After the City and the Utilities agree on any issue described above at any stage of a dispute, the City Contractor may object to the decision and file a claim pursuant to the City's Standard Construction Contract and PPB Rules. This is known as the contract dispute resolution board process. The Utility and the City agree to jointly defend the claim throughout all stages of the dispute. The Utility and the City will be responsible for their own legal fees and costs in defending against this dispute. The Utility and the City will be responsible based on a pro rata share of their respective work for any judgments issued during the dispute.

6.18 Lump Sum Conversions.

6.18.1 Lump Sum Conversions Based on Bid Prices. The Contractor may request to convert all or a portion of a Utility's Work into a lump sum conversion for purposes of tracking and payment (Optional Lump Sum Conversions). The Optional Lump Sum Conversions will not be greater than the amount bid for the pre-engineered work.

6.18.2 Lump Sum Conversions Based on the Bid Price Not Less Than Amounts. This section covers Utility work where the item has a Price Not Less Than value (PNL) in the Bid Schedule. The Contractor has the option to convert all of a Utility's Work with a PNL into a lump sum conversion for purposes of tracking and payment, and the lump sum conversion is binding on the Utility (Mandatory Lump Sum Conversions). The amount per item for the Mandatory Lump Sum Conversions will be calculated using the quantity of pre-engineered work and the PNL in the Bid Schedule.

If a Mandatory Lum Sum Conversion is utilized for a Utility's PNL scope, the Contractor may request an Optional Lump Sum Conversion for the remainder of a Utility's scope without a PNL, per Article 6.18.1 above.

6.18.2.1 Execution of Mandatory Lump Sum Conversions

a. The Mandatory Lump Sum Conversions cannot include the JB 450 support items. If during the execution of Work in a Mandatory Lump Sum Conversion, JB 450 support items are utilized, they will be paid separately, via unit price, at the PNL price instead of the bid price.
b. If during the execution of a Mandatory Lump Sum Conversions agreement there is a reduction of Utility Capital Work, the savings resulting from such reduction will be divided evenly (50%/50%) between the Contractor and the Utility. The Utility reserves the right to refuse reductions in Utility Capital Work and to have the pre-engineered Utility Capital Work performed, subject to approval by the Engineer.
c. Noting that Time is of the Essence, if the Contractor makes means and methods changes that expedite the interference work in a lump sum conversion, there will be no changes to measurement or payment of the work contained within the lump sum item, even if these changes result in modifications to the scope or quantity of pre-engineered interference work.

6.18.3 Common Requirements for all Lump Sum Conversions.

a. The Contractor and the Utility must negotiate in good faith to determine the lump sum conversion scope and payment terms. Lump sum conversions specifically exclude the Utility Expanded Work Allowance.
b. If a lump sum conversion is utilized, the Contractor and the Utility must notify the City and provide the agreed upon terms for how the lump sum will be paid out of the City Contract. These terms must be made available to all of the Utilities. The terms of this Agreement for changes and Extra Work affecting a lump sum will apply.
c. A lump sum negotiated with one Utility cannot negatively impact the other Utilities not participating in a lump sum negotiation.
d. A lump sum conversion should not be based on implementing accommodations that were previously denied by the City. During negotiations of a lump sum conversion, the Utility must disclose all accommodations that were previously denied by the City.
e. Lump sum conversion requests must be made and agreed to prior to the Contract's Notice to Proceed (NTP) date.
f. If an Optional Lump Sum Conversion cannot be agreed to, work will proceed under the unit items.

6.19 Quality of Work

6.19.1. Unless otherwise expressly provided, in the Contract Drawings, Specifications, and Addenda, the Utility Work shall be performed in accordance with the best modern practice, utilizing, unless otherwise specified in writing, new and unused materials of standard first grade quality and workmanship and design of the highest quality, to the satisfaction of the Utility. The Contractor shall comply with all Laws applicable to this Contract and to the Utility Work to be done hereunder.

6.19.2. Unless otherwise expressly provided in the Utility's Contract Drawings, Specifications, and Addenda, the Means and Methods of Construction shall be such as the Contractor may choose; subject, however, to the Utility's right to reject the Means and Methods of Construction proposed by the Contractor which in the opinion of the Utility:

(a) Will constitute or create a hazard to the Work, or to persons or property; or
(b) Will not produce finished Work in accordance with the terms of the Contract; or
(c) Will be detrimental to the overall progress of the Project.

The Utility's approval of the Contractor's Means and Methods of Construction, or the Utility's failure to exercise the Utility's right to reject such means or methods, shall not relieve the Contractor of its obligation to complete the Utility Work as provided in this Contract; nor shall the exercise of such right to reject create a cause of action for damages.

6.20 Downtime. If a work crew of the Contractor is caused to completely stop work at a currently mobilized location on the Project, that it can demonstrate is due solely to an act or omission of the Utility ("Downtime"), the Contractor shall be entitled to additional compensation, provided that the Contractor can reasonably demonstrate the following:

A. Contractor reasonably has no other Work it can perform at the currently mobilized location with the applicable work crew or parts thereof.
B. Contractor reasonably cannot mobilize to a different location on the Project with the applicable work crew or parts thereof.

Together, (A) and (B) above are referred to herein as ("Mitigation Work"). In order for the Contractor to perform Mitigation Work, the Mitigation Work must be (i) ready and available for applicable work crews or parts thereof, (ii) marked-out for Utilities, except if there is work that can be safely performed without mark-outs, (iii) compatible with the trades comprising the applicable work crew or parts thereof, and (iv) the material and equipment required for the Mitigation Work must be available. All cost and expenses associated with the Contractor's mitigation efforts shall be compensated under the Expanded Work Allowance item.

In no event will Contractor be entitled to reimbursement for Downtime or other delay(s) if the Downtime is neither material nor due to the sole act or omission of the Utility.

6.20.1 When compensation is permitted under this provision 6.20, Contractor shall be entitled to recover the following costs actually and necessarily incurred in the performance (or delay) of the Utility Work:

A. Direct labor, including payroll taxes (subject to statutory wage caps) and supplemental benefits, based on time and material records and certified payroll records;
B. Necessary materials, based on time and material records and receipts/invoices for such materials; and
C. Reasonable rental value of necessary plant and equipment other than small tools, plus fuel/energy costs according to the applicable formula set forth in the City's Standard Construction Contract Articles 26.2.4 and/or 26.2.8 based on time and material records and receipts/invoices for such plant/equipment;
D. Overhead and profit, based on the method set forth in Article 6.15.2.4 above.

For payment purposes only, the Contractor shall be entitled to invoice for its costs associated with Downtime (excluding any costs associated with its duty to mitigate, as detailed below) under the Expanded Work Allowance pay item.

6.20.2 Planned Work Stoppage. In the event the Contractor receives at least two (2) days advance written notice from a Utility regarding a planned work stoppage (exceeding one (1) day of Downtime) ("Planned Stoppage"), at the request of the Contractor, the City, or the applicable Utility, a meeting shall promptly take place with all parties to discuss what mitigation efforts, if any, are available to the Contractor. The parties shall mutually agree upon the mitigation efforts to be utilized by the Contractor in relation to a Planned Stoppage. In the event mutual agreement cannot be reached, the City shall direct the Contractor as to what, if any, mitigation efforts it must undertake.

6.20.3 Duty to Mitigate. Contractor must act promptly and use reasonable and diligent efforts in accordance with industry practice to mitigate any delay, Downtime, and any other adverse impact of any event that is subject to Articles 6.14.2 and 6.20, including by re-sequencing, reallocating, or redeploying its forces to other portions of the Work.

ARTICLE 7

INSURANCE, LIABILITY, AND INDEMNIFICATION

7.1 General. It is understood that all Utility personnel assigned to perform work under this Agreement on a Joint Bid Project by the Utilities are deemed to be employees, subconsultants or subcontractors of the Utilities and not the City.

7.1.1 Third Party Utility Work. The parties recognize that, notwithstanding the provisions of this Agreement, the existing division of liabilities to third parties shall remain the same as between the City and the Utilities. Therefore, it is understood that for purposes of any liability to third parties arising solely from the Utility Work, the City Contractor, when performing Utility Work, shall be deemed the independent contractor of the respective Utility for which the Utility Work is being performed at that time, and not a contractor of the City. In addition, it is further understood that when the City Contractor is performing Public Work, then the City Contractor is deemed the independent contractor of the City, and not a contractor of the Utilities.

7.1.2 Third Party Interference Work. The City contract documents will provide that for the purposes of third party liability, the City Contractor, when solely supporting and protecting Utility Facilities affected by Public Work, shall be deemed an independent contractor of the respective Utility for which the Utility Work is being performed, and not a contractor of the City.

7.2 Insurance Requirements. The City contract documents will provide, among other things, the following:

7.2.1 The Utilities shall be included as additional insured parties on all insurance policies.

7.2.2 The City Contractor shall furnish copies of insurance certificates to the Utilities, as well as to the City.

7.3 Specialty Contractors' Insurance Requirements. If there is Specialty Utility Work requiring Specialty Contractors, then the Utilities shall provide in its contracts with the Specialty Contractors the following:

7.3.1. Must name the City and the City Contractor as a Named insureds on all insurance policies required to be purchased and maintained by the Utilities;

7.3.2. If there is an incremental cost for such additional insurance, such cost shall be the responsibility of the Utilities and not the City or the City Contractor; and

7.3.3. The Specialty Contractors shall indemnify and hold harmless the City and City Contractors from matters arising from or related to the performance of Specialty Utility Work to the same extent that the Utilities are indemnified.

7.4 Indemnification. The City Contractor and the Utility(ies) will discuss and agree to indemnification terms, provisions, and details on a project-by-project basis.

ARTICLE 8

SERVICES FOR WHICH UTILITIES AGREE TO PAY

8.1 General. On Joint Bid Projects, the Utilities agree to pay the City for certain costs incurred by the City on a Joint Bid Project. Each Utility will be responsible for their respective portions of the following: the City's REI services, force accounts, and Shared Items, as described in Article 5. If for whatever reason, the City determines not to retain the services of an REI firm and will use in-house personnel, then the Utilities are responsible for providing their own personnel or retaining the services of an REI firm for the Utility Work and are responsible for performing all required services and paperwork, as required by the City, for the Utility Work. If the City determines to retain the services of

an REI firm for which the Utilities share the costs, then the Utilities shall, at their option, be able to utilize the services of the REI firm for their engineering needs for the Project.

8.2 REI. On Joint Bid Projects, DDC will provide REI services for the term of the Joint Bid Project. The City reserves the right to use City personnel, consultants or some combination thereof for such REI services. The Utilities agree to pay to the City a portion of the costs for the REI Services as described below.

8.2.1 The cost of the REI services will be determined prior to the Notice To Proceed date of the Joint Bid Project and will be calculated based on the fully burdened labor costs (direct + overhead + fee) for the REI.

8.2.2 Each Utility's prorated portion or the REI costs will be calculated by dividing the total cost for its Utility Work by the total construction cost for the Joint Bid Project.

8.3 Force Accounts. On Joint Bid Projects, there may be force account costs from railroads and transit agencies. Each Utility's prorated portion of the force account costs will be calculated by dividing the total cost for its Utility Work by the total construction cost for the Joint Bid Project

8.4 Shared Items. On Joint Bid Projects, there are certain Shared Items. The pro-rated Utility portion of the Shared Item will be initially calculated at the time of the bid received by the City. Upon completion of the Joint Bid Project, after final City Contractor costs have been determined, the pro-rated shared cost of each Utility will be re-calculated based upon the actual City Contractor costs of each Utility. Based upon the re-calculation there shall be payments made as needed between the Utilities to adjust for the differences between the amounts determined at the time the Joint Bid Project was awarded and the final amount as re-calculated.

8.5 Liquidated Damages. Where the Utility delays project completion, including by failing to provide resources necessary for completion of the work, including but not limited to:

1. Timely determinations,
2. Lay Outs,
3. Identification of unknown Utility Facilities, or
4. Forces to perform Utility Specialty Work (in-house crews or Specialty Contractors),

the City will assess Liquidated Damages (LDs).

8.5.1 LDs assessed on the Utility will be the same amount specified in Schedule A for LDs assessed to the City Contractor.

8.5.2 If a time extension is issued due to the Utility Delay: The City will note on the time extensions issued to the City Contractor when delays are attributable to the Utility.

8.5.3 If the City choses to accelerate the Public Work using the Allowance for City Work Acceleration: The City will copy the Utility on the directive to utilize the Allowance for City Work Acceleration.

8.5.4 In addition to the requirements above, the requirements of Article 15 of the Standard Construction Contract will apply to the Utility for the purposes of Utility LDs, and the requirements of Article 13 of the Standard Construction Contract will apply to the Utility for the purpose of Utility time extensions.

8.5.5 If the City imposes penalties in connection with violations of Administrative Code 24-521, LDs will not be assessed on the same scope of work already covered by those Administrative Code penalties.

8.6 Payments to the City. The Utilities agree to make payments to the City in accordance with the terms and conditions of this Agreement. At substantial completion of a Joint Bid Project, as defined in the City's Standard Construction Contract, the City and the Utilities shall perform a final reconciliation based on actual costs expended for performing Public and Utility Work, including any awards made by the DRB. The purpose of this final reconciliation will be to determine all cost adjustments to be made for total amounts that may have been heretofore disbursed based on estimated or projected costs. Upon concluding this cost review, any additional amounts owed or to be reimbursed by any party shall be promptly refunded and not later than thirty (30) calendar days from the

date the party is notified of such costs. Final reconciliation and final invoices shall be completed and sent to the Utilities within sixty (60) calendar days after substantial completion. Current work shall be invoiced by the City and submitted to the Utilities within sixty (60) calendar days of payment to the Contractor.

8.7 Utility Payments for Utility Work.

8.7.1 General. On Joint Bid Projects, the Utilities agree to pay to the City, in a timely manner, all costs for their respective portions of the Utility Work. Each Utility shall be responsible only for its portion of the Utility Work. The payments to the City will be in based on items and quantities approved by the responsible Utilities.

8.7.2 Utility Payments. Payment by the Utilities to the City will be by ACH (direct deposit) or check (if approved by the DDC CFO) payable to the City of New York, Department of Design and Construction, Director of Finance, or as further provided below. Payments are due net 30 days from invoice by the City.

8.7.2.1 Refund. If a Utility's obligations are determined to be less than the amount paid to the City, then the City shall return the difference to the Utility within thirty (30) calendar days of DDC's approval of payment for substantial completion; or

8.7.2.2 Additional Payment. If a Utility's obligations are determined to exceed the amount advanced by the Utility to the City, then the Utility shall pay such difference to the City within thirty (30) calendar days of DDC's approval of payment for substantial completion.

8.8 Review Of City Contractor Requisitions For Public Work And Shared Items Only. The City will review all requisitions for the Public Work and Shared Items only. The City shall be responsible for paying only the Public Work items requisitioned by the City Contractor. The parties, as described above, shall share the costs of the Shared Items.

8.9 Review Of City Contractor Requisitions For Utility Work Only. The Utilities will review all requisitions for the Utility Work only. The Utility shall be responsible for paying only the Utility Work items requisitioned by the City Contractor. Since **Time is of the Essence,** the parties agree that the Utilities shall perform their review within five (5) calendar days upon receipt of the payment requisition and shall immediately notify the City to issue such payments to the City Contractor for the amounts approved by the Utilities for quantities of Utility Work performed. The Utilities agree to copy the City on all issues that arise with regard to the requisition for the Utility Work. If there are any Disputes, the Utility and City Contractor will handle as described above and in accordance with Appendix "C".

8.10 Payment Satisfies Utility Obligations. Payment by the Utilities in compliance with the terms of this Agreement shall fully satisfy all payment obligations of the Utilities to the City and/or the City Contractor in connection with the Project.

ARTICLE 9

NOTICES

9.1 All notices and correspondence to the parties must be delivered by hand or sent by registered or certified mail or by Federal Express, Express Mail, other overnight mail service that provides a receipt to the sender, or by email with read receipt. Receipt of a notice by the party to whom the notice is transmitted will be considered to have occurred upon receipt, if hand-delivered; three (3) business days from the date of mailing, if mailed; or the next business day after transmittal by Federal Express, Express Mail or other overnight delivery service that provides a receipt to the sender.

9.2 All notices and correspondence to the **City** and **DDC** must be delivered to the following address and addressee or to such other address or addressee as the **City** or **DDC** may notify the parties of from time to time:

New York City Department of Design and Construction
30-30 Thomson Avenue, Long Island City, NY 11101
Attn: Infrastructure Deputy Commissioner

With a copy to:
New York City Department of Design and Construction
30-30 Thomson Avenue, Long Island City, NY 11101
Attn: Infrastructure Borough Assistant Commissioner for Construction

9.3 All notices and correspondence to **Con Edison** must be delivered to the following address and addressee or to such other address or addressee as **Con Edison** may notify the parties of from time to time:

Consolidated Edison of New York Inc.
1610 Matthews Avenue, Bronx, NY 10464
Attn: Cherno Cham, General Manager Construction – Public Improvement

9.4 All notices and correspondence to **Verizon and/or ECS** must be delivered to the following address and addressee or to such other address or addressee as **Verizon and/or ECS** may notify the parties of from time to time:

<u>If to Verizon:</u>
Verizon New York Inc,
230 W. 36th Street, New York, NY 10018
Attn: Sr. Director - Outside Plant

With a copy to:
Empire City Subway Company (Limited)
7 Washington Avenue, 2nd Floor, Lynbrook, NY 11563
Attn: Sr. Director of Operations

<u>If to ECS:</u>
Empire City Subway Company (Limited)
7 Washington Avenue, 2nd Floor, Lynbrook, NY 11563
Attn: Sr. Director of Operations

9.5 All notices and correspondence to **Charter Communications Operating (CCO)** must be delivered to the following address and addressee or to such other address or addressee as **CCO** may notify the parties of from time to time:

Charter Communications Operating, LLC
109-15 14th Ave. 2nd Floor, College Point, New York 11356
Attn: John Piazza, Construction Manager

9.6 All notices and correspondence to **National Grid** must be delivered to the following address and addressee or to such other address or addressee as **NG** may notify the parties of from time to time:

National Grid
287 Maspeth Ave, Brooklyn NY 11211
Attn: Manager CSC

ARTICLE 10

MISCELLANEOUS

10.1 Bid Documents. The City will provide to the Utilities a complete set of the bid documents for each Joint Bid Project including, but not limited to, the documents containing the provisions required by this Agreement to be included in the City Construction Contract as soon as they are available to the City, and, in any event, not later than the date that they are made available to potential bidders. The Utilities must utilize the PASSPort system to download the final bid documents. The Utilities will have the right to view the bids submitted for each Joint Bid Project.

10.2 Audit. The Utilities will have the right to request from the City, to inspect and audit, a copy of the City Contractor's records for the purpose of verifying the bases on which awards of City Construction Contracts are made and the Utility Work performed for which the Utilities are paying hereunder, and other records relating to this Agreement, but only to the extent that the City has the right to inspect and audit such City Contractor records. The City shall have the right to inspect and audit the Utilities' records for the purpose of verifying the estimated quantities that were provided by the Utility during the Pre-engineering phase and all field records produced during the construction of a Joint Bid Project, and any other records relating to the work performed pursuant to this Agreement. The City's right to audit and examination shall include, but not be limited to, audits and examinations by the engineering audit officer of DDC or post-audit by the Comptroller of the City of New York in accordance with all laws, as amended.

10.3 City’s Rights and Obligations with Respect to Utility Work, including Specialty Utility Work. The City agrees to work with, consult, and assist the Utilities with, and, in its reasonable discretion, enforce this Agreement with respect to, any issues that may arise from the Utility Work and Shared Items conducted by the City Contractor(s) in a similar manner and diligence as it does with respect to the City’s Public Work.

10.4 City's Rights Under The Laws. It is understood that nothing in this Agreement shall be interpreted to imply the City's acceptance of any additional liability or responsibility arising from or related to in any way with the performance of Utility Work or Specialty Utility Work. It is further understood that this Agreement does not, and shall not be construed to enlarge, limit or diminish or affect in any way any existing City rights regarding support, protection, relocation, and replacement of the Utilities' Facilities.

10.5 Counterparts. This Agreement may be executed in one or more counterparts which, when taken together, shall constitute one and the same Agreement.

(NO FURTHER TEXT HERE.]

APPENDIX "A"

PRE-ENGINEERING

A.1.01 General. As set forth in Article 3 of the Joint Bid Agreement (the "Agreement"), and except as provided below in this Section A.1.01, the City and each Utility shall engage in pre-engineering of all Joint Bid Projects ("Project(s)" or "Joint Bid Project(s)") covered by the Agreement, including but not limited to, coordinating the preliminary and final design of all Projects covered by this Agreement to efficiently and cost effectively avoid or ameliorate, to the extent practicable, unnecessary disturbances to Utility facilities and to maximize safety and convenience to the public resulting from construction of the Projects. Each Utility must prepare and submit directly to the City, all of the Utilities' pre-engineering documents including Bid Schedules, and submit to DDC a completely coordinated pre-engineered Utility Work document. Notwithstanding the above, the Utilities, pursuant to Article 3.8 of the Agreement, agree that each Utility shall be individually liable and responsible for the respective Utility's obligation and covenants under the Agreement. The pre-engineering required by this Appendix "A" shall be accomplished within a time schedule that enables the City to comply with its annual plan for capital construction awards. Where a Project must be awarded and performed on an emergency basis leaving no time for pre-engineering or where other similar extenuating circumstances require that a Project go forward without first being pre- engineered, the City may unilaterally declare in writing that the pre--engineering described in this Appendix "A" is not to be applied to a given Project. In such a case, the City and the Utilities shall nonetheless include Utility Work in the City construction contract in accordance with this Agreement to the extent that the need for such work can be defined in the absence of pre-engineering.

A.1.02 Cost of Pre-engineering. All costs and expenses incurred by a party in complying with its pre-engineering responsibilities and obligations under this Appendix "A" shall be the sole responsibility of that party. If a Utility or Utilities requests a design change during the pre-engineering phase of the Agreement, then that Utility or Utilities will be responsible for all of the costs and expenses that may be incurred by an outside consultant for such a design change. If there is more than one Utility that is requesting a design change, the Utilities may agree to share the costs of the outside consultant.

A.1.03 Persons To Whom Notices And Information Are To Be Sent. All information and notices required by this Appendix "A" to be sent to the DDC shall be sent to the designated Program Management Director for a particular Project. All information and notices required by this Appendix "A" to be sent to the Utilities shall be sent to each Utility's representative as designated by the Utility. This Notice section is in addition to the Notice section described in Article 9 of the Agreement.

A.1.04 Identification of Joint Bid Projects. Pursuant to Article 3.1 of the Agreement, the City may plan its Public Work with the Utilities. The Agreement and this Appendix "A" will apply to Projects identified by the City and mutually agreed to in writing by the Utilities pursuant to Article 3.2 of the Agreement.

A.1.05 Notice to City that the Utility Agrees to Joint Bid. Pursuant to Article 3.2 of the Agreement, each Utility agrees to send a written notice to the City advising that the City's identified Public Work project may include the Utility Work and be jointly bid by the City as a Joint Bid Project.

A.1.06 Start of Pre-engineering. Each Utility shall be deemed notified of the start of design for each specific Project, upon receiving a written request from the City, which may be done by e-mail, to provide pre- engineering information. Pursuant to Article 3.4 of the Agreement, except for Bid Schedule information, each Utility will provide the City with the pertinent information available to the Utility(s) with regard to each specific Joint Bid Project, confirmed by a field inspection when specifically requested, concerning the location and type of the Utility's facilities within the physical boundaries of such Joint Bid Project. All such requests shall specifically identify the Joint Bid Project number assigned in the most recent annual capital construction plan, or any new entries thereto, as identified. Each Utility shall provide the requested information, including the results of a field inspection (including test pits) when requested, within 30 calendar days of the request for such information. However, any Utility may request a reasonable time extension if necessary to provide this information, which request the City shall not unreasonably deny. Whenever the request for such information identifies the specific location within the street in which the City

Work will occur, the Utility shall, at the same time that it provides other requested information, indicate where such work will or may cause relocation or replacement of the Utility's facilities.

A.1.07 Pre-Engineering Coordination. The City and the Utilities (with both of their consultants), shall, in a timely manner:

1) Exchange information, including design drawings,
2) Discuss technical aspects of the Project and all City Work and Utility Work involved therein, and shall, among other things,
3) Establish a least cost alternative or other alternatives, establish the amount to be paid, or the method for determining the amount to be paid, as applicable, for City Accommodations, if any, establish the separate engineer's estimates for City Work and for each Utility's Work, and
4) Discuss the proposed scope of work, time frames (including construction contract duration) and project limits.

The "least cost alternative" is an alternative or variant of the planned City Work, which alternative/variant attains the goals of the planned work at the lowest possible cost to the City and the Utilities. The "Engineer's Estimate" is equal to the sum of the product of (1) the prices for each unit of work, which, prior to solicitation of bids, the City and the Utilities have each submitted in their respective Bid Schedules and (2) the estimated quantity for each respective unit of work, which, prior to solicitation of bids, the City and the Utilities agree represent the reasonably anticipated amount of work under all of the circumstances, plus, as applicable, the price for City Accommodations to the extent that such accommodations are not bid upon by the City Contractor.

A.1.08 Meetings During Design Phases of Project. The City, through its appropriate agencies, and the Utilities shall meet as required to review, comment upon and consider changes to the design of the Project. At least 30 calendar days prior to the first such meeting, the City shall provide the Utilities with a copy of its preliminary design, and, if necessary, make available a copy of the City's survey information. At such time, the City shall also provide the Utilities with a copy of such subsurface information that it may obtain in conjunction with its design work. During such meeting or meetings, the Utilities may present their least-cost alternative or other alternatives for the Project at issue. If the least-cost alternative involves City Accommodations that result in increased cost to the City, then City, after consultation with the Utilities, shall establish the amount to be paid or the method for determining the amount to be paid, as applicable, for the City Accommodations. The affected Utilities shall, within 10 calendar days of receiving the City's determination of the amount to be paid or the method for determining the amount to be paid, as applicable, for City Accommodations, advise the City in writing of its acceptance or rejection of the City Accommodations and the City's determination concerning the amount to be paid or the method for determining the amount to be paid, as applicable, for same. Based on the meetings among the City and the Utilities as specified herein, the City may modify the City's design, including, as applicable to the Project, lanes for facilities, curb alignments, construction methods, the start of construction, changing Project duration, making provisions for Utility access to the site, and specifying the sequencing of work. If subsequent to when the City establishes the final alignment, the City makes changes to the alignment or scope of the Project that have a significant or material impact on the Utilities' pre-engineering, the Utility must immediately notify the City and further meetings concerning pre-engineering shall be held as necessary.

A.1.09 Description of Interference Work and Specifications To Be Provided By The Utilities. Upon written request by the City each Utility shall provide the City a written description in the format required by the City (the “JB Package”) of all anticipated relocation or replacement and support and protection of the Utility's Facilities to be performed in conjunction with the Joint Bid Project; the name of the parties to perform such identified work (i.e. City Contractor, Utility employees, Utility contractors, etc.). and other information deemed by the City to be necessary to plan and perform its work. The JB Package must include:

1) Details of all test pits performed,
2) Details (Lay Outs) of all point of entry (POE) data for utility structures affected by the Interference Work,

3) Overhead wiring Lay Outs, with all necessary requirements and clearances for executing the City work in the vicinity of overhead wires including but not limited to:
    a. Required protection for overhead wires,
    b. Required manipulation and adjustment of overhead wires,
    c. Descriptions of the Utility's planned pole and overhead wire relocation (temporary and permanent) to accommodate the Contractor's equipment, including pile rigs,
4) For Utility Capital gas work, details of work. This work must be performed by a Utility Specialty Contractor, not the City Contractor, and
5) All other details, drawings, sketches, and specifications necessary to execute the Interference Work.

While the use of "as ordered by the Engineer" scope and scope without known locations is necessary from time to time, it's use must be minimized and cannot be considered a replacement for field investigations and Pre-Engineering. The Utility must plan its Pre-Engineering to ensure that all backfill and final paving within the City contract are done by the City Contractor, and that the bid items are structured appropriately. In general, the City will provide a time frame for when the above-requested information must be given to the City. Notwithstanding the City's stated time frame, if a Utility requests additional time or a reasonable time period that is longer than the City's time period, the City's approval will not be unreasonably withheld. The parties understand that the Utilities will use their best efforts to comply with the City's time period since **Time Is Of The Essence** with regard to the Joint Bid Projects.

A.1.10 Review and Acceptance of Company Materials. Following the City's receipt of the information, documents and materials described in Section A.1.09 of this Appendix "A", the City shall review said information, documents and material and discuss suggested modifications thereto with the Utilities involved. The City's review must include minimizing the use of scope without known locations. It is understood and agreed that the method of performing Utility Work shall be subject to the approval of the Utility involved, which approval shall not be unreasonably withheld or delayed. Utility packages that are not coordinated with the other Work or have unreasonable quantities or scopes will be returned to the Utility for revision, with no extension of time allowed.

A.1.11 Completion of Pre-engineering. After review of the Utilities' information documents and materials, the City shall, within 30 calendar days of submission of the information, documents and materials required in this Appendix "A", provide written notification to the Utilities of its agreement to, or modification of such information, documents and materials for the Joint Bid Project. City's approval for Utility pre-engineering accommodations will not be unreasonably withheld or delayed.

A.1.12 Start of Advertising. The Utilities shall be notified of the date a Project is put out to bid by virtue of the bid date for the Project being published by the City in the "City Record" and in the PASSPort procurement system.

A.1.13 Notice of Award. The City shall give notice to the Utilities of its determination of the apparent lowest bidder at the same time that the City notifies the City Contractor. Such notice may take the form of a copy of the City's notice of award given to the City Contractor.

A.1.14 Start of City Construction. The City shall give notice to the Utilities of the date of commencement of construction at the same time that the City orders the City Contractor to begin work. Such notice may take the form of a copy of the City's order to commence work given to the City Contractor.

A.1.15 Start of Utilities' Construction. Whenever a Utility undertakes relocation or replacement and support and protection of its facilities in relation to a Project, and such field work is begun prior to the City's order to its employees, the City Contractor or personnel to commence construction of City Work, the Utility shall give notice to the City that it will undertake field work at least 10 calendar days prior to undertaking such field work**.** Said notice shall, at a minimum, identify the expected duration of such fieldwork, and the name, address and phone number of the persons to contact at the Utility or at the offices of the Utility' s outside contractor who shall coordinate such work with the City. Within a reasonable time after receipt of such notice by the City, the City shall provide the Utility with the name, address and phone number of the person to contact at the City who shall be responsible for Project coordination, which will include ensuring that the Utility's construction does not delay start of the City work. If the Utility's construction will delay the City work, then the Interference Work must be part of the Pre-Engineering and included in the City contract.

[NO FURTHER TEXT HERE.]

APPENDIX "B"

The City of New York City Department of Design and Construction
STANDARD TERMS and CONDITIONS

B.1. Unlawful provisions deemed stricken from Agreement - Severability. If this Agreement contains any unlawful provision not an essential part of the Agreement and which shall not appear to have been a controlling or material inducement to the making thereof, the same shall be deemed of no effect and shall, upon notice by either party, be deemed stricken from the Agreement without affecting the binding force of the remainder.

B.2. All legal provisions deemed included. It is the intent and understanding of the parties to this Agreement that each and every provision of law required to be inserted in this Agreement shall and is inserted herein, and if, through mistake or otherwise, any such provision is not inserted, or is not inserted in correct form, then this Agreement shall forthwith upon the application of either party be amended by such insertion so as to comply strictly with the law and without prejudice to the rights of either party hereunder.

B.3. Captions and Headings not binding. Article, Section and Chapter headings are inserted for convenience only and are not to be considered in the construction or interpretation of any provision hereof.

B.4. All prior written or oral agreements excluded. The written agreement contains all the terms and conditions agreed upon by the parties hereto, and no other agreement, oral or otherwise, regarding the subject matter of this agreement shall be deemed to exist or to bind any of the parties hereto, or to vary any of the terms contained herein.

B.5. Construction and Interpretation of Agreement. The language in all parts of this Agreement shall in all cases be construed simply, as a whole, and in accordance with its fair meaning and not strictly for or against any party. The parties hereto acknowledge and agree that this Agreement has been prepared jointly by the parties and has been the subject of arm's length and careful negotiation and that each party has been given the opportunity to independently review this Agreement with legal counsel. Accordingly, in the event of an ambiguity and/or any controversy, dispute or contest over the meaning, interpretation, validity or enforceability of this Agreement, or any of its terms or conditions, there shall be no inference, presumption or conclusion drawn whatsoever against any party.

B.6. Amendments. This Agreement may not be amended except by an instrument in writing signed by all parties. In the event the parties duly execute any amendment to this Agreement, the terms of such amendment shall supersede the terms of this Agreement to the extent of any inconsistency.

B.7, Failure To Exercise Rights. The failure by either party to exercise in any respect any right provided for herein will not be deemed a waiver of any rights hereunder.

B.8. Investigations. The parties to this Agreement agree to cooperate fully and faithfully with any investigation, audit or inquiry conducted by a State of New York (State) or City of New York (City) governmental agency or authority that is empowered directly or by designation to compel the attendance of witnesses and to examine witnesses under oath, or conducted by the Inspector General or a governmental agency that is a party in interest to the transaction, submitted bid, submitted proposal, contract, lease, permit or license that is the subject of the investigation, audit or inquiry.

B.8.1 If any person who has been advised that his or her statement, and any information from such statement, will not be used against him or her in any subsequent criminal proceeding refuses to testify before a grand jury or other governmental agency or authority empowered directly or by designation to compel the attendance of witnesses and to examine witnesses under oath concerning the award of or performance under any transaction, agreement, lease, permit, contract, or license entered into with the City, the State, or any political subdivision or public authority thereof, or the Port Authority of New York and New Jersey, or any local development corporation within the City, or any public benefit corporation organized under the laws of the Slate of New York, or;

B.8.2 If any person refuses to testify for a reason other than the assertion of his or her privilege against self incrimination in an investigation, audit or inquiry conducted by a City or Slate governmental agency or authority empowered directly or by designation to compel the attendance of witnesses and to take testimony under oath, or by the Inspector General of the governmental agency that is a party in interest in, and is seeking testimony concerning the award of, or performance under, any transaction, agreement, lease permit, contract, or license entered into with the City, the State, or any political subdivision thereof or any local development corporation within the City then;

B.8.3 The Commissioner or agency head whose agency is a party in interest to the transaction, submitted bid, submitted proposal, contract, lease, permit, or license shall convene a hearing, upon no less than five (5) days written notice to the parties involved to determine if any penalties should attach for the failure of a person to testify.

B.8.4 If any non-governmental party to the hearing requests an adjournment, the commissioner or agency head who convened the hearing may, upon granting the adjournment, suspend any contract, lease, permit, or license pending the final determination pursuant to this Article 8 without the City incurring any penalty or damages for delay or otherwise.

B.8.5 The penalties which may attach a final determination by the commissioner or agency head may include but shall not exceed:

B.8.6 The disqualification for a period not to exceed five (5) years from the date of an adverse determination for any person, or any entity of which such person was a member at the time the testimony was sought, from submitting bids for, or transacting business with, or entering into or obtaining any contract, lease, permit or license with or from the City; and/or

B.8.7 The cancellation or termination of any and all such existing City contracts, leases, permits or licenses that the refusal to testify concerns and that have not been assigned as permitted under this agreement, nor the proceeds of which pledged, to an unaffiliated and unrelated institutional lender for fair value prior to the issuance of the notice scheduling the hearing, without the City incurring any penalty or damages on account of such cancellation or termination; monies lawfully due for goods delivered, work done, rentals, or fees accrued prior to the cancellation or termination shall be paid by the City.

B.8.8 The Commissioner or agency head shall consider and address in reaching his or her determination and in assessing an appropriate penalty the factors discussed in this Article 8. He or she may also consider, if relevant and appropriate, the criteria established in this Article 8 In addition to any other information, which may be relevant and appropriate;

B.8.9 The party's good faith endeavors or lack thereof to cooperate fully and faithfully with any governmental investigation or audit, including but not limited to the discipline, discharge, or disassociation of any person failing to testify, the production of accurate and complete books and records, and the forthcoming testimony of all other members, agents, assignees or fiduciaries whose testimony is sought.

B.8.10 The relationship of the person who refused to testify to any entity that is a party to the hearing, including, but not limited to, whether the person whose testimony is sought has an ownership interest in the entity and/or the degree of authority and responsibility the person has within the entity.

B.8.11 The nexus of the testimony sought to the subject entity and its contracts, leases, permits or licenses with the City.

B.8.12 The effect a penalty may have on an unaffiliated and unrelated party or entity that has a significant interest in an entity subject to penalties under this Agreement, provided that the party or entity has given actual notice to the commissioner or agency head upon the acquisition of the interest, or at the hearing called for in this Article 8 gives notice and proves that such interest was previously acquired. Under either circumstance the party or entity must present evidence at the hearing demonstrating the potential adverse impact a penalty will have on such person or entity.

B.8.13 Article 8 Definitions only:

B.8.13.1 The term "license" or "permit" as used in Article 8 only is defined as a license, permit, franchise or concession not granted as a matter of right.

B.8.13.2 The term "person" as used in Article 8 only is defined as any natural person doing business alone or associated with another person or entity as a partner, director, officer, principal or employee.

B.8.13.3 The term "entity" as used in Article 8 only is defined as any firm, partnership, corporation, association, or person that receives monies, benefits, licenses, leases, or permits from *or* through the City or otherwise transacts business with the City.

B.8.13.4 The term "member" as used in Article 8 only is defined as any person associated with another person or entity as a partner, director. officer, principal or employee.

B.8.14 In addition to, and notwithstanding any other provision of this Agreement, the DDC Commissioner may in his or her sole discretion terminate this Agreement upon not less than three (3) days written notice in the event the Companies fail to promptly report in writing to the New York City Commissioner of Department of Investigation of the City of New York any solicitation of money, goods, requests for future employment or other benefit or thing of value, by or on behalf of any employee of the City or other person, firm corporation or entity for any purpose which may be related to the procurement or obtaining of this Agreement by the consultant, or affecting the performance of this Agreement.

B.9. Termination of Agreement. Any rights, obligations and remedies of either party arising out of or in connection with any event or condition that occurs during the term of this Agreement shall survive any termination of this Agreement by the parties. It is understood that either party may terminate this Agreement with at least thirty (30) calendar days' prior written notice to the other party. If either party terminates this Agreement, then the terms and conditions of this Agreement shall survive for any Joint Bid Project already agreed upon by the parties.

B.10. Choice of law, consent to jurisdiction and venue. This Agreement shall be deemed to be executed in the City of New York, State of New York, regardless of the domicile of the Companies, and shall be governed by and construed in accordance with the laws of the State of New York.

B.10.1 The parties agree that any and all claims asserted by or against the City arising under this Agreement or related thereto shall be heard and determined either in the courts of the United States located in New York City **("Federal Courts")** or in the courts of the State of New York **("New York State Courts")** located in the City and County of New York. To effect this Agreement and intent, the parties agree:

B.10.2 If the City initiates any action against the Vendor or other party to this Agreement in Federal Court or in New York State Court, service of process may be made on the Vendor or other party to this Agreement either in person, wherever such Vendor or other party to this Agreement may be found, or by registered mail addressed to the Vendor or other party to this Agreement at its' address as set forth in this Agreement, or to such other address as the Vendor or other party to this Agreement may provide to the City in writing; and

B.10.3 With respect to any action between the parties in New York State Court, the Vendor or other party to this Agreement hereby expressly waive and relinquish any rights it might otherwise have (1) to move to dismiss on grounds of forum non conveniens; (2) to remove to Federal Court, and (3) to move for a change of venue to a New York State Court outside New York County.

B.10.4 With respect to any action between the parties in Federal Court located in New York City, the Vendor or other party to this Agreement expressly waive and relinquish any right it might otherwise have to move to transfer the action to a United States Court outside the City of New York.

B.10.5 If the Vendor or other party to this Agreement commences any action against the City in a court located other than in the City and State of New York, upon request of the City, the Vendor or other party to this Agreement shall either consent to a transfer of the action to a court of competent jurisdiction located in the City and State of New York or, if the court where the action is initially brought will not or cannot transfer the action, the Vendor or other party to this Agreement shall consent to dismiss such action without prejudice and may thereafter reinstitute the action in a court of competent jurisdiction in New York City.

B.11. AFFIRMATION. The undersigned parties to this Agreement affirm and declare that said undersigned is not in arrears to the City or New York upon debt, contract or taxes and is not a defaulter, as surety or otherwise, upon obligation to the City of New York, and has not been declared not responsible, or disqualified, by any agency of the City of New York, nor is there any proceeding pending relating to the responsibility or qualification of Licensor to receive public monies or work performed on their property or building.

[NO FURTHER TEXT HERE.]

Appendix "C"
DISPUTE RESOLUTION PROCEDURE

C.1 General Provisions. All Disputes arising out of, or relating to, the Contract Documents and this Agreement (excluding delay and time-impact claims), that are not otherwise resolved between the Contractor and the Utility(ies) (each, a "Party", and collectively, "Parties"), must be resolved in accordance with this Appendix "C" (the "Dispute Resolution Procedure").

C.2 Disputes to DDC. If the Contractor and the Utility are unable to resolve a Dispute utilizing the Utility Extra Work Allowance procedures, the Contractor and Utility must both present their Dispute to the DDC Borough Director of Construction (or Borough Assistant Commissioner for Construction in the Director's absence) within three (3) business days of disagreeing on the determination or action that is subject to such Dispute. The contents of such Dispute must be of an equivalent level of detail as the Dispute Notification (defined in Part C of this Appendix "C"). DDC will have the broad authority to review the Dispute, request information, and convene a conference between the Parties.

C.2.1 DDC Determination**.** Within three (3) days of receiving the original Dispute submission, DDC will render a written determination (the "**DDC Determination"**). The DDC Determination will provide a decision that contains a method to proceed and a method of payment for the Disputed Work. DDC will act impartially and neutrally in rendering the DDC Determination. The determination will be rendered by the DDC Borough Director of Construction (or Borough Assistant Commissioner for Construction in the Director's absence). All Parties agree to be bound by the DDC Determination and will proceed with the Work accordingly, including methods of payment.

C.3 DRB.

C.3.1 Dispute Statement. If any Party disagrees with the DDC Determination, within three (3) business days of receiving such, that Party must submit a description of its position with respect to the Dispute providing an equivalent level of detail as the Dispute Notification (defined in Part C of this Appendix "C") (the "**Dispute Statement"**) to the DRB for its review and consideration. The DRB will inform the other Party of the disputing Party's Dispute Statement. Within three (3) business days of such notice, the other Party must submit a description of its position providing an equivalent level of detail as the Dispute Notification. Failure of a Party to submit its Dispute Statement within the time period set forth in this clause will:

(a) where that Party is the disputing Party, result in a waiver of its right to submit a Dispute Statement or seek any relief in connection with the Disputes, at the discretion of the DRB; and

(b) result in a waiver of its right to participate in oral arguments in any conference with the DRB with respect to the Dispute at hand, at the discretion of the DRB.

The DDC Determination must be made available to the DRB once the initial Dispute Statement is submitted.

C.3.2 Administrative Procedures. The authority and administrative procedures with respect to constituting the DRB are set forth in Part B of this Appendix "C".

C.3.3 Conference Date. Upon each Party's submission of its respective Dispute Statement to the DRB, the DRB will decide when to conduct the conference; provided, that the DRB must hold the conference within five (5) business days of receipt of both Dispute Statements, unless the Parties mutually agree to a longer time period.

C.3.4 Discovery. All Parties may voluntarily furnish written evidence or documentation to the DRB regarding the applicable Dispute in the time period required by the DRB. If any Party intends to furnish such information to the DRB, it must provide copies of such information to the other Parties reasonably in advance of the scheduled conference date and concurrently with providing it to the DRB. If the DRB requests any additional

documentation or evidence prior to, during, or after the conference, the relevant Party will provide the requested information to the DRB and to the other Parties, in accordance with the deadlines set by the DRB. Failure by the disputing Party to comply with the DRB's request in the time required will result in a waiver of its right to make any claim or seek any relief in connection with the Dispute.

C.3.5 Conference. The Parties will each be afforded a reasonable opportunity to be heard by the DRB and to offer evidence, but in no event will the time for conferences exceed three (3) consecutive days from the notice of conference commencement issued by the DRB, without the consent of all Parties. No Party may present information at the conference that was not previously distributed to the DRB and the other Party. A court-reporter may be requested by any Party for any DRB conference.

C.3.6 Decision. The DRB's recommendation for resolution of the Dispute will be issued in writing to DDC, the Contractor, and the Utility(ies) within five (5) Business Days after completion of the conference. The DRB's recommendation must be made with a majority vote of the Board Members. Such recommendation will provide a solution that resolves the Dispute, including payment and amounts. In cases of substantial complexity, all Parties may agree to allow additional time for the DRB to formulate its recommendations.

C.3.7 Acceptance: Within three (3) business days of receiving the DRB's recommendations, the Parties will respond to each other and to the DRB in writing, signifying either acceptance or rejection of the DRB's recommendations, The failure of any Party to respond within the three-business day period will be deemed an acceptance of the DRB's recommendations by that Party.

(a) The recommendations of the DRB will be final and binding once the Parties accept such recommendations, either expressly or to the extent deemed accepted by virtue of that Party's failure to respond within the three-business day period. If the Parties accept (or are deemed to have accepted) any recommendation of the DRB in accordance with this Appendix "C", each Party must (unless otherwise specified in the relevant recommendation) give effect to such recommendation as soon as is reasonably practicable.

(b) Should the Dispute remain unresolved, any Party within three (3) days of receiving the DRB's recommendation, may seek reconsideration or clarification of the decision by the DRB when , (1) the DRB's ruling is unclear or (2) the DRB's ruling did not determine all issues arising out of the Dispute. The DRB must give such Party a reasonable opportunity to present such new facts, if any, for consideration. Any Party seeking reconsideration must provide written notice to the other Parties as soon as practicable. The DRB will issue a final decision to both Parties within three (3) business days. No requests for reconsideration or clarification will be permitted thereafter.

(c) The DRB's final decision will require compliance by the Parties, even if not accepted.

C.4 Conduct During a Dispute. During any Dispute and throughout the Dispute Resolution Procedures:

(a) the Parties must continue with all Work (including Work that is subject of the Dispute) in a diligent manner and without delay in accordance with (and subject to) all applicable provisions of the Contract Documents and must use reasonable efforts to mitigate any delay to the Project or any losses that may be incurred; and

(b) the Parties must continue to comply with all provisions of the Contract Documents (including payment of any amounts not in dispute that are payable under the Contract Documents).

C.5 Joinder. The DRB may, or at least at the request of any Party to the Dispute, will compel the participation of any of the Subcontractors, other Contractor, or other Utility with a contract related to the Work under this Agreement, and that Subcontractor, other Contractor, or other Utility will be bound by the decision of the DRB, to the extent provided under this Agreement. Any other Contractor or Subcontractor thus brought into the Dispute resolution proceeding will have the same rights and obligations under this Appendix "C" as the Parties.

C.6 Record Keeping.

(a) If the Parties fail to strictly comply with any notice provisions (including timing requirements) or recordkeeping provisions of this Agreement, any claim of such Party with respect to such records or notice will be deemed waived, and the other Party will not have to show prejudice to its interest before such denial is made.

(b) After giving DDC or the DRB notice of a Dispute, the Parties must keep daily records, certified by the respective Party, of all labor, material, and equipment costs and hours and any other losses incurred for the affected portion of the Project, including overhead costs. The daily records must identify each operation and the specific locations where Work is affected and must be provided to DDC for review and signature on a daily basis. Costs that are incurred on a monthly or other periodic basis shall be submitted within one week following the week of receipt of invoices pertaining thereto. On a weekly basis, beginning the week following the date of giving notice of a Dispute, the Party will meet with DDC and present the daily records for the preceding week. If DDC disagrees with the accuracy, applicability, or reasonableness of any portion of the submissions, DDC will promptly notify the appropriate Party to correct its records. If there is a Dispute as to records, the Party must include such Dispute as part of its Dispute Notification and Dispute Statement, as applicable. Lack of compliance with the requirements to hold monthly meetings or present its records will constitute a waiver by the Party of said Dispute for the applicable non-properly documents losses.

C.7 Miscellaneous.

(a) Throughout the process of the DRB's review and decision, the Parties will maintain time and material records.

(b) The DDC, at the request of the DRB, will be available to participate in the DRB's proceedings, as necessary.

(c) Regardless of the DRB's decision, the DDC Determination will govern from the date of the DDC Determination through the date of the DRB's decision.

(d) The Parties will be bound by the DRB's decision from the date of such decision and moving forward, there will be no retroactive effect.

C.8 Venue and Seat. The venue for the DRB will be in New York, New York, at a neutrally designated location, as agreed upon by the DRB.

C.9 Governing Law. The Dispute Resolution Procedure, and the proceedings under this Agreement, will be governed by the laws of the State of New York, without regard to provisions governing conflicts of law principles.

C.10 Judicial Remedies.

(a) **Litigation.** If any Party does not agree with a DRB's decision pursuant to Section C.2.6 (Decision), any Party may file a Notice of Claim pursuant to Administrative Code § 7-201 and file a plenary action

for such Dispute in a court of competent jurisdiction sitting in the City and County of New York within ninety (90) days of the DRB's decision under Section C.2.6. No litigation or claim may be brought by either Party concerning any Dispute prior to using the procedures described in this Appendix "C". Failure of a Party to file an action within the ninety-day period in this clause (a) will result in an irrevocable waiver of such Party's right to file a claim with respect to the relevant Dispute. The DRB's decision shall be persuasive in this litigation.

(b) **Jurisdiction.** Subject to first satisfying the terms of this Appendix "C", each Party irrevocably submits to the exclusive jurisdiction of any court of competent jurisdiction sitting in the City and County of New York, and any appellate court thereof, for the settlement of any Dispute. The New York courts are the most appropriate and convenient courts to settle any such Dispute and each of the Parties to this Agreement waives objection to those courts on the grounds of inconvenient forum or otherwise in relation to proceedings in connection with this Agreement.

(c) **JURY WAIVER.** EACH OF THE PARTIES TO THIS AGREEMENT WAIVES ANY RIGHT IT MAY HAVE TO A JURY TRIAL OF ANY CLAIM OR CAUSE OF ACTION IN CONNECTION WITH ANY DISPUTE. THIS AGREEMENT MAY BE FILED AS A WRITTEN CONSENT TO TRIAL BY THE COURT.

PART A
FORM OF DRB AGREEMENT

THIS DRB AGREEMENT ("DRB Agreement") is made and entered into this [•] day of [•], 202[•], among the City of New York (the "**City**"), acting by and through its Department of Design and Construction (the "**DDC**"), [•] (the "**Contractor**"), [•] (each a "**Utility**", and collectively, the "**Utilities"**), and [**INSERT BOARD MEMBER NAMES**] (each a "**Board Member**," and collectively, the "**Board Members**"), with reference to the following facts:

(A) DDC, the Contractor, and the Utility(ies) have entered into that certain Joint Bid Agreement dated [•] (the "**Agreement**").

(B) DDC and the Contractor have entered into that certain construction contract dated [•], where the Contractor has agreed, among other things, to construct the [•] project (the **"Project"**).

(C) Appendix "C" of the Agreement provides for the establishment and operation of a DRB (the "**Board**") to assist in resolving any Dispute that may arise among the Contractor and the Utility(ies) in respect to the Project.

NOW, THEREFORE, in consideration of the terms, conditions, covenants, and agreements contained in this DRB Agreement, the signatories to this DRB Agreement agree as follows:

1. **ESTABLISHMENT OF DRB**

   a. The Board will constitute and begin operation upon execution of this DRB Agreement by DDC, the Contractor, the Utility(ies), and all three (3) Board Members. This DRB Agreement and the Board Members' tenure will terminate on the earlier of (i) early termination of the Agreement and (ii) expiration of a conference commenced within twenty-four (24) months after Project completion (unless otherwise extended or terminated in accordance with this DRB Agreement or applicable law). Any Board Member may be terminated either (i) mutually by the Parties and DDC agreeing collectively in writing for any reason at the convenience of the Parties, (ii) by DDC or any Party for any material breach that is not cured within a reasonable period following the applicable Party's written notification of such breach, or (iii) by DDC or any Party, due to any fraudulent, criminal, or willful misconduct by any such Board Member at any time (whether or not related to this Agreement). Prior to DDC or any Party terminating a Board Member under (iii) for fraud, criminal or willful misconduct, the applicable Board Member will be provided with an opportunity to be heard on no less than five (5) days' written notice. DDC may direct the Board Member to cease performing work under this DRB Agreement pending the opportunity to be heard and DDC's determination.

   b. Each Board Member represents, warrants, and covenants on their behalf that they comply with the criteria and limitations for membership described in Part B (DRB Procedure) of Appendix "C" to the Agreement.

   c. All three (3) Board Members must have submitted and received approval of disclosure statements according to the requirements of Section 4 of Part B (DRB) of Appendix "C" to the Agreement.

   d. If during the term of this DRB Agreement, a Board Member has a discussion regarding employment or enters into any agreement for employment with DDC or the City of New York, the Contractor, or the Utility(ies), the Board Member must immediately disclose such discussion or agreement to both DDC and the Parties, and the Board Member will be disqualified from serving on the Board.

   e. The purpose of this Board is to engage in:

      i. Dispute avoidance activities, which include fostering and conducting proactive discussion on Project issues through attending regular Board meetings and participating in site visits; and

      ii. resolution activities which include issuing timely and impartial recommendations for resolution of Disputes.

2. **BOARD RESPONSIBILITIES**

a. The Board will fairly and impartially consider and provide written decisions for resolution of Disputes in accordance with Appendix "C" (Dispute Resolution Procedure) of the Agreement and Part B (DRB Procedure) of Appendix "C" to the Agreement. The Board Members will perform the services necessary to participate in the Board's actions in accordance with this DRB Agreement.

b. Board Members will be kept informed of Project-related activities and other developments by means of quarterly progress reports, and other relevant information prepared by the Parties. Board Members will also attend material progress meetings not more frequently than quarterly to keep informed of construction progress and any circumstances that could form the basis of a Dispute. Board Members may also perform other activities, including site visits, document review and other means necessary to stay informed about the Project, subject to approval by the Parties.

c. All Board Members are to act independently in the consideration of facts and conditions surrounding any Dispute. Seeking the Board Members' advice or consultation, ex parte, is expressly prohibited; provided, however, that any Party may seek such advice or consultation at a Board meeting, after first giving notice to all interested parties. A Board Member who has ex parte contact with DDC or any Party, or a representative of either, may be subject to disqualification and removal from the Board.

d. The Board, subject to approval by the Parties, must adopt operating procedures that supplement and are consistent with the requirements in this DRB Agreement and the Agreement and which must be in the form of Part D (Operating Procedures) of Appendix "C" to the Agreement. Any deviation from the form of operating procedures included as Part D (Operating Procedures) of Appendix "C" to the Agreement must be approved by all parties to this DRB Agreement.

e. The Board must consider the facts and circumstances forming the basis of a referred Dispute impartially and independently, and evaluate the merits based on careful consideration of the information submitted by the Parties, the terms and conditions of the Agreement, the terms and conditions of the Contract Documents, and Applicable Law. The Board shall not:

    i. undermine the provisions of the Agreement or the Contract Documents;

    ii. disregard or alter any requirements of the Agreement or the Contract Documents, or alter the allocation of risk specified therein; or

    iii. supplant or otherwise interfere with the respective rights, authority, duties, and obligations of DDC, the Contractor, or the Utility as set forth in the Agreement or Contract Documents.

f. The Board will make all reasonable efforts to reach unanimous recommendations. If this cannot be accomplished, the Board must include written minority recommendations and supporting rationale within the full Board report, but do not identify the dissenting member.

g. Board Members may withdraw from the Board upon delivery of written notice of withdrawal to DDC, the Contractor, the Utility, and the other Board Members, which notice must specify a withdrawal date at least sixty days following the date of delivery of such notice. In addition, a Board Member may be disqualified from serving on the DRB, as set forth in Section 8 of Part B (DRB Procedure) of Appendix "C" to the Agreement. Should the need arise to appoint a replacement Board Member, the replacement member will be appointed in the same manner as provided by the Agreement for appointment of the original member. The selection of a replacement Board Member will begin promptly upon notification of the necessity for a replacement and must be completed within thirty

days thereafter. The change in Board membership will be evidenced by the new Board Member's signature on this DRB Agreement.

h. The personal services of the Board Member are a condition to receiving payment under this DRB Agreement. No Board Member will assign any of their work pursuant to this DRB Agreement without the prior written consent of DDC, the Contractor, and the Utility.

i. Subject to any requirements under law, each Board Member will keep matters related to the DRB Agreement and the Board confidential.

j. Each Board Member, in the performance of their duties on the Board, is acting as an independent contractor and not as an employee of DDC, the Contractor, or the Utility. No Board Member will be entitled to any employee benefits.

3. **CONFERENCES AND DECISIONS**

a. Each Dispute under the Agreement must be heard and decided by the Board in accordance with the procedures and timelines established in Appendix "C" of the Agreement and as set forth in Part B (DRB Procedure) of Appendix "C" to the Agreement. The Board's written recommendation must include the Board's reasoning and supporting rationale for its conclusion.
b. Within the limits set by Appendix "C" of the Agreement, the Board will have the right to establish its own procedures and time limits, including the right to establish or to waive evidentiary rules and procedures.

4. **PROVISION OF DOCUMENTS TO BOARD**

a. Once the Board is initially appointed, the Contractor and/or the Utility(ies) must furnish to each Board Member one copy of the Agreement, the Project's contract, and all other relevant Project-related documents, in accordance with Section 9(a)(ii) of Part B (DRB Procedures) of Appendix "C" to the Agreement.

5. **PAYMENT**

a. The Contractor will pay all of the costs related to the services rendered by each Board Member in accordance Section 10 of Part B of Appendix "C" to the Agreement. All payments will be made within thirty (30) days of the Contractor's receipt of an acceptable invoice, which at minimum contains the information required in Section 5(b), below.

b. Invoices for payment for Board Member work completed under this DRB Agreement will be submitted monthly. Such invoices will be in a format approved by the Parties and accompanied by a general description of activities performed during the relevant period. The value of work accomplished for payment will be established from the billing rate and hours expended by the Board Member together with direct, reasonable, non-salary expenses. Billings for expenses will include an itemized listing supported by copies of the original bills, invoices, expense accounts and miscellaneous supporting data.

c. Out-of-pocket travel costs will be reimbursed to the extent they are pre-approved by all Parties, following the guidance of the New York City Comptroller's Directive #6.

d. Each Board Member must keep available for inspection, for a period of six years after final payment, the costs records and accounts pertaining to this DRB Agreement.

e. Unless otherwise permitted by the Parties, each Board Member may not bill more than two (2) hours for the first month of engagement spend analyzing Contract Documents, attending trainings and reviewing DRB procedures. And no more than two (2) hours per month thereafter preparing for any quarterly Project meetings or calls and communications or coordinating with the Parties on matters not relating to Disputes. This hourly limitation does not apply to work performed by the Board Members in connection with any Disputes before the Board and should not be viewed as a minimum billable requirement as the City does not wish to encourage the billing of two (2) hours per month unless such time is required for the Board Member's performance of its duties.

f. The Board Members may not bill for any administrative tasks performed on the Project (including, without limitation, preparing or discussing invoices, scheduling, negotiating this DRB Agreement).

6. **LEGAL RELATIONS**

a. To the fullest extent permitted by Applicable Law, each Board Member shall be accorded quasi-judicial immunity for any interpretations or recommendations associated with Board activities.

b. Except for a breach of this DRB Agreement, to the fullest extent permitted by Applicable Law and to the extent the Board Member was acting within the scope of their employment and in the discharge of their duties and not in violation of any rule or regulation, the Parties shall defend, indemnify and hold harmless each Board Member from (i) any personal or professional liability arising from or related to Board activities performed in accordance with this DRB Agreement, and (ii) any claims, losses, demands, costs, and damages for bodily injury, property damage, or economic loss arising out of or related to Board Members carrying out their obligations in accordance with this DRB Agreement. In connection with such indemnification, the Office of the Corporation Counsel (the New York City Law Department ("Law Department")) will represent and defend each Board Member except if a conflict exists; where such conflict exists, the Law Department will select conflict counsel.

c. The Parties agree that no Board Member shall participate as a witness or expert in any pending or subsequent litigation or arbitration arising out of this DRB Agreement, the Agreement, and/or the Project, except in connection with any actions brought in connection with a Board Member breach under Section 1(a) above, or any proceedings arising out of the Parties' obligations to defend, indemnify and hold harmless the Board Members under this Section 6.

7. **MISCELLANEOUS**

a. This DRB Agreement will commence upon execution of this DRB Agreement by DDC, the Contractor, the Utility(ies), and all three Board Members, subject to the right of DDC and the Parties to terminate the services of Board Members as specified in this DRB Agreement.

b. Capitalized terms used but not defined in this DRB Agreement will have the meanings set forth in the Agreement and the Contract Documents.

c. The Parties to this DRB Agreement intend for Appendix "C" (Dispute Resolution Procedure) of the Agreement and Part B (DRB Procedure) of Appendix "C" to the Agreement and the other terms of this DRB Agreement to be complementary. Except as otherwise specifically provided in this DRB Agreement, in the event of any conflict between this DRB Agreement and said Appendix "C" (Dispute Resolution Procedure) of the Agreement and Part B (DRB Procedure) of Appendix "C" to the Agreement, Appendix "C" (Dispute Resolution Procedure) of the Agreement and Part B (DRB Procedure) of Appendix "C" to the Agreement, will control.

d. Notices under this DRB Agreement must be sent as provided in Article 9 (Notices) of the Agreement. The addresses for the Board Members are set forth on the signature pages of this DRB Agreement.

e. Each Party irrevocably submits to the exclusive jurisdiction of any court of competent jurisdiction sitting in the City and County of New York, and any appellate court thereof, for the settlement of any Dispute. The New York courts are the most appropriate and convenient courts to settle any such Dispute and each of the Parties to this DRB Agreement waive objection to those courts on the grounds of inconvenient forum or otherwise in relation to proceedings in connection with this DRB Agreement.

f. This DRB Agreement will be governed by and construed in accordance with the laws of the State of New York, without regard to conflict of laws principles.

IN WITNESS WHEREOF, the parties to this DRB Agreement have executed this DRB Agreement as of the day and year first above written.

[***Signature Pages Follow***]

This DRB Agreement is executed by the Parties as of the date written at the beginning of this DRB Agreement.

CONTRACTOR

[**CONTRACTOR NAME**]

By: _____

Name: _____

Title: _____

UTILITY

[**UTILITY NAME**]

By: _____

Name: _____

Title: _____

THE CITY OF NEW YORK,
By and through **DDC**,

By: _____

Name: _____

Title: _____

By: _____

Name: _____

Title: Board Member _____

Address:

By: _____

Name: _____

Title: Board Member _____

Address:

By: _____

Name: _____

Title: Board Member _____

Address:

PART B
DRB PROCEDURE

1. ESTABLISHMENT OF THE DRB

(a) **Purpose**

The Parties will establish the DRB to provide special expertise and assist in, and facilitate, the timely and equitable resolution of Disputes between the Parties as set forth under Appendix "C" (Dispute Resolution Procedure) of the Agreement and the DRB Agreement.

(b) **Board Membership**

Composition. The DRB will consist of three Board Members, selected as follows, with minimum qualifications set forth in Sections 2 and 3 of this Part B of Appendix "C":

(i) one member selected by the Contractor (**"Member 1"**)

(ii) one member selected by the Utility(ies) (**"Member 2"**); and

(iii) a third member, selected by Member 1 and Member 2, in accordance with Section 6 of this Part B of Appendix "C" (**"Member 3"**) (each a **"Board Member**", and collectively the "**Board Members"**). The third member will serve as the chair of the DRB.

(c) **Neutral and Impartial**

The Board Members of the DRB must be neutral, act impartially, and not have any conflict of interest (as further detailed in Section 3 of this Part B).

2. EXPERIENCE CRITERIA FOR DRB MEMBERS AND TECHNICAL ADVICE

Each Board Member must be an engineer or attorney licensed in at least one state within the United States and a nationally recognized expert in matters pertinent to a project of similar size, type, and complexity as the Project.

In addition, the chair of the DRB will be a nationally recognized expert in matters pertinent to the resolution of commercial disputes.

The DRB may, with the approval of all Parties, appoint a technical advisory firm reasonably acceptable to both Parties that is qualified and experienced in construction methodology and with significant experience on projects in New York City or projects of similar size, type, and complexity as the Project. The firm appointed will be available at all times to advise the DRB, solely on technical issues that are relevant to any Dispute before the DRB. The costs of the technical advisory firm will be approved in advance and born by all Parties, equally, per Section 10, below.

3. ADDITIONAL CRITERIA APPLICABLE TO DRB MEMBERS

In addition to the criteria set out above, the criteria for all Board Members of the DRB are the following:

(a) no Board Member will have an ownership interest in any party involved in the Agreement, or a financial interest in the Agreement, except for payment for services on the DRB; provided, that for purposes of determining conflicts of interests and disqualification, the term Board Member will include the Board Member's current primary or full-time employer, and involved will mean having a contractual relationship with DDC, the Contractor, or the Utility(ies) at any tier;

(b) no Board Member will have been previously employed by, have had financial ties to, or provided fee-based consulting services to, any Party within the two (2) years prior to award of the City contract, where the consulting fees or employment paid by that Party exceeded 20% of that member's total income in either year;

(c) each Board Member will have completed any DRB training courses provided by DDC for the Project, if any;

(d) during their tenure as a member of the DRB, no Board Member will be employed, including fee-based consulting services, by any Party involved in this DRB Agreement except with express approval of all Parties; and

(e) during their tenure as a member of the DRB, no Board Member will engage in any discussion or make any agreement with any Party regarding employment after the Project is completed.

4. DISCLOSURE STATEMENT

Before their appointments to the DRB are final, prospective Member 1 and Member 2 must submit complete disclosure statements for the approval of DDC and all Parties. Each statement will include a resume of experience, together with a declaration describing all past, present and anticipated or planned future relationships (including indirect relationships through the prospective member's primary or full-time employer) to the Project and with all Parties involved in this DRB Agreement. This disclosure must also include any financial relationship relative to the criteria in Section 3 of this Part B of Appendix "C", and disclosure of close relationships, either professional or personal, with all key personnel of all Parties to the Agreement. Member 3 of the DRB must supply such a disclosure statement to Member 1 and Member 2 and to DDC and all Parties before their appointment is final and a written certification of no conflicts of interests as required by DDC.

5. SELECTION OF MEMBER 1 AND MEMBER 2

The Contractor will select a proposed Member 1 and the Utility(ies) will select a proposed Member 2 for the DRB and convey the selected Board Member's name and reference information to the other Party(ies) within fifteen (15) business days after NTP. If any Party reasonably believes that the Board Member appointed by another Party does not meet the criteria for membership as set forth in this Part B of Appendix "C", that Party will notify the other Party of such failure and the reasons therefore and the Parties will agree either on an alternative Board Member or to resolve such discrepancy regarding qualifications.

6. NOMINATION AND APPROVAL OF MEMBER 3

Immediately after the Parties' selections for the DRB are final, Member 1 and Member 2 will select Member 3 within fourteen (14) business days thereafter and will ensure that Member 3 meets all the relevant criteria listed above. If Member 1 and Member 2 do not select Member 3 within such fourteen-day period, DDC will unilaterally make a selection.

7. EXECUTION OF MULTI-PARTY AGREEMENT

DDC, the Contractor, the Utility(ies), and all Board Members of the DRB will execute a DRB Agreement substantially in the form attached as Part A (Form of DRB Agreement) of this Appendix "C", within fourteen (14) business days after selection of Member 3.

8. DISQUALIFICATION AND REPLACEMENT OF BOARD MEMBERS

In the event that:

(a) any Board Member has a discussion regarding employment or enters into any employment agreement with the City, the Contractor, the Utility(ies), or any other contractor on the Project during their tenure on the DRB;

(b) any Board Member is discovered not to meet the relevant qualifications set forth in this Appendix "C"; or

(c) any Board Member cannot continue to serve because of death, illness, or permanent disability;

that Board Member will be disqualified (and may be dismissed at the discretion of any Party) from serving on the DRB. In the event of such a disqualification, a replacement Board Member meeting the qualifications in this Appendix "C", will be selected by the Contractor if the disqualified Board Member was Member 1, by the Utility(ies) if the disqualified Board Member was Member 2, or by Member 1 and Member 2 if the disqualified Board Member was Member 3.

9. RESPONSIBILITIES

(a) **Generally**

(i) Except for their respective participation in the DRB's activities as provided in the DRB Agreement, no Party will solicit advice or consultation from the DRB or any Board Member on matters dealing in any way with the Project, the conduct of the Work, or the resolution of problems.

(ii) All Parties must furnish to the DRB a set of all documents deemed pertinent by each Party and which become necessary or relevant for the DRB to perform its function. Pertinent documents are any drawings or sketches, calculations, procedures, schedules, estimates, or other documents used in the performance of the Work or in justifying or substantiating the relevant Party's position regarding a Dispute. All Parties must furnish a copy of such documents to each other. All Parties, in cooperation with each other, will coordinate the operations of the DRB.

(b) **Contractor's Responsibilities**

(i) **Contract-Related Documents:** The Contractor will furnish the DRB a copy of all Contract Documents and all necessary written instructions issued by DDC.

(c) **Reports to the DRB**

The Contractor and the Utility(ies) will provide the Board Members with quarterly progress reports in order to keep the DRB informed of Project-related activated and other developments.

10. BASIS OF PAYMENT

The Contractor and the Utility(ies) will split the fees and expenses of the DRB 50/50. The Contractor will be responsible to pay the fees and expenses of the Board up front, after approval by all Parties, and the Contractor will then invoice the respective Utility for their share of the 50%, in accordance with their split for the Project. If there are multiple Utilities on the Project, the individual Dispute-related costs should be split between the Contractor and the impacted Utility.

PART C
DISPUTE NOTIFICATION

Any Dispute Notification must include, at least the following:

1. the names of any individuals who are said to have knowledge about the Dispute;

2. the descriptions of any documentary evidence of the Dispute (or, alternatively, the source of such evidence);

3. the date of the act, inaction, or omission giving rise to the Dispute;

4. an explanation of the Dispute, including a description of its nature, circumstances, and cause;

5. references to any relevant provisions from the Contract Documents or Agreement;

6. if applicable, the estimated dollar value of any damages incurred or to be incurred, and how that estimate was determined (including any cost and revenue element that has been, or may be, affected);

7. if applicable, an analysis of the Project schedules showing any changes or disruptions to critical path items (included impacted delay analysis reflecting the disruption in the manner and sequence of performance that has been, or will, cause delays in the Project schedules).

8. if applicable, the disputing Party's plan for mitigating the damages suffered and the length of any delay claimed;

9. if applicable, for pricing Disputes, the disputing Party must include the final offer price priced at unit price basis, and final offers must contain an estimate for full completion of the Work at issue;

10. if applicable, legal authority concerning Utility-related issues that may be relevant to the Dispute;

11. certification by the disputing Party that the Dispute is being made in good faith, that to the best knowledge of the disputing Party, all matters stated in the Dispute are reasonably believed to be accurate and complete and that the representative signing the certification is duly authorized to execute and deliver such certification;

12. the disputing Party's proposed resolution of the Dispute; and

13. any other information the disputing Party considers relevant.

PART D
OPERATING PROCURES

1. GENERAL

1.1 These Operating Procedures are issued to define the process to be followed by the Parties and the DRB ("Board") pursuant to Part A DRB Agreement, Part B DRB Procedure, and the totality of Appendix "C" of this Agreement. These requirements are in addition to all of the other requirements in the Contract Documents. To the extent there is any inconsistency between Part D Operating Procedures and any other provision in the Contract Documents, Appendix "C" of the Agreement and the DRB Agreement will govern.

1.2 The Board will operate in an informal, flexible manner to implement its responsibilities under the Contract Documents. The Board and the Parties will endeavor to be as efficient as possible in administering the DRB process.

1.3 The Board will be impartial, unbiased, and neutral in all of its actions.

1.4 These Operating Procedures may be changed with the approval of DDC, all Parties, and the Board.

1.5 Capitalized terms used but not defined in these Operating Procedures will have the meanings set forth in the Agreement, Appendix "C", or the Contract Documents, as applicable.

2. COMMUNICATIONS

2.1 The Contractor and the Utility(ies) (each, a "Party", and collectively, "Parties") will identify a single designated representative (the "Party Representative(s)") to interact with the chair of the Board (the "DRB Chair"). All communications with the Board will be accomplished through the DRB Chair and Party Representatives by email. Each Party Representative will be responsible for communicating with other members of their respective Project teams regarding Board matters and communications.

2.2 The DRB Chair and Party Representatives will determine schedules and arrangements for Board calls, meetings, Board Conferences, and any other Board proceedings.

2.3 Communications, papers, and other documents generated by any Party will be sent directly to the DRB Chair with confirmation to the DRB Chair that a copy of such documentation has also been sent to the other Party. If requested by the DRB Chair, designated communications and documents may be sent directly to the individual Board Members. Generally, communications and submissions will be made by email and electronic means, however the DRB Chair may ask for hard copies as well.

2.4 There will be no ex-parte communication between a Board Member and any Party, other than those conducted by the DRB Chair with the Party Representatives for scheduling and/or routine administrative purposes. The Board and the Parties will maintain the confidentiality of the information and documents furnished to the Board.

3. PROJECT DOCUMENTS TO BE FURNISHED TO THE BOARD

3.1 Prior to the kick-off meeting with the Board, the Parties will provide each Board Member with the Agreement and the Contract Documents for the Project (these may be in electronic form or hard copies, as determined by the DRB Chair).

3.2 Generally, on a monthly basis, the Parties will provide to the Board regularly generated copies of the following documents: scheduling-related documents and meeting minutes. Other documents may be requested by the Board on a case-by-case basis.

3.3 The DRB Chair and the Party Representatives will confer and confirm the means and frequency of document updates to the Board; at a minimum, such documents will be provided before the Board kick-off meeting and thereafter prior to each Board meeting. The Board and the Party Representatives will schedule quarterly meetings as agreed to in advance, after the kick-off meeting.

4. BOARD MEETINGS

4.1 The Board kick-off meeting will be scheduled by the DRB Chair as soon as practicable after the Board is appointed. The DRB Chair will work with the Party Representatives to establish an agenda and to provide the Board with advance copies of pertinent Project documents so that the Board can become familiar with the Project scope, budget, and schedule and be briefed on the status of the Project as of the time the Board is on-boarded. All Parties and all Board Members will attend the kick-off meeting to determine how frequently the Board will meet and the maximum billing amount per Party per month.

4.2 Subsequent Board meetings will be scheduled as agreed with the Parties, but must take place no more frequently than as specified in the DRB Agreement. The Board and the Parties will schedule the next two Board meetings in advance. If the Parties require an adjustment to the Board meeting schedule, the DRB Chair will schedule a new date satisfactory to the Parties and the Board.

4.3 The DRB Chair will confer with the Party Representatives to prepare a draft agenda for each Board meeting; the agenda will include the items listed in the DRB Contract Documents, as well as any items specific to the Project or the issues at hand. This draft agenda will be forwarded to the Parties and to the Board Members at least ten (10) days prior to each regular meeting for review and comments. The DRB Chair will then take such comments into consideration, finalize the agenda, and distribute it to the Board Members and to the Parties prior to the meeting.

4.4 The DRB Chair will confer with the Party Representatives on who should attend Board meetings and how information will be presented to the Board at the meeting. It is preferred that the Parties confer in advance of the Board meeting and prepare a joint Project update to the Board, tracking to the meeting agenda.

4.5 The Parties may agree to have the Board meetings coincide with regularly scheduled progress meetings. If that is done, the Board should attend the progress meeting as observers, and then hold the Board meeting immediately after the progress meeting.

4.6 Each Board meeting will consist of a round table discussion of the agenda items. The Board meeting will include a site visit for the Board to get a firsthand look at the work being performed on the Project. The Board should be accompanied by representatives of all Parties during any Board site visits.

4.7 After each Board meeting, the DRB Chair will prepare a high-level summary of the issues addressed at the Board meeting. The Board meeting summary will be reviewed by the Parties and the Board Members, corrected as necessary, and approved at the next Board meeting.

5. BOARD CONFERENCES IN THE EVENT OF A DISPUTE

5.1 Each Party must submit their Dispute Statements to the Board, providing an equivalent level of detail as the Dispute Notification included as Part C of the DRB Agreement

5.2 The DRB Chair will schedule a joint meeting or call, after receipt of each Party's Dispute Statements by the DRB Chair, with the Party Representatives and the Board Members to agree on:

a. Scope of the Board Conference and relief requested (any unresolved scope issues will be determined by the Board)

b. Date for the Board Conference

c. Sequence, form and content of position papers (including rebuttals)

d. Preparation and exchange of expert reports (if used)

e. Schedule for submission of position papers and any other documents

f. Date for submission of Board Conference participants list

g. Date for submission of Board Conference presentations

h. Logistics of the DRB conference, including location and the manner in which documents will be submitted and exchanged

5.3 The DRB Chair will confirm to the Party Representatives and Board the schedule of actions and submissions leading up to the Board Conference. The DRB Chair may schedule other planning conferences, from time to time, to ensure that Board Conference preparations are proceeding effectively and efficiently.

5.4 The DRB Chair will hold a conference call with the Party Representatives to go over final logistics of the Board Conference, confirm that all submissions are in order, and address any issues of concern that the Parties have regarding the Board Conference.

6. PREPARATION FOR A BOARD CONFERENCE

6.1 The Board will commence a Board Conference within the requisite deadlines set forth in the Agreement, with due consideration to the needs and preferences of the Parties. Normally, in-person Board Conferences will be conducted at or near the project site or may be virtual.

6.2 The DRB Chair will confer with the Parties on whether the Dispute Statements (and rebuttals, if requested) will be serial (claimant submits first, followed by respondent) or simultaneous (claimant respondent submit at same time); generally, the goal is to make the submission process as efficient as possible by ensuring focus on the issues in dispute.

6.3 Each Party's position paper should be structured to be a stand-alone document that includes at minimum the information listed in the Dispute Notification included as Part C of the DRB Agreement; states the Party's position on each element of the Dispute; clearly defines the contractual justification for the stated position; and provides the reasoning as to why each believes the other Party's position is not contractually or factually correct. The position paper must also include supporting exhibits referred to in the position paper text or that will be used at the Board Conference.

6.4 When the scope of the Board Conference includes Subcontractor claims, the position papers should include any necessary information and documents from the Subcontractor and should be identified as such.

6.5 Position papers must be simultaneously delivered to the Board Members and the other Party on a schedule to be established by the Board. The Board will also establish a schedule for rebuttal papers, if any.

6.6 Once position papers and/or rebuttal papers have been submitted, the Parties may not introduce new information or documents regarding the dispute, absent the Board's permission.

6.7 On a date set by the Board, the Parties will exchange and submit to the Board a list of the participants and other attendees that each Party plans to have at the Board Conference. The Parties are encouraged to limit the number of persons at the Board Conference to the necessary minimum, preferably those directly involved in the Project; those with direct knowledge of the issues in dispute; or those whose presence is needed because they will be reviewing the Board's recommendation. The list of attendees should include:

a. Name, title, and professional affiliation

b. Role of the person at the Board Conference (observer or participant)

c. Brief summary of matters that any participant is anticipated to address

6.8 On a date set by the Board, the Parties will submit and exchange any presentation materials they intend to use at the Board Conference. The Parties are encouraged to use summaries, charts, chronologies, and visual aids that will assist the Board in understanding the information and documents to be presented. If a Party uses a PowerPoint presentation, the slides should be numbered and the Board should be given a copy in a format that permits notetaking. The presentation materials should be consistent with the position papers and/or rebuttals previously submitted.

7. CONDUCT OF THE BOARD CONFERENCE

7.1 At any Board Conference that includes Subcontractor claims, the Party must require that each Subcontractor involved in the Dispute have present at the Board Conference an authorized representative with actual knowledge of the facts underlying the subcontractor claim. The Subcontractor's representative should be prepared to answer questions by the Board, if any, and may assist in the presentation.

7.2 The Board will have sole discretion in determining whether putative evidence may be introduced in the Board Conference process. There will be no testimony under oath or any cross-examination by the other Party.

7.3 Except for good cause shown, no Party will be allowed to present information, documents, etc., at the Board Conference that was not included in the pre-Board Conference submissions or otherwise provided to the other Party pre-Board Conference. In those rare instances where supplemental or new information is permitted, the Board Conference will be held open until the other Party has had an adequate opportunity to respond.

7.4 Each Party will be allowed to present its position uninterrupted by the other Party. The claimant will make its presentation first, followed by the respondent. After both Parties have made their presentations, the Board will hear rebuttals in turn.

7.5 Once the Parties are satisfied that they have presented their arguments completely and the Board has no further questions, the DRB Chair will advise whether the Board Conference is closed at that time, or whether the Board wants any additional submittals. If additional submittals are requested, the Board will set a submission schedule, and once the additional submittals are received, the DRB Chair will advise the Parties when the Board Conference is closed.

8. BOARD DELIBERATIONS AND REPORT

8.1 Following the close of the Board Conference, the Board will confer to review the Parties' submissions and issue a recommendation to the Parties within the time allowed under the DRB Contract Documents (The Board will close the Board Conference by email after receipt of all briefs, exhibits, etc.) Additional time may be allowed if all Parties agree.

8.2 If a unanimous recommendation cannot be reached, the dissenting Board Member's recommendation, along with the supporting rationale, will be included as a minority opinion in the Board's report, however, the dissenting Board Member will not be identified.

8.3 The report will consist of a concise description of the dispute and relief requested; appropriate summaries of each Party's position; findings as to the facts of the dispute; citation to applicable parts of the Agreement, Contract Documents, Project records, and Party submissions; analysis and rationale for the recommendation; and the recommendation.

8.4 Within three (3) business days of receiving the Board's recommendations, all Parties must respond to the Board in writing, signifying that the Dispute is either resolved or remains unresolved. Failure by either Party to provide written acceptance or rejection to the Board's recommendation within the three (3) days shall be deemed to be acceptance of the recommendation by that Party.

Section JB 9.28 – UTILITY EXPANDED WORK ALLOWANCE

JB 9.28.1 PURPOSE

An Allowance has been established for the items set forth in sub-Section JB 9.28.3 below ("Utility Expanded Work Allowance" or "UEWA") for the purpose of overruns and extra work on Joint Bid utility work that is the responsibility of a Private Utility ("PU") participating in the Joint Bid contract. Payment for the items set forth in sub-section JB 9.28.3 ("Expanded Work Items") may be made through the UEWA, as directed by the Engineer. "Extra Work", "overrun", and "Allowance" are defined by the Standard Construction Contract (*see* Articles 2.1.16, 26.1, and 2.1.4, respectively) and nothing in this Section alters, or will be deemed to alter the interpretation or application of, the Standard Construction Contract, including but not limited to Articles 25, 26, 28, and 78 of the Standard Construction Contract. Other terms, including Extra Utility Work and Significant Utility Change, are as defined in the 2025 JB Agreement ("Agreement"), in the JB-Pages of this contract. All negotiations for extra work and overrun pricing between the Contractor and the PU are governed by the Agreement.

JB 9.28.2 PROCESS

(a) If the Engineer determines that use of the UEWA is appropriate, in their sole discretion, the Engineer will direct the PU to prepare a written scope document for the Expanded Work Items for the Contractor's execution ("UEWA Scope Memo"). The UEWA Scope Memo will set forth the maximum amount payable from the UEWA prior to the execution of a final cost memorandum ("Maximum Amount"), in accordance with this Section. The Maximum Amount may be increased from time to time by the PU, in their sole discretion, except that the Maximum Amount may not exceed 80% of the PU's estimated total cost for such Work (the "Estimated Cost") unless and until a final cost is determined and a final cost memorandum ("Final Cost Memo") executed in accordance with this Section.

(b) Neither the Maximum Amount nor the Estimated Cost will be deemed to be the final cost of the Expanded Work Items. The final cost for the Expanded Work Items will be determined in accordance with Article 26 of the Standard Construction Contract. The Contractor must submit its detailed price proposal for the Expanded Work Items, calculated in accordance with the Contract, within the time period set forth in the UEWA Scope Memo or within 90 Days after the executed UEWA Scope Memo is issued to the Contractor, whichever is sooner.

(c) Once the UEWA Scope Memo is executed and the Contractor is directed to proceed with the Work, DDC will make progress payments, as provided in the Contract, up to the Maximum Amount or until the submission period has expired, whichever occurs sooner.

(d) DDC will not make any progress payments for the performance of the Expanded Work Items beyond the submission period set forth in sub-Section C, above, unless and until a final cost has been determined and a Final Cost Memo executed in accordance with this Section. No amounts above the Maximum Amount set by the Engineer will be payable from the UEWA, unless and until a final cost has been determined and a Final Cost Memo executed in accordance with this Section. In all events, the Contractor shall promptly and diligently comply with the Engineer's direction and perform all Work required by the Contract and the UEWA Scope Memo.

(e) Upon receipt of the Contractor's cost detailed proposal, the PU will evaluate the proposal and initiate negotiations, as necessary, to determine the final cost of the Expanded Work Items in accordance with Article 26 of the Standard Construction Contract. The Contractor is responsible to furnish time and material records in accordance with Article 28 of the Standard Construction Contract until a Final Cost Memo is executed. If the parties cannot agree on a unit price or fixed price, the Contractor will be

paid on the basis of time and material records in accordance with Article 6.15.2.4 of the JB Agreement during the DRB process as set forth in Appendix "C" of the JB Agreement.

(f) A Final Cost Memo will be prepared by the Engineer to be executed by the parties. The total net sum of the amounts added and/or credited under the UEWA Scope Memo and payment of the finalized Final Cost Memo constitutes full accord and satisfaction for the costs resulting from the Expanded Work Items. In the event the UEWA is insufficient to pay the full amount of the Final Cost Memo, the parties agree to execute change order documents for the remaining funds, subject to registration in accordance with the New York City Charter.

JB 9.28.3 PRICE TO COVER

Expanded Work Items are those items set forth below. The UEWA may be used, in the Engineer's discretion, for the following Expanded Work Items that are the responsibility of the PU:

(a) Non-material changes in the Work necessary to complete Contract Work due to site conditions that differ from those included in the Contract Documents and that could not have been anticipated by the Contractor.

(b) Non-material changes in the Work directed by the Commissioner or the Private Utility that result in a net change in the cost to the Contractor for the Work to be performed under this Contract, including but not limited to the following:

  (i) Significant Utility Changes, overruns of unit price items and quantity increases in portions of work within a lump sum item.

  (ii) NYCDOT traffic stipulations or permit requirements that significantly differ from those included in the Contract Documents and that could not have been anticipated by the Contractor.

  (iii) Changes to the sizes of materials or changes to specifications of materials.

  (iv) Materials/structures not included in the Contract Documents that are necessary to complete Contract Work and that could not have been anticipated the Contractor.

JB 9.28.4 BASIS OF PAYMENT

(a) The fixed sum must be considered the price bid for this item. The fixed sum is not to be altered in any manner by the bidder. Should the amount shown be altered, the new figures will be disregarded, and the original price will be used to determine the total amount bid for the contract.

(b) The payment(s) made under this item will be equal to the Final Cost Memo prepared by the Engineer and executed by the parties in accordance with JB 9.28.2(f) above as proof of work performed for this item as approved by the Engineer.

(c) The total estimated cost of this item is the "fixed sum" amount shown for this item in the Bid Schedule and shall not be varied in the bid. The "fixed sum" amount is included in the bid solely to ensure that sufficient monies will be available to pay the Contractor for this work, which may be more or less than the fixed sum amount.

(d) The price will cover the cost of all labor, materials, equipment, insurance and incidentals necessary to complete the work under this section in accordance with the Contract Drawings, the specifications and the directions of the Engineer.

JB 9.28.5 DIRECT PAYMENT

(a) In the scenario that the UEWA fixed sum amount is expended, the PU may pay the Contractor directly for payments under this item. Direct payments must conform to the following requirements:

(i) Payments must be made in a timely manner, in accordance with the City's prompt payment rules, including those in Section 4-06 of the Payment Procurement Board Rules (PPB Rules). If payments are not made in a timely manner, the requirements of Section 4-06 (d) will apply.

(ii) In order to facilitate the shared cost reconciliation between the City and the Utilities, the Contractor must provide details of all payments from the Utilities. These details must include the items, quantities, and amounts that are covered by the payment.

(iii) Determination of quantities and items for separate payment will be made by the Engineer, using the same methods and procedures used for Utility items paid directly by the City.

Payment will be made under:

Item No.	Item	Pay Unit
JB 9.28	UTILITY EXPANDED WORK ALLOWANCE	F.S.

conEdison

Guideline Document for Public Improvement

CONST- 029 Revision Number 4

Purpose:	To update the Public Improvement Contractor Guideline document for safe entry into Sub-Surface Structures and moving energized underground cables.		
Revision Date:	7-30-2020	Next Revision Due Date:	7-30-2022
Supersedes Date:	6-30-2018	Revision Cycle Period:	Once every 2 years

TYPE	NAME	DATE
EH&S	Glenn D. Newell	7/30/2020
Technical	Joseph Bedell, Joseph Bedell Jr. John Stefandl & Marlon Kalloo	7/30/2020
Legal	Inna Rozenberg	7/30/2020

Summary of Changes:

1. Updated Reference Section to Include OSHA 1926 Subpart V
2. Removed Section on Moving Energized U.G. Cables Located Inside Sub-Surface Structures. (Previously Section 4.0 in Revision 3)
3. Updated/Revised Sections 1.4, 2.1, 2.2.2, 3.4, 3.6, 3.8, 3.9, 4.5.5, 4.7 & 4.7.1
4. Added New Section 4.5.4 – HDPE Conduit
5. Added New Chapter 5.0 – Breaking Out a Point of Entry (POE)

Training Requirements

- N/A

DOJT/Course #, etc. Associated with this Operating Document:

None

Subject Matter Expert:	Marlon Kalloo	Approved Date:	7/30/2020	M. Kalloo
Approver Name:	Theresa Kong	Approved Date:	7/30/2020	

Paper copies of Operating Documents are uncontrolled and therefore may be outdated. Verify current version prior to use.

Consolidated Edison Company of New York, Inc.

Guideline

For

Safe Entry into Sub-Surface Structures (Electrical Enclosed Space),

Moving Energized Underground Cables

Removal of Conduit from Cables, and

Breaking Point of Entry (POE's) Into Sub-Surface Structures

Performed by

Municipal Contractors

TABLE OF CONTENTS:

1.0 – Definitions

1.1 - Competent Person
1.2 - Attendant
1.3 - Electrical Enclosed Space
1.4 - CET Specification
1.5 - JB Specification
1.6 - Public Improvement Representative
1.7 – Municipal Contractor
1.8 - Electrically Competent Qualified Municipal Contractor

2.0 - References

2.1 – OSHA Sections 1910.269 & 1926 Subpart V
2.2 - Training
2.2.1 – Electrically Competent Qualified Municipal Contractor
2.2.2- Municipal Contractor Employee

3.0 - Safe Entry into Sub-Surface Structures, (Electrical Enclosed Space)

3.1 - Purpose
3.2 - Application
3.3 - Guideline
3.4 - Inspection / Testing
3.5 - Job Briefing
3.6 - Attendants
3.7 - Hazardous Atmosphere
3.8 - Personal Protective Equipment
3.9 – Con Edison's Personal Protective Equipment Guideline
3.10 - Access

4.0 - Removal of Conduit from Cables and Moving Energized Underground Cables Located Outside of Subsurface Structures

4.1 – Purpose
4.2 – Application
4.3 – Guideline
4.4 – Job Briefing
4.5 - Removal of Conduit from Cables
4.5.1 - Pre-cast Concrete Conduit
4.5.2 - Concrete Encased Conduit
4.5.3 - Wooden Conduit
4.5.4 – HDPE Conduit
4.5.5 – Metal Conduit
4.6 - Visual Inspection
4.7 - Cable Moving Operations
4.7.1 - Personal Protective Equipment

5.0 - Breaking Out a Point of Entry (POE's) in an Electrical Enclose Space

5.1 – Activities Prior to creating POE's
5.2 – Creation of POE Operations

1.0 Definitions

1.1 Competent Person- As a general rule, a Competent Person is an individual who, by way of training and/or experience, is knowledgeable of OSHA and other applicable standards, is capable of identifying workplace hazards relating to the specific operation, and is designated by the employer with the authority to take all appropriate actions necessary to comply with all applicable standards and properly address hazards. Some OSHA standards add additional specific requirements that must be met by the Competent Person.

1.2 Attendant - An authorized individual who is stationed outside a sub-surface structure or an Electrical Enclosed Space to monitor the authorized entrants and to perform duties assigned including providing assistance to individual inside the sub-surface structure or Electrical Enclosed Space.

1.3 Electrical Enclosed Space – OSHA defines an Electrical Enclosed Space as a working space, such as a manhole, vault, tunnel, service box, or shaft, used for the operation and maintenance of electric power generation, transmission, and distribution lines and equipment. An Electrical Enclosed Space has a limited means of egress or entry, and is designed for periodic entry under normal operating conditions. Under normal conditions, an Electrical Enclosed Space does not contain a hazardous atmosphere, but may contain a hazardous atmosphere under abnormal conditions.

1.4 CET Specification – CET Specification defining private utility work within Municipal Construction Contracts.

1.5 JB Specification – Joint Bid specification defining private utility work within a NYC DDC Capital contract.

1.6 Public Improvement Representative - Con Edison employee, (Inspector, Construction Representative, Chief Construction Inspector, Project Specialist, or Manager) assigned to the Public Improvement section.

1.7 Municipal Contractor – Construction municipal contractor performing work for Municipal, State or other Public Agencies or Authorities.

1.8 Electrically Competent Qualified Municipal Contractor - is a Municipal Contractor employee designated and documented by the Municipal Contractor employer, in writing, as the electrically competent and qualified person who, by way of training and/or experience has the skills and techniques necessary to distinguish exposed live parts from other parts of electrical equipment, can identify non-insulated conductors from insulated conductors and/or cables and has the knowledge of the precautionary techniques, personal protective equipment, insulating and shielding materials, and insulated tools that are required for working on or near exposed energized electrical equipment. The Electrically Competent Qualified Municipal Contractor employee is capable of identifying varying workplace electrical hazards relating to the specific operation and has the authority to take appropriate actions, as required. In order to meet the task specific qualifications of this guideline, the Electrically Competent Qualified Municipal Contractor employee must be familiar with this document and be able to demonstrate adherence.

2.0 References

2.1 **OSHA Section 1910.269 –** Electric Power Generation, Transmission & Distribution **& 1926 Subpart V –**Electric Power Transmission and Distribution

2.2 **Training-** The OSHA Office of Training and Education (OTE) develops, directs, oversees, manages and ensures implementation of OSHA's national training and education policies and programs in support of OSHA's strategic goals with the objective of reducing occupational hazards through direct intervention, promoting a safety and health culture through compliance assistance, cooperative programs and strong leadership and maximizing OSHA effectiveness and efficiency by strengthening capabilities and infrastructure.

All Municipal Contractor employees shall be trained in and familiar with the safety-related work practices, safety procedures, and other safety requirements in section 1910.269(a)(2) and 1926 Subpart V that pertains to the Municipal Contractor employees' respective job assignments. Municipal Contractor employees' shall also be trained in and familiar with any other safety practices, including emergency procedures, such as manhole rescue, that are not specifically addressed by this referenced section but that is related to their work and is necessary for their safety.

Con Edison manhole inspection and underground awareness training can be scheduled through the Con Edison TLC upon request of the municipal contractor. OSHA 10 certification cards and CPR / First Aid training are prerequisites.

2.2.1 Electrically Competent Qualified municipal contractors shall also be trained and competent in:

a- The skills and techniques necessary to distinguish exposed live parts from other parts of electrical equipment

b- The skills and techniques necessary to determine exposed live parts from other parts, (determination of non-insulated conductors from insulated conductors / cables).

c- The knowledge of the precautionary techniques, personal protective equipment, insulating and shielding materials, and insulated tools that are required for working on or near <u>exposed energized parts of electrical equipment.</u> Generally, the Municipal Contractor will not be required to work on or near exposed/non-insulated energized parts of electrical equipment or cables. In the event special conditions exist requiring working near exposed/non insulated energized parts of electrical equipment or cables, the Municipal Contractor shall cease working and immediately contact the authorized Con Edison Inspector so that a further assessment of the condition can be evaluated, and appropriate guidance provided.

d- The Electrically Competent Qualified Municipal Contractor employee shall determine, through regular supervision and through inspections conducted on at least an annual basis that each Municipal Contractor employee is complying with the safety-related work practices outlined in this guidance document.

2.2.2 A Municipal Contractor employee shall receive additional training (or retraining) by the Electrically Competent Municipal Contractor under any of the following conditions:

a- If the Electrically Competent Qualified Municipal Contractor employee indicates that the Municipal Contractor employee is not complying with safety-related work practices

b- If new technology, new types of equipment, or changes in procedures necessitate the use of safety-related work practices that are different from those which the Municipal Contractor employee would normally use

c- If the Municipal Contractor employee must employ other safety-related work practices that are not normally used or that require modification from those stated in this guidance document

Note: OSHA requires retraining before commencing with a task that has not been performed within one year.

The required training shall be of the classroom and/or on-the-job type. The training shall establish Municipal Contractor proficiency in the work practices required and shall introduce the procedures necessary for compliance. The Electrically Competent Qualified Municipal Contractor shall certify that each Municipal Contractor employee has received the training required and retains records of this training to be supplied upon request by Con Edison.

3.0 Safe Entry into Sub-Surface Structures, (Electrical Enclosed Space)

3.1 **Purpose:** To establish a guideline that shall be employed for safe entry into Con Edison sub-surface structures by Municipal Contractors.

3.2 **Application:** Municipal Contractor personnel

3.3 **Guideline:** This guideline provides the requirements for practices that shall be employed for safe entry into Con Edison sub-surface structures. Municipal Contractor personnel requiring entry into Con Edison sub-surface structures shall adhere to this guideline.

3.4 Inspection/Testing

Prior to entry into a Con Edison sub-surface structure, properly trained and qualified Con Edison electrical personnel must conduct an inspection. The assessment will determine if the condition of the electrical facilities contained therein is sufficient to allow need based unrestricted access. Con Edison electrical personnel shall validate that the Con Edison sub-surface structure inspected is approved for need based unrestricted access. The Con Edison Inspector shall communicate and document to an Electrically Competent Municipal Contractor personnel any safety precautions to be taken and that the subsurface structure is safe for entry. Any condition deemed to be un-safe through this formal inspection process would preclude granting access.

An inspection must take place daily prior to Municipal Contractor entry. Once the cover is placed on the electric subsurface structure another inspection must occur prior to Municipal Contractor entry. Inspections include but are not limited to:

1) Testing for stray voltage by a qualified Con Edison employee or qualified Municipal Contractor employee.

2) Completion of atmospheric testing.

3) Determination that it is safe to enter the space.

4) A visual inspection for any abnormalities previously defined.

5) Communication of inspection results and hazards to the Con Edison inspectors and the municipal contractor supervisor.

3.5 Job Briefing

The Electrically Competent Qualified Municipal Contractor in charge shall conduct a job briefing with the municipal contractor's employees involved before they start the job. The briefing shall cover: the hazards associated with the job; work procedures involved; special precautions; and personal protective equipment requirements. The Electrically Competent Qualified Municipal Contractor shall instruct that all cables are to be treated as energized. Additional briefings shall be held if significant changes, which might affect the safety of the municipal contractor's employees, occur during the course of the work. The Electrically Competent Qualified Municipal Contractor shall document completion of the job briefing. A copy of the documented job briefing should be available upon request by Con Edison.

3.6 Attendants

While work is performed in a Con Edison sub-surface structure, a Municipal Contractor Attendant shall be available in the immediate vicinity to render emergency assistance. Sub-surface structure Attendants shall comply with applicable OSHA requirements.

3.7 Hazardous Atmosphere

Municipal Contractor personnel shall perform a hazardous atmosphere test before entry into any Con Edison sub-surface structure and perform continuous air monitoring in compliance with applicable OSHA requirements. Any atmospheric reading deemed to be un-safe would prohibit access to the structure. The Municipal Contractor shall immediately notify the authorized Con Edison Inspector.

3.8 Personal Protective Equipment

Municipal Contractor personnel requiring entry into Con Edison sub-surface structures shall refer to and comply with applicable OSHA requirements regarding the use of Personal Protective Equipment when performing this work. In addition, Con Edison is requiring that Municipal Contractor personnel assigned to work inside Con Edison sub-surface structures shall at all times wear Flame Resistant (FR) Clothing with a rating of 8 cal/cm^2 or HR2, a retrieval harness and that a retrieval device be on location. In addition, an atmospheric tester

must be in use continuously anytime a structure is occupied. See section 3.9 for Matrix on Con Edison's Personal Protective Equipment Guideline.

3.9 Con Edison Personal Protective Equipment Guideline

	Task	Class 0 Gloves	FR Clothing	FR Hood	Blast Goggles	Face Shield	Safety Glasses
1	Pavement breaking	N	N				Y
2	Breaking out concrete encased duct	Y	Y				Y
3	Moving energized primary cables that are located outside a structure while in proximity to joints	Y	Y	Y	Y		
4	Moving primary cables outside a structure (no joints involved)	Y	Y				Y
5	Moving energized secondary cables	Y	Y				Y
6	Hand excavate to locate precast ducts	N	N				Y
7	Hand excavate to locate direct buried cables	Y	Y				Y
8	Removing cable from conduit	Y	Y				Y
9	Breaking structure for POE from outside/inside	Y	Y			Y	Y
10	Breaking sub-structure walls	Y	Y				Y
11	Pulling rope within structure with energized cable	Y	Y				Y
12	Pulling rope in enclosed spaces	Y	Y				Y
13	Building a bench or platform within a subsurface structure to support or protect cables.	Y	Y				Y
14	Breaking out unknown precast electric duct	Y	Y				Y
15	Using digging bar over electric facility	Y	N				Y
16	Using digging bar over direct buried cables	Y	Y				Y
17	Using Pneumatic clay digger in vicinity of electric facility	Y	Y				Y
18	Installing forms for field-constructed sub-surface structures from inside the designed footprint when connected cables are present	Y	Y				Y
19	Installing forms for field-constructed subsurface structures from outside the designed footprint when connected cables are present	N	N				Y
20	Installing forms for field-constructed subsurface structure prior to first energization of new cables	N	N				Y
21	Saw cutting operation	Y	N				Y
22	Hand excavate to locate cable fault	Y	Y				Y
23	Hand excavating to find service dead leg	Y	Y				Y
24	Removing underground silo	Y	Y				Y
25	Regrade	Y	N				Y
26	Build/remove shunt box w/ energized cable inside	Y	Y				Y

3.10 Access

Municipal Contractor personnel shall not climb into or out of Con Edison sub-surface structures by stepping on cables or hangers.

4.0 Removal of Conduit from Cables and Moving Energized Underground Cables Located Outside of Subsurface Structures

4.1 **Purpose:** Establish a guideline that shall be employed by Electrically Competent Qualified Municipal Contractor personnel, meeting OSHA training requirements, when removing conduit from cables and moving Con Edison energized underground cables located outside structures.

4.2 **Application:** Municipal Contractor personnel

4.3 **Guideline:** This guideline details the requirements for practices that shall be employed when moving Con Edison energized underground cables located outside of Con Edison structures. Movement of energized cables on the Con Edison system shall be performed in accordance with the following directions. Only Electrically Competent Qualified Municipal Contractor personnel who been trained and meet necessary OSHA requirements for moving energized underground cables and in accordance with the following directions shall perform movement of energized cables on the Con Edison system.

4.4 Job Briefing

The Electrically Competent Qualified Municipal Contractor in charge shall conduct a job briefing with the Municipal Contractor's employees involved before they start the job. The briefing shall cover: the hazards associated with the job; work procedures involved; special precautions; and personal protective equipment requirements. The Electrically Competent Qualified Municipal Contractor shall instruct that all cables are to be treated as energized. Additional briefings shall be held if significant changes, which might affect the safety of the Municipal Contractor's employees, occur during the course of the work. The Electrically Competent Qualified Municipal Contractor shall document completion of the job briefing.

4.5 Removal of Conduit from Cables

All subsurface electric cable systems and related components shall be considered energized. Caution shall always be employed whenever conduits are opened to expose the interior cable.

4.5.1- Pre-cast Concrete Conduit

a- The conduit shall be fractured by striking the top end corner of the conduit with a 3 lb. hammer equipped with a non-conductive handle. When fracturing the conduit, all impact/chipping action shall be performed in such a manner so as to be directed across the top of the conduit away from any cable that may be inside of the conduit.

b- A small piece of the concrete conduit shall be chipped away so that a visual examination of the interior of the conduit can be made to verify the presence of cable. All impact/chipping actions shall be performed in such a manner so as to be directed across the top of the duct, away from the cable.

c- If cable is present, concrete-chipping operations shall continue until enough material has been removed to permit insertion of a non-conductive protective shield barrier between the conduit and cable or as directed by the authorized Con Edison Inspector based on existing field conditions. Material such as exterior grade plywood or lumber (min. thickness ¾") or suitably reinforced plastic sheet material (min. thickness 0.060" – e.g. Norplex Micarta RT504 NEMA Grade G-3) shall be used for this purpose. This shield material shall provide protection for the cable during the remaining conduit removal operations. The remainder of the conduit shall be fractured using the 3 lb. hammer equipped with a non-conductive handle. Care shall be taken so as to avoid any impact upon the cable, either by direct or indirect hammer blows.

d- During and after conduit removal operations, cable/conduit shall be properly supported as indicated in Section 5.7, below.

4.5.2 - Concrete Encased Conduit

a- The concrete encased conduit (including but not limited to pre-cast, fiber, tile, clay), shall be fractured by striking the top end corner of the conduit with a 3 lb. hammer equipped with a non-conductive handle. When fracturing the conduit, all impact/chipping action shall be performed in such a manner so as to be directed across the top of the conduit away from any cable that may be inside of the conduit.

b- For concrete encased conduit, it may be necessary to employ a handheld cold chisel (in conjunction with the 3 lb. hammer) to remove concrete encasement. If a chisel is utilized, all impact/chipping actions shall be performed in such a manner so as to be directed across the top of the duct, away from the cable.

c- If the concrete encasement is so dense as to render the use of a hammer and handheld chisel non-effective, an 8-pound sledgehammer may be employed. If neither of these devices proves effective, the use of a pneumatic chipping hammer will be permitted. The weight/size of the pneumatic chipping hammer shall not exceed 20 lbs. When utilizing a pneumatic chipping hammer, the device shall be securely positioned and be under close operator control at all times. The tool bit used for these operations shall be chisel shaped with a minimum width of two (2") inches. All impact/chipping actions shall be performed in such a manner so as to be directed across the top of the duct, away from the cable.

d- A small piece of the concrete conduit shall be chipped away so as to permit verification of the presence of cable inside the conduit.

e- If cable is present, concrete-chipping operations shall continue until enough material has been removed to permit insertion of a non-conductive protective shield barrier between the conduit and cable or as directed by the authorized Con Edison Inspector

based on existing field conditions. Material such as exterior grade plywood or lumber (min. thickness ¾") or suitably reinforced plastic sheet material (min. thickness 0.060" – e.g. Norplex Micarta RT504 NEMA Grade G-3) shall be used for this purpose. This shield material shall provide protection for the cable during the remaining conduit removal operation.

f- After installation of the shield material has been completed, continue removal of remaining conduit and encasement, using handheld and power tools.

g- During and after conduit removal operations, cable/conduit shall be properly supported as indicated in Section 5.7, below.

4.5.3 – Wood Conduit

a- Wooden conduit shall be split using a handheld cold chisel and a 3 lb. hammer equipped with a non-conductive handle. All impact/chipping action shall be performed in such a manner so as to be directed across the top of the conduit away from the cable.

b- The chisel shall use to create a small window in the conduit that will permit a visual inspection of the conduit interior for the presence of cable.

c- If cable is present, wood conduit material shall continue to be removed until enough material has been removed to permit insertion of a non-conductive protective shield barrier between the conduit and cable or as directed by the authorized Con Edison Inspector based on existing field conditions. Material such as exterior grade plywood or lumber (min. thickness ¾") or suitably reinforced plastic sheet material (min. thickness 0.060" – e.g. Norplex Micarta RT504 NEMA Grade G-3) shall be used for this purpose. This shield material shall provide protection for the cable during the remaining conduit removal operation.

d- After installation of the shield material has been completed, continue removal of remaining conduit

e- During and after conduit removal operations, cable/conduit shall be properly supported as indicated in Section 5.7, below.

4.5.4 – HDPE Conduit

a- HDPE conduit shall be split using hand tools or a handheld pneumatic rotary cutting tool. All splitting/cutting actions shall be performed in such a manner so as to be directed across the top of the duct, away from the cable.

b- Pneumatic Rotary Cutting Tool – A pneumatic rotary cutting tool shall be used to score an access area in the surface of the conduit., Prior to application of the cutting tool to the surface of the

conduit, the depth collar on the pneumatic rotary cutting tool shall be set so that the cutting bit will penetrate approximately ¾ of the wall thickness of the conduit. After the conduit has been cut to the maximum depth allowable (such that the bit does not fully penetrate the thickness of the conduit), a 3 lb hammer shall be used to knock out the access area (window) outlined by the cutting tool. This will permit visual inspection of the conduit interior for the presence of cable.

c- If inspection of the interior of the conduit reveals that cable is present, a non-conductive protective shield barrier shall be inserted into the conduit between the conduit and cable. This shield material shall provide protection for the cable during the remaining conduit removal operations. Material such as exterior grade plywood or lumber (min. thickness ¾") or suitably reinforced plastic sheet material (min. thickness 0.060" – e.g. Norplex Micarta RT504 NEMA Grade G-3) shall be used for this purpose. This shield material shall provide protection for the cable during the remaining conduit removal operations.

d- If inspection of the conduit interior does not reveal the presence of cable, the remaining conduit may be removed using the tool choices mentioned in 4.5.4.a.

4.5.5 - Metal Conduit

a. When removing metal conduit, the Municipal Contractor should first excavate and expose a collar connecting two sections of conduit. Once the collar is accessible, split and/or cut the collar off to inspect the conduit interior for the presence of cable. If a metal conduit collar is NOT easily accessible, or found within 20 to 40 feet of open excavation, proceed to section 4.5.5.b. Note: If the work to be performed is in response to a suspected natural gas leak or in the presence of natural gas, only the use of non-powered hand tools is allowed. Further guidance will be provided by Gas Engineering.

b. If a collar connecting two sections of conduit cannot be found, metal conduit will be split using hand tools and/or a handheld rotary cutting tool. All splitting actions will be directed across the top of the conduit, away from the cable. Note: If the work to be performed is in response to a suspected natural gas leak or in the presence of natural gas, only the use of non-powered hand tools is allowed. Further guidance will be provided by Gas Engineering.

c. Score the outline of an access area onto the surface of the conduit. Do not fully penetrate the conduit with the tool while making this outline.

d. Use this outline as a guide for further splitting and cutting operations that will eventually create a viewing window into the conduit.

e. If inspection of the conduit interior reveals the presence of cable, insert a non-conductive protective barrier between the cable and conduit wall. The barrier will provide physical protection for the cable during remaining conduit removal operations. Materials including, but not limited to, exterior grade plywood, lumber, and Norplex Micarta are acceptable. After the installation of the non-conductive protective barrier, the removal of the remaining conduit may proceed using the tool choices mentioned in section 5.5.4b.

f. If inspection of the conduit interior does not reveal the presence of cable, the remaining conduit may be removed using the tool choices mentioned in section 4.5.5b.

4.6 Visual Inspection

a- A visual inspection of cables located outside Con Edison structures that will be moved, shall be performed by Electrically Competent Qualified Municipal Contractor personnel or the authorized Con Edison Inspector.

b- After the conduits have been broken out (removed from the cables), the exposed cable(s) shall be inspected by the Electrically Competent Qualified Municipal Contractor personnel.

c- The cables shall be visually inspected by the Electrically Competent Qualified Municipal Contractor personnel, and determined to be free from any of the defects that would prevent relocation. Cable(s) shall be free of cracks, tears, and evidence of oil stains, swelling, or melting of the insulation. Cables shall not have any exposed conductor.

4.7 Cable Moving Operations – Outside Structures

a- Prior to moving any cables outside of a subsurface structure, the cables located within the associated connecting subsurface structures shall be inspected in accordance with the guideline requirements for moving cables within Con Edison sub-structures.

b- Municipal Contractor personnel experienced in moving Con Edison cables only shall move cables.

c- Cables shall not be moved until plastic “fair-leaders” are positioned at the duct edges to prevent chaffing damage.

d- Synthetic web slings having a minimum width of two (2) inches shall support cables that have been removed from conduit. Slings shall be used in a basket hitch configuration.

e- Conduits housing cables shall be supported using slings, cable, or rope. Conduits shall be supported in such manner as to maintain alignment with one another.

f- Maximum distance between support points shall be four (4) feet.

g- To prevent inadvertent over bending of the cables, the maximum vertical or horizontal offset between supports shall be one foot (1') for cable that is supported outside of conduit. For cable that is being moved while still installed in conduit, the conduit shall not be offset more than one foot per four-foot section of conduit.

h- Each set of cables (cables from one duct/conduit) shall be moved individually. Cables from multiple ducts/conduits shall not be moved as a bundle.

i- Relocation of cables shall be performed in a careful manner with the movement of cable under complete control at all times. There shall be no sudden movements of the cable or the conduit that contains cable.

j- An observer shall be positioned so as to determine proper slack in structures and to ensure that joints remain properly supported on rack arms and specified offsets are maintained. This observation shall be performed from outside of the structure while the cable is being moved.

k- Allowable horizontal and vertical offsets shall be determined based on applicable CET or JB item sketches and/or as directed by the authorized Con Edison Inspector.

l- Cables shall not be permitted to fall freely from temporary supports.

m- All cables supported by slings shall be visually inspected at the beginning and end of each work shift to ensure that no cracks, leaks, or other defects have developed.

n- Cables shall be repositioned with care when being moved into their final position for the installation of split conduit.

4.7.1 Personal Protective Equipment

Municipal Contractor personnel moving Con Edison energized cables shall refer to and comply with applicable OSHA requirements regarding the use of Personal Protective Equipment when performing this work. See Section 3.9 for Matrix on Con Edison's Personal Protective Equipment Guideline.

5.0 <u>Breaking Out a Point of Entry (POE's) in an Electrical Enclosed Space</u>

5.1 Activities Prior to creating POE's

5.1.1 Prior to creating POE's, the location of all conduit and cable passing through the section of the wall shall be visually identified and protected inside structure.

5.1.2 If any cables are required to be moved prior to creation of a POE, they shall be moved by properly trained and qualified Con Edison electrical personnel.

5.2 Creation of POE Operations

5.2.1 Using caution, expose the exterior section of the wall that you intend to create the POE (typically done in 2' – deep vertical sections) by carefully excavating on the outside of the structure.

5.2.2 When there is a potential for contact between the existing cables that have been visually identified and the tool being used to break out the POE, protect the cables using fire rated wood, phenolic board, cable shields or other acceptable non-conductive materials. Along with protecting the cable from coming in contact with the implement being used for breaking, cables on the walls in the POE area shall also be protected from falling debris using FR wood even if there is no potential for contact with said cables.

5.2.3 Once the following conditions have been satisfied:

5.2.3.1 Location of cables inside the structure and the associated conduit outside have been verified.
5.2.3.2 Protection of cable on both the inside and the outside of the structure walls
5.2.3.3 Structural integrity of the proposed POE area has been confirmed using hand tools

Then use the appropriate tool (up to and including a 90 lb. jackhammer) to create the POE on the section of structure wall that was previously prepared.

5.2.4 If a jackhammer is being used for the POE breakout operation, where feasible, support the tool from underneath to prevent slippage.

5.2.5 Where possible, the use of a 90 lb. jackhammer shall be avoided within 8" of a live conduit. If the competent person determines that the breakout can only be made using a jackhammer within 8" of live conduit, a physical barrier must be placed between the jackhammer and all facilities that could possibly come in contact with the jackhammer. The Municipal Contractor may then begin utilizing the 90 lb. jackhammer using a 3" bit or wider.

JB-18

JB 350 – OVERHEAD ACCOMMODATION PROTECTION OF OVERHEAD FACILITIES, POLES, AND APPURTENANCES

A. Description

The Contractor shall provide all supervision, labor, materials, tools, equipment, and incidentals required to perform its work in the presence of all overhead utilities, including, but not limited to, Electric Facilities (primary, secondary, and service connections), telephone facilities, cable television facilities, fiber optic communications facilities, utility poles, and equipment on the poles and related appurtenances. These utilities are subsequently referred to in this specification as “overhead facilities.” Utility pole supports under JB 351 are not included in this specification.

B. Materials – N/A

C. Method of Construction

The Contractor shall inspect the site prior to bidding and shall utilize sketches JB-350A-1, JB-350B-1, and JB-350C-1 to evaluate the potential impact, if any, of all overhead facilities upon performance of the work. The Contractor shall employ a method of operation, including use of appropriate equipment and tools, that will enable them to maintain adequate clearances from the overhead facilities during all phases of construction. The Contractor is responsible for performing the work in accordance with all applicable Federal, New York State, and Local regulations. The Contractor and/or their agents shall be solely responsible for damages to any overhead lines and appurtenances due to failure to comply with applicable rules, procedures, and practices.

D. Method of Measurement

The quantity to be measured for payment shall be a lump sum measurement to complete the work in the presence of all overhead facilities (Con Edison, Verizon, Charter, Altice, etc.). In taking measurements for estimating purposes of the lump sum, the following must be taken into consideration:

The contractor is responsible for reviewing and verifying all field conditions prior to bidding and again prior to mobilization. Variations in sag, service drops, or attachments that are reasonably expected due to weather, utility maintenance, or seasonal shifts shall not constitute grounds for additional payment. These expectations shall be incorporated into the lump sum estimate and addressed through means and methods appropriate to the field conditions at the time of construction.

E. Price to Cover

The price shall be a lump sum for all supervision, labor, materials, tools, equipment, and incidentals required to perform the work in the presence of all overhead utilities and to maintain adequate clearance from all overhead facilities during all phases of construction. The price includes, but is not limited to, modification of any methods of operation, use of appropriate

equipment, maintenance of traffic, extended performance, loss of productivity, protective measures, delays, change in sequencing and scheduling, and any other costs that may be incurred by the Contractor to maintain adequate clearances from the lowest overhead facilities as well as maintaining all required clearances for the various utility overhead cables, poles, equipment, and appurtenances. Items include any associated tree pruning & removal.

Note: protective measures do not include the installation of line guards (sleeves). Contractor must notify the facility operator at least 30 days before construction to request line guards.

The price shall also cover the lowering and raising of pile driver boom under Con Edison, Verizon, Altice, and Charter mainline cables only. Verizon service wires will be disconnected and reconnected by Verizon for any pile driving operations only. The contractor shall work under the Con Edison, Verizon, Charter, Altice, etc. service wires under all other work operations. The locations of the mainline cables are shown on the utility plates/sketch. The price shall include disconnecting and reconnecting, by the contractor, the impacted Altice or Charter coax service wires for the pile operation. Altice forces to disconnect/reconnect fiber optic service crossings where applicable.

Nothing shall preclude any private utility (including Empire City Subway, Verizon, Con Edison, Charter, Altice, and others) from adding to, rearranging, or removing any of its telecommunication or other infrastructure as needed to maintain service for its customers. Contractors shall provide access to these utilities' employees, agents, consultants, and contractors to perform such specialty work, provided that such access is coordinated in advance with all affected utilities to prevent conflicts with active construction or infrastructure modifications. Access and performance of such work shall be covered under this item.

Any overhead work associated with allowing private utilities access to active and/or inactive job sites for pole relocations (installation and/or removal of poles), facility transfers, and other modifications related to pole relocation work shall be included in this item. For work affecting electric overhead infrastructure, coordination with Con Edison shall be required to ensure compliance with clearance requirements and system integrity.

When pole relocations are required as part of city contract work (e.g., new curb line installation), such relocations shall be performed in coordination with all utilities sharing the affected infrastructure. Con Edison shall evaluate the impact on electric overhead facilities and provide any necessary adjustments to maintain system reliability and safety. Any incremental cost associated with the coordination of city work and overhead work shall be covered under this item, with cost-sharing responsibilities determined based on utility-specific ownership of the affected infrastructure.

Contractors shall not be eligible for additional compensation for routine or minor deviations in overhead utility conditions—including, but not limited to, changes in wire sag, drop counts, attachment height, or pole spacing—provided the overall scope remains materially consistent with the bid documentation and field conditions verified at the time of bidding.

Contractors are responsible for verifying existing overhead utility conditions prior to bidding and again before mobilization. Reasonable differences observed during construction shall not be grounds for additional compensation.

The Contractor shall employ a method of operation, including use of appropriate equipment and tools, that will enable them to maintain adequate clearances from the lowest overhead facilities or maintain the required clearances during all phases of construction.

Note: This lump sum is intended to cover routine and unexpected conditions associated with overhead infrastructure. Contractors shall not be eligible for additional compensation due to:

- Normal sagging or tension changes in overhead wires
- Minor field deviations in attachment height or service drop location
- Seasonal or environmental shifts affecting pole lean or span arc

Contractors must verify all field conditions prior to bidding and again before mobilization. These observations shall inform their pricing and methods. Refer to Section D (Method of Measurement) and Section E (Price to Cover) for full criteria on material changes.

JB-350 Series: Overhead Utility Interference General Scope

Description:

All JB-350 Overhead Utility interference is represented as a lump sum to account for the presence of overhead utility infrastructure during excavation, installation, and restoration activities on City capital projects. This lump sum applies to work affected by overhead electric, telecom, cable, and fiber optic facilities — whether in crossing, parallel, or conflict zones. This lump sum covers coordination and construction methods adjusted to maintain safe clearance and uninterrupted utility service.

Note: This is intended to cover routine and unexpected conditions associated with overhead infrastructure. Contractors shall not be eligible for additional compensation due to:

- Normal sagging or tension changes in overhead wires
- Minor field deviations in attachment height or service drop location
- Seasonal or environmental shifts affecting pole lean or span arc

Contractors must verify all field conditions prior to bidding and again before mobilization. These observations shall inform their pricing and methods. Refer to Section D (Method of Measurement) and Section E (Price to Cover) for full criteria on material changes.

F. References

1. New York City DDC Protocol for Implementation of Working Near Con Edison Energized Overhead Electric Distribution Systems.
2. Con Edison Overhead Electric Condition Report included with contract plans.
3. Guidelines for Working Near Con Edison Energized Overhead Electric Distribution Systems.
4. Copy of the OSHA Letter dated August 9, 2004.
5. Sketch JB-350A-1.
6. Sketch JB-350B-1.
7. Sketch JB-350C-1.

Consolidated Edison Company of New York
Guidelines for Working near Energized Overhead Electric Distribution Systems

Disclaimer: In all cases no guidance given within this document is intended to replace, conflict with, or override any current OSHA, Federal, State, or local laws, rules and regulations. In the event of a conflict between this document and any such law, rule, or regulation, the law, rule, or regulation must be followed. This document is only a general guideline and should not be used as the sole procedure to allow construction operations to proceed around energized overhead electric distribution facilities. The information provided shall be used by the Contractor to determine the appropriate methods for construction on each project. All work must be coordinated with Con Edison to ensure proper implementation of safety measures, clearances, and protective actions for overhead electric facilities.

Purpose
To provide additional guidance to facilitate the coordination and performance of New York City Department of Design and Construction projects that are performed in areas serviced by Con Edison overhead electrical distribution systems.

Con Edison retains the authority to issue stop-work orders in cases where contractors failed to adhere to clearance requirements, protective measures, or coordination protocols.

Introduction
This General Guideline Document contains practices for working near energized Con Edison overhead electrical system conductors or equipment. It applies to construction operations that could cause employees or equipment to contact or enter dangerous proximity to energized overhead electrical systems.

When working near energized overhead electrical lines or equipment, appropriate measures shall be employed to maintain required clearances and avoid contact with such lines or equipment.

Contractors must notify Con Edison at least 30 days in advance of any work that could affect its overhead electric distribution system to allow for proper planning and coordination. This notification shall include a detailed description of planned work, anticipated proximity to overhead conductors, and proposed safety measures.

General Assumptions
Two important assumptions must always be made:

1) Overhead electric lines are “live”(energized); and
2) They carry 50 volts or more.

Electrical lines can only be considered “dead” (de-energized) when verified as such, by Con Edison. Verification of de-energization must be performed by a qualified Con Edison representative before any work is allowed within the standard clearance distances. No work may commence near overhead lines unless written confirmation of de-energization is provided by Con Edison.

Notification Requirements
When there is any question about the nature, type, voltage and location of energized electrical lines or equipment within the geographical limits of the NYC DDC project work, Con Edison must be notified in advance of the work.

Under no circumstance shall the contractor be permitted to connect or tie off other utility cables and wires, such as telephone, cable TV, and fire alarm, to Con Edison overhead facilities.

Contractors shall provide detailed work plans, including any proposed temporary utility connections, at least 30 days prior to construction to ensure compliance with Con Edison safety protocols.

Con Edison Overhead Electrical Distribution Systems
The Con Edison overhead electric distribution system consists of two voltage classifications. They are the Primary System and the Secondary System.

- Primary System has voltages in excess of 2,000 volts AC between any single conductor and ground, and a voltage differential greater than 4000 volts between any pair of conductors.
- Secondary systems have voltages ranging from 120 volts to 477 volts and typically power streetlights, traffic signals, and to customer premises.

Primary Systems
Primary system conductors are found at the upper part of the poles and are connected to step down transformers that provide lower secondary system voltage to customers.

- The primary conductors may be covered or uncovered (bare) wire.
- The covering that may be present is designed to provide system protection against incidental contact with nearby trees but is not intended to offer any personal protection or insulating value against electrical hazard.
- Con Edison considers this cable "un-insulated" for the purpose of providing safe working distances and protection of personnel or equipment.

Therefore, no personnel or equipment shall come within 10 feet of the closest conductor.

Prior to the commencement of the work, Con Edison must verify and classify all primary conductors to determine whether they are bare conductors, insulated aerial cables, or other variations. Contractors shall request this verification in writing at least 30 days in advance of any construction activities.

The other type of primary overhead electrical distribution system that Con Edison operates utilizes an "aerial cable". This cable is underground type cable that is installed on messenger wire, is electrically insulated, and has an exterior metallic sheath that is grounded. The contractor should maintain a clearance of 3 feet from these facilities.

Secondary Systems
Secondary systems throughout the Con Edison service area are typically 120 volts per conductor.

- These conductors are normally found on poles above the telephone cables and cable TV wires.

- They provide power to customer service points through several configurations that may consist of single or multiple conductors.

The secondary systems and the service connections ("service drops") may have cables that are covered or uncovered. Precautions similar to those employed for primary conductors shall be utilized. All efforts shall be made to maintain a clearance of 10 feet around these wires, unless approved conductor protection (line guards) is installed and a 3-foot minimum clearance can be obtained.

Con Edison must review and approve any proposed modifications to clearance distances before construction begins. No work shall be permitted within the 10 foot clearance zone unless specifically authorized by Con Edison in writing.

Primary and Secondary Risers
The contractor may encounter locations where there is a transition of cable systems from overhead to underground. These conductors are insulated and are housed in conduit that acts as a barrier. In these cases, the contractors' personnel and equipment are to avoid contact with these facilities.

For additional protection, physical barriers must be installed around primary and secondary risers if construction occurs within 3 feet of these facilities. The type and installation of such barriers must be approved by Con Edison prior to work commencement.

Closer Approach Distances
Primary Systems – Each project will include a Condition Report/Drawing that will specifically state the maximum approach distances and the methods to be employed by Con Edison to permit these closer approach distances. Methods may include providing adequate temporary insulation, de-energizing, or relocation of the wires, or a combination of any of the three alternatives. If the installation of temporary insulation is the selected alternative, the temporary insulation will have a design value that will be commensurate with the voltages involved. The contractor will be required to maintain a maximum working distance whenever physically possible, but no less than 3 feet as a minimum. The 3 feet minimum is intended to provide a "margin of safety" for operator error. Should the condition report not permit closer approach distances, then the contractor will be required to maintain the aforementioned 10-foot clearance.

For primary system conductors operating at 33kV, the required clearance shall be strictly enforced at a minimum of 10 feet, unless additional protective measures such as de-energization or temporary relocation are implemented. Contractor shall not work within this clearance zone without prior coordination with Con Edison

Secondary Systems and Services - Each project will include a Condition Report/Drawing that will specifically state the maximum approach distances and the methods to be employed by Con Edison to permit these closer approach distances. If it is ascertained that the wires are covered with intact insulation, an exclusion zone of 3 feet will be established. This zone will be established as a "margin of safety" to preclude contact between the contractor's equipment and the secondary/service conductor. Under no

circumstances shall the contractor personnel or equipment come in contact with the wires. Should the condition report not permit closer approach distances then the contractor will be required to maintain the aforementioned 10-foot clearance.

Any decision to reduce clearance distances must be reviewed and approved by Con Edison's supervision. If temporary insulation is used, it must be rated for this specific voltage conductor and installed by qualified personnel under Con Edison’s supervision.

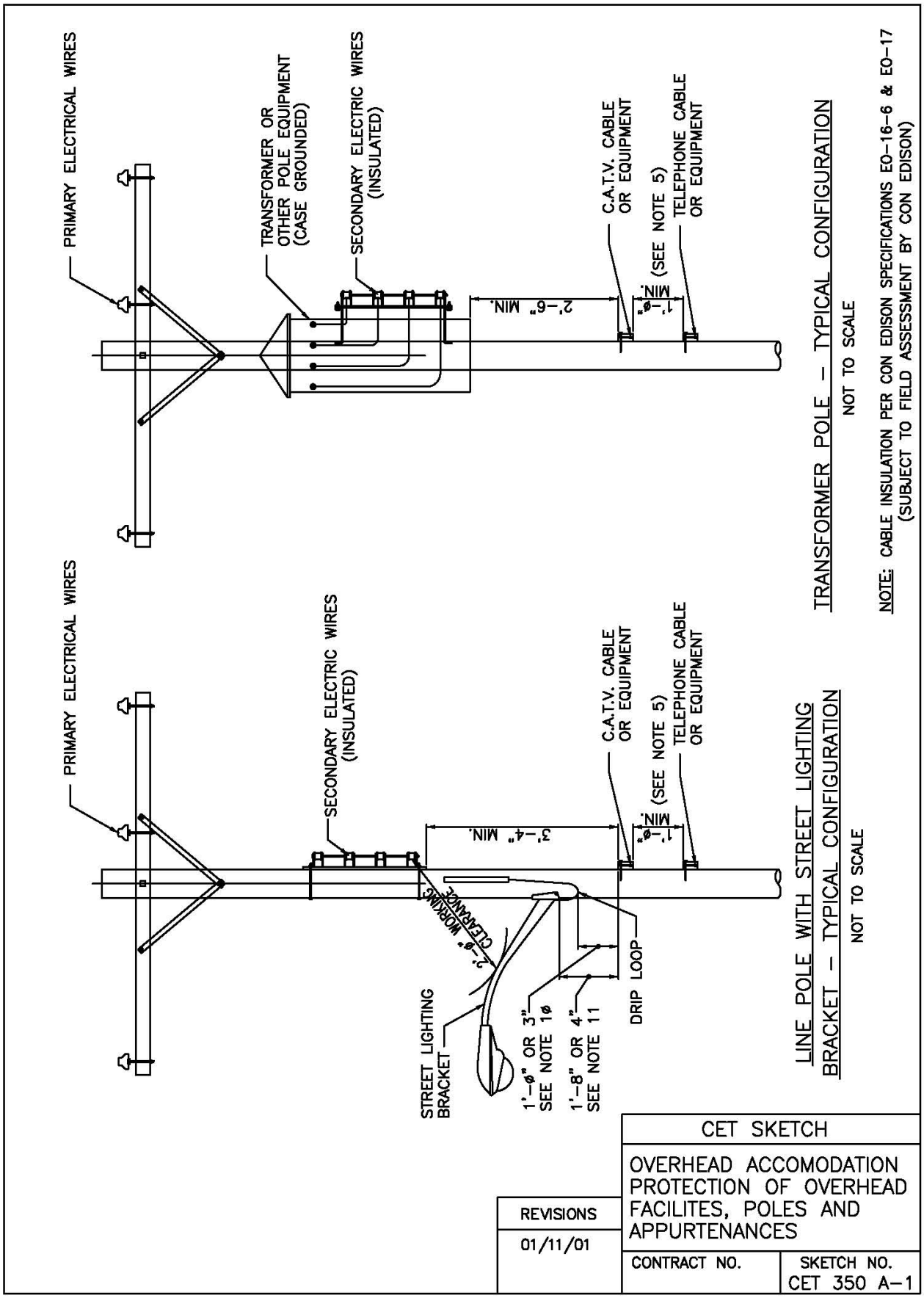
PRIMARY ELECTRICAL WIRES
TRANSFORMER OR OTHER POLE EQUIPMENT (CASE GROUNDED)
SECONDARY ELECTRIC WIRES (INSULATED)
2'-6" MIN.
1'-0" MIN.
(SEE NOTE 5)
C.A.T.V. CABLE OR EQUIPMENT
TELEPHONE CABLE OR EQUIPMENT
TRANSFORMER POLE - TYPICAL CONFIGURATION
NOT TO SCALE
NOTE: CABLE INSULATION PER CON EDISON SPECIFICATIONS EO-16-6 & EO-17 (SUBJECT TO FIELD ASSESSMENT BY CON EDISON)
PRIMARY ELECTRICAL WIRES
SECONDARY ELECTRIC WIRES (INSULATED)
3'-4" MIN.
1'-0" MIN.
(SEE NOTE 5)
C.A.T.V. CABLE OR EQUIPMENT
TELEPHONE CABLE OR EQUIPMENT
2'-0" WORKING CLEARANCE
STREET LIGHTING BRACKET
1'-0" OR 3" SEE NOTE 10
1'-8" OR 4" SEE NOTE 11
DRIP LOOP
LINE POLE WITH STREET LIGHTING BRACKET - TYPICAL CONFIGURATION
NOT TO SCALE
CET SKETCH
OVERHEAD ACCOMODATION PROTECTION OF OVERHEAD FACILITES, POLES AND APPURTENANCES
REVISIONS
01/11/01
CONTRACT NO.
SKETCH NO.
CET 350 A-1

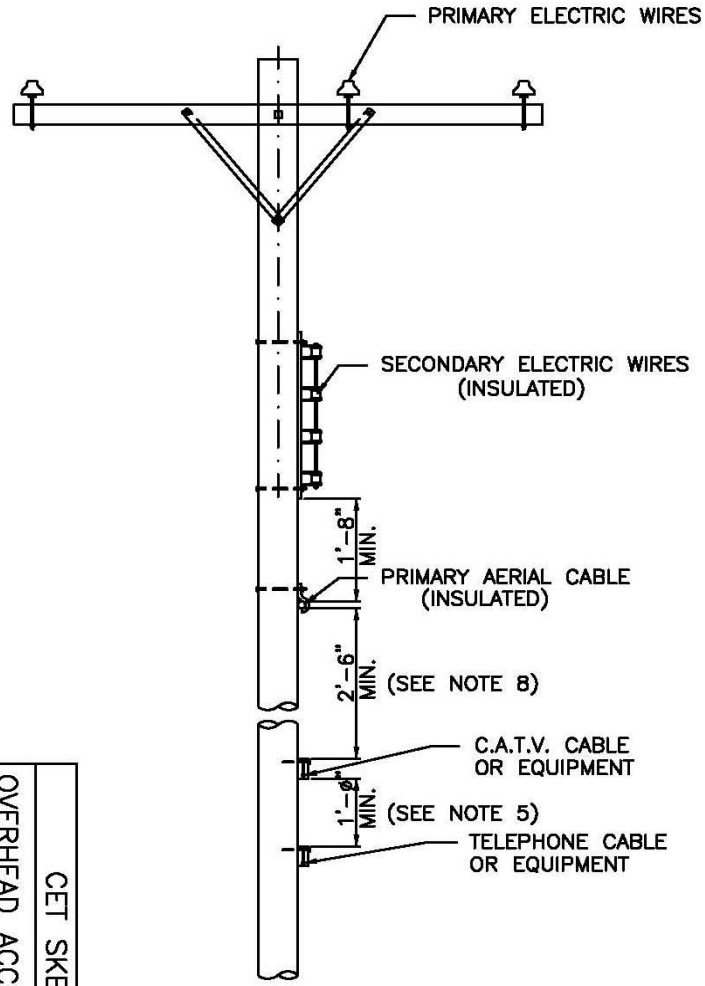

LINE POLE
TYPICAL CONFIGURATION
NOT TO SCALE

NOTES:

1. ALL CLEARANCES ALSO APPLY TO ARMLESS CONSTRUCTION.
2. WHERE PRIMARY AERIAL CABLE IS INSTALLED, MAINTAIN 2'-6" MIN. CLEARANCE BETWEEN THIS PRIMARY CABLE AND C.A.T.V. FACILITIES.
3. C.A.T.V. RISERS NOT ALLOW ON POLES WHERE POWER OR TELEPHONE RISERS ARE PRESENT OR PROPOSED.
4. POLE STEPS ARE LIMITED TO POLES CARRYING EQUIPMENT OTHER THAN WIRES. LOWEST STEP SHALL BE 9'-0" ABOVE GROUND.
5. THIS DIMENSION IS IN AGREEMENT WITH BELL SYSTEM MANUAL OF CONSTRUCTION PROCEDURES. WHERE COMMUNICATION EQUIPMENT IS MOUNTED ON BOTH SIDES OF POLE, REFER TO THIS MANUAL FOR REQUIRED CLEARANCE.
6. A 2'-6" SQUARE CLIMBING SPACE SHALL BE PROVIDED TANGENT TO THE POLE AND SHALL BE KEPT CLEAR OF SERVICE DROPS. ITS HEIGHT AND DEPTH SHALL EXTEND AT LEAST 3'-4" ABOVE AND BELOW ANY COMMUNICATION CABLE OR FACILITY. VARIOUS TYPICAL CLIMBING CONFIGURATIONS ARE SHOWN IN BELL SYSTEM MANUAL OF CONSTRUCTION PROCEDURES.
7. ONE CURBSIDE QUADRANT SHOULD BE KEPT CLEAR OF SERVICE DROPS TO FACILITATE POLE REPLACEMENT.
8. MINIMUM MID-SPAN CLEARANCE OF 0'-10" BETWEEN UTILITY AERIAL CABLE AND C.A.T.V.
9. GROUND FOR STREET LIGHT SHALL BE #6 AWG COPPER FROM BOTTOM OF STREET LIGHT BRACKET TO NEUTRAL.
10. 3" IF DRIP IS COVERED BY SUITABLE 1/2 " NON-METALLIC COVERING (STK.NO.596-ø745) WHICH EXTENDS AT LEAST 2" BEYOND THE LOOP.
11. 4" IF LIGHTING BRACKET IS EFFECTIVELY GROUNDED AND DRIP LOOP IS COVERED BY A SUITABLE 3/4 " NON-METALLIC COVERING (STK.NO.596-ø737).
12. CABLE INSULATION PER CON EDISON SPECIFICATIONS EO-16-6 & EO-17 (SUBJECT TO FIELD ASSESSMENT BY CON EDISON)

CET SKETCH	
OVERHEAD ACCOMODATION PROTECTION OF OVERHEAD FACILITES, POLES AND APPURTENANCES	REVISIONS 01/11/01
CONTRACT NO.	SKETCH NO. CET 350 B-1

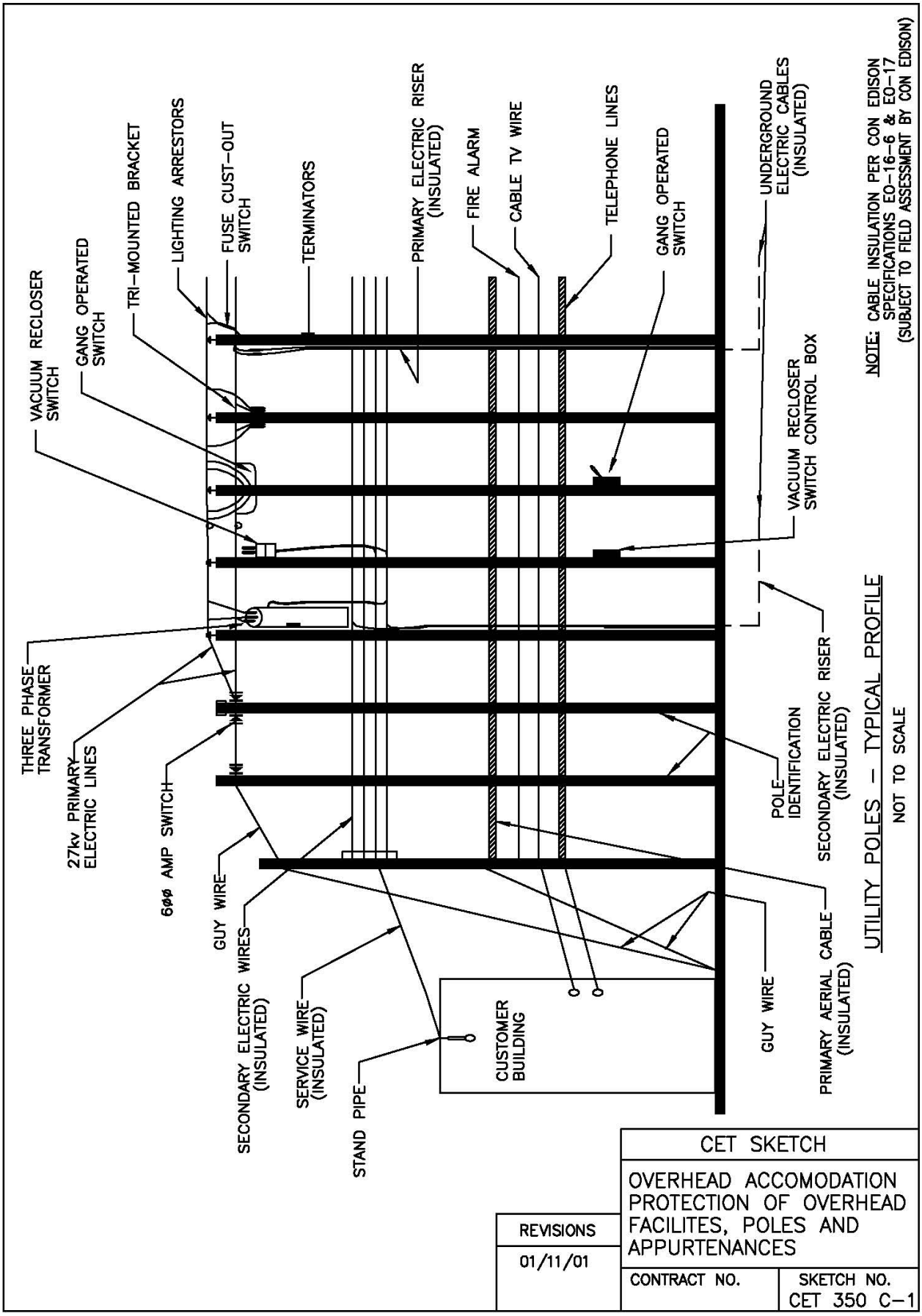
VACUUM RECLOSER SWITCH
GANG OPERATED SWITCH
TRI-MOUNTED BRACKET
LIGHTING ARRESTORS
FUSE CUST-OUT SWITCH
TERMINATORS
PRIMARY ELECTRIC RISER (INSULATED)
FIRE ALARM
CABLE TV WIRE
TELEPHONE LINES
GANG OPERATED SWITCH
UNDERGROUND ELECTRIC CABLES (INSULATED)
NOTE: CABLE INSULATION PER CON EDISON SPECIFICATIONS EO-16-6 & EO-17 (SUBJECT TO FIELD ASSESSMENT BY CON EDISON)
VACUUM RECLOSER SWITCH CONTROL BOX
THREE PHASE TRANSFORMER
27kv PRIMARY ELECTRIC LINES
600 AMP SWITCH
GUY WIRE
SECONDARY ELECTRIC WIRES (INSULATED)
SERVICE WIRE (INSULATED)
STAND PIPE
CUSTOMER BUILDING
POLE IDENTIFICATION
SECONDARY ELECTRIC RISER (INSULATED)
GUY WIRE
PRIMARY AERIAL CABLE (INSULATED)
UTILITY POLES – TYPICAL PROFILE
NOT TO SCALE
CET SKETCH
OVERHEAD ACCOMODATION PROTECTION OF OVERHEAD FACILITES, POLES AND APPURTENANCES
REVISIONS
01/11/01
CONTRACT NO.
SKETCH NO.
CET 350 C-1

MODIFIED SPECIFICATIONS

The specifications listed below supersede the specifications which are provided withing Section C of the Joint package and are not found within the “JOINT-BIDDING SPECIFICATIONS AND SKETCHES FOR MANHATTAN (Issued: August 1st, 2005)" and the NYCDDC Joint Bid Utility Price List

Specifications	**Superseded Specifications**
VERIZON	
JB 225	JB 225.1A, JB 225.1B, JB 225.2A, JB 225.2B, & JB 225.3A
JB 300	JB 300.1, JB 300.2
JB 306	JB 306
JB 351T	JB 351, JB 352, JB 353
JB 401	JB 401
JB 402T	JB 402T.1, JB 402T.1A, JB 402T.2, JB 402T.2A, JB 402T.J1, JB 402T.J1A, JB 402T.J2, JB 402T.J2A, JB 402T.R1A, JB 402T.R2A, JB 402T.V1, JB 402T.V1A, JB 402T.V2, & JB 402T.V2A
JB 402T.3	JB 402T.3
JB 403T	JB 403T.1 & JB 403T.2
JB 404	JB 404
JB 405	JB 405.1 & JB 405.2
JB 407	JB 407
JB 450	JB 450.1, JB 450.2, JB 450.3, JB 450.4, JB 450.5
JB 500	JB 500
JB 603T	JB 603T.1, JB 603T.2, JB 603T.3, JB 603T.4, JB 603T.5, JB 603T.6, JB 603T.7, JB 603T.8, JB 603T.9
JB 636E	JB 636 EA, JB 636 EB, JB 636 EC, JB 636 ED, JB 636 EE, JB 636 EG, JB 636 EH, JB 636 EI
JB 636M	JB 636 MA, JB 636 MB, JB 636 MC, JB 636 MD, JB 636 ME, JB 636 MG, JB 636 MH, JB 636 MI
JB 638NT	JB 638NT
JB 638RT	JB 638RT
JB 798	JB 798
JB 799	JB 799
JB 800	JB 800
JB 801	JB 801
JB 802	JB 802A, JB 802B
JB 803	JB 803.1, JB 803.2, JB 803.3

JB 225 – INSTALLATION AND REMOVAL OF CATCH BASINS WITH UTILITY INTERFERENCES

A. Description

Under this section, the Contractor shall provide all incremental labor, materials, equipment, insurance and incidentals required to support and/or protect the integrity of utility facilities required during the excavation, installation and removal of catch basins within maximum excavation limits shown on sketch JB 225. This shall include but not be limited to the following types of utility facilities:

1. Conduits
2. Cables
3. Concrete encased conduit duct banks
4. Steel pipes
5. Steam facilities
6. Oil-o-static facilities, and
7. Non-Cost sharing gas facilities

encroaching the catch basin excavation and sheeting lines as described further in this section and attached sketch JB 225.

B. Materials

Furnish slurry fill or backfill as required. All materials used to support and protect utility facilities shall be as indicated on standard Sketches JB 100A, JB 100B, JB 100C, JB 100C-1, JB 100D, JB 100E and JB 100F, contained elsewhere in these specifications, shall be supplied by the Contractor and approved by the facility operator(s).

C. Methods of Construction

The Contractor shall use sheeting methods that permit maintenance, support and protection of all utility facilities covered by this section. It is the intent of this item to support, maintain and protect any and all combinations and configurations of utility facilities located within limits indicated on sketch JB 225. For the construction of Type III catch basins, the spillway shall be constructed in a separate stage where the excavation limits may be waived after the basin structure has been installed and backfilled. Excavation for the spillway shall not exceed 3' beyond the exterior finished surface of the proposed spillway. Excavation method for spillway construction shall be done by hand. Utility facilities located within the catch basin footprint, are not covered by this section and shall be removed or adjusted by the Contractor under other JB items or by facility operator at their own expense. This section shall then cover the adjusted facilities.

Utility facilities located beyond the established maximum payment limits are not affected by work specified and shall not be disturbed during any type of catch basin installation and/or removal. Contractor shall be solely and totally responsible for support, maintain and protect, any disturbances and/or any damages to such facilities at his expense. The facility operator(s) shall identify the locations of all utilities within the contract area as required by New York State Industrial Code Rule 753. As provided by the Rule, the Contractor shall use hand excavation methods (pick

and shovel and/or hand held power tools) directly below the pavement base to expose the facilities and to ascertain the spatial relationships and/or dimensions of these utilities with respect to the proposed excavation. Upon exposing the affected utilities as determined solely by the facility operator(s), the Contractor shall be permitted to proceed with a combination of hand and machine excavation, as appropriate, within a zone of protection whose limit shall be defined as a perimeter located one foot from the outside face of each utility interference.

D. Method of Measurement

The quantity to be measured for payment shall be each basin where utility facilities are located within the limits indicated on sketch JB 225. Utility facilities located within the catch basin footprint shall be removed or adjusted by the contractor under other JB items. This section shall then cover the adjusted facilities. Payment will be made only one time at locations where a new catch basin is to be installed at the same location as a preexisting catch basin as specified on contract drawings. For the purpose of this item, "same location" shall mean within 10ft of the preexisting basin location.

JB 225.1A – Installation and removal of catch basins with utility interferences (EA)

JB 225.1B – Installation and removal of catch basin with utility interference at an additional depth of up to 3 feet (EA)

JB 225.2A – Installation of catch basins with utility interferences (EA)

JB 225.2B – Installation of catch basins with utility interferences at an additional depth of up to 3 feet (EA)

JB 225.3A – Removal of catch basins with utility interferences. This item shall be applied only in situations where the catch basin is being removed and not replaced. This item requires complete removal of the catch basin including the floor. (EA)

E. Price to Cover

For JB items 225.1A & 225.2A – The price shall cover the cost of all labor, material, equipment, insurance and incidentals necessary to completely support and protect and maintain the integrity of the utilities without disruption of service to the customers and in accordance with other types of utility items. The price shall also include the cost of: supports, slings and beams installed for utility support; changes of sheeting method and configuration where necessary to accommodate the utility; a combination of hand and machine excavation within the payment limits specified; the disposal of excess backfill material; the placing of backfill material adjacent to catch basins within the maximum payment limits shown on sketch JB 225; backfilling and compacting around over, under and in between utility facilities; installation and removal of sheeting around facilities; support and protection of utility facilities encountered during construction of the spillway. The price shall also cover any additional excavations including hand and hand and machine excavations under and in between single and multiple facilities; and/or in between utility facilities and other existing structures. The unit price shall be deemed to cover all incremental cost for all labor, material, equipment, and incidentals necessary to excavate, install and/or remove specified catch basins while completely supporting, protecting, maintaining and/or adjusting the catch basin to accommodate the integrity of the encroaching utility facilities without disruption of service to the customers in accordance with the contract documents. All cost to support maintain, protect, and accommodate the integrity of utility facilities shall be deemed included in the price for this item. The price shall also cover all additional restricted excavating, sheeting, backfilling, and

compaction around, over, under, and between utility facilities and all other existing structures and/or newly installed and/or removed catch basin.

For JB items 225.1B and .2B – The price to cover shall include all work as described in price to cover for JB 225.1A and .2A plus installation of the catch basin at an additional depth of up to three feet. Payment for all work herein specified shall be made on a one-time basis only; no payment for work herein specified shall be made for the same area more than one time. Payment will be made only one time if the Contractor elects to install new basins next to existing basins to accommodate their operations. No payment will be made for the removal of the existing basins if performed at a later sequence.

For JB items 225.1A, .1B, .2A, and .2B - if tight sheeting is not utilized for the installation of the catch basin this JB pay item shall be reduced by 60%.

For JB item 225.3A – The price to cover shall include all work as described in price to cover for JB 225.1A and .2A plus the modification of means and methods for the removal of catch basins using hand tools including but not limited to chipping guns and jack hammers when work is performed in the presence of utility facilities within the excavation limits as outlined in sketch JB 225.

Payment for all work herein specified shall be made on a one-time basis only; no payment for work herein specified shall be made for the same area more than one time. Payment will be made only one time if the Contractor elects to install new basins next to existing basins to accommodate their operations. No payment will be made for the removal of the existing basins if performed at a later sequence.

F. References

1. Sketches JB 225, JB 100A, JB 100B, JB 100C, JB 100C-1, JB 100D, JB 100E and JB 100F
2. NYS Industrial Code Rule 753

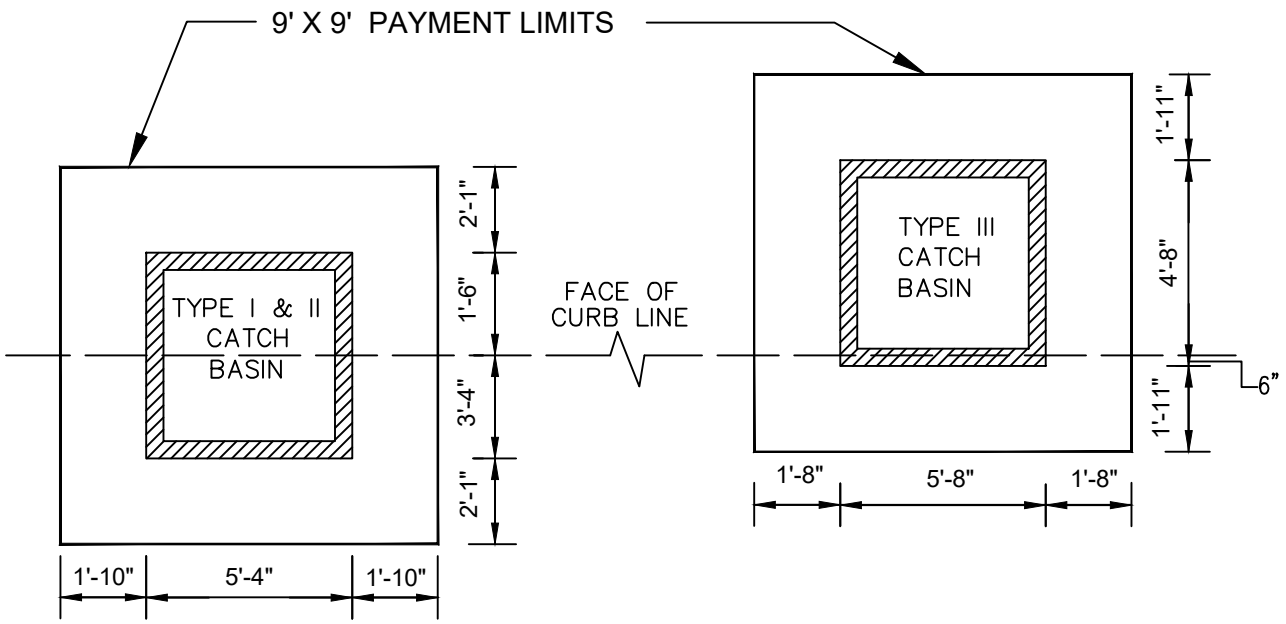

CATCH BASIN ORIENTATION TO CURB LINE WITH PAYMENT LIMITS CONCENTRIC TO BASINS

N.T.S.

JB 225 PAY LIMITS

CATCH BASIN TYPE	DIMENSION TO UTILITY FACILITY PARALLEL FROM FACE OF CURB INTO STREET	DIMENSION TO UTILITY FACILITY PARALLEL FROM FACE OF CURB INTO SIDEWALK	DIMENSION TO UTILITY FACILITY PERPENDICULAR TO CURB FROM FACE OF CATCH BASIN
TYPE I & II TYPE III	3'–6" TO 5'–5" 0'–8" TO 2'–5"	1'–8" TO 3'–7" 4'–10" TO 6'–7"	0'–2" TO 1'–10" 0'–2" TO 1'–8"

NOTES:

FOR EXCAVATIONS GREATER THAN 9'X9', THE CONTRACTOR SHALL SUPPORT ALL UTILITIES AS SPECIFIED UNDER THE VARIOUS ITEMS WITH NO ADDITIONAL COMPENSATION FROM THE IMPACTED UTILITIES. PAYMENT UNDER THIS ITEM SHALL INCLUDE MODIFICATION OF SHEETING METHODS TO SUPPORT UTILITY FACILITIES PARTIALLY WITHIN THE PAYMENT LIMITS SPECIFIED.

ACCOMODATION OF UTILITY FACILITIES DURING CATCH BASIN INSTALLATIONS

LAST REVISION	SKETCH NO.
2/27/2016	JB 225

JB 300 - SPECIAL CARE EXCAVATION AND BACKFILLING

A. Description

Under this section, the Contractor shall provide all incremental labor, materials, equipment, insurance and incidentals required for trench excavation when protecting and maintaining and accommodating the integrity of utility facilities, including but not limited to:

1. Conduits
2. Cables
3. Structures
4. Concrete encased conduit ductbanks
5. Steel pipes
6. Steam facilities
7. Non-cost sharing gas facilities

of various sizes and configurations, encroaching (partially exposed) or paralleling (not exposed) within 6 inches of the approved city trench lines for all phases of contract excavation as shown on contract drawings and/or as encountered during construction, except excavations to the ultimate depth for curbs, sidewalks and roadway/base/sub-base removal which are covered under other JB items. This item shall also apply to facilities that cross excavations for water service installation and extensions or excavations for water tap searches. The items specified under this section shall not be measured for payment in conjunction with any other types of utility items. All work shall be performed in accordance with contract plans, specifications, sketches JB 300A and JB 300B and at the direction of the facility operator(s).

B. Materials – N/A

C. Method of Construction

The Contractor shall maintain and protect and accommodate the integrity of all utility facilities encroaching/paralleling within excavations as schematically shown on sketches JB 300A and JB 300B. The facility operator(s) shall identify the locations of all utilities within the contract area as required by New York State Industrial Code Rule 753. As provided by the Rule, the Contractor shall use hand excavation methods (i.e. pick and shovel or hand held power tools) directly below the pavement base to expose the facilities and ascertain the spatial relationships and/or dimensions of these utilities with respect to the proposed excavation. Upon exposing the affected utilities sufficiently as determined solely by the facility operator(s), the Contractor shall be permitted to proceed with a combination of hand and machine excavation, as appropriate, within a zone of protection whose limit shall be defined as a perimeter located one foot from the outside face of each utility encroaching.

D. Method of Measurement

The unit price for this work item shall be based on the volume (C.Y.) of special care excavation calculated as follows:

- For paralleling facilities (not exposed) within six inches of city trench line: The area for payment shall be measured horizontally from the face of the excavation plus one foot towards the center

of trench and vertically from bottom of the roadway to the bottom of the trench, multiplied by the length of the paralleling utility facility as indicated in sketches JB 300A and JB 300B.

- For encroaching facilities: The area for payment shall be measured horizontally as the width of the encroaching facility plus one foot towards the center of the trench and vertically from the bottom of the roadway to the bottom of the trench, multiplied by the length of the encroaching utility facility as indicated in sketches JB 300A and JB 300B.
- For facilities crossing water service excavations: Depth as defined above multiplied by the width taken as the outside diameter width of structure plus one foot on either side, multiplied by the length of the exposed facility inside the trench.

The volume calculation shall in all cases include, the volume occupied by the utility proper within the payment area described above. Overlapping volume dimensions measured as described above may occur when multiple utilities are encroaching trench excavations. In such cases, all such utilities shall be counted as one utility limited by the maximum encroachment of pipes, conduit(s), and conduit banks faces. The volume shall then be calculated as described above and shown on sketches JB 100E, JB 300A and JB 300B. Utilities identified as abandoned by the facility operator prior to be beginning of excavation, are not included for payment under this item.

JB 300.1 – Special care excavation and backfilling for utility facilities in city trenches less than 5' in depth

JB 300.2 – Special care excavation and backfilling for utility facilities in city trenches 5' or greater in depth

E. Price to Cover

The price shall cover the cost of all labor, material, equipment, insurance and incidentals necessary to completely protect and maintain and accommodate the integrity of the facilities without disruption of service to the customers and in accordance with contract documents. The price shall also include the cost of modifications to typical work methods, including water tap search excavations and the use of such methods as hand excavation around existing single and multiple facilities; backfilling and compaction around, over and under the utilities including the use of special methods, installation and removal of sheeting from around the facilities, and traffic plates that may be required to temporarily close and/or complete the work.

For item JB 300.1 – Depth shall be measured from the bottom of the existing roadway to the bottom of the trench up to a total trench depth of less than 5' measured from top of roadway.

For item JB 300.2 – Depth shall be measured from the bottom of the existing roadway to the bottom of the trench.

If the lowest utility facility is located at a depth less than 5' in a trench greater than 5' deep, then only item 300.1 shall apply. Only one payment for either 300.1 or 300.2 shall apply per trench wall.

F. References

1. Sketches JB 100E, 300A, JB 300B
2. NYS Industrial Code Rule 753

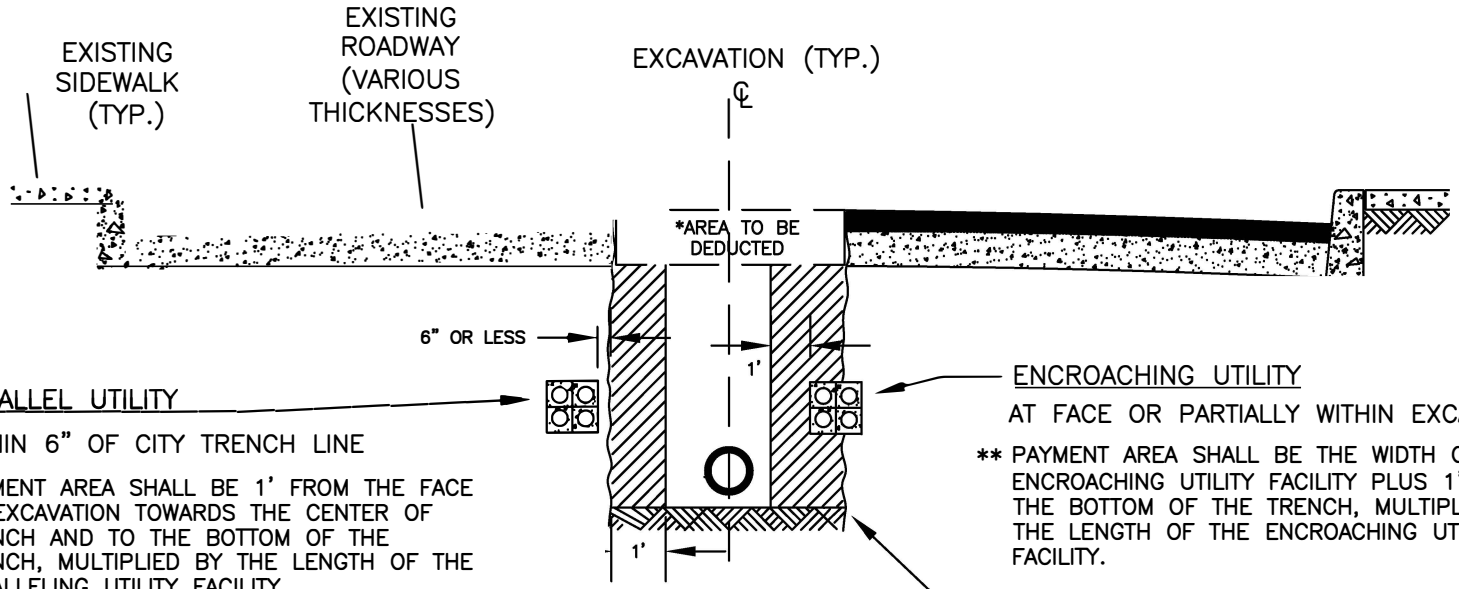

PROFILE

N.T.S.

NOTES:

* VOLUME OF ROADWAY SHALL BE DEDUCTED FROM PAYMENT AREA

** ONLY ONE PAYMENT SHALL APPLY PER TRENCH WALL

PAYMENT AREA

UTILITY PARALLELING/ ENCROACHING IN CITY FACILITY TRENCH LESS THAN 5' IN DEPTH

LAST REVISION 6/30/2015

SKETCH NO. JB 300 A

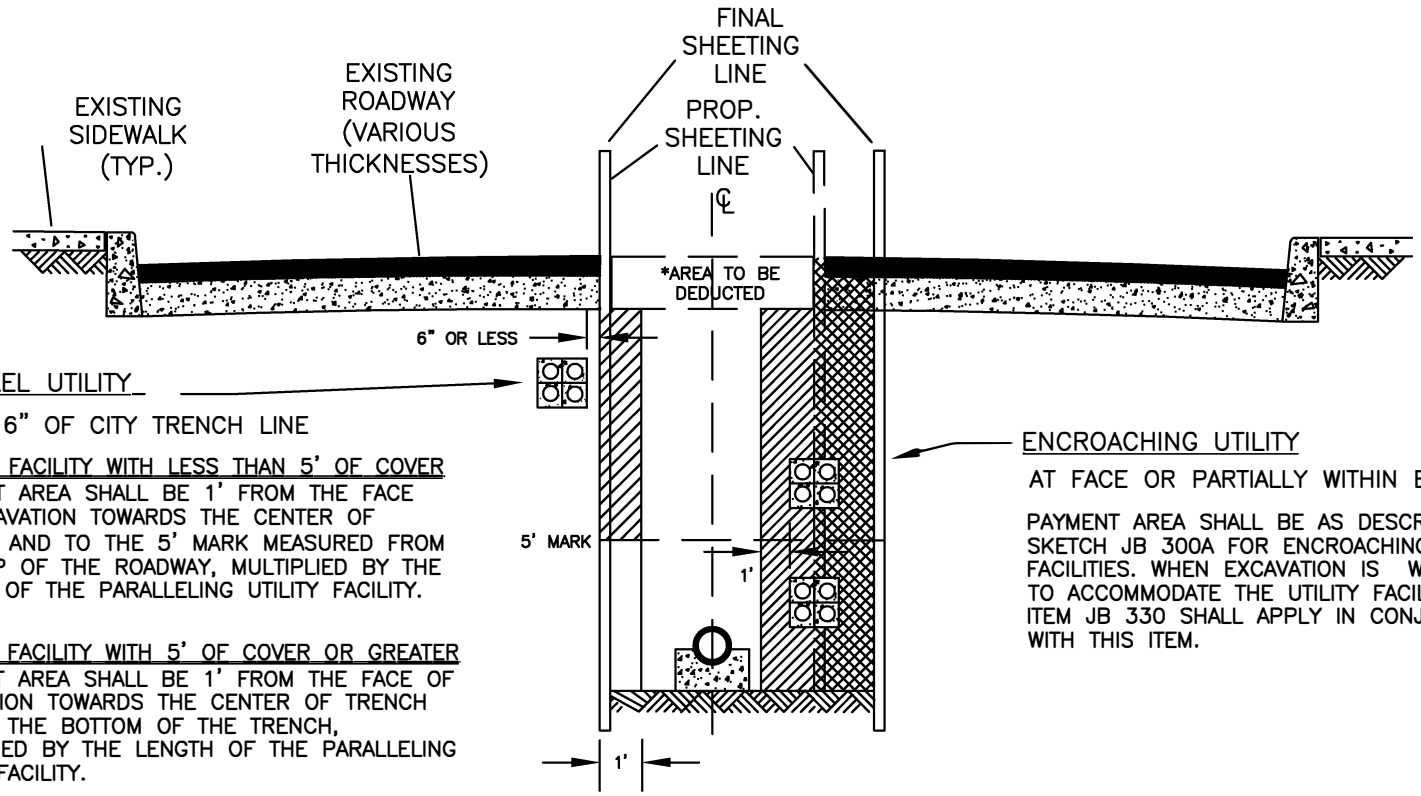

PARALLEL UTILITY

WITHIN 6" OF CITY TRENCH LINE

LOWEST FACILITY WITH LESS THAN 5' OF COVER

PAYMENT AREA SHALL BE 1' FROM THE FACE OF EXCAVATION TOWARDS THE CENTER OF TRENCH AND TO THE 5' MARK MEASURED FROM THE TOP OF THE ROADWAY, MULTIPLIED BY THE LENGTH OF THE PARALLELING UTILITY FACILITY.

LOWEST FACILITY WITH 5' OF COVER OR GREATER

PAYMENT AREA SHALL BE 1' FROM THE FACE OF EXCAVATION TOWARDS THE CENTER OF TRENCH AND TO THE BOTTOM OF THE TRENCH, MULTIPLIED BY THE LENGTH OF THE PARALLELING UTILITY FACILITY.

ENCROACHING UTILITY

AT FACE OR PARTIALLY WITHIN EXCAVATION

PAYMENT AREA SHALL BE AS DESCRIBED IN SKETCH JB 300A FOR ENCROACHING FACILITIES. WHEN EXCAVATION IS WIDENED TO ACCOMMODATE THE UTILITY FACILITY, ITEM JB 330 SHALL APPLY IN CONJUNCTION WITH THIS ITEM.

PROFILE

N.T.S.

ITEM 300 PAYMENT AREA

ITEM 330 PAYMENT AREA

NOTES:

* VOLUME OF ROADWAY SHALL BE DEDUCTED FROM PAYMENT AREA

** ONLY ONE PAYMENT SHALL APPLY PER TRENCH WALL

UTILITY PARALLELING/ ENCROACHING IN CITY FACILITY TRENCH 5' AND GREATER IN DEPTH	
LAST REVISION 10/05/2021	SKETCH NO. JB 300 B

JB 306 - SPECIAL CARE EXCAVATION AND BACKFILLING WITHIN A CITY TRENCH

A. Description

Under this section, the Contractor shall provide all incremental labor, materials, equipment, insurance and incidentals required for trench excavation when protecting and maintaining and accommodating the integrity of utility facilities, including but not limited to:

1. Conduits;
2. Cables;
3. Structures;
4. Conductors;
5. Concrete Encased Conduit Duct banks;
6. Steel Pipes; Steam facilities and
7. Non Cost Sharing Gas

of various sizes and configurations within the city trench. This item shall apply to excavations intended to search and locate utility facilities marked under NYS Industrial Code Rule 753 and not found. The contract items specified under this section shall not be measured for payment in conjunction with any other types of utility items. All work shall be performed in accordance with contract plans, specifications, and at the direction of the facility operator(s).

B. Materials – N/A

C. Method of Construction

The Contractor shall maintain, protect and accommodate the integrity of all utility facilities within excavations. The facility operator(s) shall identify the locations of all utilities within the contract area as required by New York State Industrial Code Rule 753. As provided by the Rule, the Contractor shall use hand excavation methods (i.e. pick and shovel or hand held power tools) directly below the pavement base to expose the facilities and ascertain the spatial relationships and/or dimensions of these utilities with respect to the proposed excavation. Upon exposing the affected utilities sufficiently as determined solely by the facility operator(s), the Contractor shall be permitted to proceed with a combination of hand and machine excavation, as appropriate, within a zone of protection whose limit shall be defined as a perimeter located 12 inches from the outside face of each utility encroaching.

D. Method of Measurement

The unit price for this work item shall be based on the volume (C.Y.) of special care excavation calculated as follows:

- For locating utility facilities as directed by the facility operator which may or may not have marks in the street under NYS Industrial Code 753. The facility operator may at his sole discretion can direct the contractor to continue to excavate under this item to locate facilities outside the zone of protection of the marks as defined by industrial code 753 or if the utility representative has reason to believe an unmarked facility is present.

The volume calculation shall in all cases include, the volume occupied by the utility proper within the payment area described above. Overlapping volume dimensions measured as described above may occur when multiple utilities are encroaching trench excavations. In such cases, all such utilities shall be counted as one utility limited by the maximum encroachment of pipes, conduit(s), and conduit banks faces. The volume shall then be calculated as described above and shown on Sketch JB 300 A. Utilities identified as abandoned by the facility operator prior to be beginning of excavation, are not included for payment under this item.

E. Price to Cover

The price shall cover the cost of all incremental labor, material, equipment, insurance and incidentals necessary to completely protect and maintain and accommodate the integrity of the facilities without disruption of service to the customers and in accordance with contract documents. The price shall also include the cost of: modifications to typical work methods, loss of productivity due to slower rate of excavation including the use of such methods as hand excavation around existing single and multiple facilities; backfilling and compaction around, over and under the utilities including the use of special methods.

For item JB 0306 – Depth shall be measured from the bottom of the existing roadway to the bottom of the trench or the top of the utility facility (whichever is less). This item cannot be paid in conjunction with JB 100-116 for the same utility within the same excavation.

F. References

1. NYS Industrial Code Rule 753

JB 351T - UTILITY POLE SUPPORTS

A. Description

This section describes the temporary supports for utility poles at locations directed by the facility operator(s) in consultation with the Resident Engineer, in order to maintain such poles in their existing upright position without disturbing attached wires and equipment. The Contractor shall provide all labor, material, equipment, insurance, and incidentals required to construct, install and maintain an effective support system that will meet the stated objective.

B. Materials

All materials required to construct and maintain an effective support system shall be supplied by the contractor and approved by the facility operator.

C. Method of Construction

Where directed by the utility representative, the Contractor shall furnish, install and remove utility pole supports and maintain utility poles as shown on Sketch JB 351. Alternate methods proposed by the Contractor will be permitted if approved by the facility operator.

D. Method of Measurement

The quantity of utility pole supports to be measured for payment shall be the number of utility poles supported. The Contractor will be paid only once for each utility pole supported and maintained no matter how many different construction operations have an impact on the pole.

E. Price to Cover

The price shall cover the cost of all labor, material, equipment, insurance, and incidentals necessary to furnish, install, maintain and remove utility pole supports to completely support, maintain, protect, and accommodate the integrity of utility poles without disruption of service to customers. The price bid shall also include all additional impact cost associated with working around utility pole supports, poles and appurtenances.

F. References

1. Sketch JB 351T

METHODS OF SHORING UTILITY POLES

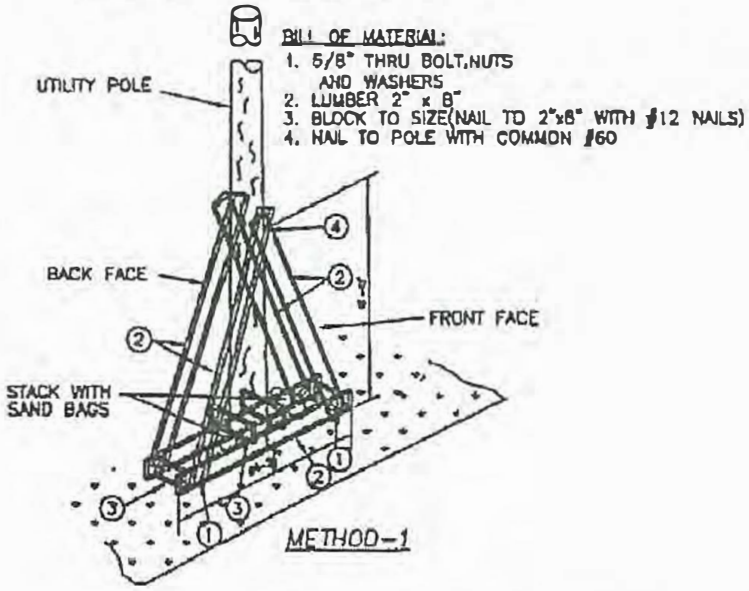

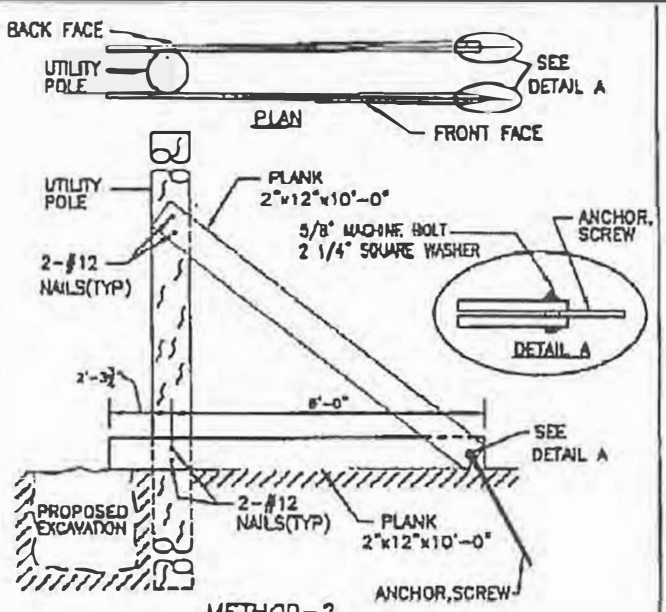

METHOD-2
(FRONT FACE SHOWN,BACK FACE OPPOSITE HAND)

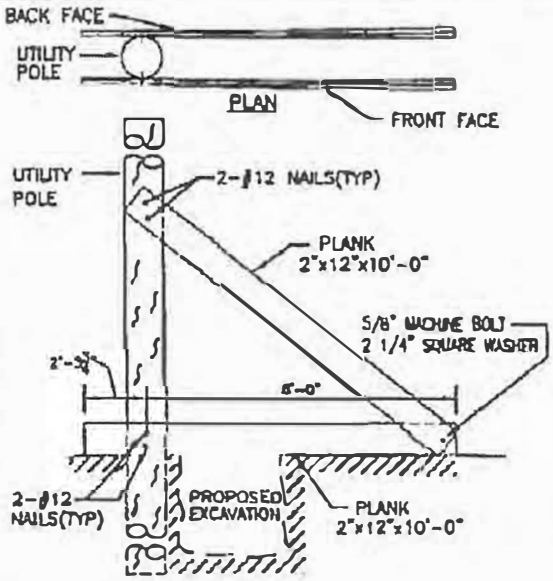

METHOD-3
(FRONT FACE SHOWN,BACK FACE OPPOSITE HAND)

NOTES:

1. THESE METHODS OF SHORING ARE GENERAL GUIDES. FIELD CONDITIONS WILL DICTATE WHICH METHOD WILL BE USED.VARIATIONS OF THESE METHODS WHICH ACCOMPLISH THE SAME PURPOSE MAY ALSO BE UTILIZED WHEN APPROVED BY OVERHEAD CONSTRUCTION DEPARTMENT.
2. ANY INFORMATION NOT SHOWN WILL BE DETERMINED IN THE FIELD TO SUIT THE FIELD CONDITIONS WHEN APPROVED BY THE OVERHEAD CONSTRUCTION DEPARTMENT.

REVISIONS
3/7/18

JB SKETCH	
METHODS OF SHORING UTILITY POLES	
CONTRACT NO.	SKETCH NO. JB 351T

JB 352 - SPECIAL CARE OPERATIONS FOR TREE REMOVAL

A. Description

Under this section, the Contractor shall be required to modify work methods of tree removal in order to maintain, protect and accommodate the integrity of overhead utility lines where existing, as directed by the utility operator.

B. Materials – N/A

C. Method of Operation

The Contractor shall exercise extreme caution when removing trees where their sway during removal might cause damage to overhead electric and telephone utility lines, as determined by the utility operator. Exercising extreme caution shall mean the careful clearing of branches over, under and around overhead electric utility lines prior to removal of trees and the topping of trees as may be necessary to avoid damage to utility lines.

All equipment, methods, and maintenance and protection provisions shall require full authorization by the utility operator. The Contractor is warned that overhead utility lines are electrified and require equipment used in their vicinity to be isolated from the ground.

D. Method of Measurement

The quantity of "Special Care Operations for Tree Removal" to be measured for payment shall be each (EA.) tree actually removed during the Contract in accordance with these specifications.

E. Price to Cover

The prices for "Special Care Operations for Tree Removal Work" shall be a unit price for all tree size groups, equal to the incremental cost difference of all labor, materials, equipment, insurance, and incidentals required to maintaining, protecting, and accommodating the integrity of existing overhead utilities during the performance of tree removal operations (under Contract Item 4.16AA, 4.16AB, 4.16 AC, 4.16 AD, 4.16 ADE or 4.16 AE) where the felling of said tree may cause damage to existing overhead utility lines as determined by the utility operator(s); all in accordance with the plans, the specifications and the directions of the utility operator(s).

Payment for all work specified herein shall be made separately by each utility that is affected by the tree removal and shall be on a one-time basis only.

F. References

N/A

JB 353 - SPECIAL CARE OPERATIONS FOR TREE PRUNING

A. Description

Under this Section, the Contractor shall be required to modify work methods of tree pruning in order to maintain, protect and accommodate the integrity of overhead electric utility lines where existing, as directed by the utility operator.

B. Materials

N/A

C. Method of Operation

The Contractor shall exercise extreme caution when pruning trees where the sway of branches during pruning might cause damage to overhead electric and telephone utility lines, as determined by the utility operator. Exercising extreme caution shall mean the careful pruning of branches over, under and around overhead electric and telephone utility lines so as not to cause damage to existing utility lines.

All equipment, methods, and maintenance and protection provisions shall require full authorization by the utility operator. The Contractor is warned that overhead utility lines are electrified and require equipment used in their vicinity to be isolated from the ground.

D. Method of Measurement

The quantity of "Special Care Operations for Tree Pruning" to be measured for payment shall be each (EA.) tree actually pruned during the Contract in accordance with these specifications.

E. Price to Cover

The contract prices bid for "Special Care Operations for Tree Pruning" shall be a unit price for all tree size groups, equal to the incremental cost difference of all labor, materials, equipment, and incidentals required to maintaining, protecting, and accommodating the integrity of existing overhead utilities during the performance of tree pruning operations (under Contract Item 4.18 A, 4.18 B, 4.18 C or 4.18 D) where the pruning of said trees may cause damage to existing overhead utility lines as determined by the utility operator; all in accordance with the plans, the specifications and the directions of the facility operator.

Payment for all work specified herein shall be made separately by each utility that is affected by the tree pruning and shall be on a one-time basis only.

F. References

N/A

JB 401 - TRENCH EXCAVATION FOR ADJUSTMENT OF UTILITY FACILITIES

A. Description

Under this section, the Contractor shall provide all labor, materials, equipment, insurance and incidentals required to excavate by hand to locate and expose subsurface utilities encountered during construction in preparation for horizontal and vertical movement (covered by other Sections), and to support and maintain and protect the integrity of utility facilities including but not limited to:

1. Conduits;
2. Conductor(s) and/or cable(s);
3. Concrete Encased Conduit Bank(s);
4. Steel Pipe(s)

The trench to be excavated shall be determined by the size of the utility and the extent of adjustment required to avoid interferences as detailed on Sketch JB 402 A during all phases of contract work. The work shall be performed in accordance with the specifications, and at the directions of the facility operator in consultation with the Resident Engineer.

B. Materials

All materials used to support and maintain and protect shall be similar to those indicated on Sketches JB 100 A and 100 A-1 and shall be supplied by Contractor and be approved by the facility operator in consultation with the Resident Engineer.

C. Methods of Construction

The Contractor shall cut, break and remove various thickness of surface and base pavement, excavate by hand to expose, support and protect all utility facilities within the trench and then furnish and tamp backfill after work has been completed by the parties indicated under other Sections. The facility operator(s) shall identify the locations of all utilities within the contract area as required by New York State Industrial Code Rule 753. As provided by the Rule the Contractor shall use hand excavation methods (pick and shovel or hand held power tools) directly below the pavement base to expose the utility. Upon exposing the affected utilities sufficiently to determine relationships and/or clearances at the sole discretion of the facility operator in consultation with the Resident Engineer, the Contractor shall be permitted to proceed with a combination of hand and machine excavation sufficiently to wingback all interferences of cable and conduit. The trench shall be adjusted so as to provide a nominal cover of 24" over the highest conduit. The width of the trench shall be as directed by the facility operator in consultation with the Resident Engineer. The bottom of the trench shall be graded smooth and tamped to minimize initial settlement and to avoid "point" support of conduits. All stones projecting into the trench bottom shall be removed, and the voids backfilled before conduits are placed. Where streets are not to final grade, the cover shall be measured from the final grade, or the existing grade, whichever provides the deeper trench.

D. Method of Measurement

The Contractor shall be paid per cubic yard (C.Y.) of trench actually excavated to the limits directed as detailed in Sketch JB 402 A and to the satisfaction of the facility operator in consultation with the Resident Engineer. When two or more utility facilities requiring horizontal or vertical adjustment with different owners are in the same trench, the facility operators shall jointly determine the percentage of ownership of the trench.

E. Price to Cover

The price for excavation shall include the cost of all labor, materials, equipment, insurance, and incidentals necessary to completely expose, support and protect and maintain the integrity of the facilities without disruption of service to the customers and in accordance with the Contract Documents, associated maintenance of traffic, and traffic plates and sheeting that may be required, cut, break and remove various thickness of surface and base pavement, excavate by hand to expose existing structures, furnish, place and tamp backfill after required vertical and/or horizontal adjustments have been completed under other Sections. Any required removing, trucking, storing, and disposing of material shall be deemed included in the unit price. The price shall also include the cost of providing temporary pavement restoration. Permanent pavement restoration shall be paid under other items. This item shall include cutbacks required for permanent restoration of trenches paid for under other items. The removal of abandoned pipes, conduits structures are covered under other items. The price shall also include the cost of locating and supporting and protecting all utilities encountered including slings and beams installed for utility support when required. The price shall include maintaining the sheeting for the duration of the relocation and work required by the facility operator including but not limited to pipe-ripping covered under JB 402T.

F. References

1. NYS Industrial Code Rule 753
2. Sketch JB 100 A and A-1
3. Sketch JB 402 A

JB 402T - HORIZONTAL AND VERTICAL ADJUSTMENT OF TELECOMMUNICATIONS FACILITIES

A. Description

Under this section, the Contractor shall provide all labor, materials, equipment, insurance and incidentals required to adjust and support and protect and maintain and accommodate the integrity of telecommunication facilities including but not limited to:

1. Conduit(s);
2. Cables and Air Pipe
3. Concrete Encased/Capped Conduit Banks

The work shall be performed in accordance with specifications and at the direction of the facility operator in consultation with the Resident Engineer.

B. Materials

All materials used to adjust and support and protect and maintain and accommodate the integrity of utility facilities shall be similar to those indicated on the standard Sketches JB 100 A & 100 A-1 and shall be supplied by the Contractor and be approved by the facility operator in consultation with the Resident Engineer.

Materials used for replacing conduit(s) removed under this item shall be supplied by and installed by the Contractor and shall include but not be limited to the following:

1. Bends
2. Split and Solid Conduit(s) PVC and Steel
3. Couplings and Adapters PVC, Tile and Steel
4. Straps or plastic ties

PVC conduit and fittings shall be as supplied by American Pipe and Plastics, Type “C” or approved equal.
Steel Pipe and fittings shall conform to ASTM A53 Schedule 40
Tile to PVC adaptors shall be as supplied American U-Tel or approved equal.

C. Methods of Construction

Lengths of “wing-back” shall be determined by the facility operator in consultation with the Resident Engineer. All work performed prior to that approval shall be at the contractor’s risk.

Methods of construction shall include but not be limited to the following:

1 Removal and Support

a. Break with hand held power tools, remove and dispose of plain or reinforced concrete encasement.

b. Break with hand held power tools, remove and dispose of conduit(s) enclosures and conduit that contain conductor(s) and/or cable(s) except steel/Iron conduits, inner ducts and 1 ¼" to 1 ½" PVC "quad ducts. Breaking – "ringing and ripping" - of steel/iron conduits belonging to ECS shall be performed by ECS forces only. Contractor shall make safe the work area to accommodate the ECS forces.

c. Support and protect exposed conduits, cables, innerduct and airpipe as shown in Sketch JB 100A-1 and approved by the facility operator in consultation with the Resident Engineer.

d. ECS tenants cables may require inspection, testing and encapsulation before they can be shifted. Contractor shall make safe the work area to accommodate these forces. Contractor shall be notified by the facility operator of the ECS tenant requirements before the conduits are broken-out.

2 Adjust or Move Conductor(s) and/or cable(s) and support

a. Cable shall be relocated horizontally and/or vertically as directed by the facility operator in consultation with the Resident Engineer

b. Support and protect conductors and/or cables as shown on Sketch # JB 100 A-1 and/or as directed by the facility operator.

3. Replacement, Encasement, Protection and Support

a. Replace vacant and loaded conduit(s) with solid and/or split conduit(s) and adapters.

1) Vacant Conduit - Repairs to conduits shall not be permitted. All damaged or impaired lengths of conduit(s) shall be removed and replaced with new conduit(s). The number of vacant conduits replaced shall be confirmed by the facility operator.

2) Loaded Conduit - Replacement of conduits that are removed from around existing cable(s) or innerduct shall be accomplished with split plastic (PVC) or split steel conduits as directed by the facility operator. Where split and solid plastic or steel conduit is used, the conduit(s) shall be spaced 1½ inches from each other. All split PVC shall be secured with plastic straps spaced at a maximum distance of eighteen (18") inches. Plastic conduit shall be joined with plastic couplings.

3) Adapting - Joining plastic conduit to existing conduits of other diameters or material shall be done using single or multiple adapters, (supplied by contractor).

b. If due to subsurface conditions, the cover is less than 20" from finished grade, the duct shall be protected with steel plates furnished by the contractor and measured for payment under Item JB 403T.

c. Support and protect cable(s) and/or conductor(s) and conduit(s).

d. Verify vacant conduits and provide pull ropes.

e. Encase all exposed conduit with concrete (f'c = 1200 to 1500 psi maximum) with slump commensurate to completely fill voids around conduits. Concrete encasement shall extend to two (2") inches beyond the limits of the duct bank vertically and horizontally.

D. <u>Method of Measurement</u>

The quantity to be measured for breaking out conduits, removing concrete, moving, protecting and supporting conductors and replacing conduits with split and solid conduit, shall be paid for by the linear foot (L.F.) of each conduit replaced. A linear foot of conduit shall be defined as one (1) single conduit measured along its longitudinal axis that has been broken out or moved from its original location either horizontally and/or vertically and measured in its final location. Quad PVC ducts produced as one unit shall be consider one duct for each quad unit. All conduits removed under this section and not restored shall be paid at 60% of the appropriate item in this section.

Multiple tile duct bank with concrete protection cover is not considered concrete encasement.

Each type of utility adjustment shall be paid for separately, the types of utility adjustments are defined as follows:

JB-402T.1 Existing Concrete Encased Non-Steel/Iron Conduits Placed in Final Position without Concrete Encasement. (L.F.)

JB-402T.1A Existing Concrete Encased Non-Steel/Iron Conduits Placed in Final Position with Concrete Encasement. (L.F.)

JB-402T.2 Existing Non-Concrete Encased Non-Steel/Iron Conduits Placed in Final Position without Concrete Encasement. (L.F.)

JB-402T.2A Existing Non-Concrete Encased Non-Steel/Iron Conduits Placed in Final Position with Concrete Encasement. (L.F.)

JB-402T.R1A Existing Concrete Encased Steel/Iron Conduits Placed in Final Position with Concrete Encasement. (L.F.)

JB-402T.R2A Existing Non-Concrete Encased Steel/Iron Conduits Placed in Final Position with Concrete Encasement. (L.F.)

JB-402T.V1 Existing Vacant Concrete Encased Conduits Placed in Final Position without Concrete Encasement. (L.F.)

JB-402T.V1A Existing Vacant Concrete Encased Conduits Placed in Final Position with Concrete Encasement. (L.F.)

JB-402T.V2 Existing Vacant Non-Concrete Encased Conduits Placed in Final Position without Concrete Encasement. (L.F.)

JB-402T.V2A Existing Vacant Non-Concrete Encased Conduits Placed in Final Position with Concrete Encasement. (L.F.)

JB-402T.J1 Existing Concrete Encased Conduits Placed in Final Position without Concrete Encasement. (L.F.) in Which Only Conduit Joints are Broken Out and Conduits Remain Intact.

JB-402T.J1A Existing Concrete Encased Conduits Placed in Final Position with Concrete Encasement. (L.F.) in Which Only Conduit Joints are Broken Out and Conduits Remain Intact.

JB-402T.J2 Existing Non-Concrete Encased Conduits Placed in Final Position without Concrete Encasement. (L.F.) in Which Only Conduit Joints are Broken Out and Conduits Remain Intact.

JB-402T.J2A Existing Non-Concrete Encased Conduits Placed in Final Position with Concrete Encasement. (L.F.) in Which Only Conduit Joints are Broken Out and Conduits Remain Intact.

E. Price to Cover

The unit price bid per linear foot (L.F.) of conduit shall cover the cost of all labor, material, equipment, insurance, and incidentals necessary to shift, adjust, support, protect, maintain and accommodate the integrity of utilities without disruption of service to the facility operator's customers and in accordance with contract documents. The price bid shall also include the cost of: breaking out, removal and disposal of plain or reinforced concrete encasements, conduits (except iron/steel), support of cables/conduits, replacement with field split, split and solid conduits, adapters, clamps, straps and couplings; verify vacant conduits and provide pull ropes; furnish and install concrete encasement, supports, slings and beams for utility support; changes of sheeting method and/or configuration when required and where necessary to accommodate the utilities during all phases of contract work; and removal of sheeting around the utilities, and all else necessary and required to complete the work.
The unit price shall include potential delays and extended performance due to time allowance for the pipe-ripping operations.
The unit price shall include providing access to the facility operator pipe-ripping crews and tenants to verify and test cables before, during and after the pipe ripping operation completed by the facility operator or specialized contractor hired by the facility operator and after conduit removal by the Contractor. The unit price shall include, but not limited to, opening and closing of fences; removal and replacement of temporary timber curb and opening and closing of traffic plates. Access to adjacent manholes impacted by the run is included in this item. JB 450 shall not be used in conjunction with JB-402T as JB-402T covers access to the work site at all times for work required under this item.

F. References

1. Sketches JB 100A and 100A-1
2. JB 403T
3. American Pipe and Plastics, P.O. Box 577, Binghamton, N.Y. 13902
4. American U-Tel, 9760 Smith Rd., Willoughby, Ohio 44094

JB 402T.3 - ACM REMOVAL AND DISPOSAL OF VERIZON/ECS CONDUITS WITH ASBESTOS CONTAINING MATERIAL TRANSITE PIPES (ACM-TP) UP TO AND INCLUDING 4" DIAMETER

A. Description

Under this item the contractor shall provide all labor, equipment, transportation, insurance and incidentals to remove and dispose of asbestos containing material - transite pipe (ACM-TP).

The contractor shall strictly adhere to all environmental requirements and work practices and notifications specified under construction details.

The transite conduits (ACM-TP) to be removed contain active cables and these cables will remain active during the transite conduits removal.

All removal and disposal of ACM-TP shall be done by pre-qualified contractors (or sub-contractors) as specified under method of construction.

B. Materials

The contractor shall supply separate dumpsters to be used exclusively for the removal and disposal of the ACM-TP and all other materials such as bagging, dumpster linings, respirators and filters, enclosures and all other incidental material required for the removal and disposal of the Verizon/ECS ACM-TP in accordance with laws, rules and regulations of Federal, State or local agencies.

C. Method of Construction

a. Work Scope

Removal of concrete encased conduits shall be accomplished by hand held chipping hammers. The removal should be in a pre-identified operation in order to minimize the potential release of airborne asbestos fibers from the ACM-TP.

b. Notification And Variance

Verizon/ECS is required by the New York City Department of Environmental Protection (NYCDEP) to obtain a site specific variance.

The contractor shall prepare the variance application letter and the NYCDEP Form ACP-9 and will submit them to the NYCDEP not sooner than four (4) weeks prior to the start of the ACM-TP removal.

The contractor is responsible for preparing the NYCDEP Form ACP-7 together with NYCDEP Form ACP-9 as the applicant and providing these forms to Verizon/ECS for review and signature prior to submittal to the NYCDEP seven

(7) weeks prior to the commencement of the project (Notice to begin construction).

The contractor shall prepare the New York State Department of Labor (NYSDOL) notification Form DOSH-483 prior to submittal to the NYSDOL at lease four (4) weeks prior to the commencement of the project.

The contractor shall prepare the United States Environmental Protection agency (USEPA) Notification of Demolition and Renovation form for submittal four (4) weeks prior to the commencement of the project.

c. Vendor Prequalification

All subcontracted environmental parties which shall include but not be limited to asbestos abatement contractor, project monitoring firm, air sampling and analytical contractor can be selected from Verizon's currently approved vendor lists. Should the contractor elect to use his own list, that information shall be provided to Verizon/ECS for review/ approval at least four (4) weeks prior to date the ACP-7 form is submitted to Verizon.

d. Waste Transport and Disposal

The ACM-TP that is removed will be disposed of as ACM waste at an asbestos landfill. This landfill site shall be selected from one of Verizon's list of approved disposal sites. The contractor will identify and obtain approval from Verizon for the transporter. The contractor can select one of the Verizon's currently approved transporters, or alternatively select a transporter of its own. Should the contractor elect to use latter, that information shall be provided to Verizon/ECS for review/approval at least 4 weeks prior to the date the ACP-7 is submitted to Verizon.

An original of the asbestos waste manifest is to be provided to the Verizon/ECS representative for all shipments that leave the work site. A signed copy (by the selected landfill) of the waste manifest is to be provided to Verizon/ECS not later than 10 days from the date the shipment leaves the site.

e. Exhibits

The forms are a component part of this item.

1-NYCDEP Form ACP-7
2-NYCDEP Form ACP-9R1
3-NYSDOL Form DOSH-483
4-USEPA - Notification Form

f. Work Plan

1. For this item the contractor must submit to Verizon/ECS for review and approval a detailed site specific work plan.

2. The contractor must submit to Verizon/ECS for review and approval any alternate proposals for variance requested from Regulatory Statutes (NYSDOL & NYCDEP).

3. The contractor shall provide all sampling and laboratory analysis required under the Industrial Code Rule 56 Subpart 17 and all applicable Blanket Variances. All sampling and analysis shall be performed by a firm independent from the Contractor. The price for the cost for compliance air monitoring sampling and analysis shall be included in the price bid for listed items.

4. Within five (5) calendar days of the receipt of the results of any part of the compliance air sampling and analysis, the Contractor shall forward a copy of those results (showing the name and address of the laboratory, the type of test performed, the method of measurement and all information normally relevant to sampling and analysis of asbestos remediation procedure) to Verizon/ECS on-site representative.

g. Project Folder

Upon completion of the abatement, the Contractor shall provide a complete job folder with the following documents, which shall include chain of custody records:

a. Copy of Supervisor/Handler certifications
b. Copy of the Subcontractor's Enclosure Entry Permit
c. Result of Analysis for All Bulk Samples, Air and Clearance Monitoring
d. Copy of all Notifications (City, State, Federal)
e. Copy of the Vendor's Certificate of Insurance
f. Copy of the Waste Transporter Permit
g. Signed Asbestos Waste

D. Method of Measurement

Payment under this item shall be paid for by the linear foot (L.F.) of each conduit removed. A linear foot of conduit shall be defined as one (1) single conduit up to and including 4" nominal diameter measured along its longitudinal axis that has been broken out and removed.

E. Price to Cover

The unit price per linear foot (L.F.) shall cover the actual costs of all supervision, labor, insurance, (including asbestos liability insurance), materials and equipment necessary to complete the work. The Contractor shall cover the cost of preparing variance application, all filing fees and will submit the application with associated fees to the NYCDEP for processing.

Any contractor's alternative proposals for variance requested from regulatory statutes (NYSDOL & NYCDEP) shall be also included in the actual cost.

Excavation and backfill shall be paid for under JB 401.

F. References

N/A

JB 403T – FURNISH AND INSTALL STEEL PROTECTION PLATES FOR TELECOMMUNICATIONS FACILITIES

A. Description

Under this section, the Contractor shall furnish and install as required permanent steel protection plates over telecommunications facilities where directed by the facility operator(s).

B. Materials

Material shall be:

¼" thick ASTM A-36 plates. Maximum size 24" by 48".

3/8" thick ASTM A-36 plates. Maximum size 12" by 18".

Thickness to be determined by the facility operator(s)

C. Method of Construction

Steel protection plates shall be placed in accordance with the attached facility operator(s) standard sketch JB 403T. All protective plates shall overlap a minimum of 3".

D. Method of Measurement

The quantity for payment shall be the area of permanent steel plating protection furnished and installed (excluding overlap) and measured in place in Square Feet (S.F.).

JB 403T.1 – Furnish and Install 1/4" thick steel plate (S.F.)

JB 403T.2 – Furnish and Install 3/8" thick steel plate (S.F.)

E. Price to Cover

The price shall cover the cost of all labor, material, equipment, insurance, and incidentals necessary to complete the work.

F. References

Sketch JB 403T

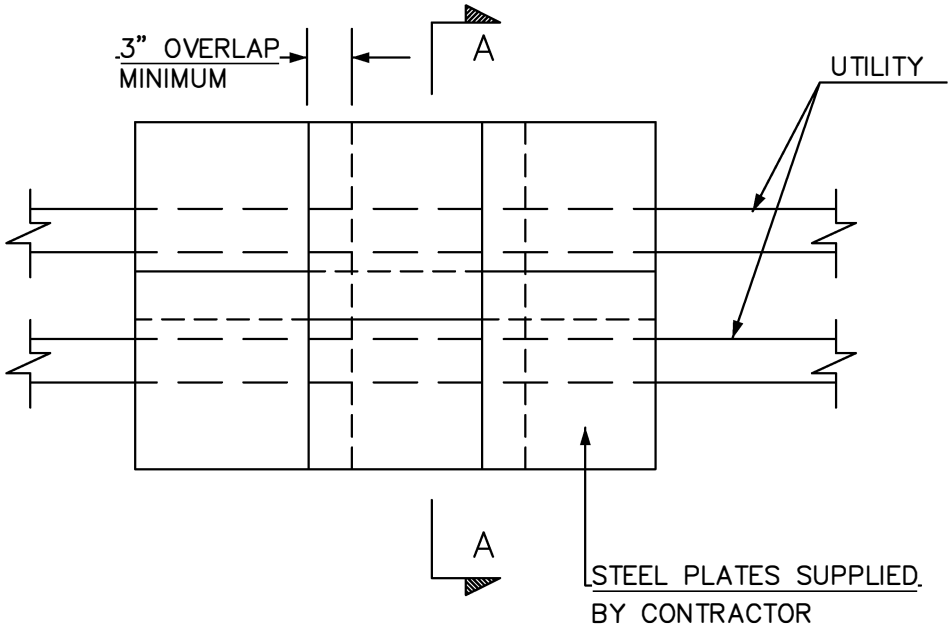

AREA FOR PAYMENT
SHALL BE AS MEASURED
IN PLACE (EXCLUDE OVERLAP)

PLAN

NOT TO SCALE

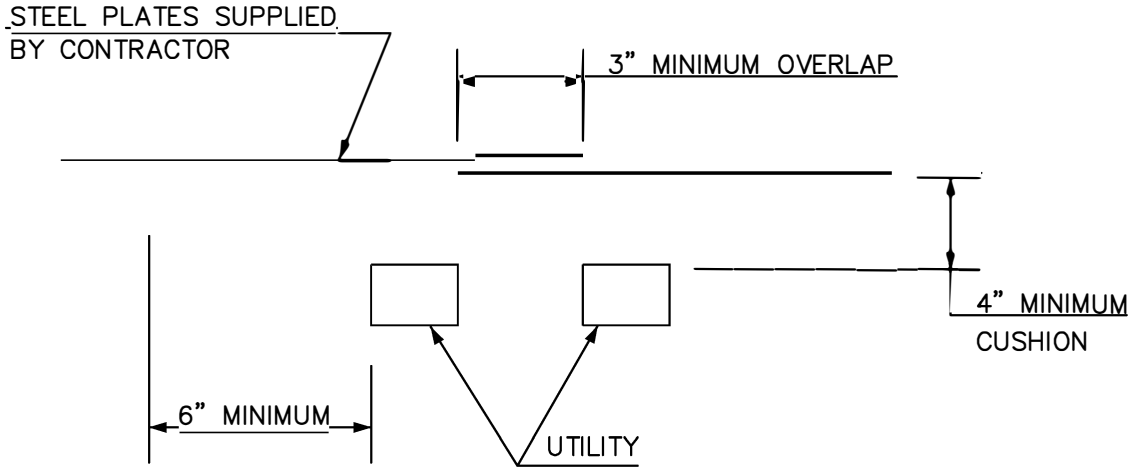

SECTION A–A

NOT TO SCALE

TYPICAL PLATE SIZES:
6" x 48" x 1/4"
12" x 48" x 1/4"
24" x 48" x 1/4"
12" x 24" x 3/8"

REVISIONS
09/13/2017

J.B. SKETCH	
PLACING STEEL PROTECTION PLATES FOR COMMUNICATION FACILITIES	
CONTRACT NO.	SKETCH NO. JB 403 T

JB 404 - PIER AND PLATE METHOD OF PROTECTION FOR DUCTILE IRON WATER MAINS AND OTHER SHALLOW FACILITIES

A. Description

Under this section the Contractor shall provide all labor, materials, equipment, insurance and incidentals required to protect ductile iron water mains that are installed with a cover of 24 inches or less crossing over various utility facilities. This section shall also apply for other facilities with shallow cover where protection plates are not sufficient and pier and plate method is required. The work shall be performed in accordance with the contract plans, specifications and at the direction of the facility operator.

B. Materials

The Contractor shall supply all material (concrete, beams, plates, etc.) necessary to provide the pier and plate method of protection as shown on BWS Standard Drawing No. 46464-Z.

C. Method of Construction

The Contractor shall provide pier and plate protection in accordance with BWS Standard Drawing No. 46464-Z. The Contractor shall support, maintain and accommodate the water main and all other utility facilities during the installation of the pier and plating components. The Contractor shall be solely and totally responsible for disturbances and/or any damages to such facilities.

D. Method of Measurement

The quantity to be measured for payment shall be the additional amount of square foot (S.F.) of steel plate required to be installed to protect ductile iron water mains crossing over utility facilities with a cover of 24 inches or less, or for other shallow facilities where the pier and plate method may be required, as directed by the Facility Operator.

E. Price to Cover

The price shall cover the cost of all supervision, labor, material, equipment, and incidentals necessary to construct the specified method of protection. The work shall also cover the cost to cut, break and remove additional pavement, additional excavation, special care excavation around utilities, sheeting, maintenance of traffic, traffic plates, and to furnish and install additional backfill and pavement restoration.

F. References

1. BWS Standard Drawing No. 46464-Z

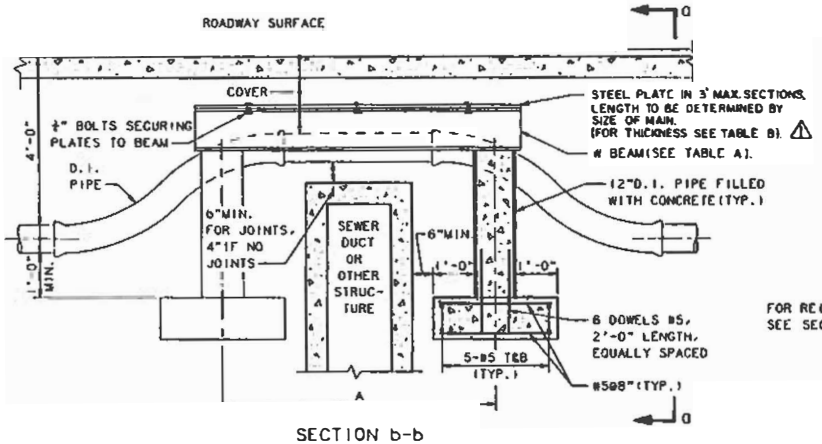

SECTION b-b

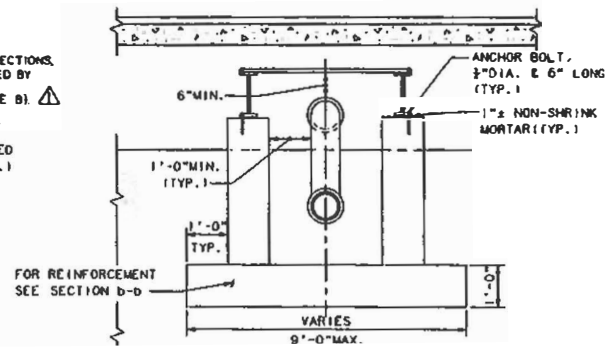

SECTION a-a

TABLE A

A Ft	M_y k-Ft	S_x min. in^3	SUGGESTED BEAM SIZE	
5	29.13	15.8	W12x16 W10x17	W8x18
6	35.7	19.2	W12x19 W10x19	W8x24
7	42.5	22.9	W12x22 W10x22	W8x28
8	54.8	30.44	W12x26 W10x30	W8x35
9	66.73	37.07	W14x30 W12x30	W10x39
10	79.1	43.94	W14x34 W12x35	W10x45
11	91.7	50.94	W14x38 W12x40	W10x49
12	104.7	58.17	W14x43 W12x45	W10x54
13	117.92	65.51	W16x40 W14x48	W12x53
14	131.5	73.08	W16x45 W14x53	W12x58
15	145.3	80.72	W16x50 W14x61	W12x65

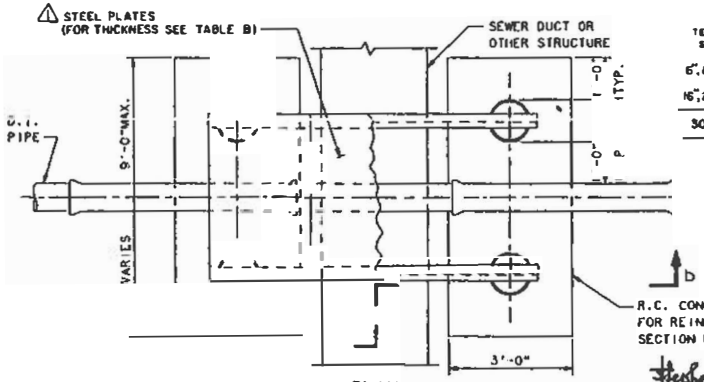

PLAN

TABLE B

TER MAIN SIZE	STEEL PLATE THICKNESS
6", 8", 12"	1" ⚠
16", 20", 24"	1½"
30", 36"	1¾"

NOTES:

1. OFFSETS SHALL HAVE RESTRAINED JOINTS.
2. CLEAN FILL TO BE THOROUGHLY COMPACTED AROUND PIPE BETWEEN BEAMS.
3. ALL PAVEMENT RESTORATION OVER PLATES TO HAVE 6" MIN. CONCRETE BASE. WHEN THE STEEL PLATE IS ADJACENT TO THE BOTTOM OF THE CONCRETE BASE, A BOND BREAKER SUCH AS TAR PAPER SHALL BE INSTALLED BETWEEN THE PLATE AND THE CONCRETE.
4. THE DESIGN FOR PROTECTION OF MAINS MAY BE VARIED AS REQUIRED FOR A PARTICULAR LOCATION, BUT SHALL CONFORM TO THE GENERAL REQUIREMENTS AS SHOWN ON THIS DRAWING. ANY MAJOR DEVIATION FROM THESE REQUIREMENTS SHALL BE APPROVED BY THE ENGINEER.
5. SUPPORT OF PIERS OR BEAMS DIRECTLY ON SEWER, SUBWAY OR OTHER STRUCTURES SHALL BE APPROVED BY THE ENGINEER.
6. IF COVER IS LESS THAN 1'-6", PIPE SHALL BE INSULATED WITH 2" MIN. THICK OF APPROVED INSULATION WITH ALUMINUM JACKET.
7. DIMENSIONS SHOWN FOR CONCRETE SUPPORT ARE APPLICABLE UP TO AND INCLUDING 36" DIAMETER OFFSET.
8. STEEL BEAMS, EXTERIORS OF PIPE COLUMNS, AND OTHER EXPOSED METAL COMPONENTS SHALL BE COATED WITH COAL TAR ENAMEL BEFORE BACKFILLING THE EXCAVATIONS.
   ALL STRUCTURAL STEEL SHALL CONFORM TO ASTM A-36

CITY OF NEW YORK
DEPARTMENT OF ENVIRONMENTAL PROTECTION
BUREAU OF WATER SUPPLY

METHOD FOR PROTECTING D.I. WATER MAINS WITH SHALLOW (LESS THAN 24") COVER

SCALE: NOT TO SCALE — MAY 1986

DRAWN BY: A.S./CAD
CHECKED BY: A.B.

Stephen Grimm P.E.
DIVISION ENGINEER

NO.	DATE	REVISIONS	DIV. ENG.	CH. OF DES	DEP. DIR.
⚠	02-10-87	ADDED TABLE B & NOTE 9			

Walter C. Fitzpatrick P.E.
CHIEF OF DESIGN

Edward A. Abadie P.E.
DEPUTY DIRECTOR

46464-Z

JB 405 - EXCAVATION FOR INSTALLATION OF UTILITY FACILITIES

A. Description

Under this section, the Contractor shall provide all labor, materials, equipment, insurance and incidentals necessary to excavate, maintain trenches and backfill for the installation of new utility facilities including but not limited to:

1. Conduits
2. Non-cost sharing gas facilities
3. Steam mains
4. Steel pipe(s)

The trench to be excavated shall be determined by the size of the utility facility to be installed. The work shall be performed in accordance with applicable specifications, at the direction of the facility operator.

B. Materials

All materials used to excavate and prepare trenches shall be supplied by the Contractor and be approved by the facility operator.

C. Methods of Construction

1. Excavation – The Contractor shall saw cut and/or break and remove existing roadway which may include but is not limited to, asphalt, concrete and cobblestone, utilizing approved equipment that leaves a neat straight joint line along the juncture with subsequently replaced pavement. The Contractor shall be permitted to excavate utilizing a combination of machine and hand excavation, as field conditions warrant and as directed by the facility operator. The trench shall be adjusted so as to provide a nominal cover as defined in the specifications for the facility being installed over the new utility facilities or as required based on field conditions, applicable specifications, or as directed by the facility operator. The width of the trench shall be as directed by the facility operator or as shown on Sketch JB 603T (ECS only). The bottom of the trench shall be graded smooth with a minimum cushion of 3 inches of backfill material or in conformance with applicable specification and be compacted, to minimize initial settlement and to avoid "point" support of new utility facilities. All stones projecting into the trench bottom shall be removed, and the voids backfilled before the new utility facilities are installed. Where streets are not to final grade, the cover shall be measured from the final grade, or the existing grade, whichever provides the deeper trench. Excavation in the vicinity of utilities and other structures shall be performed using hand tools. The contractor shall properly dispose of all materials excavated away from site. Size and location of excavation shall be as directed by the facility operator. Trenches shall be excavated to a depth and size necessary to facilitate the installation of the new utility facility and in conformance with the applicable specification. All existing facilities that are encountered during trench excavating shall be protected in a manner suitable to the facility operator. Tight sheeting shall be used, as required, based on field conditions and/or when the depth of excavation is equal to or greater than five feet. Skeleton type sheeting will not be permitted. The sheeting required shall be furnished and installed in full compliance with the State of New York and Federal Safety Code requirements and in compliance with applicable specifications and/or as directed by the facility operator.

Care shall be taken that no existing utility facilities or other structures are broken or damaged. Contractor shall excavate all material encountered necessary to facilitate the installation of the new utility facilities, and as directed by the facility operator. Care should be taken to avoid damage to existing utility facilities and structures, and to pavements and their foundations, and to avoid caving or sliding banks within the excavation.

2. Maintenance of Trench Excavation - Excavated trenches shall be maintained free of debris and kept dry by the contractor. In order to accomplish this, contractor shall, upon completion of excavation and placement of sheeting (as required and/or if depth is equal to or greater than five feet), furnish and install adequate steel plates, as directed by the facility operator, and posting over the excavated trenches and shall temporarily remove all equipment debris and workers, and relocate barricades in order to open the full width of street to traffic during non-working hours, as required based on DOT requirements. The Contractor shall then, at no additional cost, relocate such barricades barrels, cones and other warning devices and remove steel plates, as and when directed by the facility operator to facilitate the installation of the new utility facility. When work is being performed and the excavations are not covered with steel plates, the Contractor shall provide complete and safe access to the trench as may be required, and shall provide construction barricades and maintain traffic at all times as shown or as directed by the facility operator. Upon completion of installation of the new utility facility, the trench excavation shall be backfilled by the contractor in accordance with Contract requirements and all backfill material shall conform to contract specifications for such purpose.

3. Pavement and Sidewalk Restoration - After backfilling is completed, the contractor shall install temporary pavement consisting of six inches (6”) thick asphaltic concrete mixture in roadway areas or a two inches (2”) thick asphaltic concrete mixture in sidewalk areas in order to maintain existing pedestrian and vehicular traffic. This temporary pavement shall be maintained until permanent replacement as specified in contract.

D. Method of Measurement

The quantity to be measured for payment shall be the number of cubic yards (C.Y.) of trench actually excavated and backfilled as directed by the facility operator or as shown on Sketch JB 603T for JB 603T Items. The volume occupied by existing pipes or other structures will not be deducted from the total volume measured.

JB 405.1 - Trench Excavations for installation of Utility Facilities with total depths less than five feet (C.Y.)

JB 405.2 - Trench Excavations for Utility Facilities with total depths equal to or greater than five feet (C.Y.)

E. Price to Cover

The unit price bid for the various trench excavation items shall include the cost of all labor, materials, equipment, insurance, and incidentals necessary to completely expose, protect and maintain the integrity of the facilities without disruption of service to the customers and in accordance with the contract documents. The price shall also include, installation of traffic plates as well as opening and closing of plates as may be required in order to provide access to trench; installation, removal and maintenance of tight sheeting as required; cutting, breaking and removing various thickness of surface and base pavement; excavation by hand to expose

existing structures; furnishing, placing and compacting clean backfill following installation of utility facility in compliance with DOT requirements. Any required removing, trucking, storing, and disposing of material shall be deemed included in the unit price. The price shall also include the cost of providing temporary pavement restoration. Permanent pavement restoration shall be paid under city items. The price shall also include the cost of locating and protecting all utilities encountered as required.

Clean backfill material in accordance with specifications shall be used around gas facilities and critical facilities shall be paid for under item JB 303.

F. <u>References</u>

1. Item JB 303
2. Sketch JB603T
3. Con Edison Specifications, latest revisions

CEHSP S13.00 – Excavation and Trenching

JB 407 - PLACING OF ELECTRONIC MARKERS ON GAS MAINS & SERVICES

A. Description

Under this section, the Contractor shall place electronic markers supplied by the facility operator(s) over gas mains and services where directed by the facility operator(s) and in consultation with the Resident Engineer.

B. Materials

Materials shall be supplied and delivered by the facility operator(s) at the job site or construction yard as requested by the Contractor.

C. Method of Construction

Electronic Markers shall be placed in accordance with the attached facility operator(s) drawing 502664. The Electronic Markers will be attached using 30" cable ties provided by the facility operator.

D. Method of Measurement

The quantity for payment shall be the number of Electronic Markers installed and measured in each (EA).

JB407.1 - shall be for the installation of Electronic Markers (class and stock # 456-0481; Gas Marker Ball) less than or equal to 5' in depth measured from the proposed finished grade.

JB 407.2 - shall be for the installation of Electronic Markers class and stock # 456-0482; Gas Full Range Marker) greater than 5' of depth measured from the proposed finished grade.

E. Price to Cover

The price shall cover the cost of all labor, material, equipment, insurance, and incidentals necessary to unload, store, handle, install, and perform any other associated work required to installs the Electronic Markers completely in place.

F. References

1. Dwg No. 502664

502664

REVISIONS

M. BALDOVIN 1/6/14 **0**

D.J. 01/3/14

M.BALDOVIN 10/6/14 **1**

NOTE D: ADDED 5' MIN. DISTANCE BETWEEN EM'S.

H.T. 10/6/14

M.BALDOVIN 10/4/19 **2**

REVISED NOTE: A, B, D AND E.

D.O. 10/4/19

M.BALDOVIN 12/13/19 **3**

REVISED NOTE: E

D.O. 12/13/19

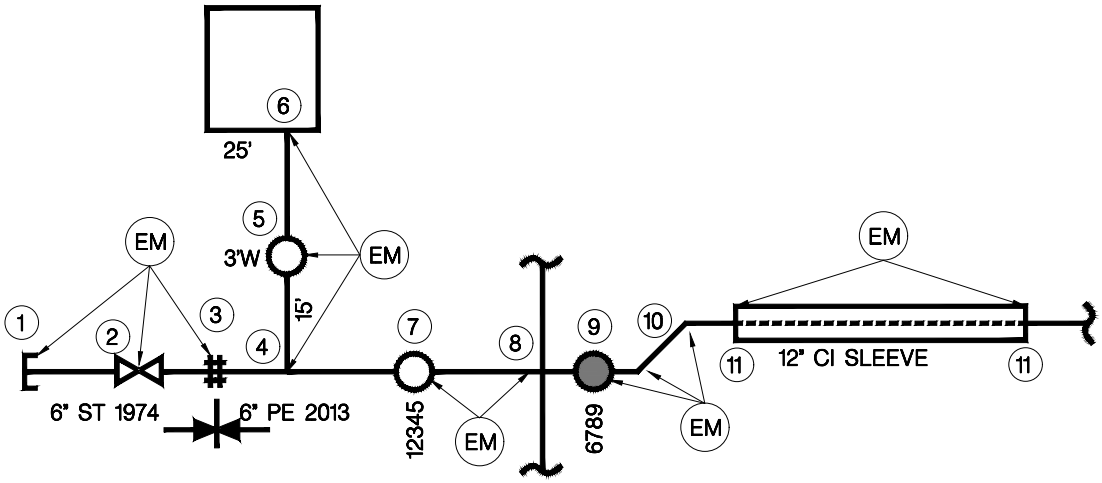

NOTES

A. NATURAL GAS ELECTRONIC MARKERS (EM) ARE RADIO FREQUENCY IDENTIFICATION (RFID) TAGS WITH THE INDUSTRY STANDARD 83 kHZ SIGNAL FOR LOCATING BURIED GAS FACILITIES. ELECTRONIC MARKERS (EM) SHALL BE INSTALLED IN ADDITION TO GAS WARNING TAPE AND TRACER WIRE FOR PE PLASTIC PIPE.

B. FOR GAS FACILITIES INSTALLED LESS THAN (<) 5 FEET DEEP, EM BALLS SHALL BE ATTACHED TO THE TOP OF STEEL (ST), WROUGHT IRON (WI), CAST IRON (CI), AND POLYETHYLENE (PE) PLASTIC BURIED GAS PIPE AND FITTINGS WITH NYLON/PLASTIC CABLE TIES. ENSURE EM BALL INSTALLATION DOES NOT INTERFERE WITH OPERATION OF VALVES.

C. FOR GAS FACILITIES INSTALLED GREATER THAN OR EQUAL (≥) 5 FEET AND LESS THAN (<) 8 FEET DEEP, EM FULL-RANGE MARKERS SHALL BE INSTALLED ADJACENT TO ST, WI, CI, AND PE PLASTIC GAS PIPE AND FITTINGS. ENSURE EM FULL-RANGE MARKER INSTALLATION DOES NOT INTERFERE WITH OPERATION OF VALVES.

D. EM BALLS AND FULL-RANGE MARKERS SHALL BE INSTALLED AT THE FOLLOWING GAS DISTRIBUTION MAIN AND SERVICE LOCATIONS (REFER TO SKETCH ABOVE) AND SHALL NOT BE INSTALLED CLOSER THAN 5' TO ANOTHER EM FOR CLEAR IDENTIFICATION BY EM LOCATOR EQUIPMENT:

1. **MAIN OR SERVICE STUB ENDS**
2. **MAIN OR SERVICE REPAIR LOCATIONS**
3. **MAIN OR SERVICE CHANGE IN MATERIAL**
4. **MAIN-TO-SERVICE CONNECTIONS**
5. **SERVICE CURB VALVES**
6. **SERVICE POINT OF ENTRY AT OUTSIDE FOUNDATION WALL (DIRECT BURIED SERVICES)**
7. **MAIN VALVES**
8. **MAIN TIES OR CROSSES**
9. **DRIP POT STANDPIPES**
10. **MAIN OR SERVICE VERTICAL AND HORIZONTAL OFFSETS (GREATER THAN 2 FEET)**
11. **MAIN OR SERVICE CASING ENDS (INSTALL ON CARRIER PIPE NOT INSERTED PIPE)**
12. **MAIN OR SERVICE INSTALLATIONS: EVERY 25 LINEAR FEET**
13. **TEST PITS (EXPOSED LIVE GAS PIPE ONLY)**

E. EM BALL AND EM FULL-RANGE MARKER INSTALLATION LOCATIONS SHALL BE NOTED ON AS-CONSTRUCTED DRAWINGS, EMERGENCY SKETCHES, AND CORRECTION-TO-DETAIL DRAWINGS. THEIR PRESENCE SHALL BE NOTED ON THE GAS MAPS.

MATERIAL	
EM	**CLASS & STOCK#**
GAS MARKER BALL (PASSIVE)	**456-0481**
GAS FULL-RANGE MARKER (PASSIVE)	**456-0482**
30" CABLE TIES	**007-6273**

JB-61

GAS OPERATIONS CONSTRUCTION STDS. VOLUME 2 SECTION 4

INSTALLATION OF ELECTRONIC MARKERS ON GAS MAINS & SERVICES

CONSOLIDATED EDISON COMPANY OF N.Y., INC.
GAS OPERATIONS DEPT.

DATE 1/6/14
LAST REV. 12/13/19

DWG. NO. 502664 REV. 3

JB 450 – CONSTRUCTION FIELD SUPPORT

A. Description

Under this section, the Contractor shall provide all labor, materials, equipment, insurance and incidentals necessary to provide construction field support, while maintaining and protecting surface and subsurface facilities, at various locations approved solely by the facility operator. The Contractor shall encounter various surface and subsurface utility facilities while performing various construction field support operations, which may include but are not limited to working over, under, adjacent to, around, in between and in close proximity of:

1. Conduits
2. Conductors
3. Concrete encased conduit banks
4. Steel pipes
5. Gas mains
6. Steam mains
7. Oil-o-static facilities
8. Utility structures and covers

The actual construction field support operation to be performed by the Contractor shall be performed in accordance with the contract plans, specifications or as determined based on actual field conditions and at the sole discretion and direction of the facility operator. This item shall apply to various field support operation tasks for which there are no other applicable JB Items to cover the required work. This item will not apply and will not be paid when there are other applicable JB items available either partly or completely covering tasks described below as determined solely by the facility operator.

The Contractor is expressly notified that the work under this Section affects the timing of other work to be performed on this Contract. The Contractor is advised to carefully investigate the relationship between this work and other work and adjust his schedule accordingly. The Contractor shall also coordinate his efforts with that of the facility operator with respect to all work impacting the facilities in question.

B. Materials

All materials used to provide construction field support shall be supplied by the Contractor and be approved by the facility operator in consultation with the Resident Engineer.

C. Methods of Construction

It is the intent of this item that the Contractor provides field support construction crews suffice to perform various item type tasks required as described. For the purpose of this item a crew consists of more than one non-management individual. The Contractor shall provide all labor and equipment necessary to perform the required task as described below under existing field conditions at various locations and at the sole discretion and direction of the facility operator in consultation with the Resident Engineer. The Contractor shall perform the necessary construction field support, while maintaining and protecting surface and subsurface facilities. The Contractor shall employ approved methods of operation, including the use of appropriate equipment and tools that will enable him to complete the field support operation work as described in the Item

Type description below. Existing facilities that are encountered during the construction field support operation shall be supported and protected similar to those indicated on sketches JB 100A and 100B and in a manner suitable to the facility operator in consultation with the Resident Engineer and are deemed included in this item except as included under JB-402T. The Contractor shall properly dispose of all materials excavated away from site, which may require the use of hand-held tools and equipment in order to ensure that the integrity of the underground utility facilities is not jeopardized. Care should be taken to avoid damage to existing utility facilities and structures, and to adjacent curbs, sidewalks, pavements and their foundations, and to avoid caving or sliding banks within excavations.

D. <u>Method of Measurement</u>

1 – Quantity - The quantity to be measured for payment shall be the number of actual crew hours (CRHRS.) provided by the Contractor for performing the various types of construction field support operation as directed by the facility operator in consultation with the Resident Engineer.

2 – Type – The unit type to be measured for payment shall be based on the actual task performed by the contractor and covered by the applicable Item Type. The tasks described within the Bid Item Type below are provided as a guide only as to the general nature of the various functions included, but these examples in no way limit the use of the item to these functions only. The contractor should use this information in order to approximate the various required crew sizes necessary to perform the work covered by this item in a productive, safe and efficient manner. The actual construction crew size required to perform the field support operation shall be determined solely by the contractor in order to perform the required construction field support operation. It is the responsibility of the contractor to provide appropriate field support crews capable of performing required tasks in a productive, safe and efficient manner. The actual crew performing the operation will not be considered, by the facility operator in consultation with the Resident Engineer, when determining the applicable item type, which shall be only as per the task performed.

Note: Only one measurement type will be used for each defined construction field support area.

Type .1 = Construction Field Support requiring an average size survey crew that will perform typical field survey functions and provide quality data analysis reports.

Type .2 = Construction Field Support requiring an average small size crew capable of performing various tasks not requiring the use of a machine or operator, which may include but are not limited to: opening/closing subsurface structure cover(s), setting/resetting MPT setup(s), assisting Utility Facility/Specialty crew(s) not included in JB 402T or JB 450.5, performing conduit occupancy identification, clean-up storage work-site area, etc.

Type .3 = Construction Field Support requiring an average medium size crew capable of performing various tasks which include the use of a machine and operator, which may include but are not limited to: excavations due to cable failures, including emergency type excavations, construct manhole enclosures, installing support system for utility facilities, dewatering utility structures and excavations, opening/closing traffic and/or pedestrian plates, etc. not included in JB 402T or JB 450.5.

Type .4 = Construction Field Support requiring an average large size crew capable of performing various tasks that requires the use of multiple machine(s) and operator(s), which may include but are not limited to: assistance during heat contingency, welding, repositioning and placing large diameter pipe, etc.

Type .5 = Construction Field Support requiring an average small size crew when requested by the facility operator on an on-demand hourly basis for a maximum of 2 hours per day or as approved by the facility operator to assist the facility operator or specialty contractor hired by the facility operator in shifting and supporting the conduits during pipe-ripping operations and all else necessary as required to complete the work including but not limited to constructing temporary work platform and temporary weather protection.

E. Price to Cover

The unit price bid for the various construction field support items shall include the cost of all labor, materials, equipment, insurance, and incidentals necessary to provide construction field support, which may include but is not limited to working over, under, adjacent to, around, in between and in close proximity of surface and subsurface utility facilities and exposing, supporting, protecting and maintaining the integrity of the facilities without disruption of service to the general public, utility customers and in accordance with the Contract Documents at various locations approved by the Facility Operator in consultation with the Resident Engineer. The unit price shall also include openings and closings of plates, and cones, barrels, arrow-boards, etc. and installing, shifting, moving and relocating cones, barrels, arrow-boards, etc. as may be required in order to provide access to excavations and during specialty work being performed by others excluding work operations covered under JB402T. The unit price shall also include excavating by hand to expose existing structures. Any required removing, trucking, storing, and disposing of material shall be deemed included in the unit price bid. The unit price shall also include the cost of supporting and protecting all utilities encountered during the construction field support operation, as required except work operations covered under JB 402T. The unit price bid shall also include alternate methods for construction field support, which may include changes in equipment and special operations, and sequencing and the use of only all hand-held tools due to existing field conditions, including potential delays and extended performance. Any and all Contractor method changes and operation modifications employed for construction field support are deemed to be included in the price bid for this item. Work under this item may be paid in combination with other City, utility or facility accommodation Items bid under other contract items except where expressedly excluded from that item.

F. References

1. Sketches JB 100A, JB 100B

JB 500 - REMOVAL OF ABANDONED UTILITY CONDUITS (NON-CONCRETE ENCASED)

A. Description

Under this section, the Contractor shall provide all labor, materials, equipment, insurance and incidentals required to remove all abandoned conduit(s), including but not limited to:

1. Conduit(s) (non-concrete encased).

The work shall include the breaking, removal and disposal of conduits (all types excluding steel pipes) and including backfilling with clean earth.

B. Materials

All materials including but not limited to clean backfill shall be supplied by Contractor and approved by the facility operator(s) in consultation with the Resident Engineer.

C. Methods of Construction

The facility operator(s) shall identify the locations of utilities that are abandoned within the contract area that are to be removed under this item. The authorized field representative of the facility operator shall certify in a timely manner acceptable as to which facilities are abandoned. The Contractor shall remove and properly dispose of all conduit(s) material encountered and seal the existing abandoned conduit(s) openings.

D. Method of Measurement

The quantity to be measured for payment shall be the linear footage (L.F.) of total number of conduit(s) removed.

E. Price to Cover

The unit price bid shall cover the cost of all labor, material, equipment, insurance and incidentals necessary to remove the abandoned conduit(s). The price shall also include the cost of removal and disposal of conduit(s); supplying clean earth material, backfilling with clean earth approved by the facility operator(s) in consultation with the Resident Engineer; sealing the existing abandoned conduit(s) openings; and all other items necessary to perform all work incidentals thereto.

F. References

None

JB 603T - FURNISH AND INSTALL TELECOMMUNICATIONS CONDUITS

A. Description

Under this Section, the Contractor shall provide all labor, materials, equipment, insurance, and incidentals required to procure and install conduit for the purpose of installing the facility operator's utilities. Conduit runs shall be as shown on the contract drawings or as specified by the facility operator in consultation with the Resident Engineer.

B. Materials

Conduit shall consist of:
PVC – 2” and 4” diameter or 1 ¼” Quad, Type “C” as supplied by American Pipe and Plastics or approved equal
Steel - 4” diameter, ASTM A53, Schedule 40 or approved equal
All conduit including sleeves, couplings, bends, pulling lines, etc. shall be supplied by the Contractor and approved by the facility operator in consultation with the resident Engineer.
The Contractor shall supply all material (Mortar, Brick, etc.) to make repairs to opening(s) as approved by the facility operator in consultation with the Resident Engineer.

C. Method of Construction

The Contractor shall install the specified conduit(s) then rod, mandrel and wire (install pulling line) the new conduits. When conduit pipes are to be connected to existing underground ducts, manholes, or boxes, the Contractor, using hand-held tools only, shall cut existing conduit, to pick-up existing underground conduits with new conduits, make openings into manholes or boxes, install/connect the conduit, and make repairs to seal the openings in the structure.

Steel pipe shall be used for shallow cover and crossing or paralleling steam mains as directed by the facility operator in consultation with the Resident Engineer.

When the facility operator required a combination of conduit types and materials the facility operator will define the configuration of the conduit system and the location of each type within the conduit bank. All conduit shall be spaced 1 ½” both vertically and horizontally from the adjacent conduit(s). All conduits shall be encased in lean concrete (f’c = 1200 to 1500 psi maximum) which shall extend 2” beyond each face of the conduit formation, above and each side of the conduit formation.

If due to subsurface conditions, the cover is less than 20" from finished grade, the duct shall be protected with steel plates furnished by the facility operator(s) and measured for payment under Item JB 403.

The work shall be performed in accordance with the contract plans, specifications, and at the directions of the facility operator in consultation with the Resident Engineer.

D. Methods of Measurement

The quantity to be measured for payment shall be the number of linear feet (LF) of conduit trench for which conduit was furnished and installed:

1. 603T.1 - Install 1 ea. 2", 4" or 1 ¼" Quad" Conduit (PVC or Steel) in any combination
2. 603T.2 - Install 2 ea. 2", 4" or 1 ¼" Quad Conduits (PVC or Steel) in any combination
3. 603T.3 - Install 4 ea. 4" or 1 ¼" Quad Conduits (PVC or Steel) in any combination
4. 603T.4 - Install 6 ea. 4" or 1 ¼" Quad Conduits (PVC or Steel) in any combination
5. 603T.5 - Install 8 ea. 4" or 1 ¼" Quad Conduits (PVC or Steel) in any combination
6. 603T.6 - Install 12 ea. 4" or 1 ¼" Quad Conduits (PVC or Steel) in any combination
7. 603T.7 - Install 15 ea. 4" or 1 ¼" Quad Conduits (PVC or Steel) in any combination
8. 603T.8 - Install 24 ea. 4" or 1 ¼" Quad Conduits (PVC or Steel) in any combination
9. 603T.9 - Install 30 ea. 4" or 1 ¼" Quad Conduits (PVC or Steel) in any combination

A Quad, consisting of four 1 ¼" conduits shall be supplied as one unit. For purposes of measurement and payment each quad unit of four 1 ¼" ducts shall be counted as one duct.

For any equivalent combination not fitting the above categories payment shall be based on the next higher category.

E. Price to Cover

The unit price per linear foot of Conduit trench shall cover the cost of all labor, materials, equipment, insurance and incidentals necessary to furnish, install, rod, rope, and perform any other associated work required to install the conduit completely in place. Where conduits are to be connected to ducts, manholes or boxes, the cost of cutting and/or breaking into the ducts, manholes or boxes, installing and sealing the conduit, including duct plugs; and making repairs to the openings in the structure shall be considered as included in the unit price bid for the installation of the conduit. All acceptance testing, including passing a mandrill with a diameter of 1/8" less than the inside diameter of the duct through the entire length of the duct, as required by the facility operator shall be considered as included in the unit price.

Payment for trench excavation shall be paid under Item JB 405.

Steel protection plates shall be paid for under Item JB 403T

F. References

1. Sketch JB 603T
2. Item JB 405
3. American Pipe and Plastics, P.O. Box 577, Binghamton, N.Y. 13902

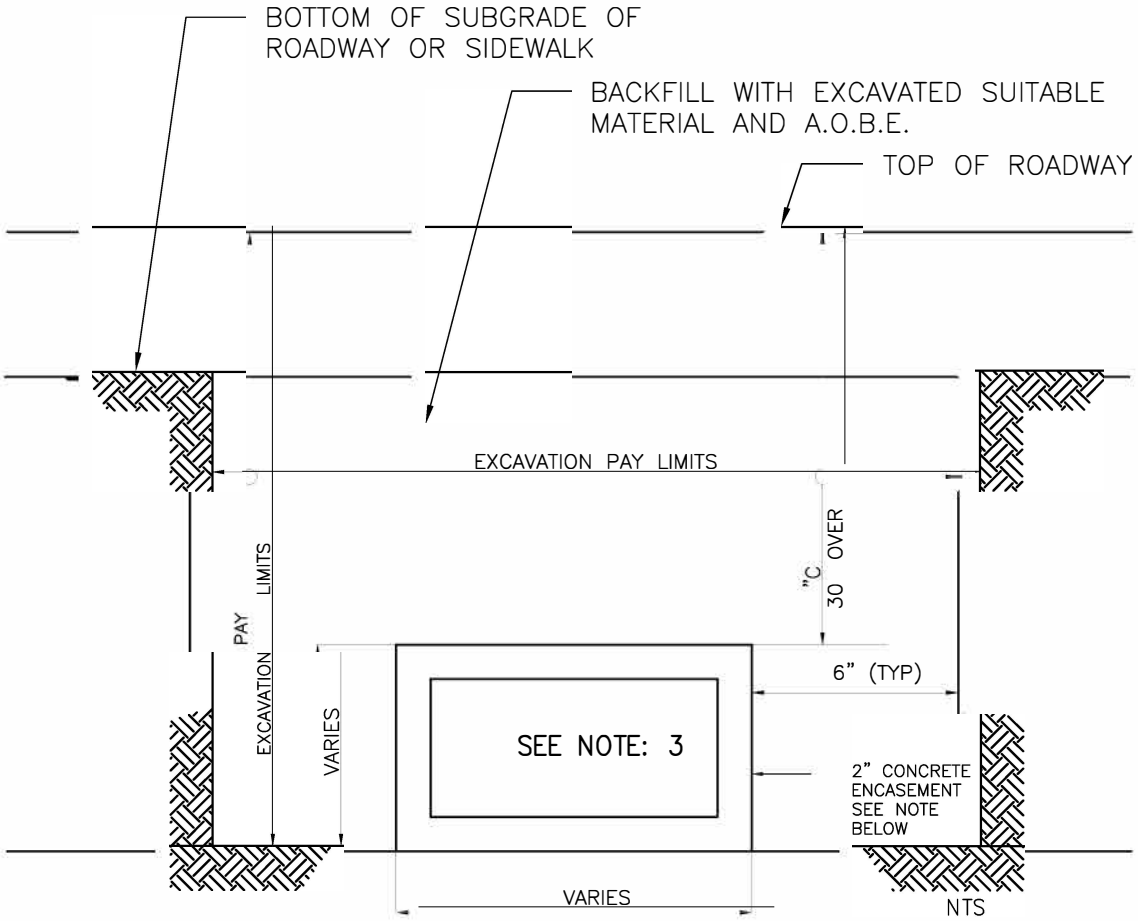

TYPICAL CONDUIT EXCAVATION AND BACKFILL

NOTES:

QUEENS, BROOKLYN & STATEN ISLAND

1– CONCRETE ENCASE REQUIRED IF TOP OF DUCTS IS 20" OR LESS FROM SURFACE AND ALL BENDS, SWEEPS AND CHANGE OF GRADE. FOR COVER LESS THAN 20", 3/8" STEEL (A36M) COVER PLATES IN ADDITION TO THE CONCRETE ENCASEMENT SHALL BE PROVIDED.

MANHATTAN & BRONX,

2– FOR COVER LESS THAN 20", 1/4" STEEL (A36M) COVER COVER PLATES IN ADDITION TO THE CONCRETE ENCASEMENT SHALL BE PROVIDED.

3– CONDUIT CONFIGURATION TO BE DETERMINED BY ECS/VERIZON REPRESENTATIVE.

J.B. SKETCH		
TRENCH EXCAVATION FOR CONDUIT		
09/13/2017	CONTRACT NO.	SKETCH NO. JB 603T

JB 636E - ADJUSTMENT OF UTILITY HARDWARE

Under this section the Contractor shall adjust existing utility street hardware including vault grates, valve boxes, etc., to the proposed grade by either building up or lowering the installation and resetting the castings, as and where directed by the facility operator.

A. Description

Building up or lowering the installation and resetting the castings shall consist of removing the existing frame and cover, building up or decreasing the existing installation, replacing the frame and/or cover if damaged, as determined by the facility operator, with a new frame and/or cover furnished by the facility operator, and setting the frame and cover to the new elevation.

B. Materials

Materials used shall comply with the Standards and specifications of the facility operator having jurisdiction over the installations. Where high-early strength concrete is required by the Resident Engineer to be placed adjacent to utility installations then the requirement for mortar shall be quick setting mortar capable of obtaining a minimum compressive strength of 1,500 psi in two (2) hours, and the requirement for concrete shall be high-early strength complying with current N.Y. State Department of Transportation, Standard Specifications for Class F concrete.

When castings and/or covers are deemed inadequate at a location as determined by the facility operator, the facility operators shall furnish new castings and/or covers to the Contractor for installation. The Contractor is required to inform the utility operator in advance of the need for the castings. Materials supplied by the facility operator shall be delivered to the contractor's designated storage area.

C. Methods of Construction

The Contractor shall breakout and dispose of sidewalk, curb, pavement and/or pavement base around existing casting, excavate as required to remove casting and install existing or replacement casting, remove casting, protect opening, reinstall existing casting or install new casting to the proposed grades, backfill, grade and compact fill around casting, install base concrete and or sidewalk pavement and curb, tack coat around frame, install and remove temporary pavement around casting where directed by the facility operator; and install and compact asphalt binder and wearing course or other permanent pavement around casting and perform all work in accordance with the contract plans and the specifications.

Setting or resetting the castings shall be done with bricks plus mortar and/or by raising or lowering adjustable castings according to the standards of the utility owner having jurisdiction over the installation. Work shall be done in a workmanlike manner. Any damage resulting from the Contractor's operations to the existing installation which is to remain shall be satisfactorily corrected at the Contractor's own expense, as directed by the facility operator. Castings, which are deemed unacceptable for resetting, shall become the property of the Contractor and shall be removed and disposed of by him away from the site.

No traffic shall be allowed on adjusted utility hardware until permitted by the facility operator.

D. Method of Measurement

The quantity to be measured for payment shall be the number of utility hardware units (EA) in each size group actually adjusted as specified under each item. The size of each utility hardware unit, measured in width, shall be defined as either, the diameter of the exposed edge of the casting, or the exposed edge of the longest side of rectangular frames as indicated in sketch JB 636.

JB 636 EA - Adjustment of Utility Hardware (Under 7" Width)

JB 636 EB - Adjustment of Utility Hardware (7" to under 14" Width)

JB 636 EC - Adjustment of Utility Hardware (14" to under 30" Width)

JB 636 ED - Adjustment of Utility Hardware (30" to under 34" Width)

JB 636 EE – Adjustment of Utility Hardware (34” to under 41” Width)

JB 636 EG - Adjustment of Utility Hardware (41" to under 75" Width)

JB 636 EH - Adjustment of Utility Hardware (75" to under 125" Width)

JB 636 EI - Adjustment of Utility Hardware (125" to under 170" Width)

E. Price to Cover

The price for re-grading utility hardware shall be the unit price per each (EA.) and shall cover the cost of furnishing all labor, materials, plant, equipment, and incidentals required to remove existing frames and covers; build up the existing installations with brick and mortar, or lower the existing installations by removing bricks and mortar; replace damaged frames and/or covers with frames and/or covers furnished by others; break out pavement and/or pavement base; protect existing opening and installation; set the frames and covers to new elevations; grade and compact fill; install base concrete; tack coat frame; install, remove, and dispose temporary pavement; install and compact asphalt binder and wearing course or other permanent pavement; repair minor structural damage to existing installations prior to resetting frames; unloading of furnished castings at the Contractor's yard and transporting castings from the Contractor's yard to the job site as required; and complete the work in accordance with the plans, the specifications, and the directions of the facility operator.

F. References

1. NYS DOT Standard Specs for Class F Concrete
2. Con Edison Specifications, latest revisions. EO-10321-B, latest revision – Chimneys, collars & grading blocks for manholes & vaults construction and installation
3. Sketch JB 636E

ROUND COVERS

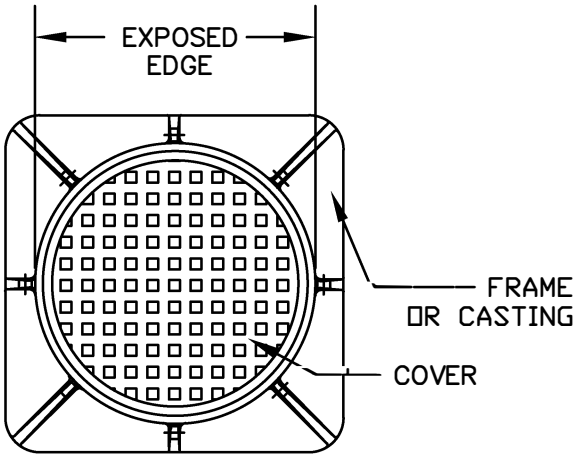

RECTANGULAR COVERS/FRAMES

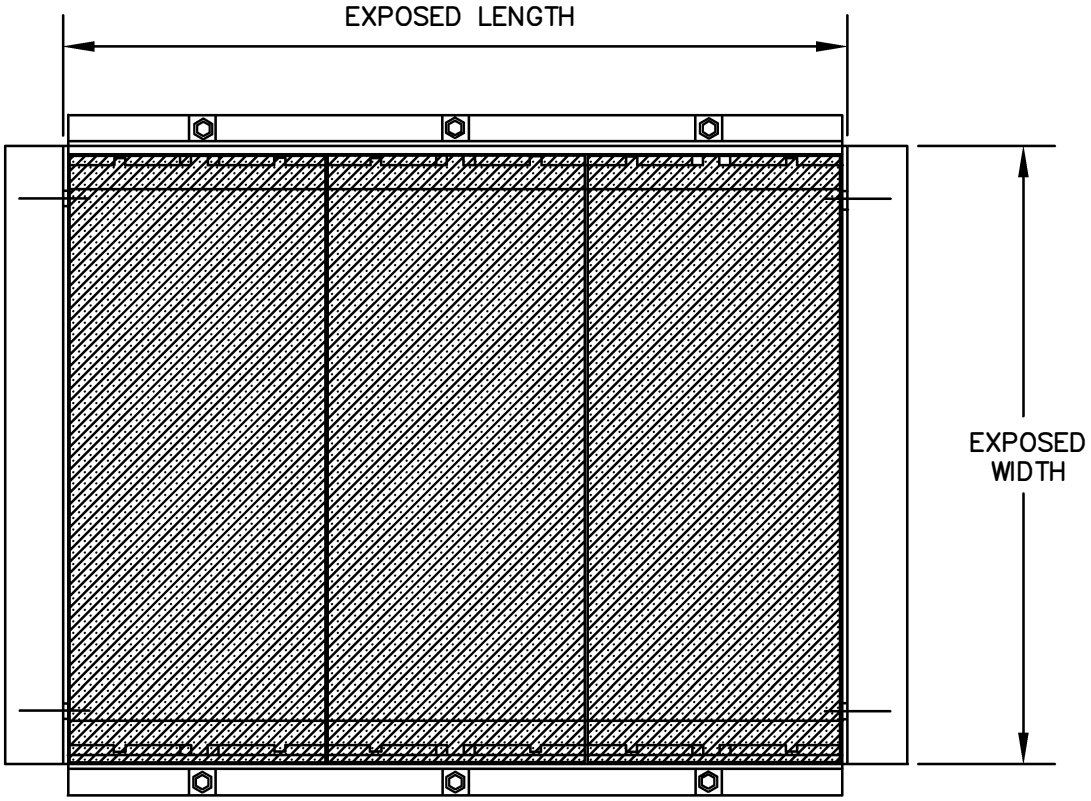

PLAN VIEW

N.T.S.

ADJUSTMENT OF UTILITY HARDWARE	
LAST REVISION 6/30/2015	SKETCH NO. JB 636E

JB 636 M - MODIFICATION OF WORK METHODS TO ACCOMMODATE UTILITY HARDWARE DURING PAVEMENT MILLING AND RESURFACING OPERATIONS

A. Description

Under this section, the Contractor shall provide all labor, materials, equipment, insurance, and incidentals required to maintain, protect, and accommodate the integrity of utility hardware during pavement milling and resurfacing operations. Hardware includes castings, frames, and covers on utility structures, valve box cover castings, concrete collars around steam castings, and all other hardware protecting utility facilities.

B. Materials – N/A

C. Method of Construction

Removal of existing pavement around utility hardware shall be performed by the Contractor with extreme caution by utilizing appropriate methods of operation, by employing specialized construction equipment, and by special operations and sequencing.

The Contractor shall not mill existing pavement within 12” of the perimeter of utility hardware. Removal of pavement within 12” of the perimeter of utility hardware shall be by cutting with pavement breakers or other methods as proposed by the Contractor. All methods shall be presented to the facility operator and the Resident Engineer by the Contractor prior to the start of construction and shall be approved by the facility operator in consultation with the Resident Engineer.

During removal of existing pavement and for the duration of project, the Contractor shall protect utility hardware from damage by the Contractor’s operations and traffic. Contractor shall also provide all necessary protection to pedestrians to prevent injury to pedestrians when crossing utility hardware during the project. Utility street hardware damaged by the Contractor or others during the project shall be replaced by the Contractor at Contractor’s expense.

The Contractor shall not place any paving materials over utility hardware during the project.

D. Method of Measurement

The quantity to be measured for payment shall be the number of utility hardware units (ea) in each size group actually adjusted as specified under each item. The size of each hardware unit, measured in width, shall be defined as the diameter of circular covers, the major axis of elliptical covers, or the larger length or width of rectangular covers.

1. Item 636 MA – Modification of Work Methods to Accommodate Utility Hardware (Under 7" Width)
2. Item 636 MB – Modification of Work Methods to Accommodate Utility Hardware (7" to under 14" Width)

3. Item 636 MC – Modification of Work Methods to Accommodate Utility Hardware (14" to under 30" Width)
4. Item 636 MD – Modification of Work Methods to Accommodate Utility Hardware (30" to under 34" Width)
5. Item 636 ME – Modification of Work Methods to Accommodate Utility Hardware (34” to under 41” Width)
6. Item 636 MG – Modification of Work Methods to Accommodate Utility Hardware (41" to under 75" Width)
7. Item 636 MH – Modification of Work Methods to Accommodate Utility Hardware (75" to under 125" Width)
8. Item 636 MI – Modification of Work Methods to Accommodate Utility Hardware (125" to under 170" Width)
9. Item 636 SMB – Modification of Work Methods to Accommodate Utility Steam Hardware (Under and including 8" Width)
10. Item 636 SMC – Modification of Work Methods to Accommodate Utility Steam Hardware (Above 8" to 34" Width)

A. <u>Price to Cover</u>

The price to modify work methods to accommodate Utility Hardware during pavement milling and resurfacing operations shall include the cost of all incremental labor, materials, time, equipment, insurance and incidentals required for removal and disposal of existing pavement, installation and compaction of base and wearing course materials, installation and compaction and removal of temporary asphalt concrete mixture, tack coating; in accordance with the plans, the specifications and the directions of the facility operator in consultation with the Resident Engineer. The price to cover shall further include the cost of maintaining, protecting, and accommodating the integrity of utility street hardware during the project and during the performance of milling and resurfacing and the incremental additional work and effort made necessary to protect pedestrians from injury when crossing utility hardware during the project. The price to cover shall further include additional areas of modification of work methods beyond 12” of the perimeter of the utility street hardware due to the milling equipment and the location of other utility hardware, city street hardware, utility poles, street lights, traffic signals, curbs, sidewalks, medians, guide rails, pavement stops, cobblestones, and pavers. The price to cover for Items 636 SMB and 636 SMC shall also include modification of work methods due to existing concrete collars surrounding these castings.

Payment for all work herein specified shall be made on a one-time basis only; no payment for work herein specified shall be made for the same area more than one time. Adjustment to utility hardware shall be paid for under the appropriate JB 636E item.

F. <u>References</u>

1. JB 636E

JB 638NT – FIELD CONSTRUCTED TELECOMMUNICATIONS MANHOLE STRUCTURES

Under this item the Contractor shall perform the complete installation of field constructed utility structures approved by the facility operator in consultation with the Resident Engineer. The utility structure shall be field constructed and installed in compliance with standard utility specifications and/or methods approved by the facility operator in consultation with the Resident Engineer.

A. Description

Installation of field constructed utility structure shall comply with utility standard specifications and/or as directed by the facility operator in consultation with the Resident Engineer and shall include:

- Service Boxes (various sizes)
- Manholes (various sizes)

Where approved by the facility operator, telephone structures may as an alternate be constructed of precast reinforced concrete.

B. Materials

The facility operator will furnish cable racks, pulling-in irons, sump castings, hardware, manhole steps/ladder supports and cast iron frames and covers. All other materials required for a complete manhole installation including concrete, reinforcing steel and structural steel shall be supplied by the Contractor and shall comply with the standards of the facility operator.

The Contractor shall notify the facility operator a minimum of 30 days prior to manhole construction for scheduling materials to be furnished by the utility company. The Contractor shall pick up said materials at the facility operator's yard.

All concrete shall have a minimum compressive strength of 4,000 psi at 28 days.

Reinforcing steel shall be deformed bars conforming to ASTM, Grade 60.

Structural steel shall conform to the requirements of ASTM A-36. Bolts shall conform with the requirements of ASTM A-325.

The Contractor shall supply all necessary materials (mortar, concrete, brick, etc.) for sealing duct entrance windows in manholes and for constructing chimneys and bricking up castings to grade.

C. Method of Construction

All work shall comply with the utility specifications, plans, and standards of the facility operator.

Refer to specification JB 406 for excavation and sheeting requirements associated with telephone manhole construction. Where replacement manholes are indicated on the plans, the demolition

and removal of the existing manhole structure and the protection of existing cables and splices will be paid separately under JB 638R.

The Contractor shall perform the necessary field construction of the floor, walls, and roof of the utility structure as shown on the Plans and as directed by the facility operator in consultation with the Resident Engineer. No traffic shall be allowed on the structure until permitted by the facility operator in consultation with the Resident Engineer.

Field conditions may require the contractor to modify the design of the manhole structure, as directed by the facility operator in consultation with the Resident Engineer.

Refer to specification JB 636E for guidelines relating to the installation of new frames and covers.

All structural steel roof beams shall be ground free of burrs and painted with one shop coat and two field coats of finish paint. The Contractor shall make provisions for and incorporate into the manhole all required materials as shown on the Plans, standard utility details or as directed by the facility operator in consultation with the Resident Engineer.

The Contractor shall provide duct entry windows in the new manhole as shown on the Plans and as directed by the facility operator. All windows shall be properly sealed around new ducts per utility company requirements.

All cable racks and wall brackets shall be supported on walls with ½" dia. X 2-½" long galvanized steel machine bolts using ½" concrete inserts or expansion bolts. Vertical spacing of inserts shall not exceed 18" o.c. (typ).

The Contractor shall confirm placement of concrete inserts for cable rack supports, pulling-in irons, and other embedments shown on the Plans with the facility operator, in consultation with the Resident Engineer, prior to manhole construction.

All work shall be done in a workmanlike manner and any damage resulting from the Contractor's operations shall be satisfactorily corrected as directed by the facility operator in consultation with the Resident Engineer and at the Contractor's expense. The contractor shall perform the installation of the utility structure while maintaining, supporting, and protecting and accommodating the integrity of all utility facilities (without disruption of service) located within the areas of the excavation and the field constructed structure.

This item shall also apply when partially or totally rebuilding or modifying an existing utility structure.

The Contractor is advised that in lieu of poured-in-place structures the substitution of Precast Reinforced Concrete Structures that comply with Utility Specifications, will be permitted only when approved by the facility operator in consultation with the Resident Engineer, along with the following provisions:

1. Precast telephone manholes shall be constructed to the interior manhole dimensions and details shown on the Plans.

2. The Contractor shall submit shop drawings and design calculations for each precast manhole structure for review and approval by the facility operator and the Resident Engineer prior to fabrication. Shop drawings shall show the overall structure dimensions, roof openings, window sizes and locations, sump locations, reinforcing steel and details, construction joint types and locations including sealant material proposed. The inside face of all windows (4 sides) shall be beveled and provisions made for all inserts and hardware for a complete manhole installation, including cable pulling iron embedments and cable rack insert embedments in accordance with the standards and requirements of the facility operator.
3. Precast manhole design criteria shall be as follows:
    - Concrete Minimum Compressive Strength: 4,000 psi or greater at 28 days.
    - Steel Reinforcement: ASTM A-615, Grade 60.
    - Design Loading: AASHTO HS20-44
    - Shop drawings and calculations shall state design methodology used and all design assumptions including soil pressures and ground water levels used in the design.

4. A 9-inch thick compacted stone ballast leveling pad shall be provided as a foundation for all precast manholes.

D. Method of Measurement

The quantity to be measured for payment shall be the number of cubic yards (CY) of concrete, cast on site or pre-cast, as specified, concrete, brick, and mortar in place to the nearest hundredth of a cubic yard. No deductions will be made for the spaces occupied by steel reinforcement.

E. Price to Cover

The unit price under this item shall be a unit price per cubic yard (CY) of concrete, cast on site or pre-cast, as specified, concrete, brick, and mortar placed in the field constructed utility structure. The unit price shall cover the cost of all labor, materials, plant, equipment, insurance and incidentals required to field construct partially or totally, rebuild or modify, a utility structure. The unit price shall also include all formwork installation and removal, installation of concrete, bricks, mortar, steel reinforcement, structural steel beams, furnish and install pre-cast concrete, chimney, and installation of interior and exterior hardware, including frames and covers. The Contractor shall also install pipes, conduits, sumps, drains, sleeves, related steel or cast iron materials or equipment through the structures as shown on the drawings. Upon removal of forms, the Contractor shall remove debris and face off the entire interior of the structure. The unit price includes necessary realignment of existing ducts into the new structure up to five feet from the outside face of the new structure; any additional duct realignment required shall be paid under a separate JB item. The unit price shall further include the cost of maintaining, supporting, protecting and accommodating the integrity of all utility facilities (without disruption of service) during the work within the areas of excavation and the field constructed structure, and the furnishing of samples, as required. All work shall comply with the plans, specifications, standards, and directions of the facility operator in consultation with the Resident Engineer.

All pavement breaking, pavement removal and disposal, excavation, haul away, and disposal, furnish and install backfill, temporary pavement, sheeting, bracing, and all necessary incidentals shall be paid under item JB 406, only if required. All required break out and disposal of all types of conduits/duct banks in new structure area, including maintenance and support of cable shall be included in JB 638R. Where precast reinforced concrete manholes are used in lieu of poured in place manholes, the cost for furnishing, delivery and installation of the precast reinforced structures, additional excavation associated with the widening and deepening of trench due to increased width of precast structures and due to the placement of a stone ballast leveling pad; stone ballast; connections; and all work incidental thereto all in accordance with the Plans, Specification and Standards, shall be deemed included under this item. No additional or separate payments will be made for any work associated with the installation of precast reinforced structures.

The cost of providing an anti-freeze additive in concrete, when required, shall be paid for under Item 9.04 HW.

F. <u>References</u>

1. JB 406
2. JB 636E
3. JB 638R
4. Standard Utility Specifications and Drawings

JB 638RT – BREAK OUT AND REMOVE TELEPHONE/COMMUNICATIONS UTILITY STRUCTURE CONTAINING ACTIVE FACILITIES

A. Description

Under this section the Contractor shall provide all labor, materials, equipment, insurance and incidentals necessary to partially or totally break out and remove existing utility structures using methods approved by the facility operator. Breaking out and removing existing utility structures shall be performed while maintaining and protecting all subsurface facilities, at locations approved by the Facility Operator. The Contractor will encounter various underground facilities, located both inside and outside the utility structure, while partially or totally breaking out and removing existing utility structures and will be required to excavate and perform work over, under, adjacent to, around, in between and in close proximity of various congested configurations of multiple facilities, conduits, pipes and cables.

All work required to partially or totally break out and remove existing utility structures shall comply with standard utility specifications and/or as directed by the facility operator and shall include but not be limited to:

- Service Boxes (various sizes)
- Manholes (various sizes)
- Vaults (various sizes)
- Valve Boxes (various sizes)
- Concrete encased conduits containing cables

B. Materials

All materials used shall be supplied by the Contractor and comply with the standards of the facility operator.

C. Method of Construction

The Contractor shall perform the necessary breaking out and removal of the existing utility structure while maintaining and protecting all subsurface facilities. The Contractor will encounter various underground facilities located both inside and outside the utility structure, while partially or totally breaking out and removing existing utility structures and will be required to excavate and perform work over, under, adjacent to, around, in between and in close proximity of various congested configurations of multiple facilities, conduits, pipes and cables, as directed by the facility operator. All work shall be done in a workmanlike manner and any damage resulting from the Contractor's operations shall be satisfactorily corrected as directed by the facility operator and at the Contractor's expense.

This item shall also apply when partially or totally breaking out and removing an existing utility structure.

The rebuilding of the utility structure is covered under JB 638NT.

D. Method of Measurement

The quantity to be measured for payment shall be the number of cubic yards (CY) of concrete, reinforced concrete, brick, and mortar of the existing utility structure broken out, removed and disposed to the nearest hundredth of a cubic yard. No deductions will be made for the spaces occupied by steel reinforcement.

E. Price to Cover

The unit price bid under this item shall be a unit price per cubic yard (CY) of concrete, reinforced concrete, brick, and mortar of the existing utility structure broken out, removed and disposed. The unit price shall also cover the cost of all labor, materials, plant, equipment, insurance, and incidentals required to partially or totally break out, remove and dispose of existing utility structure. The unit price shall also include demolition of the existing utility structure, haul away and disposal of demolished materials, formwork, concrete, bricks, mortar, steel reinforcement, structural steel beams, interior hardware, exterior hardware, including frames and covers. The unit price shall further include the cost of maintaining, supporting, protecting and accommodating the integrity of all utility facilities (without disruption of service) during the work within the areas of excavation and the existing structure. All work shall comply with the plans, specifications and standards, provided by and at the directions of the facility operator.

The unit price shall include providing access to the facility operator tenants to verify and test cables before, during and after breaking out and removal of the utility and after conduit removal by the Contractor. The unit price shall include, but not limited to, opening and closing of fences; removal and replacement of temporary timber curb and opening and closing of traffic plates. Access to adjacent manholes impacted by the run is included in this item. JB 450 shall not be used in conjunction with JB 638RT as JB 638RT covers access to the work site at all times.

All pavement breaking, pavement removal and disposal, excavation, haul away, and disposal, furnish and install backfill, temporary pavement, sheeting, bracing, and all necessary incidentals shall be paid under item JB 406, only if required.

F. References

1. JB 406
2. Standard Utility Specifications and Drawings

JB 798 - MODIFICATION OF NON CONCRETE YOKE TROLLEY STRUCTURES REMOVAL WHEN CROSSING UTILITY FACILITES

A. Description

This JB item shall only be applied to trolley structure systems that do not contain concrete yoke foundations. This JB item shall only be used for trolley systems that have rails and wood ties only.

Under this section, the Contractor shall provide all incremental labor, equipment, insurance and incidentals required to maintain and protect and accommodate the integrity of utility facilities that include but are not limited to:

1. Conduits;
2. Conductors;
3. Concrete encased Conduit banks;
4. Steel Pipes; Steam Facilities;
5. Oil-o-static Facilities;
6. Non-cost Sharing Gas Facilities;
7. Steam Facilities;

of various sizes and configurations crossing trolley structures at various angles located within a zone of protection, as indicated on Sketch JB 798, during the removal of trolley structures and subsequent backfilling operations. Utility facilities that run parallel to trolley structures are not included within this item and will be paid for under the appropriate JB item. The work shall be performed in accordance with the contract plans, the specifications, and as encountered during construction and directed by the facility operator.

B. Materials – N/A

C. Method of Construction

The Contractor shall maintain, protect, and accommodate the integrity of all utility facilities of various sizes and configurations crossing trolley structures within a zone of protection as indicated in Sketch JB 798, during removal of trolley structures and subsequent backfilling and compaction operations under other contract item(s). The facility operator shall identify the locations of all utilities within the contract area as required by New York State Industrial Code Rule 753. As provided by the Rule, the Contractor shall use hand excavation methods (pick and shovel or hand held power tools) directly below the pavement base to expose the utility and ascertain the numerical relationships and/or dimensions of these utilities with respect to the proposed excavation. Contractor shall perform test pits at locations determined by the facility operator to expose utility as specified in JB 400. Upon exposing the affected utilities sufficiently, and at the sole discretion of the facility operator to determine relationships and/or dimensions, the Contractor shall be permitted to proceed with care to remove existing trolley structure within the zone of protection whose limit shall be defined as a distance of 24 inches from the outside face of each utility crossing.

D. Method of Measurement

The quantity to be measured for payment shall be the number of linear feet of modified trolley structure removal within the zone of protection as indicated on JB Sketch 798, measured along the centerline of trench. The trench is defined as one track set containing two rails. The zone of protection shall be defined, for the purpose of this agreement, as the boundary/area designated on the plans or a boundary/area 24 inches to either side of each of the designated facilities, based upon available records and/or information obtained from prior or new test pits, or any combination thereof. Where overlapping of the zones occurs due to multiple facilities, the boundary/area shall be modified to one zone measured from the outside limits. The contract item specified under this section shall not be measured for payment in conjunction with other types of utility items. Modifications to work methods required in areas between zones of protection for multiple utilities or JB facilities shall not be measured for payment and are included in the price bid for this item.

E. Price to Cover

The unit price per linear foot shall include the incremental cost for all labor, equipment, insurance and incidentals required to maintain and protect and accommodate the integrity of utility facilities during the removal of trolley structures (including rails, timber ties, trolley conduits and main conduit), and backfilling and compacting within a zoned area designated for protection of utilities by the facility operator.

The price shall include any additional cutting, removing and disposing of roadway materials; hand or machine excavation; trucking and disposing of excavated materials, installation and removal of sheeting; and furnishing, installing and compacting backfill that may be required to support, protect, maintain and accommodate the integrity of utility facilities. The price shall also include means to ascertain the numerical relationship between utility and the trolley structure and the incremental cost for providing all vehicular and pedestrian traffic maintenance necessary to perform the work.

The Contractor shall be responsible for any and all damages resulting from and/or due to trolley demolition operations that are not performed in accordance with the specifications.

When this work is performed within a mass excavation area, a credit will be taken for the removed trolley structure.

F. References

1. NYS Industrial Code Rule 753
2. Sketch JB 798

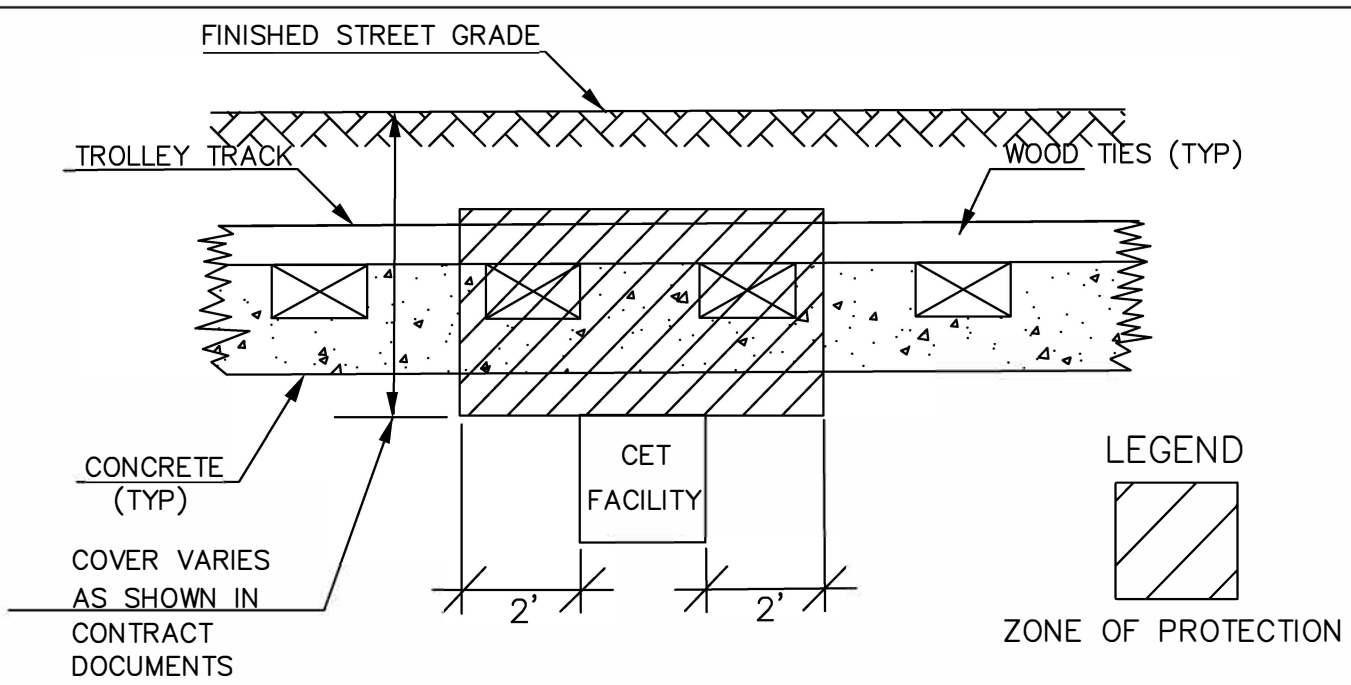

SECTION OF CET FACILITIES CROSSING TROLLEY TRACKS

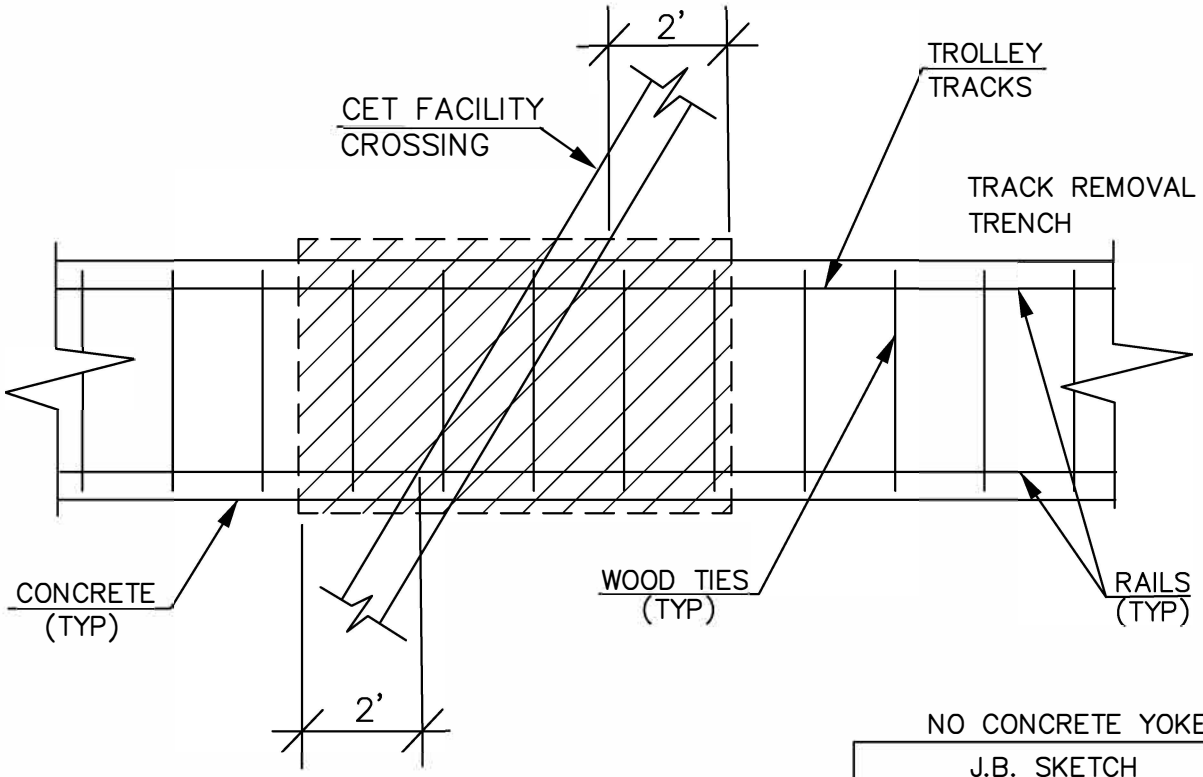

PLAN OF CET FACILITIES CROSSING TROLLEY TRACKS

NO CONCRETE YOKE

J.B. SKETCH

CET ACCOMODATION SECTIONS CROSSING TROLLEY RAILROAD STRUCTURES

REVISIONS	CONTRACT NO.	SKETCH NO.
09/13/2017		JB 798

JB 799 - MODIFICATION OF NON CONCRETE TROLLEY STRUCTURES REMOVAL PARALLEL TO UTILITY FACILITIES

A. Description

This JB item shall only be applied to trolley structure systems that do not contain concrete yoke foundations. This JB item shall only be used for trolley systems that have rails and wood ties only.

Under this section, the Contractor shall provide all incremental labor, equipment, insurance and incidentals required to maintain, protect, support and accommodate the integrity of utility facilities that include but are not limited to:

1. Conduits;
2. Conductors;
3. Concrete encased Conduit banks;
4. Steel Pipes; Steam Facilities;
5. Oil-o-static Facilities; and
6. Non-cost Sharing Gas Facilities;
7. Steam Facilities.

of various sizes and configurations paralleling or encroaching trolley structures located within a zone of protection, as indicated on the Plans or as directed by the field representative, during all trolley structure removal operations and subsequent backfilling operations. Utility facilities which cross over, under and between the trolley structures are not included within this item and will be paid for under the appropriate JB item. The work shall be performed in accordance with the contract plans, the specifications, and as encountered during construction and directed by the facility operator(s).

B. Materials – N/A

C. Method of Construction

The Contractor shall maintain, protect, support and accommodate the integrity of all utility facilities of various sizes and configurations paralleling or encroaching trolley structures within a zone of protection as indicated on the Plans or as directed by the field representative, during removal of trolley structures and subsequent backfilling and compaction operations under other contract item(s). The facility operator(s) shall identify the locations of all utilities within the contract area as required by New York State Industrial Code Rule 753. As provided by the Rule, the Contractor shall use hand excavation methods (pick and shovel or hand held power tools) directly below the pavement base to expose the utility and ascertain the numerical relationships and/or dimensions of these utilities with respect to the proposed excavation. Contractor shall perform test pits at locations determined by the facility operator to expose utility as specified in JB 400. Upon exposing the affected utilities sufficiently, and at the sole discretion of the facility operator(s) to determine relationships and/or dimensions, the Contractor shall be permitted to proceed with care to remove existing trolley structure within the zone of protection whose limit shall be defined as a distance of 24 inches from the outside face of each utility to the edge of the trolley structure.

D. Method of Measurement

The quantity to be measured for payment shall be the number of linear feet of modified trolley structure removal within the zone of protection as indicated on the plans, measured along the centerline of trench. The trench is defined as one track set containing two rails. The contract item specified under this section shall not be measured for payment in conjunction with other types of utility items. Modifications to work methods required in areas between zones of protection for multiple utilities or JB facilities shall not be measured for payment and are included in the price bid for this item.

E. Price to Cover

The unit price per linear foot shall include the incremental cost for all labor, equipment, insurance and incidentals required to maintain, protect, support and accommodate the integrity of utility facilities paralleling or encroaching trolley structures during the removal of trolley structures (including rails, timber ties, trolley conduits, and main conduits), and backfilling and compacting within a zoned area designated for protection of utilities by the facility operator(s).

The unit price shall also include any additional cutting, removing and disposing of roadway materials; hand or machine excavation; trucking and disposing of excavated materials, installation and removal of sheeting; and furnishing, installing and compacting backfill that may be required to support, protect, maintain and accommodate the integrity of utility facilities. The price shall also include means to ascertain the numerical relationship between utility and the trolley structure, and the incremental cost for providing all vehicular and pedestrian traffic maintenance necessary to perform the work.

The Contractor shall be responsible for any and all damages resulting from and/or due to trolley demolition operations that are not performed in accordance with the specifications.

When this work is performed within a mass excavation area, a credit will be taken for the removed trolley structure.

F. References

1. NYS Industrial Code Rule 753
2. Sketch JB 799

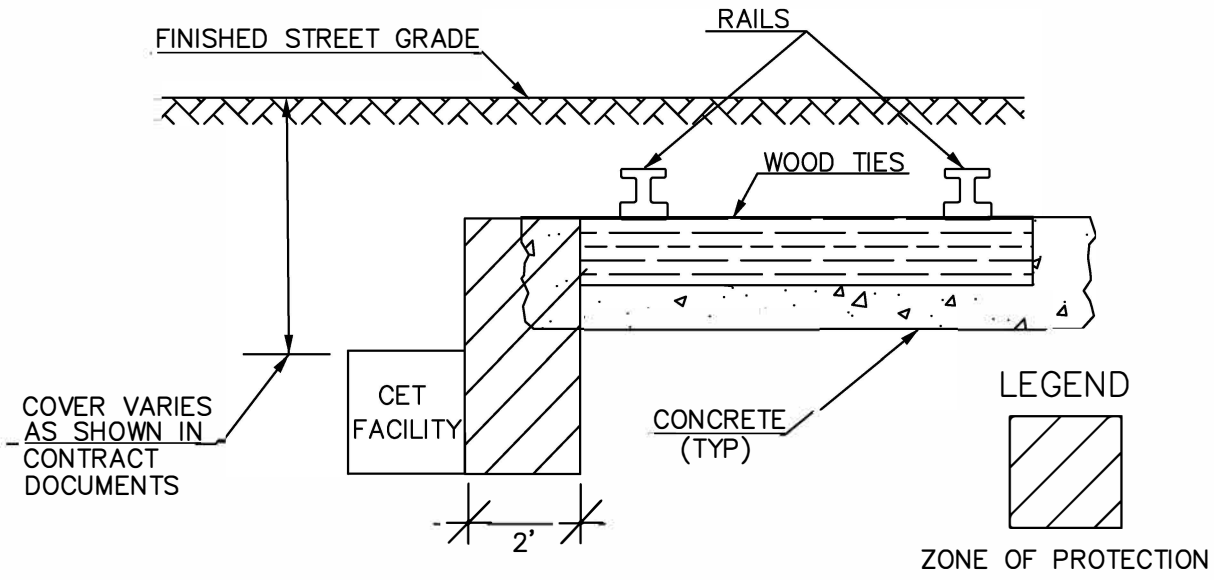

SECTION OF CET FACILITIES PARALLELING TROLLEY TRACKS

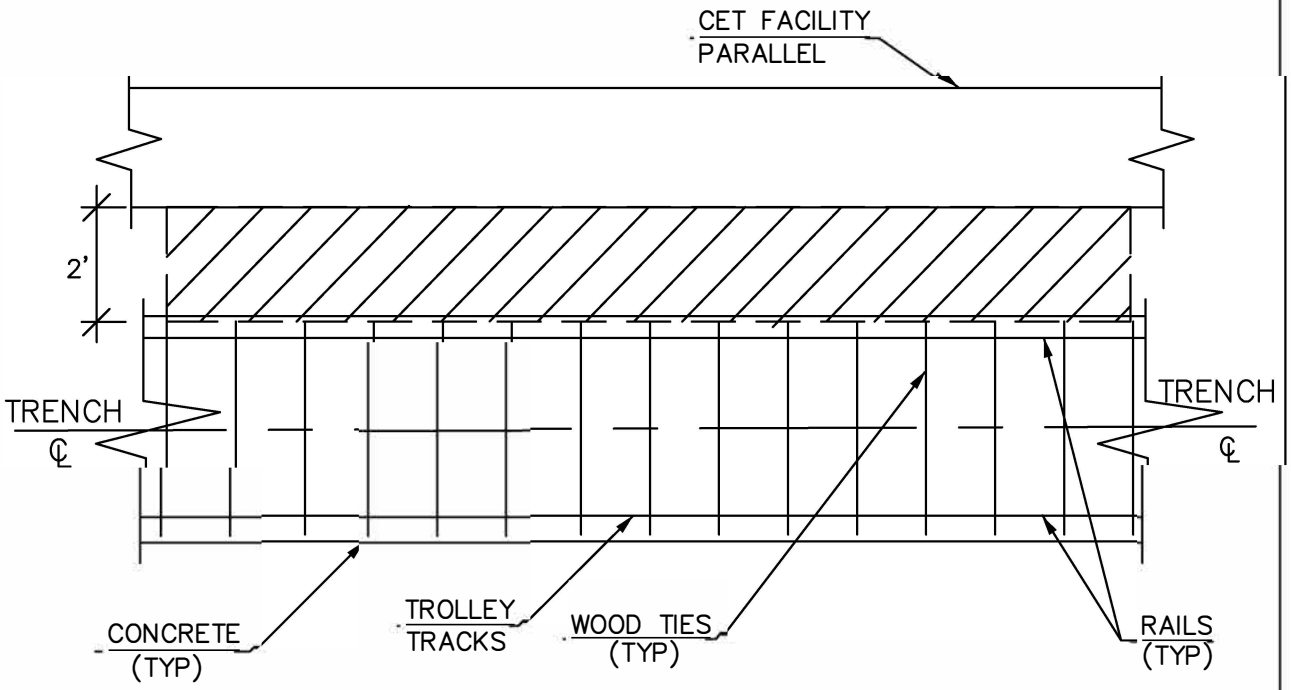

NO CONCRETE YOKE

PLAN OF CET FACILITIES PARALLELING TROLLEY TRACKS

J.B. SKETCH	
CET ACCOMODATION FACILITIES PARALLEL TROLLEY RAILROAD STRUCTURES	
CONTRACT NO.	SKETCH NO. JB 799

REVISIONS
09/13/2017

JB 800 - MODIFICATION OF CONCRETE YOKE TROLLEY STRUCTURES REMOVAL WHEN CROSSING UTILITY FACILITES

A. Description

This JB item shall only be applied to trolley structure systems that contain concrete yoke foundations. This JB item shall not be used for trolley systems that have rails and wood ties only.

Under this section, the Contractor shall provide all incremental labor, equipment, insurance and incidentals required to maintain and protect and accommodate the integrity of utility facilities that include but are not limited to:

1. Conduits
2. Conductors
3. Concrete encased conduit banks
4. Steel pipes
5. Oil-o-static facilities
6. Non-cost Sharing Gas Facilities and
7. Steam Facilities

of various sizes and configurations crossing trolley structures at various angles located within a zone of protection, as indicated on Sketch JB 800, during the removal of trolley structures and subsequent backfilling operations. Utility facilities that run parallel to trolley structures are not included within this item and will be paid for under the appropriate JB item. The work shall be performed in accordance with the contract plans, the specifications, and as encountered during construction and directed by the facility operator.

B. Materials – N/A

C. Method of Construction

The Contractor shall maintain, protect, and accommodate the integrity of all utility facilities of various sizes and configurations crossing trolley structures within a zone of protection as indicated in Sketch JB 800, during removal of trolley structures and subsequent backfilling and compaction operations under other contract item(s). The facility operator shall identify the locations of all utilities within the contract area as required by New York State Industrial Code Rule 753. As provided by the Rule, the Contractor shall use hand excavation methods (pick and shovel or hand held power tools) directly below the pavement base to expose the utility and ascertain the numerical relationships and/or dimensions of these utilities with respect to the proposed excavation. Contractor shall perform test pits to expose the utilities as specified under JB 400. Upon exposing the affected utilities sufficiently, and at the sole discretion of the facility operator to determine relationships and/or dimensions, the Contractor shall be permitted to proceed with hand held power tools to remove existing trolley structure within the zone of protection whose limit shall be defined as a perimeter located 24 inches from the outside face of each utility crossing.

D. Method of Measurement

The quantity to be measured for payment shall be the number of linear feet of modified trolley structure removal within the zone of protection as indicated on JB Sketch 800, measured along the centerline of trench. The trench is defined as one track set containing two rails. The zone of protection shall be defined, for the purpose of this agreement, as the boundary/area designated on the plans or a boundary/area 3 feet to either side of each of the designated facilities, based upon available records and/or information obtained from prior or new test pits, or any combination thereof. Where overlapping of the zones occurs due to multiple facilities, the boundary/area shall be modified to one zone measured from the outside limits. The contract item specified under this section shall not be measured for payment in conjunction with other types of utility items. Modifications to work methods required in areas between zones of protection for multiple utilities or JB facilities shall not be measured for payment and are included in the price bid for this item.

E. Price to Cover

The unit price per linear foot shall include the incremental cost for all labor, equipment, insurance and incidentals required to maintain and protect and accommodate the integrity of utility facilities during the removal of trolley structures (including rails, timber ties, yokes, trolley conduits, main conduit, rail and yoke foundations), and backfilling and compacting within a zoned area designated for protection of utilities by the facility operator.

The unit price shall also include any additional cutting, removing and disposing of roadway materials; hand or machine excavation; trucking and disposing of excavated materials, installation and removal of sheeting; and furnishing, installing and compacting backfill that may be required to support, protect, maintain and accommodate the integrity of utility facilities. The unit price shall also include the incremental cost for providing all vehicular and pedestrian traffic maintenance necessary to perform the work.

The Contractor shall be responsible for any and all damages resulting from and/or due to trolley demolition operations that are not performed in accordance with the specifications.

When this work is performed within a mass excavation area, a credit will be taken for the removed trolley structure.

F. References

1. NYS Industrial Code Rule 753
2. Sketch JB 800

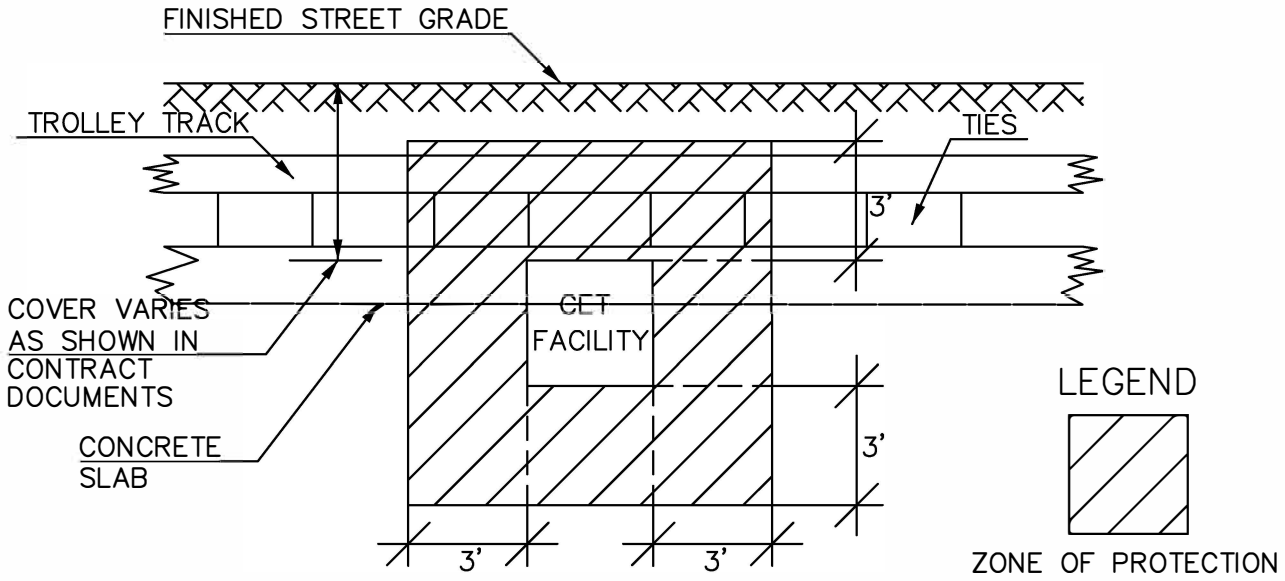

SECTION OF CET FACILITIES CROSSING TROLLEY TRACKS

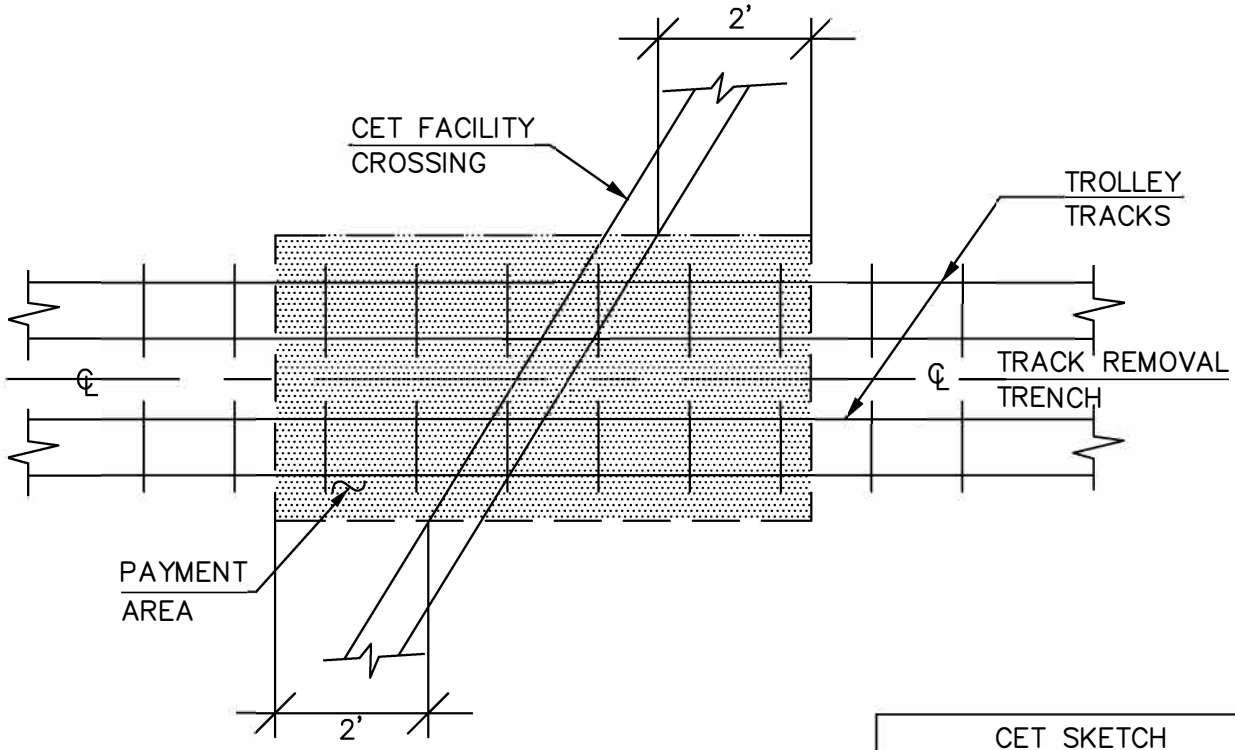

PLAN OF CET FACILITIES CROSSING TROLLEY TRACKS

CET SKETCH		
CET ACCOMODATION SECTIONS AT TROLLEY RAILROAD STRUCTURES		
REVISIONS		
09/13/2017	CONTRACT NO.	SKETCH NO. JB 800

JB 801 - MODIFICATION OF CONCRETE YOKE TROLLEY STRUCTURES REMOVAL PARALLEL TO UTILITY FACILITIES

A. Description

This JB item shall only be applied to trolley structure systems that contain concrete yoke foundations. This JB item shall not be used for trolley systems that have rails and wood ties only.

Under this section, the Contractor shall provide all incremental labor, equipment, insurance and incidentals required to maintain, protect, support and accommodate the integrity of utility facilities that include but are not limited to:

1. Conduits
2. Conductors
3. Concrete encased conduit banks
4. Steel pipes
5. Oil-o-static facilities
6. Non-cost sharing gas facilities and
7. Steam facilities

of various sizes and configurations paralleling or encroaching trolley structures located within a zone of protection, as indicated in sketch JB 801 or as directed by the field representative, during all trolley structure removal operations and subsequent backfilling operations. Utility facilities which cross over, under and between the trolley structures are not included within this item and will be paid for under the appropriate JB item. The work shall be performed in accordance with the contract plans, the specifications, and as encountered during construction and directed by the facility operator(s).

B. Materials – N/A

C. Method of Construction

The Contractor shall maintain, protect, support and accommodate the integrity of all utility facilities of various sizes and configurations paralleling or encroaching trolley structures within a zone of protection as indicated in sketch 801 or as directed by the field representative, during removal of trolley structures and subsequent backfilling and compaction operations under other contract item(s). The facility operator(s) shall identify the locations of all utilities within the contract area as required by New York State Industrial Code Rule 753. As provided by the Rule, the Contractor shall use hand excavation methods (pick and shovel or hand held power tools) directly below the pavement base to expose the utility and ascertain the numerical relationships and/or dimensions of these utilities with respect to the proposed excavation. Contractor shall perform test pits to expose the utilities as specified under JB 400. Upon exposing the affected utilities sufficiently, and at the sole discretion of the facility operator(s) to determine relationships and/or dimensions, the Contractor shall be permitted to proceed with hand held power tools to remove existing trolley structure within the zone of protection whose limit shall be defined as a perimeter located 24 inches from the outside face of each utility.

D. Method of Measurement

The quantity to be measured for payment shall be the number of linear feet of modified trolley structure removal within the zone of protection as indicated on the plans, measured along the centerline of trench. The trench is defined as one track set containing two rails. The contract item specified under this section shall not be measured for payment in conjunction with other types of utility items. Modifications to work methods required in areas between zones of protection for multiple utilities or JB facilities shall not be measured for payment and are included in the price bid for this item.

E. Price to Cover

The unit price per linear foot shall include the incremental cost for all labor, equipment, insurance and incidentals required to maintain, protect, support and accommodate the integrity of utility facilities paralleling or encroaching trolley structures during the removal of trolley structures (including rails, timber ties, yokes, trolley conduits, main conduit, rail and yoke foundations), and backfilling and compacting within a zoned area designated for protection of utilities by the facility operator(s).

The unit price shall also include any additional cutting, removing and disposing of roadway materials; hand or machine excavation; trucking and disposing of excavated materials, installation and removal of sheeting; and furnishing, installing and compacting backfill that may be required to support, protect, maintain and accommodate the integrity of utility facilities. The unit price shall also include the incremental cost for providing all vehicular and pedestrian traffic maintenance necessary to perform the work.

The Contractor shall be responsible for any and all damages resulting from and/or due to trolley demolition operations that are not performed in accordance with the specifications.

When this work is performed within a mass excavation area, a credit will be taken for the removed trolley structure.

F. References

1. NYS Industrial Code Rule 753
2. Sketch JB 801

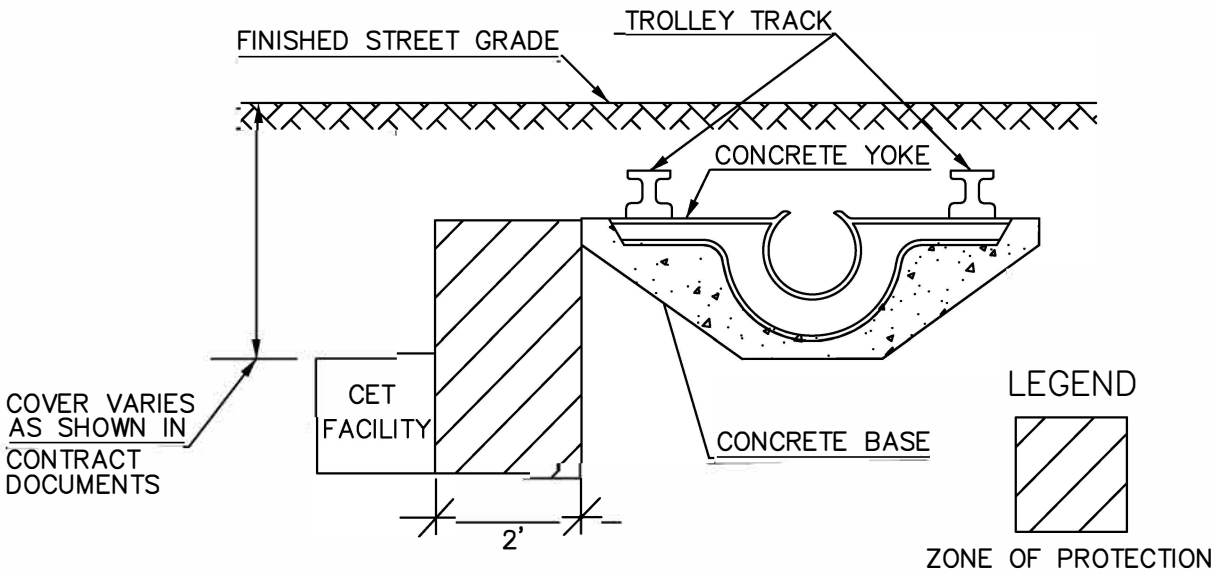

SECTION OF CET FACILITIES PARALLELING TROLLEY TRACKS

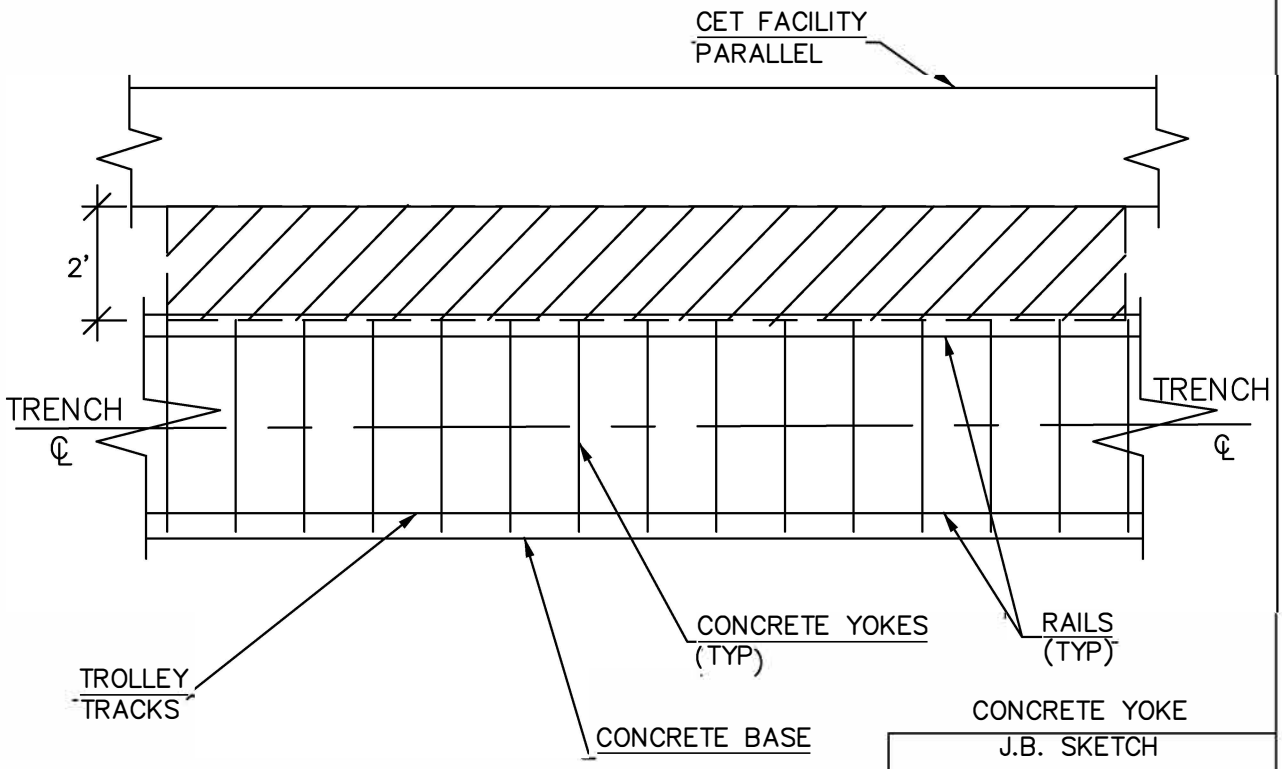

PLAN OF CET FACILITIES PARALLELING TROLLEY TRACKS

CONCRETE YOKE J.B. SKETCH		
CET ACCOMODATION FACILITIES PARALLEL TROLLEY RAILROAD STRUCTURES		
REVISIONS		
09/13/2017	CONTRACT NO.	SKETCH NO. JB 801

JB 802 - SPECIAL MODIFICATION OF WORK FOR INSTALLATION OF NEW CURBS AND SIDEWALKS

A. Description

Under this Section, the Contractor shall be required to modify work methods of installing new curb and sidewalk in order to maintain, protect and accommodate the integrity of private Utility Facilities located within a zone of protection immediately beneath existing sidewalk and curb designated to be replaced under other Contract items. The zone of protection shall define an area of curb and sidewalk where: work is within the vicinity of private Utility Facilities as shown on the Special Care Excavation Plan or where utilities are encountered during construction that are within 18 inches of either face of curb and/or 12 inches of the base material of proposed curb and/or sidewalk.

B. Materials – N/A

C. Method of Operation/Construction

Once clearances have been verified by available records to the satisfaction of the facility operator, the Contractor shall exercise extreme caution to install new curb and sidewalks within zoned areas of protection. Exercising extreme caution shall mean utilizing appropriate methods of operation/construction, special operations and sequencing, and by employing hand labor, using hand held tools only, under the personal direction of the appropriate facility operator. The work shall incorporate, but not be limited by, the following restrictions:

1. Removal of Existing Curb and Sidewalk

Removal of existing curb and sidewalk material shall be performed by saw cutting the curb and sidewalk, for a depth of not less than 2", to assist the Contractor in breaking up the concrete curb and sidewalk for removal by hand. Curb and sidewalk removal shall be done with hand labor, using hand held tools only while working from adjacent undisturbed sidewalk and/or pavement. Furthermore, it shall be understood to mean that digging and/or excavating directly with power-mechanized earth moving equipment will not be permitted. Power mechanized earth moving equipment may only be used as a depository of material removed from the excavation by hand as described above. All equipment, methods, and maintenance and protection provisions shall require full authorization by the facility operator.

2. Preparation and Installation of New Curb and Temporary and New Sidewalk

Backfilling, filling, grading of sub base, and installation of new curb and both temporary and new sidewalk, as required under other Contract Items, shall be performed utilizing materials, equipment and methods of construction that will insure the integrity of the private utility facilities and at the same time meet all requirements for this work as specified in other sections of this contract.

3. Compaction

The Contractor shall compact all sub-grade and new sub-base materials by utilizing native and/or blended fill material, equipment and methods of construction that will ensure integrity of private Utility Facilities and at the same time meet all requirements for compaction as specified in Section 4.11 of the Standard Highway Specifications.

4. Powered Excavating Equipment Limitations

The Contractor shall not employ powered or mechanical excavating equipment within the zone of protection. Powered or mechanical excavating equipment may only be used as a depository for material removed from the excavation by hand as described above.

The Contractor shall not be permitted to store, stand and/or travel equipment/vehicles on specified unpaved zoned protection areas.

D. <u>Method of Measurement</u>

1. ITEM JB 802A

The quantity of "Special Care Excavation and Restoration for Sidewalk Work" to be measured for payment shall be the number of square feet (SF of new sidewalk actually installed under other contract items within the zone of protection areas requested by the facility operator. For payment purposes, the horizontal limits for a zone of protection area shall be defined as the area designated on the plans or an area equal to the length of the designated facility multiplied by its width plus 18 inches on each side. Where overlapping of zones occur due to multiple facilities, the area will be modified to one zone measured from the outside limits. Where the 18-inch area falls beyond the curb line the outside boundary shall be the curb line.

2. ITEM JB 802B

The quantity of "Special Care Excavation and Restoration for Curb Work" to be measured for payment shall be equal to the number of linear feet (LF) of new curb actually installed under other contract items within the zone of protection areas requested by the facility operator.

E. Price to Cover

1. ITEM JB 802A

The contract price per square foot for "Special Care Excavation and Restoration for Sidewalk Work" shall be the incremental cost difference of all labor, materials, equipment, insurance and incidentals required for excavation and disposal of pavement, base and all other material to new sub-grade within and adjacent to zone of protection areas; saw cutting, grading, preparation of sub-grades, backfilling and compaction within zone of protection areas; all in accordance with the plans, the specifications and the directions of the facility operator. The price shall further include the cost of maintaining, protecting and accommodating the integrity of private Utility Facilities during the performance of sidewalk reconstruction (under other Contract Items within zone of protection areas designated on the plans or as directed by the facility operator.

2. ITEM JB 802B

The contract price per linear foot for "Special Care Excavation and Restoration for Curb Work" shall be the incremental cost difference of all labor, materials, equipment, insurance and incidentals required to install new curbs and temporary restoration material under other Contract items, within and adjacent to zone of protection areas; all in accordance with the plans, the specifications and the directions of the facility operator. The price shall further include the cost of maintaining, protecting, and accommodating the integrity of private Utility Facilities during the performance of curb reconstruction (under other Contract Items within zone of protection areas designated on the plans or as directed by the facility operator.

Payment for all work specified herein shall be made on a one-time basis only; no payment will be made for the same area of sidewalk or length of curb more than one time. In addition, work under these items shall not be paid in combination with other utility items.

F. References

1. Section 4.11 Standard Highway Specification

JB 803 - LINE CUT BY PNEUMATIC TOOLS IN LIEU OF SAW CUT ASSOCIATED WITH ROADWAY REMOVAL OPERATIONS

A. Description

Under this section, the Contractor shall provide all incremental labor, equipment, insurance and incidentals required to maintain, protect, support and accommodate the integrity of utility facilities that include but are not limited to oil o static facilities, and any other facilities of various sizes and configurations paralleling or crossing proposed saw cut areas located within a zone of protection associated with roadway removal operations, as determined by the utility operator. Utility facilities which cross under and between the saw cut area are included within this item. The work shall be performed in accordance with the contract plans, the specifications, and as encountered during construction and determined by the facility operator(s).

B. Materials – N/A

C. Method of Construction

The Contractor shall maintain, protect, support and accommodate the integrity of all utility facilities of various sizes and configurations paralleling or crossing the saw cut area within a zone of protection as determined by the Facility Operator, during the roadway saw cut. The facility operator(s) shall identify the locations of all utilities within the contract area as required by New York State Industrial Code Rule 753. As provided by the Rule, the Contractor shall use pneumatic tools to line cut the pavement in lieu of saw cut by machine. It is the sole discretion of the facility operator(s) to determine relationships and/or dimensions, and advise the Contractor to proceed with pneumatic tools to line cut existing roadway structure.

D. Method of Measurement

The quantity to be measured for payment shall be the number of linear feet of line cut performed by pneumatic tools measured along the length of cut. The contract item specified under this section shall not be measured for payment in conjunction with other types of utility items. Modifications to work methods required in areas between zones of protection for multiple utilities or JB facilities shall not be measured for payment and are included in the price bid for this item.

JB 803.1 Line cut Asphalt Roadway (LF)
JB 803.2 Line cut any combination of Asphalt and Concrete Roadway (LF)
JB 803.3 Line cut any combination of Asphalt, Concrete, and Belgium Block (LF)

E. Price to Cover

The unit price per linear foot shall include the incremental cost for all labor, equipment, insurance and incidentals required to maintain, protect, support and accommodate the integrity of utility facilities paralleling or crossing the saw cut area associated with the removal of roadway designated for protection of utilities by the facility operator(s).

The unit price shall also include any additional cutting, removing and disposing of roadway materials; and any backfill that may be required to support, protect, maintain and accommodate the integrity of utility facilities. The price shall also include the incremental cost for providing all vehicular and pedestrian traffic maintenance necessary to perform the work.

The Contractor shall be responsible for any and all damages resulting from and/or due to saw cutting operations that are not performed in accordance with the specifications.

F. References

1. NYS Industrial Code Rule 753

LISTING OF COMPANIES NAMED FOR THIS CONTRACT

QED1063AC

INSTALLATION OF DISTRIBUTION WATER MAINS
BOROUGH OF THE BRONX & QUEENS

COMPANY NAME	CONTACT NAME	CONTACT	EMAIL
THE CONSOLIDATED EDISON COMPANY OF NEW YORK, INC.	DENNISSE AGUGLIARO	(718) 802-3020	AGUGLIARODE@CONED.COM
EMPIRE CITY SUBWAY COMPANY, (LIMITED)	SANDRA SMITH	(212) 519-4914	SANDRA.SMITH@VERIZON.COM
CROWN CASTLE	ROBERT ILARIO JOHN	(917) 881-0331	ROBERT.ILARIO@CROWNCASTLE.COM
ALTICE	AL CLARK	(516) 315-1753	AL.clark@Alticeusa.com

JOINT BID WORKSHEET

ENGINEER'S ESTIMATE OF QUANTITY AND TYPES OF INTERFERENCE
FOR CONSOLIDATED EDISON COMPANY OF NEW YORK

QED1063AC

INSTALLATION OF DISTRIBUTION WATER MAINS
BOROUGH OF BRONX

JOINT BID ITEM NUMBER	DESCRIPTION	UNITS	ESTIMATED QUANTITY
JB 108.1	UTILITIES CROSSING TRENCH FOR WATER MAIN UP TO AND INCLUDING 12" DIAMETER (TYPE .1)	EA	7
JB 108.2	UTILITIES CROSSING TRENCH FOR WATER MAIN UP TO AND INCLUDING 12" DIAMETER (TYPE .2)	EA	5
JB 300.1	SPECIAL CARE EXCAVATION AND BACKFILLING IN TRENCH LESS THAN 5' DEEP	CY	30
JB 300.2	SPECIAL CARE EXCAVATION AND BACKFILLING IN TRENCH GREATER THAN 5' DEEP	CY	44
JB 301	SPECIAL CARE EXCAVATION AND BACKFILLING FOR OIL-O-STATIC PIPE	CY	111
JB 303	FURNISH, DELIVER AND INSTALL TYPE 3/8 CLEAN SAND BACKFILL	CY	93
JB 330E	SUPPORT AND PROTECTION OF UTILITY FACILITIES DURING EXCAVATION	LF	62
JB 400	TEST PITS FOR UTILITY FACILITIES	CY	15
JB 450.1	CONSTRUCTION FIELD SUPPORT - SURVEY CREW (TYPE .1)	CRHRS	15
JB 450.2	CONSTRUCTION FIELD SUPPORT - SMALL SIZE CREW (TYPE .2)	CRHRS	10
JB 803.2	LINE CUT BY PNEUMATIC TOOLS IN LIEU OF SAW CUT ASSOCIATED WITH ROADWAY REMOVAL OPERATIONS (LINE CUT ANY COMBINATION OF	LF	50
JB 9.28	Utility Expanded Work Allowance	FS	1

CON EDISON JOINT BIDDING SCOPE OF WORK
SUPPORT AND PROTECTION
QED1063AC
INSTALLATION OF DISTRIBUTION WATER MAINS
BOROUGH OF BRONX

JB 108.1 **UTILITIES CROSSING TRENCH FOR WATER MAIN UP TO AND INCLUDING 12" DIAMETER (TYPE .1)** **EA**

At the following locations:

Bainbridge Ave.Bet. E KingSBridge Rd. and Coles La
Bainbridge Ave.Bet. Coles La and E 93 St.
E 93 St.Bet. Marion Ave. and Bainbridge Ave.

Total Quantity for JB 108.1 = 7

JB 108.2 **UTILITIES CROSSING TRENCH FOR WATER MAIN UP TO AND INCLUDING 12" DIAMETER (TYPE .2)** **EA**

At the following locations:

Various Locations

Total Quantity for JB 108.2 = 5

JB 300.1 **SPECIAL CARE EXCAVATION AND BACKFILLING IN TRENCH LESS THAN 5' DEEP** **CY**

At the following locations:

Poe Pl. and Coles La

Total Quantity for JB 300.1 = 30

JB 300.2 **SPECIAL CARE EXCAVATION AND BACKFILLING IN TRENCH GREATER THAN 5' DEEP** **CY**

At the following locations:

Poe Pl. and Coles La

Total Quantity for JB 300.2 = 44

JB 301 **SPECIAL CARE EXCAVATION AND BACKFILLING FOR OIL-O-STATIC PIPE** **CY**

At the following locations:

E. 193rd St. and Marion Ave.

Total Quantity for JB 301 = 111

JB 303 **FURNISH, DELIVER AND INSTALL TYPE 3/8 CLEAN SAND BACKFILL** **CY**

At the following locations:

E. 193rd St. and Marion Ave.

Total Quantity for JB 303 = 93

CON EDISON JOINT BIDDING SCOPE OF WORK
SUPPORT AND PROTECTION
QED1063AC
INSTALLATION OF DISTRIBUTION WATER MAINS
BOROUGH OF BRONX

JB 330E **SUPPORT AND PROTECTION OF UTILITY FACILITIES DURING EXCAVATION** **LF**

At the following locations:

E Fordham Rd. and Bainbridge Ave.
Various Locations

Total Quantity for JB 330E = 62

JB 400 **TEST PITS FOR UTILITY FACILITIES** **CY**

At the following locations:

Various Locations

Total Quantity for JB 400 = 15

JB 450.1 **CONSTRUCTION FIELD SUPPORT - SURVEY CREW (TYPE .1)** **CRHRS**

At the following locations:

Various Locations

Total Quantity for JB 450.1 = 15

JB 450.2 **CONSTRUCTION FIELD SUPPORT - SMALL SIZE CREW (TYPE .2)** **CRHRS**

At the following locations:

Various Locations

Total Quantity for JB 450.2 = 10

JB 803.2 **LINE CUT BY PNEUMATIC TOOLS IN LIEU OF SAW CUT ASSOCIATED WITH ROADWAY REMOVAL OPERATIONS (LINE CUT ANY COMBINATION OF ASPHALT AND CONCRETE ROADWAY)** **LF**

At the following locations:

Various Locations

Total Quantity for JB 803.2 = 50

JB 9.28 **Utility Expanded Work Allowance** **FS**

Various Locations as Required

Total Quantity for JB 9.28 = 1

JOINT BID WORKSHEET

ENGINEER'S ESTIMATE OF QUANTITY AND TYPES OF INTERFERENCE
FOR CONSOLIDATED EDISON COMPANY OF NEW YORK

QED1063AC

INSTALLATION OF DISTRIBUTION WATERMAINS
BOROUGH OF QUEENS

JOINT BID ITEM NUMBER	DESCRIPTION	UNITS	ESTIMATED QUANTITY
JB 108.1	UTILITIES CROSSING TRENCH FOR WATER MAIN UP TO AND INCLUDING 12" DIAMETER (TYPE .1)	EA	33
JB 108.2	UTILITIES CROSSING TRENCH FOR WATER MAIN UP TO AND INCLUDING 12" DIAMETER (TYPE .2)	EA	60
JB 108.3	UTILITIES CROSSING TRENCH FOR WATER MAIN UP TO AND INCLUDING 12" DIAMETER (TYPE .3)	EA	5
JB 300.1	SPECIAL CARE EXCAVATION AND BACKFILLING IN TRENCH LESS THAN 5' DEEP	CY	33
JB 300.2	SPECIAL CARE EXCAVATION AND BACKFILLING IN TRENCH GREATER THAN 5' DEEP	CY	13
JB 301	SPECIAL CARE EXCAVATION AND BACKFILLING FOR OIL-O-STATIC PIPE	CY	21
JB 303	FURNISH, DELIVER AND INSTALL TYPE 3/8 CLEAN SAND BACKFILL	CY	21
JB 330E	SUPPORT AND PROTECTION OF UTILITY FACILITIES DURING EXCAVATION	LF	246
JB 350	OVERHEAD ACCOMMODATION PROTECTION OF OVERHEAD FACILITIES POLES AND APPURTENANCES	LS	1
JB 351	INSTALL AND REMOVE "A" FRAME ON UTILITY POLES	EA	4
JB 400	TEST PITS FOR UTILITY FACILITIES	CY	92
JB 401	TRENCH EXCAVATION FOR ADJUSTMENT OF UTILITY FACILITIES	CY	132
JB 402.1	EXISTING CONCRETE ENCASED CONDUITS PLACED IN FINAL POSITION WITHOUT CONCRETE ENCASEMENT	LF	15
JB 402.2	EXISTING NON-CONCRETE ENCASED CONDUITS PLACED IN FINAL POSITION WITHOUT CONCRETE ENCASEMENT	LF	715
JB 403	PLACING STEEL PROTECTION PLATES FOR UTILITY FACILITIES	SF	100
JB 405.1	TRENCH EXCAVATION FOR INSTALLATION OF UTILITY FACILITIES WITH TOTAL DEPTHS LESS THAN FIVE FEET	CY	16
JB 406	EXCAVATION FOR UTILITY STRUCTURE	CY	50
JB 450.1	CONSTRUCTION FIELD SUPPORT - SURVEY CREW (TYPE .1)	CRHRS	60

JOINT BID WORKSHEET

ENGINEER'S ESTIMATE OF QUANTITY AND TYPES OF INTERFERENCE

FOR CONSOLIDATED EDISON COMPANY OF NEW YORK

QED1063AC

INSTALLATION OF DISTRIBUTION WATERMAINS

BOROUGH OF QUEENS

JOINT BID ITEM NUMBER	DESCRIPTION	UNITS	ESTIMATED QUANTITY
JB 450.2	CONSTRUCTION FIELD SUPPORT - SMALL SIZE CREW (TYPE .2)	CRHRS	60
JB 450.3	CONSTRUCTION FIELD SUPPORT - MEDIUM SIZE CREW (TYPE .3)	CRHRS	60
JB 500	REMOVAL OF ABANDONED UTILITY CONDUITS (NON-CONCRETE ENCASED)	LF	276
JB 501	REMOVAL OF ABANDONED MASONRY FOR UTILITY FACILITIES	CY	2
JB 603E.1	INSTALL UTILITY CONDUITS PLACED IN FINAL POSITION WITHOUT CONCRETE ENCASEMENT	LF	110
JB 636 R	REPAIR TO UTILITY STRUCTURES	CY	10
JB 636 MD	MODIFICATION OF WORK METHODS TO ACCOMMODATE UTILITY HARDWARE (30" TO UNDER 34" WIDTH)	EA	8
JB 638 N	INSTALLATION OF FIELD CONSTRUCTED UTILITIES STRUCTURES.	CY	34
JB 638 R	BREAK OUT AND REMOVE UTILITY STRUCTURE	CY	60
JB 710.1	REMOVAL OF ABANDONED UTILITY STEEL/CAST IRON/ PLASTIC PIPES, UP TO AND INCLUDING 12" DIAMETER PIPE	LF	60
JB 803.2	LINE CUT BY PNEUMATIC TOOLS IN LIEU OF SAW CUT ASSOCIATED WITH ROADWAY REMOVAL OPERATIONS (LINE CUT ANY COMBINATION OF	LF	120
JB 9.28	UTILITY EXPANDED WORK ALLOWANCE	FS	1

Rev-1 (09/17/25)

CON EDISON JOINT BIDDING SCOPE OF WORK
SUPPORT AND PROTECTION
QED1063AC
INSTALLATION OF DISTRIBUTION WATERMAINS
BOROUGH OF QUEENS

JB 108.1 **UTILITIES CROSSING TRENCH FOR WATER MAIN UP TO AND INCLUDING 12" DIAMETER (TYPE .1)** **EA**

At the following locations:

E/S Madison St., 55' N/N/C Seneca Ave.
F/O #1814 Madison St.
F/O #1816 Madison St.
F/O #1820 Madison St.
N/S Merrick Blvd., 90' E/E/C Baisley Blvd.
N Int. Merrick Blvd. and Sunbury Blvd.
N/S Merrick Blvd., 80' E/E/C Sunbury Rd.
S/S Merrick Blvd., 150' E/E/C Sunbury Rd.
N/S Merrick Blvd., 185' E/E/C Sunbury Rd.
F/O #125-07 Merrick Blvd.
F/O #125-21 Merrick Blvd.
Opp. #176-28 Sunbury Rd.
Opp. #176-24 Sunbury Rd.
Opp. #176-22 St. James Pl.
Opp. #176-20 Sunbury Rd.
F/O #176-11 St. James Pl.
Opp. #176-14 Sunbury Rd.
Opp. #176-06 Sunbury Rd.
Opp. #176-04 Sunbury Rd.
F/O #13162 Avery Ave.
F/O #13162 Avery Ave.
F/O #131-35 Avery Ave.
F/O #131-35 Avery Ave.
Opp. #131-88 Avery Ave.
N/E/C College Pt. Blvd. and Pople Ave.
F/O #4420, College Pt. Blvd.
E/S College Pt. Blvd., 50' N/N/C Pople Ave.
W/S College Pt. Blvd., 50' N/N/C Pople Ave.
F/O #13138 Sanford Av.
E/S College Pt. Blvd., 100' N/N/C 41st Rd.
N/S Pople Av., 25' E/E/C College Pt. Blvd.
Opp. #176-27 St. James Pl.

Total Quantity for JB 108.1 = 33

CON EDISON JOINT BIDDING SCOPE OF WORK
SUPPORT AND PROTECTION
QED1063AC
INSTALLATION OF DISTRIBUTION WATERMAINS
BOROUGH OF QUEENS

JB 108.2	**UTILITIES CROSSING TRENCH FOR WATER MAIN UP TO AND INCLUDING 12" DIAMETER (TYPE .2)**	**EA**

At the following locations:

S/E Int. Onderdonk Ave. and Madison St.
N/E Int. Onderdonk Ave. and Madison St.
N/W Int. Onderdonk Ave. and Madison St.
F/O #1855 Madison St.
S/S Merrick Blvd., 90' E/E/C Baisley Blvd.
F/O #122-29 Merrick Blvd.
S Int. Merrick Blvd. and Sunbury Blvd.
F/O #123-22 Merrick Blvd.
Opp. #174-60 125th Avenue
S/S Int. of Merrick Blvd. and 125th Ave.
S/E Int. Merrick Blvd. and 125th Ave.
S/S Merrick Blvd. 125' E/E/C 125th Ave.
N/S Sunbury Rd., 25' W/W/C Irwin Pl.
F/O #131-35 Avery Ave.
Opp. #131-10 Avery Ave.
Opp. #131-10 Avery Ave.
Opp. #131-10 Avery Ave.
E/S College Pt. Blvd., 50' S/S/C Avery Ave.
S/W/C College Pt. Blvd. and Avery Ave.
F/O #4441, College Pt. Blvd.
F/O #4439, College Pt. Blvd.
N/E/C College Pt. Blvd. and Pople Ave.
F/O #13174 College Pt. Blvd.
N/W Int. Sanford Ave. and Maple Ave.
Opp. #131-10 Maple Ave.
N Int. Sanford Ave. and Fuller Pl.
S/E Int. Sanford Ave. and Fuller Pl.
N Int. Sanford Ave. and Haight St.
N/W Int. Sanford Ave. and College Pt. Blvd.
S/W Int. Sanford Ave. and College Pt. Blvd.
N/E Int. Sanford Ave. and College Pt. Blvd.
S/E Int. Sanford Ave. and College Pt. Blvd.
N/E Int. College Pt. Blvd. and Maple Ave.
N/W Int. College Pt. Blvd. and Maple Ave.

CON EDISON JOINT BIDDING SCOPE OF WORK
SUPPORT AND PROTECTION
QED1063AC
INSTALLATION OF DISTRIBUTION WATERMAINS
BOROUGH OF QUEENS

W Int. College Pt. Blvd. and Maple Ave.
F/O #4120a College Pt. Blvd.
W Int. College Pt. Blvd. and 41st Rd.
E Int. College Pt. Blvd. and 41st Rd.
E/S College Pt. Blvd., 45' N/N/C 41st Rd.
Int. of Merrick Rd. and Sunbury Rd.
S/S Int. of Merrick Blvd. and 125th Ave.

Total Quantity for JB 108.2 = 60

JB 108.3 **UTILITIES CROSSING TRENCH FOR WATER MAIN UP TO AND INCLUDING 12" DIAMETER (TYPE .3)** **EA**

At the following locations:

E/S Madison St., 20' N/N/C Seneca Ave.
N/S Merrick Blvd., 40' E/E/C Baisley Blvd.
F/O #122-29 Merrick Blvd.
S/S Merrick Blvd. 135' E/E/C 125th Ave.
N/E/C College Pt. Blvd. and Avery Ave.

Total Quantity for JB 108.3 = 5

JB 300.1 **SPECIAL CARE EXCAVATION AND BACKFILLING IN TRENCH LESS THAN 5' DEEP** **CY**

At the following locations:

S/W Int. Seneca Ave. and Madison St.
N/W Int. Merrick Blvd. and Sunbury Blvd.
N/S Merrick Blvd., 80' E/E/C Sunbury Rd.
N/S Merrick Blvd. 125' E/E/C Ursina Rd.
S/W Int. 177th Pl. and 120th Ave.
W/S Delong St., 25' S/S/C 41st Ave.
N/E/C College Pt. Blvd. and Pople Ave.
W/S College Pt. Blvd., 25' N/N/C Avery Ave.

Total Quantity for JB 300.1 = 33

CON EDISON JOINT BIDDING SCOPE OF WORK
SUPPORT AND PROTECTION
QED1063AC
INSTALLATION OF DISTRIBUTION WATERMAINS
BOROUGH OF QUEENS

JB 300.2 **SPECIAL CARE EXCAVATION AND BACKFILLING IN TRENCH GREATER THAN 5' DEEP** **CY**

At the following locations:

F/O #122-20 Merrick Blvd.
S/S Merrick Rd. E/S Sunbury Rd.
S/S Merrick Blvd. E/S Sunbury Rd.

Total Quantity for JB 300.2 = 13

JB 301 **SPECIAL CARE EXCAVATION AND BACKFILLING FOR OIL-O-STATIC PIPE** **CY**

At the following locations:

S/S Int. of Merrick Blvd. and 125th Ave.
Int. of Onderdonk Ave. and Madison St.
Int. of Merrick Rd. and Sunbury Rd.

Total Quantity for JB 301 = 21

JB 303 **FURNISH, DELIVER AND INSTALL TYPE 3/8 CLEAN SAND BACKFILL** **CY**

At the following locations:

S/S Int. of Merrick Blvd. and 125th Ave.
Int. of Onderdonk Ave. and Madison St.
Int. of Merrick Rd. and Sunbury Rd.

Total Quantity for JB 303 = 21

CON EDISON JOINT BIDDING SCOPE OF WORK
SUPPORT AND PROTECTION
QED1063AC
INSTALLATION OF DISTRIBUTION WATERMAINS
BOROUGH OF QUEENS

JB 330E **SUPPORT AND PROTECTION OF UTILITY FACILITIES DURING EXCAVATION** **LF**

At the following locations:

S/W Int. Seneca Ave. and Madison St.
F/O #122-20 Merrick Blvd.
F/O #122-29 Merrick Blvd.
S/W Int. Merrick Blvd. and Sunbury Blvd.
S/S Merrick Blvd., 80' E/E/C Sunbury Rd.
S/S Merrick Blvd., 175' E/E/C Sunbury Rd.
F/O #123-30 Merrick Blvd.
F/O #123-40 Merrick Blvd.
N/S Int. of Merrick Blvd. and Ursina Rd.
Opp. #131-10 Avery Ave.
N/W/C College Pt. Blvd. and Avery Ave.
W Int. Sanford Ave. and Maple Ave.
F/O #13138 Sanford Av.
N/S Sanford Ave., 25' W/W/C College Pt. Blvd.
S/W Int. Sanford Ave. and College Pt. Blvd.
Int. of Maple Ave. and Haight Street
N Int. of Maple Ave. and Fuller Pl.
F/O #4118 College Pt. Blvd.
E Int. College Pt. Blvd. and 41st Rd.
S/W Int. Delong St. and Sanford Ave.
F/O #13101 Sanford Ave.
W Int. College Pt. Blvd. and 41st Rd.
E/S College Pt. Blvd., 25' S/S/C Avery Avenue
S/S Sanford Ave., 80' E/E/C Fuller Pl.

Total Quantity for JB 330E = 246

JB 350 **OVERHEAD ACCOMMODATION PROTECTION OF OVERHEAD FACILITIES POLES AND APPURTENANCES** **LS**

At the following locations:

Various

Total Quantity for JB 350 = 1

CON EDISON JOINT BIDDING SCOPE OF WORK
SUPPORT AND PROTECTION
QED1063AC
INSTALLATION OF DISTRIBUTION WATERMAINS
BOROUGH OF QUEENS

JB 351 — **INSTALL AND REMOVE " A " FRAME ON UTILITY POLES** — **AE**

At the following locations:

S/S Sandford Av., 2P/E Height Ave. (Up-12)
N/S 112th Av., 3 P/W 194th St. (Up-17)
N/S 112th Rd., 2 P/E 194th St. (Up-18)
N/S 112th RD., 4 P/E 194th St. (Up-18)

Total Quantity for JB 351 = 4

JB 400 — **TEST PITS FOR UTILITY FACILITIES** — **CY**

t the following locations:

S/E Int. Onderdonk Ave. and Madison St.
N/E Int. Onderdonk Ave. and Madison St.
S/S Int. of Merrick Blvd. and 125th Ave.
Various
Int. of Merrick Rd. and Sunbury Rd.

Total Quantity for JB 400 = 92

JB 401 — **TRENCH EXCAVATION FOR ADJUSTMENT OF UTILITY FACILITIES** — **CY**

t the following locations:

S/W Int. Seneca Ave. and Madison St.
F/O #122-29 Merrick Blvd.
F/O #125-07 Merrick Blvd.
Opp. #176-27 St. James Pl.
Opp. #131-88 Avery Ave.
F/O #1855 Madison St.
E/S Madison St., 20' N/N/C Seneca Ave.
W/S Ursina Rd., 30' N/N/C Merrick Blvd.
F/O #176-11 St. James Pl.
N/S Sunbury Rd., 25' W/W/C Irwin Pl.

Total Quantity for JB 401 = 132

JB 402.1 — **EXISTING CONCRETE ENCASED CONDUITS PLACED IN FINAL POSITION WITHOUT CONCRETE ENCASEMENT** — **LF**

t the following locations:

S/W Int. Seneca Ave. and Madison St.

Total Quantity for JB 402.1 = 15

CON EDISON JOINT BIDDING SCOPE OF WORK
SUPPORT AND PROTECTION
QED1063AC
INSTALLATION OF DISTRIBUTION WATERMAINS
BOROUGH OF QUEENS

JB 402.2 **EXISTING NON-CONCRETE ENCASED CONDUITS PLACED IN FINAL POSITION WITHOUT CONCRETE ENCASEMENT** **LF**

At the following locations:

F/O #122-29 Merrick Blvd.
F/O #125-07 Merrick Blvd.
Opp. #176-27 St. James Pl.
Opp. #131-88 Avery Ave.
F/O #1814 Madison St.
E/S Madison St., 20' N/N/C Seneca Ave.
W/S Ursina Rd., 30' N/N/C Merrick Blvd.
F/O #176-11 St. James Pl.
N/S Sunbury Rd., 25' W/W/C Irwin Pl.

Total Quantity for JB 402.2 = 715

JB 403 **PLACING STEEL PROTECTION PLATES FOR UTILITY FACILITIES** **SF**

At the following locations:

E/S Madison St., 20' N/N/C Seneca Ave.
F/O #122-29 Merrick Blvd.
W/S Ursina Rd., 30' N/N/C Merrick Blvd.
SPECIALTY ITEM

Total Quantity for JB 403 = 100

JB 405.1 **TRENCH EXCAVATION FOR INSTALLATION OF UTILITY FACILITIES WITH TOTAL DEPTHS LESS THAN FIVE FEET** **CY**

t the following locations:

F/O #123-30 Merrick Blvd.

Total Quantity for JB 405.1 = 16

JB 406 **EXCAVATION FOR UTILITY STRUCTURE** **CY**

t the following locations:

S/S Merrick Blvd. Bet. Baisley Blvd. to Sunbury Rd.

Total Quantity for JB 406 = 50

JB 450.1 **CONSTRUCTION FIELD SUPPORT - SURVEY CREW (TYPE .1)** **CRHRS**

At the following locations:

Various

Total Quantity for JB 450.1 = 60

JB 450.2 **CONSTRUCTION FIELD SUPPORT - SMALL SIZE CREW (TYPE .2)** **CRHRS**

At the following locations:

Various

Total Quantity for JB 450.2 = 60

JB 450.3 **CONSTRUCTION FIELD SUPPORT - MEDIUM SIZE CREW (TYPE .3)** **CRHRS**

At the following locations:

Various

Total Quantity for JB 450.3 = 60

JB 500 **REMOVAL OF ABANDONED UTILITY CONDUITS (NON-CONCRETE ENCASED)** **LF**

At the following locations:

F/O #125-07 Merrick Blvd.
Opp. #176-27 St. James Pl.
F/O #123-30 Merrick Blvd.
W/S Ursina Rd., 30' N/N/C Merrick Blvd.
Opp. #131-88 Avery Ave.
F/O #176-11 St. James Pl.
N/S Sunbury Rd., 25' W/W/C Irwin Pl.

SPECIALTY ITEM

Total Quantity for JB 500 = 276

JB 501 **REMOVAL OF ABANDONED MASONRY FOR UTILITY FACILITIES** **CY**

At the following locations:

F/O #123-30 Merrick Blvd.
F/O #123-30 Merrick Blvd.

SPECIALTY ITEM

Total Quantity for JB 501 = 2

CON EDISON JOINT BIDDING SCOPE OF WORK SUPPORT AND PROTECTION

QED1063AC

INSTALLATION OF DISTRIBUTION WATERMAINS

BOROUGH OF QUEENS

JB 603E.1 **INSTALL UTILITY CONDUITS PLACED IN FINAL POSITION WITHOUT CONCRETE ENCASEMENT** **LF**

At the following locations:

F/O #123-30 Merrick Blvd.

SPECIALTY ITEM

Total Quantity for JB 603E.1 = 110

JB 636 MD **MODIFICATION OF WORK METHODS TO ACCOMMODATE UTILITY HARDWARE (30" TO UNDER 34" WIDTH)** **EA**

t the following locations:

S/W Int. Merrick Blvd. and Sunbury Blvd.

N/W Int. Merrick Blvd. and Sunbury Blvd.

S/S Merrick Blvd., 80' E/E/C Sunbury Rd.

S/S Merrick Blvd., 175' E/E/C Sunbury Rd.

S/S Int. of Merrick Blvd. and Ursina Rd.

N/S Merrick Blvd. 125' E/E/C Ursina Rd.

S/W Int. 177th Pl. and 120th Ave.

N/S Merrick Blvd., 80' E/E/C Sunbury Rd.

Total Quantity for JB 636 MD = 8

CON EDISON SCOPE OF WORK SUPPORT AND PROTECTION

QED1063AC

INSTALLATION OF DISTRIBUTION WATERMAINS BOROUGH OF QUEENS

JB 636 R **REPAIR TO UTILITY STRUCTURES** **CY**

At the following locations:

N/S Int. of Merrick Blvd. and Ursina Rd.

SPECIALTY ITEM

Total Quantity for JB 636 R = 10

JB 638 N **INSTALLATION OF FIELD CONSTRUCTED UTILITIES STRUCTURES.** **CY**

At the following locations:

F/O #123-30 Merrick Blvd.
F/O #123-30 Merrick Blvd.
S/S Merrick Blvd. Bet. Baisley Blvd. to Sunbury Rd.

SPECIALTY ITEM

Total Quantity for JB 638 N = 34

JB 638 R **BREAK OUT AND REMOVE UTILITY STRUCTURE** **CY**

At the following locations:

F/O #122-20 Merrick Blvd.
F/O #123-30 Merrick Blvd.
F/O #123-27 Merrick Blvd.
S/S Merrick Blvd. Bet. Baisley Blvd. to Sunbury Rd.

SPECIALTY ITEM

Total Quantity for JB 638 R = 60

JB 710.1 **REMOVAL OF ABANDONED UTILITY STEEL/CAST IRON/ PLASTIC PIPES, UP TO AND INCLUDING 12" DIAMETER PIPE** **LF**

At the following locations:

F/O #123-30 Merrick Blvd.

SPECIALTY ITEM

Total Quantity for JB 710.1 = 60

CON EDISON JOINT BIDDING SCOPE OF WORK
SUPPORT AND PROTECTION
QED1063AC
INSTALLATION OF DISTRIBUTION WATERMAINS
BOROUGH OF QUEENS

JB 803.2	**LINE CUT BY PNEUMATIC TOOLS IN LIEU OF SAW CUT ASSOCIATED WITH ROADWAY REMOVAL OPERATIONS (LINE CUT ANY COMBINATION OF ASPHALT AND CONCRETE ROADWAY)**	**LF**

t the following locations:

S/S Int. of Merrick Blvd. and 125th Ave.
Int. of Onderdonk Ave. and Madison St.
Int. of Onderdonk Ave. and Madison St.
Int. of Merrick Rd. and Sunbury Rd.

Total Quantity for JB 803.2 = 120

JB 9.28	**Utility Expanded Work Allowance**	**FS**

Various Locations as Required

Total Quantity for JB 9.28 = **1**

CON EDISON CONTRACT INCLUSION ANALYSIS
CITY BID ITEMS ESTIMATED QUANTITIES
QED1063AC
INSTALLATION OF DISTRIBUTION WATERMAINS
BOROUGH OF QUEENS

CITY BID ITEM NUMBER	DESCRIPTION	UNIT	TOTAL QUANTITY
60.11R606	FURNISHING AND DELIVERING 6" DUCTILE IRON RESTRAINED JOINT PIPE (CLASS 56)	LF	39
60.11R608	FURNISHING AND DELIVERING 8" DUCTILE IRON RESTRAINED JOINT PIPE (CLASS 56)	LF	72
60.12D06	LAYING 6" DUCTILE IRON PIPE AND FITTINGS	LF	78
60.12D08	LAYING 8" DUCTILE IRON PIPE AND FITTINGS	LF	40
60.13M0A24	FURNISHING & DELIVERING DUCTILE IRON MECHANICAL JOINT FITTINGS 24 INCH DIA. AND SMALLER, INCL. WEDGE TYPE RETAINER GLANDS	TONS	29
65.11BR	FURNISHING, DELIVERING AND INSTALLING BANDS, RODS, WASHERS, ETC., COMPLETE, FOR RESTRAINING JOINTS	LBS	70
65.21PS	FURNISHING AND PLACING POLYETHYLENE SLEEVE	LF	118
65.31FF	FURNISHING, DELIVERING AND PLACING FILTER FABRIC	SF	1,658
65.71SG	FURNISHING, DELIVERING AND PLACING SCREENED GRAVEL OR BROKEN STONE BEDDING	CY	90
70.81CB	CLEAN BACKFILL	CY	194
70.91SW12	FURNISHING AND PLACING SHEETING AND BRACING FOR WATER MAIN PIPE 12" IN DIAMETER OR LESS	SF	1,892

CON EDISON JOINT BIDDING SCOPE OF WORK
CITY BID ITEMS FOR INCLUSION IN
QED1063AC
INSTALLATION OF DISTRIBUTION WATERMAINS
BOROUGH OF QUEENS

60.11R606 **FURNISHING AND DELIVERING 6" DUCTILE IRON RESTRAINED JOINT PIPE (CLASS 56)** **LF**

At the following locations:

N/S Merrick Blvd., 40' E/E/C Baisley Blvd.
F/O #123-40 125th Ave.
S/S Merrick Blvd. 135' E/E/C 125th Ave.
F/O #131-35 Avery Ave.
W/S College Pt. Blvd., 60' S/S/C Maple Ave.
F/O #4441, College Pt. Blvd.
F/O #13101 Sanford Ave.
F/O #13129 Sanford Ave.
N/S Sanford Ave., 100' W/W/C College Pt. Blvd.
W/S College Pt. Blvd., 50' S/S/C Sanford Ave.
F/O #13110 Maple Ave. (A)
F/O #13110 Maple Ave. (B)
S/S Merrick Blvd. 135' E/E/C 125th Ave.

Total Quantity for 60.11R606 = 39

60.11R608 **FURNISHING AND DELIVERING 8" DUCTILE IRON RESTRAINED JOINT PIPE (CLASS 56)** **LF**

At the following locations:

Int. of Onderdonk Ave. and Madison St.
F/O #122-29 Merrick Blvd.
S/ Int. of Merrick Blvd. and 125th Ave.
S/S Int. of Merrick Blvd. and Sunbury Rd.

Total Quantity for 60.11R608 = 72

CON EDISON JOINT BIDDING SCOPE OF WORK
CITY BID ITEMS FOR INCLUSION IN
QED1063AC
INSTALLATION OF DISTRIBUTION WATERMAINS
BOROUGH OF QUEENS

60.12D06 **LAYING 6" DUCTILE IRON PIPE AND FITTINGS** **LF**

At the following locations:

N/S Merrick Blvd., 40' E/E/C Baisley Blvd.
F/O #123-40 125th Ave.
S/S Merrick Blvd. 135' E/E/C 125th Ave.
F/O #131-35 Avery Ave.
W/S College Pt. Blvd., 60' S/S/C Maple Ave.
F/O #4441, College Pt. Blvd.
F/O #13101 Sanford Ave.
F/O #13129 Sanford Ave.
N/S Sanford Ave., 100' W/W/C College Pt. Blvd.
W/S College Pt. Blvd., 50' S/S/C Sanford Ave.
F/O #13110 Maple Ave. (A)
F/O #13110 Maple Ave. (B)
S/S Merrick Blvd. 135' E/E/C 125th Ave.

Total Quantity for 60.12D06 = 78

60.12D08 **LAYING 8" DUCTILE IRON PIPE AND FITTINGS** **LF**

At the following locations:

Int. of Onderdonk Ave. and Madison St.
F/O #122-29 Merrick Blvd.
S/ Int. of Merrick Blvd. and 125th Ave.
S/S Int. of Merrick Blvd. and Sunbury Rd.

Total Quantity for 60.12D08 = 40

CON EDISON JOINT BIDDING SCOPE OF WORK
CITY BID ITEMS FOR INCLUSION IN
QED1063AC
INSTALLATION OF DISTRIBUTION WATERMAINS
BOROUGH OF QUEENS

60.13M0A24	**FURNISHING & DELIVERING DUCTILE IRON MECHANICAL JOINT FITTINGS 24 INCH DIA. AND SMALLER, INCL. WEDGE TYPE RETAINER GLANDS**	**TONS**

At the following locations:

Int. of Onderdonk Ave. and Madison St.
N/S Merrick Blvd., 40' E/E/C Baisley Blvd.
F/O #122-29 Merrick Blvd.
F/O #123-40 125th Ave.
S/ Int. of Merrick Blvd. and 125th Ave.
S/S Merrick Blvd. 135' E/E/C 125th Ave.
F/O #131-35 Avery Ave.
W/S College Pt. Blvd., 60' S/S/C Maple Ave.
F/O #4441, College Pt. Blvd.
F/O #13101 Sanford Ave.
F/O #13129 Sanford Ave.
N/S Sanford Ave., 100' W/W/C College Pt. Blvd.
W/S College Pt. Blvd., 50' S/S/C Sanford Ave.
F/O #13110 Maple Ave. (A)
F/O #13110 Maple Ave. (B)
S/S Int. of Merrick Blvd. and Sunbury Rd.
S/S Merrick Blvd. 135' E/E/C 125th Ave.

Total Quantity for 60.13M0A24 = 29

CON EDISON JOINT BIDDING SCOPE OF WORK
CITY BID ITEMS FOR INCLUSION IN
QED1063AC
INSTALLATION OF DISTRIBUTION WATERMAINS
BOROUGH OF QUEENS

65.11BR **FURNISHING, DELIVERING AND INSTALLING BANDS, RODS, WASHERS, ETC., COMPLETE, FOR RESTRAINING JOINTS** **LBS**

At the following locations:

N/S Merrick Blvd., 40' E/E/C Baisley Blvd.
F/O #123-40 125th Ave.
S/S Merrick Blvd. 135' E/E/C 125th Ave.
F/O #131-35 Avery Ave.
W/S College Pt. Blvd., 60' S/S/C Maple Ave.
F/O #4441, College Pt. Blvd.
F/O #13101 Sanford Ave.
F/O #13101 Sanford Ave.
F/O #13129 Sanford Ave.
N/S Sanford Ave., 100' W/W/C College Pt. Blvd.
W/S College Pt. Blvd., 50' S/S/C Sanford Ave.
F/O #13110 Maple Ave. (A)
F/O #13110 Maple Ave. (B)
S/S Merrick Blvd. 135' E/E/C 125th Ave.

Total Quantity for 65.11BR = 70

CON EDISON JOINT BIDDING SCOPE OF WORK
CITY BID ITEMS FOR INCLUSION IN
QED1063AC
INSTALLATION OF DISTRIBUTION WATERMAINS
BOROUGH OF QUEENS

65.21PS **FURNISHING AND PLACING POLYETHYLENE SLEEVE** **LF**

At the following locations:

Int. of Onderdonk Ave. and Madison St.
N/S Merrick Blvd., 40' E/E/C Baisley Blvd.
F/O #122-29 Merrick Blvd.
F/O #123-40 125th Ave.
S/ Int. of Merrick Blvd. and 125th Ave.
S/S Merrick Blvd. 135' E/E/C 125th Ave.
F/O #131-35 Avery Ave.
W/S College Pt. Blvd., 60' S/S/C Maple Ave.
F/O #4441, College Pt. Blvd.
F/O #13101 Sanford Ave.
F/O #13129 Sanford Ave.
N/S Sanford Ave., 100' W/W/C College Pt. Blvd.
W/S College Pt. Blvd., 50' S/S/C Sanford Ave.
F/O #13110 Maple Ave. (A)
F/O #13110 Maple Ave. (B)
S/S Int. of Merrick Blvd. and Sunbury Rd.
S/S Merrick Blvd. 135' E/E/C 125th Ave.

Total Quantity for 65.21PS = 118

CON EDISON JOINT BIDDING SCOPE OF WORK
CITY BID ITEMS FOR INCLUSION IN
QED1063AC
INSTALLATION OF DISTRIBUTION WATERMAINS
BOROUGH OF QUEENS

65.31FF **FURNISHING, DELIVERING AND PLACING FILTER FABRIC** **SF**

At the following locations:

Int. of Onderdonk Ave. and Madison St.
N/S Merrick Blvd., 40' E/E/C Baisley Blvd.
F/O #122-29 Merrick Blvd.
F/O #123-40 125th Ave.
S/ Int. of Merrick Blvd. and 125th Ave.
S/S Merrick Blvd. 135' E/E/C 125th Ave.
F/O #131-35 Avery Ave.
W/S College Pt. Blvd., 60' S/S/C Maple Ave.
F/O #4441, College Pt. Blvd.
F/O #13101 Sanford Ave.
F/O #13129 Sanford Ave.
N/S Sanford Ave., 100' W/W/C College Pt. Blvd.
W/S College Pt. Blvd., 50' S/S/C Sanford Ave.
F/O #13110 Maple Ave. (A)
F/O #13110 Maple Ave. (B)
S/S Int. of Merrick Blvd. and Sunbury Rd.
S/S Merrick Blvd. 135' E/E/C 125th Ave.

Total Quantity for 65.31FF = 1,658

CON EDISON JOINT BIDDING SCOPE OF WORK
CITY BID ITEMS FOR INCLUSION IN
QED1063AC
INSTALLATION OF DISTRIBUTION WATERMAINS
BOROUGH OF QUEENS

65.71SG **FURNISHING, DELIVERING AND PLACING SCREENED GRAVEL OR BROKEN STONE BEDDING** **CY**

At the following locations:

Int. of Onderdonk Ave. and Madison St.
N/S Merrick Blvd., 40' E/E/C Baisley Blvd.
F/O #122-29 Merrick Blvd.
F/O #123-40 125th Ave.
S/ Int. of Merrick Blvd. and 125th Ave.
S/S Merrick Blvd. 135' E/E/C 125th Ave.
F/O #131-35 Avery Ave.
W/S College Pt. Blvd., 60' S/S/C Maple Ave.
F/O #4441, College Pt. Blvd.
F/O #13101 Sanford Ave.
F/O #13129 Sanford Ave.
N/S Sanford Ave., 100' W/W/C College Pt. Blvd.
W/S College Pt. Blvd., 50' S/S/C Sanford Ave.
F/O #13110 Maple Ave. (A)
F/O #13110 Maple Ave. (B)
S/S Int. of Merrick Blvd. and Sunbury Rd.
S/S Merrick Blvd. 135' E/E/C 125th Ave.

Total Quantity for 65.71SG = 90

CON EDISON JOINT BIDDING SCOPE OF WORK
CITY BID ITEMS FOR INCLUSION IN
QED1063AC
INSTALLATION OF DISTRIBUTION WATERMAINS
BOROUGH OF QUEENS

70.81CB **CLEAN BACKFILL** **CY**

At the following locations:

Int. of Onderdonk Ave. and Madison St.
N/S Merrick Blvd., 40' E/E/C Baisley Blvd.
F/O #122-29 Merrick Blvd.
F/O #123-40 125th Ave.
S/ Int. of Merrick Blvd. and 125th Ave.
S/S Merrick Blvd. 135' E/E/C 125th Ave.
F/O #131-35 Avery Ave.
W/S College Pt. Blvd., 60' S/S/C Maple Ave.
F/O #4441, College Pt. Blvd.
F/O #13101 Sanford Ave.
F/O #13129 Sanford Ave.
N/S Sanford Ave., 100' W/W/C College Pt. Blvd.
W/S College Pt. Blvd., 50' S/S/C Sanford Ave.
F/O #13110 Maple Ave. (A)
F/O #13110 Maple Ave. (B)
S/S Int. of Merrick Blvd. and Sunbury Rd.
S/S Merrick Blvd. 135' E/E/C 125th Ave.

Total Quantity for 70.81CB = 194

CON EDISON JOINT BIDDING SCOPE OF WORK
CITY BID ITEMS FOR INCLUSION IN
QED1063AC
INSTALLATION OF DISTRIBUTION WATERMAINS
BOROUGH OF QUEENS

70.91SW12	**FURNISHING AND PLACING SHEETING AND BRACING FOR WATER MAIN PIPE 12" IN DIAMETER OR LESS**	**SF**

At the following locations:

Int. of Onderdonk Ave. and Madison St.
N/S Merrick Blvd., 40' E/E/C Baisley Blvd.
F/O #122-29 Merrick Blvd.
F/O #123-40 125th Ave.
S/ Int. of Merrick Blvd. and 125th Ave.
S/S Merrick Blvd. 135' E/E/C 125th Ave.
F/O #131-35 Avery Ave.
W/S College Pt. Blvd., 60' S/S/C Maple Ave.
F/O #4441, College Pt. Blvd.
F/O #13101 Sanford Ave.
F/O #13129 Sanford Ave.
N/S Sanford Ave., 100' W/W/C College Pt. Blvd.
W/S College Pt. Blvd., 50' S/S/C Sanford Ave.
F/O #13110 Maple Ave. (A)
F/O #13110 Maple Ave. (B)
S/S Int. of Merrick Blvd. and Sunbury Rd.
S/S Merrick Blvd. 135' E/E/C 125th Ave.

Total Quantity for 70.91SW12 = 1,892

JOINT BID WORKSHEET

QED1063AC - INSTALLATION OF DISTRIBUTION WATER MAINS

BOROUGH OF THE BRONX

ENGINEER'S ESTIMATE OF QUANTITY AND TYPES OF INTERFERENCE

FOR EMPIRE CITY SUBWAY

JOINT BID ITEM NUMBER	DESCRIPTION	Unit of Measure	Estimated Quantity
JB 108.1	UTILITIES CROSSING TRENCH FOR WATERMAIN UP TO AND INCL. 12" DIAMETER (TYPE .1)	EA.	12
JB 108.2	UTILITIES CROSSING TRENCH FOR WATERMAIN UP TO AND INCL. 12" DIAMETER (TYPE .2)	EA.	1
JB 108.3	UTILITIES CROSSING TRENCH FOR WATERMAIN UP TO AND INCL. 12" DIAMETER (TYPE .3)	EA.	1
JB 109.1	UTILITIES CROSSING TRENCH FOR WATERMAIN OVER 12" AND UP TO 24" DIAMETER (TYPE .1)	EA.	1
JB 300.1	SPECIAL CARE EXCAVATION AND BACKFILLING IN TRENCH LESS THAN 5' DEEP	C.Y.	25
JB 300.2	SPECIAL CARE EXCAVATION AND BACKFILLING IN TRENCH GREATER THAN 5' DEEP	C.Y.	25
JB 330T1	SUPPORT AND PROTECTION OF COMMUNICATION UTILITY FACILITIES DURING EXCAVATION OF CITY TRENCH WHEN PARALLELING COMMUNICATION FACILITIES LIE COMPLETELY IN THE PROPOSED CITY TRENCH	L.F.	45
JB 330T2.1	COMMUNICATIONS FACILITY OPERATOR(S) REQUESTS THE TRENCH BE WIDENED	L.F.	25
JB 330T2.2	COMMUNICATION FACILITY OPERATOR(S) REQUESTS THE TRENCH / SHEETING BE MODIFIED	L.F.	25
JB 350	OVERHEAD ACCOMMODATION PROTECTION OF OVERHEAD FACILITIES, POLES, AND APPURTENANCES	L.S.	1
JB 351	INSTALL AND REMOVE "A" FRAME ON UTILITY POLES	EACH	2
JB 400	TEST PITS FOR UTILITY FACILITIES	C.Y.	15
JB 401	TRENCH EXCAVATION FOR ADJUSTMENT OF UTILITY FACILITIES	C.Y.	126
JB 402T.1A	EXISTING CONCRETE ENCASED TELECOMMUNICATION CONDUITS PLACED IN FINAL POSITION WITH CONCRETE ENCASEMENT	L.F.	590
JB 402T.2A	EXISTING NON-CONCRETE ENCASED TELECOMMUNICATION CONDUITS PLACED IN FINAL POSITION WITH CONCRETE ENCASEMENT	L.F.	20
JB 402T.3	ACM REMOVAL AND DISPOSAL OF VERIZON/ECS CONDUITS WITH ASBESTOS CONTAINING MATERIAL TRANSITE PIPES (ACM-TP) UP TO AND INCLUDING 4" DIAMETER	L.F.	25
JB 402T.V1A	EXISTING VACANT CONCRETE ENCASED TELECOMMUNICATION CONDUITS PLACED IN FINAL POSITION WITH CONCRETE ENCASEMENT	L.F.	118
JB 402T.V2A	EXISTING VACANT NON-CONCRETE ENCASED TELECOMMUNICATION CONDUITS PLACED IN FINAL POSITION WITH CONCRETE ENCASEMENT	L.F.	30
JB 403T.2	FURNISH AND INSTALL STEEL PROTECTION PLATES FOR UTILITES FACILITES (3/8" THICK)	S.F.	25
JB 406	EXCAVATION FOR UTILITY STRUCTURE	C.Y.	25

JOINT BID WORKSHEET

QED1063AC - INSTALLATION OF DISTRIBUTION WATER MAINS

BOROUGH OF THE BRONX

ENGINEER'S ESTIMATE OF QUANTITY AND TYPES OF INTERFERENCE

FOR EMPIRE CITY SUBWAY

JOINT BID ITEM NUMBER	DESCRIPTION	Unit of Measure	Estimated Quantity
JB 450.3	CONSTRUCTION FIELD SUPPORT - MEDIUM SIZE CREW (TYPE .3)	CREW/HR	20
JB 500	REMOVAL OF ABANDONED UTILITY CONDUITS (NON-CONCRETE ENCASED)	L.F.	40
JB 700	SPECIAL MODIFICATION OF WORK METHODS TO ACCOMMODATE/PROTECT UNDERGROUND FACILITIES WITH LIMITED COVER	C.Y.	25
JB 802A	SPECIAL CARE EXCAVATION AND RESTORATION FOR SIDEWALK WORK	S.F.	25
JB 802B	SPECIAL CARE EXCAVATION AND RESOTRATION FOR CURB WORK	L.F.	5
JB 803.2	LINE CUT BY PNEUMATIC TOOLS IN LIEU OF SAW CUT ASSOCIATED WITH ROADWAY REMOVAL OPERATIONS (LINE CUT ANY COMBINATION OF ASPHALT AND CONCRETE ROADWAY)	L.F.	25
JB 9.28	**Utility Expanded Work Allowance**	**FS**	**1**

EMPIRE CITY SUBWAY JOINT BIDDING SCOPE OF WORK
SUPPORT & PROTECTION
QED1063AC - INSTALLATION OF DISTRIBUTION WATER MAINS
BOROUGH OF THE BRONX

JB 108.1	**UTILITIES CROSSING TRENCH FOR WATERMAIN UP TO AND INCL. 12" DIAMETER (TYPE .1)**	**EA.**
	At the following locations:	
	W/S OF BAINBRIDGE AVENUE, S/O EAST 193RD STREET	1
	INTERSECTION OF BAINBRIDGE AVENUE AND EAST 193RD STREET	1
	W/S OF BAINBRIDGE AVENUE, N/O EAST 193RD STREET	2
	N/S OF EAST 193RD STREET, E/O BAINBRIDGE AVENUE	1
	INTERSECTION OF EAST 193RD STREET AND MARION AVENUE	2
	INTERSECTION OF BUSSING AVENUE AND GRACE AVENUE	1
	N/S OF BUSSING AVENUE, E/O GRACE AVENUE	1
	INTERSECTION OF BUSSING AVENUE AND EDISON AVENUE	1
	N/S OF BUSSING AVENUE, E/O EDISON AVENUE	1
	AS ENCOUNTERED OR DIRECTED BY ECS FIELD REPRESENTATIVE	1
	Total quantity for JB 108.1 = 12	
JB 108.2	**UTILITIES CROSSING TRENCH FOR WATERMAIN UP TO AND INCL. 12" DIAMETER (TYPE .2)**	**EA.**
	At the following locations:	
	AS ENCOUNTERED OR DIRECTED BY ECS FIELD REPRESENTATIVE	1
	Total quantity for JB 108.2 = 1	
JB 108.3	**UTILITIES CROSSING TRENCH FOR WATERMAIN UP TO AND INCL. 12" DIAMETER (TYPE .3)**	**EA.**
	At the following locations:	
	AS ENCOUNTERED OR DIRECTED BY ECS FIELD REPRESENTATIVE	1
	Total quantity for JB 108.3 = 1	
JB 109.1	**UTILITIES CROSSING TRENCH FOR WATERMAIN OVER 12" AND UP TO 24" DIAMETER (TYPE .1)**	**EA.**
	At the following locations:	
	AS ENCOUNTERED OR DIRECTED BY ECS FIELD REPRESENTATIVE	1
	Total quantity for JB 109.1 = 1	
JB 300.1	**SPECIAL CARE EXCAVATION AND BACKFILLING IN TRENCH LESS THAN 5' DEEP**	**C.Y.**
	At the following locations:	
	AS ENCOUNTERED OR DIRECTED BY ECS FIELD REPRESENTATIVE	25
	Total quantity for JB 300.1 = 25	
JB 300.2	**SPECIAL CARE EXCAVATION AND BACKFILLING IN TRENCH GREATER THAN 5' DEEP**	**C.Y.**
	At the following locations:	
	AS ENCOUNTERED OR DIRECTED BY ECS FIELD REPRESENTATIVE	25
	Total quantity for JB 300.2 = 25	

EMPIRE CITY SUBWAY JOINT BIDDING SCOPE OF WORK

SUPPORT & PROTECTION

QED1063AC - INSTALLATION OF DISTRIBUTION WATER MAINS

BOROUGH OF THE BRONX

JB 330T1	**SUPPORT AND PROTECTION OF COMMUNICATION UTILITY FACILITIES DURING EXCAVATION OF CITY TRENCH WHEN PARALLELING COMMUNICATION FACILITIES LIE COMPLETELY IN THE**	**L.F.**
	At the following locations:	
	N/S OF EAST FORDHAM ROAD, E/O BAINBRIDGE AVENUE	10
	AS ENCOUNTERED OR DIRECTED BY ECS FIELD REPRESENTATIVE	35
	Total quantity for JB 330T1 = 45	
JB 330T2.1	**COMMUNICATIONS FACILITY OPERATOR(S) REQUESTS THE TRENCH BE WIDENED**	**L.F.**
	At the following locations:	
	AS ENCOUNTERED OR DIRECTED BY ECS FIELD REPRESENTATIVE	25
	Total quantity for JB 330T2.1 = 25	
JB 330T2.2	**COMMUNICATION FACILITY OPERATOR(S) REQUESTS THE TRENCH / SHEETING BE MODIFIED**	**L.F.**
	At the following locations:	
	AS ENCOUNTERED OR DIRECTED BY ECS FIELD REPRESENTATIVE	25
	Total quantity for JB 330T2.2 = 25	
JB 350	**OVERHEAD ACCOMMODATION PROTECTION OF OVERHEAD FACILITIES, POLES, AND APPURTENANCES**	**L.S.**
	At the following locations:	
	AS ENCOUNTERED OR DIRECTED BY ECS FIELD REPRESENTATIVE	1
	Total quantity for JB 350 = 1	
JB 351	**INSTALL AND REMOVE "A" FRAME ON UTILITY POLES**	**EACH**
	At the following locations:	
	AS ENCOUNTERED OR DIRECTED BY ECS FIELD REPRESENTATIVE	2
	Total quantity for JB 351 = 2	
JB 400	**TEST PITS FOR UTILITY FACILITIES**	**C.Y.**
	At the following locations:	
	AS ENCOUNTERED OR DIRECTED BY ECS FIELD REPRESENTATIVE	15
	Total quantity for JB 400 = 15	
JB 401	**TRENCH EXCAVATION FOR ADJUSTMENT OF UTILITY FACILITIES**	
	At the following locations:	
	INTERSECTION OF BUSSING AVENUE AND GRACE AVENUE N/S OF BUSSING AVENUE, E/O GRACE AVENUE INTERSECTION OF BUSSING AVENUE AND EDSON AVENUE N/S OF BUSSING AVENUE, E/O EDSON AVENUE AS ENCOUNTERED OR DIRECTED BY ECS FIELD REPRESENTATIVE	
	Total quantity for JB 401 = 126	

JB 402T.1A	**EXISTING CONCRETE ENCASED TELECOMMUNICATION CONDUITS PLACED IN FINAL POSITION WITH CONCRETE ENCASEMENT**	**L.F.**
	At the following locations:	
	INTERSECTION OF BUSSING AVENUE AND GRACE AVENUE	150
	N/S OF BUSSING AVENUE, E/O GRACE AVENUE	165
	INTERSECTION OF BUSSING AVENUE AND EDSON AVENUE	150
	N/S OF BUSSING AVENUE, E/O EDSON AVENUE	100
	AS ENCOUNTERED OR DIRECTED BY ECS FIELD REPRESENTATIVE	25
	Total quantity for JB 402T.1A = 590	
JB 402T.2A	**EXISTING NON-CONCRETE ENCASED TELECOMMUNICATION CONDUITS PLACED IN FINAL POSITION WITH CONCRETE ENCASEMENT**	**L.F.**
	At the following locations:	
	AS ENCOUNTERED OR DIRECTED BY ECS FIELD REPRESENTATIVE	20
	Total quantity for JB 402T.2A = 20	
JB 402T.3	**ACM REMOVAL AND DISPOSAL OF VERIZON/ECS CONDUITS WITH ASBESTOS CONTAINING MATERIAL TRANSITE PIPES (ACM-TP) UP TO AND INCLUDING 4" DIAMETER**	**L.F.**
	At the following locations:	
	AS ENCOUNTERED OR DIRECTED BY ECS FIELD REPRESENTATIVE	25
	Total quantity for JB 402T.3 = 25	
JB 402T.V1A	**EXISTING VACANT CONCRETE ENCASED TELECOMMUNICATION CONDUITS PLACED IN FINAL POSITION WITH CONCRETE ENCASEMENT**	**L.F.**
	At the following locations:	
	INTERSECTION OF BUSSING AVENUE AND GRACE AVENUE	30
	N/S OF BUSSING AVENUE, E/O GRACE AVENUE	33
	INTERSECTION OF BUSSING AVENUE AND EDSON AVENUE	30
	N/S OF BUSSING AVENUE, E/O EDSON AVENUE	20
	AS ENCOUNTERED OR DIRECTED BY ECS FIELD REPRESENTATIVE	5
	Total quantity for JB 402T.V1A = 118	
JB 402T.V2A	**EXISTING VACANT NON-CONCRETE ENCASED TELECOMMUNICATION CONDUITS PLACED IN FINAL POSITION WITH CONCRETE ENCASEMENT**	**L.F.**
	At the following locations:	
	AS ENCOUNTERED OR DIRECTED BY ECS FIELD REPRESENTATIVE	30
	Total quantity for JB 402T.V2A = 30	

EMPIRE CITY SUBWAY JOINT BIDDING SCOPE OF WORK
SUPPORT & PROTECTION
QED1063AC - INSTALLATION OF DISTRIBUTION WATER MAINS
BOROUGH OF THE BRONX

JB 403T.2	**FURNISH AND INSTALL STEEL PROTECTION PLATES FOR UTILITES FACILITES (3/8" THICK)**	**S.F.**
	At the following locations:	
	AS ENCOUNTERED OR DIRECTED BY ECS FIELD REPRESENTATIVE	25
	Total quantity for JB 403T.2 = 25	
JB 406	**EXCAVATION FOR UTILITY STRUCTURE**	**C.Y.**
	At the following locations:	
	INTERSECTION OF MERRICK BOULEVARD AND SUNBURY ROAD	20
	AS ENCOUNTERED OR DIRECTED BY ECS FIELD REPRESENTATIVE	5
	Total quantity for JB 406 = 25	
JB 450.3	**CONSTRUCTION FIELD SUPPORT - MEDIUM SIZE CREW (TYPE .3)**	**CREW/HR**
	At the following locations:	
	AS ENCOUNTERED OR DIRECTED BY ECS FIELD REPRESENTATIVE	20
	Total quantity for JB 450.3 = 20	
JB 500	**REMOVAL OF ABANDONED UTILITY CONDUITS (NON-CONCRETE ENCASED)**	**L.F.**
	At the following locations:	
	INTERSECTION OF BUSSING AVENUE AND EDSON AVENUE	10
	N/S OF BUSSING AVENUE, E/O EDSON AVENUE	10
	AS ENCOUNTERED OR DIRECTED BY ECS FIELD REPRESENTATIVE	20
	Total quantity for JB 500 = 40	
JB 700	**SPECIAL MODIFICATION OF WORK METHODS TO ACCOMMODATE/PROTECT UNDERGROUND FACILITIES WITH LIMITED COVER**	**C.Y.**
	At the following locations:	
	AS ENCOUNTERED OR DIRECTED BY ECS FIELD REPRESENTATIVE	25
	Total quantity for JB 700 = 25	

EMPIRE CITY SUBWAY JOINT BIDDING SCOPE OF WORK
SUPPORT & PROTECTION
QED1063AC - INSTALLATION OF DISTRIBUTION WATER MAINS
BOROUGH OF THE BRONX

JB 802A **SPECIAL CARE EXCAVATION AND RESTORATION FOR SIDEWALK WORK**

At the following locations:

AS ENCOUNTERED OR DIRECTED BY ECS FIELD REPRESENTATIVE 25

Total quantity for JB 802A = 25

JB 802B **SPECIAL CARE EXCAVATION AND RESOTRATION FOR CURB WORK** L.F.

At the following locations:

AS ENCOUNTERED OR DIRECTED BY ECS FIELD REPRESENTATIVE 5

Total quantity for JB 802B = 5

JB-803.2 **LINE CUT BY PNEUMATIC TOOLS IN LIEU OF SAW CUT ASSOCIATED WITH ROADWAY REMOVAL** L.F.

At the following locations:

AS ENCOUNTERED OR DIRECTED BY ECS FIELD REPRESENTATIVE 25

Total quantity for JB 803.2 = 25

JB 9.28 Utility Expanded Work Allowance FS

Various Locations as Required 1

Total Quantity for JB 9.28 = 1

□ □S□ □□□W□ □ □W□□□K□ □U□

UTILITY CONTRACT INCLUSION ANALYSIS
BID ITEM ACCOMMODATION
QED1063AC - INSTALLATION OF DISTRIBUTION WATER MAINS
BOROUGH OF THE BRONX
ENGINEER'S ESTIMATE OF QUANTITY AND TYPES OF INTERFERENCE

FOR EMPIRE CITY SUBWAY

BID ITEM NUMBER	DESCRIPTION	Unit of Measure	Estimated Quantity
4.02 CB	ASPHALTIC CONCRETE MIXTURE	TONS.	9
4.02 AG	ASPHALTIC CONCRETE WEARING COURSE, 3" THICK	S.Y.	54
4.04 H	CONCRETE BASE FOR PAVEMENT, VARIABLE THICKNESS, FOR TRENCH RESTORATION (HIGH EARLY STRENGTH)	C.Y.	13
6.55	SAWCUTTING EXISTING PAVEMENT	L.F.	216
60.11R612	FURNISHING AND DELIVERING 12" DUCTILE IRON RESTRAINED JOINT PIPE (CLASS 56)	L.F.	20
60.12D12	LAYING 12" DUCTILE IRON PIPE AND FITTINGS	L.F.	20
60.13M0A24	FURNISHING AND DELIVERING DUCTILE IRON MECHANICAL JOINT FITTINGS 24 INCH DIAMETER AND SMALLER, INCLUDING WEDGE TYPE RETAINER GLANDS	TONS	1

UTILITY INCLUSION SCOPE OF WORK

BID ITEM ACCOMMODATION

QED1063AC - INSTALLATION OF DISTRIBUTION WATER MAINS

BOROUGH OF THE BRONX

4.02 CB	**ASPHALTIC CONCRETE MIXTURE**	**TONS.**
	At the following locations:	
	INTERSECTION OF BUSSING AVENUE AND GRACE AVENUE	3
	N/S OF BUSSING AVENUE, E/O GRACE AVENUE	2
	INTERSECTION OF BUSSING AVENUE AND EDSON AVENUE	3
	N/S OF BUSSING AVENUE, E/O EDSON AVENUE	1
	Total quantity for 4.02 CB = 9	
4.02 AG	**ASPHALTIC CONCRETE WEARING COURSE, 3" THICK**	**S.Y.**
	At the following locations:	
	INTERSECTION OF BUSSING AVENUE AND GRACE AVENUE	17
	N/S OF BUSSING AVENUE, E/O GRACE AVENUE	15
	INTERSECTION OF BUSSING AVENUE AND EDSON AVENUE	17
	N/S OF BUSSING AVENUE, E/O EDSON AVENUE	5
	Total quantity for 4.02 AG = 54	
4.04 H	**CONCRETE BASE FOR PAVEMENT, VARIABLE THICKNESS, FOR TRENCH RESTORATION (HIGH EARLY STRENGTH)**	**C.Y.**
	At the following locations:	
	INTERSECTION OF BUSSING AVENUE AND GRACE AVENUE	4
	N/S OF BUSSING AVENUE, E/O GRACE AVENUE	4
	INTERSECTION OF BUSSING AVENUE AND EDSON AVENUE	4
	N/S OF BUSSING AVENUE, E/O EDSON AVENUE	1
	Total quantity for 4.04 H = 13	
6.55	**SAWCUTTING EXISTING PAVEMENT**	**L.F.**
	At the following locations:	
	INTERSECTION OF BUSSING AVENUE AND GRACE AVENUE	60
	N/S OF BUSSING AVENUE, E/O GRACE AVENUE	66
	INTERSECTION OF BUSSING AVENUE AND EDSON AVENUE	60
	N/S OF BUSSING AVENUE, E/O EDSON AVENUE	30
	Total quantity for 6.55 = 216	
60.11R612	**FURNISHING AND DELIVERING 12" DUCTILE IRON RESTRAINED JOINT PIPE (CLASS 56)**	**L.F.**
	At the following locations:	
	N/S OF BUSSING AVENUE, E/O EDSON AVENUE	20
	Total quantity for 60.11R612 = 20	
60.12D12	**LAYING 12" DUCTILE IRON PIPE AND FITTINGS**	**L.F.**
	At the following locations:	
	N/S OF BUSSING AVENUE, E/O EDSON AVENUE	20
	Total quantity for 60.12D12 20	

UTILITY INCLUSION SCOPE OF WORK

BID ITEM ACCOMMODATION

QED1063AC - INSTALLATION OF DISTRIBUTION WATER MAINS

BOROUGH OF THE BRONX

60.13M0A24	**FURNISHING AND DELIVERING DUCTILE IRON MECHANICAL JOINT FITTINGS 24 INCH DIAMETER AND SMALLER, INCLUDING WEDGE TYPE RETAINER GLANDS**	**TONS**
	At the following locations:	
	N/S OF BUSSING AVENUE, E/O EDSON AVENUE	1
	Total quantity for 60.13M0A24 = 1	

JOINT BID WORKSHEET

QED1063AC - INSTALLATION OF DISTRIBUTION WATER MAINS

BOROUGH OF QUEENS

ENGINEER'S ESTIMATE OF QUANTITY AND TYPES OF INTERFERENCE

FOR VERIZON

JOINT BID ITEM NUMBER	DESCRIPTION	Unit of Measure	Estimated Quantity
JB 108.1	UTILITIES CROSSING TRENCH FOR WATERMAIN UP TO AND INCL. 12" DIAMETER (TYPE .1)	EA.	39
JB 108.2	UTILITIES CROSSING TRENCH FOR WATERMAIN UP TO AND INCL. 12" DIAMETER (TYPE .2)	EA.	2
JB 108.3	UTILITIES CROSSING TRENCH FOR WATERMAIN UP TO AND INCL. 12" DIAMETER (TYPE .3)	EA.	3
JB 109.1	UTILITIES CROSSING TRENCH FOR WATERMAIN OVER 12" AND UP TO 24" DIAMETER (TYPE .1)	EA.	2
JB 300.1	SPECIAL CARE EXCAVATION AND BACKFILLING IN TRENCH LESS THAN 5' DEEP	C.Y.	35
JB 300.2	SPECIAL CARE EXCAVATION AND BACKFILLING IN TRENCH GREATER THAN 5' DEEP	C.Y.	25
JB 330T1	SUPPORT AND PROTECTION OF COMMUNICATION UTILITY FACILITIES DURING EXCAVATION OF CITY TRENCH WHEN PARALLELING COMMUNICATION FACILITIES LIE COMPLETELY IN THE PROPOSED CITY TRENCH	L.F.	145
JB 330T2.1	COMMUNICATIONS FACILITY OPERATOR(S) REQUESTS THE TRENCH BE WIDENED	L.F.	25
JB 330T2.2	COMMUNICATION FACILITY OPERATOR(S) REQUESTS THE TRENCH / SHEETING BE MODIFIED	L.F.	25
JB 350	OVERHEAD ACCOMMODATION PROTECTION OF OVERHEAD FACILITIES, POLES, AND APPURTENANCES	L.S.	1
JB 351	INSTALL AND REMOVE "A" FRAME ON UTILITY POLES	EACH	2
JB 400	TEST PITS FOR UTILITY FACILITIES	C.Y.	15
JB 401	TRENCH EXCAVATION FOR ADJUSTMENT OF UTILITY FACILITIES	C.Y.	489
JB 402T.1A	EXISTING CONCRETE ENCASED TELECOMMUNICATION CONDUITS PLACED IN FINAL POSITION WITH CONCRETE ENCASEMENT	L.F.	259
JB 402T.2A	EXISTING NON-CONCRETE ENCASED TELECOMMUNICATION CONDUITS PLACED IN FINAL POSITION WITH CONCRETE ENCASEMENT	L.F.	2393
JB 402T.3	ACM REMOVAL AND DISPOSAL OF VERIZON/ECS CONDUITS WITH ASBESTOS CONTAINING MATERIAL TRANSITE PIPES (ACM-TP) UP TO AND INCLUDING 4” DIAMETER	L.F.	25
JB 402T.V1A	EXISTING VACANT CONCRETE ENCASED TELECOMMUNICATION CONDUITS PLACED IN FINAL POSITION WITH CONCRETE ENCASEMENT	L.F.	59
JB 402T.V2A	EXISTING VACANT NON-CONCRETE ENCASED TELECOMMUNICATION CONDUITS PLACED IN FINAL POSITION WITH CONCRETE ENCASEMENT	L.F.	242
JB 403T.2	FURNISH AND INSTALL STEEL PROTECTION PLATES FOR UTILITES FACILITES (3/8" THICK)	S.F.	25
JB 406	EXCAVATION FOR UTILITY STRUCTURE	C.Y.	2

JOINT BID WORKSHEET

QED1063AC - INSTALLATION OF DISTRIBUTION WATER MAINS

BOROUGH OF QUEENS

ENGINEER'S ESTIMATE OF QUANTITY AND TYPES OF INTERFERENCE

FOR VERIZON

JOINT BID ITEM NUMBER	DESCRIPTION	Unit of Measure	Estimated Quantity
JB 450.3	CONSTRUCTION FIELD SUPPORT - MEDIUM SIZE CREW (TYPE .3)	CREW/HR	20
JB 500	REMOVAL OF ABANDONED UTILITY CONDUITS (NON-CONCRETE ENCASED)	L.F.	57
JB 638 NT	INSTALLATION OF FIELD CONSTRUCTED TELEPHONE UTILITY STRUCTURE	C.Y.	1
JB 638 RT	BREAK OUT AND REMOVE UTILITY STRUCTURE CONTAINING ACTIVE CABLES	C.Y.	1
JB 700	SPECIAL MODIFICATION OF WORK METHODS TO ACCOMMODATE/PROTECT UNDERGROUND FACILITIES WITH LIMITED COVER	C.Y.	25
JB 802A	SPECIAL CARE EXCAVATION AND RESTORATION FOR SIDEWALK WORK	S.F.	25
JB 802B	SPECIAL CARE EXCAVATION AND RESOTRATION FOR CURB WORK	L.F.	5
JB 803.2	LINE CUT BY PNEUMATIC TOOLS IN LIEU OF SAW CUT ASSOCIATED WITH ROADWAY REMOVAL OPERATIONS (LINE CUT ANY COMBINATION OF ASPHALT AND CONCRETE ROADWAY)	L.F.	25
JB 9.28	**Utility Expanded Work Allowance**	**FS**	**1**

VERIZON JOINT BIDDING SCOPE OF WORK

SUPPORT & PROTECTION

QED1063AC - INSTALLATION OF DISTRIBUTION WATER MAINS

BOROUGH OF QUEENS

JB 108.1	**UTILITIES CROSSING TRENCH FOR WATERMAIN UP TO AND INCL. 12" DIAMETER (TYPE .1)**	**EA.**
	At the following locations:	
	INTERSECTION OF ONDERDONK AVENUE AND MADISON STREET	1
	N/S OF ONDERDONK AVENUE, W/O MADISON STREET	1
	N/S OF ONDERDONK AVENUE, E/O MADISON STREET	1
	INTERSECTION OF SUNBURY ROAD AND MERRICK BOULEVARD	1
	N/S OF MERRICK BOULEVARD, E/O SUNBURY ROAD	1
	INTERSECTION OF BAISLEY BOULEVARD AND MERRICK BOULEVARD	3
	N/S OF MERRICK BOULEVARD, W/O URSINA ROAD	1
	N/S OF MERRICK BOULEVARD, INTERSECTION OF URSINA ROAD	1
	S/S OF MERRICK BOULEVARD, INTERSECTION OF URSINA ROAD	1
	N/S OF MERRICK BOULEVARD, E/O URSINA ROAD	1
	E/S OF 12TH AVENUE, S/O MERRICK BOULEVARD	2
	W/S OF 12TH AVENUE, S/O MERRICK BOULEVARD	1
	N/S OF AVERY AVENUE, E/O 131ST STREET	2
	N/S OF AVERY AVENUE, W/O COLLEGE POINT BOULEVARD	2
	E/S OF COLLEGE POINT BOULEVARD, INTERSECTION OF POPLE AVENUE	3
	E/S OF COLLEGE POINT BOULEVARD, N/O AVERY AVENUE	2
	E/S OF COLLEGE POINT BOULEVARD, INTERSECTION OF AVERY AVENUE	3
	W/S OF COLLEGE POINT BOULEVARD, INTERSECTION OF AVERY AVENUE	2
	E/S OF COLLEGE POINT BOULEVARD, S/O AVERY AVENUE	1
	E/S OF COLLEGE POINT BOULEVARD, S/O MAPLE AVENUE	1
	S/S OF SANFORD AVENUE, W/O COLLEGE POINT BOULEVARD	1
	E/S OF COLLEGE POINT BOULEVARD, INTERSECTION OF SANFORD AVENUE	1
	W/S OF COLLEGE POINT BOULEVARD, INTERSECTION OF SANFORD AVENUE	1
	E/S OF COLLEGE POINT BOULEVARD, N/O 41ST ROAD	2
	W/S OF COLLEGE POINT BOULEVARD, N/O 41ST ROAD	1
	N/S OF 112TH AVENUE, E/O FARMERS BOULEVARD	1
	AS ENCOUNTERED OR DIRECTED BY VERIZON FIELD REPRESENTATIVE	1
	Total quantity for JB 108.1 = 39	
JB 108.2	**UTILITIES CROSSING TRENCH FOR WATERMAIN UP TO AND INCL. 12" DIAMETER (TYPE .2)**	**EA.**
	At the following locations:	
	INTERSECTION OF MERRICK BOULEVARD AND URSINA ROAD	1
	AS ENCOUNTERED OR DIRECTED BY VERIZON FIELD REPRESENTATIVE	1
	Total quantity for JB 108.2 = 2	
JB 108.3	**UTILITIES CROSSING TRENCH FOR WATERMAIN UP TO AND INCL. 12" DIAMETER (TYPE .3)**	**EA.**
	At the following locations:	
	E/S OF MADISON STREET, S/O ONDERDONK AVENUE	1
	INTERSECTION OF SUNBURY ROAD AND MERRICK BOULEVARD	1
	AS ENCOUNTERED OR DIRECTED BY VERIZON FIELD REPRESENTATIVE	1
	Total quantity for JB 108.3 = 3	

VERIZON JOINT BIDDING SCOPE OF WORK

SUPPORT & PROTECTION

QED1063AC - INSTALLATION OF DISTRIBUTION WATER MAINS

BOROUGH OF QUEENS

JB 109.1	**UTILITIES CROSSING TRENCH FOR WATERMAIN OVER 12" AND UP TO 24" DIAMETER (TYPE .1)**	**EA.**
	At the following locations:	
	INTERSECTION OF BAISLEY BOULEVARD AND MERRICK BOULEVARD	1
	AS ENCOUNTERED OR DIRECTED BY VERIZON FIELD REPRESENTATIVE	1
	Total quantity for JB 109.1 = 2	
JB 300.1	**SPECIAL CARE EXCAVATION AND BACKFILLING IN TRENCH LESS THAN 5' DEEP**	**C.Y.**
	At the following locations:	
	INTERSECTION OF SUNBURY ROAD AND MERRICK BOULEVARD	3
	N/S OF AVERY AVENUE, E/O COLLEGE POINT BOULEVARD	2
	W/S OF COLLEGE POINT BOULEVARD, INTERSECTION OF AVERY AVENUE	5
	AS ENCOUNTERED OR DIRECTED BY VERIZON FIELD REPRESENTATIVE	25
	Total quantity for JB 300.1 = 35	
JB 300.2	**SPECIAL CARE EXCAVATION AND BACKFILLING IN TRENCH GREATER THAN 5' DEEP**	**C.Y.**
	At the following locations:	
	AS ENCOUNTERED OR DIRECTED BY VERIZON FIELD REPRESENTATIVE	25
	Total quantity for JB 300.2 = 25	
JB 330T1	**SUPPORT AND PROTECTION OF COMMUNICATION UTILITY FACILITIES DURING EXCAVATION OF CITY TRENCH WHEN PARALLELING COMMUNICATION FACILITIES LIE COMPLETELY IN THE**	**L.F.**
	At the following locations:	
	INTERSECTION OF BAISLEY BOULEVARD AND MERRICK BOULEVARD	20
	N/S OF AVERY AVENUE, E/O COLLEGE POINT BOULEVARD	20
	S/S OF SANFORD AVENUE, W/O COLLEGE POINT BOULEVARD	70
	AS ENCOUNTERED OR DIRECTED BY VERIZON FIELD REPRESENTATIVE	35
	Total quantity for JB 330T1 = 145	
JB 330T2.1	**COMMUNICATIONS FACILITY OPERATOR(S) REQUESTS THE TRENCH BE WIDENED**	**L.F.**
	At the following locations:	
	AS ENCOUNTERED OR DIRECTED BY VERIZON FIELD REPRESENTATIVE	25
	Total quantity for JB 330T2.1 = 25	
JB 330T2.2	**COMMUNICATION FACILITY OPERATOR(S) REQUESTS THE TRENCH / SHEETING BE MODIFIED**	**L.F.**
	At the following locations:	
	AS ENCOUNTERED OR DIRECTED BY VERIZON FIELD REPRESENTATIVE	25
	Total quantity for JB 330T2.2 = 25	
JB 350	**OVERHEAD ACCOMMODATION PROTECTION OF OVERHEAD FACILITIES, POLES, AND APPURTENANCES**	**L.S.**
	At the following locations:	
	AS ENCOUNTERED OR DIRECTED BY VERIZON FIELD REPRESENTATIVE	1
	Total quantity for JB 350 = 1	

VERIZON JOINT BIDDING SCOPE OF WORK

SUPPORT & PROTECTION

QED1063AC - INSTALLATION OF DISTRIBUTION WATER MAINS

BOROUGH OF QUEENS

JB 351	**INSTALL AND REMOVE "A" FRAME ON UTILITY POLES**	**EACH**
	At the following locations:	
	AS ENCOUNTERED OR DIRECTED BY VERIZON FIELD REPRESENTATIVE	2
	Total quantity for JB 351 = 2	
JB 400	**TEST PITS FOR UTILITY FACILITIES**	**C.Y.**
	At the following locations:	
	AS ENCOUNTERED OR DIRECTED BY VERIZON FIELD REPRESENTATIVE	15
	Total quantity for JB 400 = 15	
JB 401	**TRENCH EXCAVATION FOR ADJUSTMENT OF UTILITY FACILITIES**	**C.Y.**
	At the following locations:	
	E/S OF MADISON STREET, S/O ONDERDONK AVENUE	30
	INTERSECTION OF SUNBURY ROAD AND MERRICK BOULEVARD	18
	N/S OF MERRICK BOULEVARD, INTERSECTION OF URSINA ROAD	10
	INTERSECTION OF MERRICK BOULEVARD AND URSINA ROAD	31
	W/S OF 12TH AVENUE, S/O MERRICK BOULEVARD	18
	E/S OF COLLEGE POINT BOULEVARD, FROM S/O MAPLE AVENUE TO S/O POPLE AVENUE	297
	E/S OF COLLEGE POINT BOULEVARD, N/O AVERY AVENUE	15
	INTERSECTION OF FARMERS BOULEVARD AND 112TH ROAD	50
	AS ENCOUNTERED OR DIRECTED BY VERIZON FIELD REPRESENTATIVE	20
	Total quantity for JB 401 = 489	
JB 402T.1A	**EXISTING CONCRETE ENCASED TELECOMMUNICATION CONDUITS PLACED IN FINAL POSITION WITH CONCRETE ENCASEMENT**	**L.F.**
	At the following locations:	
	N/S OF MERRICK BOULEVARD, INTERSECTION OF URSINA ROAD	20
	INTERSECTION OF MERRICK BOULEVARD AND URSINA ROAD	189
	W/S OF 12TH AVENUE, S/O MERRICK BOULEVARD	25
	AS ENCOUNTERED OR DIRECTED BY VERIZON FIELD REPRESENTATIVE	25
	Total quantity for JB 402T.1A = 259	

VERIZON JOINT BIDDING SCOPE OF WORK

SUPPORT & PROTECTION

QED1063AC - INSTALLATION OF DISTRIBUTION WATER MAINS

BOROUGH OF QUEENS

JB 402T.2A	**EXISTING NON-CONCRETE ENCASED TELECOMMUNICATION CONDUITS PLACED IN FINAL POSITION WITH CONCRETE ENCASEMENT**	**L.F.**
	At the following locations:	
	E/S OF MADISON STREET, S/O ONDERDONK AVENUE	410
	INTERSECTION OF SUNBURY ROAD AND MERRICK BOULEVARD	175
	E/S OF COLLEGE POINT BOULEVARD, FROM S/O MAPLE AVENUE TO S/O POPLE AVENUE	1140
	E/S OF COLLEGE POINT BOULEVARD, N/O AVERY AVENUE	108
	INTERSECTION OF FARMERS BOULEVARD AND 112TH ROAD	360
	AS ENCOUNTERED OR DIRECTED BY VERIZON FIELD REPRESENTATIVE	200
	Total quantity for JB 402T.2A = 2393	
JB 402T.3	**ACM REMOVAL AND DISPOSAL OF VERIZON/ECS CONDUITS WITH ASBESTOS CONTAINING MATERIAL TRANSITE PIPES (ACM-TP) UP TO AND INCLUDING 4" DIAMETER**	**L.F.**
	At the following locations:	
	AS ENCOUNTERED OR DIRECTED BY VERIZON FIELD REPRESENTATIVE	25
	Total quantity for JB 402T.3 = 25	
JB 402T.V1A	**EXISTING VACANT CONCRETE ENCASED TELECOMMUNICATION CONDUITS PLACED IN FINAL POSITION WITH CONCRETE ENCASEMENT**	**L.F.**
	At the following locations:	
	INTERSECTION OF MERRICK BOULEVARD AND URSINA ROAD	54
	AS ENCOUNTERED OR DIRECTED BY VERIZON FIELD REPRESENTATIVE	5
	Total quantity for JB 402T.V1A = 59	
JB 402T.V2A	**EXISTING VACANT NON-CONCRETE ENCASED TELECOMMUNICATION CONDUITS PLACED IN FINAL POSITION WITH CONCRETE ENCASEMENT**	**L.F.**
	At the following locations:	
	E/S OF MADISON STREET, S/O ONDERDONK AVENUE	82
	INTERSECTION OF SUNBURY ROAD AND MERRICK BOULEVARD	50
	INTERSECTION OF FARMERS BOULEVARD AND 112TH ROAD	80
	AS ENCOUNTERED OR DIRECTED BY VERIZON FIELD REPRESENTATIVE	30
	Total quantity for JB 402T.V2A = 242	
JB 403T.2	**FURNISH AND INSTALL STEEL PROTECTION PLATES FOR UTILITES FACILITES (3/8" THICK)**	**S.F.**
	At the following locations:	
	AS ENCOUNTERED OR DIRECTED BY VERIZON FIELD REPRESENTATIVE	25
	Total quantity for JB 403T.2 = 25	

VERIZON JOINT BIDDING SCOPE OF WORK

SUPPORT & PROTECTION

QED1063AC - INSTALLATION OF DISTRIBUTION WATER MAINS

BOROUGH OF QUEENS

JB 406	**EXCAVATION FOR UTILITY STRUCTURE**	**C.Y.**
	At the following locations:	
	INTERSECTION OF SUNBURY ROAD AND MERRICK BOULEVARD	2
	Total quantity for JB 406 = 2	
JB 450.3	**CONSTRUCTION FIELD SUPPORT - MEDIUM SIZE CREW (TYPE .3)**	**CREW/HR**
	At the following locations:	
	AS ENCOUNTERED OR DIRECTED BY VERIZON FIELD REPRESENTATIVE	20
	Total quantity for JB 450.3 = 20	
JB 700	**SPECIAL MODIFICATION OF WORK METHODS TO ACCOMMODATE/PROTECT UNDERGROUND FACILITIES WITH LIMITED COVER**	**C.Y.**
	At the following locations:	
	AS ENCOUNTERED OR DIRECTED BY VERIZON FIELD REPRESENTATIVE	25
	Total quantity for JB 700 = 25	
JB 500	**REMOVAL OF ABANDONED MASONRY FOR UTILITY FACILITIES**	**C.Y.**
	At the following locations:	
	N/S OF ONDERDONK AVE. W/O MADISON ST.	10
	INTERSECTION OF BAISLEY BOULEVARD AND MERRICK BOULEVARD	5
	S/S OF MERRICK BOULEVARD, INTERSECTION OF URSINA ROAD	5
	N/S OF MERRICK BOULEVARD, E/O URSINA ROAD	5
	E/S OF COLLEGE POINT BOULEVARD, INTERSECTION OF MAPLE AVENUE	5
	W/S OF COLLEGE POINT BOULEVARD, INTERSECTION OF MAPLE AVENUE	5
	E/S OF COLLEGE POINT BOULEVARD, INTERSECTION OF 41ST ROAD	1
	W/S OF COLLEGE POINT BOULEVARD, INTERSECTION OF 41ST ROAD	1
	N/S OF 112TH AVENUE, E/O FARMERS BOULEVARD	15
	N/S OF 112TH ROAD, E/O FARMERS BOULEVARD	5
	Total quantity for JB 500 = 57	
JB 638 NT	**BREAK OUT AND REMOVE UTILITY STRUCTURE**	**C.Y.**
	At the following locations:	
	INTERSECTION OF SUNBURY ROAD AND MERRICK BOULEVARD	1
	Total quantity for JB 638 NT = 1	
JB 638 RT	**SPECIAL MODIFICATION OF WORK METHODS TO ACCOMMODATE/PROTECT UNDERGROUND FACILITIES WITH LIMITED COVER**	**C.Y.**
	At the following locations:	
	INTERSECTION OF SUNBURY ROAD AND MERRICK BOULEVARD	1
	Total quantity for JB 638 RT = 1	

VERIZON JOINT BIDDING SCOPE OF WORK

SUPPORT & PROTECTION

QED1063AC - INSTALLATION OF DISTRIBUTION WATER MAINS

BOROUGH OF QUEENS

JB 802A	**SPECIAL CARE EXCAVATION AND RESTORATION FOR SIDEWALK WORK**	**S.F.**
	At the following locations:	
	AS ENCOUNTERED OR DIRECTED BY VERIZON FIELD REPRESENTATIVE	25
	Total quantity for JB 802A = 25	
JB 802B	**SPECIAL CARE EXCAVATION AND RESOTRATION FOR CURB WORK**	**L.F.**
	At the following locations:	
	AS ENCOUNTERED OR DIRECTED BY VERIZON FIELD REPRESENTATIVE	5
	Total quantity for JB 802B = 5	
JB 803.2	**LINE CUT BY PNEUMATIC TOOLS IN LIEU OF SAW CUT ASSOCIATED WITH ROADWAY REMOVAL OPERATIONS (LINE CUT ANY COMBINATION OF ASPHALT AND CONCRETE ROADWAY)**	**L.F.**
	At the following locations:	
	AS ENCOUNTERED OR DIRECTED BY VERIZON FIELD REPRESENTATIVE	25
	Total quantity for JB 803.2 = 25	
JB 9.28	UTILITY EXPANDED WORK ALLOWANCE	F.S.
	Various Locations as Required	1
	Total quantity for JB 9.28 = 1	

UTILITY CONTRACT INCLUSION ANALYSIS
BID ITEM ACCOMMODATION
QED1063AC - INSTALLATION OF DISTRIBUTION WATER MAINS
BOROUGH OF QUEENS
ENGINEER'S ESTIMATE OF QUANTITY AND TYPES OF INTERFERENCE

FOR VERIZON

BID ITEM NUMBER	DESCRIPTION	Unit of Measure	Estimated Quantity
4.02 CB	ASPHALTIC CONCRETE MIXTURE	TONS.	65
4.02 AG	ASPHALTIC CONCRETE WEARING COURSE, 3" THICK	S.Y.	396
4.04 H	CONCRETE BASE FOR PAVEMENT, VARIABLE THICKNESS, FOR TRENCH RESTORATION (HIGH EARLY STRENGTH)	C.Y.	99
4.13 AAS	4" CONCRETE SIDEWALK (UNPIGMENTED)	S.F.	56
6.55	SAWCUTTING EXISTING PAVEMENT	L.F.	1129
60.11R612	FURNISHING AND DELIVERING 12" DUCTILE IRON RESTRAINED JOINT PIPE (CLASS 56)	L.F.	20
60.12D12	LAYING 12" DUCTILE IRON PIPE AND FITTINGS	L.F.	20
60.13M0A24	FURNISHING AND DELIVERING DUCTILE IRON MECHANICAL JOINT FITTINGS 24 INCH DIAMETER AND SMALLER, INCLUDING WEDGE TYPE RETAINER GLANDS	TONS	1

UTILITY INCLUSION SCOPE OF WORK

BID ITEM ACCOMMODATION

QED1063AC - INSTALLATION OF DISTRIBUTION WATER MAINS

BOROUGH OF QUEENS

4.02 CB **BINDER MIXTURE** **TONS.**

At the following locations:

E/S OF MADISON STREET, S/O ONDERDONK AVENUE	2
INTERSECTION OF SUNBURY ROAD AND MERRICK BOULEVARD	2
N/S OF MERRICK BOULEVARD, INTERSECTION OF URSINA ROAD	1
INTERSECTION OF MERRICK BOULEVARD AND URSINA ROAD	3
W/S OF 12TH AVENUE, S/O MERRICK BOULEVARD	1
E/S OF COLLEGE POINT BOULEVARD, FROM S/O MAPLE AVENUE TO S/O POPLE AVENUE	49
E/S OF COLLEGE POINT BOULEVARD, N/O AVERY AVENUE	2
INTERSECTION OF FARMERS BOULEVARD AND 112TH ROAD	5

Total quantity for 4.02 CB = 65

4.02 AG **ASPHALTIC CONCRETE WEARING COURSE, 3" THICK** **S.Y.**

At the following locations:

E/S OF MADISON STREET, S/O ONDERDONK AVENUE	13
INTERSECTION OF SUNBURY ROAD AND MERRICK BOULEVARD	12
N/S OF MERRICK BOULEVARD, INTERSECTION OF URSINA ROAD	9
INTERSECTION OF MERRICK BOULEVARD AND URSINA ROAD	15
W/S OF 12TH AVENUE, S/O MERRICK BOULEVARD	8
E/S OF COLLEGE POINT BOULEVARD, FROM S/O MAPLE AVENUE TO S/O POPLE AVENUE	296
E/S OF COLLEGE POINT BOULEVARD, N/O AVERY AVENUE	12
INTERSECTION OF FARMERS BOULEVARD AND 112TH ROAD	31

Total quantity for 4.02 AG = 396

4.04 H **CONCRETE BASE FOR PAVEMENT, VARIABLE THICKNESS, FOR TRENCH RESTORATION (HIGH EARLY STRENGTH)** **C.Y.**

At the following locations:

E/S OF MADISON STREET, S/O ONDERDONK AVENUE	3
INTERSECTION OF SUNBURY ROAD AND MERRICK BOULEVARD	3
N/S OF MERRICK BOULEVARD, INTERSECTION OF URSINA ROAD	2
INTERSECTION OF MERRICK BOULEVARD AND URSINA ROAD	4
W/S OF 12TH AVENUE, S/O MERRICK BOULEVARD	2
E/S OF COLLEGE POINT BOULEVARD, FROM S/O MAPLE AVENUE TO S/O POPLE AVENUE	74
E/S OF COLLEGE POINT BOULEVARD, N/O AVERY AVENUE	3
INTERSECTION OF FARMERS BOULEVARD AND 112TH ROAD	8

Total quantity for 4.04 H = 99

UTILITY INCLUSION SCOPE OF WORK

BID ITEM ACCOMMODATION

QED1063AC - INSTALLATION OF DISTRIBUTION WATER MAINS

BOROUGH OF QUEENS

4.13 AAS	**4" CONCRETE SIDEWALK (UNPIGMENTED)**	**S.F.**
	At the following locations:	
	E/S OF MADISON STREET, S/O ONDERDONK AVENUE	56
	Total quantity for 4.13 AAS = 56	
6.55	**SAWCUTTING EXISTING PAVEMENT**	**L.F.**
	At the following locations:	
	E/S OF MADISON STREET, S/O ONDERDONK AVENUE	56
	INTERSECTION OF SUNBURY ROAD AND MERRICK BOULEVARD	50
	N/S OF MERRICK BOULEVARD, INTERSECTION OF URSINA ROAD	40
	INTERSECTION OF MERRICK BOULEVARD AND URSINA ROAD	54
	W/S OF 12TH AVENUE, S/O MERRICK BOULEVARD	25
	E/S OF COLLEGE POINT BOULEVARD, FROM S/O MAPLE AVENUE TO S/O POPLE AVENUE	760
	E/S OF COLLEGE POINT BOULEVARD, N/O AVERY AVENUE	54
	INTERSECTION OF FARMERS BOULEVARD AND 112TH ROAD	90
	Total quantity for 6.55 = 1129	
60.11R612	**FURNISHING AND DELIVERING 12" DUCTILE IRON RESTRAINED JOINT PIPE (CLASS 56)**	**L.F.**
	At the following locations:	
	N/S OF MERRICK BOULEVARD, E/O SUNBURY ROAD	20
	Total quantity for 60.11R612 = 20	
60.12D12	**LAYING 12" DUCTILE IRON PIPE AND FITTINGS**	**L.F.**
	At the following locations:	
	N/S OF MERRICK BOULEVARD, E/O SUNBURY ROAD	20
	Total quantity for 60.12D12 = 20	
60.13M0A24	**FURNISHING AND DELIVERING DUCTILE IRON MECHANICAL JOINT FITTINGS 24 INCH DIAMETER AND SMALLER, INCLUDING WEDGE TYPE RETAINER GLANDS**	**TONS**
	At the following locations:	
	N/S OF MERRICK BOULEVARD, E/O SUNBURY ROAD	1
	Total quantity for 60.13M0A24 = 1	

ENGINEERS ESTIMATE OF QUANTITIES AND TYPES OF INTERFERENCE
CROWN CASTLE
QED1063AC
Installation of Distribution Water Mains
Bussing Ave & Edson Ave
E 193 St & Bainbridge Ave
College Point Blvd & Maple Ave
Borough of Queens

JOINT BID ITEM	Description	UNITS	ESTIMATED QUANTITY
JB 330TI	SUPPORT AND PROTECTION OF COMMUNICATION UTILITY FACILITIES DURING EXCAVATION OF CITY TRENCH WHEN PARALLELING COMMUNICATION FACILITIES LIE COMPLETELY IN THE PROPOSED CITY TRENCH	LF	133
JB 9.28	Utility Expanded Work Allowance	FS	1

The pathway to possible.
CrownCastle.com

CROWN CASTLE
SUPPORT & PROTECTON
QED1063AC

Installation of Distribution Water Mains

Bussing Ave & Edson Ave
E 193 St & Bainbridge Ave
College Point Blvd & Maple Ave

Borough of Queens

JB 330T1	**SUPPORT AND PROTECTION OF COMMUNICATION UTILITY FACILITIES DURING EXCAVATION OF CITY TRENCH WHEN PARALLELING COMMUNICATION FACILITIES LIE COMPLETELY IN THE PROPOSED CITY TRENCH**		**L.F**
	At the following locations:		
	Bussing Ave & Edson Ave		**55**
	E 193 St & Bainbridge Ave		8
	College Point Blvd & Maple Ave		**70**
		Total quantity for JB 330T1	**133**
JB 9.28	Utility Expanded Work Allowance		FS
	Various Locations as Reqired		
		Total Quantity for JB 9.29	1

The pathway to possible.
CrownCastle.com

QED1063AC
INSTALLATION OF DISTRIBUTION WATER MAINS
TOGETHER WITH ALL WORK INCIDENTAL THERETO
BOROUGH OF QUEENS

ITEM	DESCRIPTION	UNITS	ESTIMATED QUANTITY
JB 108.1	UTILITIES CROSSING TRENCH FOR WATER MAIN UP TO AND INCLUDING 12" DIAMETER (TYPE .1)	EA	6
JB 350	OVERHEAD ACCOMADATION PROTECTION OF OVERHEAD FACILITIES, POLES, AND APPURTENANCES (FOR DDC USE ONLY, NOT PNL)	L.S	1
JB 9.28	UTILITY EXPANDED WORK ALLOWANCE	FS	1

QED1063AC

Borough of Queens

Schedule JB: Scope of Work for Joint Bid Items

JB 108.1

UTILITIES CROSSING TRENCH FOR WATER MAIN UP TO AND INCLUDING 12" DIAMETER (TYPE .2)

AS DIRECTED BY AN ALTICE REPRESENTATIVE @ THE FOLLOWING LOCATIONS

	QTY(EA)
Location E-2 (UP11)	5
Location E-3 (UP12)	1

JB 108.1 **TOTAL** **6**

JB 350

OVERHEAD ACCOMADATION PROTECTION OF OVERHEAD FACILITIES, POLES, AND APPURTENANCES (FOR DDC USE ONLY, NOT PNL)

AS DIRECTED BY AN ALTICE REPRESENTATIVE @ THE FOLLOWING LOCATIONS

QTY(LS)
1

JB 350 **TOTAL** **1**

JB 9.28 UTILITY EXPANDED WORK ALLOWANCE

AS DIRECTED BY AN ALTICE REPRESNTATIVE @ AS VARIOUS LOCATIONS AS REQUIRED

		QTY(FS)
JB 9.28	TOTAL	1

EMPIRE CITY SUBWAY CO/LTD
A Verizon Company

JOB NO.: QED1063AC
JOB: INSTALLATION OF DISTRIBUTION WATER MAINS
BOROUGH OF THE BRONX

TEST PIT #: 2
TP DATE: 10/31/24
INSPECTOR: RN

LOCATION: N/S OF EAST FORDHAM ROAD, E/O BAINBRIDGE AVENUE
PURPOSE: LOCATE EXISTING UNDERGROUND FACILITIES
DIMENSION: 6'-0:X 4'-0"X 4'-7" VOLUME: 4.1 CY
SHEET NO. 01 OF 11

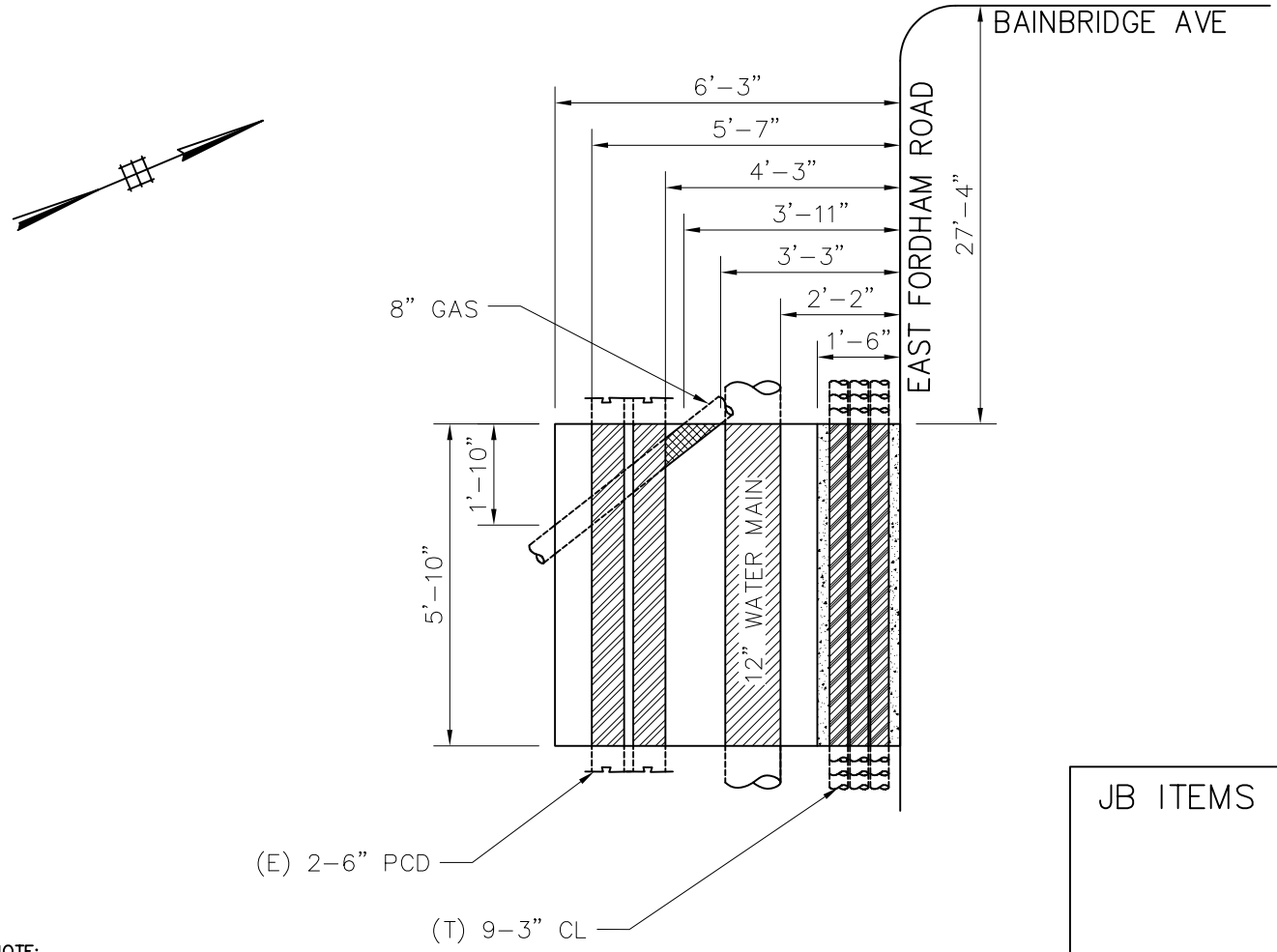

PLAN

JB ITEMS

NOTE:
1. ALL DRAWINGS SHOWING UTILITY SUPPORT AND PROTECT WORK ARE FOR REFERENCE ONLY.

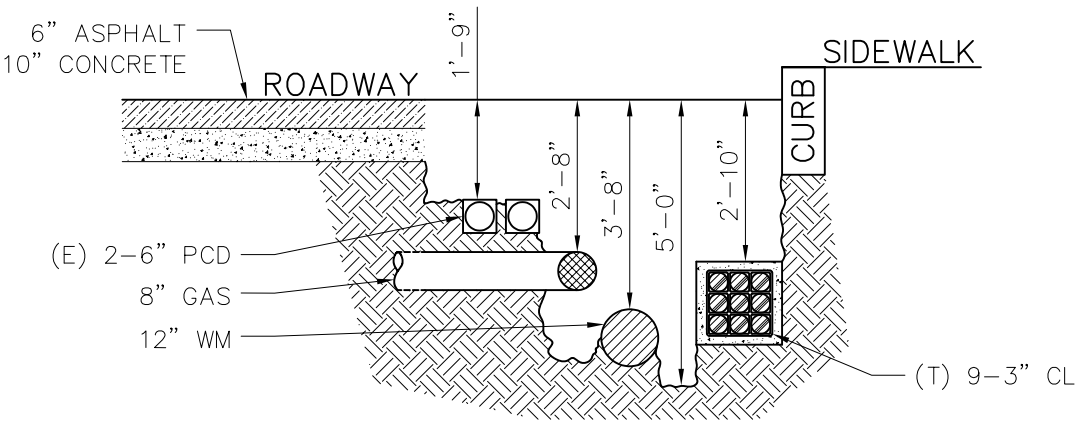

SECTION LOOKING WEST

verizon

JOB NO.: QED1063AC

JOB: INSTALLATION OF DISTRIBUTION WATER MAINS BOROUGH OF QUEENS

TEST PIT #: 3

TP DATE: 10/15/24

INSPECTOR: KP / DB

LOCATION: INTERSECTION OF MERRICK BOULEVARD AND BAISLEY BOULEVARD

PURPOSE: LOCATE EXISTING UNDERGROUND FACILITIES

DIMENSION: 13'–0"X4'–6"X5'–0" VOLUME: 10.8 CY SHEET NO. 02 OF 11

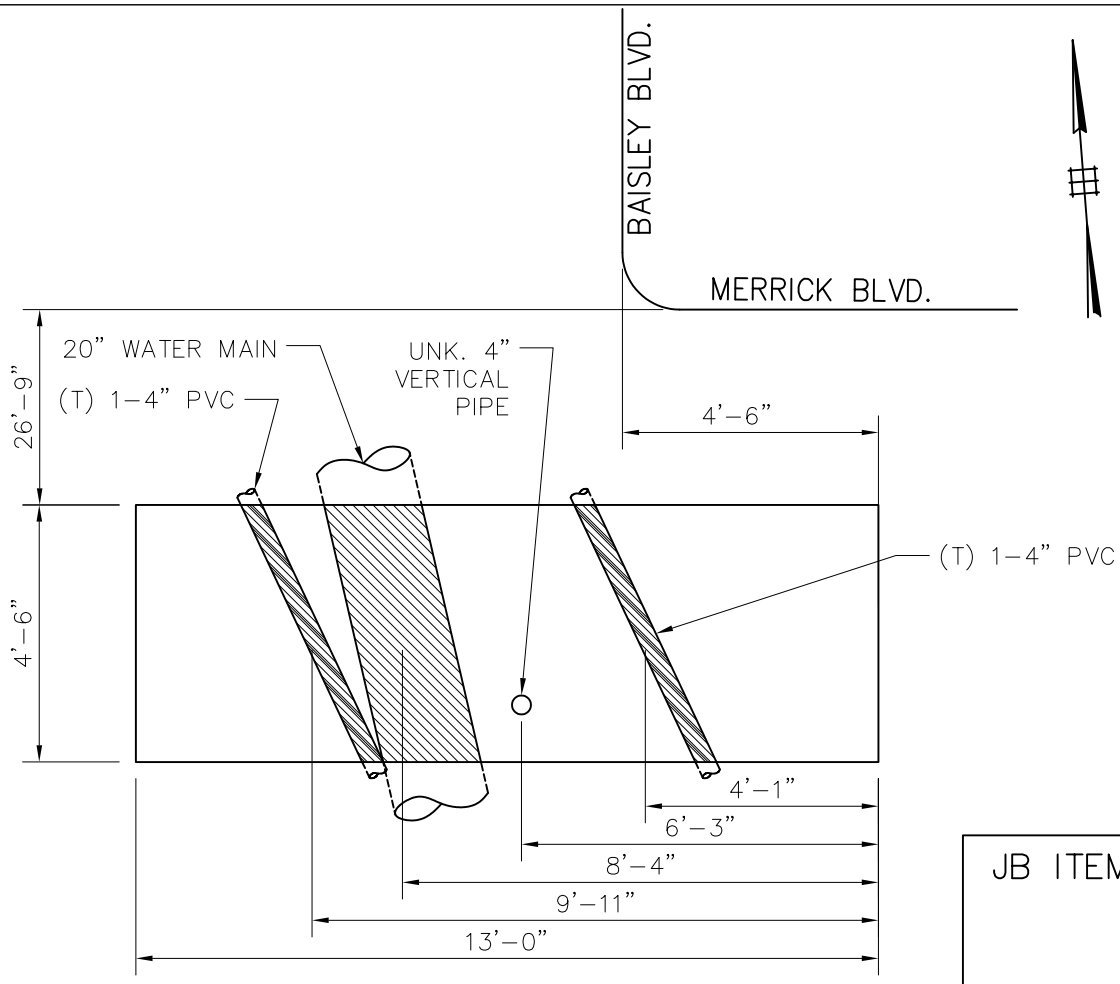

JB ITEMS

NOTE:
1. ALL DRAWINGS SHOWING UTILITY SUPPORT AND PROTECT WORK ARE FOR REFERENCE ONLY.

PLAN

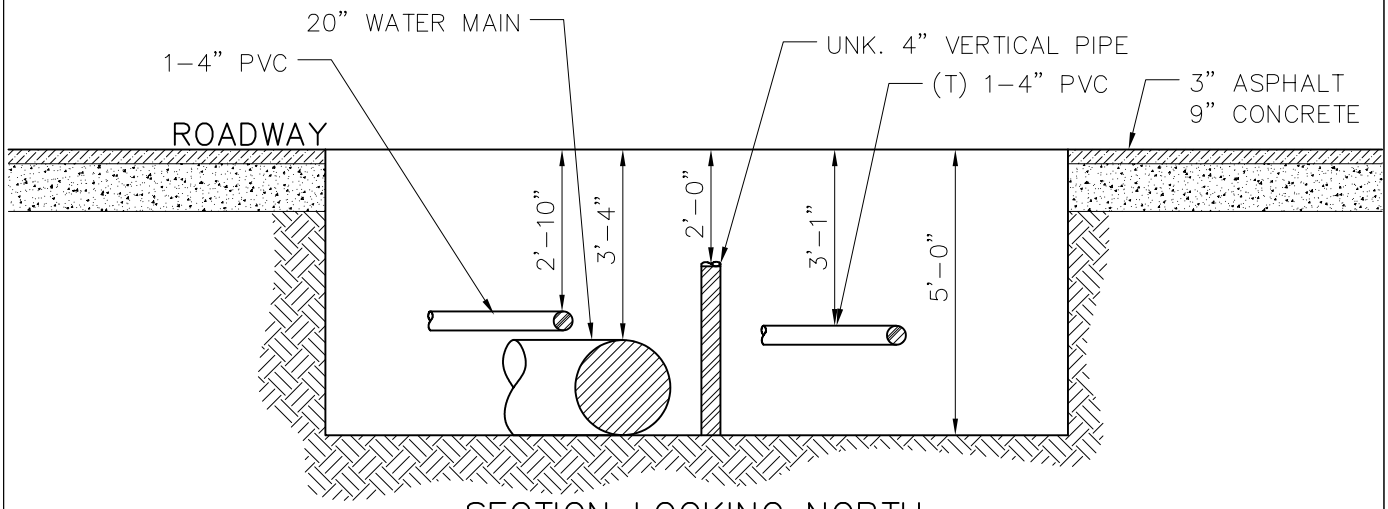

SECTION LOOKING NORTH

verizon

JOB NO.: QED1063AC

JOB: INSTALLATION OF DISTRIBUTION WATER MAINS BOROUGH OF QUEENS

TEST PIT #: 4

TP DATE: 10/15/24

INSPECTOR: KP / DB

LOCATION: N/S OF MERRICK BLVD, E/O BAISLEY BOULEVARD

PURPOSE: LOCATE EXISTING UNDERGROUND FACILITIES

DIMENSION: 6'–0"X4'–0"X5'–0" VOLUME: 4.4 CY SHEET NO. 03 OF 11

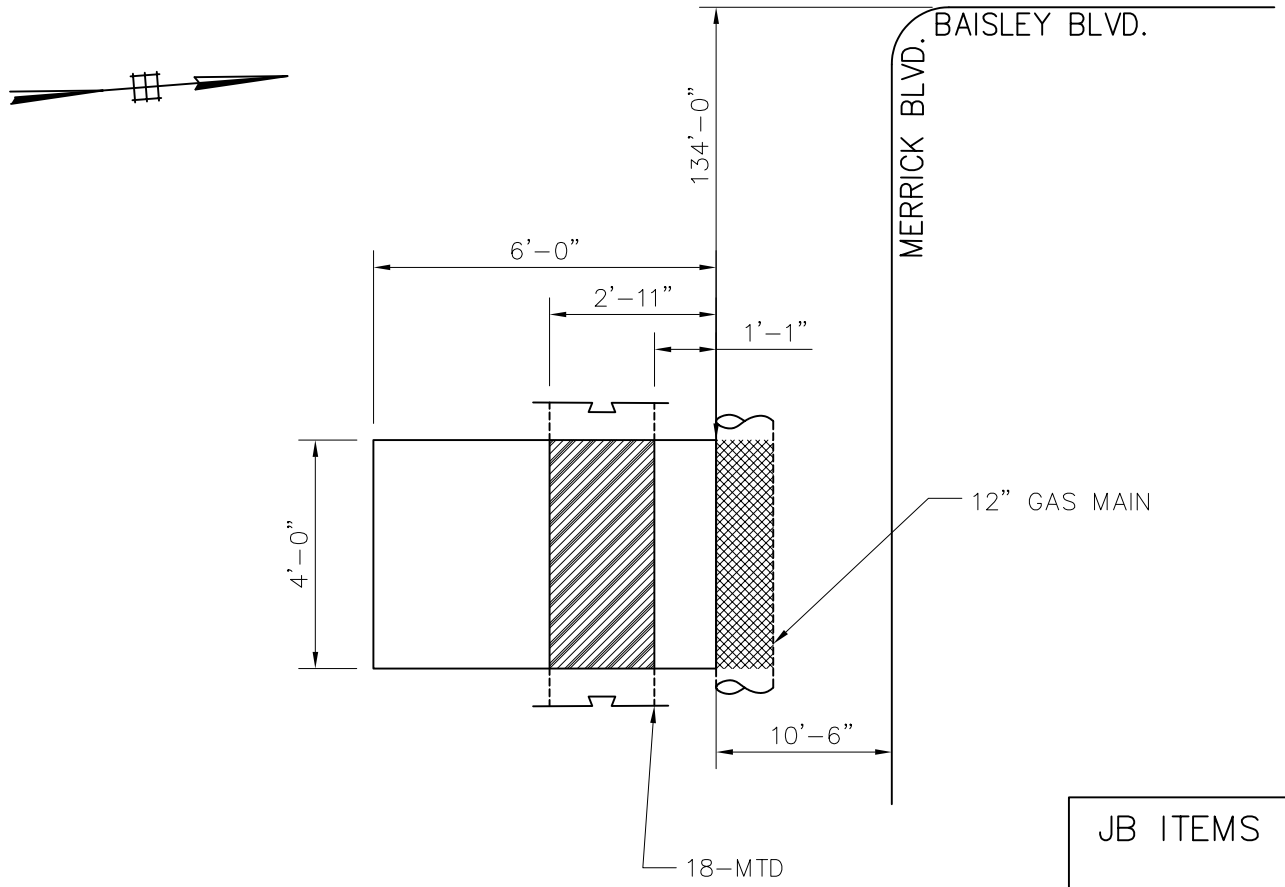

JB ITEMS

NOTE:
1. ALL DRAWINGS SHOWING UTILITY SUPPORT AND PROTECT WORK ARE FOR REFERENCE ONLY.

PLAN

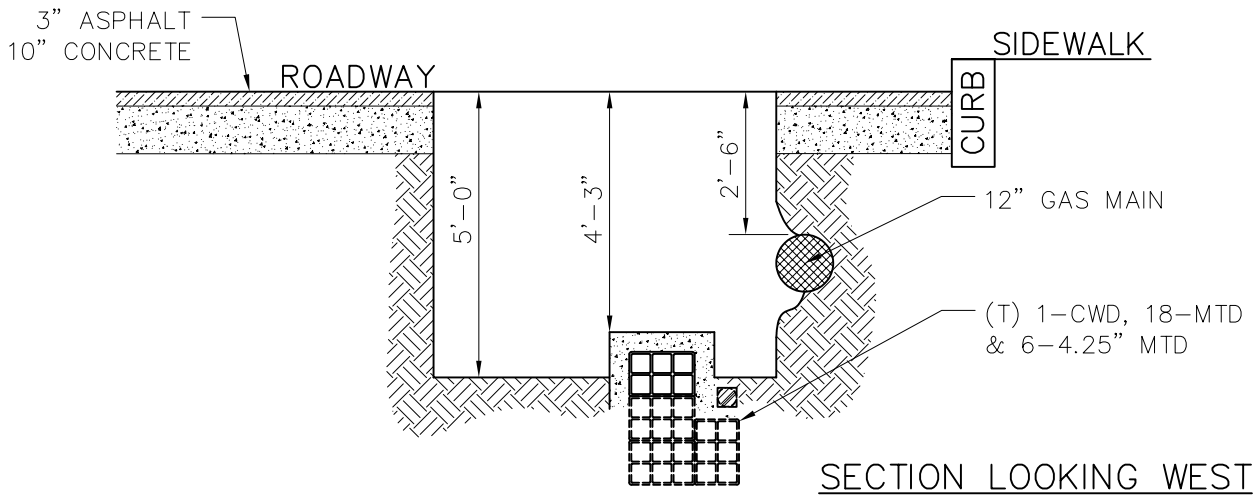

SECTION LOOKING WEST

verizon

JOB NO.: QED1063AC

JOB: INSTALLATION OF DISTRIBUTION WATER MAINS BOROUGH OF QUEENS

TEST PIT #: 5

TP DATE: 10/11/24

INSPECTOR: LM

LOCATION: N/S OF MERRICK BOULEVARD, INTERSECTION OF URSINA ROAD

PURPOSE: LOCATE EXISTING UNDERGROUND FACILITIES

DIMENSION: 6'-8"X5'-4"X4'-1"

VOLUME: 5.4 CY

SHEET NO. 04 OF 11

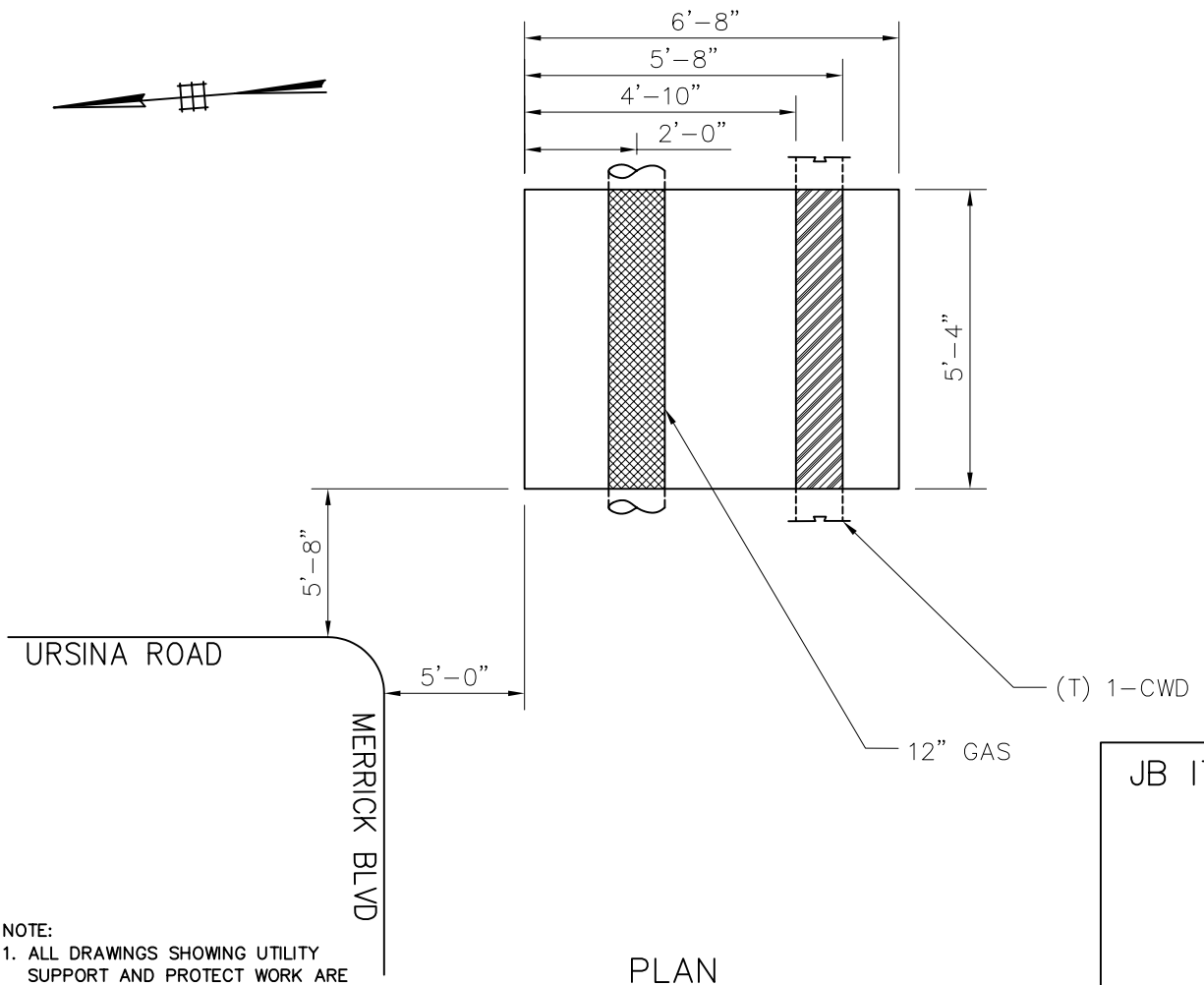

PLAN

JB ITEMS

NOTE:
1. ALL DRAWINGS SHOWING UTILITY SUPPORT AND PROTECT WORK ARE FOR REFERENCE ONLY.

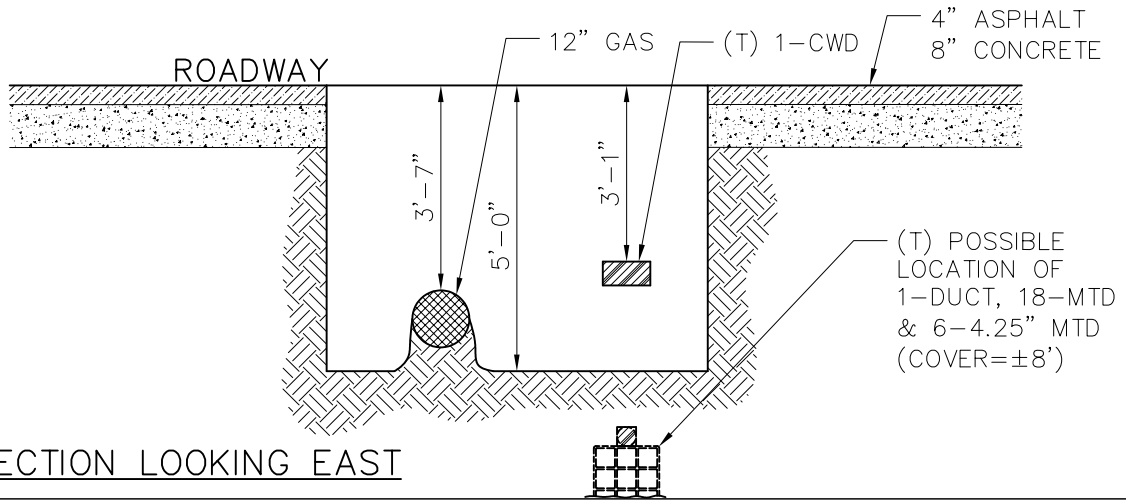

SECTION LOOKING EAST

verizon

JOB NO.: QED1063AC

JOB: INSTALLATION OF DISTRIBUTION WATER MAINS BOROUGH OF QUEENS

TEST PIT #: 6

TP DATE: 10/16/24

INSPECTOR: RN

LOCATION: INTERSECTION OF MERRICK ROAD AND URSINA ROAD

PURPOSE: LOCATE EXISTING UNDERGROUND FACILITIES

DIMENSION: 6'-7"X5'-6"X3'-10" VOLUME: 5.2 CY

SHEET NO. 05 OF 11

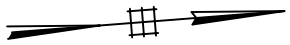

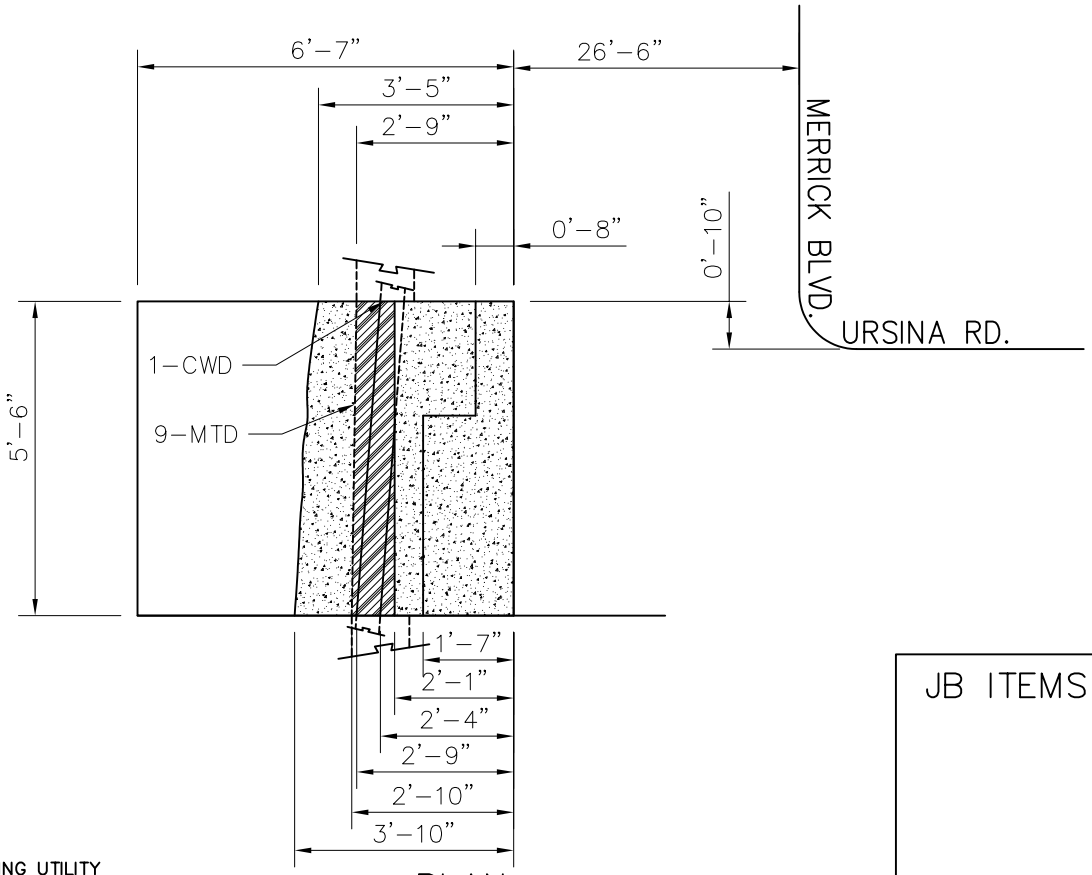

PLAN

JB ITEMS

NOTE:
1. ALL DRAWINGS SHOWING UTILITY SUPPORT AND PROTECT WORK ARE FOR REFERENCE ONLY.

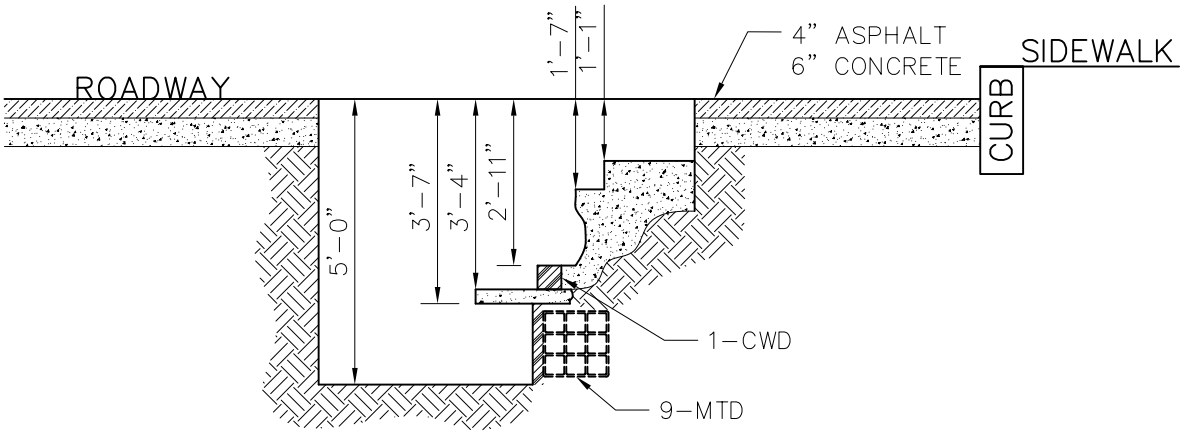

SECTION LOOKING WEST

verizon

JOB NO.: QED1063AC

JOB: INSTALLATION OF DISTRIBUTION WATER MAINS BOROUGH OF QUEENS

TEST PIT #: 7

TP DATE: 10/07/24

INSPECTOR: DB

LOCATION: E/S OF COLLEGE POINT BOULEVARD, INTERSECTION OF POPLE AVE

PURPOSE: LOCATE EXISTING UNDERGROUND FACILITIES

DIMENSION: 7'–0"X5'–0"X3'–6"

VOLUME: 4.6 CY

SHEET NO. 06 OF 11

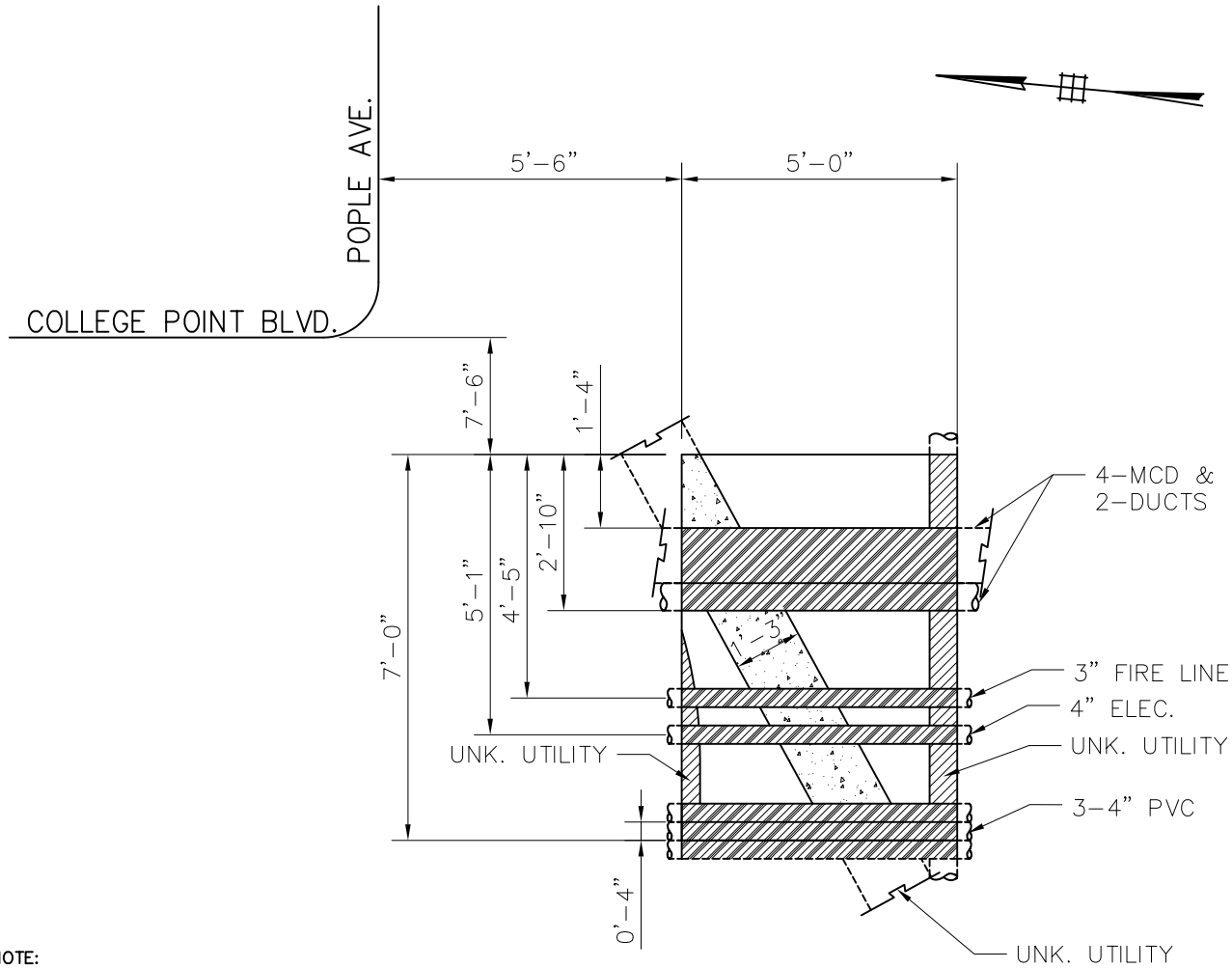

NOTE:
1. ALL DRAWINGS SHOWING UTILITY SUPPORT AND PROTECT WORK ARE FOR REFERENCE ONLY.

PLAN

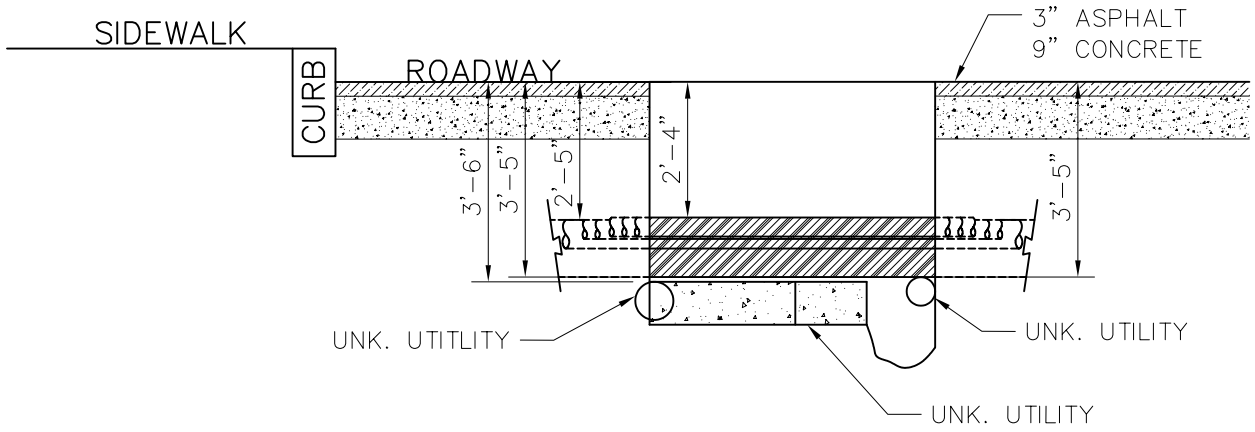

SECTION LOOKING EAST

verizon

JOB NO.: QED1063AC

JOB: INSTALLATION OF DISTRIBUTION WATER MAINS BOROUGH OF QUEENS

TEST PIT #: 8

TP DATE: 10/08/24

INSPECTOR: DB

LOCATION: E/S OF COLLEGE POINT BOULEVARD, INTERSECTION OF AVERY AVE

PURPOSE: LOCATE EXISTING UNDERGROUND FACILITIES

DIMENSION: 7'–0"X4'–0"X4'–0"

VOLUME: 4.0 CY

SHEET NO. 07 OF 11

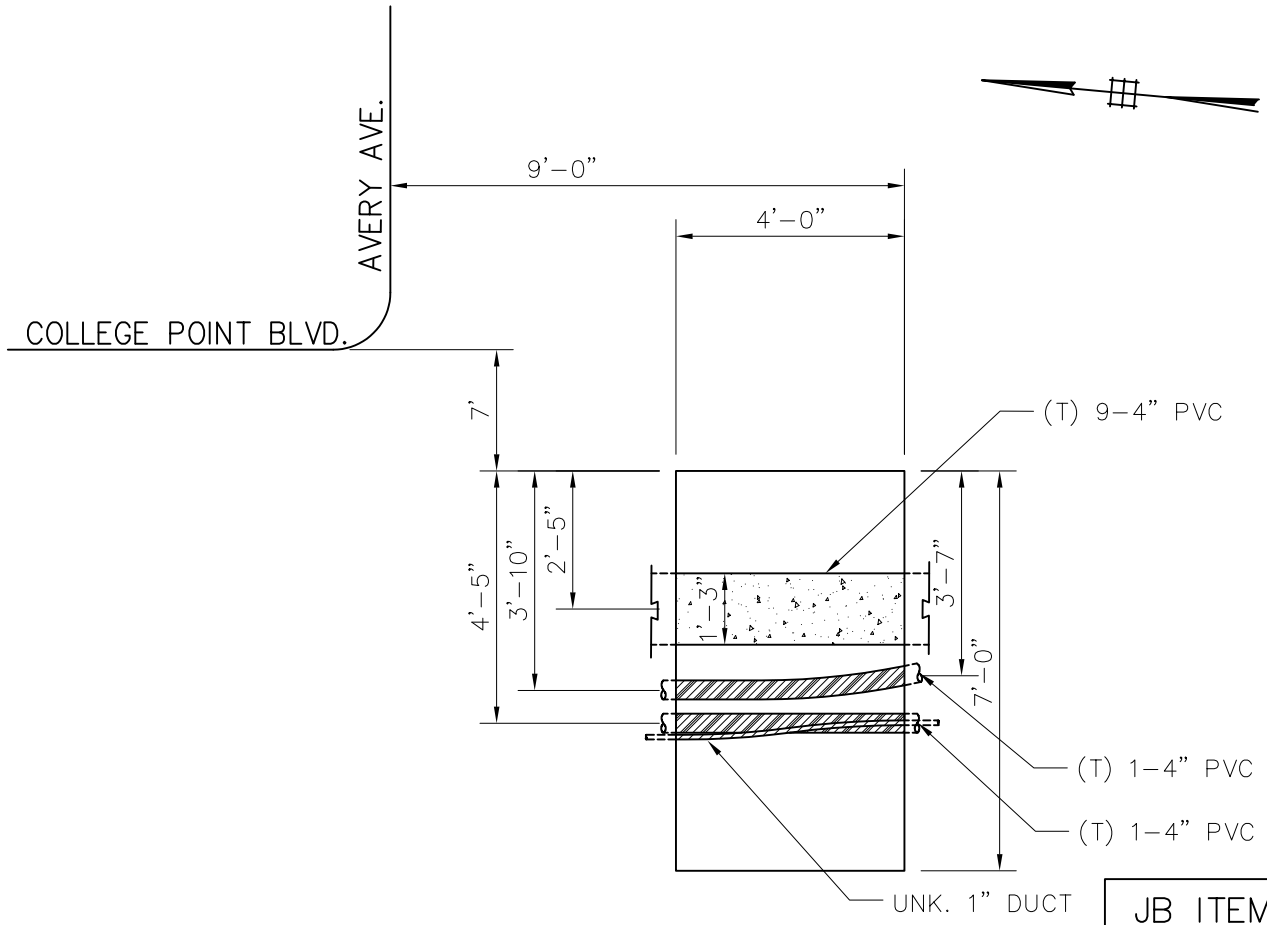

JB ITEMS

NOTE:
1. ALL DRAWINGS SHOWING UTILITY SUPPORT AND PROTECT WORK ARE FOR REFERENCE ONLY.

PLAN

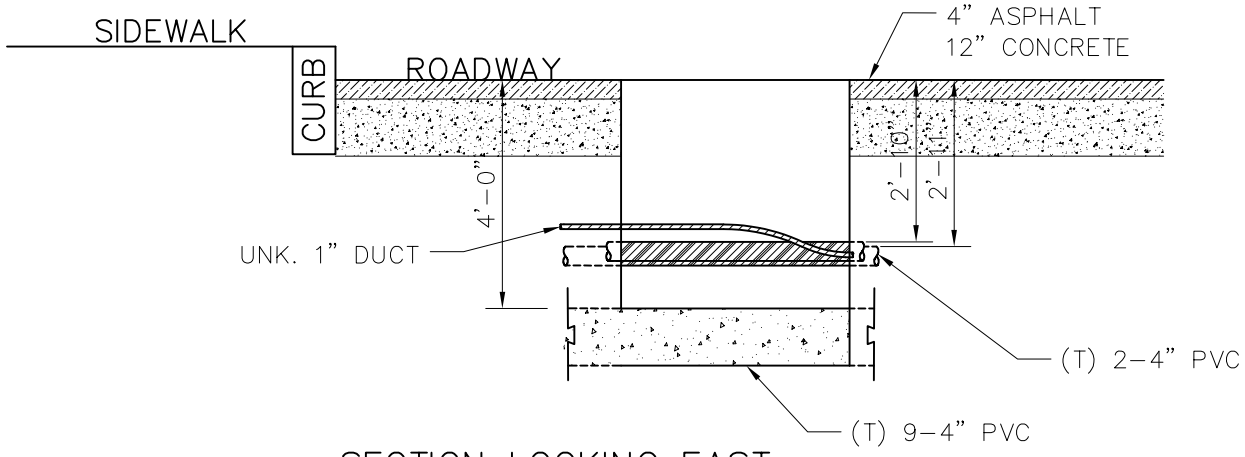

SECTION LOOKING EAST

verizon

JOB NO.: QED1063AC

JOB: INSTALLATION OF DISTRIBUTION WATER MAINS BOROUGH OF QUEENS

TEST PIT #: 9

TP DATE: 10/08/24

INSPECTOR: DB

LOCATION: E/S OF COLLEGE POINT BOULEVARD, N/O AVERY AVE

PURPOSE: LOCATE EXISTING UNDERGROUND FACILITIES

DIMENSION: 7'-0"X5'-0"X4'-6" VOLUME: 6.0 CY SHEET NO. 08 OF 11

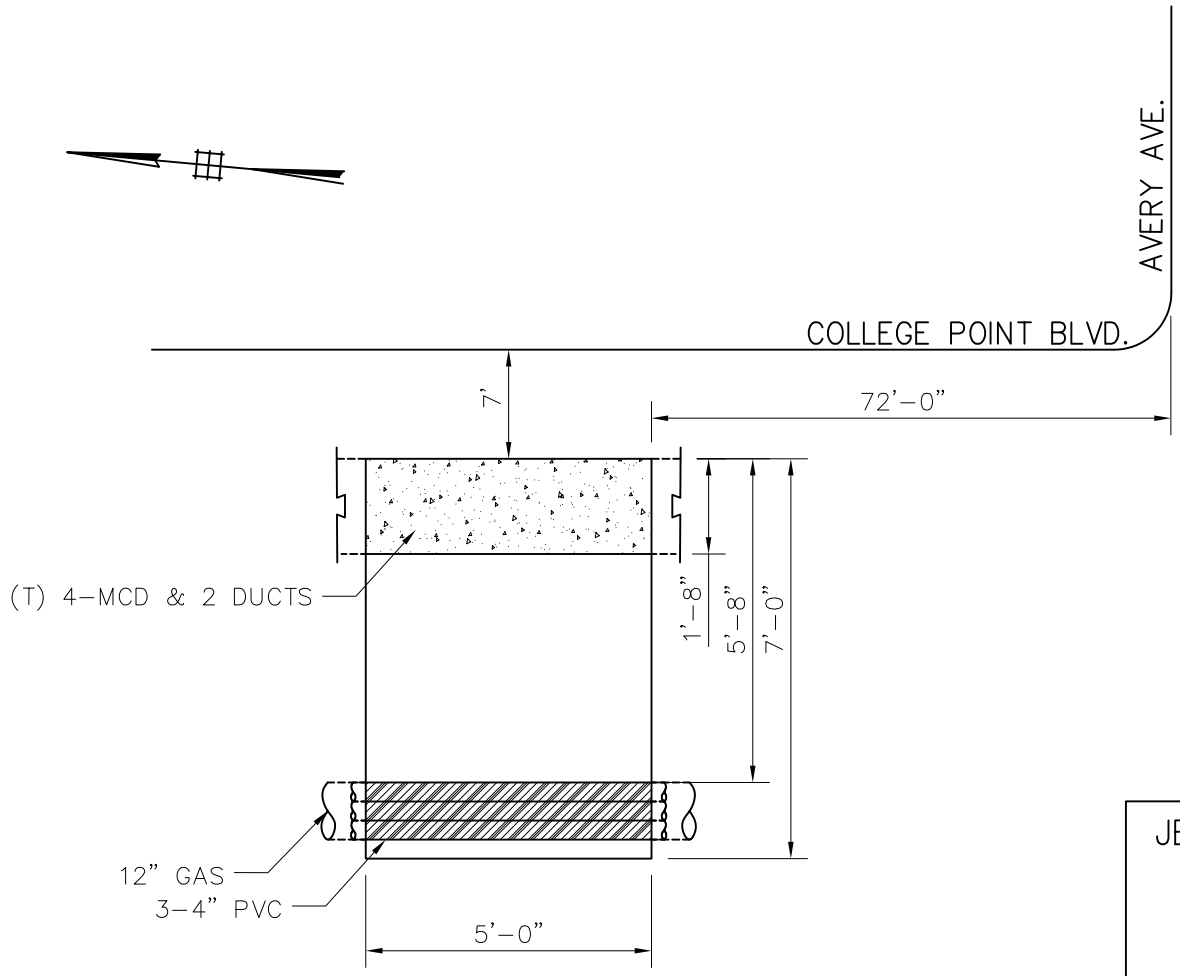

NOTE:
1. ALL DRAWINGS SHOWING UTILITY SUPPORT AND PROTECT WORK ARE FOR REFERENCE ONLY.

PLAN

JB ITEMS

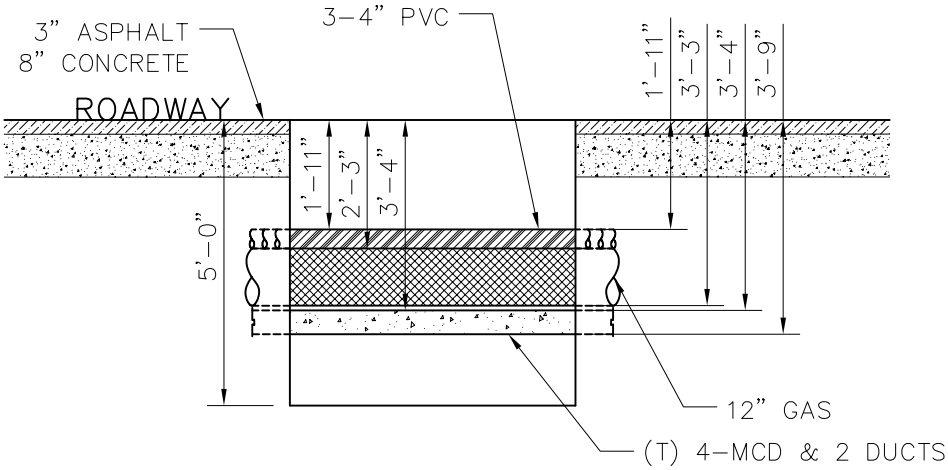

SECTION LOOKING EAST

verizon

JOB NO.: QED1063AC

JOB: INSTALLATION OF DISTRIBUTION WATER MAINS BOROUGH OF QUEENS

TEST PIT #: 10

TP DATE: 10/09/24

INSPECTOR: RN

LOCATION: E/S OF FARMERS BOULEVARD, INTERSECTION OF 111TH ROAD

PURPOSE: LOCATE EXISTING UNDERGROUND FACILITIES

DIMENSION: 6'-3"X4'-0"X5'-2" VOLUME: 4.8 CY SHEET NO. 09 OF 11

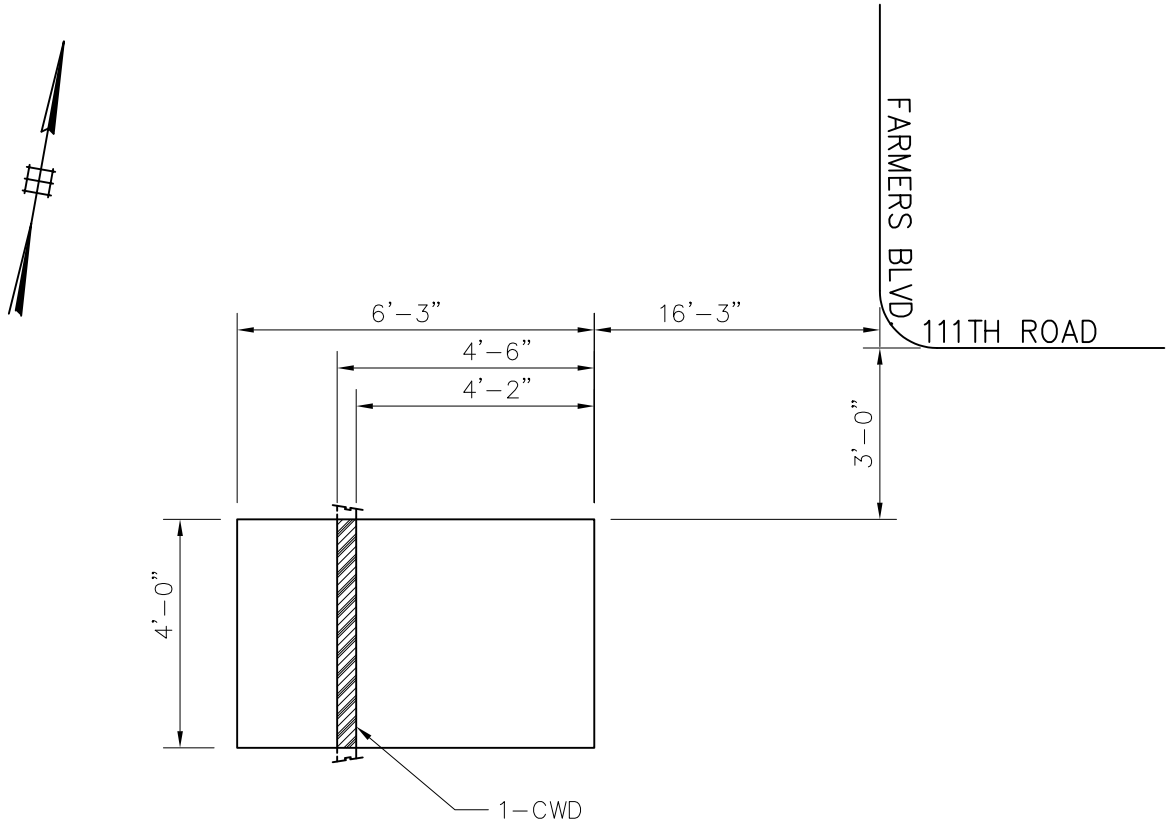

NOTE:
1. ALL DRAWINGS SHOWING UTILITY SUPPORT AND PROTECT WORK ARE FOR REFERENCE ONLY.

PLAN

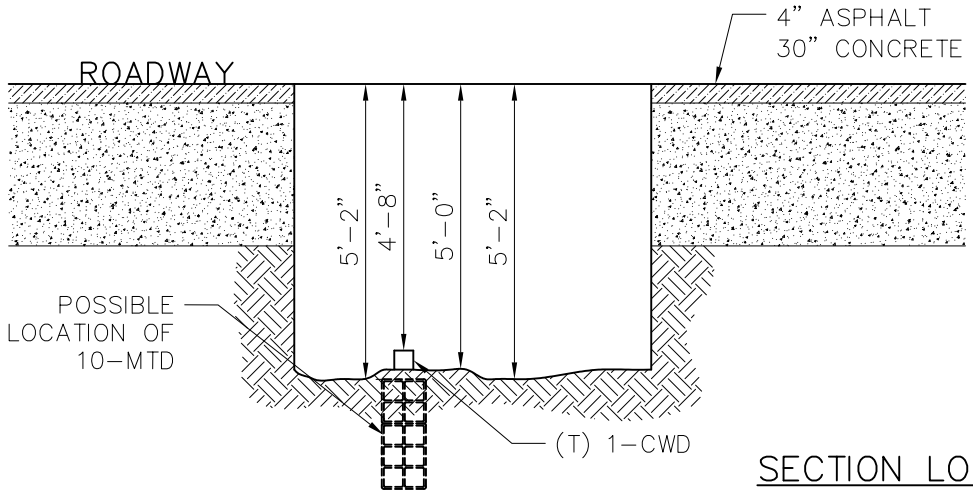

SECTION LOOKING NORTH

verizon

JOB NO.: QED1063AC

JOB: INSTALLATION OF DISTRIBUTION WATER MAINS BOROUGH OF QUEENS

TEST PIT #: 11

TP DATE: 10/10/24

INSPECTOR: LM

LOCATION: E/S OF FARMERS BOULEVARD, INTERSECTION OF 112TH AVENUE

PURPOSE: LOCATE EXISTING UNDERGROUND FACILITIES

DIMENSION: 6'-4"X5'-3"X4'-4" VOLUME: 5.3 CY SHEET NO. 10 OF 11

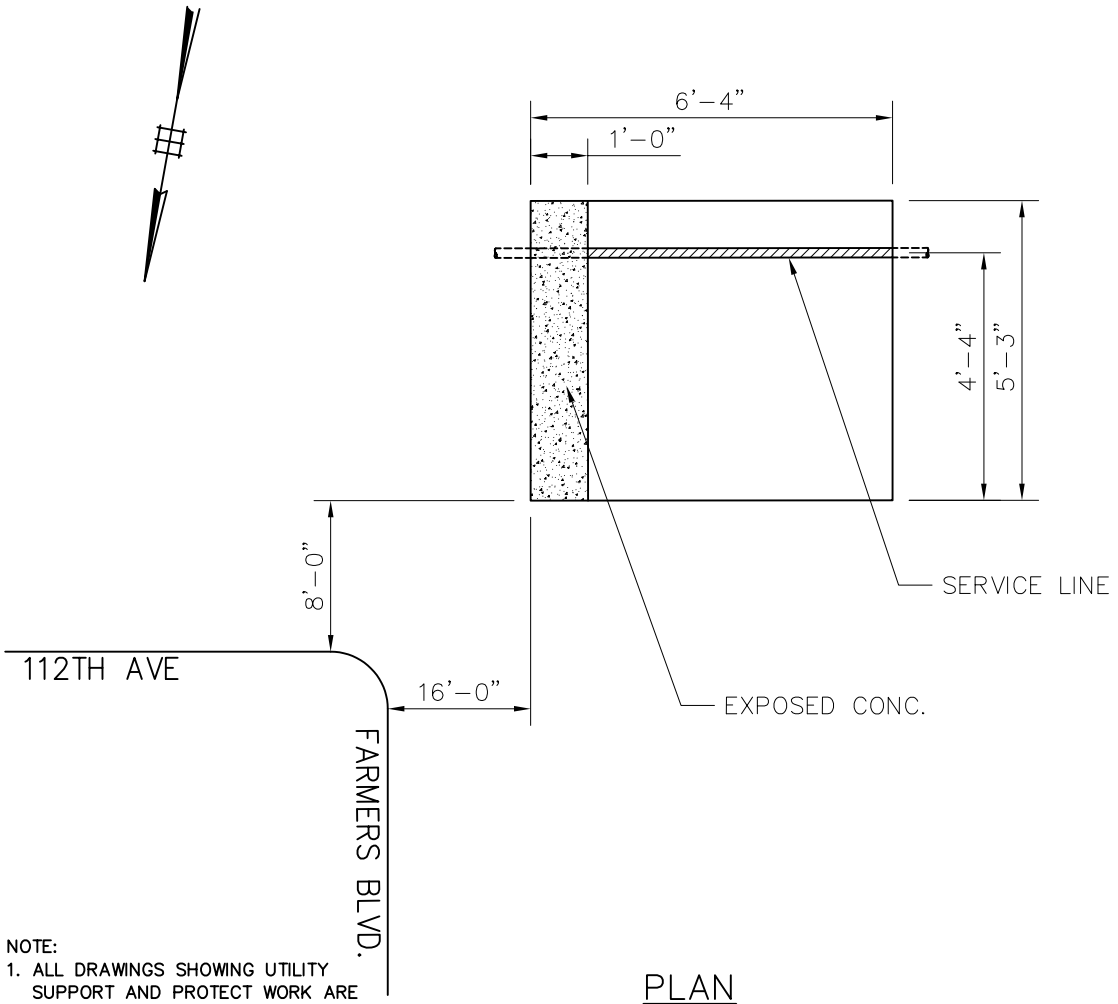

NOTE:
1. ALL DRAWINGS SHOWING UTILITY SUPPORT AND PROTECT WORK ARE FOR REFERENCE ONLY.

PLAN

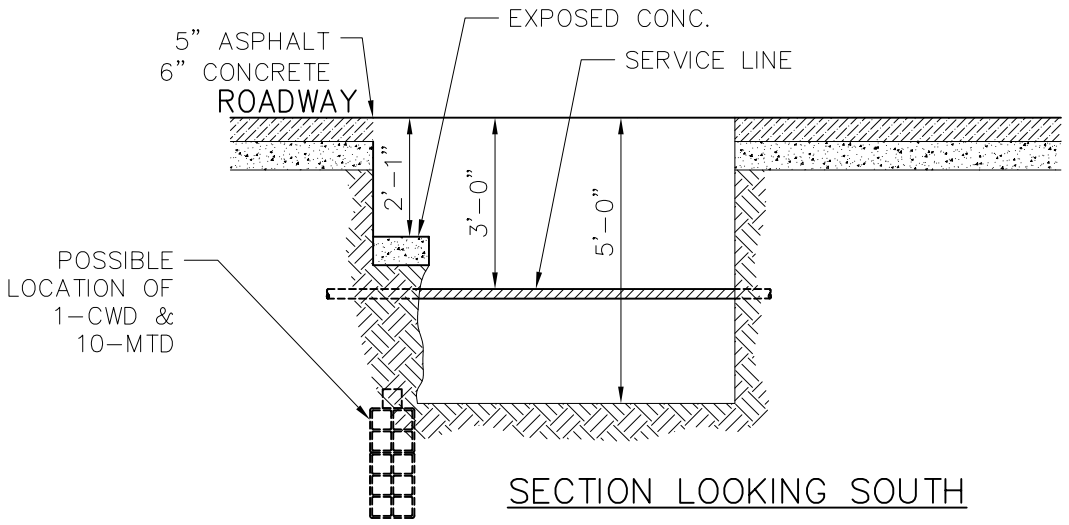

SECTION LOOKING SOUTH

verizon

JOB NO.: QED1063AC

JOB: INSTALLATION OF DISTRIBUTION WATER MAINS BOROUGH OF QUEENS

TEST PIT #: 12

TP DATE: 10/10/24

INSPECTOR: LM

LOCATION: E/S OF FARMERS BOULEVARD, INTERSECTION OF 112TH ROAD

PURPOSE: LOCATE EXISTING UNDERGROUND FACILITIES

DIMENSION: 6'-6"X5'-0"X4'-0" VOLUME: 4.8 CY SHEET NO. 11 OF 11

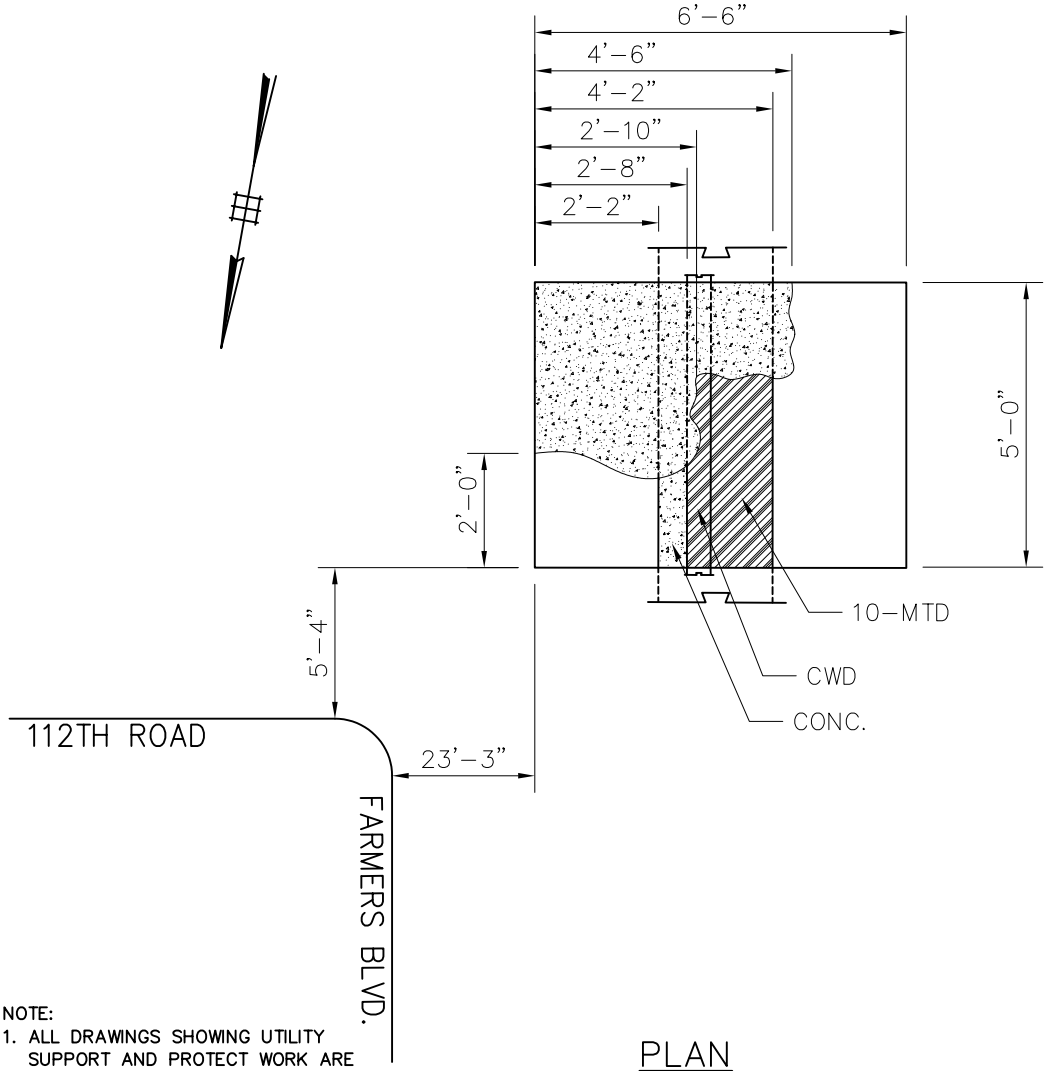

NOTE:
1. ALL DRAWINGS SHOWING UTILITY SUPPORT AND PROTECT WORK ARE FOR REFERENCE ONLY.

PLAN

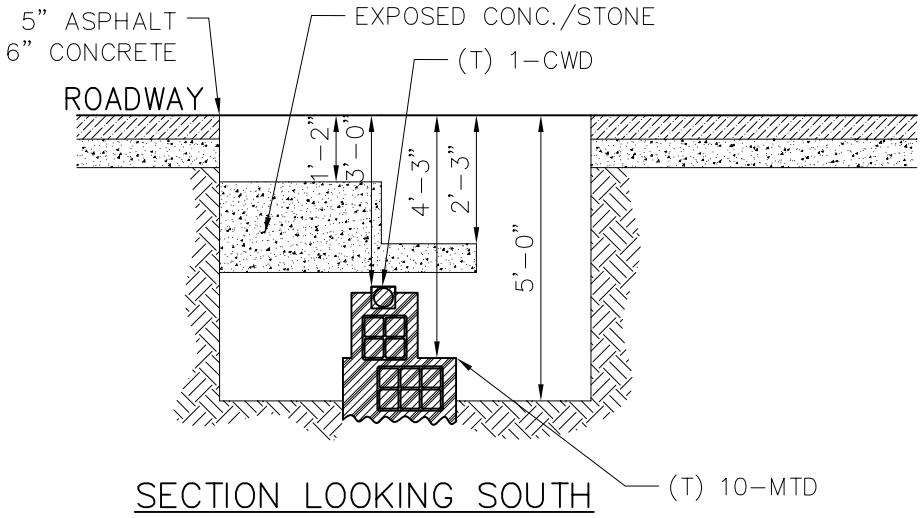

SECTION LOOKING SOUTH

EMPIRE CITY SUBWAY CO/LTD
A Verizon Company

JOB: INSTALLATION OF DISTR. WATER MAINS
BOROUGH OF THE BRONX
JOB NO: QED1063AC

PREPARED BY: LM
CHECKED BY: SM

SHEET NO. 1 OF 2
DATE: 11/21/2024
DATE: 11/21/2024
SHT#: C-2 REF: –

LOCATION: N/S OF BUSSING AVENUE, E/O EDSON AVENUE

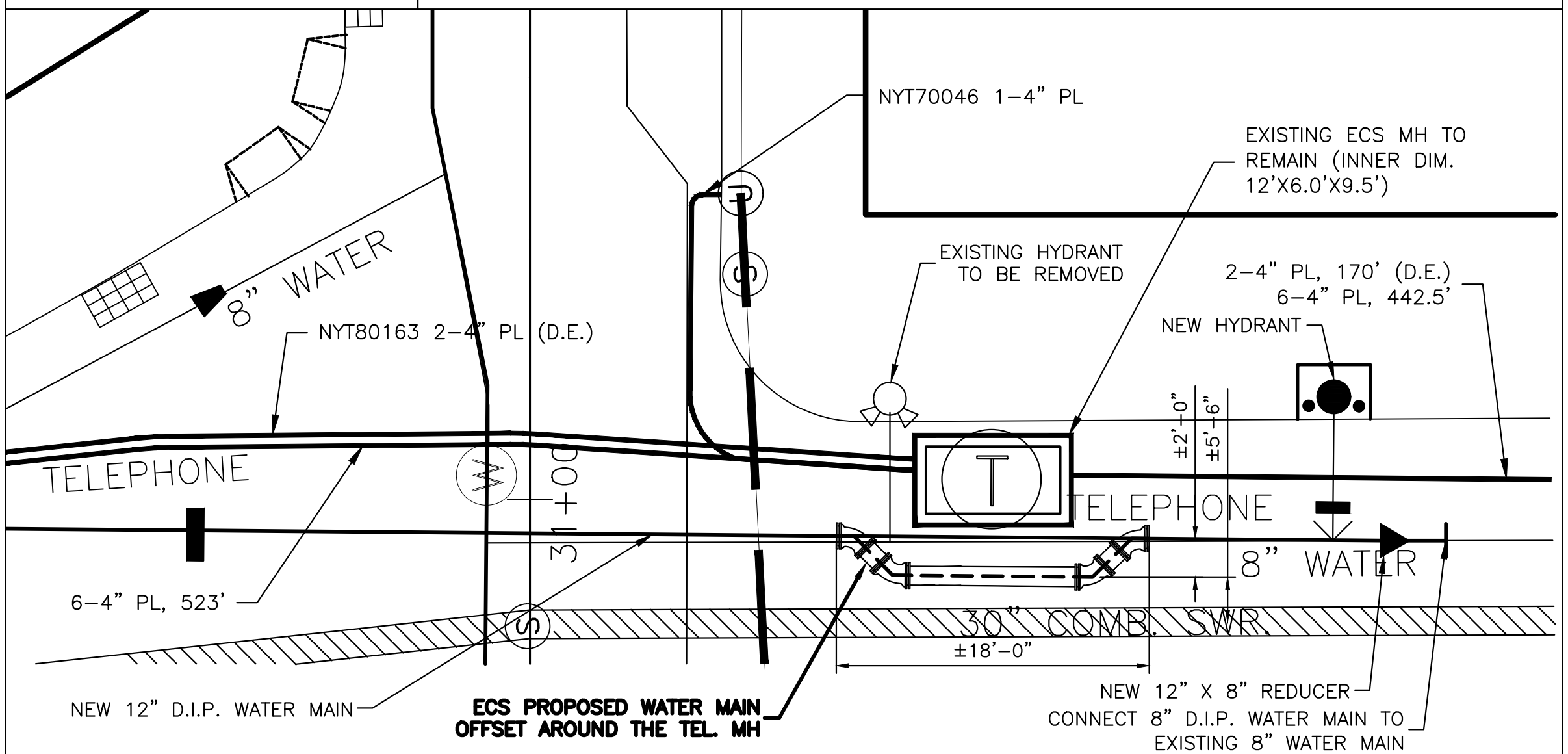

NOTE:

1. ALL DRAWINGS SHOWING UTILITY SUPPORT AND PROTECTION WORK ARE FOR REFERENCE ONLY.

ECS PROPOSED 12" WATER MAIN OFFSET – PLAN

N.T.S.

SK#1

JB-160

PROJECT ID: QED1063AC

SHEET NO. 2 OF 2

JOB: INSTALLATION OF DISTR. WATER MAINS
BOROUGH OF QUEENS

JOB NO: QED1063AC

PREPARED BY: LM
CHECKED BY: SM

DATE: 11/21/2024
DATE: 11/21/2024
SHT#: D-1 REF: –

LOCATION: N/S OF MERRICK BOULEVARD, E/O SUNBURY ROAD

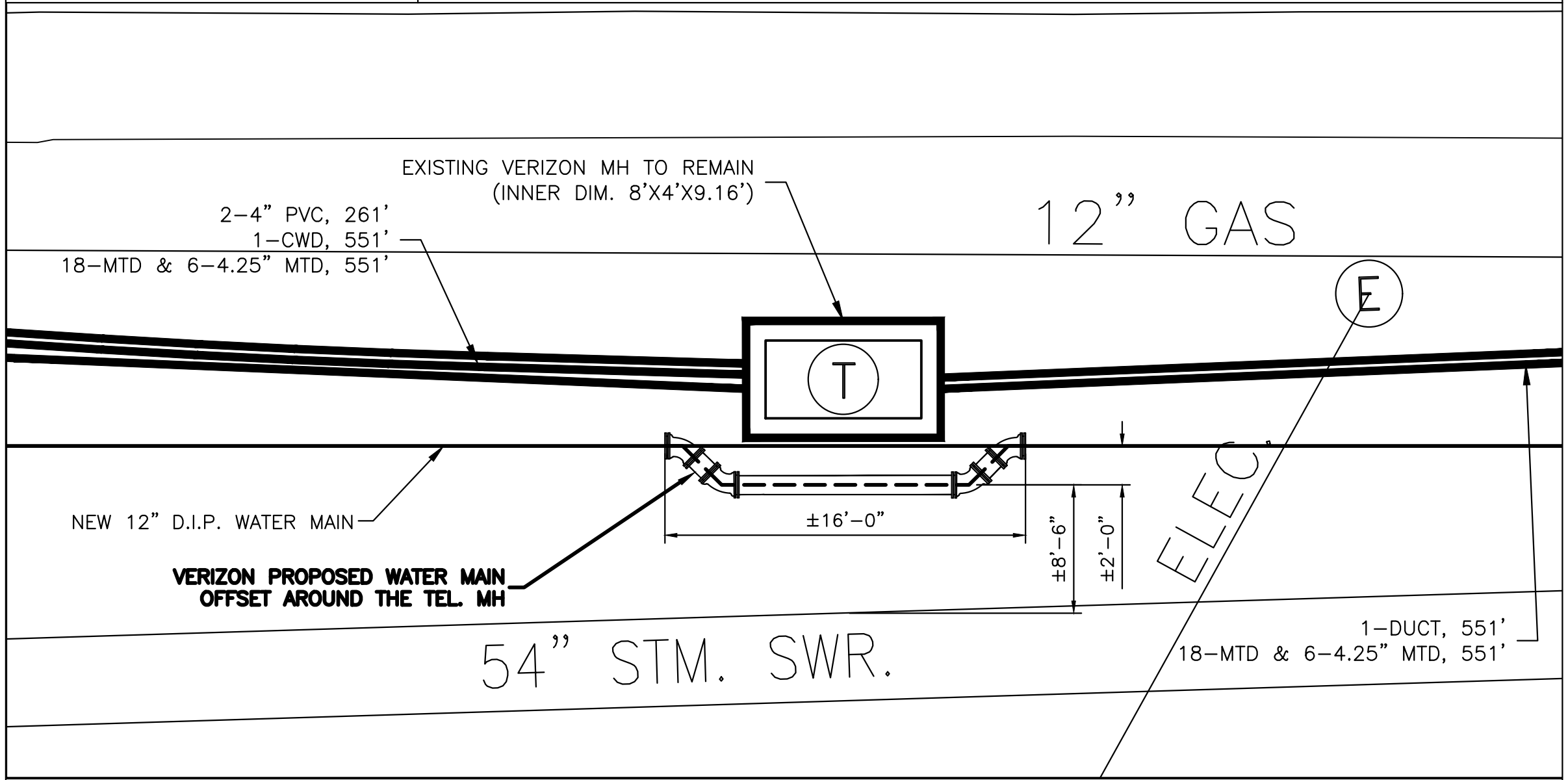

NOTE:

1. ALL DRAWINGS SHOWING UTILITY SUPPORT AND PROTECTION WORK ARE FOR REFERENCE ONLY.

VERIZON PROPOSED 12" WATER MAIN OFFSET – PLAN

N.T.S.

SK#2

JB-161

PROJECT ID: QED1063AC

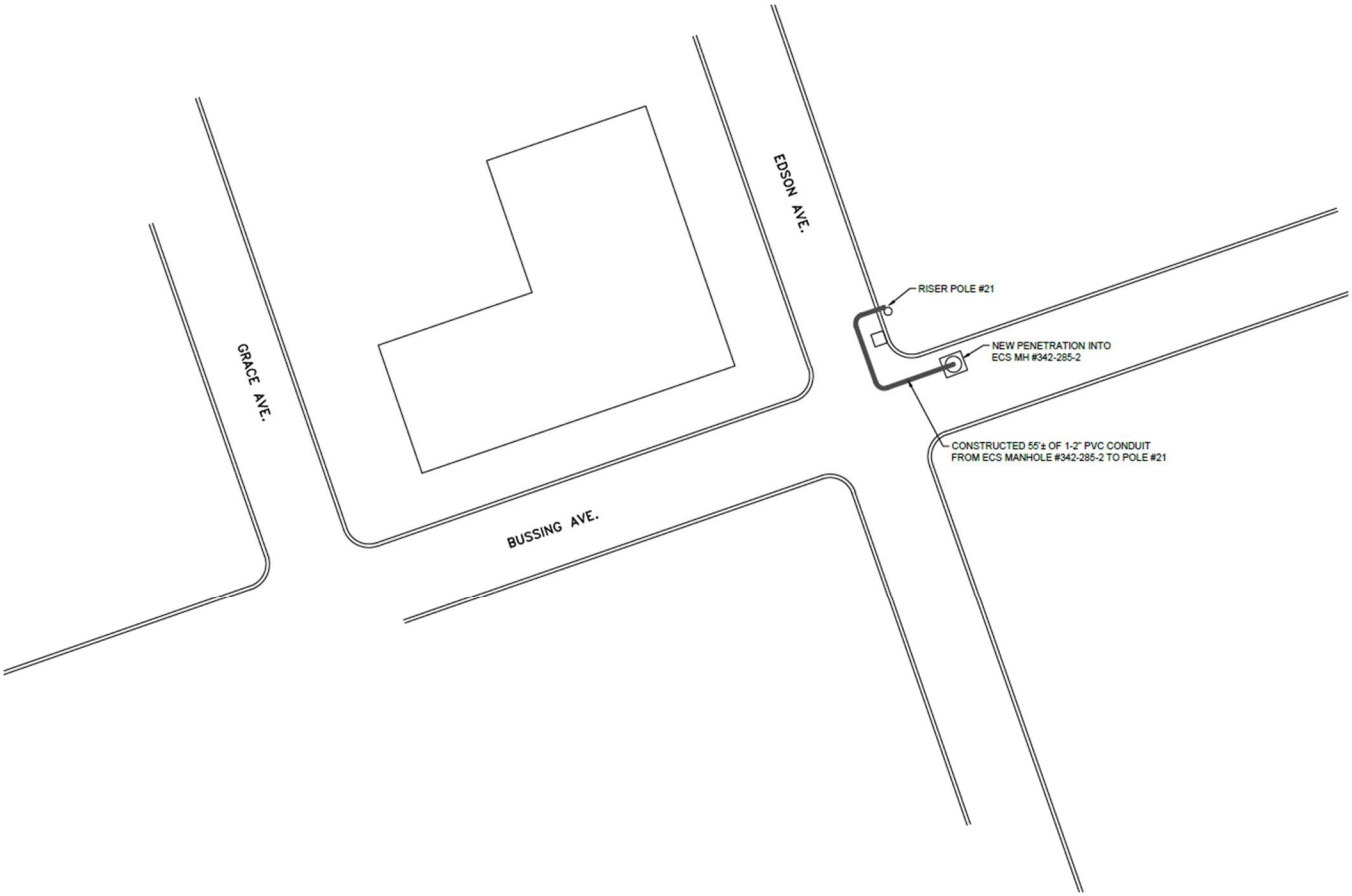

The pathway to possible.
CrownCastle.com

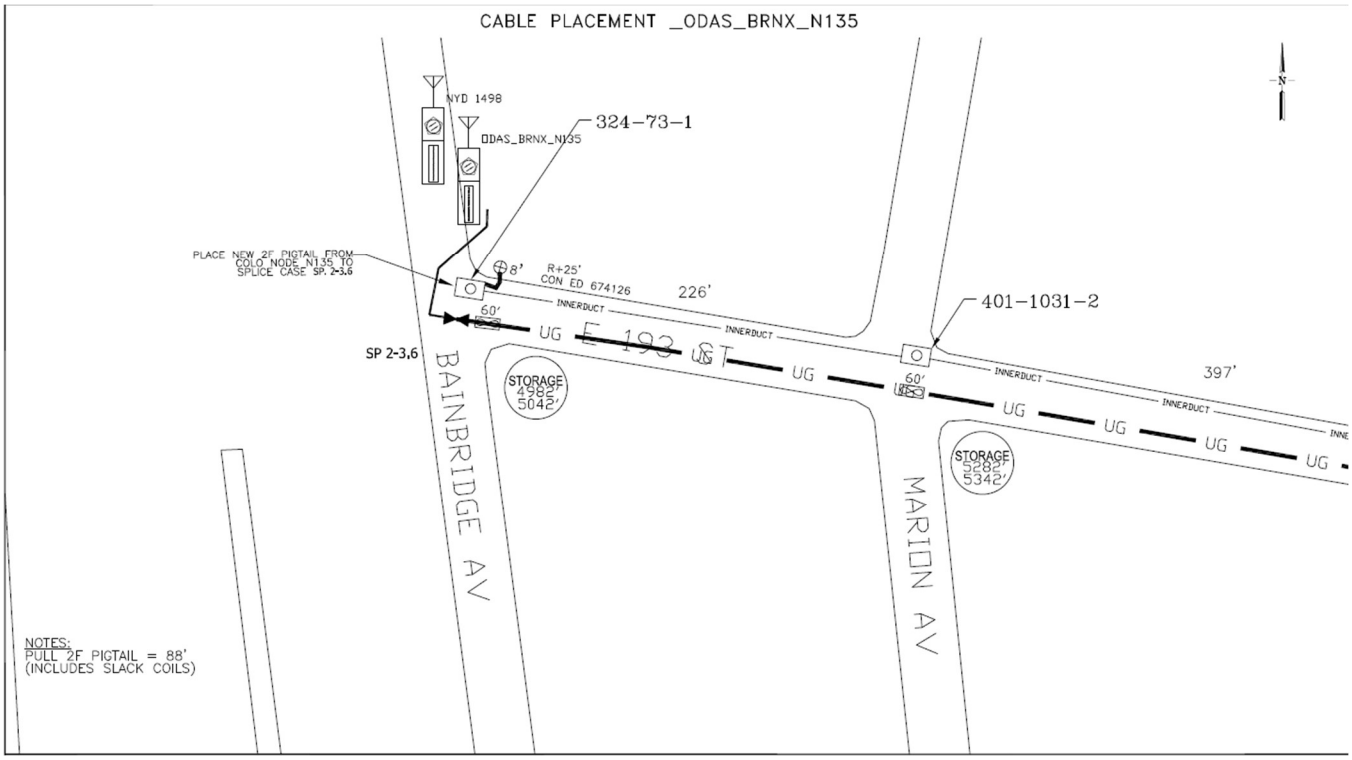

The pathway to possible.
CrownCastle.com

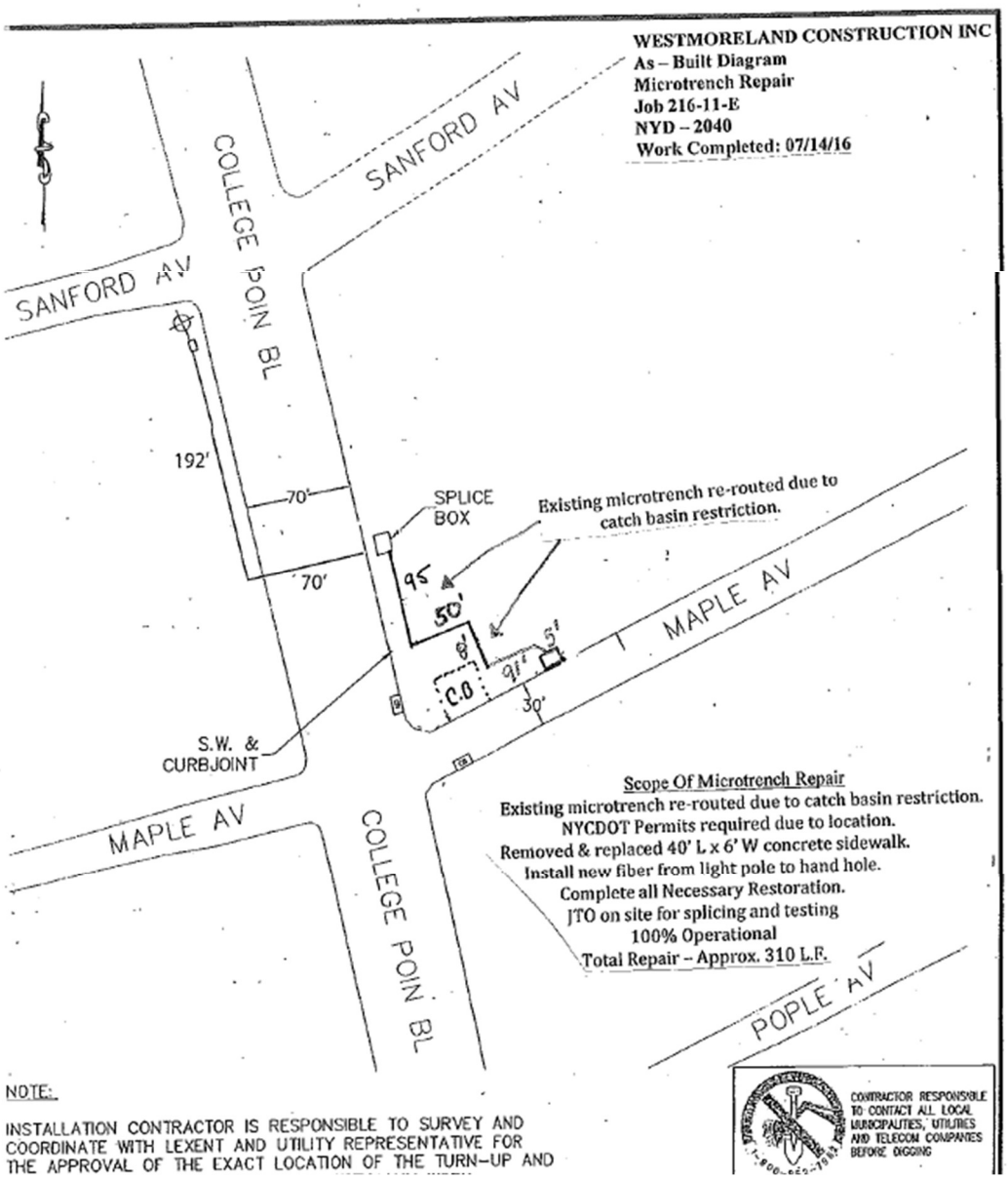
WESTMORELAND CONSTRUCTION INC
As – Built Diagram
Microtrench Repair
Job 216-11-E
NYD – 2040
Work Completed: 07/14/16
SANFORD AV
COLLEGE POIN BL
SANFORD AV
192'
70'
70'
SPLICE BOX
Existing microtrench re-routed due to catch basin restriction.
95
50'
8'
5'
91'
C.O
30'
MAPLE AV
S.W. & CURBJOINT
MAPLE AV
COLLEGE POIN BL
POPLE AV
Scope Of Microtrench Repair
Existing microtrench re-routed due to catch basin restriction.
NYCDOT Permits required due to location.
Removed & replaced 40' L x 6' W concrete sidewalk.
Install new fiber from light pole to hand hole.
Complete all Necessary Restoration.
JTO on site for splicing and testing
100% Operational
Total Repair – Approx. 310 L.F.
NOTE:
INSTALLATION CONTRACTOR IS RESPONSIBLE TO SURVEY AND COORDINATE WITH LEXENT AND UTILITY REPRESENTATIVE FOR THE APPROVAL OF THE EXACT LOCATION OF THE TURN-UP AND
CONTRACTOR RESPONSIBLE TO CONTACT ALL LOCAL MUNICIPALITIES, UTILITIES AND TELECOM COMPANIES BEFORE DIGGING

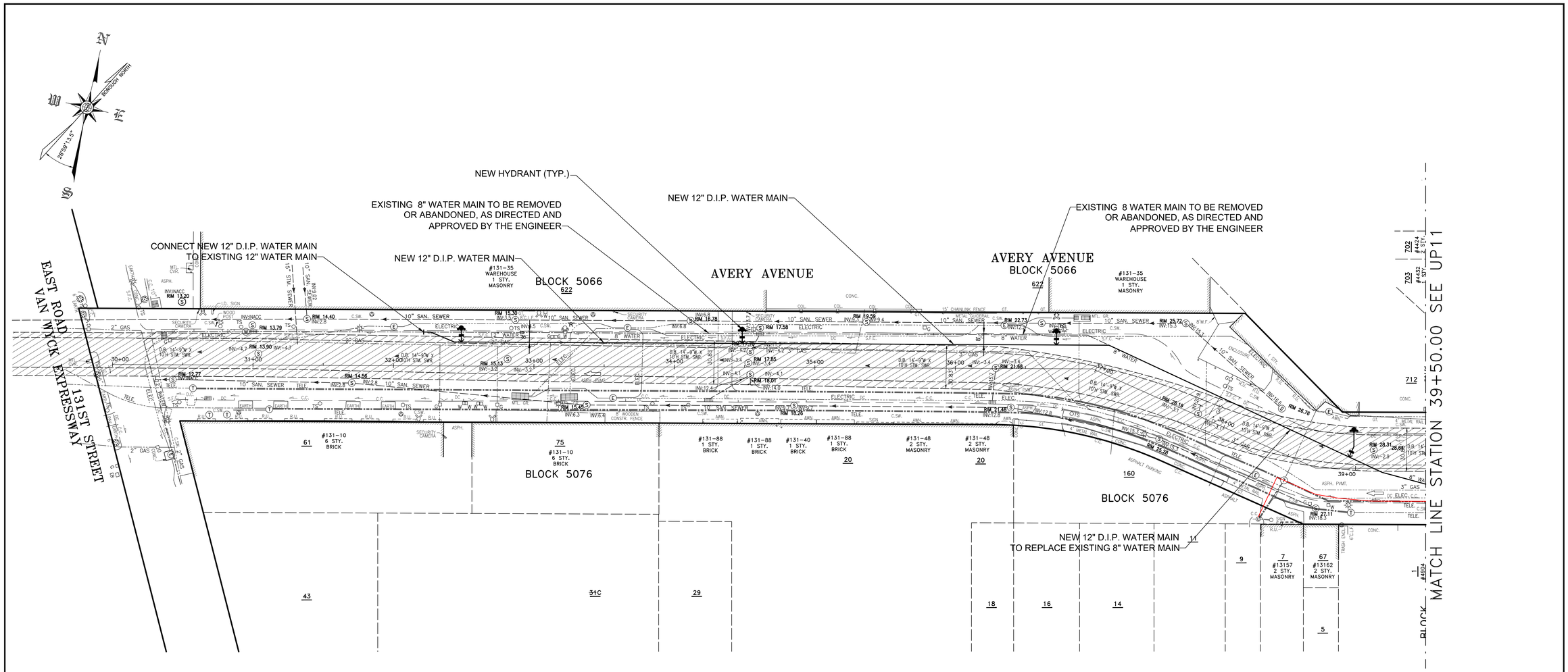

NOTE:
1. ALL COORDINATES SHOWN ARE IN THE BOROUGH OF QUEENS COORDINATE SYSTEM.
2. ALL COORDINATES SHOWN ARE BASED UPON THE NEW YORK STATE PLANE COORDINATE SYSTEM, NAD 83 (2011) EPOCH 2010.0 LONG ISLAND ZONE.
3. ALL COORDINATES SHOWN ARE IN ASSUMED COORDINATE SYSTEM.
4. THE HORIZONTAL DATUM IS REFERENCED TO BOROUGH OF QUEENS COORDINATE SYSTEM.
5. ALL ELEVATIONS SHOWN ON THIS SURVEY REFER TO THE NORTH AMERICAN VERTICAL DATUM OF 1988 "NAVD88". TO CONVERT THIS DATUM TO QUEENS HIGHWAY DATUM, SUBTRACT 1.625 FEET FROM EACH ELEVATION.
6. THE CONTRACTOR SHALL VERIFY THE RE-CONNECTION POINTS IN THE FIELD. THE COST OF THIS WORK SHALL BE DEEMED INCLUDED IN THE UNIT PRICES BID FOR LAYING THE VARIOUS WATER MAINS. NO SEPARATE OR ADDITIONAL PAYMENT SHALL BE MADE FOR THIS WORK.
7. THE CONTRACTOR MUST SUPPORT AND PROTECT ALL NYCDOT TRAFFIC SIGNAL SYSTEMS, UNDERGROUND CABLES, AND FACILITIES DURING EXCAVATION AND INSTALLATION OF NEW WATER MAINS.

NO INTERFERENCE

PLAN

The pathway to possible.
CrownCastle.com

NO.	DATE	DESCRIPTIONS	BY	APPR'D

REVISIONS

PRG PROJECT RESOURCES GROUP

altice

t of
on

DESIGNED M. FLORES-VAZQUEZ
DRAWN M. FLORES-VAZQUEZ
CHECKED C. WILKERSON

SCALE AS SHOWN

CADD FILE LOCATION E.DWG

LORENZO WILKERSON, P.E.
ENGINEER-IN-CHARGE

DIRECTOR

DIVISION OF INFRASTRUCTURE
BUREAU OF DESIGN

LOCATION E - 1
UTILITY PLAN

INSTALLATION OF DISTRIBUTION WATER MAINS
BOROUGH OF QUEENS

PROJECT ID:QED1063AC | DATE: 09/12/2024 | SHEET 28 OF 27 | UP10 / UP18

PROJECT ID: QED1063AC

IN-HOUSE DESIGN

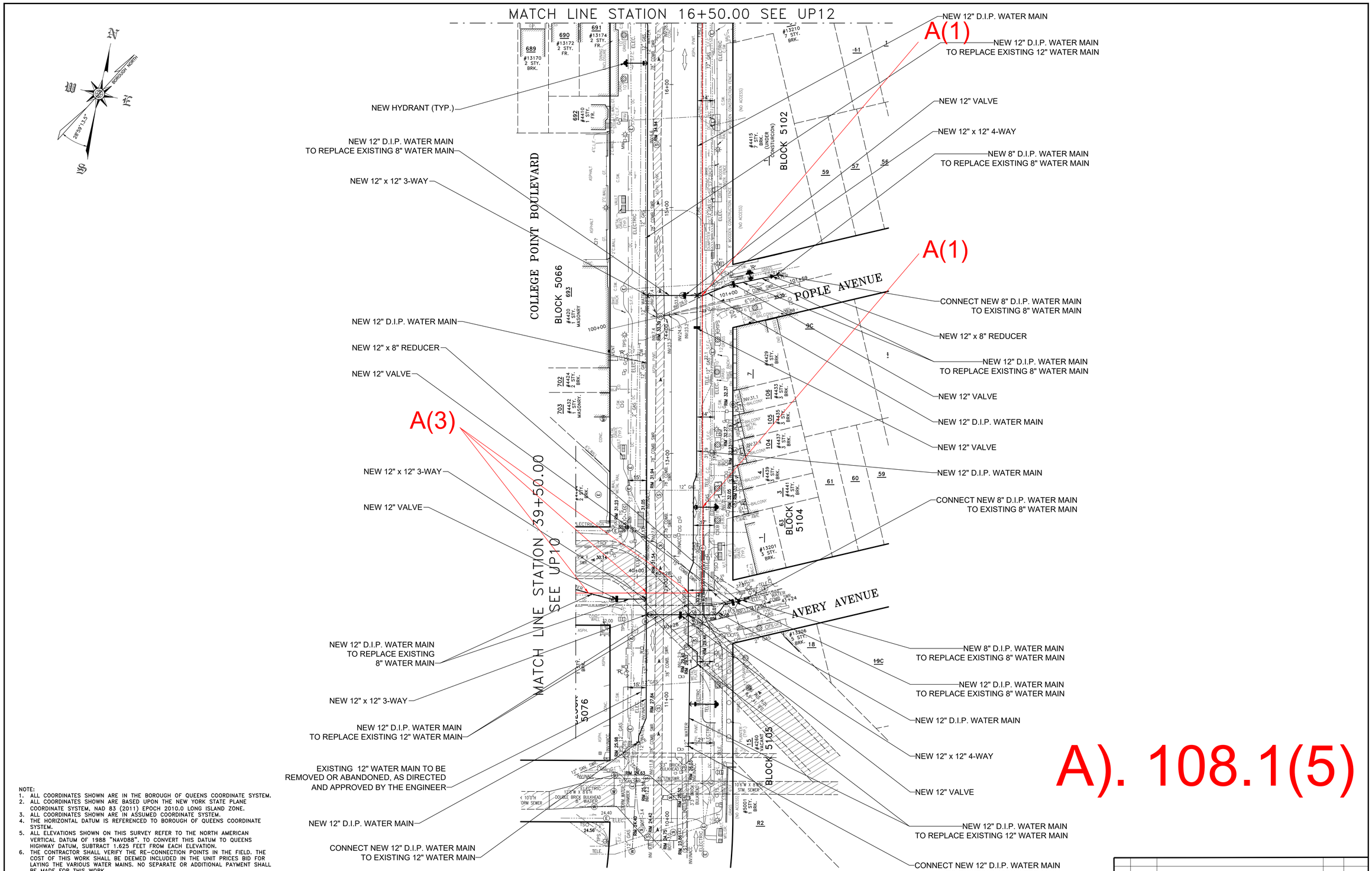

PLAN

SCALE: 1" = 30'

NOTE:
1. ALL COORDINATES SHOWN ARE IN THE BOROUGH OF QUEENS COORDINATE SYSTEM.
2. ALL COORDINATES SHOWN ARE BASED UPON THE NEW YORK STATE PLANE COORDINATE SYSTEM, NAD 83 (2011) EPOCH 2010.0 LONG ISLAND ZONE.
3. ALL COORDINATES SHOWN ARE IN ASSUMED COORDINATE SYSTEM.
4. THE HORIZONTAL DATUM IS REFERENCED TO BOROUGH OF QUEENS COORDINATE SYSTEM.
5. ALL ELEVATIONS SHOWN ON THIS SURVEY REFER TO THE NORTH AMERICAN VERTICAL DATUM OF 1988 "NAVD88". TO CONVERT THIS DATUM TO QUEENS HIGHWAY DATUM, SUBTRACT 1.625 FEET FROM EACH ELEVATION.
6. THE CONTRACTOR SHALL VERIFY THE RE-CONNECTION POINTS IN THE FIELD. THE COST OF THIS WORK SHALL BE DEEMED INCLUDED IN THE UNIT PRICES BID FOR LAYING THE VARIOUS WATER MAINS. NO SEPARATE OR ADDITIONAL PAYMENT SHALL BE MADE FOR THIS WORK.
7. THE CONTRACTOR MUST SUPPORT AND PROTECT ALL NYCDOT TRAFFIC SIGNAL SYSTEMS, UNDERGROUND CABLES, AND FACILITIES DURING EXCAVATION AND INSTALLATION OF NEW WATER MAINS.

NO.	DATE	DESCRIPTIONS	BY	APPR'D

REVISIONS

PRG PROJECT RESOURCES GROUP

altice

DESIGNED M. FLORES-VAZQUEZ
DRAWN M. FLORES-VAZQUEZ
CHECKED C. WILKERSON

SCALE AS SHOWN

CADD FILE LOCATION E.DWG

CORENZO WILKERSON, P.E.
ENGINEER-IN-CHARGE

DIRECTOR

CITY OF NEW YORK
DEPARTMENT OF DESIGN + CONSTRUCTION
DIVISION OF INFRASTRUCTURE
BUREAU OF DESIGN

LOCATION E - 2
UTILITY PLAN

INSTALLATION OF DISTRIBUTION WATER MAINS
BOROUGH OF QUEENS

PROJECT ID:QED1063AC | DATE: 09/12/2024 | SHEET 29 OF 27 | UP11 UP18

PROJECT ID:QED1063AC

IN-HOUSE DESIGN

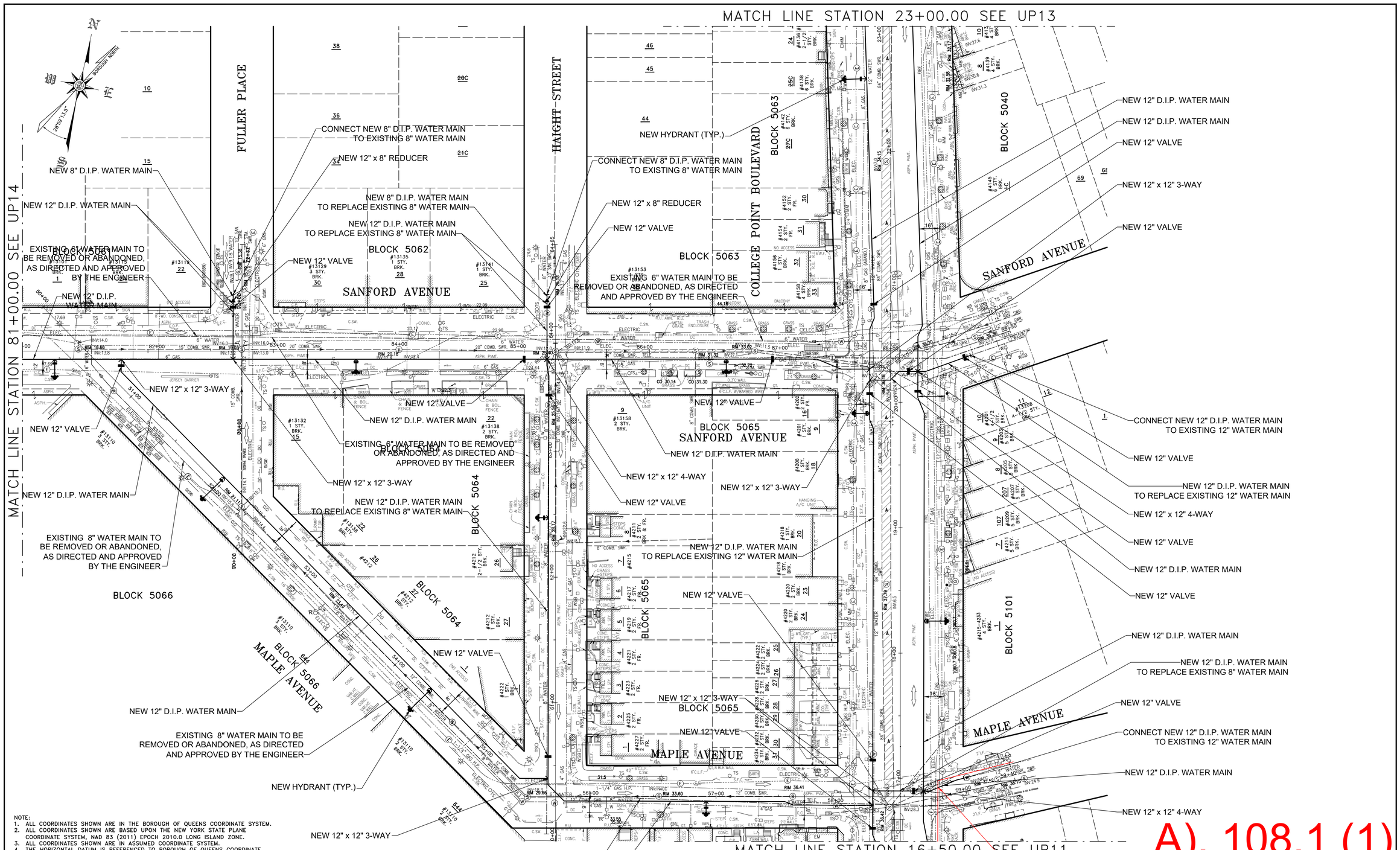

NOTE:
1. ALL COORDINATES SHOWN ARE IN THE BOROUGH OF QUEENS COORDINATE SYSTEM.
2. ALL COORDINATES SHOWN ARE BASED UPON THE NEW YORK STATE PLANE COORDINATE SYSTEM, NAD 83 (2011) EPOCH 2010.0 LONG ISLAND ZONE.
3. ALL COORDINATES SHOWN ARE IN ASSUMED COORDINATE SYSTEM.
4. THE HORIZONTAL DATUM IS REFERENCED TO BOROUGH OF QUEENS COORDINATE SYSTEM.
5. ALL ELEVATIONS SHOWN ON THIS SURVEY REFER TO THE NORTH AMERICAN VERTICAL DATUM OF 1988 "NAVD88". TO CONVERT THIS DATUM TO QUEENS HIGHWAY DATUM, SUBTRACT 1.625 FEET FROM EACH ELEVATION.
6. THE CONTRACTOR SHALL VERIFY THE RE-CONNECTION POINTS IN THE FIELD. THE COST OF THIS WORK SHALL BE DEEMED INCLUDED IN THE UNIT PRICES BID FOR LAYING THE VARIOUS WATER MAINS. NO SEPARATE OR ADDITIONAL PAYMENT SHALL BE MADE FOR THIS WORK.
7. THE CONTRACTOR MUST SUPPORT AND PROTECT ALL NYCDOT TRAFFIC SIGNAL SYSTEMS, UNDERGROUND CABLES, AND FACILITIES DURING EXCAVATION AND INSTALLATION OF NEW WATER MAINS.

PLAN
SCALE: 1" = 30'

NO.	DATE	DESCRIPTIONS	BY	APPR'D
		REVISIONS		

PRG PROJECT RESOURCES GROUP

altice

DESIGNED M. FLORES-VAZQUEZ
DRAWN M. FLORES-VAZQUEZ
CHECKED C. WILKERSON

SCALE AS SHOWN
CADD FILE LOCATION E.DWG

LORENZO WILKERSON, P.E.
ENGINEER-IN-CHARGE

DIRECTOR

CITY OF NEW YORK
DEPARTMENT OF DESIGN + CONSTRUCTION
DIVISION OF INFRASTRUCTURE
BUREAU OF DESIGN

LOCATION E - 3
UTILITY PLAN

INSTALLATION OF DISTRIBUTION WATER MAINS
BOROUGH OF QUEENS

PROJECT ID:QED1063AC | DATE: 09/12/2024 | SHEET 30 OF 27 | UP12 / UP18

PROJECT ID: QED1063AC

IN-HOUSE DESIGN

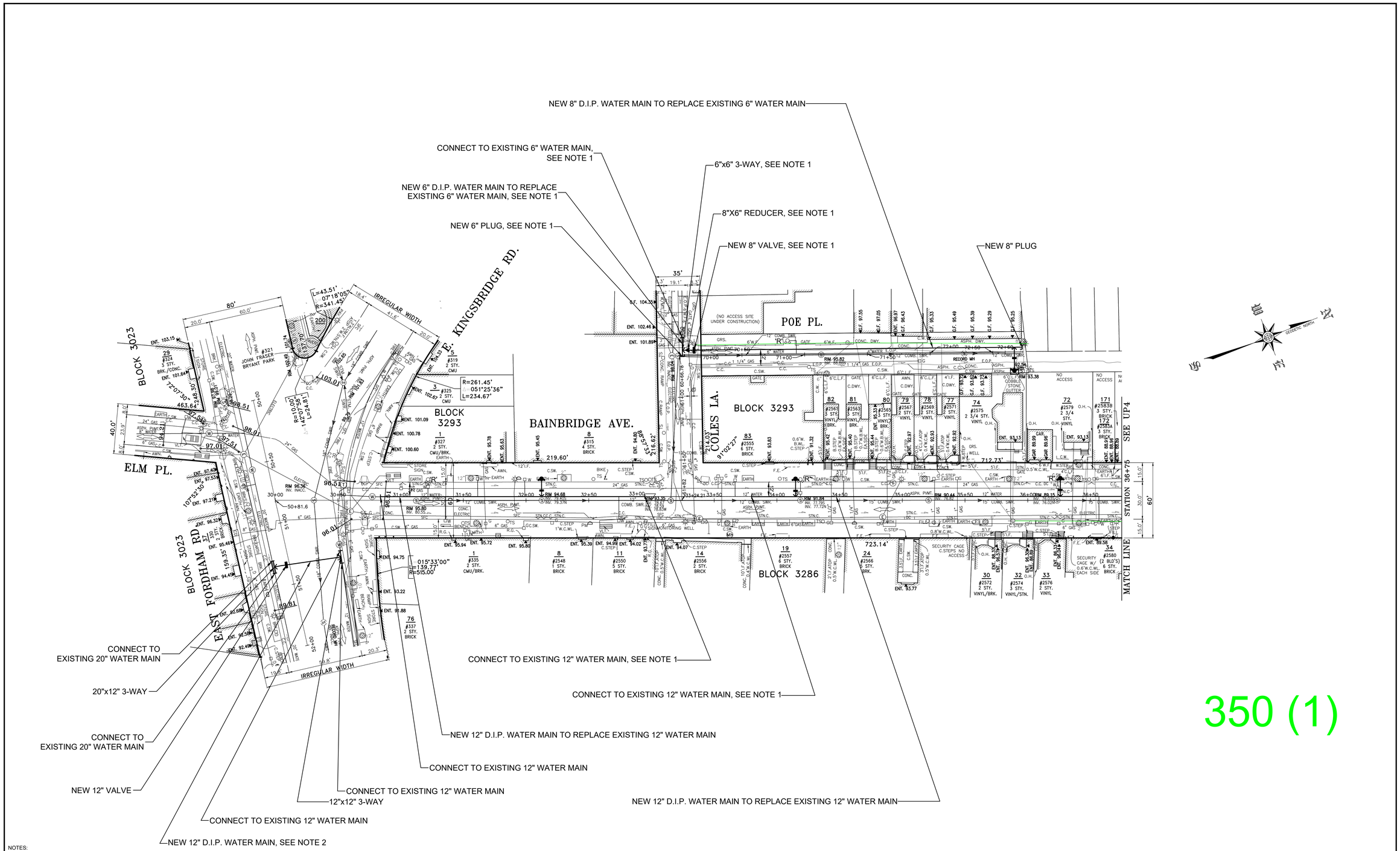

350 (1)

NOTES:

1. THE CONTRACTOR TO COORDINATE WITH PROJECT ID. HWD105-03 FOR WATER MAIN INSTALLATION.
2. THE CONTRACTOR MUST PERFORM TEST PITS TO ASCERTAIN THE EXISTENCE, NATURE, EXTENT AND LOCATION OF ABANDONED RAILROAD FACILITIES AND TROLLEY TRACKAGE ON EAST FORDHAM ROAD. THE CONTRACTOR TO REMOVE TRACKS IF ENCOUNTERED AND THE TRACKS ARE INTERFERING WITH PROPOSED WATER MAIN WORK.
3. ALL ELEVATIONS SHOWN ON THIS SURVEY REFER TO THE NORTH AMERICAN VERTICAL DATUM OF 1988 "NAVD88". TO CONVERT THIS DATUM TO BRONX HIGHWAY DATUM, SUBTRACT 1.508 FEET FROM EACH ELEVATION
4. ALL COORDINATES SHOWN ARE BASED UPON THE NEW YORK STATE PLANE COORDINATE SYSTEM, NAD 83 (2011) EPOCH 2010.0 LONG ISLAND ZONE
5. THE CONTRACTOR SHALL VERIFY THE RE-CONNECTION POINTS IN FIELD. THE COST OF THIS WORK SHALL BE DEEMED INCLUDED IN THE UNIT PRICES BID FOR LAYING THE VARIOUS WATER MAINS. NO SEPARATE OR ADDITIONAL PAYMENT SHALL BE MADE FOR THIS WORK.

PLAN

SCALE: 1" = 30'

NO.	DATE	DESCRIPTIONS	BY	APPR'D

REVISIONS

PRG PROJECT RESOURCES GROUP | altice

DESIGNED R. CHEN
DRAWN R. CHEN
CHECKED C. WILKERSON

SCALE AS SHOWN

CADD FILE LOCATION B.DWG

CORENZO WILKERSON, P.E.
ENGINEER-IN-CHARGE

DIRECTOR

CITY OF NEW YORK
DEPARTMENT OF DESIGN + CONSTRUCTION
DIVISION OF INFRASTRUCTURE
BUREAU OF DESIGN

LOCATION B - 1
UTILITY PLAN

INSTALLATION OF DISTRIBUTION WATER MAINS
BOROUGH OF THE BRONX

PROJECT ID:QED1063AC | DATE: 09/18/2024 | SHEET 21 OF 64 | UP3 / UP18

IN-HOUSE DESIGN

PROJECT ID: QED1063AC

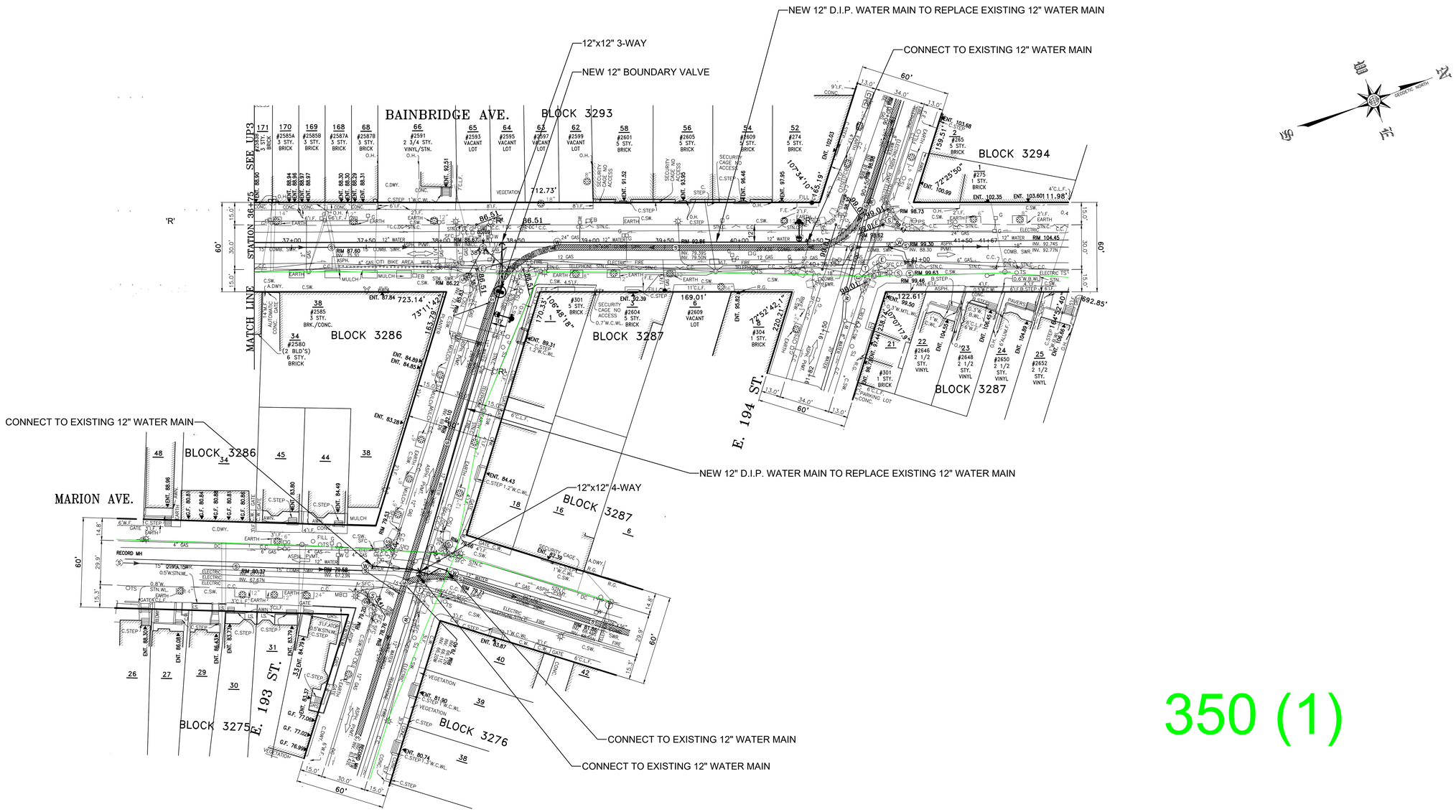

350 (1)

NOTES:

1. ALL ELEVATIONS SHOWN ON THIS SURVEY REFER TO THE NORTH AMERICAN VERTICAL DATUM OF 1988 "NAVD88". TO CONVERT THIS DATUM TO BRONX HIGHWAY DATUM, SUBTRACT 1.508 FEET FROM EACH ELEVATION.
2. ALL COORDINATES SHOWN ARE BASED UPON THE NEW YORK STATE PLANE COORDINATE SYSTEM, NAD 83 (2011) EPOCH 2010.0 LONG ISLAND ZONE.
3. THE CONTRACTOR MUST SUPPORT AND PROTECT ALL NYCDOT TRAFFIC SIGNAL SYSTEMS, UNDERGROUND CABLES AND FACILITIES DURING EXCAVATION AND INSTALLATION OF NEW WATER MAINS.
4. THE CONTRACTOR SHALL VERIFY THE RE-CONNECTION POINTS IN FIELD. THE COST OF THIS WORK SHALL BE DEEMED INCLUDED IN THE UNIT PRICES BID FOR LAYING THE VARIOUS WATER MAINS. NO SEPARATE OR ADDITIONAL PAYMENT SHALL BE MADE FOR THIS WORK.

PLAN

SCALE: 1" = 30'

NO.	DATE	DESCRIPTIONS	BY	APPR'D
		REVISIONS		

PRG PROJECT RESOURCES GROUP

altice

DESIGNED R. CHEN
DRAWN R. CHEN
CHECKED C. WILKERSON

SCALE AS SHOWN

CADD FILE LOCATION B.DWG

CORENZO WILKERSON, P.E.
ENGINEER-IN-CHARGE

DIRECTOR

CITY OF NEW YORK
DEPARTMENT OF DESIGN + CONSTRUCTION
DIVISION OF INFRASTRUCTURE
BUREAU OF DESIGN

LOCATION B - 2
UTILITY PLAN

INSTALLATION OF DISTRIBUTION WATER MAINS
BOROUGH OF THE BRONX

PROJECT ID:QED1063AC | DATE: 09/18/2024 | SHEET 22 OF 64 | UP4 / UP18

PROJECT ID: QED1063AC

IN-HOUSE DESIGN

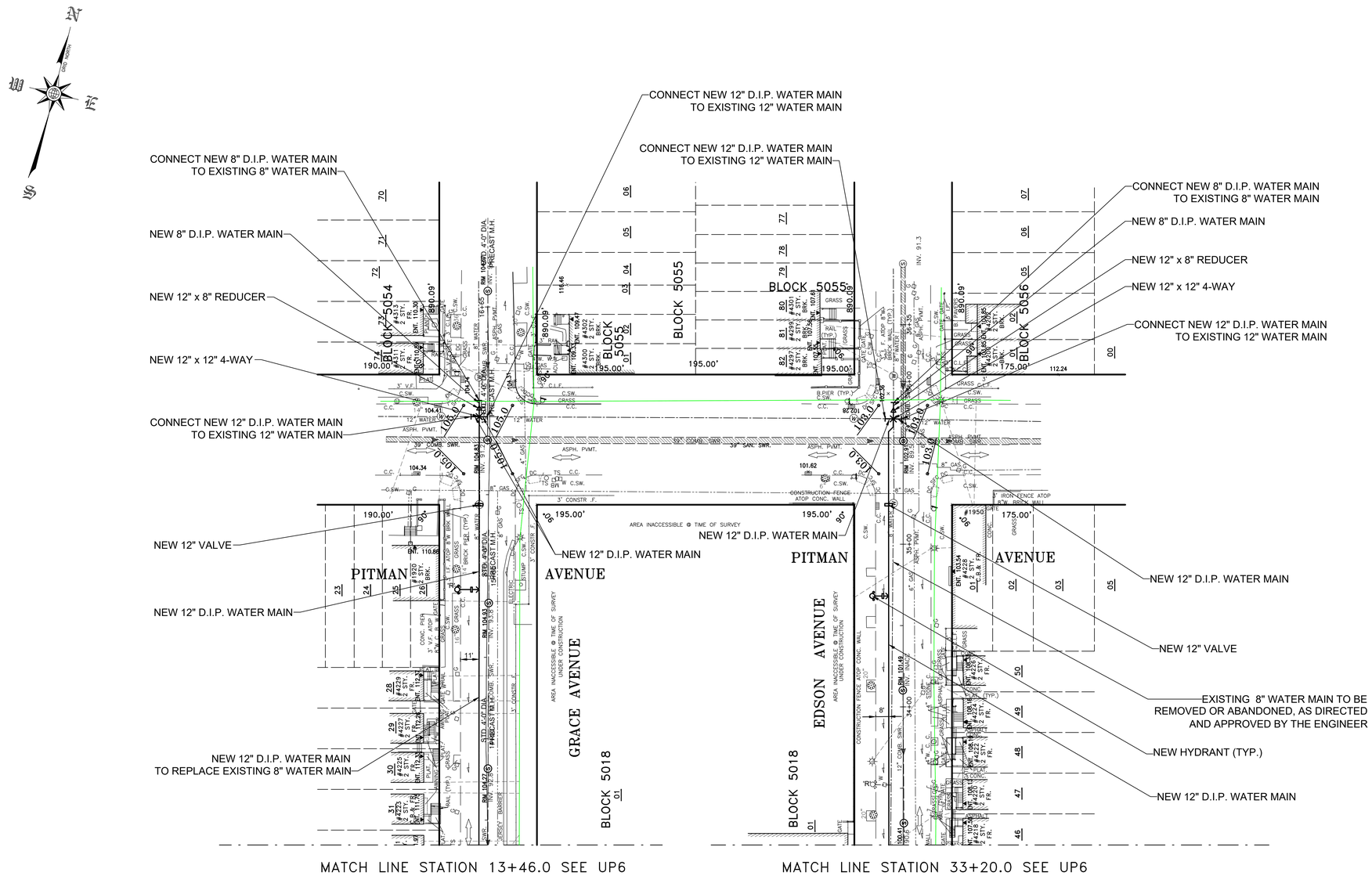

350 (1)

NOTE:
1. ALL ELEVATIONS SHOWN ON THIS SURVEY REFER TO THE NORTH AMERICAN VERTICAL DATUM OF 1988 "NAVD88". TO CONVERT THIS DATUM TO BRONX HIGHWAY DATUM, SUBTRACT 1.508 FEET FROM EACH ELEVATION.
2. ALL COORDINATES ARE SHOWN IN THE BOROUGH OF THE BRONX COORDINATE SYSTEM.
3. THE CONTRACTOR SHALL VERIFY THE RE-CONNECTION POINTS IN THE FIELD. THE COST OF THIS WORK SHALL BE DEEMED INCLUDED IN THE UNIT PRICES BID FOR LAYING THE VARIOUS WATER MAINS. NO SEPARATE OR ADDITIONAL PAYMENT SHALL BE MADE FOR THIS WORK.
4. THE CONTRACTOR MUST SUPPORT AND PROTECT ALL NYCDOT TRAFFIC SIGNAL SYSTEMS, UNDERGROUND CABLES, AND FACILITIES DURING EXCAVATION AND INSTALLATION OF NEW WATER MAINS.

PLAN
SCALE: 1" = 30'

NO.	DATE	DESCRIPTIONS	BY	APPR'D

REVISIONS

PRG PROJECT RESOURCES GROUP | altice | t of on

DESIGNED M. FLORES-VAZQUEZ
DRAWN M. FLORES-VAZQUEZ
CHECKED C. WILKERSON

SCALE AS SHOWN
CADD FILE LOCATION C.DWG

CORENZO WILKERSON, P.E.
ENGINEER-IN-CHARGE

DIRECTOR

CITY OF NEW YORK
DEPARTMENT OF DESIGN + CONSTRUCTION
DIVISION OF INFRASTRUCTURE
BUREAU OF DESIGN

LOCATION C - 1
UTILITY PLAN

INSTALLATION OF DISTRIBUTION WATER MAINS
BOROUGH OF THE BRONX

PROJECT ID:QED1063AC | DATE: 09/12/2024 | SHEET 23 OF 27 | UP5 / UP18

IN-HOUSE DESIGN

PROJECT ID: QED1063AC

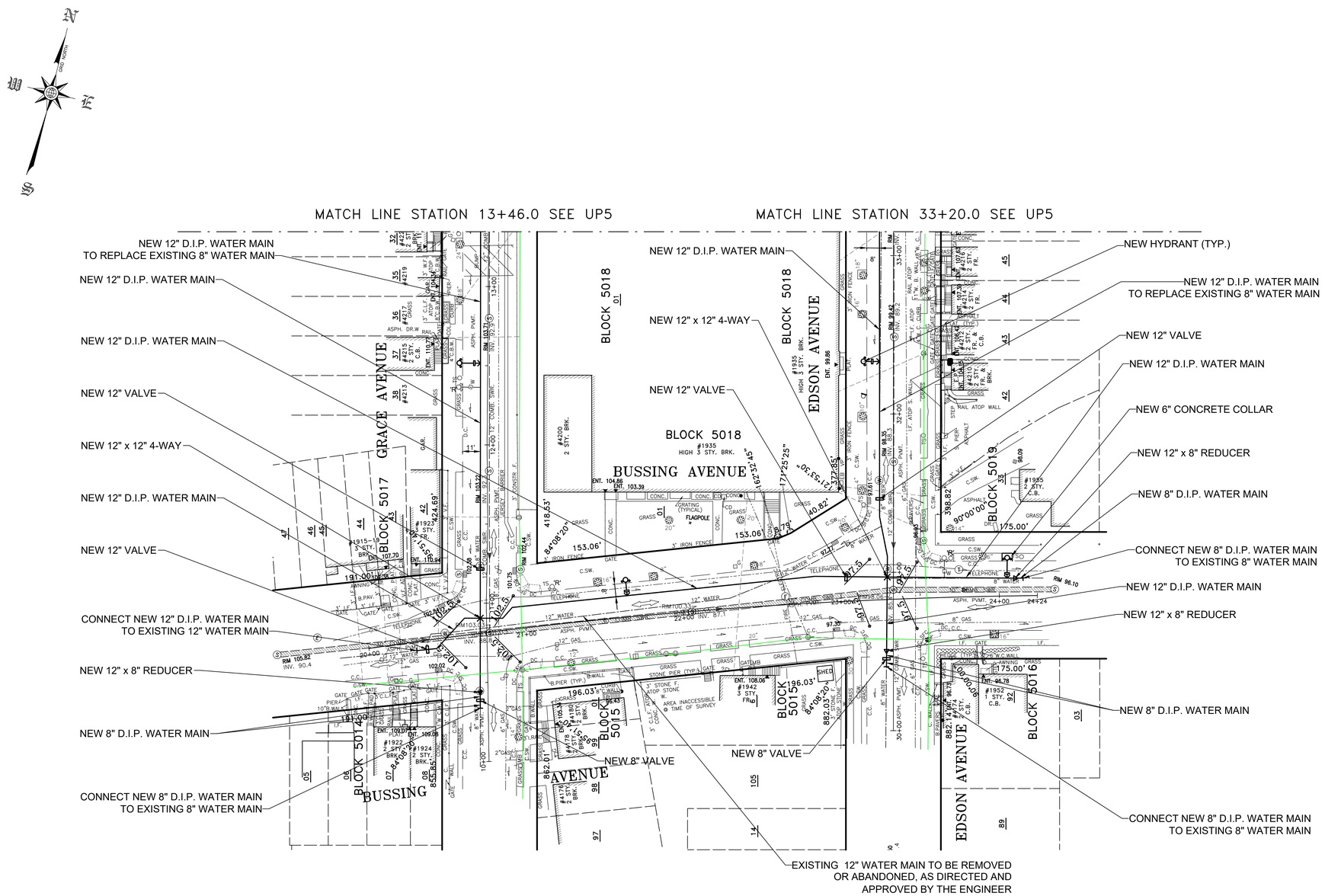

350 (1)

NOTE:
1. ALL ELEVATIONS SHOWN ON THIS SURVEY REFER TO THE NORTH AMERICAN VERTICAL DATUM OF 1988 "NAVD88". TO CONVERT THIS DATUM TO BRONX HIGHWAY DATUM, SUBTRACT 1.508 FEET FROM EACH ELEVATION.
2. ALL COORDINATES ARE SHOWN IN THE BOROUGH OF THE BRONX COORDINATE SYSTEM.
3. THE CONTRACTOR SHALL VERIFY THE RE-CONNECTION POINTS IN THE FIELD. THE COST OF THIS WORK SHALL BE DEEMED INCLUDED IN THE UNIT PRICES BID FOR LAYING THE VARIOUS WATER MAINS. NO SEPARATE OR ADDITIONAL PAYMENT SHALL BE MADE FOR THIS WORK.
4. THE CONTRACTOR MUST SUPPORT AND PROTECT ALL NYCDOT TRAFFIC SIGNAL SYSTEMS, UNDERGROUND CABLES, AND FACILITIES DURING EXCAVATION AND INSTALLATION OF NEW WATER MAINS.

PLAN

SCALE: 1" = 30'

NO.	DATE	DESCRIPTIONS	BY	APPR'D

REVISIONS

PRG PROJECT RESOURCES GROUP | altice | t of on

DESIGNED M. FLORES-VAZQUEZ
DRAWN M. FLORES-VAZQUEZ
CHECKED C. WILKERSON

SCALE AS SHOWN

CADD FILE LOCATION C.DWG

CORENZO WILKERSON, P.E.
ENGINEER-IN-CHARGE

DIRECTOR

CITY OF NEW YORK
DEPARTMENT OF DESIGN + CONSTRUCTION
DIVISION OF INFRASTRUCTURE
BUREAU OF DESIGN

LOCATION C - 2
UTILITY PLAN

INSTALLATION OF DISTRIBUTION WATER MAINS
BOROUGH OF THE BRONX

PROJECT ID:QED1063AC | DATE: 09/12/2024 | SHEET 24 OF 27 | UP6 / UP18

IN-HOUSE DESIGN

PROJECT ID: QED1063AC

UTILITY DRAWING LIST

GENERAL NOTES:

DRAWING TITLE	DRAWING NO.	NO. OF SHEETS
GENERAL NOTES AND CONDITIONS FOR UTILITY WORK	JB-U1	1

CON EDISON (BRONX):

DRAWING TITLE	DRAWING NO.	NO. OF SHEETS
GAS MAINS AND SERVICE PLATE	JB-U2 TO JB-U15	14

CON EDISON (QUEENS):

DRAWING TITLE	DRAWING NO.	NO. OF SHEETS
OVERHEAD ELECTRICAL CONDITIONS REPORT	JB-U16 TO JB-U21	6
CONDUIT AND DUCT OCCUPANCY PLATE	JB-U22 TO JB-U27	6
	JB-U28 TO JB-U37	10

VERIZON/ECS:

DRAWING TITLE	DRAWING NO.	NO. OF SHEETS
EXISTING FACILITIES PLAN	JB-U38 TO JB-U61	24
OVERHEAD MAIN LINES PLANS	JB-U62 TO JB-U79	18

ALTICE:

DRAWING TITLE	DRAWING NO.	
UTILITY PLANS	JB-U80 TO JB-U82	3

TOTAL NUMBER OF DRAWINGS ATTACHED IS (82)

UI - PAGES UTILITY INTERFERENCES SECTION

NOTICE

THE PAGES CONTAINED IN THIS SECTION (UI - PAGES) REPRESENT ADDITIONAL CONTRACT REQUIREMENTS APPLYING TO WORK PERFORMED IN THE PRESENCE OF PRIVATELY OWNED UTILITY FACILITIES.

(NO TEXT ON THIS PAGE)

UTILITY INTERFERENCES (UI) SECTION

DATED: **October 09, 2025**

1. The Contractor shall be responsible for compliance with all the provisions of the following Sections and Schedules, which are hereby made a part of the original contract documents:

   A. "UI SECTION: Additional Contract Requirements Applying to Work Performed in the Presence of Privately Owned Utility Facilities" (Pages UI-3).

   B. Schedule U-1 (Page UI-13).

   C. Schedule U-2 CHARTER SPECTRUM Utility (Pages UI-14 through UI-16).

   D. Schedule U-3 Page UI-17 (as per the Private Utilities reference document for UI SECTION called "CET SPECIFICATIONS AND SKETCHES", dated November 2010), in this Section CHARTER UI-Pages;18 and19.

   E. Utility drawings (0 Sheet) consisting of:

2. Each facility operator shall provide inspectors at the work site to inspect methods of interference work, verify quantities and items of Utility Work, and coordinate all phases of the facility operator operations.

3. In addition, the following statements are made to provide clarification of various Paragraphs under UI Section:

   A. UI Section, Paragraph 4, requires the Contractor to immediately commence negotiations with each Company for an Interference Agreement under which the Company will compensate the Contractor for any Interference Work which the Company does not elect to perform with its own forces or by specialty contractors retained by the Company. Thus the Contractor is on notice that its work under the Contract may be affected by Interference Work performed by (a) the Contractor pursuant to a separate Interference Agreement with the Company, (b) the Company, or (c) partly by each.

   B. UI Section, Paragraph 2, informs the Contractor that the duration of the Contract as shown in Schedule A includes the time which may be necessary for the Contractor to perform the necessary Interference Work.

C. The Contractor is hereby informed that the duration of the Contract as shown in Schedule A includes the time which may be necessary for the Company to perform whatever portion of the Interference Work which the Company elects to perform with its own forces or by specialty contractors retained by the Company.

D. UI Section informs the Contractor that the City has entered into an Interference Agreement with the Companies regarding interferences to the City work in this Contract created by the facilities owned and/or operated by such Companies. Pursuant to this Section, a sample of the Utility Agreement letter as executed by the Companies is annexed on page UI-12, as an Exhibit to the Contract. Signed copies of those Utility Agreement letters are on file with New York City Department of Design and Construction (DDC).

E. The City has no contract with any of the Companies for work on or adjacent to the site of work under this Contract, and the Companies are not "Other Contractors" as defined for the purposes of this Contract. The Contractor is reminded, however, that pursuant to UI Section, Paragraph 4, the City will not compensate the Contractor for any direct and/or indirect costs related to Interference Work, regardless of whether such Interference Work is covered by an Interference Agreement between the Contractor and the Company or is performed by the Company using its own forces or by specialty contractors retained by the Company.

F. UI Section, Paragraph 14, provides that the provisions of UI Section are material provisions of the Contract and that the Contractor's failure to comply with the procedures set forth in UI Section are sufficient for the Commissioner to declare the Contractor in default pursuant to Article 48 of the Contract.

Pursuant to this Section, the Contractor is informed that the Performance Bond required of the Contractor pursuant to the Contract is not deemed to guarantee performance of any of the Interference Work.

Utility Interferences Section - Additional Contract Requirements Applicable to Work Performed in the Presence of Privately Owned Utility Facilities

The Contractor is hereby notified that pursuant to the law and franchise agreements issued by the City, certain private utility and public service companies named in Schedule U-1 ("the Companies") own and/or operate surface and/or subsurface facilities within the limits of this contract. The existence of these facilities impacts the productivity of the City work called for in the contract. In order to improve coordination of the City construction with the private utility facilities owned and/or operated by the Companies named in Schedule U-1, Article 1.06.30 of the Standard Highway Specifications of the New York City Department of Transportation, Dated August 1, 2015; and/or Articles 10.15 through 10.18 of the Standard Sewer and Water Main Specifications of the New York City Department of Environmental Protection, Dated July 1, 2014; as applicable, are amended and will be implemented as follows:

1. ***Pre-engineering:***

The anticipated scopes of private utility facilities interferences and anticipated work items and specifications are included in this contract. The locations of these interferences are indicated on the plans and/or listed in the specifications for this contract, and a schedule of estimated quantities by type of interference expected to be encountered within the limits of this project area have been listed on Schedule U-2. In addition, in Schedule U-3 the Companies have provided standard details and methods for supporting, protecting, relocating, and/or working around their facilities when they are in interference with City contract work.

2. ***Means and methods for City work***:

a) The Contractor is hereby notified that the utility interferences identified on the plans and/or listed in the Specifications to be known conditions which may impact the performance of, and/or interferes with, City work. The Contractor will be required to perform such utility work as directed by the Resident Engineer in order to clear all utility interferences from the project site as required for satisfactory completion of City work within specified contract schedule.

b) In areas serviced by overhead lines on poles carrying electric, telecommunication and cable system, the Contractor understands and by bidding for this contract agrees that he/she has reviewed the schedule of estimated quantities by type of interference expected to be encountered within the limits of this project and that he/she will be required to perform the public work in the presence of these overhead lines and appurtenances located in areas adjacent and/or within the project area. As a consequence he/she will select means and method of construction appropriate to maintain the safety clearances required or as permitted by contract specifications (e.g. "CET 350 – Overhead Accommodation Protection of Overhead Facilities, Poles, and Appurtenances") in order to avoid damaging the insulation or shielding of these lines and also to prevent knocking

them down. The duration of the contract as shown in Schedule A thus includes the time which may be necessary for the Contractor to remove, repair, protect, support, shift, temporarily remove and replace, work around and/or work in the presence of the Companies' facilities ("Interference Work") as described on the plans and/or specifications of the contract during the progress of the City work.

3. Field inspection prior to construction:

Prior to the start of any contract work in areas serviced by overhead electric lines , and after the award to the apparent low bidder for this contract, the Contractor must request a field walk of the project area along with the operator of the overhead electrical facilities and the DDC Engineer-In-Charge. At that time the facility operator, pursuant to contract specification (e.g. "CET 350 – Overhead Accommodation Protection of Overhead Facilities, Poles, and Appurtenances") will confirm the type and condition of the overhead electrical lines and the sufficiency of their insulating properties with respect to the means and methods proposed by the Contractor. The Contractor must be prepared to describe in enough details his/her proposed means and methods of construction operations in order to anticipate the likelihood that electric lines insulation would be cut or otherwise compromised. Also such details will allow the facility operator to anticipate the need for added insulation and/or shielding of non-insulated lines.

4. Compensation for interference work:

Compensation for Interference Work is a matter of adjustment between the Contractor and each private utility company located within the limits of the project area and whose utility facilities are affected by City contract work. In particular, the City will not compensate the Contractor for any direct and/or indirect costs related to Interference Work, including, but not limited to, delay, lost profit, increased overhead, or any other impact costs which are deemed to be included in cost agreement between the Contractor and private utility company affected by such work. Upon receipt of a Notice of Award from the City, the Contractor shall immediately commence negotiations with each of the Companies concerning the manner in which and the price for which the Contractor, through its own forces or by others hired by it, will perform and be paid by the Company for all necessary Interference Work as defined above that the Company(ies) choose(s) not to perform with its(their) own forces or by specialty Contractors hired by it (them) (as per "Interference Agreement"). Specialty contractors' work is limited to (i) insulation installation and removal, (ii) live gas and steam work, (iii) cleanup and disposal of hazardous materials, (iv) splicing live electrical and telecommunications facilities, and (v) work not within the competence of general construction contractors.

5. Interference Agreement:

a) The Companies have provided estimate of the quantity of each type of interferences expected to be encountered in the contract in Schedule U-2. The parties may negotiate an Interference Agreement in any format or manner they deem fit based on quantities and types of Interferences expected to be encountered on this Contract as stated in Schedule U-2.

b) Furthermore, in Schedule U-3, standard unit work measurement and payment provisions are specified and shall apply only if the Contractor and affected Utility companies enters into a unit price based on an Interference Agreement, otherwise the unit of work measurement, and payment provisions set forth in Schedule U-3 shall not apply. The Contractor shall notify the City upon concluding an Interference Agreement with each of the Companies, which shall be binding and final once concluded.

6. City contract work to continue without Interference Agreement:

If, prior to the start of construction, as directed by the City's Order to work / Notice To Proceed (OTW/ NTP) date any of the Companies and the Contractor have not concluded an Interference Agreement as described above, then the City will issue to private utility company (ies) in a written "48 Hours' notice to Public Corporation" in accordance with the Administrative Code of the City of New York. Construction will then proceed as ordered and the Contractor will be directed by the Resident Engineer (RE) to perform the City work on Time, Material and Equipment basis (T&M) as specified in standard City contract agreement Article 26.2. T&M records will include identification of types of utility facilities interfering with City work, utility facility owners, specifying the nature and quantity of any materials, plant and equipment furnished or used in connection with the performance of such work and crew size, such as: name and number of each worker employed on such work. T&M records will also indicate the hours of active time, standby time and idle time. The Company (ies) and the Contractor will maintain separate records of the actual quantity and cost of labor, materials, and equipment expended, and will provide copies of this information to the other party on a daily basis for reconciliation. These T&M records along with cost evaluations will be submitted daily to the Resident Engineer for review and approval. The total cost of City work will be based on quantity of work performed multiplied by unit price contract bid items. The total interference cost will be calculated as the difference between the total T&M cost and total cost for City work. The Resident Engineer will conduct a monthly reconciliation session of the daily T&M records with the affected Company (ies) and the Contractor. If the Contractor and affected utility companies cannot reconcile their T&M records, by the last day of each month, then the Resident Engineer will submit the approved City's T&M records along with total cost evaluations to the DDC Director of Construction who will review these records and recommend approval and validity certification by the DDC Construction Assistant Commissioner.

a) Copies of the DDC approved and certified T&M records will then be transmitted by the DDC to the Contractor and the utility companies. These certified records may be used by the Contractor for compensation claims against the responsible private facility owners, or may be used by any party as supporting documentation in dispute regarding compensation for performing Interference Work as identified in Schedule U-2. The Contractor will be required to perform City work while invoices are submitted by the Contractor to the utility companies for payment within 30 days, or while compensation disputes between the Contractor and affected company (ies) are submitted to Binding Arbitration process described in Paragraph 10.

b) All issues related to utility work and/or delays due to compensation disputes or claims against utility companies are not allowable as justification for granting contract time extensions or delay claims against the City. The City may assess liquidated damages specified in the contract for net overall delays suffered by City contract work as a result of utility issues, disputes and claims.

c) The standard City contract dispute resolution process specified in Article 27 “Presentation of disputes to Commissioner”, of the standard City contract agreement is not applicable to any disputes related to utility work and/or compensation for such work or claim against utility companies. Utility work issues, disputes and claims may only be submitted to Binding Arbitration process described in Paragraph 10.

d) The Contractor will notify the Resident Engineer when utility capital work not specified in Schedule U-2 and/or for utility work that require the intervention of company utility specialty crews causes excessive contractor’s labor and equipment standby or idleness and, thereby jeopardizing the City project schedule. The Resident Engineer will submit the facts to the DDC Director of Construction who will recommend to the DDC Deputy Commissioner regarding the issuance of a “48 Hours’ notice to Public Corporation” to the concerned utility company as authorized by the New York City Administrative Code Section 19-143 and/or Section 24-521 as applicable.

e) Utility delays caused by utility capital work not listed in Schedule U-2 and/or by unavailability of utility specialty crews cannot be discounted for earning any contractual bonus when such bonus clause is included in a contract. However, if such specified bonus is not earned or is disallowed by the City or if the City assesses specified liquidated damages as a result of such excessive delays, the Contractor may seek damages from the responsible utility company (ies).

7. Extra utility work with Interference Agreement:

If during construction the Contractor encounters utility facilities interferences or utility scope of work that it believes is not covered by the Interference Agreement as described above, then the Contractor shall immediately notify the Company in writing, with a copy to the City, describing the nature and location of the extra work in question. The Company then has five (5) business days to investigate the conditions and then:

a) Advise the Contractor and the City in writing that no interference with its facilities exists at the location in question, and hence that the Contractor may proceed with City work without providing for any impact from Company facilities;

b) Advise the Contractor and the City in writing that the Interference Agreement negotiated pursuant to Paragraph 6, above, provides for the scope of work encountered, specifying the exact unit items and/or terms of the agreement that cover the work;

c) Advise the Contractor and the City in writing that it intends to perform the necessary utility work with company forces or with its own contractor including, but not limited to, relocating its facility out of the way of the proposed City work. In this case, the Company shall provide a written schedule for the performance of the utility work it proposes to perform, which shall be subject to approval by the City based on its impact to the Contractor's currently approved progress schedule. Upon approval of the Company's schedule by the City, the Contractor shall provide access to the worksite to the Company and/or any contractors hired by it to perform this utility work. If necessary, the City may grant a contract time extension for delays caused by the performance of such utility work by the company.

d) Reasonably specify in writing the scope of work to be performed by the Contractor on behalf of the Company that is not covered under the Interference Agreement negotiated pursuant to Paragraph 6, including, but not limited to, relocating, supporting, and/or protecting the Company's facilities, and/or shifting the City facility if approved by the Resident Engineer, and/or otherwise changing its operations to work in the presence of the Company's facilities. Should the Company elect this option, it must adequately define and provide an initial price offer for the work required to be performed.

8. Means and Methods for utility work:

Upon receipt of the Company's determination pursuant to Paragraphs 7.b, or 7.d, above, the Contractor shall determine reasonable means and methods of performing the work defined by the Company. These means and methods are subject to approval of the Company, which shall not be unreasonably withheld. If, however, the Company objects to the Contractor's proposed means and methods then it shall define an alternate method of construction. Upon receipt of the Company's approval or its

proposed alternate method of construction, the Contractor shall commence performance of the work defined by the Company as soon as possible, and shall perform the work in a good, workmanlike, and efficient manner, using the means and methods approved by the Company, in order to permit the City work to proceed in the most expeditious manner possible, but without imposing unreasonable and/or unnecessary costs on the Company. It is expressly understood by all parties that the City's rights pursuant to Article 4 of the Contract apply to Utility Work performed pursuant to this Section.

9. Disputed utility work covered by an interference agreement:

The City Work will continue as described in Paragraph 6 above. In the event of any dispute between the Company (ies) and the Contractor regarding any issue related to the performance of, or payment for, utility work, including, but not limited to, any indirect or impact costs incurred by the Contractor due to the Utility Work and/or to the existence of facilities owned or operated by the Company (ies) on the line of the work. The Company (ies) and the Contractor hereby agree to submit to each other a "Final Offer," in writing, by certified mail. Each party shall then have three business days to consider each other's Final Offer. In the event that neither party accepts the other's Final Offer within those three days, the Company (ies) and the Contractor agree to immediately submit the dispute to binding arbitration as described in Paragraph 10. During the pendency of any arbitration, the Company (ies) and the Contractor shall maintain separate records of the actual quantity and cost of labor, materials, and equipment expended, and to provide copies of this information to the other party on a daily basis for reconciliation. Any and all disagreement with the records maintained and provided by the other, must be documented in writing to all parties. However, these records are solely for the benefit of presentation to the arbitrator, whose decision may not necessarily be based on these records and in any event is final. Both parties should be aware that the City will not confirm or deny the accuracy of any records that is not certified by DDC. While the arbitration is pending, the Company shall pay the Contractor on a monthly basis, based on the price offered by the Company to the Contractor for the performance of the work.

10. Arbitration of utility work:

The arbitration of the issues described above shall be conducted pursuant to the Construction Industry Arbitration Rules of the American Arbitration Association (hereinafter "the Rules" and "AAA") in effect on the date the arbitration is initiated except as set forth herein. The arbitration award shall be final and binding upon the parties to the arbitration and judgment upon the award may be entered in a court having jurisdiction.

a) Once an arbitrator(s) has been appointed by the AAA, the arbitration shall be scheduled as promptly as possible given the arbitrator(s) and the parties' schedules.

b) No later than seven days prior to the first arbitration hearing, Company and the Contractor shall submit to the arbitrator(s), and to each other, a summary of each party's respective position and such other information as is deemed appropriate, along with a copy of each party's Final Offer as specified in Paragraph 9.

c) The arbitration shall be conducted and concluded in two days.

d) On the morning of the first day of the arbitration, the Contractor and/or representatives shall have 3 ½ hrs to make a presentation of its claim to the arbitrator. During its presentation, the Contractor shall not be permitted to produce any documents or cost records which have not already been provided to the Company. The Contractor shall be permitted to produce any analysis or description of its claim which has been prepared for the purpose of its presentation.

e) Company and/or its representatives shall have two hours to ask the Contractor questions about its claim and its presentation. Thereafter the arbitrator(s) shall have two hours to ask the Contractor questions about its claim and its presentation.

f) On the morning of the second day of the arbitration, Company and/or its representatives shall have 3 ½ hours to make a presentation of its claim to the arbitrator. During its presentation, the Company shall not be permitted to produce any documents or cost records which have not already been provided to the Contractor. The Company shall be permitted to produce any analysis or description of its claim which has been prepared for the purpose of its presentation.

g) The Contractor and/or its representatives shall have two hours to ask Company questions about its claim and its presentation. Thereafter the arbitrator(s) shall have two hours to ask Company questions about its claim and its presentation.

h) Subject to the above time limitations, the arbitrator(s) may conduct the arbitration in such manner as the arbitrator(s) deems reasonable.

i) The arbitrator(s) shall then have one week to select in writing, as the arbitrator ('s) award, that party's Final Offer which appears to be more reasonable, based on the presentations at the arbitration hearings.

j) The arbitrator shall have no discretion to grant an award other than one of the two Final Offers submitted by the parties.

k) Any award for work that has already been performed shall be paid on the 7th day after receipt of the arbitrator's decision, or on the 30th day after completion of the work, whichever is later. Payment for work not yet completed at the time of the arbitrator's decision shall be paid within 30 days of completion of work. Interest shall accrue from the date payment is due at the rate of 9% per annum. Either

party may cause judgment to be entered in accordance with the arbitrator(s) decision in a court in the State of New York, County of New York.

l) The arbitrator's fees and any other costs of the arbitration shall be initially shared equally by Company and the Contractor. The non-prevailing party shall then pay all arbitrator's fees and costs of the arbitration and shall reimburse the prevailing party for its share of such fees and costs theretofore paid.

m) The parties may, at any time, settle any matter submitted to arbitration.

11. Order-out waiver:

The Contractor and all subcontractors hired by it, if an Interference Agreement is executed as specified between the concerned parties, agree to waive any rights they may have, if any, under law, contract or otherwise to compel the City to assert any right the City may have, including the issuance of any directives required under the New York City Administrative Code, Section 19-143 and Section 24-521, to require any or all of the Companies to maintain, repair, replace, protect, support, shift, alter, relocate, and/or remove utility facilities in connection with the work to be performed under this contract. However, nothing in this Section shall preclude the City from exercising its rights under the Law to issue such a directive to the Company.

12. Cost of insurance:

Each of the named Companies, at their option and if an Interference Agreement is executed as specified between the concerned parties, may be named as an additional insured on all insurance policies required to be maintained under this contract. In the event that a Company opts to be so named as an additional insured, the actual incremental cost, if any, to the Contractor of providing such insurance coverage shall be borne by that Company. The Contractor shall provide a written statement from its insurance provider documenting the actual cost of this added coverage to the Company. Under no circumstances shall the cost of insurance coverage on behalf of any Company be borne by the City. Nothing in this paragraph shall be interpreted to imply the City's acceptance of any additional responsibility or liability for any matter related to the performance of Utility Work. In particular, the Company and the Contractor bear joint and full responsibility to ensure that any Utility Work performed by the Contractor is in compliance with all applicable government and Company regulations.

13. Cost of utility interference work:

The Companies, by virtue of participating in design alignment meetings and submitting their scope of Utility Interferences Work to the City, have agreed to perform their obligations described in this Section. It is expressly understood that the cost of Utility Work or any delays caused by such Utility Work shall not be a charge against the City, but shall be a matter for adjustment between the Contractor and the Company or Companies concerned. The City and the Contractor agree that the Companies are

third party beneficiaries of this Section of the contract, if an Interference Agreement is executed between the Contractor and utility company (ies). The provisions of this Section shall govern in all cases where Company property interferes with or is about to be disturbed by the City work, notwithstanding any other provision of the Contract, except for Natural Gas transmission/distribution facilities covered subject to the Gas Facility Cost Allocation Act (GFCAA) and covered separately in this contract.

14. Default declaration:

The Contractor agrees that the provisions of this Section are material provisions of the contract, and that the Contractor's failure to comply with the procedures set forth above are sufficient for the Commissioner to declare the Contractor in default pursuant to Article 48 of the Contract.

15. NYS Labor Law:

The Contractor is hereby advised that New York State Labor Law and/or, Davis-Bacon Act if federally funded, applies to public work. The work described in this Utility Interferences Section of the contract performed by utility company (ies) with their own forces or vendors hired by such company (ies) is not public work.

16. Facility operators:

The insurance requirements in Paragraph 12 of this UI Section apply to: (i) additional Companies, if any, who were not named in Schedule "A" but which have executed an Interference Agreement with the Contractor for utility work; and (ii) additional coverage, if any, paid for by Utility Companies whose utility facilities are located within the project limits, that they may require for the utility work pursuant to an Interference Agreement between the Contractor and such utility company (ies).

(End of Section)

"STANDARD UTILITY LETTER OF AGREEMENT"

(Name)
Deputy Commissioner, Infrastructure Division
Department of Design and Construction
30-30 Thomson Avenue
Long Island City, NY 11101

RE: City Work Performed in the Presence of Private Utility Facilities
Project No: _____

Dear (Name):

This letter is to certify that _____, has requested the inclusion of the attached "Utility Interferences (UI) Section: Additional contract requirements applying to work performed in the presence of privately owned utility." The company agrees to abide by the terms of this UI Section at the company's own expenses due to their facilities interferences with the Public work.

Sincerely,

_____
By: Authorized Company Representative

_____
Title

NOTARY PUBLIC

CERTIFIED AS TO FORM
AND LEGAL AUTHORITY:

By:_____

SCHEDULE U-1

LISTING OF COMPANY (IES) NAMED FOR THIS CONTRACT

COMPANY NAME	CONTACT NAME	CONTACT TELEPHONE & E.MAIL	
CHARTER SPECTRUM	JOHN PIAZZA	718-888-4261	JOHN.PIAZZA@charter.com

SCHEDULE U-2

ENGINEER'S ESTIMATE OF QUANTITIES AND TYPES OF INTERFERENCE
CHARTER/ SPECTRUM
QED1063AC
INSTALLATION OF DISTRIBUTION WATER MAINS
Borough of Queens

CET ITEM	DESCRIPTION	UNITS	ESTIMATED QUANTITY
CET108 1	UTILITIES CROSSING TRENCH FOR WATER MAIN UP TO AND INCLUDING 12" DIAM.	EA	1
CET 300.1	SPECIAL CARE EXCAVATION AND BACKFILLING IN TRENCH LESS THAN 5' DEEP	CY	1
CET 350	OVERHEAD ACCOMMODATION, PROTECTION OF OVERHEAD FACILITIES, POLES & APPURTENANCES	LS	1

CHARTER/SPECTRUM
SUPPORT & PROTECTION
QED1063AC
Installation of Distribution Water Mains
Borough of Queens

CET 108.1	**UTILITIES CROSSING TRENCH FOR WATER MAIN UP TO AND INCLUDING 12" DIAMETER** At the following locations: NEC of Maple Ave and College Point Blvd	**EA** 1
	Total quantity for 108.1	
CET 300.1	**SPECIAL CARE EXCAVATION AND BACKFILLING IN TRENCH LESS THAN 5' DEEP** At the following locations: NEC of Maple Ave and College Point Blvd	**CY** 1
	Total quantity for 300.1	
CET 350	**OVERHEAD ACCOMMODATION, PROTECTION OF OVERHEAD FACILITIES, POLES AND APPURTENANCES** AS ENCOUNTERED:	**LS** 1

SCHEDULE U-3

(NO TEXT IN THIS SECTION)

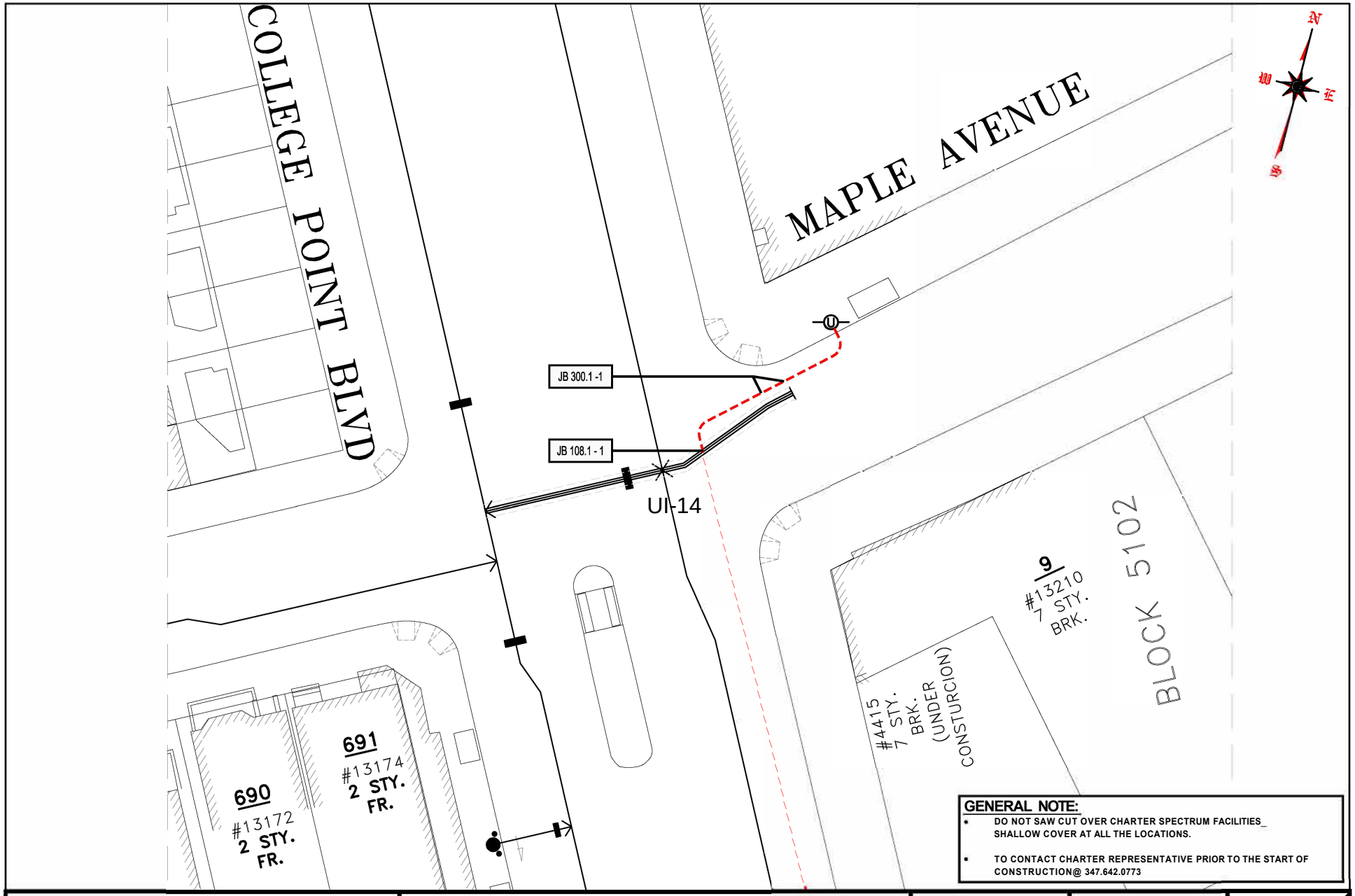

GENERAL NOTE:

- DO NOT SAW CUT OVER CHARTER SPECTRUM FACILITIES_ SHALLOW COVER AT ALL THE LOCATIONS.
- TO CONTACT CHARTER REPRESENTATIVE PRIOR TO THE START OF CONSTRUCTION@ 347.642.0773

Charter Spectrum

PROJECTID_NAME QED1063AC_ INSTALLATION OF DISTRIBUTION WATER MAINS - SEVERAL LOCATIONS	SURVEYED BY: KH	DATE: 10/22/2024	SHEET#	
	DRAFTED BY: AJB	DATE: 10/22/2024	1	
PROJECTITI1.E CHARTER/SPECTRUM- INTERFERENCE DRAWING(S)	REVIEWED BY: AJB	DATE: 10/22/2024		1
	DWGSCALE 1" = 30'	REVISION(S) NO:		

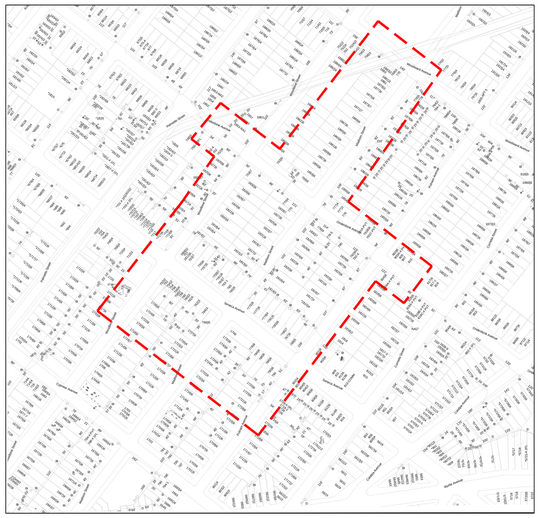

LOCATION PLAN A
@ QUEENS COMMUNITY BOARD NO. 5

LOCATION PLAN A
@ QUEENS COMMUNITY BOARD NO. 12

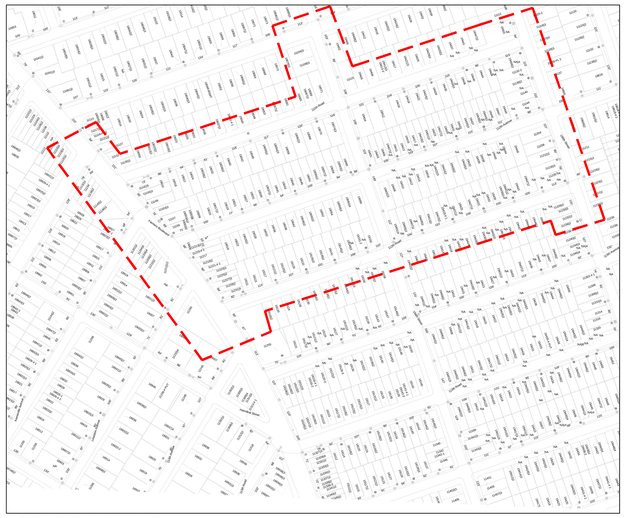

LOCATION PLAN F
@ QUEENS COMMUNITY BOARD NO. 12

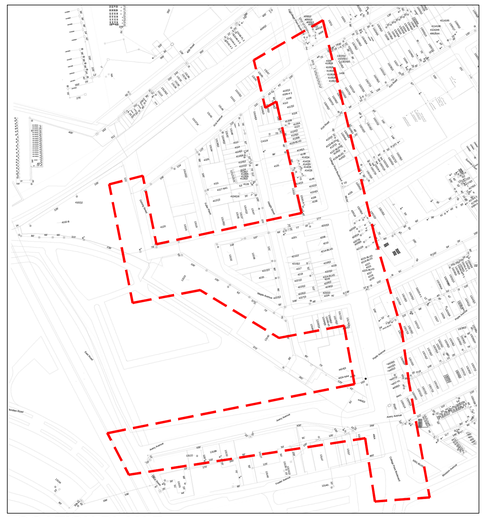

LOCATION PLAN E
@ QUEENS COMMUNITY BOARD NO. 7

LEGENDS:

- JUNCTION POLE
- EXISTING CATV POLES
- EXISTING TELEPHONE POLES
- EXISTING ANCHOR/ DOWNGUY
- EXISTING CABLE IN CONDUIT(C.IC.) DO NOT SAWCUT AT THESE LOCATIONS
- EXISTING PVC CABLE
- EXISTING CHARTER/ SPECTRUM OVERHEAD MAINLINE
- EXISTING CHARTER/ SPECTRUM OVERHEAD MAINLINE
- EXISTING CHARTER/ SPECTRUM SIDEWALK VAULT
- EXISTING CHARTER/ SPECTRUM SIDEWALK PEDESTAL

OVERHEAD GENERAL NOTES:

- ALL CHARTER SPECTRUM OVERHEAD LINES TO REMAIN IN PLACE AND ACTIVE DURING ALL PHASES OF THE WORK OPERATIONS EXCEPT WHEN THE SERVICE WIRES ARE INTERFERING WITH PILE DRIVING OPERATIONS.
- CONTRACTOR TO COORDINATE WITH CHARTER SPECTRUM REPRESENTATIVES FOR REMOVAL AND RECONNECTING OF SERVICE WIRES DURING PILE DRIVING OPERATIONS AND PROVIDE TWO WEEKS NOTICE.
- CONTRACTOR TO MAINTAIN A SAFE OPERATION DISTANCE IN ORDER TO PROTECT AND MAINTAIN CHARTER SPECTRUM OVERHEAD LINES.
- CHARTER SPECTRUM POLES TO BE SUPPORTED AS PER SKETCH JB351 IN CONSULTATION WITH CHARTER SPECTRUM REPRESENTATIVE.

Charter Spectrum

FOR REFERENCE ONLY

CHARTER/ SPECTRUM SYSTEM PRINT_

PROJECT ID_ NAME
QED1063AC: INSTALLATION OF DISTRIBUTION WATER MAINS IN SEVERAL LOCATIONS IN QUEENS AND BRONX

SIZE 30 X 42	DWG NO. 1	DATE 10/18/2024	
SCALE NTS	SHEET 1 OF 1		

END OF SECTION UI-PAGES

THE SECTION UI-PAGES CONSIST OF TWENTY(20) PAGES

ZERO (0) SHEET OF PRIVATE UTILITY DRAWINGS

ARE ATTACHED TO THE CONTRACT PLANS

Department of Design and Construction

DIVISION OF INFRASTRUCTURE
BUREAU OF DESIGN

VOLUME 3 OF 3

PROJECT ID: QED1063AC
INSTALLATION OF DISTRIBUTION WATER MAINS

Together With All Work Incidental Thereto

BOROUGH OF QUEENS AND THE BRONX
CITY OF NEW YORK

_____
Contractor

Dated_____, **20**_____